1987

1987

VOLUME 31
BOOK 41
NOVEMBER 1986

D.A.T.A.BOOK®

ELECTRONIC INFORMATION SERIES

DIODE

EDITION 54

D.A.T.A

DIODE EDITION 54

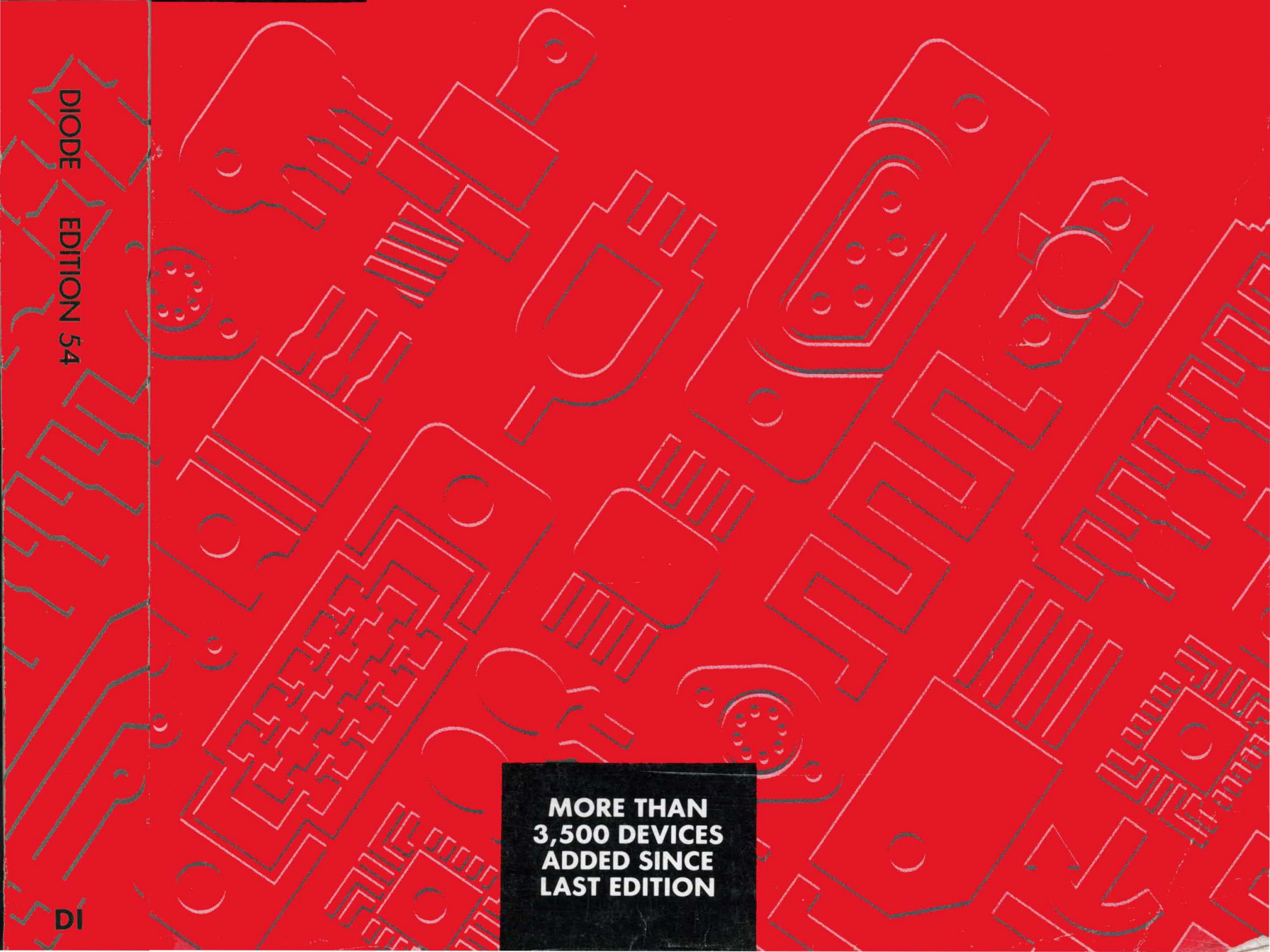

MORE THAN
3,500 DEVICES
ADDED SINCE
LAST EDITION

DI

D.A.T.A.

D.A.T.A.,INC.

A Cordura Company
9889 Willow Creek Rd. P.O. Box 26875
San Diego, California 92126
Phone – (619) 578-7600
Telex – 910-530606
Mailbox – 62773091
TOLL-FREE (800) 854-7030
In CA (800) 421-0159

PUBLISHER
Laurence E. Laumann, *President*
Virginia Sorrells, *Administrative Assistant*

EDITORIAL & PRODUCT DEVELOPMENT
Steve d'Adolf, *Technical Director*
Jim Fitzgerald, *Product Development Coordinator*
Karen E. Wilcox, *Editorial Production Manager*
Suzann M. Anderson, *Manufacturers Service Representative*

ENGINEERING EDITORS
James Mastt, *Sr. Editor*
Paul R. Magin, *QA Editor*
Michael S. Bridges, *Database Production Coordinator*
William T. Dennison
Steven H. Rohrick
Frank E. Winsor
Minh C. Dao
Stephen P. Rogers
Douglas D. Gieseke
Tim McKinley
Sultan M. Ashraf

PRODUCTION EDITORS
Mary Herrin, *Coordinator*
Dixie Wilson
Larisa Botvinik
Margaret Kelder

GRAPHICS
Otto D. Ellison, *Graphics Manager*
Elizabeth A. Victor, *Coordinator*
Eugene King
Michael A. Southard

MARKETING & ADVERTISING
Norris Durham, *Director of Market Development*
Patricia A. Wilson, *Director of Direct Response Marketing*
Karen Castillo, *Marketing Production Coordinator*
Lawrence Barnett, *Direct Marketing Specialist*
Nita Main, *Secretary*
Chuck Hirsch, *Director of Telemarketing*
G. Don Leavell, *Major Accounts Coordinator*
Robert J. Knudsen, *Space Advertising Sales Representative*
Deborah L. Hubbard, *Advertising Production Coordinator*

OPERATIONS
Judy Treitler, *Marketing Operations Manager*
Paulette Jones, *Financial Coordinator*
Phyllis Gosse, *Customer Service*
Maureen Meals, *Customer Service*
Sheree Wrightman, *Customer Service*
Juanita Myers, *Communications Coordinator*

INTERNATIONAL MARKETING
Doug Daniel, *International Sales Manager*
European Office:
D.A.T.A. International, Inc.
Orpin House
Hilders Lane
Edenbridge TN8 6JX
Kent, England
Telex: (851) 95671 EDNMET G

D.A.T.A., Inc., is a subsidiary of CORDURA PUBLICATIONS, INC., 9889 Willow Creek Rd., P.O. Box 26260, San Diego, CA 92126

D.A.T.A.BOOK (USPS 559-390, ISSN 0732-5894) Electronic Information Series is published 50 times per year in the following sequence: 2 in Jan., 7 in Feb., 4 in Mar., 1 in Apr., 3 in May, 5 in Jun., 5 in Jul., 7 in Aug., 5 in Sept., 0 in Oct., 5 in Nov., 6 in Dec., for $3,110.00 (Full U.S. Price) by D.A.T.A. Inc., 9889 Willow Creek Rd., P.O. Box 26875, San Diego, CA 92126. Second-class postage paid at San Diego, CA.

POSTMASTER: Send address changes to D.A.T.A., Inc., P.O. Box 26875, San Diego, CA 92126.

COPYRIGHT©1986 by Derivation and Tabulation Associates, Inc., a Cordura Company, all rights reserved. No part of this publication may be transmitted, in any form or by any means, electronic, mechanical, photocopying, recording or otherwise, without the prior written permission of the publisher and corporate officer of CPI. This includes text, tabularized information and illustrations.

Annual Publication

1987 D.A.T.A.BOOK®

ELECTRONIC INFORMATION SERIES
VOLUME 31 – BOOK 41 – NOVEMBER 1986

DIODE

EDITION 54
52,555 TYPES 155 MANUFACTURERS

TABLE OF CONTENTS

	Page
HOW TO USE THIS BOOK	
English	I
German	VII
French	XIII
Spanish	XIX
Japanese	XXV
COMPONENT LOCATOR	XXXI
1. **TYPE NO. CROSS INDEX**	1
2. **VOLTAGE REFERENCE DIODES**	
Single-&-Double-Anode Types, $P_D < 5W$	163
3. **GENERAL-PURPOSE DIODES**	
Devices to 1 A	231
4. **HIGH-SPEED DIODES**	
Including Switching & Fast Recovery Rectifiers	238
5. **GENERAL-PURPOSE RECTIFIERS**	
Devices to 7 kA	274
6. **DIODE ARRAYS & MATRICES**	
Array	314
Matrix	315
7. **TRANSIENT SUPPRESSOR DIODES**	
Including Unipolar & Bipolar Types	316
POWER DEVICES	
8. **STANDARD RECOVERY BRIDGE RECTIFIERS**	
Single Phase	360
Three Phase	372
9. **SCHOTTKY RECTIFIERS**	
Single, & Dual Center-Tapped Diodes	374
10. **VOLTAGE-REGULATOR DIODES**	
$P_D \geq 5$ W	377
11. **HIGH-VOLTAGE RECTIFIERS**	
PIV $\geq$ 1 kV	401
12. **MISCELLANEOUS DIODES**	
Current Regulator/Limiter	434
Logarithmic-Conversion Diode	435
Matched Configuration	435
Noise Generator	435
Schottky-Barrier Diode	436
UHF Detector	439
UHF Mixer	439
Varistor	439
Additional Diode Devices	444
SUPPLEMENTARY SECTIONS	
13. Types With U.S. Military Specifications	429
14. Circuit Drawings	449
15. Outline Drawings	453
MANUFACTURERS PROFILE	635
INTERPRETER – Symbols & Codes Explained	DI1
DRAWING INDEX	DI12
SPECIAL INSERT	
Manufacturers' Sales Offices	SOL1

DISCLAIMER OF WARRANTIES: Although the information contained within this volume has been obtained from sources generally believed to be reliable, no warranty (expressed or implied) can be made as to its accuracy or completeness, nor is any responsibility assumed by the publisher or anyone connected with it for loss or damages suffered through reliance on any information contained in this volume. Specifically, no warranty of merchantability, fitness for a particular purpose or any other warranty is made or to be implied with respect to this volume, and no person has the authority to modify such limitation except in a writing signed by a corporate officer of the publisher. The acceptance of this manual is conditional on the acceptance of this disclaimer. If the buyer does not accept the terms of this disclaimer, return the manual within thirty (30) days and the publisher will refund any money advanced by the buyer toward the purchase of this manual.

EDITORIAL POLICY & PROCEDURES

PURPOSE

This D.A.T.A.BOOK is designed to report comprehensively on what is presently being produced throughout the world in the field of Diode devices. While a publication such as this cannot provide 100% of the information you might need, its primary aims are to facilitate the selection of devices suitable to your technical requirements, and to direct you to the sources of their manufacture.

TECHNICAL DATA ACQUISITION

D.A.T.A. acquires information presented in this D.A.T.A.BOOK with the cooperation of the participating manufacturers who supply us with their latest technical and accessory data. Manufacturers are not charged for the listing of their products. Manufacturers listed include those producing microprocessor chips only, to those producing complete microcomputer systems.

BOOK ORGANIZATION

This D.A.T.A.BOOK defines microprocessor ICs as any microcomputer, microprocessor, or microcontroller that resides on a single chip. This book lists microprocessor devices primarily intended for inclusion in OEM equipment. RAM and ROM devices are listed only if they are family-related to a specific processor; general purpose RAMs and ROMs are listed in the Memory ICs D.A.T.A.BOOK. The remainder of the present work, sections six through nine, are dedicated to system control and support chips.

DRAWINGS

Every effort has been made to include as much information about microprocessors as possible. Included are instruction sets, work structures, CPU architecture and register capability as provided by the manufacturer. Drawings are numbered using the most common generic number and indexed to allow easy cross-reference.

COMPONENT SECTIONS

Electrical, mechanical and environmental characteristics of microprocessors and family-related memory, input/output and support devices, derived from manufacturers' data sheets, are presented in the component portion of the book. Associated logic, block, connection and outline drawings complete the component information data picture. Detailed outline/package data are limited to chip components.

PRICE AND AVAILABILITY

Because of the rapidly-changing and complex nature of this field, current price and delivery information should be obtained direct from the manufacturers. The list of manufacturers and the Local Offices Section in the back of the book will assist you in these measures.

MANUFACTURERS' SPECIFICATIONS

This book includes currently-manufactured components and components soon-to-be available with their major characteristics, drawings and manufacturers. Every effort is made to ensure the accuracy of the entries herein; however, the publisher can not be held responsible nor guarantee against the possibility of error or omission. Only the manufacturers or their authorized representatives can provide you with complete technical details.

GSA APPROVED

D.A.T.A.BOOKS are authorized for purchase under GSA Contract #GS-01F-09833 FSS 76 Part 1 Publications. Write or call for GSA prices.

U.S. POSTAL SERVICE
STATEMENT OF OWNERSHIP, MANAGEMENT, AND CIRCULATION
(required by 39 U.S.C. 3685)

1A. Title of publication: D.A.T.A.BOOK
1B. Publication Number: 559-390
2. Date of filing: October 1, 1986
3. Frequency of issue: 1x Apr., 2x Jan., 3x May, 4x Mar., 5x June, July, Sept., Nov., 6x Dec., 7x Feb., & Aug.
3A. No. of issues published annually: 50
3B. Annual subscription price: $3,110.00
4. Location of known office of publication: 9889 Willow Creek Rd. San Diego, San Diego County, California 92131-1175
5. Location of the headquarters or general business offices of the publishers: 9889 Willow Creek Rd. San Diego, San Diego County, California 92131-1175
6. Names and complete addresses of Publisher, Editor, and Managing Editor:
Publisher – Laurence E. Laumann, P.O. Box 26875, San Diego, California 92126-0875
Editor-Steven d'Adolf, Technical Director, P.O. Box 26875, San Diego, California 92126-0875
Managing Editor-Karen Wilcox, Editorial Production Manager, P.O. Box 26875, San Diego, California 92126-0875
7. Owner: International Thomson Organisation, Inc., 245 Park Ave., New York, New York 10167-0058
8. None
9. N.A.

10. Extent and nature of circulation	Average No. Copies each issue during preceding 12 months	Actual No. Copies of single issue published nearest to filing date
A.	2,388	5,500
B. 1.	292	307
2.	1,416	3,107
C.	1,708	3,414
D.	28	28
E.	1,736	3,442
F. 1.	652	2,058
2.	0	0
G.	2,388	5,500

11. I certify that the statements made by me above are correct and complete.

Laurence E. Laumann
Publisher

2 BASIC WAYS:

	If you know:	And need to know:	Read:
1	Electrical & mechanical Requirements	A type number (Manufacturers' part number)	Explanation 1
2	A type number	The electrical and/or mechanical characteristics or its circuit and outline configuration or who manufactures it or an equivalent type	Explanation 2

EXPLANATION 1

If you know:
The electrical and mechanical requirements (including military):
And need to know:
A suitable type number:
First: Turn to the TABLE OF CONTENTS

a. Select from the Table of Contents the Technical Section corresponding to the known device type.
EXAMPLE: Technical Section 8

TABLE OF CONTENTS — Page

HOW TO USE THIS BOOK
English I
German VII
French XIII
Spanish XIX
Japanese XXV
COMPONENT LOCATOR XXXI
1. **TYPE NO. CROSS INDEX** 1
2. **VOLTAGE REFERENCE DIODES**
Single-&-Double-Anode Types, $P_D < 5W$ 163
3. **GENERAL-PURPOSE DIODES**
Devices to 1 A 231
4. **HIGH-SPEED DIODES**
Including Switching & Fast Recovery Rectifiers 238
5. **GENERAL-PURPOSE RECTIFIERS**
Devices to 7 kA 274
6. **DIODE ARRAYS & MATRICES**
Array 314
Matrix 315
7. **TRANSIENT SUPPRESSOR DIODES**
Including Unipolar & Bipolar Types 316
POWER DEVICES
8. **STANDARD RECOVERY BRIDGE RECTIFIERS**
Single Phase 360
Three Phase 372
9. **SCHOTTKY RECTIFIERS**
Single, & Dual Center-Tapped Diodes 374
10. **VOLTAGE-REGULATOR DIODES**
$P_D \geq 5$ W 377
11. **HIGH-VOLTAGE RECTIFIERS**
PIV $\geq$ 1 kV 401
12. **MISCELLANEOUS DIODES**
Current Regulator/Limiter 434
Logarithmic-Conversion Diode 435
Matched Configuration 435
Noise Generator 435
Schottky-Barrier Diode 436
UHF Detector 439
UHF Mixer 439
Varistor 439
Additional Diode Devices 444
SUPPLEMENTARY SECTIONS
13. Types With U.S. Military Specifications 429
14. Circuit Drawings 449
15. Outline Drawings 453
MANUFACTURERS PROFILE 635
INTERPRETER – Symbols & Codes Explained DI1
DRAWING INDEX DI12
SPECIAL INSERT
Manufacturers' Sales Offices SOL1

b. Turn to that section. Locate the type number that is in general agreement with your requirements. EXAMPLE SL1505HE. Because of the sequencing, similar types will appear together. Notice the sequencing parameters in top right corner of each page.

8. STANDARD RECOVERY BRIDGE RECTIFIERS

IN ORDER OF: (1) IO MAX (2) PIV (3) @ TEMP & (4) TYPE NUMBER

LINE No.	4 TYPE NUMBER	2 PIV (V)	MAX AVG FWD DC CURRENT 1 Io MAX (A)	3 @ TEMP (°C)	MAX RATING SURGE CURR PEAK 1 Cy (A)	PULSE WIDTH (s)	MAX. TEMP (°C)	MAT	DRAWING No.
1▼	MP805G	50	8.0	75C	200	8.3m	150	Si	C188e
2	8SB050	50	8.0	80	300	8.3m	150	Si	C216d
3	KBU8A	50	8.0	100C	300	8.3m	150J	Si	M1285
4	BR81	100	8.0	40A	250	8.0m	150S	Si	C219
5	BR81F	100	8.0	50A	250		125A	Si	C219
6	BR81G	100	8.0	50A	250		125A	Si	C219
7▼	DB801T	100	8.0	50A	125	16m	125	Si	M1341
8▼	DB801W	100	8.0	50A	125	16m	125	Si	C219a
9	KBPC801	100	8.0	50C	125	8.3m	125J	Si	C219a†
10	MDA970A2	100	8.0	55C	100		150J	Si△	M1101
11	MB81	100	8.0	75A	25		150	Si	C219j
12	MB81G	100	8.0	75A	125		175	Si	C219j
13▼	MP81	100	8.0	75	200	8.3m	125	Si	C188e
14▼	MP81G	100	8.0	75C	200	8.3m	150	Si	C188e
15	8SB100	100	8.0	80	300	8.3m	150	Si	C216d
16	KBU8B	100	8.0	100C	300	8.3m	150J	Si	M1285
17	BR82	200	8.0	40A	250	8.0m	150S	Si	C219
18	BR82F	200	8.0	50A	250		125A	Si	C219

LINE No.	4 TYPE NUMBER	2 PIV (V)	MAX AVG FWD DC CURRENT 1 Io MAX (A)	3 @ TEMP (°C)	MAX RATING SURGE CURR PEAK 1 Cy (A)	PULSE WIDTH (s)	MAX. TEMP (°C)	MAT	DRAWING No.
111	S10A05FR*	50	10	55C	100		150	Si	M1034a
112	SCBH05F*	50	10	55	80		150	Si	C216h
113	SDA165A	50	10	55C	150		125	Si	C216c
114	SDA267A	50	10	55C	125		150C	Si	C216h
115♦	SDA304A	50	10	55C	125	8.3m	150	Si	C218e
116	VJ048X*	50	10	60C	75	8.3m	150J	Si	C216d
117	100JB05L	50	10	65C	130		150A	Si	C218c
118	MB1005	50	10	75H	150		150	Si	C219j
119	MB1005G	50	10	75H	150		175	Si	C219j
120▼	MP1005G	50	10	75C	200	8.3m	150	Si	C188e
121	10SB050	50	10	80	300	8.3m	150	Si	C216d
122	10TB050	50	10	80	400	8.3m	150	Si	C230a
123	dc10.5	50	10.0	80C	125		150A	Si	M1196
124	VJ048*	50	10	80C	100	8.3m	150J	Si	C216d
125	SL1505HE	50	10	100C	65		150A	Si	M1243
126	K850-1	100	10		300			Si	C188f
127▼	SRM10A	100	10					Si	
128	TJ118-1	100	10		300			Si	C224j

Second: Turn to the TYPE NO. CROSS INDEX Section.

a. Find your selected type number SL1505HE
b. Note manufacturers' code(s) to the right of device number. EXAMPLE: SEN
c. Note page and line number. EXAMPLE: 367-125

1. TYPE No. CROSS INDEX

IN TYPE NUMBER SEQUENCE

TYPE No.	MFRS	Pg&Line	TYPE No.	MFRS	Pg&Line	TYPE No.	MFRS	Pg&Line	TYPE No.	MFRS	Pg&Line	TYPE No.	MFRS	Pg&Line
SKN26/16	♦SEKG	412 -125	SKR2M240/08	♦SEKG	309 - 11	SKXA150M	♦SEKG	433 -198	SLC64A	♦SCN	353 - 96	SLD1.5TS	♦SOD	411 - 47
SKN45/02	♦SEKG	302 -164	SKR2M240/10	♦SEKG	404 -134	SKXA150N	♦SEKG	433 -199	SLC70	♦SCN	353 - 97	SLD1.5U	♦SOD	411 - 53
SKN45/04	♦SEKG	302 -200	SKR2M240/12	♦SEKG	408 - 8	SKXA75000	♦SEKG	433 -120	SLC70A	♦SCN	353 - 98	SLD1.5V	♦SOD	411 - 48
SKN45/08	♦SEKG	303 - 23	SKR3F2/10	♦SEKG	261 -124	SL8	CODI	425 -219	SLC75	♦SCN	353 - 99	SLD1.6S	♦SOD	412 - 23
SKN45/12	♦SEKG	407 - 51	SKR3F2/12	♦SEKG	261 -155	SL10	CODI	427 - 22	SLC75A	♦SCN	353 -100	SLD1.8T	♦SOD	413 -205
SKN45/14	♦SEKG	409 -163	SKR3F20/06	♦SEKG	260 -212	SL15	CODI	429 - 24	SLC80	♦SCN	353 -101	SLD1.8TS	♦SOD	413 -206
SKN45/16	♦SEKG	412 -151	SKR3F20/08	♦SEKG	261 - 67	SL20	CODI	430 -116	SLC80A	♦SCN	353 -102	SLD2	♦SOD	415 - 56
SKN46/02	♦SEKG	302 -165	SKR3F20/10	♦SEKG	261 -125	SL25	CODI	431 - 90	SLC90	♦SCN	353 -103	SLD2S	♦SOD	415 - 21
SKN46/04	♦SEKG	302 -201	SKR3F20/12	♦SEKG	261 -126	SL30	CODI	432 - 33	SLC90A	♦SCN	353 -104	SLD2U	♦SOD	415 - 27
SKN46/08	♦SEKG	303 - 24	SKR4F20/02	♦SEKG	239 - 91	SL45	CODI	432 -216	SLC100	♦SCN	353 -105	SLD2V	♦SOD	415 - 22
SKN46/12	♦SEKG	407 - 52	SKR4F20/04	♦SEKG	239 -185	SL1505HE	♦SEN	367 -125	SLC100A	♦SCN	353 -106	SLD2.4S	♦SOD	417 - 1
SKN46/14	♦SEKG	409 -164	SKR4F20/06	♦SEKG	240 - 38	SL1510FR	♦SEN	368 -122	SLC110	♦SCN	353 -107	SLD2.4T	♦SOD	417 - 2
SKN46/16	♦SEKG	412 -152	SKR4F40/02	♦SEKG	239 - 92	SL1510HE	♦SEN	367 -158	SLC110A	♦SCN	353 -108	SLD2.4TS	♦SOD	417 - 3
SKN70/02	♦SEKG	305 -163	SKR4F40/04	♦SEKG	239 -186	SL1515HE	♦SEN	367 -160	SLC120	♦SCN	353 -109	SLD2.4V	♦SOD	417 - 4
SKN70/04	♦SEKG	305 -167	SKR4F40/06	♦SEKG	240 - 39	SL1520	♦SEN	369 - 25	SLC120A	♦SCN	353 -110	SLD2.8S	♦SOD	418 -161

d. Turn to the MANUFACTURERS' CODES, & NAMES section
e. Locate manufacturers' code and name. EXAMPLE: SEN

MANUFACTURERS' CODES & NAMES

D.A.T.A. MFRS.' CODE		MANUFACTURERS
IMTM		Industria Mexicana Toshiba
INC		International Components Corp.
INL		Intersil, Inc.
INR		International Rectifier Corp.
INRI		International Rectifier Corp.
INRJ		International Rectifier Corp.
ITTG	*	ITT Semiconductors Intermetall
KSI	*	Knox Semiconductor, Inc.
LAM		Lambda Semiconductors
LTE		Lansdale Transistor & Electronics,
SCN	*	Semicon Components, Inc.
SDI		SDI, Inc.
SEKG	*	Semikron Int'l, Inc.
SELI		Semiconductors, Ltd.
SEN		Sensitron Semiconductor, Div.
SES	*	Semitronics Corp.
SET	*	Semtech Corp.
SGSI		SGS-ATES Componenti Elet. SPA
SHEJ		Shindengen Elect. Mfg. Co., Ltd.
SIEG		Siemens Aktiengesellschaft

EXPLANATION 2

If you know:
The type number
And need to know:
The electrical characteristics:
First:
Turn to the TYPE NUMBER CROSS INDEX and find your type number.

a. Note the page and line number beside your Type. EXAMPLE: 367-125

1. TYPE No. CROSS INDEX

IN TYPE NUMBER SEQUENCE

TYPE No.	MFRS	Pg&Line	TYPE No.	MFRS	Pg&Line	TYPE No.	MFRS	Pg&Line	TYPE No.	MFRS	Pg&Line	TYPE No.	MFRS	Pg&Line
SKN26/16	♦SEKG	412 -125	SKR2M240/08	♦SEKG	309 - 81	SKXA150M	♦SEKG	433 -198	SLC64A	♦SCN	353 - 96	SLD1.5TS	♦SOD	411 - 47
SKN45/02	♦SEKG	302 -164	SKR2M240/10	♦SEKG	404 -134	SKXA150N	♦SEKG	433 -199	SLC70	♦SCN	353 - 97	SLD1.5U	♦SOD	411 - 53
SKN45/04	♦SEKG	302 -200	SKR2M240/12	♦SEKG	408 - 8	SKXA75000	♦SEKG	433 -120	SLC70A	♦SCN	353 - 98	SLD1.5V	♦SOD	411 - 48
SKN45/08	♦SEKG	303 - 23	SKR3F2/10	♦SEKG	261 -124	SL8	CODI	425 -219	SLC75	♦SCN	353 - 99	SLD1.6S	♦SOD	412 - 23
SKN45/12	♦SEKG	407 - 51	SKR3F2/12	♦SEKG	261 -155	SL10	CODI	427 - 22	SLC75A	♦SCN	353 -100	SLD1.8T	♦SOD	413 -205
SKN45/14	♦SEKG	409 -163	SKR3F20/06	♦SEKG	260 -212	SL15	CODI	429 - 24	SLC80	♦SCN	353 -101	SLD1.8TS	♦SOD	413 -206
SKN45/16	♦SEKG	412 -151	SKR3F20/08	♦SEKG	261 - 67	SL20	CODI	430 -116	SLC80A	♦SCN	353 -102	SLD2	♦SOD	415 - 56
SKN46/02	♦SEKG	302 -165	SKR3F20/10	♦SEKG	261 -125	SL25	CODI	431 - 90	SLC90	♦SCN	353 -103	SLD2S	♦SOD	415 - 21
SKN46/04	♦SEKG	302 -201	SKR3F20/12	♦SEKG	261 -126	SL30	CODI	432 - 33	SLC90A	♦SCN	353 -104	SLD2U	♦SOD	415 - 27
SKN46/08	♦SEKG	303 - 24	SKR4F20/02	♦SEKG	239 - 91	SL45	CODI	432 -216	[illegible]00	♦SCN	353 -105	SLD2V	♦SOD	415 - 22
SKN46/12	♦SEKG	407 - 52	SKR4F20/04	♦SEKG	239 -185	SL1505HE	♦SEN	367 -125	[illegible]00A	♦SCN	353 -106	SLD2.4S	♦SOD	417 - 1
SKN46/14	♦SEKG	409 -164	SKR4F20/06	♦SEKG	240 - 38	SL1510FR	♦SEN	368 -122	[illegible]10	♦SCN	353 -107	SLD2.4T	♦SOD	417 - 2
SKN46/16	♦SEKG	412 -152	SKR4F40/02	♦SEKG	239 - 92	SL1510HE	♦SEN	367 -158	SLC110A	♦SCN	353 -108	SLD2.4TS	♦SOD	417 - 3
SKN70/02	♦SEKG	305 -163	SKR4F40/04	♦SEKG	239 -186	SL1515HE	♦SEN	367 -160	SLC120	♦SCN	353 -109	SLD2.4V	♦SOD	417 - 4
SKN70/04	♦SEKG	305 -167	SKR4F40/06	♦SEKG	240 - 39	SL1520	♦SEN	369 - 25	SLC120A	♦SCN	353 -110	SLD2.8S	♦SOD	418 -161

b. Locate that page and line number, and you will find the electrical characteristics. The circuit outline drawing number M1243 is in the last column and the drawings are listed sequentially in the Drawing Index. (See Table of Contents)

8. STANDARD RECOVERY BRIDGE RECTIFIERS

IN ORDER OF: (1) IO MAX (2) PIV (3) @ TEMP & (4) TYPE NUMBER

LINE No.	4 TYPE NUMBER	2 PIV (V)	MAX AVG FWD DC CURRENT 1 Io MAX (A)	3 @ TEMP (°C)	MAX RATING SURGE CURR PEAK 1 Cy (A)	PULSE WIDTH (s)	MAX. TEMP (°C)	MAT	DRAWING No.	LINE No.	4 TYPE NUMBER	2 PIV (V)	MAX AVG FWD DC CURRENT 1 Io MAX (A)	3 @ TEMP (°C)	MAX RATING SURGE CURR PEAK 1 Cy (A)	PULSE WIDTH (s)	MAX. TEMP (°C)	MAT	DRAWING No.
1▼	MP805G	50	8.0	75C	200	8.3m	150	Si	C188e	111	S10A05FR*	50	10	55C	100		150	Si	M1034a
2	8SB050	50	8.0	80	300	8.3m	150	Si	C216d	112	SCBH05F*	50	10	55	80		150	Si	C216h
3	KBU8A	50	8.0	100C	300	8.3m	150J	Si	M1285	113	SDA165A	50	10	55C	150		125	Si	C216c
4	BR81	100	8.0	40A	250	8.0m	150S	Si	C219	114	SDA267A	50	10	55C	125		150C	Si	C216h
5	BR81F	100	8.0	50A	250		125A	Si	C219	115♦	SDA304A	50	10	55C	125	8.3m	150	Si	C218e
6	BR81G	100	8.0	50A	250		125A	Si	C219	116	VJ048X*	50	10	60C	75	8.3m	150J	Si	C216d
7▼	DB801T	100	8.0	50A	125	16m	125	Si	M1341	117	100JB05L	50	10	65C	130		150A	Si	C218c
8▼	DB801W	100	8.0	50A	125	16m	125	Si	C219a	118	MB1005	50	10	75H	150		150	Si	C219j
9	KBPC801	100	8.0	50C	125	8.3m	125J	Si	C219a†	119	MB1005G	50	10	75H	150		175	Si	C219j
10	MDA970A2	100	8.0	55C	100		150J	Si△	M1101	120▼	MP1005G	50	10	75C	200	8.3m	150	Si	C188e
11	MB81	100	8.0	75A	25		150	Si	C219j	121	10SB050	50	10	80	300	8.3m	150	Si	C216d
12	MB81G	100	8.0	75A	125		175	Si	C219j	122	10TB050	50	10	80	400	8.3m	150	Si	C230a
13▼	MP81	100	8.0	75	200	8.3m	125	Si	C188e	123	dc10.5	50	10.0	80C	125		150A	Si	M1196
14▼	MP81G	100	8.0	75C	200	8.3m	150	Si	C188e	124	VJ048*	50	10	80C	100	8.3m	150J	Si	C216d
15	8SB100	100	8.0	80	300	8.3m	150	Si	C216d	125	SL1505HE	50	10	100C	65		150A	Si	M1243
16	KBU8B	100	8.0	100C	300	8.3m	150J	Si	M1285	126	K850-1	100	10		300			Si	C188f
17	BR82	200	8.0	40A	250	8.0m	150S	Si	C219	127▼	SRM10A	100	10					Si	
18	BR82F	200	8.0	50A	250		125A	Si	C219	128	TJ118-1	100	10		300			Si	C224j

c. Locate the Outline drawing number in the Outline Drawing Index and note the page number listed. EXAMPLE: M1243

DRAWING INDEX – DIODE DEVICES

OUTLINE DRAWINGS

DRAWING NO.	PAGE	DRAWING NO.	PAGE	DRAWING NO.	PAGE	DRAWING NO.	PAGE	DRAWING NO.	PAGE	DRAWING NO.	PAGE	DRAWING NO.	PAGE
M1112	553	M1186a	562	M1238	572	M1290	582	M1352	594	S65a	601	S305	606
M1115	553	M1187	562	M1239	572	M1291	582	M1353	594	S66	601	S322	606
M1116	553	M1188	562	M1240	572	M1292	582	M1354	594	S66a-c	601	S322a-c	606
M1117	553	M1188a-b	563	M1241	573	M1293	583	M1355	594	S67	601	S324	606
M1118	554	M1189	5[illegible]	M1242	573	M1294	583	M1356	594	S67a	601	S329	606
M1119a-i	554	M1190	5[illegible]	M1243	573	M1295	584	M1357	594	S68	601	S339	606

d. Turn to page indicated and locate the drawing and dimensions.

OUTLINE DRAWINGS

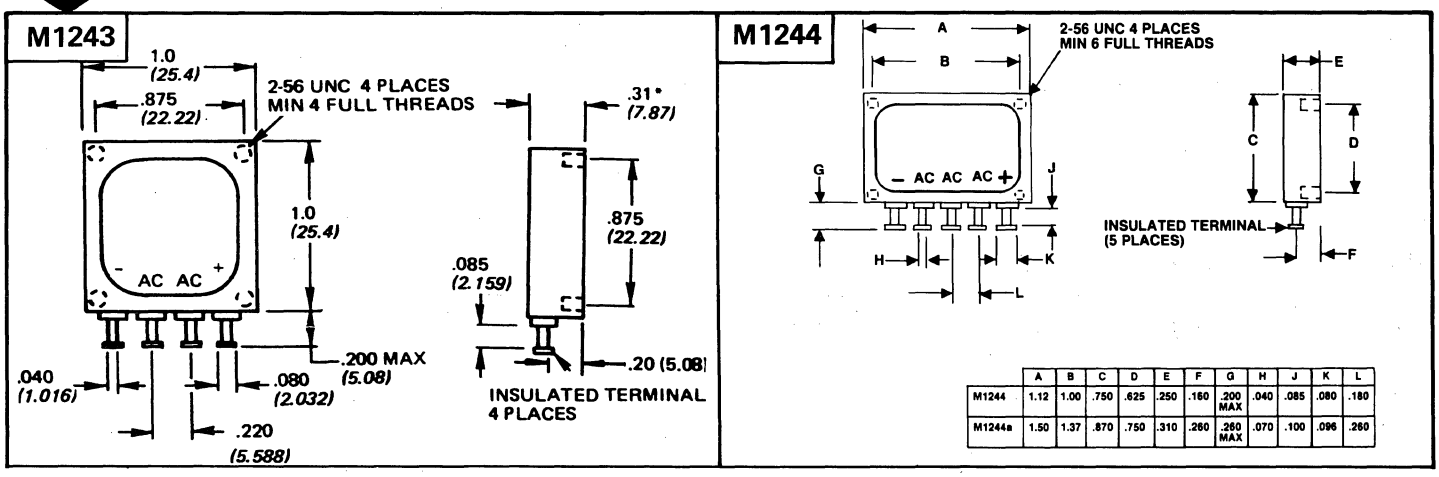

	A	B	C	D	E	F	G	H	J	K	L
M1244	1.12	1.00	.750	.625	.250	.160	.200 MAX	.040	.085	.080	.180
M1244a	1.50	1.37	.870	.750	.310	.260	.260 MAX	.070	.100	.096	.260

NOTE - Symbols and codes used in these technical sections are explained in the "Interpreter" pages at the back of the book.

DEFINITIONS OF TERMS

Interpreters and Definitions

This section defines column headings and symbols appearing in the Technical Sections of this book. Sorted alphabetically by field description, "Column Definitions" interprets the field titles and indicates the section usage.

SECTION 8 STANDARD RECOVERY BRIDGE RECTIFIERS SECTION 8

LINE No.	4 TYPE NO.	2 PIV (V)	MAX AVG FWD DC CURRENT 1 Io (A)	3 @ TEMP (°C)	MAX RATING SURGE CURR PEAK 1 Cy (A)	PULSE WIDTH (s)	MAX. TEMP (°C)	DESCRIPTION MAT	DRAWING No.
✪	✪	2	3	4	5	6	8	✪	10

2 - Also listed in Section 6 under Radiation Resistant Device (Use 9) (also see above)
* - Three-Phase Bridge

3 $ - Max. cont. working voltage (PIV not specified)
% - Max. non-repetitive peak transient reverse voltage

5 (Value given indicates temp. at which derating starts, unless otherwise indicated)
$ - Temperature at which derating starts is not specified.
A - Ambient
B - Base or stud
C - Case
H - Heat Sink
J - Junction

8 A - Ambient
B - Base or stud
C - Case
J - Junction
L - Lead
S - Storage

10 ⊡ - Available with reverse polarity; consult manufacturer

INTERPRETER (Also See Symbols & Codes)

SYMBOLS: Symbols such as #,Δ, and $ are used in all columns, numeric or otherwise, whenever the data entries differ in some way from the entity defined in the column heading. For instance, if a given heading specifies Max. Power (in Watts) and the numeric value being entered for a given type represents the minimum power instead, the variance is denoted by the appearance of a special symbol alongside the numeric entry.

CODES: Codes are used in some columns as means to abbreviate the data being entered. The codes may be alphabetic (A,B,C, etc.) numeric (1,2,3 etc.) or some combination of both.

NOTE: The symbols and codes used herein are explained on the Interpreter Pages in the back or the front of the book.

POWERS-OF-TEN MULTIPLIERS

The powers-of-ten multipliers shown below are used in numeric columns when the value being entered is many times greater or smaller than the units of measure indicated in the column heading. Usually, the latter are the so-called 'basic' units; such as V (volts), A (amperes) and s (seconds). The multipliers and an explanation of their use are given below:

EXPLANATION

Value of Data To Be Entered	Basic Unit In Column Heading	Actual Entry
3 milliamperes	A (amperes)	3.0m
9 megaohms	Ω (ohms)	9.0M
0.5 volt	V (volts)	500m*
10 amperes	A (amperes)	10

*May also be written as 0.5 with no multiplier

MULTIPLIERS

Power	Prefix	Symbol
10^{12}	tera	T
10^{9}	giga	G
10^{6}	mega	M
10^{3}	kilo	k
10^{-3}	milli	m
10^{-6}	micro	μ
10^{-9}	nano	n
10^{-12}	pico	p
10^{-15}	femto	f
10^{-18}	atto	a

SEQUENCING PARAMETERS

The arrangement of types in the technical sections is keyed to a set of special characteristics selected for their importance from among the general group of characteristics tabulated in each section. These selected characteristics or sequencing parameters differ from one section to another, and are identified at the top of each page as shown in the sample below.

The different types within a section are first arranged in ascending numeric (or alphabetic) order of the first such parameters. Groups of types having a common value for the first parameter are then arranged in ascending order of the second parameter. This process continues for each parameter in turn, up to and including the last parameter which, in every instance, is the type number itself. The final arrangement, by type number, is done in accordance with the sequencing of type numbers in the cross-index. The absence of an entry for any sequencing parameter is regarded as a zero and precedes any actual entries in the sequencing.

MAJOR CHARACTERISTICS — SEQUENCING PARAMETERS

8. STANDARD RECOVERY BRIDGE RECTIFIERS

IN ORDER OF: (1) IO MAX (2) PIV (3) @ TEMP & (4) TYPE NUMBER

LINE No.	4 TYPE NUMBER	2 PIV (V)	MAX AVG FWD DC CURRENT 1 Io MAX (A)	3 @ TEMP (°C)	MAX RATING SURGE CURR PEAK 1 Cy (A)	PULSE WIDTH (s)	MAX. TEMP (°C)	MAT	DRAWING No.	LINE No.	4 TYPE NUMBER	2 PIV (V)	MAX AVG FWD DC CURRENT 1 Io MAX (A)	3 @ TEMP (°C)	MAX RATING SURGE CURR PEAK 1 Cy (A)	PULSE WIDTH (s)	MAX. TEMP (°C)	MAT	DRAWING No.
1▼	MP805G	50	8.0	75C	200	8.3m	150	Si	C188e	111	S10A05FR*	50	10	55C	100		150	Si	M1034a
2	8SB050	50	8.0	80	300	8.3m	150	Si	C216d	112	SCBH05F*	50	10	55	80		150	Si	C216h
3	KBU8A	50	8.0	100C	300	8.3m	150J	Si	M1285	113	SDA165A	50	10	55C	150		125	Si	C216c
4	BR81	100	8.0	40A	250	8.0m	150S	Si	C219	114	SDA267A	50	10	55C	125		150C	Si	C216h
5	BR81F	100	8.0	50A	250		125A	Si	C219	115♦	SDA304A	50	10	55C	125	8.3m	150	Si	C218e
6	BR81G	100	8.0	50A	250		125A	Si	C219	116	VJ048X*	50	10	60C	75	8.3m	150J	Si	C216d
7▼	DB801T	100	8.0	50A	125	16m	125	Si	M1341	117	100JB05L	50	10	65C	130		150A	Si	C218c
8▼	DB801W	100	8.0	50A	125	16m	125	Si	C219a	118	MB1005	50	10	75H	150		150	Si	C219j
9	KBPC801	100	8.0	50C	125	8.3m	125J	Si	C219a†	119	MB1005G	50	10	75H	150		175	Si	C219j
10	MDA970A2	100	8.0	55C	100		150J	SiΔ	M1101	120▼	MP1005G	50	10	75C	200	8.3m	150	Si	C188e
11	MB81	100	8.0	75A	25		150	Si	C219j	121	10SB050	50	10	80	300	8.3m	150	Si	C216d
12	MB81G	100	8.0	75A	125		175	Si	C219j	122	10TB050	50	10	80	400	8.3m	150	Si	C230a
13▼	MP81	100	8.0	75	200	8.3m	125	Si	C188e	123	dc10.5	50	10.0	80C	125		150A	Si	M1196
14▼	MP81G	100	8.0	75C	200	8.3m	150	Si	C188e	124	VJ048*	50	10	80C	100	8.3m	150J	Si	C216d
15	8SB100	100	8.0	80	300	8.3m	150	Si	C216d	125	SL1505HE	50	10	100C	65		150A	Si	M1243
16	KBU8B	100	8.0	100C	300	8.3m	150J	Si	M1285	126	K850-1	100	10		300			Si	C188f
17	BR82	200	8.0	40A	250	8.0m	150S	Si	C219	127▼	SRM10A	100	10					Si	
18	BR82F	200	8.0	50A	250		125A	Si	C219	128	TJ118-1	100	10		300			Si	C224j

2 GRUNDSÄTZLICHE MÖGLICHKEITEN:

	Wenn Sie schon wissen:	Und Sie möchten wissen:	Lesen Sie:
1	Die elektrischen und mechanischen Anforderungen	Eine Typennummer (Bestandteil Nummer des Herstellers)	Erklärung 1
2	Eine Typennummer	Die elektrischen und/oder mechanischen Merkmale oder die Schaltkreis Zusammenstellung und Außenabmessungen oder den Hersteller oder eine Äquivalenztype	Erklärung 2

ERKLÄRUNG 1

Wenn Sie schon wissen:
Die elektrischen und mechanischen Anforderungen (inclusive militärische)
Und Sie möchten wissen:
Eine geeignete Typennummer
Erstens:
Lesen Sie weiter bei TABLE OF CONTENTS

a. Wählen Sie aus dem Inhaltsverzeichnis den technischen Abschnitt aus der dem schon bekannten Bauteiltyp entspricht. BEISPIEL: Technischer Abschnitt **8**

TABLE OF CONTENTS — Page

HOW TO USE THIS BOOK
English I
German VII
French XIII
Spanish XIX
Japanese XXV
COMPONENT LOCATOR XXXI
1. **TYPE NO. CROSS INDEX** 1
2. **VOLTAGE REFERENCE DIODES**
Single-&-Double-Anode Types, $P_D < 5W$ 163
3. **GENERAL-PURPOSE DIODES**
Devices to 1 A 231
4. **HIGH-SPEED DIODES**
Including Switching & Fast Recovery Rectifiers 238
5. **GENERAL-PURPOSE RECTIFIERS**
Devices to 7 kA 274
6. **DIODE ARRAYS & MATRICES**
Array 314
Matrix 315
7. **TRANSIENT SUPPRESSOR DIODES**
Including Unipolar & Bipolar Types 316
POWER DEVICES
8. **STANDARD RECOVERY BRIDGE RECTIFIERS**
Single Phase 360
Three Phase 372
9. **SCHOTTKY RECTIFIERS**
Single, & Dual Center-Tapped Diodes 374
10. **VOLTAGE-REGULATOR DIODES**
$P_D \geq 5$ W 377
11. **HIGH-VOLTAGE RECTIFIERS**
PIV $\geq$ 1 kV 401
12. **MISCELLANEOUS DIODES**
Current Regulator/Limiter 434
Logarithmic-Conversion Diode 435
Matched Configuration 435
Noise Generator 435
Schottky-Barrier Diode 436
UHF Detector 439
UHF Mixer 439
Varistor 439
Additional Diode Devices 444
SUPPLEMENTARY SECTIONS
13. Types With U.S. Military Specifications 429
14. Circuit Drawings 449
15. Outline Drawings 453
MANUFACTURERS PROFILE 635
INTERPRETER – Symbols & Codes Explained DI1
DRAWING INDEX DI12
SPECIAL INSERT
Manufacturers' Sales Offices SOL1

b. Lesen Sie beim entsprechenden Abschnitt weiter. Ermitteln Sie die Typennummer, welche generell Ihren Anforderungen entspricht. BEISPIEL: **SL1505HE**

Auf Grund der gewählten Reihenfolge werden Sie ähnliche Typen in unmittelbarer Nachbarschaft angeführt finden.

Beachten Sie die Parameter für die gewählte Reihenfolge; diese sind in der oberen rechten Ecke auf jeder Seite angeführt.

8. STANDARD RECOVERY BRIDGE RECTIFIERS

IN ORDER OF: (1) IO MAX (2) PIV (3) @ TEMP & (4) TYPE NUMBER

LINE No.	4 TYPE NUMBER	2 PIV (V)	MAX AVG FWD DC CURRENT 1 Io MAX (A)	3 @ TEMP (°C)	MAX RATING SURGE CURR PEAK 1 Cy (A)	PULSE WIDTH (s)	MAX. TEMP (°C)	MAT	DRAWING No.	LINE No.	4 TYPE NUMBER	2 PIV (V)	MAX AVG FWD DC CURRENT 1 Io MAX (A)	3 @ TEMP (°C)	MAX RATING SURGE CURR PEAK 1 Cy (A)	PULSE WIDTH (s)	MAX. TEMP (°C)	MAT	DRAWING No.
1▼	MP805G	50	8.0	75C	200	8.3m	150	Si	C188e	111	S10A05FR*	50	10	55C	100		150	Si	M1034a
2	8SB050	50	8.0	80	300	8.3m	150	Si	C216d	112	SCBH05F*	50	10	55	80		150	Si	C216h
3	KBU8A	50	8.0	100C	300	8.3m	150J	Si	M1285	113	SDA165A	50	10	55C	150		125	Si	C216c
4	BR81	100	8.0	40A	250	8.0m	150S	Si	C219	114	SDA267A	50	10	55C	125		150C	Si	C216h
5	BR81F	100	8.0	50A	250		125A	Si	C219	115♦	SDA304A	50	10	55C	125	8.3m	150	Si	C218e
6	BR81G	100	8.0	50A	250		125A	Si	C219	116	VJ048X*	50	10	60C	75	8.3m	150J	Si	C216d
7▼	DB801T	100	8.0	50A	125	16m	125	Si	M1341	117	100JB05L	50	10	65C	130		150A	Si	C218c
8▼	DB801W	100	8.0	50A	125	16m	125	Si	C219a	118	MB1005	50	10	75H	150		150	Si	C219j
9	KBPC801	100	8.0	50C	125	8.3m	125J	Si	C219a†	119	MB1005G	50	10	75H	150		175	Si	C219j
10	MDA970A2	100	8.0	55C	100		150J	Si△	M1101	120▼	MP1005G	50	10	75C	200	8.3m	150	Si	C188e
11	MB81	100	8.0	75A	25		150	Si	C219j	121	10SB050	50	10	80	300	8.3m	150	Si	C216d
12	MB81G	100	8.0	75A	125		175	Si	C219j	122	10TB050	50	10	80	400	8.3m	150	Si	C230a
13▼	MP81	100	8.0	75	200	8.3m	125	Si	C188e	123	dc10.5	50	10.0	80C	125		150A	Si	M1196
14▼	MP81G	100	8.0	75C	200	8.3m	150	Si	C188e	124	VJ048*	50	10	80C	100	8.3m	150J	Si	C216d
15	8SB100	100	8.0	80	300	8.3m	150	Si	C216d	125	SL1505HE	50	10	100C	65		150A	Si	M1243
16	KBU8B	100	8.0	100C	300	8.3m	150J	Si	M1285	126	K850-1	100	10		300			Si	C188f
17	BR82	200	8.0	40A	250	8.0m	150S	Si	C219	127▼	SRM10A	100	10					Si	
18	BR82F	200	8.0	50A	250		125A	Si	C219	128	TJ118-1	100	10		300			Si	C224j

Zweitens:

Lesen Sie weiter beim Abschnitt TYPE NUMBER CROSS INDEX

a. Finden Sie Ihre gewählte Typennummer **SL1505HE.**

b. Beachten Sie den/die Hersteller-Code(s) rechts von der Bauteilnummer. BEISPIEL: **SEN**

c. Beachten Sie die Seitenzahl und Zeilennummer. BEISPIEL: **367-125**

1. TYPE No. CROSS INDEX

IN TYPE NUMBER SEQUENCE

TYPE No.	MFRS	Pg&Line	TYPE No.	MFRS	Pg&Line	TYPE No.	MFRS	Pg&Line	TYPE No.	MFRS	Pg&Line	TYPE No.	MFRS	Pg&Line
SKN26/16	♦SEKG	412 -125	SKR2M240/08	♦SEKG	309 - 81	SKXA150M	♦SEKG	433 -198	SLC64A	♦SCN	353 - 96	SLD1.5TS	♦SOD	411 - 47
SKN45/02	♦SEKG	302 -164	SKR2M240/10	♦SEKG	404 -134	SKXA150N	♦SEKG	433 -199	SLC70	♦SCN	353 - 97	SLD1.5U	♦SOD	411 - 53
SKN45/04	♦SEKG	302 -200	SKR2M240/12	♦SEKG	408 - 8	SKXA75000	♦SEKG	433 -120	SLC70A	♦SCN	353 - 98	SLD1.5V	♦SOD	411 - 48
SKN45/08	♦SEKG	303 - 23	SKR3F2/10	♦SEKG	261 -124	SL8	CODI	425 -219	SLC75	♦SCN	353 - 99	SLD1.6S	♦SOD	412 - 23
SKN45/12	♦SEKG	407 - 51	SKR3F2/12	♦SEKG	261 -155	SL10	CODI	427 - 22	SLC75A	♦SCN	353 -100	SLD1.8T	♦SOD	413 -205
SKN45/14	♦SEKG	409 -163	SKR3F20/06	♦SEKG	260 -212	SL15	CODI	429 - 24	SLC80	♦SCN	353 -101	SLD1.8TS	♦SOD	413 -206
SKN45/16	♦SEKG	412 -151	SKR3F20/08	♦SEKG	261 - 67	SL20	CODI	430 -116	SLC80A	♦SCN	353 -102	SLD2	♦SOD	415 - 56
SKN46/02	♦SEKG	302 -165	SKR3F20/10	♦SEKG	261 -125	SL25	CODI	431 - 90	SLC90	♦SCN	353 -103	SLD2S	♦SOD	415 - 21
SKN46/04	♦SEKG	302 -201	SKR3F20/12	♦SEKG	261 -126	SL30	CODI	432 - 33	SLC90A	♦SCN	353 -104	SLD2U	♦SOD	415 - 27
SKN46/08	♦SEKG	303 - 24	SKR4F20/02	♦SEKG	239 - 91	SL45	CODI	432 -216	SLC100	♦SCN	353 -105	SLD2V	♦SOD	415 - 22
SKN46/12	♦SEKG	407 - 52	SKR4F20/04	♦SEKG	239 -185	SL1505HE	♦SEN	367 -125	SLC100A	♦SCN	353 -106	SLD2.4S	♦SOD	417 - 1
SKN46/14	♦SEKG	409 -164	SKR4F20/06	♦SEKG	240 - 38	SL1510FR	♦SEN	368 -122	SLC110	♦SCN	353 -107	SLD2.4T	♦SOD	417 - 2
SKN46/16	♦SEKG	412 -152	SKR4F40/02	♦SEKG	239 - 92	SL1510HE	♦SEN	367 -158	SLC110A	♦SCN	353 -108	SLD2.4TS	♦SOD	417 - 3
SKN70/02	♦SEKG	305 -163	SKR4F40/04	♦SEKG	239 -186	SL1515HE	♦SEN	367 -160	SLC120	♦SCN	353 -109	SLD2.4V	♦SOD	417 - 4
SKN70/04	♦SEKG	305 -167	SKR4F40/06	♦SEKG	240 - 39	SL1520	♦SEN	369 - 25	SLC120A	♦SCN	353 -110	SLD2.8S	♦SOD	418 -161

d. Fahren Sie fort mit dem Abschnitt MANUFACTURERS' CODES & NAMES.

e. Finden Sie den Hersteller-Code und -Namen. BEISPIEL: **SEN**

MANUFACTURERS' CODES & NAMES

D.A.T.A. MFRS.' CODE		MANUFACTURERS
IMTM		Industria Mexicana Toshiba
INC		International Components Corp.
INL		Intersil, Inc.
INR		International Rectifier Corp.
INRI		International Rectifier Corp.
INRJ		International Rectifier Corp.
ITTG	*	ITT Semiconductors Intermetall
KSI	*	Knox Semiconductor, Inc.
LAM		Lambda Semiconductors
LTE		Lansdale Transistor & Electronics,

D.A.T.A. MFRS.' CODE		MANUFACTURERS
SCN	*	Semicon Components, Inc.
SDI		SDI, Inc.
SEKG	*	Semikron Int'l, Inc.
SELI		Semiconductors, Ltd.
SEN		Sensitron Semiconductor, Div.
SES	*	Semitronics Corp.
SET	*	Semtech Corp.
SGSI		SGS-ATES Componenti Elet. SPA
SHEJ		Shindengen Elect. Mfg. Co., Ltd.
SIEG		Siemens Aktiengesellschaft

ERKLÄRUNG 2

Wenn Sie schon wissen:
Die Typennummer
Und Sie möchten wissen:
Die elektrischen Merkmale
Erstens:
Fahren Sie fort mit TYPE NUMBER CROSS INDEX und finden Sie dort Ihre Typennummer.

a. Merken Sie sich die Seitenzahl und Zeilennummer neben Ihrer Type. BEISPIEL: **367-125**

1. TYPE No. CROSS INDEX

IN TYPE NUMBER SEQUENCE

TYPE No.	MFRS	Pg&Line	TYPE No.	MFRS	Pg&Line	TYPE No.	MFRS	Pg&Line	TYPE No.	MFRS	Pg&Line	TYPE No.	MFRS	Pg&Line
SKN26/16	♦SEKG	412 -125	SKR2M240/08	♦SEKG	309 - 81	SKXA150M	♦SEKG	433 -198	SLC64A	♦SCN	353 - 96	SLD1.5TS	♦SOD	411 - 47
SKN45/02	♦SEKG	302 -164	SKR2M240/10	♦SEKG	404 -134	SKXA150N	♦SEKG	433 -199	SLC70	♦SCN	353 - 97	SLD1.5U	♦SOD	411 - 53
SKN45/04	♦SEKG	302 -200	SKR2M240/12	♦SEKG	408 - 8	SKXA75000	♦SEKG	433 -120	SLC70A	♦SCN	353 - 98	SLD1.5V	♦SOD	411 - 48
SKN45/08	♦SEKG	303 - 23	SKR3F2/10	♦SEKG	261 -124	SL8	CODI	425 -219	SLC75	♦SCN	353 - 99	SLD1.6S	♦SOD	412 - 23
SKN45/12	♦SEKG	407 - 51	SKR3F2/12	♦SEKG	261 -155	SL10	CODI	427 - 22	SLC75A	♦SCN	353 -100	SLD1.8T	♦SOD	413 -205
SKN45/14	♦SEKG	409 -163	SKR3F20/06	♦SEKG	260 -212	SL15	CODI	429 - 24	SLC80	♦SCN	353 -101	SLD1.8TS	♦SOD	413 -206
SKN45/16	♦SEKG	412 -151	SKR3F20/08	♦SEKG	261 - 67	SL20	CODI	430 -116	SLC80A	♦SCN	353 -102	SLD2	♦SOD	415 - 56
SKN46/02	♦SEKG	302 -165	SKR3F20/10	♦SEKG	261 -125	SL25	CODI	431 - 90	SLC90	♦SCN	353 -103	SLD2S	♦SOD	415 - 21
SKN46/04	♦SEKG	302 -201	SKR3F20/12	♦SEKG	261 -126	SL30	CODI	432 - 33	SLC90A	♦SCN	353 -104	SLD2U	♦SOD	415 - 27
SKN46/08	♦SEKG	303 - 24	SKR4F20/02	♦SEKG	239 - 91	SL45	CODI	432 -216	SLC100	♦SCN	353 -105	SLD2V	♦SOD	415 - 22
SKN46/12	♦SEKG	407 - 52	SKR4F20/04	♦SEKG	239 -185	SL1505HE	♦SEN	367 -125	SLC100A	♦SCN	353 -106	SLD2.4S	♦SOD	417 - 1
SKN46/14	♦SEKG	409 -164	SKR4F20/06	♦SEKG	240 - 38	SL1510FR	♦SEN	368 -122	SLC110	♦SCN	353 -107	SLD2.4T	♦SOD	417 - 2
SKN46/16	♦SEKG	412 -152	SKR4F40/02	♦SEKG	239 - 92	SL1510HE	♦SEN	367 -158	SLC110A	♦SCN	353 -108	SLD2.4TS	♦SOD	417 - 3
SKN70/02	♦SEKG	305 -163	SKR4F40/04	♦SEKG	239 -186	SL1515HE	♦SEN	367 -160	SLC120	♦SCN	353 -109	SLD2.4V	♦SOD	417 - 4
SKN70/04	♦SEKG	305 -167	SKR4F40/06	♦SEKG	240 - 39	SL1520	♦SEN	369 - 25	SLC120A	♦SCN	353 -110	SLD2.8S	♦SOD	418 -161

b. Wenn Sie die entsprechende Seite aufschlagen, werden Sie bei der angegebenen Zeilennummer die elektrischen Merkmale finden. Die Nummern für das entsprechende Schaltschema und für die Zeichnung der Außenabmessungen des Bauteiles, **M1243** sind in der letzten Kolonne angegeben, während die Zeichnungen selbst der Reihenfolge nach im "Drawing Index" angeführt sind. (Siehe Inhaltsverzeichnis.)

8. STANDARD RECOVERY BRIDGE RECTIFIERS

IN ORDER OF: (1) IO MAX (2) PIV (3) @ TEMP & (4) TYPE NUMBER

LINE No.	4 TYPE NUMBER	2 PIV (V)	MAX AVG FWD DC CURRENT 1 Io MAX (A)	3 @ TEMP (°C)	MAX RATING SURGE CURR PEAK 1 Cy (A)	PULSE WIDTH (s)	MAX. TEMP (°C)	MAT	DRAWING No.	LINE No.	4 TYPE NUMBER	2 PIV (V)	MAX AVG FWD DC CURRENT 1 Io MAX (A)	3 @ TEMP (°C)	MAX RATING SURGE CURR PEAK 1 Cy (A)	PULSE WIDTH (s)	MAX. TEMP (°C)	MAT	DRAWING No.
1▼	MP805G	50	8.0	75C	200	8.3m	150	Si	C188e	111	S10A05FR*	50	10	55C	100		150	Si	M1034a
2	8SB050	50	8.0	80	300	8.3m	150	Si	C216d	112	SCBH05F*	50	10	55	80		150	Si	C216h
3	KBU8A	50	8.0	100C	300	8.3m	150J	Si	M1285	113	SDA165A	50	10	55C	150		125	Si	C216c
4	BR81	100	8.0	40A	250	8.0m	150S	Si	C219	114	SDA267A	50	10	55C	125		150C	Si	C216h
5	BR81F	100	8.0	50A	250		125A	Si	C219	115♦	SDA304A	50	10	55C	125	8.3m	150	Si	C218e
6	BR81G	100	8.0	50A	250		125A	Si	C219	116	VJ048X*	50	10	60C	75	8.3m	150J	Si	C216d
7▼	DB801T	100	8.0	50A	125	16m	125	Si	M1341	117	100JB05L	50	10	65C	130		150A	Si	C218c
8▼	DB801W	100	8.0	50A	125	16m	125	Si	C219a	118	MB1005	50	10	75H	150		150	Si	C219j
9	KBPC801	100	8.0	50C	125	8.3m	125J	Si	C219a†	119	MB1005G	50	10	75H	150		175	Si	C219j
10	MDA970A2	100	8.0	55C	100		150J	Si△	M1101	120▼	MP1005G	50	10	75C	200	8.3m	150	Si	C188e
11	MB81	100	8.0	75A	25		150	Si	C219j	121	10SB050	50	10	80	300	8.3m	150	Si	C216d
12	MB81G	100	8.0	75A	125		175	Si	C219j	122	10TB050	50	10	80	400	8.3m	150	Si	C230a
13▼	MP81	100	8.0	75	200	8.3m	125	Si	C188e	123	dc10.5	50	10.0	80C	125		150A	Si	M1196
14▼	MP81G	100	8.0	75C	200	8.3m	150	Si	C188e	124	VJ048*	50	10	80C	100	8.3m	150J	Si	C216d
15	8SB100	100	8.0	80	300	8.3m	150	Si	C216d	125	SL1505HE	50	10	100C	65		150A	Si	M1243

c. Nachdem Sie die Nummer für die Zeichnung der Außenabmessungen im "Outline Drawing Index" gefunden haben, merken Sie sich die angeführte Seitenzahl. BEISPIEL: **M1243**

DRAWING INDEX – DIODE DEVICES

OUTLINE DRAWINGS

DRAWING NO.	PAGE	DRAWING NO.	PAGE	DRAWING NO.	PAGE	DRAWING NO.	PAGE	DRAWING NO.	PAGE	DRAWING NO.	PAGE	DRAWING NO.	PAGE
M1112	553	M1186a	562	M1238	572	M1290	582	M1352	594	S65a	601	S305	606
M1115	553	M1187	562	M1239	572	M1291	582	M1353	594	S66	601	S322	606
M1116	553	M1188	562	M1240	572	M1292	582	M1354	594	S66a-c	601	S322a-c	606
M1117	553	M1188a-b	563	M1241	573	M1293	583	M1355	594	S67	601	S324	606
M1118	554	M1189	562	M1242	573	M1294	583	M1356	594	S67a	601	S329	606
M1119a-i	554	M1190	56	M1243	573	M1295	584	M1357	594	S68	601	S339	606

d. Schlagen Sie die angegebene Seite auf. Sie werden dort die gesuchte Zeichnung und die dazugehörigen Abmessungen finden.

OUTLINE DRAWINGS

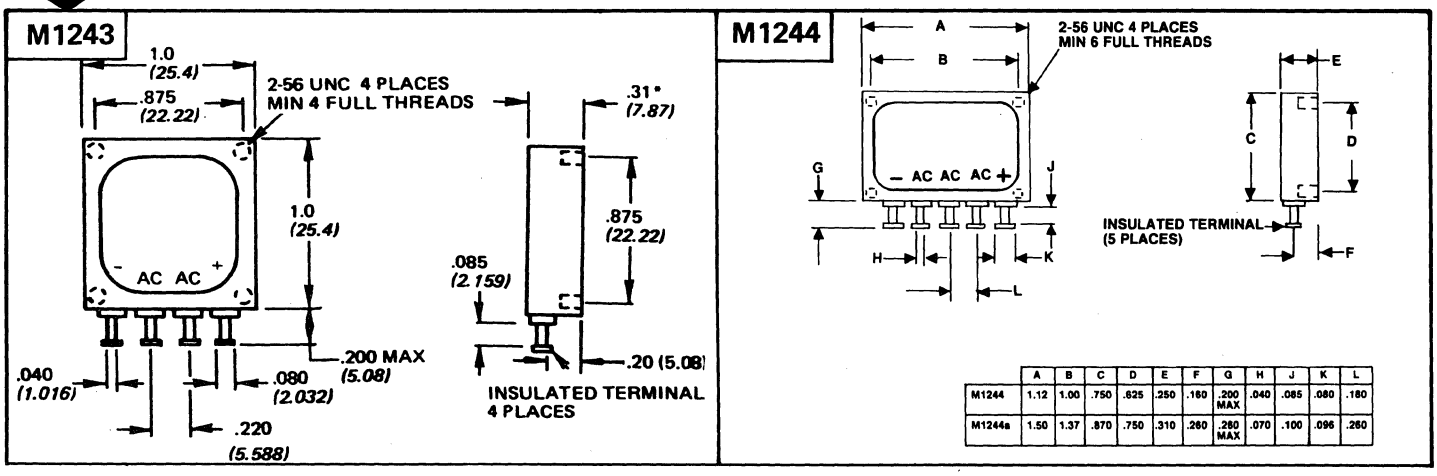

	A	B	C	D	E	F	G	H	J	K	L
M1244	1.12	1.00	.750	.625	.250	.160	.200 MAX	.040	.085	.080	.180
M1244a	1.50	1.37	.870	.750	.310	.260	.280 MAX	.070	.100	.096	.260

HINWEIS – Die in diesen technischen Abschnitten verwandten Symbole und Codes sind am Ende des Buches unter "Interpreter" erklärt.

BEGRIFFSDEFINITIONEN

ERLÄUTERUNGEN UND DEFINITIONEN

In diesem Abschnitt werden die Kolonnenüberschriften und Symbole, welche in den technischen Abschnitten dieses Buches erscheinen, definiert. Mit den in alphabetischer Reihenfolge angeordneten Anwendungsbereichen der Bauteile, werden unter "Column Definitions" die Kolonnenüberschriften erklärt und der Gebrauch der einzelnen Abschnitte erläutert.

SECTION 8 STANDARD RECOVERY BRIDGE RECTIFIERS SECTION 8

LINE No.	4 TYPE NO.	2 PIV (V)	MAX AVG FWD DC CURRENT 1 Io (A)	3 @ TEMP (°C)	MAX RATING SURGE CURR PEAK 1 Cy (A)	PULSE WIDTH (s)	MAX. TEMP (°C)	DESCRIPTION MAT	DRAWING No.
✪	✪	2	3	4	5	6	8	✪	10

2 – Also listed in Section 6 under Radiation Resistant Device (Use 9) (also see above)
* – Three-Phase Bridge

3 $ – Max. cont. working voltage (PIV not specified)
% – Max. non-repetitive peak transient reverse voltage

5 (Value given indicates temp. at which derating starts, unless otherwise indicated)
$ – Temperature at which derating starts is not specified.
A – Ambient
B – Base or stud
C – Case
H – Heat Sink
J – Junction
L – Lead
S – Storage

8 A – Ambient
B – Base or stud
C – Case
J – Junction
L – Lead
S – Storage

10 ⊡ – Available with reverse polarity; consult manufacturer
♦ – Single Operation

ERLÄUTERUNGEN (siehe auch Symbole & Codes)

SYMBOLE: Symbole wie #, ▲, und $ werden in allen Kolonnen verwendet, wenn immer sich die Eintragungen in irgendeiner Weise von den in den Kolonnentiteln definierten unterscheiden, gleichgültig ob diese von numerischer oder anderer Natur sind. Zum Beispiel, ist der gegebene Titel definiert als "Max. Power (in Watts)" und der eingetragene numerische Wert repräsentiert aber die Minimalleistung, so wird diese Abweichung durch ein spezielles Symbol neben der numerischen Eintragung gekennzeichnet.

CODES: Codes werden in manchen Kolonnen benutzt um eingetragene Daten abzukürzen. Diese Codes können alphabetischer (A, B, C etc.), numerischer (1, 2, 3 etc.) Natur oder auch eine Kombination aus beiden sein.

HINWEIS: Die hierin verwendeten Symbole und Codes sind in den "Interpreter Pages" am Anfang oder Ende des Buches erklärt.

MULTIPLIKATIONSFAKTOREN FÜR ZEHNERPOTENZEN

Die Multiplikationsfaktoren für Zehnerpotenzen, die im Folgenden angeführt sind, werden dann in numerischen Kolonnen gebraucht wenn der eingetragene Wert viele Male größer oder kleiner ist als die Maßeinheit welche im Kolonnentitel angegeben ist. Diese sind normalerweise die sogenannten Grundeinheiten wie V (Volt), A (Ampere) und s (Sekunden). Die Multiplikationsfaktoren und eine Erklärung für ihren Gebrauch sind wie folgt:

ERKLÄRUNG

Einzutragender Zahlenwert	Grundeinheit im Kolonnentitel	Tatsächliche Eintragung
3 milliamperes	A (amperes)	3.0m
9 megaohms	Ω (ohms)	9.0M
0.5 volt	V (volts)	500m *
10 amperes	A (amperes)	10

*Kann auch mit 0.5 ohne Multiplikator angegeben sein.

MULTIPLIKATOREN

Zehnerpotenz	Präfix	Symbol
10^{12}	tera	T
10^{9}	giga	G
10^{6}	mega	M
10^{3}	kilo	k
10^{-3}	milli	m
10^{-6}	micro	μ
10^{-9}	nano	n
10^{-12}	pico	p
10^{-15}	femto	f
10^{-18}	atto	a

SEQUENZ-BESTIMMENDE PARAMETER

Die Reihenfolge der angeführten Typen in den technischen Abschnitten ist durch eine Gruppe von speziellen Merkmalen bestimmt, welche nach ihrer Wichtigkeit unter den angegebenen allgemeinen Merkmalen eines Abschnittes ausgewählt wurden. Diese gewählten Merkmale oder Sequenz-Parameter unterscheiden sich von einem Abschnitt zum anderen und sind am Kopf jeder Seite, wie das Beispiel unten zeigt, identifiziert.

Die verschiedenen Typen innerhalb eines Abschnittes sind zuerst in steigender numerischer (oder alphabetischer) Reihenfolge des ersten Parameters angeordnet. Jene Gruppe von Typen, welche einen gemeinsamen Wert für den ersten Parameter aufweist, ist in steigender Reihenfolge des zweiten Parameters angeführt. Dieser Prozess setzt sich für jeden einzelnen Parameter der Reihe nach fort bis einschließlich des letzten welcher dann in jedem Fall die Typennummer selbst ist. Die endgültige Anordnung nach Typennummern ist in Übereinstimmung mit der im "Cross Index" verwandten Reihenfolge. Das Fehlen einer Eintragung für einen Sequenz-Parameter wird als Null gewertet und wird deshalb allen anderen tatsächlichen Eintragungen in der Reihenfolge vorangestellt.

MAJOR CHARACTERISTICS

SEQUENCING PARAMETERS

IN ORDER OF: (1) IO MAX (2) PIV (3) @ TEMP & (4) TYPE NUMBER

8. STANDARD RECOVERY BRIDGE RECTIFIERS

LINE No.	4 TYPE NUMBER	2 PIV (V)	MAX AVG FWD DC CURRENT 1 Io MAX (A)	3 @ TEMP (°C)	MAX RATING SURGE CURR PEAK 1 Cy (A)	PULSE WIDTH (s)	MAX. TEMP (°C)	MAT	DRAWING No.
1▼	MP805G	50	8.0	75C	200	8.3m	150	Si	C188e
2	8SB050	50	8.0	80	300	8.3m	150	Si	C216d
3	KBU8A	50	8.0	100C	300	8.3m	150J	Si	M1285
4	BR81	100	8.0	40A	250	8.0m	150S	Si	C219
5	BR81F	100	8.0	50A	250		125A	Si	C219
6	BR81G	100	8.0	50A	250		125A	Si	C219
7▼	DB801T	100	8.0	50A	125	16m	125	Si	M1341
8▼	DB801W	100	8.0	50A	125	16m	125	Si	C219a
9	KBPC801	100	8.0	50C	125	8.3m	125J	Si	C219a†
10	MDA970A2	100	8.0	55C	100		150J	Si△	M1101
11	MB81	100	8.0	75A	25		150	Si	C219j
12	MB81G	100	8.0	75A	125		175	Si	C219j
111	S10A05FR*	50	10	55C	100		150	Si	M1034a
112	SCBH05F*	50	10	55	80		150	Si	C216h
113	SDA165A	50	10	55C	150		125	Si	C216c
114	SDA267A	50	10	55C	125		150C	Si	C216h
115♦	SDA304A	50	10	55C	125	8.3m	150	Si	C218e
116	VJ048X*	50	10	60C	75	8.3m	150J	Si	C216d
117	100JB05L	50	10	65C	130		150A	Si	C218c
118	MB1005	50	10	75H	150		150	Si	C219j
119	MB1005G	50	10	75H	150		175	Si	C219j
120▼	MP1005G	50	10	75C	200	8.3m	150	Si	C188e
121	10SB050	50	10	80	300	8.3m	150	Si	C216d
122	10TB050	50	10	80	400	8.3m	150	Si	C230a

2 FACONS DE BASE:

	Si vous connaissez:	Et avez besoin de connaître:	Lisez:
1	Les caractéristiques électriques et mécaniques requises	La reference du produit (reference du fabricant)	Explication N° 1
2	La reference Du produit	Les caractéristiques mécaniques et/ou électriques ou son circuit et sa configuration d'encombrement ou le fabricant ou un modele equivalent	Explication N° 2

EXPLICATION 1

Si vous connaissez:
Les caractéristiques électriques et mécaniques requises (y compris militaires)
Et avez besoin de connaître:
La référence du produit approprié.
Premièrement:
Reportez-vous a la page de TABLE OF CONTENTS

a. Recherchez dans la Table des Matières la section technique correspondante au type de systéme connu. EXEMPLE: Section technique **8**

TABLE OF CONTENTS — Page

HOW TO USE THIS BOOK
English I
German VII
French XIII
Spanish XIX
Japanese XXV
COMPONENT LOCATOR XXXI
1. **TYPE NO. CROSS INDEX** 1
2. **VOLTAGE REFERENCE DIODES**
Single-&-Double-Anode Types, $P_D < 5W$ 163
3. **GENERAL-PURPOSE DIODES**
Devices to 1 A 231
4. **HIGH-SPEED DIODES**
Including Switching & Fast Recovery Rectifiers 238
5. **GENERAL-PURPOSE RECTIFIERS**
Devices to 7 kA 274
6. **DIODE ARRAYS & MATRICES**
Array 314
Matrix 315
7. **TRANSIENT SUPPRESSOR DIODES**
Including Unipolar & Bipolar Types 316
POWER DEVICES
8. **STANDARD RECOVERY BRIDGE RECTIFIERS**
Single Phase 360
Three Phase 372
9. **SCHOTTKY RECTIFIERS**
Single, & Dual Center-Tapped Diodes 374
10. **VOLTAGE-REGULATOR DIODES**
$P_D \geq 5$ W 377
11. **HIGH-VOLTAGE RECTIFIERS**
PIV $\geq$ 1 kV 401
12. **MISCELLANEOUS DIODES**
Current Regulator/Limiter 434
Logarithmic-Conversion Diode 435
Matched Configuration 435
Noise Generator 435
Schottky-Barrier Diode 436
UHF Detector 439
UHF Mixer 439
Varistor 439
Additional Diode Devices 444
SUPPLEMENTARY SECTIONS
13. Types With U.S. Military Specifications 429
14. Circuit Drawings 449
15. Outline Drawings 453
MANUFACTURERS PROFILE 635
INTERPRETER – Symbols & Codes Explained DI1
DRAWING INDEX DI12
SPECIAL INSERT
Manufacturers' Sales Offices SOL1

b. Allez à la page de cette section. Trouvez la reference du produit qui correspond globalement à vos caractéristiques requises. EXEMPLE: **SL1505HE.**

A cause du classement séquentiel des genres similaires apparaîtront ensemble.

Notez les paramètres de classement séquentiel dans le coin supérieur à droite de chaque page.

8. STANDARD RECOVERY BRIDGE RECTIFIERS

IN ORDER OF: (1) IO MAX (2) PIV (3) @ TEMP & (4) TYPE NUMBER

LINE No.	4 TYPE NUMBER	2 PIV (V)	MAX AVG FWD DC CURRENT 1 Io MAX (A)	3 @ TEMP (°C)	MAX RATING SURGE CURR PEAK 1 Cy (A)	PULSE WIDTH (s)	MAX. TEMP (°C)	MAT	DRAWING No.
1▼	MP805G	50	8.0	75C	200	8.3m	150	Si	C188e
2	8SB050	50	8.0	80	300	8.3m	150	Si	C216d
3	KBU8A	50	8.0	100C	300	8.3m	150J	Si	M1285
4	BR81	100	8.0	40A	250	8.0m	150S	Si	C219
5	BR81F	100	8.0	50A	250		125A	Si	C219
6	BR81G	100	8.0	50A	250		125A	Si	C219
7▼	DB801T	100	8.0	50A	125	16m	125	Si	M1341
8▼	DB801W	100	8.0	50A	125	16m	125	Si	C219a
9	KBPC801	100	8.0	50C	125	8.3m	125J	Si	C219a†
10	MDA970A2	100	8.0	55C	100		150J	Si△	M1101
11	MB81	100	8.0	75A	25		150	Si	C219j
12	MB81G	100	8.0	75A	125		175	Si	C219j
13▼	MP81	100	8.0	75	200	8.3m	125	Si	C188e
14▼	MP81G	100	8.0	75C	200	8.3m	150	Si	C188e
15	8SB100	100	8.0	80	300	8.3m	150	Si	C216d
16	KBU8B	100	8.0	100C	300	8.3m	150J	Si	M1285
17	BR82	200	8.0	40A	250	8.0m	150S	Si	C219
18	BR82F	200	8.0	50A	250		125A	Si	C219
111	S10A05FR*	50	10	55C	100		150	Si	M1034a
112	SCBH05F*	50	10	55	80		150	Si	C216h
113	SDA165A	50	10	55C	150		125	Si	C216c
114	SDA267A	50	10	55C	125		150C	Si	C216h
115♦	SDA304A	50	10	55C	125	8.3m	150	Si	C218e
116	VJ048X*	50	10	60C	75	8.3m	150J	Si	C216d
117	100JB05L	50	10	65C	130		150A	Si	C218c
118	MB1005	50	10	75H	150		150	Si	C219j
119	MB1005G	50	10	75H	150		175	Si	C219j
120▼	MP1005G	50	10	75C	200	8.3m	150	Si	C188e
121	10SB050	50	10	80	300	8.3m	150	Si	C216d
122	10TB050	50	10	80	400	8.3m	150	Si	C230a
123	dc10.5	50	10.0	80C	125		150A	Si	M1196
124	VJ048*	50	10	80C	100	8.3m	150J	Si	C216d
125	SL1505HE	50	10	100C	65		150A	Si	M1243
126	K850-1	100	10		300			Si	C188f
127▼	SRM10A	100	10					Si	
128	TJ118-1	100	10		300			Si	C224j

Deuxièmement:

Reportez-vous à la page de la section TYPE NUMBER CROSS INDEX.

a. Trouvez la reference du produit choisie **SL1505HE**

b. Notez le/les codes de fabricants à droite du numéro de dispositif. EXEMPLE: **SEN**

c. Notez les numéros de page et de ligne. EXEMPLE: **367-125**

1. TYPE No. CROSS INDEX

IN TYPE NUMBER SEQUENCE

TYPE No.	MFRS	Pg&Line	TYPE No.	MFRS	Pg&Line	TYPE No.	MFRS	Pg&Line	TYPE No.	MFRS	Pg&Line	TYPE No.	MFRS	Pg&Line
SKN26/16	♦SEKG	412 -125	SKR2M240/08	♦SEKG	309 - 81	SKXA150M	♦SEKG	433 -198	SLC64A	♦SCN	353 - 96	SLD1.5TS	♦SOD	411 - 47
SKN45/02	♦SEKG	302 -164	SKR2M240/10	♦SEKG	404 -134	SKXA150N	♦SEKG	433 -199	SLC70	♦SCN	353 - 97	SLD1.5U	♦SOD	411 - 53
SKN45/04	♦SEKG	302 -200	SKR2M240/12	♦SEKG	408 - 8	SKXA75000	♦SEKG	433 -120	SLC70A	♦SCN	353 - 98	SLD1.5V	♦SOD	411 - 48
SKN45/08	♦SEKG	303 - 23	SKR3F2/10	♦SEKG	261 -124	SL8	CODI	425 -219	SLC75	♦SCN	353 - 99	SLD1.6S	♦SOD	412 - 23
SKN45/12	♦SEKG	407 - 51	SKR3F2/12	♦SEKG	261 -155	SL10	CODI	427 - 22	SLC75A	♦SCN	353 -100	SLD1.8T	♦SOD	413 -205
SKN45/14	♦SEKG	409 -163	SKR3F20/06	♦SEKG	260 -212	SL15	CODI	429 - 24	SLC80	♦SCN	353 -101	SLD1.8TS	♦SOD	413 -206
SKN45/16	♦SEKG	412 -151	SKR3F20/08	♦SEKG	261 - 67	SL20	CODI	430 -116	SLC80A	♦SCN	353 -102	SLD2	♦SOD	415 - 56
SKN46/02	♦SEKG	302 -165	SKR3F20/10	♦SEKG	261 -125	SL25	CODI	431 - 90	SLC90	♦SCN	353 -103	SLD2S	♦SOD	415 - 21
SKN46/04	♦SEKG	302 -201	SKR3F20/12	♦SEKG	261 -126	SL30	CODI	432 - 33	SLC90A	♦SCN	353 -104	SLD2U	♦SOD	415 - 27
SKN46/08	♦SEKG	303 - 24	SKR4F20/02	♦SEKG	239 - 91	SL45	CODI	432 -216	[illegible]00	♦SCN	353 -105	SLD2V	♦SOD	415 - 22
SKN46/12	♦SEKG	407 - 52	SKR4F20/04	♦SEKG	239 -185	SL1505HE	♦SEN	367 -125	[illegible]00A	♦SCN	353 -106	SLD2.4S	♦SOD	417 - 1
SKN46/14	♦SEKG	409 -164	SKR4F20/06	♦SEKG	240 - 38	SL1510FR	♦SEN	368 -122	[illegible]10	♦SCN	353 -107	SLD2.4T	♦SOD	417 - 2
SKN46/16	♦SEKG	412 -152	SKR4F40/02	♦SEKG	239 - 92	SL1510HE	♦SEN	367 -158	SLC110A	♦SCN	353 -108	SLD2.4TS	♦SOD	417 - 3
SKN70/02	♦SEKG	305 -163	SKR4F40/04	♦SEKG	239 -186	SL1515HE	♦SEN	367 -160	SLC120	♦SCN	353 -109	SLD2.4V	♦SOD	417 - 4
SKN70/04	♦SEKG	305 -167	SKR4F40/06	♦SEKG	240 - 39	SL1520	♦SEN	369 - 25	SLC120A	♦SCN	353 -110	SLD2.8S	♦SOD	418 -161

d. Allez à la page de la section MANUFACTURERS CODES AND NAMES.

e. Trouvez le nom et le code du fabricant. EXEMPLE: **SEN**

MANUFACTURERS' CODES & NAMES

D.A.T.A. MFRS.' CODE		MANUFACTURERS
IMTM		Industria Mexicana Toshiba
INC		International Components Corp.
INL		Intersil, Inc.
INR		International Rectifier Corp.
INRI		International Rectifier Corp.
INRJ		International Rectifier Corp.
ITTG	*	ITT Semiconductors Intermetall
KSI	*	Knox Semiconductor, Inc.
LAM		Lambda Semiconductors
LTE		Lansdale Transistor & Electronics,
SCN	*	Semicon Components, Inc.
SDI		SDI, Inc.
SEKG	*	Semikron Int'l, Inc.
SELI		Semiconductors, Ltd.
SEN		Sensitron Semiconductor, Div.
SES	*	Semitronics Corp.
SET	*	Semtech Corp.
SGSI		SGS-ATES Componenti Elet. SPA
SHEJ		Shindengen Elect. Mfg. Co., Ltd.
SIEG		Siemens Aktiengesellschaft

EXPLICATION 2

Si vous connaissez:
La reference du produit
Et avez besoin de connaître:
Les caractéristiques électriques
Premièrement:
Allez à la page du TYPE NUMBER CROSS INDEX et trouvez votre référence du produit.

a. Notez les numéros de page et de ligne en plus du genre. EXEMPLE: **367-125**

1. TYPE No. CROSS INDEX

IN TYPE NUMBER SEQUENCE

TYPE No.	MFRS	Pg&Line	TYPE No.	MFRS	Pg&Line	TYPE No.	MFRS	Pg&Line	TYPE No.	MFRS	Pg&Line	TYPE No.	MFRS	Pg&Line
SKN26/16	♦SEKG	412 -125	SKR2M240/08	♦SEKG	309 - 81	SKXA150M	♦SEKG	433 -198	SLC64A	♦SCN	353 - 96	SLD1.5TS	♦SOD	411 - 47
SKN45/02	♦SEKG	302 -164	SKR2M240/10	♦SEKG	404 -134	SKXA150N	♦SEKG	433 -199	SLC70	♦SCN	353 - 97	SLD1.5U	♦SOD	411 - 53
SKN45/04	♦SEKG	302 -200	SKR2M240/12	♦SEKG	408 - 8	SKXA75000	♦SEKG	433 -120	SLC70A	♦SCN	353 - 98	SLD1.5V	♦SOD	411 - 48
SKN45/08	♦SEKG	303 - 23	SKR3F2/10	♦SEKG	261 -124	SL8	CODI	425 -219	SLC75	♦SCN	353 - 99	SLD1.6S	♦SOD	412 - 23
SKN45/12	♦SEKG	407 - 51	SKR3F2/12	♦SEKG	261 -155	SL10	CODI	427 - 22	SLC75A	♦SCN	353 -100	SLD1.8T	♦SOD	413 -205
SKN45/14	♦SEKG	409 -163	SKR3F20/06	♦SEKG	260 -212	SL15	CODI	429 - 24	SLC80	♦SCN	353 -101	SLD1.8TS	♦SOD	413 -206
SKN45/16	♦SEKG	412 -151	SKR3F20/08	♦SEKG	261 - 67	SL20	CODI	430 -116	SLC80A	♦SCN	353 -102	SLD2	♦SOD	415 - 56
SKN46/02	♦SEKG	302 -165	SKR3F20/10	♦SEKG	261 -125	SL25	CODI	431 - 90	SLC90	♦SCN	353 -103	SLD2S	♦SOD	415 - 21
SKN46/04	♦SEKG	302 -201	SKR3F20/12	♦SEKG	261 -126	SL30	CODI	432 - 33	SLC90A	♦SCN	353 -104	SLD2U	♦SOD	415 - 27
SKN46/08	♦SEKG	303 - 24	SKR4F20/02	♦SEKG	239 - 91	SL45	CODI	432 -216	[illegible]00	♦SCN	353 -105	SLD2V	♦SOD	415 - 22
SKN46/12	♦SEKG	407 - 52	SKR4F20/04	♦SEKG	239 -185	SL1505HE	♦SEN	367 -125	[illegible]00A	♦SCN	353 -106	SLD2.4S	♦SOD	417 - 1
SKN46/14	♦SEKG	409 -164	SKR4F20/06	♦SEKG	240 - 38	SL1510FR	♦SEN	368 -122	[illegible]10	♦SCN	353 -107	SLD2.4T	♦SOD	417 - 2
SKN46/16	♦SEKG	412 -152	SKR4F40/02	♦SEKG	239 - 92	SL1510HE	♦SEN	367 -158	SLC110A	♦SCN	353 -108	SLD2.4TS	♦SOD	417 - 3
SKN70/02	♦SEKG	305 -163	SKR4F40/04	♦SEKG	239 -186	SL1515HE	♦SEN	367 -160	SLC120	♦SCN	353 -109	SLD2.4V	♦SOD	417 - 4
SKN70/04	♦SEKG	305 -167	SKR4F40/06	♦SEKG	240 - 39	SL1520	♦SEN	369 - 25	SLC120A	♦SCN	353 -110	SLD2.8S	♦SOD	418 -161

b. Localisez ces numéros de page et de ligne et vous trouverez les caractéristiques électriques. Les numéros de schéma d'encombrement et de circuit **M1243** sont situés dans la dernière colonne et sont inscrits successivement dans le "Drawing Index". (Voir à la Table des Matières.)

8. STANDARD RECOVERY BRIDGE RECTIFIERS

IN ORDER OF: (1) IO MAX (2) PIV (3) @ TEMP & (4) TYPE NUMBER

LINE No.	4 TYPE NUMBER	2 PIV (V)	MAX AVG FWD DC CURRENT 1 Io MAX (A)	3 @ TEMP (°C)	MAX RATING SURGE CURR PEAK 1 Cy (A)	PULSE WIDTH (s)	MAX. TEMP (°C)	MAT	DRAWING No.	LINE No.	4 TYPE NUMBER	2 PIV (V)	MAX AVG FWD DC CURRENT 1 Io MAX (A)	3 @ TEMP (°C)	MAX RATING SURGE CURR PEAK 1 Cy (A)	PULSE WIDTH (s)	MAX. TEMP (°C)	MAT	DRAWING No.
1▼	MP805G	50	8.0	75C	200	8.3m	150	Si	C188e	111	S10A05FR*	50	10	55C	100		150	Si	M1034a
2	8SB050	50	8.0	80	300	8.3m	150	Si	C216d	112	SCBH05F*	50	10	55	80		150	Si	C216h
3	KBU8A	50	8.0	100C	300	8.3m	150J	Si	M1285	113	SDA165A	50	10	55C	150		125	Si	C216c
4	BR81	100	8.0	40A	250	8.0m	150S	Si	C219	114	SDA267A	50	10	55C	125		150C	Si	C216h
5	BR81F	100	8.0	50A	250		125A	Si	C219	115♦	SDA304A	50	10	55C	125	8.3m	150	Si	C218e
6	BR81G	100	8.0	50A	250		125A	Si	C219	116	VJ048X*	50	10	60C	75	8.3m	150J	Si	C216d
7▼	DB801T	100	8.0	50A	125	16m	125	Si	M1341	117	100JB05L	50	10	65C	130		150A	Si	C218c
8▼	DB801W	100	8.0	50A	125	16m	125	Si	C219a	118	MB1005	50	10	75H	150		150	Si	C219j
9	KBPC801	100	8.0	50C	125	8.3m	125J	Si	C219a†	119	MB1005G	50	10	75H	150		175	Si	C219j
10	MDA970A2	100	8.0	55C	100		150J	Si△	M1101	120▼	MP1005G	50	10	75C	200	8.3m	150	Si	C188e
11	MB81	100	8.0	75A	25		150	Si	C219j	121	10SB050	50	10	80	300	8.3m	150	Si	C216d
12	MB81G	100	8.0	75A	125		175	Si	C219j	122	10TB050	50	10	80	400	8.3m	150	Si	C230a
13▼	MP81	100	8.0	75	200	8.3m	125	Si	C188e	123	dc10.5	50	10.0	80C	125		150A	Si	M1196
14▼	MP81G	100	8.0	75C	200	8.3m	150	Si	C188e	124	VJ048*	50	10	80C	100	8.3m	150J	Si	C216d
15	8SB100	100	8.0	80	300	8.3m	150	Si	C216d	125	SL1505HE	50	10	100C	65		150A	Si	M1243
16	KBU8B	100	8.0	100C	300	8.3m	150J	Si	M1285	126	K850-1	100	10		300			Si	C188f
17	BR82	200	8.0	40A	250	8.0m	150S	Si	C219	127▼	SRM10A	100	10					Si	
18	BR82F	200	8.0	50A	250		125A	Si	C219	128	TJ118-1	100	10		300			Si	C224j

c. Localisez le numéro de schéma d'encombrement dans le "Outline Drawing Index" et notez le numéro de la page inscrit. EXEMPLE: **M1243**

DRAWING INDEX – DIODE DEVICES

OUTLINE DRAWINGS

DRAWING NO.	PAGE	DRAWING NO.	PAGE	DRAWING NO.	PAGE	DRAWING NO.	PAGE	DRAWING NO.	PAGE	DRAWING NO.	PAGE	DRAWING NO.	PAGE
M1112	553	M1186a	562	M1238	572	M1290	582	M1352	594	S65a	601	S305	606
M1115	553	M1187	562	M1239	572	M1291	582	M1353	594	S66	601	S322	606
M1116	553	M1188	562	M1240	572	M1292	582	M1354	594	S66a-c	601	S322a-c	606
M1117	553	M1188a-b	563	M1241	573	M1293	583	M1355	594	S67	601	S324	606
M1118	554	M1189	563	M1242	573	M1294	583	M1356	594	S67a	601	S329	606
M1119a-i	554	M1190	56[illegible]	M1243	573	M1295	584	M1357	594	S68	601	S339	606

d. Allez à la page indiquée et localisez le schéma.

OUTLINE DRAWINGS

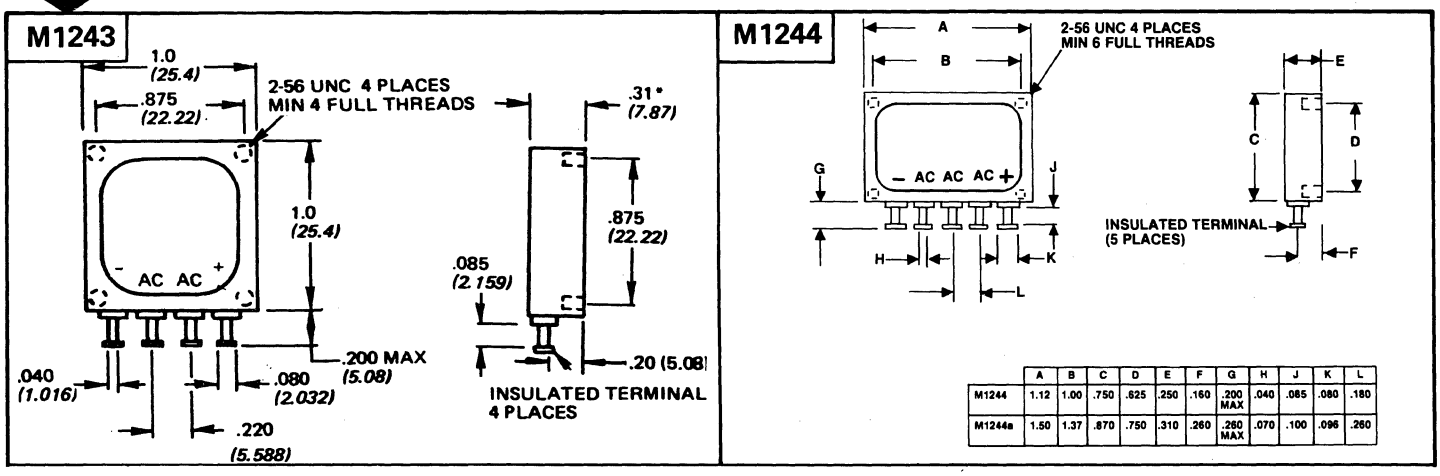

	A	B	C	D	E	F	G	H	J	K	L
M1244	1.12	1.00	.750	.625	.250	.160	.200 MAX	.040	.085	.080	.180
M1244a	1.50	1.37	.870	.750	.310	.260	.260 MAX	.070	.100	.096	.260

N.B.: Les symboles et les codes utilisés dans ces sections techniques sont expliqués dans les pages "Interpreter" à la fin du livre.

DEFINITION DES TERMES

INTERPRETATIONS ET DEFINITIONS

Cette section définit les têtes de colonnes et les symboles qui apparaissent dans les sections techniques du livre. Classées alphabétiquement selon la description du domaine d'applications, les "Column Definitions" interprètent les titres des domaines d'applications et indiquent l'usage de la section.

SECTION 8 STANDARD RECOVERY BRIDGE RECTIFIERS SECTION 8

LINE No.	4 TYPE NO.	2 PIV (V)	MAX AVG FWD DC CURRENT 1 Io (A)	3 @ TEMP (°C)	MAX RATING SURGE CURR PEAK 1 Cy (A)	PULSE WIDTH (s)	MAX. TEMP (°C)	DESCRIPTION MAT	DRAWING No.
✪	✪	2	3	4	5	6	8	✪	10

2 – Also listed in Section 6 under Radiation Resistant Device (Use 9) (also see above)
* – Three-Phase Bridge

3 $ – Max. cont. working voltage (PIV not specified)
% – Max. non-repetitive peak transient reverse voltage

5 (Value given indicates temp. at which derating starts, unless otherwise indicated)
$ – Temperature at which derating starts is not specified.
A – Ambient
B – Base or stud
C – Case
H – Heat Sink
J – Junction
L – Lead
S – Storage

8 A – Ambient
B – Base or stud
C – Case
J – Junction
L – Lead
S – Storage

10 ⊡ – Available with reverse polarity; consult manufacturer
♦ – Single Operation

INTERPRETATIONS (Voir aussi: Symboles et Codes)

SYMBOLES: Les symboles tels que #, ▲, et $ sont utilisés dans toutes les colonnes, que ce soit de valeurs numériques ou autres, chaque fois que les entrées de données diffèrent d'une certaine façon de l'entité définie dans la tête de colonne. Par exemple, si une tête de colonne particulière spécifie "MAX Power (in Watts)" et que la valeur numérique inscrite pour un produit particulier correspond au lieu de cela à la puissance minimale, la variation est signalée par l'apparition d'un symbole spécial à côté de la valeur numérique.

CODES: Des codes sont utilisés dans certaines colonnes de façon à abréger les données qui sont entrées. Les codes peuvent être alphabétiques (A, B, C etc. . .) ou numériques (1, 2, 3 etc. . .) ou bien une combinaison des deux.

N.B.: Les symboles et les codes utilisés ici sont expliqués dans les pages "Interpreter" à la fin ou au début du livre.

MULTIPLICATEURS POUR LES PUISSANCES DE DIX

Les multiplicateurs pour les puissances de dix indiqués ci-après sont utilisés dans les colonnes numériques quand la valeur à inscrire est beaucoup plus grande ou beaucoup plus petite que celle qui peut être inscrite selon l'unité de mesure indiquée dans la tête de colonne. Normalement cette dernière est ce que l'on appelle l'unité de base: telle que V (volts), A (ampères), s (secondes). La liste des multiplicateurs ainsi que l'explication de leur emploi sont données ci-après:

EXPLICATION

Valeurs des données à inscrire	Unité de base dans la tête de colonne.	Entrée inscrite
3 milliamperes	A (amperes)	3.0m
9 megaohms	Ω (ohms)	9.0M
0.5 volt	V (volts)	500m*
10 amperes	A (amperes)	10

*peut aussi être écrit ainsi: 0.5 sans multiplicateur

MULTIPLICATEURS

Puissance	Préfixe	Symbole
10^{12}	tera	T
10^{9}	giga	G
10^{6}	mega	M
10^{3}	kilo	k
10^{-3}	milli	m
10^{-6}	micro	μ
10^{-9}	nano	n
10^{-12}	pico	p
10^{-15}	femto	f
10^{-18}	atto	a

PARAMETRES DE CLASSEMENT SEQUENTIEL

Le classement des produits dans les sections techniques est lié à un groupement de caractéristiques spéciales choisies selon leur importance parmi le groupe général de caractéristiques classifié dans chaque section. Ces caractéristiques choisies ou ces paramètres de classement séquentiel diffèrent d'une section à l'autre, et sont identifiés au début de chaque page comme indiqué dans l'exemple ci-après.

Les différents produits à l'intérieur d'une section sont d'abord classés selon un ordre numérique (ou alphabétique) croissant pour le premier des paramètres. Les groupes de produits ayant une valeur commune pour le premier paramètre sont alors classés selon un ordre croissant pour le deuxième paramètre. Ce procédé continue pour chaque paramètre successif jusqu'à et y compris le dernier paramètre qui dans chaque cas est lui-même la reference du produit. Le classement final, par reference du produit est fait selon le classement séquentiel des reference du produit dans la table des renvois. L'absence d'une entrée pour n'importe quel paramètre de classement séquentiel est considérée comme étant un zéro et précède toutes les entrées actuelles dans le classement séquentiel.

MAJOR CHARACTERISTICS — SEQUENCING PARAMETERS

IN ORDER OF: (1) IO MAX (2) PIV (3) @ TEMP & (4) TYPE NUMBER

8. STANDARD RECOVERY BRIDGE RECTIFIERS

LINE No.	4 TYPE NUMBER	2 PIV (V)	MAX AVG FWD DC CURRENT 1 Io MAX (A)	3 @ TEMP (°C)	MAX RATING SURGE CURR PEAK 1 Cy (A)	PULSE WIDTH (s)	MAX. TEMP (°C)	MAT	DRAWING No.	LINE No.	4 TYPE NUMBER	2 PIV (V)	MAX AVG FWD DC CURRENT 1 Io MAX (A)	3 @ TEMP (°C)	MAX RATING SURGE CURR PEAK 1 Cy (A)	PULSE WIDTH (s)	MAX. TEMP (°C)	MAT	DRAWING No.
1▼	MP805G	50	8.0	75C	200	8.3m	150	Si	C188e	111	S10A05FR*	50	10	55C	100		150	Si	M1034a
2	8SB050	50	8.0	80	300	8.3m	150	Si	C216d	112	SCBH05F*	50	10	55	80		150	Si	C216h
3	KBU8A	50	8.0	100C	300	8.3m	150J	Si	M1285	113	SDA165A	50	10	55C	150		125	Si	C216c
4	BR81	100	8.0	40A	250	8.0m	150S	Si	C219	114	SDA267A	50	10	55C	125		150C	Si	C216h
5	BR81F	100	8.0	50A	250		125A	Si	C219	115♦	SDA304A	50	10	55C	125	8.3m	150	Si	C218e
6	BR81G	100	8.0	50A	250		125A	Si	C219	116	VJ048X*	50	10	60C	75	8.3m	150J	Si	C216d
7▼	DB801T	100	8.0	50A	125	16m	125	Si	M1341	117	100JB05L	50	10	65C	130		150A	Si	C218c
8▼	DB801W	100	8.0	50A	125	16m	125	Si	C219a	118	MB1005	50	10	75H	150		150	Si	C219j
9	KBPC801	100	8.0	50C	125	8.3m	125J	Si	C219a†	119	MB1005G	50	10	75H	150		175	Si	C219j

2 MODOS BASICOS:

	Si conoce:	Y necesita saber:	Lea:
1	Los requerimientos eléctricos y mecánicos	Un número de tipo (Número de parte del fabricante)	Explicación 1
2	Un número de tipo	Las características eléctricas y/o mecánicas o su circuito y configuración de trazo o el fabricante o un tipo equivalente	Explicación 2

EXPLICACION 1

Si conoce:
Los requerimientos eléctricos y mecánicos (inclusive los militares)
Y necesita saber:
Un número de tipo adecuado
Primero:
Refiérase a la Sección TABLE OF CONTENTS

a. Seleccione del Contenido la Sección Técnica correspondiente al tipo conocido de la parte. EJEMPLO: Sección Técnica **8**

TABLE OF CONTENTS — Page

HOW TO USE THIS BOOK
English I
German VII
French XIII
Spanish XIX
Japanese XXV
COMPONENT LOCATOR XXXI
1. **TYPE NO. CROSS INDEX** 1
2. **VOLTAGE REFERENCE DIODES**
Single-&-Double-Anode Types, $P_D < 5W$ 163
3. **GENERAL-PURPOSE DIODES**
Devices to 1 A 231
4. **HIGH-SPEED DIODES**
Including Switching & Fast Recovery Rectifiers 238
5. **GENERAL-PURPOSE RECTIFIERS**
Devices to 7 kA 274
6. **DIODE ARRAYS & MATRICES**
Array 314
Matrix 315
7. **TRANSIENT SUPPRESSOR DIODES**
Including Unipolar & Bipolar Types 316
POWER DEVICES
8. **STANDARD RECOVERY BRIDGE RECTIFIERS**
Single Phase 360
Three Phase 372
9. **SCHOTTKY RECTIFIERS**
Single, & Dual Center-Tapped Diodes 374
10. **VOLTAGE-REGULATOR DIODES**
$P_D \geq 5$ W 377
11. **HIGH-VOLTAGE RECTIFIERS**
PIV $\geq$ 1 kV 401
12. **MISCELLANEOUS DIODES**
Current Regulator/Limiter 434
Logarithmic-Conversion Diode 435
Matched Configuration 435
Noise Generator 435
Schottky-Barrier Diode 436
UHF Detector 439
UHF Mixer 439
Varistor 439
Additional Diode Devices 444
SUPPLEMENTARY SECTIONS
13. Types With U.S. Military Specifications 429
14. Circuit Drawings 449
15. Outline Drawings 453
MANUFACTURERS PROFILE 635
INTERPRETER – Symbols & Codes Explained DI1
DRAWING INDEX DI12
SPECIAL INSERT
Manufacturers' Sales Offices SOL1

b. Refiérase a esa Sección. Localice el número de tipo que concuerde en general con sus requerimientos. EJEMPLO: **SL1505HE.**

Debido al orden en secuencia, los tipos similares aparecerán juntos.

Nótense los parámetros secuenciales en la esquina superior derecha de cada página.

8. STANDARD RECOVERY BRIDGE RECTIFIERS

IN ORDER OF: (1) IO MAX (2) PIV (3) @ TEMP & (4) TYPE NUMBER

LINE No.	4 TYPE NUMBER	2 PIV (V)	MAX AVG FWD DC CURRENT 1 Io MAX (A)	3 @ TEMP (°C)	MAX RATING SURGE CURR PEAK 1 Cy (A)	PULSE WIDTH (s)	MAX. TEMP (°C)	MAT	DRAWING No.
1▼	MP805G	50	8.0	75C	200	8.3m	150	Si	C188e
2	8SB050	50	8.0	80	300	8.3m	150	Si	C216d
3	KBU8A	50	8.0	100C	300	8.3m	150J	Si	M1285
4	BR81	100	8.0	40A	250	8.0m	150S	Si	C219
5	BR81F	100	8.0	50A	250		125A	Si	C219
6	BR81G	100	8.0	50A	250		125A	Si	C219
7▼	DB801T	100	8.0	50A	125	16m	125	Si	M1341
8▼	DB801W	100	8.0	50A	125	16m	125	Si	C219a
9	KBPC801	100	8.0	50C	125	8.3m	125J	Si	C219a†
10	MDA970A2	100	8.0	55C	100		150J	Si△	M1101
11	MB81	100	8.0	75A	25		150	Si	C219j
12	MB81G	100	8.0	75A	125		175	Si	C219j
13▼	MP81	100	8.0	75	200	8.3m	125	Si	C188e
14▼	MP81G	100	8.0	75C	200	8.3m	150	Si	C188e
15	8SB100	100	8.0	80	300	8.3m	150	Si	C216d
16	KBU8B	100	8.0	100C	300	8.3m	150J	Si	M1285
17	BR82	200	8.0	40A	250	8.0m	150S	Si	C219
18	BR82F	200	8.0	50A	250		125A	Si	C219

LINE No.	4 TYPE NUMBER	2 PIV (V)	MAX AVG FWD DC CURRENT 1 Io MAX (A)	3 @ TEMP (°C)	MAX RATING SURGE CURR PEAK 1 Cy (A)	PULSE WIDTH (s)	MAX. TEMP (°C)	MAT	DRAWING No.
111	S10A05FR*	50	10	55C	100		150	Si	M1034a
112	SCBH05F*	50	10	55	80		150	Si	C216h
113	SDA165A	50	10	55C	150		125	Si	C216c
114	SDA267A	50	10	55C	125		150C	Si	C216h
115♦	SDA304A	50	10	55C	125	8.3m	150	Si	C218e
116	VJ048X*	50	10	60C	75	8.3m	150J	Si	C216d
117	100JB05L	50	10	65C	130		150A	Si	C218c
118	MB1005	50	10	75H	150		150	Si	C219j
119	MB1005G	50	10	75H	150		175	Si	C219j
120▼	MP1005G	50	10	75C	200	8.3m	150	Si	C188e
121	10SB050	50	10	80	300	8.3m	150	Si	C216d
122	10TB050	50	10	80	400	8.3m	150	Si	C230a
123	dc10.5	50	10.0	80C	125		150A	Si	M1196
124	VJ048*	50	10	80C	100	8.3m	150J	Si	C216d
125	SL1505HE	50	10	100C	65		150A	Si	M1243
126	K850-1	100	10		300			Si	C188f
127▼	SRM10A	100	10					Si	
128	TJ118-1	100	10		300			Si	C224j

Segundo:

Refiérase a la Sección TYPE NUMBER CROSS INDEX

a. Encuentre su número de tipo seleccionado **SL1505HE**

b. Note el (los) código(s) a la derecha del número de parte. EJEMPLO: **SEN**

c. Note el número de página y línea. EJEMPLO: **367-125**

1. TYPE No. CROSS INDEX

IN TYPE NUMBER SEQUENCE

TYPE No.	MFRS	Pg&Line	TYPE No.	MFRS	Pg&Line	TYPE No.	MFRS	Pg&Line	TYPE No.	MFRS	Pg&Line	TYPE No.	MFRS	Pg&Line
SKN26/16	♦SEKG	412 -125	SKR2M240/08	♦SEKG	309 - 81	SKXA150M	♦SEKG	433 -198	SLC64A	♦SCN	353 - 96	SLD1.5TS	♦SOD	411 - 47
SKN45/02	♦SEKG	302 -164	SKR2M240/10	♦SEKG	404 -134	SKXA150N	♦SEKG	433 -199	SLC70	♦SCN	353 - 97	SLD1.5U	♦SOD	411 - 53
SKN45/04	♦SEKG	302 -200	SKR2M240/12	♦SEKG	408 - 8	SKXA75000	♦SEKG	433 -120	SLC70A	♦SCN	353 - 98	SLD1.5V	♦SOD	411 - 48
SKN45/08	♦SEKG	303 - 23	SKR3F2/10	♦SEKG	261 -124	SL8	CODI	425 -219	SLC75	♦SCN	353 - 99	SLD1.6S	♦SOD	412 - 23
SKN45/12	♦SEKG	407 - 51	SKR3F2/12	♦SEKG	261 -155	SL10	CODI	427 - 22	SLC75A	♦SCN	353 -100	SLD1.8T	♦SOD	413 -205
SKN45/14	♦SEKG	409 -163	SKR3F20/06	♦SEKG	260 -212	SL15	CODI	429 - 24	SLC80	♦SCN	353 -101	SLD1.8TS	♦SOD	413 -206
SKN45/16	♦SEKG	412 -151	SKR3F20/08	♦SEKG	261 - 67	SL20	CODI	430 -116	SLC80A	♦SCN	353 -102	SLD2	♦SOD	415 - 56
SKN46/02	♦SEKG	302 -165	SKR3F20/10	♦SEKG	261 -125	SL25	CODI	431 - 90	SLC90	♦SCN	353 -103	SLD2S	♦SOD	415 - 21
SKN46/04	♦SEKG	302 -201	SKR3F20/12	♦SEKG	261 -126	SL30	CODI	432 - 33	SL[illegible]90A	♦SCN	353 -104	SLD2U	♦SOD	415 - 27
SKN46/08	♦SEKG	303 - 24	SKR4F20/02	♦SEKG	239 - 91	SL45	CODI	432 -216	[illegible]00	♦SCN	353 -105	SLD2V	♦SOD	415 - 22
SKN46/12	♦SEKG	407 - 52	SKR4F20/04	♦SEKG	239 -185	SL1505HE	♦SEN	367 -125	[illegible]00A	♦SCN	353 -106	SLD2.4S	♦SOD	417 - 1
SKN46/14	♦SEKG	409 -164	SKR4F20/06	♦SEKG	240 - 38	SL1510FR	♦SEN	368 -122	[illegible]10	♦SCN	353 -107	SLD2.4T	♦SOD	417 - 2
SKN46/16	♦SEKG	412 -152	SKR4F40/02	♦SEKG	239 - 92	SL1510HE	♦SEN	367 -158	SL[illegible]110A	♦SCN	353 -108	SLD2.4TS	♦SOD	417 - 3
SKN70/02	♦SEKG	305 -163	SKR4F40/04	♦SEKG	239 -186	SL1515HE	♦SEN	367 -160	SLC120	♦SCN	353 -109	SLD2.4V	♦SOD	417 - 4
SKN70/04	♦SEKG	305 -167	SKR4F40/06	♦SEKG	240 - 39	SL1520	♦SEN	369 - 25	SLC120A	♦SCN	353 -110	SLD2.8S	♦SOD	418 -161

d. Refiérase a la Sección MANUFACTURERS' CODES & NAMES.

e. Localice el código y nombre del fabricante. EJEMPLO: **SEN**

MANUFACTURERS' CODES & NAMES

D.A.T.A. MFRS.' CODE		MANUFACTURERS
IMTM		Industria Mexicana Toshiba
INC		International Components Corp.
INL		Intersil, Inc.
INR		International Rectifier Corp.
INRI		International Rectifier Corp.
INRJ		International Rectifier Corp.
ITTG	*	ITT Semiconductors Intermetall
KSI	*	Knox Semiconductor, Inc.
LAM		Lambda Semiconductors
LTE		Lansdale Transistor & Electronics,

D.A.T.A. MFRS.' CODE		MANUFACTURERS
SCN	*	Semicon Components, Inc.
SDI		SDI, Inc.
SEKG	*	Semikron Int'l, Inc.
SELI		Semiconductors, Ltd.
SEN		Sensitron Semiconductor, Div.
SES	*	Semitronics Corp.
SET	*	Semtech Corp.
SGSI		SGS-ATES Componenti Elet. SPA
SHEJ		Shindengen Elect. Mfg. Co., Ltd.
SIEG		Siemens Aktiengesellschaft

EXPLICACION 2

Si conoce:
El número de tipo
Y necesita saber:
Las características eléctricas
Primero:
Refiérase a la sección TYPE NUMBER CROSS INDEX y encuentre su número de tipo.

a. Note el número de página y línea al lado de su tipo. EJEMPLO: **367-125**

1. TYPE No. CROSS INDEX

IN TYPE NUMBER SEQUENCE

TYPE No.	MFRS	Pg&Line	TYPE No.	MFRS	Pg&Line	TYPE No.	MFRS	Pg&Line	TYPE No.	MFRS	Pg&Line	TYPE No.	MFRS	Pg&Line
SKN26/16	♦SEKG	412 -125	SKR2M240/08	♦SEKG	309 - 81	SKXA150M	♦SEKG	433 -198	SLC64A	♦SCN	353 - 96	SLD1.5TS	♦SOD	411 - 47
SKN45/02	♦SEKG	302 -164	SKR2M240/10	♦SEKG	404 -134	SKXA150N	♦SEKG	433 -199	SLC70	♦SCN	353 - 97	SLD1.5U	♦SOD	411 - 53
SKN45/04	♦SEKG	302 -200	SKR2M240/12	♦SEKG	408 - 8	SKXA75000	♦SEKG	433 -120	SLC70A	♦SCN	353 - 98	SLD1.5V	♦SOD	411 - 48
SKN45/08	♦SEKG	303 - 23	SKR3F2/10	♦SEKG	261 -124	SL8	CODI	425 -219	SLC75	♦SCN	353 - 99	SLD1.6S	♦SOD	412 - 23
SKN45/12	♦SEKG	407 - 51	SKR3F2/12	♦SEKG	261 -155	SL10	CODI	427 - 22	SLC75A	♦SCN	353 -100	SLD1.8T	♦SOD	413 -205
SKN45/14	♦SEKG	409 -163	SKR3F20/06	♦SEKG	260 -212	SL15	CODI	429 - 24	SLC80	♦SCN	353 -101	SLD1.8TS	♦SOD	413 -206
SKN45/16	♦SEKG	412 -151	SKR3F20/08	♦SEKG	261 - 67	SL20	CODI	430 -116	SLC80A	♦SCN	353 -102	SLD2	♦SOD	415 - 56
SKN46/02	♦SEKG	302 -165	SKR3F20/10	♦SEKG	261 -125	SL25	CODI	431 - 90	SLC90	♦SCN	353 -103	SLD2S	♦SOD	415 - 21
SKN46/04	♦SEKG	302 -201	SKR3F20/12	♦SEKG	261 -126	SL30	CODI	432 - 33	SLC90A	♦SCN	353 -104	SLD2U	♦SOD	415 - 27
SKN46/08	♦SEKG	303 - 24	SKR4F20/02	♦SEKG	239 - 91	SL45	CODI	432 -216	SLC100	♦SCN	353 -105	SLD2V	♦SOD	415 - 22
SKN46/12	♦SEKG	407 - 52	SKR4F20/04	♦SEKG	239 -185	SL1505HE	♦SEN	367 -125	SLC100A	♦SCN	353 -106	SLD2.4S	♦SOD	417 - 1
SKN46/14	♦SEKG	409 -164	SKR4F20/06	♦SEKG	240 - 38	SL1510FR	♦SEN	368 -122	SLC110	♦SCN	353 -107	SLD2.4T	♦SOD	417 - 2
SKN46/16	♦SEKG	412 -152	SKR4F40/02	♦SEKG	239 - 92	SL1510HE	♦SEN	367 -158	SLC110A	♦SCN	353 -108	SLD2.4TS	♦SOD	417 - 3
SKN70/02	♦SEKG	305 -163	SKR4F40/04	♦SEKG	239 -186	SL1515HE	♦SEN	367 -160	SLC120	♦SCN	353 -109	SLD2.4V	♦SOD	417 - 4
SKN70/04	♦SEKG	305 -167	SKR4F40/06	♦SEKG	240 - 39	SL1520	♦SEN	369 - 25	SLC120A	♦SCN	353 -110	SLD2.8S	♦SOD	418 -161

b. Localice ese número de página y línea y encontrará las caracteristicas eléctricas. El número del dibujo esquematico M1243 está en la última columna y los dibujos se enumeran en secuencia en el "Drawing Index." (Véase el Contenido.)

8. STANDARD RECOVERY BRIDGE RECTIFIERS

IN ORDER OF: (1) IO MAX (2) PIV (3) @ TEMP & (4) TYPE NUMBER

LINE No.	4 TYPE NUMBER	2 PIV (V)	MAX AVG FWD DC CURRENT 1 Io MAX (A)	3 @ TEMP (°C)	MAX RATING SURGE CURR PEAK 1 Cy (A)	PULSE WIDTH (s)	MAX. TEMP (°C)	MAT	DRAWING No.	LINE No.	4 TYPE NUMBER	2 PIV (V)	MAX AVG FWD DC CURRENT 1 Io MAX (A)	3 @ TEMP (°C)	MAX RATING SURGE CURR PEAK 1 Cy (A)	PULSE WIDTH (s)	MAX. TEMP (°C)	MAT	DRAWING No.
1▼	MP805G	50	8.0	75C	200	8.3m	150	Si	C188e	111	S10A05FR*	50	10	55C	100		150	Si	M1034a
2	8SB050	50	8.0	80	300	8.3m	150	Si	C216d	112	SCBH05F*	50	10	55	80		150	Si	C216h
3	KBU8A	50	8.0	100C	300	8.3m	150J	Si	M1285	113	SDA165A	50	10	55C	150		125	Si	C216c
4	BR81	100	8.0	40A	250	8.0m	150S	Si	C219	114	SDA267A	50	10	55C	125		150C	Si	C216h
5	BR81F	100	8.0	50A	250		125A	Si	C219	115♦	SDA304A	50	10	55C	125	8.3m	150	Si	C218e
6	BR81G	100	8.0	50A	250		125A	Si	C219	116	VJ048X*	50	10	60C	75	8.3m	150J	Si	C216d
7▼	DB801T	100	8.0	50A	125	16m	125	Si	M1341	117	100JB05L	50	10	65C	130		150A	Si	C218c
8▼	DB801W	100	8.0	50A	125	16m	125	Si	C219a	118	MB1005	50	10	75H	150		150	Si	C219j
9	KBPC801	100	8.0	50C	125	8.3m	125J	Si	C219a†	119	MB1005G	50	10	75H	150		175	Si	C219j
10	MDA970A2	100	8.0	55C	100		150J	Si△	M1101	120▼	MP1005G	50	10	75C	200	8.3m	150	Si	C188e
11	MB81	100	8.0	75A	25		150	Si	C219j	121	10SB050	50	10	80	300	8.3m	150	Si	C216d
12	MB81G	100	8.0	75A	125		175	Si	C219j	122	10TB050	50	10	80	400	8.3m	150	Si	C230a
13▼	MP81	100	8.0	75	200	8.3m	125	Si	C188e	123	dc10.5	50	10.0	80C	125		150A	Si	M1196
14▼	MP81G	100	8.0	75C	200	8.3m	150	Si	C188e	124	VJ048*	50	10	80C	100	8.3m	150J	Si	C216d
15	8SB100	100	8.0	80	300	8.3m	150	Si	C216d	125	SL1505HE	50	10	100C	65		150A	Si	M1243
16	KBU8B	100	8.0	100C	300	8.3m	150J	Si	M1285	126	K850-1	100	10		300			Si	C188f
17	BR82	200	8.0	40A	250	8.0m	150S	Si	C219	127▼	SRM10A	100	10					Si	
18	BR82F	200	8.0	50A	250		125A	Si	C219	128	TJ118-1	100	10		300			Si	C224j

c. Localice el número del dibujo esquemático en el "Outline Drawing Index" y note el número de página indicado. EJEMPLO: **M1243**

DRAWING INDEX – DIODE DEVICES

OUTLINE DRAWINGS

DRAWING NO.	PAGE	DRAWING NO.	PAGE	DRAWING NO.	PAGE	DRAWING NO.	PAGE	DRAWING NO.	PAGE	DRAWING NO.	PAGE	DRAWING NO.	PAGE
M1112	553	M1186a	562	M1238	572	M1290	582	M1352	594	S65a	601	S305	606
M1115	553	M1187	562	M1239	572	M1291	582	M1353	594	S66	601	S322	606
M1116	553	M1188	562	M1240	572	M1292	582	M1354	594	S66a-c	601	S322a-c	606
M1117	553	M1188a-b	563	M1241	573	M1293	583	M1355	594	S67	601	S324	606
M1118	554	M1189	56[illegible]	M1242	573	M1294	583	M1356	594	S67a	601	S329	606
M1119a-i	554	M1190	56[illegible]	M1243	573	M1295	584	M1357	594	S68	601	S339	606

d. Refiérase a la página indicada y localice el dibujo.

OUTLINE DRAWINGS

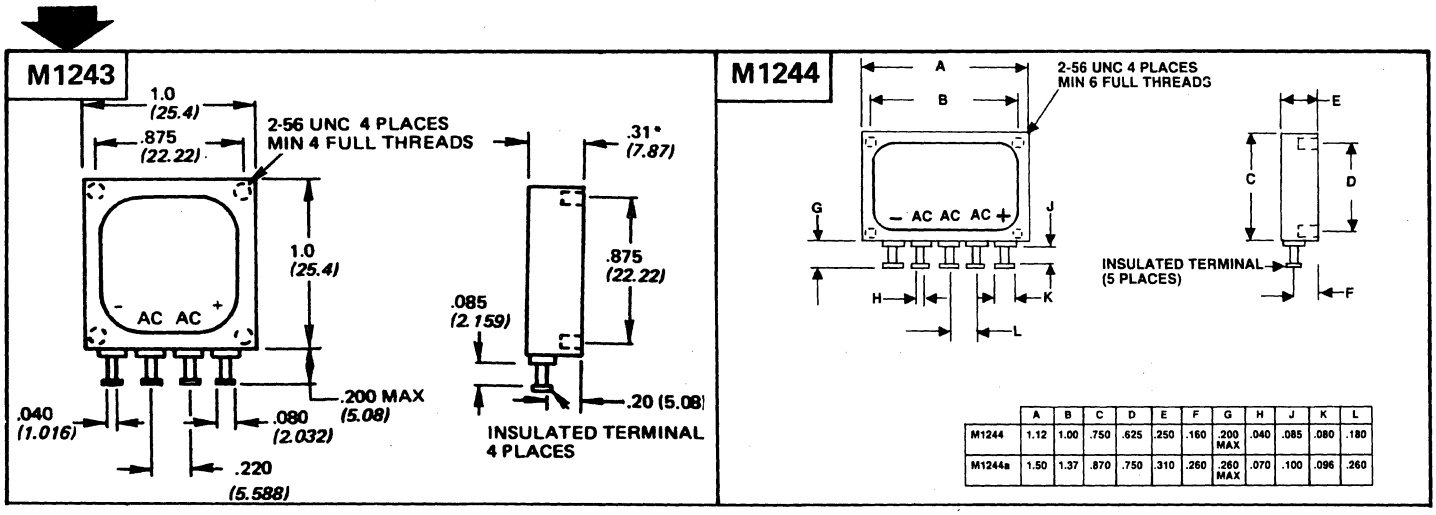

	A	B	C	D	E	F	G	H	J	K	L
M1244	1.12	1.00	.750	.625	.250	.160	.200 MAX	.040	.085	.080	.180
M1244a	1.50	1.37	.870	.750	.310	.260	.260 MAX	.070	.100	.096	.260

NOTA—Los símbolos y códigos utilizados en estas secciones técnicas se explican en las páginas "Interpreter" al final del libro.

DEFINICION DE TERMINOS

INTERPRETACION Y DEFINICIONES

Esta sección define los encabezamientos de las columnas y los símbolos que aparecen en las Secciones Técnicas de este libro. Clasificada alfabéticamente por su descripción de campo, la sección "Column Definitions" interpreta los títulos de campo e indica cómo se debe usar esa sección.

SECTION 8 STANDARD RECOVERY BRIDGE RECTIFIERS SECTION 8

LINE No.	4 TYPE NO.	2 PIV (V)	MAX AVG FWD DC CURRENT 1 Io (A)	3 @ TEMP (°C)	MAX RATING SURGE CURR PEAK 1 Cy (A)	PULSE WIDTH (s)	MAX. TEMP (°C)	DESCRIPTION MAT	DRAWING No.
✪	✪	2	3	4	5	6	8	✪	10

2 – Also listed in Section 6 under Radiation Resistant Device (Use 9) (also see above)
* – Three-Phase Bridge

3 $ – Max. cont. working voltage (PIV not specified)
% – Max. non-repetitive peak transient reverse voltage

5 (Value given indicates temp. at which derating starts, unless otherwise indicated)
$ – Temperature at which derating starts is not specified.
A – Ambient
B – Base or stud
C – Case
H – Heat Sink
J – Junction
L – Lead
S – Storage

8 A – Ambient
B – Base or stud
C – Case
J – Junction
L – Lead
S – Storage

10 ⊘ – Available with reverse polarity; consult manufacturer
♦ – Single Operation

INTERPRETADOR (Véanse también Símbolos y Códigos)

SIMBOLOS: Símbolos tales como #, ▲, y $ se usan en todas las columnas, ya sean numéricas o de otro tipo, cuando las entradas de información difieren de algún modo de la entidad definida en el encabezamiento de la columna. Por ejemplo, si un encabezamiento dado especifica Max. Power (in Watts) y el valor numérico que se ha entrado para un tipo dado representa en cambio la potencia mínima, la variación se denota por medio de un símbolo especial al lado de la entrada numérica.

CODIGOS: Los códigos se usan en algunas columnas como medio para abreviar la información entrada. Los códigos pueden ser alfabéticos (A,B,C etc.) o numéricos (1,2,3 etc.) o una combinación de ambos.

NOTA: Los símbolos y códigos usados aquí se explican en las páginas "Interpreter", al final o al principio del libro.

MULTIPLICADORES DE POTENCIA DE DIEZ

Los multiplicadores de potencia de diez mostrados abajo se usan en las columnas numéricas cuando el valor que se entra es muchas veces más grande o pequeño que las unidades de medida indicadas en el encabezamiento de la columna. Usualmente, éstas últimas son las llamadas unidades básicas tales como V (voltios), A (amperios) y s (segundos). A continuación se dan los multiplicadores y una explicación de su uso:

EXPLICACION

Valor de la información a que se dará entrada	Unidad básica en el encabezamiento de la columna	Entrada efectiva
3 milliamperes	A (amperes)	3.0m
9 megaohms	Ω (ohms)	90M
0.5 volt	V (volts)	500m*
10 amperes	A (amperes)	10

*También puede ser escrito como 0.5 sin multiplicador

MULTIPLICADORES

Potencia	Prefijo	Símbolo
10^{12}	tera	T
10^{9}	giga	G
10^{6}	mega	M
10^{3}	kilo	k
10^{-3}	milli	m
10^{-6}	micro	μ
10^{-9}	nano	n
10^{-12}	pico	p
10^{-15}	femto	f
10^{-18}	atto	a

PARAMETROS SECUENCIALES

El ordenamiento de los tipos en las secciones técnicas está asociado a un conjunto de características especiales seleccionadas por su importancia de entre el grupo general de características tabuladas en cada sección. Estas características seleccionadas o parámetros secuenciales difieren de una sección a otra, y se identifican en la parte superior de la página tal como se muestra en el ejemplo de abajo.

Los diferentes tipos dentro de una misma sección presentan inicialmente un orden numérico (o alfabético) ascendente desde el primero de tales parámetros. Los grupos de tipos que tienen un valor común para el primer parámetro son luego ordenados en orden ascendente desde el segundo parámetro. Este proceso continua para cada parámetro de turno, hasta el último parámetro inclusive, el cual es, en cada caso, el número de tipo en sí. El ordenamiento final, por el número de tipo, se hace de acuerdo con la secuencia de los números de tipo en el índice de referencia. La ausencia de una entrada para cualquier parámetro secuencial se considera como cero y precede cualquier entrada efectiva en la secuencia.

MAJOR CHARACTERISTICS

SEQUENCING PARAMETERS

IN ORDER OF: (1) IO MAX (2) PIV (3) @ TEMP & (4) TYPE NUMBER

8. STANDARD RECOVERY BRIDGE RECTIFIERS

LINE No.	4 TYPE NUMBER	2 PIV (V)	MAX AVG FWD DC CURRENT 1 Io MAX (A)	3 @ TEMP (°C)	MAX RATING SURGE CURR PEAK 1 Cy (A)	PULSE WIDTH (s)	MAX. TEMP (°C)	MAT	DRAWING No.	LINE No.	4 TYPE NUMBER	2 PIV (V)	MAX AVG FWD DC CURRENT 1 Io MAX (A)	3 @ TEMP (°C)	MAX RATING SURGE CURR PEAK 1 Cy (A)	PULSE WIDTH (s)	MAX. TEMP (°C)	MAT	DRAWING No.
1▼	MP805G	50	8.0	75C	200	8.3m	150	Si	C188e	111	S10A05FR*	50	10	55C	100		150	Si	M1034a
2	8SB050	50	8.0	80	300	8.3m	150	Si	C216d	112	SCBH05F*	50	10	55	80		150	Si	C216h
3	KBU8A	50	8.0	100C	300	8.3m	150J	Si	M1285	113	SDA165A	50	10	55C	150		125	Si	C216c
4	BR81	100	8.0	40A	250	8.0m	150S	Si	C219	114	SDA267A	50	10	55C	125		150C	Si	C216h
5	BR81F	100	8.0	50A	250		125A	Si	C219	115♦	SDA304A	50	10	55C	125	8.3m	150	Si	C218e
6	BR81G	100	8.0	50A	250		125A	Si	C219	116	VJ048X*	50	10	60C	75	8.3m	150J	Si	C216d
7▼	DB801T	100	8.0	50A	125	16m	125	Si	M1341	117	100JB05L	50	10	65C	130		150A	Si	C218c
8▼	DB801W	100	8.0	50A	125	16m	125	Si	C219a	118	MB1005	50	10	75H	150		150	Si	C219j
9	KBPC801	100	8.0	50C	125	8.3m	125J	Si	C219a†	119	MB1005G	50	10	75H	150		175	Si	C219j
10	MDA970A2	100	8.0	55C	100		150J	Si△	M1101	120▼	MP1005G	50	10	75C	200	8.3m	150	Si	C188e
11	MB81	100	8.0	75A	25		150	Si	C219j	121	10SB050	50	10	80	300	8.3m	150	Si	C216d
12	MB81G	100	8.0	75A	125		175	Si	C219j	122	10TB050	50	10	80	400	8.3m	150	Si	C230a

2 べ方は三通りあります。

1	電気的及び機械的に要求される事柄	型式番号(製品番号)	説明 1
2	型式番号	電気的 / 機械的特性 または回路図と外観図 または製造元 または同一規格品	説明 2

説明 1

電気的、又は機械的に要求されることがら(米軍仕様を含む)がわかっていて、その目的に合った型式を知りたいときは、まず TABLE OF CONTENTS を開きます。

a. TABLE OF CONTENTS の中から、わかっている素子の型式に一致する項目を選びます。
例：項目 8

TABLE OF CONTENTS — Page

HOW TO USE THIS BOOK
English I
German VII
French XIII
Spanish XIX
Japanese XXV
COMPONENT LOCATOR XXXI
1. **TYPE NO. CROSS INDEX** 1
2. **VOLTAGE REFERENCE DIODES**
Single-&-Double-Anode Types, $P_D < 5W$ 163
3. **GENERAL-PURPOSE DIODES**
Devices to 1 A 231
4. **HIGH-SPEED DIODES**
Including Switching & Fast Recovery Rectifiers 238
5. **GENERAL-PURPOSE RECTIFIERS**
Devices to 7 kA 274
6. **DIODE ARRAYS & MATRICES**
Array 314
Matrix 315
7. **TRANSIENT SUPPRESSOR DIODES**
Including Unipolar & Bipolar Types 316
POWER DEVICES
8. **STANDARD RECOVERY BRIDGE RECTIFIERS**
Single Phase 360
Three Phase 372
9. **SCHOTTKY RECTIFIERS**
Single, & Dual Center-Tapped Diodes 374
10. **VOLTAGE-REGULATOR DIODES**
$P_D \geq 5$ W 377
11. **HIGH-VOLTAGE RECTIFIERS**
PIV $\geq$ 1 kV 401
12. **MISCELLANEOUS DIODES**
Current Regulator/Limiter 434
Logarithmic-Conversion Diode 435
Matched Configuration 435
Noise Generator 435
Schottky-Barrier Diode 436
UHF Detector 439
UHF Mixer 439
Varistor 439
Additional Diode Devices 444
SUPPLEMENTARY SECTIONS
13. Types With U.S. Military Specifications 429
14. Circuit Drawings 449
15. Outline Drawings 453
MANUFACTURERS PROFILE 635
INTERPRETER - Symbols & Codes Explained DI1
DRAWING INDEX DI12
SPECIAL INSERT
Manufacturers' Sales Offices SOL1

b．その項目を開けます。要求される条件を満足する型式を見付けます。
例：SL1505HE.
検索に便利なように同様の型式のものは一箇所にまとめてあります。各ページの右上の見出しをご利用ください。

8. STANDARD RECOVERY BRIDGE RECTIFIERS

IN ORDER OF: (1) IO MAX (2) PIV (3) @ TEMP & (4) TYPE NUMBER

LINE No.	4 TYPE NUMBER	2 PIV (V)	MAX AVG FWD DC CURRENT 1 Io MAX (A)	3 @ TEMP (°C)	MAX RATING SURGE CURR PEAK 1 Cy (A)	PULSE WIDTH (s)	MAX. TEMP (°C)	MAT	DRAWING No.	LINE No.	4 TYPE NUMBER	2 PIV (V)	MAX AVG FWD DC CURRENT 1 Io MAX (A)	3 @ TEMP (°C)	MAX RATING SURGE CURR PEAK 1 Cy (A)	PULSE WIDTH (s)	MAX. TEMP (°C)	MAT	DRAWING No.
1▼	MP805G	50	8.0	75C	200	8.3m	150	Si	C188e	111	S10A05FR*	50	10	55C	100		150	Si	M1034a
2	8SB050	50	8.0	80	300	8.3m	150	Si	C216d	112	SCBH05F*	50	10	55	80		150	Si	C216h
3	KBU8A	50	8.0	100C	300	8.3m	150J	Si	M1285	113	SDA165A	50	10	55C	150		125	Si	C216c
4	BR81	100	8.0	40A	250	8.0m	150S	Si	C219	114	SDA267A	50	10	55C	125		150C	Si	C216h
5	BR81F	100	8.0	50A	250		125A	Si	C219	115♦	SDA304A	50	10	55C	125	8.3m	150	Si	C218e
6	BR81G	100	8.0	50A	250		125A	Si	C219	116	VJ048X*	50	10	60C	75	8.3m	150J	Si	C216d
7▼	DB801T	100	8.0	50A	125	16m	125	Si	M1341	117	100JB05L	50	10	65C	130		150A	Si	C218c
8▼	DB801W	100	8.0	50A	125	16m	125	Si	C219a	118	MB1005	50	10	75H	150		150	Si	C219j
9	KBPC801	100	8.0	50C	125	8.3m	125J	Si	C219a†	119	MB1005G	50	10	75H	150		175	Si	C219j
10	MDA970A2	100	8.0	55C	100		150J	Si△	M1101	120▼	MP1005G	50	10	75C	200	8.3m	150	Si	C188e
11	MB81	100	8.0	75A	25		150	Si	C219j	121	10SB050	50	10	80	300	8.3m	150	Si	C216d
12	MB81G	100	8.0	75A	125		175	Si	C219j	122	10TB050	50	10	80	400	8.3m	150	Si	C230a
13▼	MP81	100	8.0	75	200	8.3m	125	Si	C188e	123	dc10.5	50	10.0	80C	125		150A	Si	M1196
14▼	MP81G	100	8.0	75C	200	8.3m	150	Si	C188e	124	VJ048*	50	10	80C	100	8.3m	150J	Si	C216d
15	8SB100	100	8.0	80	300	8.3m	150	Si	C216d	125	SL1505HE	50	10	100C	65		150A	Si	M1243
16	KBU8B	100	8.0	100C	300	8.3m	150J	Si	M1285	126	K850-1	100	10		300			Si	C188f
17	BR82	200	8.0	40A	250	8.0m	150S	Si	C219	127▼	SRM10A	100	10					Si	
18	BR82F	200	8.0	50A	250		125A	Si	C219	128	TJ118-1	100	10		300			Si	C224j

次に、TYPE NO. CROSS INDEXセクションを開きます。

a．選んだ型式番号 SL1505HE を探し出します。
b．素子番号の右の製造元コードを確認します。SEN
c．何ページの何行目かを確認します。367-125

1. TYPE No. CROSS INDEX

IN TYPE NUMBER SEQUENCE

TYPE No.	MFRS	Pg&Line	TYPE No.	MFRS	Pg&Line	TYPE No.	MFRS	Pg&Line	TYPE No.	MFRS	Pg&Line	TYPE No.	MFRS	Pg&Line
SKN26/16	♦SEKG	412 -125	SKR2M240/08	♦SEKG	309 - 81	SKXA150M	♦SEKG	433 -198	SLC64A	♦SCN	353 - 96	SLD1.5TS	♦SOD	411 - 47
SKN45/02	♦SEKG	302 -164	SKR2M240/10	♦SEKG	404 -134	SKXA150N	♦SEKG	433 -199	SLC70	♦SCN	353 - 97	SLD1.5U	♦SOD	411 - 53
SKN45/04	♦SEKG	302 -200	SKR2M240/12	♦SEKG	408 - 8	SKXA75000	♦SEKG	433 -120	SLC70A	♦SCN	353 - 98	SLD1.5V	♦SOD	411 - 48
SKN45/08	♦SEKG	303 - 23	SKR3F2/10	♦SEKG	261 -124	SL8	CODI	425 -219	SLC75	♦SCN	353 - 99	SLD1.6S	♦SOD	412 - 23
SKN45/12	♦SEKG	407 - 51	SKR3F2/12	♦SEKG	261 -155	SL10	CODI	427 - 22	SLC75A	♦SCN	353 -100	SLD1.8T	♦SOD	413 -205
SKN45/14	♦SEKG	409 -163	SKR3F20/06	♦SEKG	260 -212	SL15	CODI	429 - 24	SLC80	♦SCN	353 -101	SLD1.8TS	♦SOD	413 -206
SKN45/16	♦SEKG	412 -151	SKR3F20/08	♦SEKG	261 - 67	SL20	CODI	430 -116	SLC80A	♦SCN	353 -102	SLD2	♦SOD	415 - 56
SKN46/02	♦SEKG	302 -165	SKR3F20/10	♦SEKG	261 -125	SL25	CODI	431 - 90	SLC90	♦SCN	353 -103	SLD2S	♦SOD	415 - 21
SKN46/04	♦SEKG	302 -201	SKR3F20/12	♦SEKG	261 -126	SL30	CODI	432 - 33	SL[illegible]90A	♦SCN	353 -104	SLD2U	♦SOD	415 - 27
SKN46/08	♦SEKG	303 - 24	SKR4F20/02	♦SEKG	239 - 91	SL45	CODI	432 -216	[illegible]00	♦SCN	353 -105	SLD2V	♦SOD	415 - 22
SKN46/12	♦SEKG	407 - 52	SKR4F20/04	♦SEKG	239 -185	SL1505HE	♦SEN	367 -125	[illegible]00A	♦SCN	353 -106	SLD2.4S	♦SOD	417 - 1
SKN46/14	♦SEKG	409 -164	SKR4F20/06	♦SEKG	240 - 38	SL1510FR	♦SEN	368 -122	[illegible]10	♦SCN	353 -107	SLD2.4T	♦SOD	417 - 2
SKN46/16	♦SEKG	412 -152	SKR4F40/02	♦SEKG	239 - 92	SL1510HE	♦SEN	367 -158	SL[illegible]T10A	♦SCN	353 -108	SLD2.4TS	♦SOD	417 - 3
SKN70/02	♦SEKG	305 -163	SKR4F40/04	♦SEKG	239 -186	SL1515HE	♦SEN	367 -160	SLC120	♦SCN	353 -109	SLD2.4V	♦SOD	417 - 4
SKN70/04	♦SEKG	305 -167	SKR4F40/06	♦SEKG	240 - 39	SL1520	♦SEN	369 - 25	SLC120A	♦SCN	353 -110	SLD2.8S	♦SOD	418 -161

d．MANUFACTURERS' CODES & NAMESの項目を開きます。
e．製造元のコードと名前を探し出します。SEN

MANUFACTURERS' CODES & NAMES

D.A.T.A. MFRS.' CODE		MANUFACTURERS
IMTM		Industria Mexicana Toshiba
INC		International Components Corp.
INL		Intersil, Inc.
INR		International Rectifier Corp.
INRI		International Rectifier Corp.
INRJ		International Rectifier Corp.
ITTG	*	ITT Semiconductors Intermetall
KSI	*	Knox Semiconductor, Inc.
LAM		Lambda Semiconductors
LTE		Lansdale Transistor & Electronics,
SCN	*	Semicon Components, Inc.
SDI		SDI, Inc.
SEKG	*	Semikron Int'l, Inc.
SELI		Semiconductors, Ltd.
SEN		Sensitron Semiconductor, Div.
SES	*	Semitronics Corp.
SET	*	Semtech Corp.
SGSI		SGS-ATES Componenti Elet. SPA
SHEJ		Shindengen Elect. Mfg. Co., Ltd.
SIEG		Siemens Aktiengesellschaft

説明 2

型式番号がわかっていて
電気的特性を知りたいときは、まずTYPE NUMBER
CROSS INDEX のところを開き、型式番号を探し出します。

a．型式番号の横に書いてあるページ番号と行番号(例: 367-125)を確認します。

1. TYPE No. CROSS INDEX

IN TYPE NUMBER SEQUENCE

TYPE No.	MFRS	Pg&Line	TYPE No.	MFRS	Pg&Line	TYPE No.	MFRS	Pg&Line	TYPE No.	MFRS	Pg&Line	TYPE No.	MFRS	Pg&Line
SKN26/16	♦SEKG	412 -125	SKR2M240/08	♦SEKG	309 - 81	SKXA150M	♦SEKG	433 -198	SLC64A	♦SCN	353 - 96	SLD1.5TS	♦SOD	411 - 47
SKN45/02	♦SEKG	302 -164	SKR2M240/10	♦SEKG	404 -134	SKXA150N	♦SEKG	433 -199	SLC70	♦SCN	353 - 97	SLD1.5U	♦SOD	411 - 53
SKN45/04	♦SEKG	302 -200	SKR2M240/12	♦SEKG	408 - 8	SKXA75000	♦SEKG	433 -120	SLC70A	♦SCN	353 - 98	SLD1.5V	♦SOD	411 - 48
SKN45/08	♦SEKG	303 - 23	SKR3F2/10	♦SEKG	261 -124	SL8	CODI	425 -219	SLC75	♦SCN	353 - 99	SLD1.6S	♦SOD	412 - 23
SKN45/12	♦SEKG	407 - 51	SKR3F2/12	♦SEKG	261 -155	SL10	CODI	427 - 22	SLC75A	♦SCN	353 -100	SLD1.8T	♦SOD	413 -205
SKN45/14	♦SEKG	409 -163	SKR3F20/06	♦SEKG	260 -212	SL15	CODI	429 - 24	SLC80	♦SCN	353 -101	SLD1.8TS	♦SOD	413 -206
SKN45/16	♦SEKG	412 -151	SKR3F20/08	♦SEKG	261 - 67	SL20	CODI	430 -116	SLC80A	♦SCN	353 -102	SLD2	♦SOD	415 - 56
SKN46/02	♦SEKG	302 -165	SKR3F20/10	♦SEKG	261 -125	SL25	CODI	431 - 90	SLC90	♦SCN	353 -103	SLD2S	♦SOD	415 - 21
SKN46/04	♦SEKG	302 -201	SKR3F20/12	♦SEKG	261 -126	SL30	CODI	432 - 33	SLC90A	♦SCN	353 -104	SLD2U	♦SOD	415 - 27
SKN46/08	♦SEKG	303 - 24	SKR4F20/02	♦SEKG	239 - 91	SL45	CODI	432 -216	[illegible]00	♦SCN	353 -105	SLD2V	♦SOD	415 - 22
SKN46/12	♦SEKG	407 - 52	SKR4F20/04	♦SEKG	239 -185	SL1505HE	♦SEN	367 -125	[illegible]00A	♦SCN	353 -106	SLD2.4S	♦SOD	417 - 1
SKN46/14	♦SEKG	409 -164	SKR4F20/06	♦SEKG	240 - 38	SL1510FR	♦SEN	368 -122	[illegible]10	♦SCN	353 -107	SLD2.4T	♦SOD	417 - 2
SKN46/16	♦SEKG	412 -152	SKR4F40/02	♦SEKG	239 - 92	SL1510HE	♦SEN	367 -158	SLC110A	♦SCN	353 -108	SLD2.4TS	♦SOD	417 - 3
SKN70/02	♦SEKG	305 -163	SKR4F40/04	♦SEKG	239 -186	SL1515HE	♦SEN	367 -160	SLC120	♦SCN	353 -109	SLD2.4V	♦SOD	417 - 4
SKN70/04	♦SEKG	305 -167	SKR4F40/06	♦SEKG	240 - 39	SL1520	♦SEN	369 - 25	SLC120A	♦SCN	353 -110	SLD2.8S	♦SOD	418 -161

b．そのページ番号と行番号の箇所を見ると、それに相当する電気的特性がすぐ見つかります。回路図と外観図の番号 M1243 は一番最後の欄に書かれており、また図面は順番にDrawing Index（目次参照）のところに示されています。

8. STANDARD RECOVERY BRIDGE RECTIFIERS

IN ORDER OF: (1) IO MAX (2) PIV (3) @ TEMP & (4) TYPE NUMBER

LINE No.	4 TYPE NUMBER	2 PIV (V)	MAX AVG FWD DC CURRENT 1 Io MAX (A)	3 @ TEMP (°C)	MAX RATING SURGE CURR PEAK 1 Cy (A)	PULSE WIDTH (s)	MAX. TEMP (°C)	MAT	DRAWING No.	LINE No.	4 TYPE NUMBER	2 PIV (V)	MAX AVG FWD DC CURRENT 1 Io MAX (A)	3 @ TEMP (°C)	MAX RATING SURGE CURR PEAK 1 Cy (A)	PULSE WIDTH (s)	MAX. TEMP (°C)	MAT	DRAWING No.
1▼	MP805G	50	8.0	75C	200	8.3m	150	Si	C188e	111	S10A05FR*	50	10	55C	100		150	Si	M1034a
2	8SB050	50	8.0	80	300	8.3m	150	Si	C216d	112	SCBH05F*	50	10	55	80		150	Si	C216h
3	KBU8A	50	8.0	100C	300	8.3m	150J	Si	M1285	113	SDA165A	50	10	55C	150		125	Si	C216c
4	BR81	100	8.0	40A	250	8.0m	150S	Si	C219	114	SDA267A	50	10	55C	125		150C	Si	C216h
5	BR81F	100	8.0	50A	250		125A	Si	C219	115♦	SDA304A	50	10	55C	125	8.3m	150	Si	C218e
6	BR81G	100	8.0	50A	250		125A	Si	C219	116	VJ048X*	50	10	60C	75	8.3m	150J	Si	C216d
7▼	DB801T	100	8.0	50A	125	16m	125	Si	M1341	117	100JB05L	50	10	65C	130		150A	Si	C218c
8▼	DB801W	100	8.0	50A	125	16m	125	Si	C219a	118	MB1005	50	10	75H	150		150	Si	C219j
9	KBPC801	100	8.0	50C	125	8.3m	125J	Si	C219at	119	MB1005G	50	10	75H	150		175	Si	C219j
10	MDA970A2	100	8.0	55C	100		150J	Si△	M1101	120▼	MP1005G	50	10	75C	200	8.3m	150	Si	C188e
11	MB81	100	8.0	75A	25		150	Si	C219j	121	10SB050	50	10	80	300	8.3m	150	Si	C216d
12	MB81G	100	8.0	75A	125		175	Si	C219j	122	10TB050	50	10	80	400	8.3m	150	Si	C230a
13▼	MP81	100	8.0	75	200	8.3m	125	Si	C188e	123	dc10.5	50	10.0	80C	125		150A	Si	M1196
14▼	MP81G	100	8.0	75C	200	8.3m	150	Si	C188e	124	VJ048*	50	10	80C	100	8.3m	150J	Si	C216d
15	8SB100	100	8.0	80	300	8.3m	150	Si	C216d	125	SL1505HE	50	10	100C	65		150A	Si	M1243

c. Outline Drawing Indexのところで外観図の番号を探し出し、ページ番号を確認します。例：M1243

DRAWING INDEX – DIODE DEVICES

OUTLINE DRAWINGS

DRAWING NO.	PAGE	DRAWING NO.	PAGE	DRAWING NO.	PAGE	DRAWING NO.	PAGE	DRAWING NO.	PAGE	DRAWING NO.	PAGE	DRAWING NO.	PAGE
M1112	553	M1186a	562	M1238	572	M1290	582	M1352	594	S65a	601	S305	606
M1115	553	M1187	562	M1239	572	M1291	582	M1353	594	S66	601	S322	606
M1116	553	M1188	562	M1240	572	M1292	582	M1354	594	S66a-c	601	S322a-c	606
M1117	553	M1188a-b	563	M1241	573	M1293	583	M1355	594	S67	601	S324	606
M1118	554	M1189	56[illegible]	M1242	573	M1294	583	M1356	594	S67a	601	S329	606
M1119a-i	554	M1190	56[illegible]	M1243	573	M1295	584	M1357	594	S68	601	S339	606

d. 示されているページを開き、外観図と寸法を求めます。

OUTLINE DRAWINGS

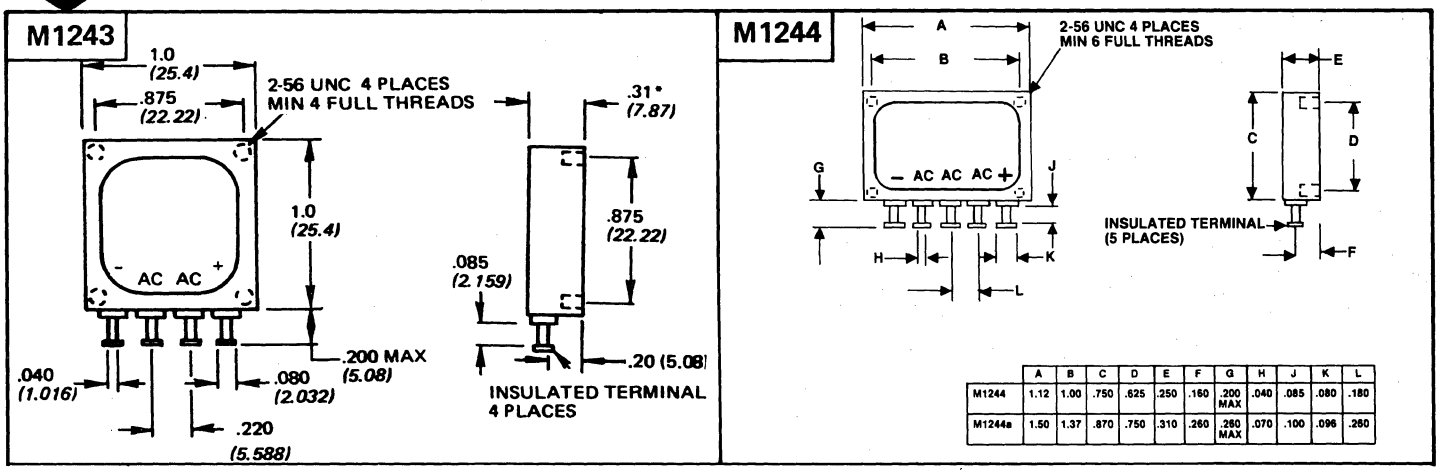

	A	B	C	D	E	F	G	H	J	K	L
M1244	1.12	1.00	.750	.625	.250	.160	.200 MAX	.040	.085	.080	.180
M1244a	1.50	1.37	.870	.750	.310	.260	.260 MAX	.070	.100	.096	.260

なお、各項目で使われている記号やコードは巻末のInterpreter の部分で解説してあります。

用語の定義

解説と定義

この項目では、この本の各項目で使われている表の欄の見出しや記号(シンボル)の定義が示されています。各分野ごとの記述をアルファベット順に並べ、Column Definitions により各分野の名称を読みとり、当該項目の使い方が示されています。

SECTION 8 STANDARD RECOVERY BRIDGE RECTIFIERS SECTION 8

LINE No.	4 TYPE NO.	2 PIV (V)	MAX AVG FWD DC CURRENT 1 Io (A)	3 @ TEMP (°C)	MAX RATING SURGE CURR PEAK 1 Cy (A)	PULSE WIDTH (s)	MAX. TEMP (°C)	DESCRIPTION MAT	DRAWING No.
✪	✪	②	③	④	⑤	⑥	⑧	✪	⑩

② – Also listed in Section 6 under Radiation Resistant Device (Use 9) (also see above)
* – Three-Phase Bridge

③ $ – Max. cont. working voltage (PIV not specified)
% – Max. non-repetitive peak transient reverse voltage

⑤ (Value given indicates temp. at which derating starts, unless otherwise indicated)
$ – Temperature at which derating starts is not specified.

⑧ A – Ambient
B – Base or stud
C – Case
J – Junction
L – Lead
S – Storage

⑩ ⊘ – Available with reverse polarity; consult manufacturer

INTERPRETER（記号とコードの項参照）

記号(シンボル)：全ての欄にわたって、見出しで定義されているのとは何らかの形で異なる種類の情報が記載されているときに、数字と#とか△とか$のような記号が使われています。例えば、ある欄の見出しにMax.Power(Watts単位)とあるのに、記入されている特定の型の数値が最小電力のときは、数字の横に付される特別の記号により示されます。

コード：いくつかの欄では記入されるデータを簡素化するためにコードが用いられています。コードはアルファベットの文字(A、B、Cなど)か、数字（1、2、3など)か、その組合わせにより構成されています。

注意：本書で用いられている記号やコードについての説明は、巻末か巻頭のInterpreter Pagesの部にあります。

10の累乗数

欄の見出しで指示されている単位をはるかに上回るか、下回るような値が記入されるときは、下記のような10の累乗数を用いて表記してあります。後者に属するものとしては、通常V(ボルト)、A(アンペア)、s(秒)などの、いわゆる基本的単位があげられます。乗数とその使い方は次のとおりです。

説明

記入するデータの値	欄の基本単位	実際の記入例
3 milliamperes	A (amperes)	3.0m
9 megaohms	Ω (ohms)	9.0M
0.5volt	V (volts)	500m*
10amperes	A (amperes)	10

＊ 乗数として0.5という形で記入されていることもあります。

乗数

累乗	接頭辞	記号
10^{12}	tera	T
10^{9}	giga	G
10^{6}	mega	M
10^{3}	kilo	k
10^{-3}	milli	m
10^{-6}	micro	μ
10^{-9}	nano	n
10^{-12}	pico	p
10^{-15}	femto	f
10^{-18}	atto	a

見出しパラメタ

各項目における型式の配列は、その項目で表の中の各々の特性の中から重要と思われる特性の順となっています。これらの重要な特性(見出しパラメタ)は、項目毎に異なりますが、下記の例におけるように、各ページの一番上に明記されています。各項目内の異なる型式は、まず最初のパラメタの数値の増す順、またはアルファベット順に配列されています。最初の見出しパラメタが同一の場合は、二番目のパラメタの数値の増す順に配列されます。各パラメタについて、最後のパラメタまでこの要領で配列順を決めていきます。最後のパラメタは常に型式番号そのものに一致します。型式番号別の配列は、cross-indexの型式番号の順に従ってなされます。

見出しパラメタが記入されていない場合は、ゼロと見なされ、他の数値より前に置かれます。

MAJOR CHARACTERISTICS　　SEQUENCING PARAMETERS

IN ORDER OF: (1) IO MAX (2) PIV (3) @ TEMP & (4) TYPE NUMBER

8. STANDARD RECOVERY BRIDGE RECTIFIERS

LINE No.	4 TYPE NUMBER	2 PIV (V)	MAX AVG FWD DC CURRENT 1 Io MAX (A)	3 @ TEMP (°C)	MAX RATING SURGE CURR PEAK 1 Cy (A)	PULSE WIDTH (s)	MAX. TEMP (°C)	MAT	DRAWING No.
1▼	MP805G	50	8.0	75C	200	8.3m	150	Si	C188e
2	8SB050	50	8.0	80	300	8.3m	150	Si	C216d
3	KBU8A	50	8.0	100C	300	8.3m	150J	Si	M1285
4	BR81	100	8.0	40A	250	8.0m	150S	Si	C219
5	BR81F	100	8.0	50A	250		125A	Si	C219
6	BR81G	100	8.0	50A	250		125A	Si	C219
7▼	DB801T	100	8.0	50A	125	16m	125	Si	M1341
8▼	DB801W	100	8.0	50A	125	16m	125	Si	C219a
9	KBPC801	100	8.0	50C	125	8.3m	125J	Si	C219a†
10	MDA970A2	100	8.0	55C	100		150J	Si△	M1101
11	MB81	100	8.0	75A	25		150	Si	C219j
12	MB81G	100	8.0	75A	125		175	Si	C219j
13▼	MP81	100	8.0	75	200	8.3m	125	Si	C188e
14▼	MP81G	100	8.0	75C	200	8.3m	150	Si	C188e
15	8SB100	100	8.0	80	300	8.3m	150	Si	C216d
16	KBU8B	100	8.0	100C	300	8.3m	150J	Si	M1285
17	BR82	200	8.0	40A	250	8.0m	150S	Si	C219
18	BR82F	200	8.0	50A	250		125A	Si	C219

LINE No.	4 TYPE NUMBER	2 PIV (V)	MAX AVG FWD DC CURRENT 1 Io MAX (A)	3 @ TEMP (°C)	MAX RATING SURGE CURR PEAK 1 Cy (A)	PULSE WIDTH (s)	MAX. TEMP (°C)	MAT	DRAWING No.
111	S10A05FR*	50	10	55C	100		150	Si	M1034a
112	SCBH05F*	50	10	55	80		150	Si	C216h
113	SDA165A	50	10	55C	150		125	Si	C216c
114	SDA267A	50	10	55C	125		150C	Si	C216h
115♦	SDA304A	50	10	55C	125	8.3m	150	Si	C218e
116	VJ048X*	50	10	60C	75	8.3m	150J	Si	C216d
117	100JB05L	50	10	65C	130		150A	Si	C218c
118	MB1005	50	10	75H	150		150	Si	C219j
119	MB1005G	50	10	75H	150		175	Si	C219j
120▼	MP1005G	50	10	75C	200	8.3m	150	Si	C188e
121	10SB050	50	10	80	300	8.3m	150	Si	C216d
122	10TB050	50	10	80	400	8.3m	150	Si	C230a
123	dc10.5	50	10.0	80C	125		150A	Si	M1196
124	VJ048*	50	10	80C	100	8.3m	150J	Si	C216d
125	SL1505HE	50	10	100C	65		150A	Si	M1243
126	K850-1	100	10		300			Si	C188f
127▼	SRM10A	100	10					Si	
128	TJ118-1	100	10		300			Si	C224j

D.A.T.A.BOOK®

COMPONENT LOCATOR

The Component Locator is designed to assist you in identifying which D.A.T.A.BOOK should be consulted to find information on a specific type of device.

Part I:
Locator information for the Alternate Source and Replacement Series
At the top of the matrix, locate the type of component for which you need replacement information – then identify which book(s) in the Alternate Source and Replacement Series you should consult.

Direct and Suggested Replacement Guide – Integrated Circuits
Includes direct and suggested replacement information on digital, interface, microprocessor, audio/video, linear and memory ICs. The Direct Replacement section contains information on devices that have the same part number as the device to be replaced. The Suggested Replacement section contains information on replacement devices with a different part number than the device to be replaced.

Direct Replacement Guide – Discrete Semiconductors
Includes direct replacement information on transistors, diodes, thyristors, optoelectronic and microwave devices. Contains replacement information on devices that have the same part number as the device to be replaced.

Generic/Alternate Source Guide – Integrated Circuits
Includes alternate source information on digital, interface, microprocessor, audio/video, linear and memory ICs. ICs are grouped and sorted by generic or root number as an aid in identifying possible alternate sources.

Suggested Replacement/Alternate Source Guide – Discrete Semiconductors
Includes suggested replacement information on transistors, diodes, thyristors, optoelectronic and microwave devices. Identifies replacements that have a different part number than the device to be replaced.

IC Functional Equivalence Guide
Identifies memory, digital, interface and linear IC devices that have been determined to be pin-for-pin functionally equivalent. Highlights those devices whose functional equivalence has been verified by an independent testing laboratory.

International Directory of ICs and Discrete Semiconductors (Formerly Master Type Locator)
Consolidated listing of ICs, discrete semiconductors, optoelectronic and microwave devices in current production. Identifies the function of each device, its manufacturers and where to locate additional information on each device.

International Directory of Discontinued ICs and Discrete Semiconductors
Consolidated listing of ICs, discrete semiconductors, optoelectronic and microwave devices that are discontinued – no longer in production. Identifies the function of each device, its manufacturers and where to locate additional information.

D.A.T.A.BOOKS Alternate Source and Replacement Series	COMPONENT														
TITLE OF PUBLICATION	TRANSISTOR	DIODE	THYRISTOR	POWER SEMICONDUCTOR	DIGITAL ICs	INTERFACE ICs	LINEAR ICs	MEMORY ICs	AUDIO/VIDEO ICs	MICROPROCESSOR ICs	MICROCOMPUTER SYSTEMS	OPTOELECTRONICS	MICROWAVE	MODULES/HYBRIDS	POWER SUPPLIES
Direct and Suggested Replacement Guide – Integrated Circuits					●	●	●	●	●	●					
Direct Replacement Guide – Discrete Semiconductors	●	●	●	●								●	●		
Generic/Alternate Source Guide – Integrated Circuits					●	●	●	●	●	●					
Suggested Replacement/Alternate Source Guide – Discrete Semiconductors	●	●	●	●								●	●		
IC Functional Equivalence Guide					●	●	●	●							
International Directory of ICs and Discrete Semiconductors/International Directory of Discontinued ICs and Discrete Semiconductors	●	●	●	●	●	●	●	●	●	●	●	●	●	●	●

PART II: Locator information for the other D.A.T.A.BOOKS in the Electronic Information Series
At the left side of the matrix, locate the type of component for which you need detailed information such as design parameters, logic and outline drawings, names of manufacturers, etc. – then identify which D.A.T.A.BOOK you should consult.

	TITLE OF PUBLICATION															
COMPONENT	TRANSISTOR	DIODE	THYRISTOR	POWER SEMICONDUCTOR	DIGITAL ICs	INTERFACE ICs	LINEAR ICs	MEMORY ICs	AUDIO/VIDEO ICs	MICROPROCESSOR ICs	MICROCOMPUTER SYSTEMS	OPTOELECTRONICS	MICROWAVE	MODULES/HYBRIDS	POWER SUPPLIES	MILITARY ELECTRONIC DEVICES GUIDE
A/D Converter						●								●		●
A/A I/O Converter										●	●					
AC Switch (ACS)			●	●										●		
Active Filter							●									
A/D I/O Converter										●	●					
Adder: Half, Full					●											●
Adder/Subtractor					●											●
Address MUX/Refresh Counter						●										●
AFC Circuit									●							●
AGC Circuit									●							
ALARM Circuit							●									
ALU Status/Shift Controller										●						●
ALU					●											●
AM Receiver									●							
AM/FM RF-IF Circuit									●							●
Amorphous Sense Amplifier						●										
Amplifier-Antilog							●									
Amplifier-Audio									●					●		●
Amplifier-Buffer							●									●
Amplifier-CATV									●					●		
Amplifier-Current							●							●		●
Amplifier-Differential							●							●		●
Amplifier-Gas FET														●		
Amplifier-Instrumentation							●							●		●
Amplifier-Isolation							●							●		
Amplifier-Logarithmic							●							●		
Amplifier-Microwave													●			
Amplifier-Operational							●							●		●
Amplifier-Optoelectronic												●		●		
Amplifier, Power							●							●		●
Amplifier-Programmable Gain							●							●		●
Amplifier-Reference							●									
Amplifier-RF/IF							●		●					●		●
Amplifier-Sample/Hold						●								●		●
Amplifier-Sense						●								●		
Amplifier-Sense-Mag Bubble Mem						●		●								●
Amplifier-Sense-Magnetic Tape						●										●
Amplifier-Sense-MOS						●										●
Amplifier-Sense-NMOS						●										●
Amplifier-Sense-Plated Wire						●										
Amplifier-Servo							●									
Amplifier-Squaring							●									●
Amplifier-Track & Hold						●								●		●
Amplifier-Video							●		●							●
Amplifier-Wideband							●		●					●		●
Analog Signal Level Detector							●							●		●
Analog MUX						●								●		●
Analog Multiplier							●									●
Analog Delay (SAD)							●									
Analog Switches-SPDT						●								●		●
Analog Switches-SSNC						●								●		●
Analog Switches-SSNO						●								●		●
Antilog Amplifiers							●									
Arithmetic Logic Unit					●											●
Array-Analog Switch						●										●
Array-Diode		●														●
Array-LED												●				
Array-Photodiode												●				
Array-Phototransistor												●				
Array-Photovoltaic												●				

COMPONENT	TITLE OF PUBLICATION															
	TRANSISTOR	DIODE	THYRISTOR	POWER SEMICONDUCTOR	DIGITAL ICs	INTERFACE ICs	LINEAR ICs	MEMORY ICs	AUDIO/VIDEO ICs	MICROPROCESSOR ICs	MICROCOMPUTER SYSTEMS	OPTOELECTRONICS	MICROWAVE	MODULES/HYBRIDS	POWER SUPPLIES	MILITARY ELECTRONIC DEVICES GUIDE
Array-Programmable Gate								●								●
Array-Programmable Logic								●								●
Array-Transistor							●									●
Astable Multivibrator					●											●
Attenuator							●									
Audio Amplifier									●							●
Audio Processor (Stereo/4 Channel)									●							
Automatic Call Processing Unit (ACPU)										●						
Automatic Frequency Control									●							●
Automatic Gain Control									●							●
Automotive									●							
Avalanche Diode		●														●
Avalanche Mode Transistor	●															
Backward Diode													●			
Backward Wave Tube													●			
Bar Graph Display												●				
Bar Graph Generator						●										
Battery-on-Chip RAM								●								
Baud Rate Generator						●										●
Bi-Directional Transistor	●															
Bi-Directional Switch			●													
Binary Coded Decimal Counter					●											●
Bit Slice Correlator										●						
Bridges-Silicon Controlled			●													
Bridge Rectifier		●														
Bubble Memory/Support								●								
Buffer Amplifier							●									●
Buffer Hex Bus					●											●
Buffer/Driver						●				●						●
Buffer/Driver-Logic						●	●									●
Buffer Gates						●										●
Buffer Octal						●										●
Bus Arbiter										●						
Bus Driver						●										●
Bus Interface						●										●
Bus Receiver						●										●
Bus/Line Transceiver						●								●		●
Calculators									●							
CAM								●								
CATV Amplifier									●							
CATV Amplifier Module														●		
Card Controller											●					
CPU Board											●					
CCD							●	●								
Channel Scanner									●							
Character Generator								●								
Charge-Coupled Device (CCD)							●	●								
Checker-Parity					●											●
Chip Set Microprocessor										●						
Chopper Stabilized Op Amp							●									
Circular Detector												●				
Clamp						●										
Clamp/Terminator						●								●		
Clock-Digital									●							
Clock Driver						●								●		●
Clock Generator/Driver										●						●
Clocks/Multivibrators					●											●
Code Converter								●								●
CODEC							●									
Color TV Circuits									●					●		
Compact Disk Circuit									●							
Compact Disk D/A						●			●							
Compander							●									
Comparator-Current							●									
Comparator-Identity					●											●

COMPONENT	TITLE OF PUBLICATION															
	TRANSISTOR	DIODE	THYRISTOR	POWER SEMICONDUCTOR	DIGITAL ICs	INTERFACE ICs	LINEAR ICs	MEMORY ICs	AUDIO/VIDEO ICs	MICROPROCESSOR ICs	MICROCOMPUTER SYSTEMS	OPTOELECTRONICS	MICROWAVE	MODULES/HYBRIDS	POWER SUPPLIES	MILITARY ELECTRONIC DEVICES GUIDE
Comparator-Magnitude					●											●
Comparator-Phase							●									
Comparator-Unified Bus					●											
Comparator-Voltage							●							●		●
Complementary Symm (PNP & NPN)	●						●									
Computer-on-a-chip										●						
Consumer Product Microprocessor										●						
Contact Protector Diode		●														●
Content Addressable Memory								●								
Control-Store Sequencer										●						
Controller-ALU Status										●						
Controller-Card											●					
Controller-Data Interface						●				●						●
Controller-DMA										●						
Controller-Diskette						●				●						
Controller-Display						●				●						
Controller-Floppy Disk						●				●						
Controller-Interrupt System										●						●
Controller-Industrial Timer					●											
Controller-Keyboard Encoder						●				●						
Controller-Magnetic Tape						●				●						
Controller-Memory/Interface						●				●						●
Controller-Microcomputer Bus										●						
Controller-Motor Speed							●		●					●		
Controller-Optoelectronic												●				
Controller-Paper Tape						●				●						
Controller-Power Supply							●									●
Controller-Printer						●				●						
Controller-Program Sequence										●						
Controller-Serial Communication						●				●	●					●
Controller-Shift										●						
Controller-Switching Power Supply							●									●
Controller-TTY Interface						●				●						
Controller-Winchester Chip (Flop Disk)						●					●					
Controls					●											
Controls/Counters/Converters					●											
Converter-A/D (All)						●								●		●
Converter-A to A I/O										●	●					
Converter-A to D I/O										●	●					
Converter-Code								●								●
Converter-D to A						●								●		●
Converter-D to A I/O										●	●					●
Converter-Digital to Synchro						●								●		
Converter-Freq. to DC							●							●		●
Converter, Hybrid, Volt-Freq.							●							●		
Converter-Logic Level						●								●		●
Converter-Volt to Current							●							●		
Converter-Voltage to Freq.							●							●		●
Converter Sub-System						●								●		●
Converter-Synchro to Digital														●		
Converters																●
Core Sense Amplifier						●										●
Counter-A/D Converter						●								●		●
Counter-BCD					●											●
Counter-Decimal					●											●
Counter-Display Driver						●										
Counter-Hexadecimal					●											●
Counter-Straight Binary					●											●
Counters					●											●
Crosspoint Switch							●									
CRT Correction Circuit									●							
Crystal Controlled Oscillator					●											●
Current Amplifier							●							●		●
Current Limiter		●					●									●
Current Source							●									●

COMPONENT	TITLE OF PUBLICATION															
	TRANSISTOR	DIODE	THYRISTOR	POWER SEMICONDUCTOR	DIGITAL ICs	INTERFACE ICs	LINEAR ICs	MEMORY ICs	AUDIO/VIDEO ICs	MICROPROCESSOR ICs	MICROCOMPUTER SYSTEMS	OPTOELECTRONICS	MICROWAVE	MODULES/HYBRIDS	POWER SUPPLIES	MILITARY ELECTRONIC DEVICES GUIDE
Current Stabilizer							●							●		●
DAC Current Switching Network						●										
Darlington Transistor	●			●												●
Data Acquisition System						●				●				●		●
Data Interface Controller										●						●
Data Security Device										●						
Data Selectors/MUX's						●										●
DC/DC Converters															●	
DC/DC Converter Controller							●									
Decade Counter					●											
Decoder-Display Driver						●										●
Decoder-DTMF							●									
Decoder/Encoder					●				●					●		
Decoders					●											●
Decryption						●										
Deglitcher						●										
Delay Line (Analog)							●		●					●		
Delay Line (Digital)					●											
Demodulator						●										
Demultiplexer										●						●
Demultiplexer-Digital						●										●
Detector-Carrier							●							●		
Detector Error/Corrector					●											●
Detector-Analog Signal Level							●							●		●
Detector-Address Mark										●						
Detector Devices-Microwave Video													●			
Detector-Emitter/Sensor Pairs/Arrays												●				
Detector-Fluid Level							●									
Detector-Gap												●				
Detector-Infrared												●				
Detector-Microwave													●			
Detector-Null												●				
Detector-Phase									●							●
Detector-Quadrant												●				
Detector-Reflex												●				
Detector-Thermopile												●				
Detector-Zero Crossing						●	●									●
Diac			●													
Dialer-DTMF						●										
Dialer-Phone							●									
Differential Amplifiers							●									●
Differential Line Driver/Transmitter						●										●
Differential Line Receiver						●										●
Differential Line Transceiver						●										●
Differential Pair-Temperature Cont.							●									
Digital Audio Circuit									●							
Digital Multiplexer						●										●
Digital to Synchro Converter														●		
Diode-Array		●														●
Diode-Avalanche		●														●
Diode-Backward													●			
Diode-Breakover		●														
Diode-Bridge		●														●
Diode-Contact Protector		●														●
Diode-Current Limiter		●					●									●
Diode-Detector													●			●
Diode-Detector-UHF		●														●
Diode-Gunn													●			
Diode-Harmonic Generator													●			
Diode-Impatt													●			
Diode-Infrared Emitter												●				
Diode-Infrared Emitter-Array												●				
Diode-Infrared Emitter-Laser												●				
Diode-Infrared Emitter-Negative Resis.												●				
Diode-JFET		●														●

COMPONENT	TRANSISTOR	DIODE	THYRISTOR	POWER SEMICONDUCTOR	DIGITAL ICs	INTERFACE ICs	LINEAR ICs	MEMORY ICs	AUDIO/VIDEO ICs	MICROPROCESSOR ICs	MICROCOMPUTER SYSTEMS	OPTOELECTRONICS	MICROWAVE	MODULES/HYBRIDS	POWER SUPPLIES	MILITARY ELECTRONIC DEVICES GUIDE
	TITLE OF PUBLICATION															
Diode-Laser-LED												●				
Diode-LED												●				●
Diode-LED-Array												●				
Diode-Light Emitting												●				●
Diode-Limiter		●											●			●
Diode-Logarithmic Conversion		●														
Diode-Matched		●														●
Diode-Matrixes		●														●
Diode-Microwave-Mixer													●			
Diode-Negative Resistive-LED												●				
Diode-Noise		●											●			
Diode-Noise Generator		●														
Diode-Oscillator													●			
Diode-PIN												●	●			
Diode-Radiation Detector		●														
Diode-Radiation Resistant		●														●
Diode-Rectifier		●		●												●
Diode-Reference		●														●
Diode-Ring/Quad													●			
Diode-Schottky Barrier		●														●
Diode-Shockley			●													
Diode-Silicon Asym Trigger (SAT)			●													
Diode-Step Recovery													●			●
Diode-Switching		●														●
Diode-Transient Voltage Suppressor		●														●
Diode-Tuning		●											●			●
Diode-Tunnel													●			●
Diode-UHF Detector		●											●			●
Diode-UHF Mixer		●											●			●
Diode-Varactor		●											●			●
Diode-Voltage Regulator		●														●
Diode Array		●														●
Diode Matrix		●														●
Diodes		●														●
Diodes-Zener		●		●												●
Diskette Controller						●				●	●					
Disk Interface Circuit						●										
Display-Integrated Logic												●				
Display-LED												●				
Display-Liquid Crystal												●				
Display-Misc.(Incand.,Gas,Disch.,etc.)												●				
Display-Multiplexer						●								●		
Display-Oscillator						●								●		
Display-Shift Register						●								●		
Display Controller										●	●					
Display Driver-Multiplexer						●								●		●
Display Driver-Shift Register						●								●		
Display Driver/Counter						●								●		●
Display Driver/Decoder						●								●		
Display Driver/Latch						●								●		
Display Driver/Oscillator						●								●		
Divider														●		●
Divider, Frequency					●											●
DMA Controller										●						
DPM Module						●								●		
Driver-Bus						●										●
Driver-Clock						●								●		●
Driver-Clock Generator										●						●
Driver-Display (Digital)						●								●		
Driver-Line						●										
Driver-Memory						●								●		●
Driver-Optoelect Photoelectronic, IR												●				
Driver-Peripheral						●										●
Driver-Power						●								●		●
Drivers/Predrivers/Scalers					●											●

COMPONENT	TITLE OF PUBLICATION															
	TRANSISTOR	DIODE	THYRISTOR	POWER SEMICONDUCTOR	DIGITAL ICs	INTERFACE ICs	LINEAR ICs	MEMORY ICs	AUDIO/VIDEO ICs	MICROPROCESSOR ICs	MICROCOMPUTER SYSTEMS	OPTOELECTRONICS	MICROWAVE	MODULES/HYBRIDS	POWER SUPPLIES	MILITARY ELECTRONIC DEVICES GUIDE
Generator-Digital Function					●											●
Generator/Oscillator-Sine/Sq/Tri							●									
Generic Array Logic								●								
Generator-Video Display									●							
Gray Code Counter					●											
Ground Fault Interrupt							●									
Gunn Diode													●			
Half Adder					●											
Hall Effect Device							●									
Harmonic Generator Diode													●			
Hex Bus Buffer, Inverting/Non-Invert					●											●
Hexadecimal Counter					●											●
High Voltage/High Current Driver														●		●
Home Appliance Circuit									●							
I/O Converter										●						
Identity Comparator					●											●
Image Scanning/Matrix Sensor												●				
Infrared Detector												●				
Infrared Emitting Diode												●				
Instrumentation Amplifier							●									
Integrated Logic/Display												●				
Integrated Thyristor/Rectifier (ITR)			●													
Interface-General Purpose										●						●
Interface-Parallel Peripheral										●						●
Interface-Programmable										●						●
Interrupt System-Priority Encoder						●				●						●
Interrupt System Controller										●						●
Inverters-Hex						●										●
I/O Peripheral										●						●
Isolation Amplifier							●									
Keyboard Encoder						●										
Keyboard Encoder Controller										●	●					
Keyless Lock CKT									●							
Klystron Tube													●			
Ladder Network						●										
Laser Diode												●				
Latches					●											●
Latches Display						●										
LC Oscillator					●											
LDR-Light Dependent Resistor												●				
LED-Negative Resistive												●				
LED Array												●				
LED Display												●				
LED-Dichromatic, Multicolor												●				
Level Detector, Analog							●							●		●
Level Detector, Voltage							●									●
LIFO								●								
Light Activated Switch			●	●								●				
Light Dependent Resistor												●				
Light Dimmer Circuit							●		●							
Light Emitting Diode												●				●
Light Pen												●				
Limiter-Current		●					●									●
Limiter-Microwave													●			
Limiter-Voltage							●									●
Line Driver/Transmitter-Differential						●										●
Line Driver/Transmitter-Single-Ended						●										●
Line Receiver-Differential						●										●
Line Receiver-Single-Ended						●										●
Line Scanning Sensor												●				
Line Transceiver-Differential						●										●
Line Transceiver-Single-Ended						●										●
Linear Power Supplies																
Liquid Crystal Display												●				
Logarithmic Amplifier							●							●		

COMPONENT	TITLE OF PUBLICATION															
	TRANSISTOR	DIODE	THYRISTOR	POWER SEMICONDUCTOR	DIGITAL ICs	INTERFACE ICs	LINEAR ICs	MEMORY ICs	AUDIO/VIDEO ICs	MICROPROCESSOR ICs	MICROCOMPUTER SYSTEMS	OPTOELECTRONICS	MICROWAVE	MODULES/HYBRIDS	POWER SUPPLIES	MILITARY ELECTRONIC DEVICES GUIDE
DTMF Decoder							●							●		
DTMF Dialer							●							●		
DTMF Filter							●							●		
DTMF Generator							●							●		
DTMF Receiver							●							●		
Dual Quad Transistor	●						●									●
Dual Ramp (Slope)-A/D Converter						●								●		●
Duplexer Tube													●			●
DVM Module						●										
Emitter-Sensor Array Detector												●				
Emitter-Sensor Pair Detector												●				
Emitter Array												●				●
Encoder-Keyboard						●										
Encoder-Priority						●										●
Encoder-"X" Input to "Y" Output																●
Encoder-"X" Line to "Y" Line																●
Encoder/Decoder					●									●		●
Encoder/Decoder Remote Cont. Sets									●							
Encryption																●
Erasable Programmable Logic								●								
EAROM								●								
EPROM								●								
EEPROM								●								
Error Detection/Correction Unit										●						
Facsimile Circuit							●									
Fast Carry Counter					●											●
Fast Recovery Diode		●														
Fiberoptic XCURS/XMTRS												●				
Field Effect Transistor	●			●												●
Field Prog Logic Array (FPLA)								●								●
FIFO								●								
FIFO Support Circuit								●								
Filter-Active							●							●		
Filter-DTMF, Telecomm Equipment							●									
Filter (Transversal)							●									
Flip/Flop					●											●
Flip/Flop (J-K)					●											●
Flip/Flop (R-S)					●											●
Flip/Flop (R-S-T)					●											●
Flip/Flop (T)					●											●
Flip/Flop, Complementary (R-S)					●											●
Flip/Flop (D Type)					●											●
Floppy Disk Controller										●	●					
Floppy Disk Read Amplifier						●										
Fluid Detector							●									
FM Multiplexer									●					●		
FM Receiver									●							
Frequency Divider					●											●
Frequency Synthesizer							●									●
Frequency to DC Converter							●							●		●
Full Adder					●											●
Function Generator							●							●		●
Game-Video									●							
Gap Detector												●				
Gate Turnoff			●	●												
Gates					●											●
Generator					●											
Generator-Baud Rate						●										
Generator-Character								●								
Generator-Clock										●						●
Generator-DTMF						●										
Generator-Function							●							●		●
Generator-Look-ahead Carry					●											●
Generator-Parity Checker					●											●
Generator-Sin/Cos Function							●							●		

COMPONENT	TITLE OF PUBLICATION															
	TRANSISTOR	DIODE	THYRISTOR	POWER SEMICONDUCTOR	DIGITAL ICs	INTERFACE ICs	LINEAR ICs	MEMORY ICs	AUDIO/VIDEO ICs	MICROPROCESSOR ICs	MICROCOMPUTER SYSTEMS	OPTOELECTRONICS	MICROWAVE	MODULES/HYBRIDS	POWER SUPPLIES	MILITARY ELECTRONIC DEVICES GUIDE
Logic-Special Device					●											●
Logic Buffer/Driver						●										●
Logic Level Converter						●								●		●
Logic Level Translators						●										●
Logarithmic Conversion Diode		●														
Look-Ahead Carry Generator					●											●
Magnetic Bubble Memory								●								●
Magnetic Bubble Memory Sense Amp.						●										
Magnetic Tape Controller										●	●					
Magnetic Tape Preamplifier						●										
Magnetic Tape Sense Amplifier						●										
Magnetron Tube													●			
Magnitude Comparator					●											●
Matched Pair (PNP & NPN)	●						●									
Matrix/Image Scanning Sensor												●				
Memory-Content Addressable								●								
Memory-Magnetic Bubble								●								
Memory-Mgmt Unit										●						
Memory Driver						●		●						●		
Memory Interface Controller										●	●					●
Memory Interface Sub-system						●										●
Memory Support Circuit								●								
Microcomputer Bus Controller										●						●
Microcontroller										●						●
Microprocessor-Card Set											●					
Microprocessor-Chip-Single										●						
Microprocessor-Chip-Set										●						
Microprocessor Converter										●						
Microwave-Ring/Bridge Quad													●			
Microwave-Special Device													●			
Microwave Amplifier													●			
Microwave Detector													●			
Microwave Limiter													●			
Microwave Mixer Diode													●			
Microwave Oscillator													●			
Microwave Transistor													●			
Microwave Trans.-Junction Field Eff.													●			
Microwave Transistor-MOSFET													●			
Microwave Video Detector Devices													●			
Mixer, Microwave													●	●		
Mixer/IF Strip/Front End							●		●							●
MOD/DEMOD-Slope Delta (Telephone)							●									
MODEM							●		●					●		
Modulator-Pulse Width							●									●
Modulator-Ring							●									
Monostable Multivibrator					●											●
MOS FET-Microwave													●			
MOS Sense Amplifier						●										●
Motion Detector									●							
Motor Speed Controller							●		●					●		
Motor Starting CKT							●									
Multiplexer						●										●
Multiplexer-FM									●					●		
Multiplier					●		●	●					●	●		●
Multivibrator-Astable					●											●
Multivibrator-Monostable					●		●									●
MUX-Analog						●								●		●
MUX-Display						●										
MUX-Digital						●										●
MUX-Programmable								●								●

COMPONENT	TRANSISTOR	DIODE	THYRISTOR	POWER SEMICONDUCTOR	DIGITAL ICs	INTERFACE ICs	LINEAR ICs	MEMORY ICs	AUDIO/VIDEO ICs	MICROPROCESSOR ICs	MICROCOMPUTER SYSTEMS	OPTOELECTRONICS	MICROWAVE	MODULES/HYBRIDS	POWER SUPPLIES	MILITARY ELECTRONIC DEVICES GUIDE
	TITLE OF PUBLICATION															
Negative Resistive LED												●				●
NMOS Sense Amplifier						●										
Noise Diode													●			
Noise Generator Circuit							●									
Noise Generator Diode		●														
Non-Volatile RAM (NVRAM)								●								
Null Detector												●				
Operational Amplifiers							●							●		●
Optical Limit Switch												●				
Optically Isolated Logic Gate												●				
Optoelectronic Amplifier												●				
Optoelectronic Controller												●				
Optoelectronic Driver												●				
Optoelectronic Switch or Relay												●				
Opto-isolator												●				●
Oscillator							●							●		●
Oscillator Diode													●			
Oscillator-Crystal Controlled					●											
Oscillator-Display						●										
Oscillator-LC					●											
Oscillator-Microwave													●			
Oscillator-RC					●		●									●
Oscillator-Sine/Sq/Triangle Wave							●							●		
Oscillator-Tuning Fork					●											
Oscillator-Varactor Tuner													●			
Oscillator-Voltage Controlled					●									●		●
Oscillator-Volt. Controlled Crystal							●									
Over Voltage Protector							●							●		●
Paper Tape Controller						●				●						
Parallel A/D Converter						●								●		●
Parallel Communication Transceiver										●						
Parallel Peripheral Interface										●						●
Parity Generator/Checker					●											●
Peltier Module							●									
Peripheral Driver						●										●
Peripheral Interface Adapter (PIA)										●						●
PGA (Programmable Gate Array)								●								●
Phase Control Circuit							●							●		●
Phase/Frequency Detector							●		●							●
Phase Lock Loop							●							●		●
Phonograph Motor Control									●							
Photo Circuit												●				
Photoconductive Cell												●				
Photocoupler-Photocell Output												●				
Photocoupler-Photocircuit Output												●				
Photocoupler-Photodarlington Output												●				
Photocoupler-Photothyristor Output												●				
Photocoupler-Phototransistor Output												●				
Photodarlington												●				
Photodiode												●				
Photodiode, IR Detector												●				
Photodiode, LASER Detector												●				
Photodiode Array												●				
Photo Potentiometer												●				
Photothyristor												●				
Phototransistor												●				
Phototransistor Array												●				
Photovoltaic Array												●				
Photovoltaic Cell (Solar;IR Detectors)												●				
PIN Diode													●			
PIN Photo Diode												●				
PLA (Programmable Logic Array)								●								
PLL-Phase Lock Loop							●									●
PLS (Programmable Logic Sequence)								●								
Potentiometer Circuit							●									

COMPONENT	TITLE OF PUBLICATION															
	TRANSISTOR	DIODE	THYRISTOR	POWER SEMICONDUCTOR	DIGITAL ICs	INTERFACE ICs	LINEAR ICs	MEMORY ICs	AUDIO/VIDEO ICs	MICROPROCESSOR ICs	MICROCOMPUTER SYSTEMS	OPTOELECTRONICS	MICROWAVE	MODULES/HYBRIDS	POWER SUPPLIES	MILITARY ELECTRONIC DEVICES GUIDE
Potentiometer-Photo												●				
Power-Integrated Thyristor/Rectifier			●	●												
Power-SCR			●	●												●
Power-Triac			●	●												
Power Device						●										●
Power-Drivers Peripheral						●								●		●
Power Supplies Linear															●	
Power Supplies Switching															●	
Power Supply-Switching-Controller							●									●
Power Supply Controller, TV							●		●							
Pre-drivers					●											●
Prescaler					●				●							●
Pressure/Temp Sensor Transistor							●									
Printer Controller										●	●					
Priority Encoder						●										●
Priority Encoder-Interrupt System						●				●						●
Program Sequence Controller										●						
Program Storage Unit (PSU)								●		●						
Programmable Gain Amplifier							●							●		●
Programmable Gate Array (PGA)								●								●
Programmable Interface						●										●
Programmable Logic Array (PLA)								●								●
Programmable Logic Sequence (PLS)								●								
Programmable Multiplexer								●								●
Programmable Power Source						●								●		
Programmable Read Only Memory								●								●
Programmable ROM Patch (PRP)								●								
Prog. Unijunc. Trans. (PUT)-Thyristor			●													●
Programmer/Sequencer						●								●		
PROM								●								●
Proximity Switch, Solid State							●									
PRP (Programmable ROM Patch)								●								
PSU (Program Storage Unit)								●		●						
Pulse Dialer						●										
Pulse Width Modulator							●									●
Pulse Width Modulator Control CKT							●									●
PUT (Prog. Unijunction Trans.)			●													●
Pyroelectric Detector												●				
Quadrant Detector												●				
Radiation Detector Diode		●														
Radiation Resistant Diode		●														●
Radiation Resistant Transistor	●															●
Radio, AM									●							
Radio, FM									●							
RAM								●		●						●
RAM Module (multi-chip)								●								
Rate Multiplier					●											
RC Oscillator					●											●
RC Timer					●											●
RCT (Reverse Conducting Triode)			●	●												
Read/Write Memory								●		●						●
Receiver-DTMF						●										
Rectifier		●		●												●
Rectifier-Bridge		●														●
Rectifier Diode		●		●												●
Rectifier-Silicon Controlled			●	●												●
Reference Amplifier							●							●		
Reference Diode		●														●
Reflex Detector												●				
Register File								●								●
Regulator-Voltage							●							●		●
Relay Lamp Driver						●										
Relay Solid State						●										
Remote Control Unit-General Purpose						●			●							
Remote Control Unit-Receiver									●							

COMPONENT	TITLE OF PUBLICATION															
	TRANSISTOR	DIODE	THYRISTOR	POWER SEMICONDUCTOR	DIGITAL ICs	INTERFACE ICs	LINEAR ICs	MEMORY ICs	AUDIO/VIDEO ICs	MICROPROCESSOR ICs	MICROCOMPUTER SYSTEMS	OPTOELECTRONICS	MICROWAVE	MODULES/HYBRIDS	POWER SUPPLIES	MILITARY ELECTRONIC DEVICES GUIDE
Remote Control Unit-Transmitter									●							
Repertory Dialer							●									
Resolver to Digital A/D Converter						●										
Reverse Conducting Triode (RCT)			●	●												
RF/IF Amplifiers							●		●					●		●
RF Power Amplifier Transistor	●															●
Ring/Bridge Quad													●			●
Ring/Johnson Counter					●											●
Ring Modulator							●									
Ring/Quad Diode													●			
RMS to DC Converter							●									
ROM								●		●						●
ROM, Speech Synthesis									●							
SAS			●													
Sample/Hold						●								●		●
Sample/Hold Amplifier						●								●		●
SAT (Silicon Asymmetrical Trigger)			●													
SBS (Silicon Bi-directional Switch)			●													
SCA (Silicon Controlled Assembly)			●													
Scaler					●											
Schmitt Trigger						●										●
Schottky-Barrier Diode		●														●
SCR			●	●												●
Sense Amplifier						●										●
Sense Amplifier-Amorphous						●										
Sense Amplifier-Core						●										●
Sense Amp-Magnetic Bubble Mem.						●										●
Sense Amplifier-Magnetic Tape						●										●
Sense Amplifier-MOS						●										●
Sense Amplifier-NMOS						●										●
Sensor-Array-Photodiode												●				
Sensor-Array-Phototransistor												●				
Sensor-Array-Photovoltaic												●				
Sensor-Line-Scanning												●				
Sensor-Matrix/Image Scanning												●				
Sensor-Photocircuit-Camera Control									●			●				
Sensor-Photocircuit-Darlington Stage												●				
Sensor-Photocircuit-Light to Freq.												●				
Sensor-Photocircuit-Multifunc. Proc.												●				
Sensor-Photocircuit-Oper. Amp.												●				
Sensor-Photocircuit-Optical Receiv.												●				
Sensor-Photocircuit-Oscillator												●				
Sensor-Photocircuit-Schmitt Trigger												●				
Sensor-Photocircuit-Transistor Stage												●				
Sensor-Photoconductive Cell												●				
Sensor-Photodarlington												●				
Sensor-Photodiode-Avalanche												●				
Sensor-Photodiode-IR Detector												●				
Sensor-Photodiode-Laser Detector												●				
Sensor-Photodiode-Multielement												●				
Sensor-Photodiode-Pin												●				
Sensor-Photodiode-Special Purpose												●				
Sensor-Photothyristor												●				
Sensor-Phototransistor-Field Eff.												●				
Sensor-Photovoltaic Cell												●				
Sensor-Temperature							●									●
Serial Communication Controller						●					●					
Servo Amplifier							●									
Shift Controller										●						
Shift Matrix								●								
Shift Register								●								●
Shift Register/Analog							●									
Shockley Diode			●													
Signal Processor						●	●		●					●		
Signal Conditioner						●	●							●		

COMPONENT	TITLE OF PUBLICATION															
	TRANSISTOR	DIODE	THYRISTOR	POWER SEMICONDUCTOR	DIGITAL ICs	INTERFACE ICs	LINEAR ICs	MEMORY ICs	AUDIO/VIDEO ICs	MICROPROCESSOR ICs	MICROCOMPUTER SYSTEMS	OPTOELECTRONICS	MICROWAVE	MODULES/HYBRIDS	POWER SUPPLIES	MILITARY ELECTRONIC DEVICES GUIDE
Silicon Asymm. Switch (SAS) Trig.			●													
Silicon Asymmetrical Trigger (SAT)			●													
Silicon Bi-directional Switch (SBS)			●													
Silicon Bi-directional Switch Trigger			●													
Silicon Controlled Assembly (SCA)			●													
Silicon Controlled Bridges			●													
Silicon Controlled Rectifier (SCR)			●	●												●
Silicon Controlled Switches (4 Term)			●													
Silicon Field Effect Trans.-P Channel	●			●												●
Silicon Field Effect Trans.-N Channel	●			●												●
Silicon Unidirectional Switch			●													
Sin/Cos Function Generator							●							●		●
Sine/Square/Triangle Wave Oscillator							●							●		●
Single Chip Microprocessor										●						●
Single Ended Line Driver/Transmitter						●										●
Single Ended Line Receiver						●										●
Single Ended Line Transceiver						●										●
Solar Cell												●				
Solid State Cooling Device							●									
Solid State Relay														●		
Speech Circuit (telephone)							●									
Speech Generator									●							
Speech Synthesizer									●							
SPDT Analog Gate Switches						●										●
Squaring Amplifier							●									●
SSNC Analog Gate Switches						●										●
SSNO Analog Gate Switches						●										●
Stabilizer-Current							●							●		●
Stabilizer-Voltage							●							●		●
Stabistor-Regulating Diode		●														●
Static Column Dynamic RAM								●								
Step Recovery Diode													●			●
Stepper Motor Circuit							●									
Stereo Decoder									●							
Storage Register								●								●
Storage-Special Device					●											●
Storage/Shift Register/RAM-ROM								●								●
Straight Binary Counter					●											●
Subscriber Loop Interface (SLIC)						●	●									
Subtractor					●											●
Successive Approx A/D Converter						●								●		●
Successive Approximation Register						●								●		
Surface Acoustic (SAW) Filter									●							
Surge Suppressor Diode		●														
SUS (Silicon Unidirectional Switch)			●													
Switch-Cross Point							●									
Switch-Debouncer						●										
Switch-Hall Effect							●									
Switch-Light Activated			●	●												
Switch-Optical Limit												●				
Switch, Proximity, Solid State							●									
Switch-Silicon Unidirectional			●													
Switch-Solid State					●								●			
Switch-Zero Voltage							●									●
Switch, Touch Control, Interface						●										
Switch Driver						●								●		●
Switches (4 Term)-Silicon Controlled			●													
Switch Mode Regulator							●									●
Switching Diode		●														●
Switching Network-DAC Current						●										
Switching Power Supply Controller							●									●
Switching Power Supplies															●	
Switching Transistor	●			●									●			●
Switching Voltage Regulator							●									●
Synchro Conversion Device						●								●		

COMPONENT	TRANSISTOR	DIODE	THYRISTOR	POWER SEMICONDUCTOR	DIGITAL ICs	INTERFACE ICs	LINEAR ICs	MEMORY ICs	AUDIO/VIDEO ICs	MICROPROCESSOR ICs	MICROCOMPUTER SYSTEMS	OPTOELECTRONICS	MICROWAVE	MODULES/HYBRIDS	POWER SUPPLIES	MILITARY ELECTRONIC DEVICES GUIDE
	TITLE OF PUBLICATION															
Synchro Related Devices						●										
Synchro to Digital A/D Converter						●										
Tape Deck Motor Control									●							
Tape Deck Control IC									●							
Tape System									●							
Telephone Switching Circuit							●									
Telex Circuit							●									
Telecom. Device (Telephone)						●								●		
Temp. Controlled Differential Pair							●									
Temperature Transducer						●	●									
Terminator						●										
Thermopile Detector												●				
Thyristor-ACS-AC Switch			●	●												
Thyristor-GTO-Gate Turnoff Device			●	●												
Thyristor-ITR-Integrated			●	●												
Thyristor/Rectifier			●	●												●
Thyristor-LAS-Light Activated Switch			●	●												
Transistor (PUT)			●													●
Thyristor-RCT-Rev Conducting Triode			●	●												
Thyristor-Silicon Asym. Switch (SAS)			●													
Thyristor-Silicon Bidirect Switch (SBS)			●													
Thyristor-Silicon Unidirect Switch (SUS)			●													
Time Base/Counter					●											●
Time Delays					●											
Timer-RC					●		●									●
Time Slot Assigner Circuit							●									
Tone Ringer							●									
Touch Control Switch Interface							●		●							
Track & Hold Amplifier						●								●		●
Transceiver-Line						●										●
Transceiver-Parallel Communications						●										●
Transducer-Device						●								●		
Transient Voltage Suppressor Diode		●														●
Transistor-Avalanche Mode	●															
Transistor-Bidirectional	●															
Transistor-Complementary Symmetry	●															●
Transistor-Darlington	●			●												●
Transistor-Dual/Quad	●						●									●
Transistor-Field Effect	●			●												●
Transistor-Field Effect-N Channel	●			●												●
Transistor-Field Effect-P Channel	●			●												●
Transistor-Junction Field Effect MW													●			
Transistor-Matched Pair	●															●
Transistor-Microwave													●			
Transistor-MOSFET-Microwave													●			
Transistor-NPN-HiPower-Germanium	●			●												●
Transistor-NPN-HiPower-Silicon	●			●												●
Transistor-NPN-LoPower-Germanium	●															●
Transistor-NPN-LoPower-Silicon	●															●
Transistor-Photo												●				
Transistor-PNP-HiPower-Germanium	●			●												●
Transistor-PNP-HiPower-Silicon	●			●												●
Transistor-PNP-LoPower-Germanium	●															●
Transistor-PNP-LoPower-Silicon	●															●
Transistor-Pressure/Temp. Sensor	●						●									
Transistor-Programmable Unijunction			●													
Transistor-Radiation Resistant	●															●
Transistor-Silicon Field Eff. N Channel	●			●												●
Transistor-Silicon Field Eff. P Channel	●			●												●
Transistor-Switching	●			●									●			●
Transistor-UHF/Microwave													●			
Transistor-Unijunction N	●															●
Transistor-Unijunction P	●															●
Transistor Array	●															●
Transistor Chips	●															

COMPONENT	TITLE OF PUBLICATION															
	TRANSISTOR	DIODE	THYRISTOR	POWER SEMICONDUCTOR	DIGITAL ICs	INTERFACE ICs	LINEAR ICs	MEMORY ICs	AUDIO/VIDEO ICs	MICROPROCESSOR ICs	MICROCOMPUTER SYSTEMS	OPTOELECTRONICS	MICROWAVE	MODULES/HYBRIDS	POWER SUPPLIES	MILITARY ELECTRONIC DEVICES GUIDE
Transistor Chopper	●															●
Translators-Logic Level						●										●
Transmitter/Encoder						●										
Traveling Wave Tube													●			
Triac			●	●												
Trigger-Schmitt						●										●
Trigger-Silicon Asymmetrical			●													
Trigger-Silicon Asymmetrical Switch			●													
Triode-Reverse Conducting			●	●												
TTY Interface/Controller						●				●						
Tube-Backward Wave													●			
Tube-Duplexer													●			
Tube-Klystron													●			
Tube-Magnetron													●			
Tube-Traveling Wave													●			
Tuning Fork Controlled Oscillator					●											
Tunnel Diode													●			●
TV-B/W									●							
TV-Color									●							
UART						●				●				●		●
UHF Detector Diode		●											●			●
UHF Mixer Diode		●											●			●
UHF Microwave Transistor													●			
Ultrasonic Device						●			●							
Unified Bus Comparator					●											
Unijunction Transistor-Programmable			●													●
Univ Asynchronous Rec/Trans						●				●				●		●
Univ Synchronous Rec/Trans						●				●				●		●
(USYNR/T)						●				●						
USYNRT						●				●						
UVEPROM								●								
Varactor Diode													●			●
Varistor		●														
Video Circuits									●							●
VCR Motor Control									●							
VCR REC/PLAY Circuit									●							
Video Detector Devices													●			●
Video Game									●							
Video Modulator							●		●							●
Voice/Data Circuit							●									
Voice Synthesis									●							
Voltage Comparator							●							●		●
Voltage Controlled Amp							●									
Voltage Controlled Crystal Oscillator					●		●									
Voltage Controlled Oscillator					●		●		●					●		●
Voltage Follower							●							●		●
Voltage Level Detector							●									●
Voltage Limiter							●									●
Voltage Reference Precision							●									●
Voltage Reference Amplifier							●									
Voltage Regulator							●		●					●		●
Voltage Regulator-Diode		●														●
Voltage Stabilizer							●		●					●		●
Voltage to Frequency Converter							●							●		●
Voltage Variable Capacitor													●			●
Wideband Amplifier							●		●					●		●
Window Detector							●									●
X-Mitter (UART)						●										●
X-Mitter (USYNR/T)						●										
XTAL Oscillator (external XTAL)					●											
XTAL Oscillator w/XTAL														●		
Zero Voltage Switch							●									

TECHNICAL SECTIONS

1. TYPE No. CROSS INDEX

IN TYPE NUMBER SEQUENCE

TYPE No.	MFRS	Pg&Line
1/4M2.4AZ10	♦MOTA	164 - 22
1/4M2.7AZ10	♦MOTA	164 -137
1/4M3.0AZ10	♦MOTA	165 - 62
1/4M3.3AZ10	♦MOTA	165 -193
1/4M3.6AZ10	♦MOTA	166 -164
1/4M3.9AZ10	♦MOTA	167 -129
1/4M4.3AZ10	♦MOTA	168 -137
1/4M4.7AZ10	♦MOTA	169 -169
1/4M5.1AZ10	♦MOTA	171 - 47
1/4M5.6AZ10	♦MOTA	172 -122
1/4M6.2AZ10	♦MOTA	174 -124
1/4M6.8Z10	♦MOTA	177 -162
1/4M7.5Z10	♦MOTA	179 -154
1/4M8.2Z10	♦MOTA	181 -136
1/4M9.1Z10	♦MOTA	184 -184
1/4M10Z10	♦MOTA	187 - 4
1/4M11Z10	♦MOTA	188 -173
1/4M12Z10	♦MOTA	190 -128
1/4M13Z10	♦MOTA	192 -110
1/4M14Z10	♦MOTA	193 -168
1/4M15Z10	♦MOTA	194 -129
1/4M16Z10	♦MOTA	196 - 39
1/4M17Z10	♦MOTA	197 -100
1/4M18Z10	♦MOTA	198 - 39
1/4M19Z10	♦MOTA	199 -116
1/4M20Z10	♦MOTA	200 - 43
1/4M22Z10	♦MOTA	201 -142
1/4M24Z10	♦MOTA	203 - 51
1/4M25Z10	♦MOTA	204 - 96
1/4M27Z10	♦MOTA	204 -189
1/4M30Z10	♦MOTA	204 -190
1/4M33Z10	♦MOTA	208 - 6
1/4M36Z10	♦MOTA	209 - 95
1/4M39Z10	♦MOTA	210 -134
1/4M43Z10	♦MOTA	211 -155
1/4M45Z10	♦MOTA	212 -129
1/4M47Z10	♦MOTA	212 -166
1/4M50Z10	♦MOTA	213 -151
1/4M52Z10	♦MOTA	214 -137
1/4M56Z10	♦MOTA	214 -165
1/4M62Z10	♦MOTA	215 -176
1/4M68Z10	♦MOTA	216 -148
1/4M75Z10	♦MOTA	217 -139
1/4M82Z10	♦MOTA	218 -125
1/4M91Z10	♦MOTA	219 -112
1/4M100Z10	♦MOTA	220 - 68
1/4M105Z10	♦MOTA	221 - 19
.4M10AZ10,5	MOTA	187 - 32
1A1/18	♦SSI	244 - 50
1A1/52	♦SSI	250 - 55
1A2/18	♦SSI	244 - 51
1A2/52	♦SSI	250 - 56
1A5/18	♦SSI	244 - 52
1A5/52	♦SSI	250 - 57
1A12/18	SSI	235 - 80
1A13/18	SSI	236 - 50
1A14/18	SSI	236 - 85
1A15/18	SSI	236 -156
1A16/18	SSI	236 -207
1A22/18	SSI	235 - 81
1A23/18	SSI	236 - 51
1A24/18	SSI	236 - 86
1A25/18	SSI	236 -157
1A26/18	SSI	236 -208
1A52/18	SSI	235 - 82
1A53/18	SSI	236 - 52
1A54/18	SSI	236 - 87
1A55/18	SSI	236 -158
1A56/18	SSI	236 -209
1AS027	SLCB	285 - 34
1AS029	SLCB	402 - 37
1B1/18	♦SSI	244 - 53
1B1/52	♦SSI	250 - 58
1B2/18	♦SSI	244 - 54
1B2/52	♦SSI	250 - 59
1B2C1	♦TOSJ	286 - 20
1B2Z1	♦TOSJ	286 - 21
1B4B1	TOSJ	361 -160
1B4B41	TOSJ	360 -135
1B4B42	TOSJ	360 -114
1B5/18	♦SSI	244 - 55
1B5/52	♦SSI	250 - 60
1B12/18	SSI	235 - 83
1B13/18	SSI	236 - 53
1B14/18	SSI	236 - 88
1B15/18	SSI	236 -159
1B16/18	SSI	236 -210
1B22/18	SSI	235 - 84
1B23/18	SSI	236 - 54
1B24/18	SSI	236 - 89
1B25/18	SSI	236 -160
1B26/18	SSI	236 -211
1B52/18	SSI	235 - 85
1B53/18	SSI	236 - 55
1B54/18	SSI	236 - 90
1B55/18	SSI	236 -161
1B56/18	SSI	236 -212
1BH62	TOSJ	248 -111
1BZ61	♦TOSJ	280 -107
1C2992	MOTA	210 -116
1C2993	MOTA	211 -144
1C2995	MOTA	212 -150
1C3003	MOTA	218 -113
1C3004	MOTA	219 -105
1C3005	MOTA	220 - 53
1C3006	MOTA	221 - 15
1C3007	MOTA	221 - 33
1C3008	MOTA	221 -171
1C3009	MOTA	222 -130
1C3010	MOTA	223 - 78
1C3011	MOTA	223 -152
1C3012	MOTA	224 -109
1C3014	MOTA	225 -107
1C3015	MOTA	226 -118

TYPE No.	MFRS	Pg&Line
1C3041	MOTA	217 -134
1C3993	MOTA	167 -107
1C5247	MOTA	197 - 91
1C5297	MOTA	434 - 4
1C5351	MOTA	193 -159
1C5352	MOTA	194 -101
1C5379	MOTA	221 - 35
1D2C1	♦TOSJ	286 - 60
1D2Z1	♦TOSJ	286 - 61
1D4B1	TOSJ	361 -194
1D4B41	TOSJ	360 -170
1D4B42	TOSJ	360 -147
1DB050	♦CODI	360 - 90
1DB100	♦CODI	360 -118
1DB200	♦CODI	360 -151
1DB400	♦CODI	360 -186
1DB600	♦CODI	361 - 9
1DH62	TOSJ	248 -115
1DMB10	♦INR	315 - 14
1DMB20	♦INR	315 - 15
1DMB40	♦INR	315 - 16
1DMB60	♦INR	361 - 1
1DZ61	♦TOSJ	280 -205
1EZ110D5	♦MSC	221 - 68
	♦SIEG	
1EZ110D10	MSC	221 - 86
1EZ110D	MSC	221 - 99
1EZ120D5	♦MSC	222 - 19
	♦SIEG	
1EZ120D10	MSC	222 - 36
1EZ120D	MSC	222 - 51
1EZ130D5	♦MSC	222 -163
	♦SIEG	
1EZ130D10	MSC	222 -181
1EZ130D	MSC	223 - 6
1EZ140D5	♦MSC	223 - 95
	♦SIEG	
1EZ140D10	MSC	223 - 99
1EZ140D	MSC	223 -104
1EZ150D5	♦MSC	224 - 7
	♦SIEG	
1EZ150D10	MSC	224 - 25
1EZ150D	MSC	224 - 39
1EZ160D5	♦MSC	224 -141
	♦SIEG	
1EZ160D10	MSC	224 -157
1EZ160D	MSC	224 -169
1EZ170D5	♦MSC	225 - 63
	♦SIEG	
1EZ170D10	MSC	225 - 68
1EZ170D	MSC	225 - 73
1EZ180D5	♦MSC	225 -146
	♦SIEG	
1EZ180D10	MSC	225 -163
1EZ180D	MSC	225 -178
1EZ190D5	♦MSC	226 - 82
	♦SIEG	
1EZ190D10	MSC	226 - 84
1EZ190D	MSC	226 - 87
1EZ200D5	♦MSC	226 -150
	♦SIEG	
1EZ200D10	MSC	226 -167
1EZ200D	MSC	226 -180
1E.5	SSI	251 -157
1G1	♦SOD	401 - 7
1G2	SOD	280 -158
1G2C1	♦TOSJ	286 -110
1G2Z1	♦TOSJ	286 -111
1G4	SOD	281 - 64
1G4B1	TOSJ	362 - 30
1G4B41	TOSJ	360 -205
1G4B42	TOSJ	281 - 42
1G6	SOD	281 -179
1G8	♦SOD	282 - 51
1G10	SOD	401 -177
1GH11	TOSJ	248 -122
1GH62	♦TOSJ	248 -120
1GZ61	♦TOSJ	281 -110
1J4B41	TOSJ	361 - 26
1J4B42	TOSJ	361 - 2
1JH11	TOSJ	248 -130
1JH62	♦TOSJ	248 -128
1JK30	INRJ	241 -164
1JK60	INRJ	241 -218
1JK90	INRJ	242 - 32
1JK100	INRJ	242 - 38
1JK120	INRJ	242 - 61
1JK150	INRJ	242 - 83
1JK160	INRJ	242 -100
1JK180	INRJ	242 -105
1JLA10	♦INRJ	248 - 22
1JZ61	♦TOSJ	282 - 3
1K34A	♦INC	233 -114
1K60	♦INC	233 - 97
1K90	♦INC	233 - 79
1K110	♦INC	233 - 86
1K188	♦INC	233 -115
1K261	♦INC	233 -142
1LE11	♦TOSJ	282 - 52
1LZ61	♦TOSJ	282 - 88
1M110ZS10,5	MOTA	221 - 69
1M120ZS10,5	MOTA	222 - 20
1M130Z,5	MOTA	222 -164
1M130ZS10,5	MOTA	222 -165
1M150Z,5	MOTA	224 - 8
1M160Z,5	MOTA	224 -142
1M180Z,5	MOTA	225 -147
1M180ZS10	MOTA	225 -164
1M200Z,5	MOTA	226 -151
1N34	ASI	233 -116
CEI	CEN	
CRI	GDC	
HTN	IDC	
cont.next col.		

TYPE No.	MFRS	Pg&Line
1N34		
(cont.)	MDC	
MIC	NJS	
SLD	SPE	
SST	SSY	
STI	STR	
UPI	UTX	
	WAB	
1N34A	ASI	233 -117
CEI	CEN	
CRI	♦DIT	
HTN	IDC	
♦INC	MDC	
MIC	MISI	
NJS	SCE	
SLD	SPE	
SST	STI	
STR	TIC	
UPI	UTX	
	WAB	
1N34AS	CEN	233 - 1
MDC	SPE	
	STR	
1N35	ASI	232 -173
CEI	CEN	
CRI	♦DIT	
HTN	MDC	
MIC	SCE	
SPE	SSY	
STR	UPI	
	WAB	
1N36	CEN	232 -143
CRI	HTN	
MIC	SLD	
SPE	SST	
STR	UPI	
	UTX	
1N38	CEI	233 - 98
CEN	CRI	
HTN	IDC	
MDC	MIC	
MISI	SELI	
SLD	SPE	
SST	STI	
STR	TIC	
	UTX	
1N38A	ASI	233 - 99
CEI	CEN	
CRI	HTN	
IDC	MDC	
MIC	SCE	
SLD	SPE	
SST	STI	
STR	UTX	
	WAB	
1N38B	ASI	233 -100
CEN	CRI	
HTN	MDC	
SCE	SLD	
SPE	SST	
STR	UTX	
	WAB	
1N39	CRI	233 - 87
HTN	IDC	
MIC	SPE	
STR	UPI	
1N39A	CRI	233 -118
HTN	IDC	
MIC	SPE	
	STR	
1N39B	CRI	233 -101
HTN	IDC	
MIC	SPE	
	STR	
1N40	AMX	236 - 5
CEI	CRI	
HTN	IDC	
MIC	SPE	
UPI	UTX	
1N41	AMX	231 -129
CRI	HSE	
HTN	MIC	
SPE	UPI	
1N42	AMX	231 -130
CEI	CRI	
HTN	IDC	
MIC	SPE	
	UTX	
1N43	CRI	233 - 54
HTN	MIC	
MISI	SPE	
SSY	STR	
UPI	UTX	
1N44	CEN	233 - 29
CRI	HTN	
MIC	SLD	
SPE	SST	
SSY	STR	
	UTX	
1N45	CEN	233 - 30
CRI	HTN	
MIC	SLD	
SPE	SST	
STR	UPI	
	UTX	
1N46	ASI	233 - 43
CEN	CRI	
HTN	MIC	
SLD	SPE	
SST	STR	
UPI	UTX	
1N47	CEN	232 -209
cont.next col.		

TYPE No.	MFRS	Pg&Line
1N47		
(cont.)	CRI	
HTN	MIC	
SPE	STR	
	UTX	
1N48	CEI	233 -102
CEN	CRI	
HTN	IDC	
MDC	MIC	
MISI	SCE	
SLD	SPE	
SST	STI	
STR	UPI	
	UTX	
1N49	CEI	231 - 65
CEN	CRI	
HTN	IDC	
SLD	SPE	
SST	STR	
UPI	UTX	
1N50	CEI	231 - 66
CEN	CRI	
HTN	IDC	
MDC	SLD	
SPE	SST	
STR	UPI	
	UTX	
1N51	ASI	232 -195
CEI	CEN	
CRI	HTN	
MDC	MIC	
SLD	SPE	
SST	SSY	
STR	UPI	
UTX	WAB	
1N52	CEN	233 -103
CRI	HTN	
IDC	MDC	
MIC	MISI	
SLD	SPE	
SST	STR	
UPI	UTX	
1N52A	CEI	233 -119
CEN	CRI	
HTN	MDC	
SLD	SPE	
SST	STR	
UPI	UTX	
1N54	CEN	233 -120
CRI	HTN	
MDC	MIC	
SLD	SPE	
SST	STR	
UPI	UTX	
1N54A	ASI	233 -121
CEI	CEN	
CRI	HTN	
MDC	MIC	
MISI	SCE	
SLD	SPE	
SST	STR	
UPI	UTX	
1N55	CEN	231 - 67
CRI	HTN	
IDC	MIC	
SPE	STI	
STR	UPI	
	UTX	
1N55A	ASI	233 -104
CEN	CRI	
HTN	ITTG	
MIC	SPE	
STI	STR	
UTX	WAB	
1N55B	CEN	233 - 2
HTN	IDC	
♦ITTG	SPE	
STI	STR	
	UTX	
1N56	CEI	233 -199
CEN	CRI	
HTN	MDC	
MIC	SLD	
SPE	SST	
STR	UPI	
	UTX	
1N56A	CEI	233 -200
CEN	CRI	
HTN	MDC	
MIC	SLD	
SPE	SST	
SSY	STI	
STR	UPI	
	UTX	
1N57	CEI	231 - 60
CEN	CRI	
HTN	MIC	
SLD	SPE	
SST	STR	
UPI	UTX	
1N57A	CEN	233 - 53
CRI	HTN	
IDC	MIC	
SLD	SPE	
SST	STR	
UPI	UTX	
1N58	CEI	233 -105
CEN	CRI	
GDC	HTN	
IDC	MDC	
MIC	SLD	
cont.next col.		

TYPE No.	MFRS	Pg&Line
1N58		
(cont.)	SPE	
SST	STR	
	UTX	
1N58A	CEI	233 -106
CEN	HTN	
IDC	MDC	
MIC	SCE	
SLD	SPE	
SST	SSY	
STI	STR	
	UTX	
1N59	IDC	233 - 88
	SPE	
1N60	ASI	232 -190
CEI	CEN	
CRI	GDC	
GTC	HTN	
IDC	IMTM	
♦INC	ITTG	
MDC	MIC	
MISI	NJS	
SLD	SPE	
SST	SSY	
STI	STR	
♦TOSJ	UPI	
UTX	WAB	
1N60A	CEI	233 - 75
CEN	CRI	
HTN	MDC	
MIC	MISI	
NJS	SLD	
SPE	SST	
STI	STR	
UPI	UTX	
1N60C	CEI	233 -122
HSE	MDC	
MISI	SPE	
	UPI	
1N61	CEN	233 - 55
CRI	HTN	
MDC	MIC	
SLD	SPE	
SST	STR	
	UTX	
1N62	CEN	231 - 68
CRI	HTN	
IDC	MDC	
SLD	SPE	
SST	STR	
	UTX	
1N63	CEN	233 -107
CRI	GDC	
HTN	IDC	
MDC	MIC	
MISI	SCE	
SLD	SPE	
SST	STR	
UPI	UTX	
1N63A	CEI	233 -108
CEN	CRI	
HTN	IDC	
MISI	SLD	
SPE	SST	
STR	UTX	
1N64	CEI	233 - 89
CEN	HTN	
IDC	MDC	
MIC	MISI	
SCE	SPE	
SSY	STR	
UPI	UTX	
1N64A	CEI	231 - 55
CEN	HTN	
IDC	MIC	
SPE	STR	
UPI	UTX	
1N65	CEI	233 - 81
CEN	CRI	
HTN	IDC	
MDC	MIC	
MISI	SCE	
SLD	SPE	
SST	SSY	
STR	UPI	
	UTX	
1N66	CEN	233 -123
CRI	HTN	
MDC	MIC	
MISI	SCE	
SELI	SLD	
SPE	SST	
SSY	STR	
UPI	UTX	
1N66A	CEN	233 -124
CRI	HTN	
MDC	MIC	
MISI	SELI	
SPE	STR	
UPI	UTX	
1N67	CEI	233 - 34
CEN	CRI	
HTN	IDC	
MDC	MIC	
MISI	SELI	
SLD	SPE	
SST	STI	
STR	UTX	
1N67A	ASI	232 -210
CEN	CRI	
HTN	IDC	
MDC	MIC	
MISI	SCE	
cont.next page		

1. TYPE No. CROSS INDEX

IN TYPE NUMBER SEQUENCE

TYPE No.	MFRS	Pg&Line
1N67A (cont.)	SLD	
	SPE	SST
	STI	STR
	UPI	UTX
		WAB
1N68	CEN	233 - 31
	CRI	HTN
	IDC	MDC
	MIC	MISI
	SLD	SPE
	SST	SSY
	STI	STR
		UTX
1N68A	CEI	232 -197
	CEN	CRI
	HTN	IDC
	MDC	MIC
	MISI	SCE
	SLD	SPE
	SST	SSY
	STI	STR
	TIC	UTX
1N69	ASI	233 - 56
	CEN	CRI
	HTN	IDC
	MDC	MIC
	SLD	SPE
	SST	STI
	STR	UPI
	UTX	WAB
1N69A	CEN	233 - 57
	CRI	HTN
	MDC	MIC
	SCE	SLD
	SPE	SST
	SSY	STI
	STR	UPI
		UTX
1N70	CEN	232 -198
	CRI	GDC
	HTN	MDC
	MIC	MISI
	SLD	SPE
	SST	SSY
	STR	UPI
		UTX
1N70A	CEN	232 -199
	CRI	HTN
	IDC	MDC
	MIC	MISI
	SCE	SLD
	SPE	SST
	STR	UTX
1N73	AMX	231 -135
	HSE	HTN
	IDC	MIC
	SPE	STR
	UPI	UTX
1N74	AMX	232 -169
	HSE	HTN
	MIC	SPE
	STR	UPI
		UTX
1N75	CEI	233 - 82
	CEN	CRI
	HTN	IDC
	MDC	MIC
	MISI	SLD
	SPE	SST
	STR	UTX
1N81	CEI	233 - 44
	CEN	CRI
	HTN	MIC
	MISI	SLD
	SPE	SST
	UPI	UTX
1N81A	CEN	232 -200
	CRI	HTN
	MIC	SCE
	SLD	SPE
	SST	UPI
		UTX
1N82	NJS	439 - 21
	SPE	UPI
1N82A	MDC	439 - 49
	NJS	SPE
		UPI
1N83	CRI	231 - 69
	HTN	IDC
	SPE	UPI
1N84	CEI	231 -188
	CEN	CRI
	GDC	HTN
	IDC	SLD
	SPE	SST
	STR	UPI
		UTX
1N86	CEN	233 -109
	CRI	HTN
	MDC	MIC
	SLD	SPE
	SST	STR
	UPI	UTX
1N87	CEN	233 - 77
	CRI	♦DIT
	GDC	HTN
	♦ITTG	MIC
	MISI	NJS
	SLD	SPE
	SST	STI
	STR	UPI
		UTX

TYPE No.	MFRS	Pg&Line
1N87A	ASI	233 - 78
	CEI	CEN
	CRI	♦DIT
	HTN	IDC
	MDC	MIC
	NJS	SLD
	SPE	SST
	STI	STR
	TOSJ	UPI
	UTX	WAB
1N88	CEN	231 - 70
	CRI	♦DIT
	HTN	MDC
	MIC	SLD
	SPE	SST
	SSY	UTX
1N89	CEN	232 -208
	CRI	HTN
	MDC	MIC
	SLD	SST
	STR	UPI
		UTX
1N90	ASI	233 - 3
	CEN	CRI
	HTN	MDC
	MIC	MISI
	SCE	SLD
	SPE	SST
	STI	STR
	UPI	UTX
		WAB
1N91	ASI	274 -199
	CEN	CRI
	HTN	IDC
	MCY	NJS
	SLD	SPE
	SST	SWT
	UPI	UTX
		WAB
1N92	ASI	274 -142
	CEN	CRI
	HTN	IDC
	MCY	NJS
	SLD	SPE
	SST	SWT
	UPI	UTX
		WAB
1N93	ASI	274 - 99
	CEN	CRI
	HTN	IDC
	MCY	NJS
	SLD	SPE
	SST	SWT
	UPI	UTX
		WAB
1N95	CEN	233 - 10
	CRI	HTN
	MDC	MIC
	SLD	SPE
	SST	STR
	UPI	UTX
1N96	ASI	233 - 14
	CEN	CRI
	HTN	MDC
	MIC	SCE
	SLD	SPE
	SST	SSY
	STR	UPI
	UTX	WAB
1N96A	ASI	234 - 13
	CEN	HTN
	MDC	MIC
	SLD	SPE
	SST	STR
	UPI	UTX
		WAB
1N97	CEN	233 - 11
	CRI	HTN
	MDC	MIC
	SLD	SPE
	SST	SSY
	STR	UPI
		UTX
1N97A	CEN	231 -141
	CRI	HTN
	MDC	MIC
	SLD	SPE
	SST	STR
		UTX
1N98	CEN	233 - 15
	CRI	HTN
	MDC	MIC
	SCE	SLD
	SPE	SST
	STI	STR
	UPI	UTX
1N98A	CEN	234 - 14
	CRI	HTN
	♦ITTG	MDC
	MIC	SCE
	SLD	SPE
	SST	STR
	UPI	UTX
1N99	CEN	233 - 12
	CRI	HTN
	MDC	MIC
	SCE	SLD
	SPE	SST
	SSY	STI
	STR	UPI
		UTX
1N99A	CEN	231 -142
	HTN	MDC
cont.next col.		

TYPE No.	MFRS	Pg&Line
1N99A (cont.)	MIC	
	SLD	SPE
	SST	SSY
	STR	UTX
1N100	ASI	233 - 16
	CEN	CRI
	HTN	IDC
	MDC	MIC
	SCE	SLD
	SPE	SST
	STI	STR
	UPI	UTX
		WAB
1N100A	ASI	234 - 15
	CEN	CRI
	HTN	♦ITTG
	MDC	MIC
	MISI	SCE
	SLD	SPE
	SST	STI
	STR	UPI
	UTX	WAB
1N102	CEN	231 -131
	CRI	HTN
	IDC	MDC
	SPE	STR
		UTX
1N103	CEI	231 -155
	CEN	CRI
	♦DIT	GDC
	HTN	IDC
	SLD	SPE
	SST	STR
	UPI	UTX
1N104	CEI	231 -156
	CEN	CRI
	♦DIT	GDC
	HTN	IDC
	SLD	SPE
	SST	STR
	UPI	UTX
1N105	SPE	438 - 42
1N107	CEI	234 -169
	CEN	CRI
	GDC	HTN
	IDC	MDC
	MIC	SLD
	SPE	SST
	STR	UPI
		UTX
1N108	CEI	231 -171
	CEN	CRI
	HTN	MDC
	SLD	SPE
	SST	UPI
		UTX
1N111	CEN	233 -125
	CRI	HTN
	MDC	MIC
	SLD	SPE
	SST	UPI
		UTX
1N112	CEN	233 -126
	CRI	HTN
	MDC	MIC
	SLD	SPE
	SST	UPI
		UTX
1N113	CEN	233 - 83
	CRI	HTN
	MDC	MIC
	SLD	SPE
	SST	UPI
		UTX
1N114	CEN	233 - 84
	CRI	HTN
	MDC	MIC
	SLD	SPE
	SST	UPI
		UTX
1N115	CEN	233 - 85
	CRI	HTN
	MDC	MIC
	SCE	SLD
	SPE	SST
	UPI	UTX
1N116	CEN	233 - 4
	CRI	HTN
	IDC	MDC
	MIC	SCE
	SLD	SPE
	SST	SSY
	UPI	UTX
1N116A	CEN	231 - 94
	HTN	MIC
	SPE	UPI
		UTX
1N117	CEN	233 - 13
	CRI	HTN
	MDC	MIC
	SCE	SLD
	SPE	SST
	UPI	UTX
1N117A	CEN	231 -143
	HTN	MDC
	MIC	SPE
	SSY	UPI
		UTX
1N118	ASI	233 - 17
	CEN	CRI
	HTN	MDC
	MIC	SCE
cont.next col.		

TYPE No.	MFRS	Pg&Line
1N118 (cont.)	SLD	
	SPE	SST
	UPI	UTX
		WAB
1N118A	CEN	234 - 16
	CRI	HTN
	MDC	MIC
	SCE	SLD
	SPE	SST
	STI	UPI
		UTX
1N119	ASI	238 -116
	CEN	CRI
	HTN	♦IDC
	MDC	SLD
	SPE	SST
	SSY	UTX
		WAB
1N120	CEN	238 -117
	CRI	HTN
	♦IDC	MDC
	SLD	SPE
	SST	SSY
		UTX
1N126	ASI	233 - 5
	CEN	CRI
	HTN	MDC
	MIC	MISI
	SLD	SPE
	SST	SSY
	STI	UPI
	UTX	WAB
1N126A	ASI	233 - 6
	CEN	HTN
	MDC	MIC
	MISI	SCE
	SPE	UPI
	UTX	WAB
1N127	CEI	232 -201
	CEN	CRI
	GDC	HTN
	IDC	MDC
	MIC	SLD
	SPE	SST
	STI	UTX
1N127A	CEN	232 -202
	CRI	HTN
	IDC	MDC
	MIC	MISI
	SCE	SLD
	SPE	SST
	SSY	STI
		UTX
1N128	ASI	232 -203
	CEN	CRI
	HTN	MDC
	MIC	MISI
	SCE	SPE
	SSY	UPI
	UTX	WAB
1N128A	CEN	232 -204
	CRI	HTN
	MDC	MIC
	SPE	STI
	UPI	UTX
1N132	MIC	439 - 22
	SPE	
1N133	CEI	231 - 54
	CEN	CRI
	HTN	IDC
	MIC	SPE
	UPI	UTX
1N135	CEI	231 - 71
	CEN	CRI
	HTN	IDC
	SLD	SPE
	SST	UPI
		UTX
1N137A	AMX	232 -205
	CODI	CRI
	HTN	SPE
	SSI	STI
	UPI	UTX
1N137B	AMX	234 - 29
	CODI	HTN
	SPE	SSI
	STI	UPI
		UTX
1N138A	AMX	233 -127
	CODI	HTN
	SPE	SSI
	STI	UPI
		UTX
1N138B	AMX	232 -122
	CODI	HTN
	SPE	SSI
	STI	UPI
		UTX
1N139	CEN	234 - 7
	CRI	HTN
	MDC	SLD
	SPE	SST
	SSY	UPI
		UTX
1N140	CEN	234 - 72
	CRI	HTN
	MDC	SLD
	SPE	SST
	UPI	UTX
1N141	CEN	234 - 8
	CRI	HTN
	MDC	SPE
	UPI	UTX

TYPE No.	MFRS	Pg&Line
1N142	CEN	233 -194
	CRI	HTN
	MDC	SPE
		UTX
1N143	CEN	234 - 73
	CRI	HTN
	MDC	SPE
		UTX
1N144	CEN	235 - 4
	CRI	HTN
	MDC	SLD
	SPE	SST
	UPI	UTX
1N145	CEN	231 -162
	CRI	HTN
	MDC	SLD
	SPE	SST
	UPI	UTX
1N175	CEN	231 - 72
	CRI	HTN
	IDC	SLD
	SPE	SST
		UTX
1N191	ASI	249 - 55
	CEN	CRI
	HTN	♦IDC
	MDC	MISI
	SCE	SLD
	SPE	SST
	STI	UPI
	UTX	WAB
1N192	CEN	249 - 46
	CRI	HTN
	♦IDC	MDC
	MISI	SCE
	SLD	SPE
	SST	UTX
1N194	CEN	249 - 18
	CRI	HTN
	IDC	SLD
	SPE	SST
		UTX
1N194A	HTN	249 - 19
	IDC	SCE
	SLD	SPE
	SST	UTX
1N195	CEN	249 - 20
	CRI	HTN
	IDC	SCE
	SLD	SPE
	SST	UTX
1N196	CEN	249 - 17
	CRI	HTN
	IDC	SCE
	SLD	SPE
	SST	UTX
1N198	ASI	232 -211
	CEN	CRI
	HTN	♦IDC
	MDC	MIC
	MISI	SCE
	SLD	SPE
	SST	STI
	UPI	UTX
		WAB
1N198A	ASI	232 -212
	CEI	CEN
	HTN	♦IDC
	MDC	MISI
	SCE	SLD
	SPE	SST
	SSY	STI
	UPI	UTX
		WAB
1N198B	CEN	241 - 72
	HTN	♦IDC
	MDC	SCE
	SLD	SPE
	SST	STI
		UTX
1N200	AMX	234 - 74
	CODI	CRI
	HTN	SCA
	SCE	SPE
	SSI	STI
	UPI	UTX
1N201	AMX	234 - 43
	CODI	CRI
	♦DIT	HTN
	SCA	SCE
	SPE	SSI
	STI	UPI
		UTX
1N202	AMX	234 - 10
	CODI	CRI
	♦DIT	HTN
	SCA	SCE
	SPE	SSI
	STI	UPI
		UTX
1N203	AMX	233 -212
	CODI	CRI
	♦DIT	HTN
	SCA	SCE
	SPE	SSI
	STI	UPI
		UTX
1N204	AMX	233 -191
	CODI	CRI
	♦DIT	HTN
	SCA	SCE
	SPE	SSI
	STI	UPI
		UTX

Δ-Registered with JEDEC by this manufacturer

♦-Mfr's data sheet available in microfilm service

1. TYPE No. CROSS INDEX

IN TYPE NUMBER SEQUENCE

TYPE No.	MFRS	Pg&Line
1N205	AMX	233 -150
CODI	CRI	
♦DIT	HTN	
SCA	SCE	
SPE	SSI	
STI	UPI	
	UTX	
1N206	AMX	233 - 72
CODI	CRI	
♦DIT	HTN	
SCA	SCE	
SPE	SSI	
STI	UPI	
	UTX	
1N207	AMX	233 - 63
CODI	CRI	
♦DIT	HTN	
SCA	SCE	
SPE	SSI	
STI	UPI	
	UTX	
1N208	AMX	233 - 35
CODI	CRI	
♦DIT	HTN	
SCA	SCE	
SPE	SSI	
STI	UTX	
1N209	AMX	232 -218
CODI	CRI	
♦DIT	HTN	
SCA	SCE	
SPE	SSI	
STI	UPI	
	UTX	
1N210	AMX	232 -184
CODI	CRI	
♦DIT	HTN	
SCA	SCE	
SPE	SSI	
STI	UPI	
	UTX	
1N211	AMX	232 -170
CODI	CRI	
♦DIT	HTN	
SCA	SCE	
SPE	SSI	
STI	UPI	
	UTX	
1N212	AMX	232 -144
CODI	CRI	
♦DIT	HTN	
SCA	SCE	
SPE	SSI	
STI	UPI	
UTX	WAB	
1N213	AMX	232 -140
CODI	CRI	
♦DIT	HTN	
SCA	SCE	
SPE	SSI	
STI	UPI	
	UTX	
1N214	AMX	234 -194
CODI	CRI	
♦DIT	HTN	
SCA	SCE	
SPE	SSI	
STI	UTX	
1N215	AMX	232 -127
CODI	CRI	
♦DIT	HTN	
SCA	SCE	
SPE	SSI	
STI	UTX	
1N216	AMX	232 -123
CODI	CRI	
♦DIT	HTN	
SCA	SCE	
SPE	SSI	
STI	UTX	
1N217	AMX	232 -120
CODI	CRI	
♦DIT	HTN	
SCA	SCE	
SPE	SSI	
STI	UTX	
1N218	AMX	232 -119
CODI	CRI	
♦DIT	SCA	
SCE	SPE	
SSI	STI	
	UTX	
1N219	AMX	232 -117
CODI	CRI	
♦DIT	SCA	
SCE	SPE	
SSI	STI	
	UTX	
1N220	AMX	232 -116
CODI	CRI	
♦DIT	SCA	
SCE	SPE	
SSI	STI	
	UTX	
1N221	AMX	232 -114
CODI	CRI	
♦DIT	SCA	
SCE	SPE	
SSI	STI	
	UTX	
1N222	AMX	232 -113
CODI	CRI	
♦DIT	SCA	
cont.next col.		

TYPE No.	MFRS	Pg&Line
1N222		
(cont.)	SCE	
SPE	SSI	
STI	UTX	
1N225	AMX	228 -116
CODI	CRI	
DIT	HTN	
SCE	SLD	
SPE	SSI	
SST	UTX	
1N225A	AMX	228 -114
CODI	CRI	
HTN	SCE	
SPE	SSI	
1N226	AMX	228 -132
CODI	CRI	
DIT	HTN	
SCE	SLD	
SPE	SSI	
SST	UTX	
1N226A	AMR	228 -130
AMX	CODI	
HTN	SCE	
SPE	SSI	
1N227	AMR	228 -143
AMX	CODI	
CRI	DIT	
GDC	HTN	
SCE	SLD	
SPE	SSI	
SST	UTX	
1N227A	AMR	228 -141
AMX	CODI	
HTN	SCE	
SPE	SSI	
1N228	AMR	228 -155
AMX	CODI	
CRI	DIT	
HTN	SCE	
SLD	SPE	
SSI	SST	
	UTX	
1N228A	AMR	228 -153
AMX	CODI	
HTN	SCE	
SPE	SSI	
	UPI	
1N229	AMR	228 -167
AMX	CODI	
CRI	DIT	
HTN	SCE	
SLD	SPE	
SSI	SST	
	UTX	
1N229A	AMR	228 -165
AMX	CODI	
HTN	SCE	
SPE	SSI	
1N230	AMR	228 -179
AMX	CRI	
DIT	HTN	
SCE	SLD	
SPE	SSI	
SST	UTX	
1N230A	AMR	228 -177
AMX	HTN	
SCE	SPE	
	SSI	
1N231	AMR	229 - 11
AMX	CRI	
DIT	HTN	
SCE	SLD	
SPE	SSI	
SST	UTX	
1N231A	AMR	229 - 9
AMX	HTN	
SCE	SPE	
	SSI	
1N232	AMR	229 - 30
AMX	CRI	
DIT	HTN	
SCE	SLD	
SPE	SSI	
SST	UTX	
1N232A	AMR	229 - 28
AMX	HTN	
SCE	SPE	
	SSI	
1N233	AMR	229 - 47
AMX	CRI	
DIT	HTN	
SCE	SLD	
SPE	SSI	
SST	UTX	
1N233A	AMR	229 - 45
AMX	HTN	
SCE	SPE	
	SSI	
1N234	AMR	229 - 62
AMX	CRI	
DIT	HTN	
SCE	SLD	
SPE	SST	
	UTX	
1N234A	AMR	229 - 60
AMX	HTN	
SCE	SPE	
1N235	AMR	229 - 74
AMX	CRI	
DIT	HTN	
IDC	SCE	
SLD	SPE	
SST	UTX	

TYPE No.	MFRS	Pg&Line
1N235A	AMR	229 - 72
AMX	HTN	
IDC	SCE	
	SPE	
1N236	AMR	217 -124
AMX	CRI	
DIT	HTN	
SCA	SCE	
SLD	SPE	
SST	UTX	
1N237	AMR	219 - 88
AMX	CRI	
DIT	HTN	
SCE	SLD	
SPE	SST	
	UTX	
1N238	AMR	221 - 17
AMX	CRI	
DIT	HTN	
SCE	SLD	
SPE	SST	
	UTX	
1N239	AMR	222 -129
AMX	CRI	
DIT	HTN	
SCA	SCE	
SLD	SPE	
SST	UTX	
1N248	AMR	293 -212
ASI	CEN	
COO	CRI	
EDL	ETC	
HTN	IDC	
♦PRX	SAR	
SPE	SSI	
TIC	TRWS	
UPI	UTX	
	WAB	
1N248A	AMR	301 - 48
ASI	CEI	
CEN	COO	
CRI	EDL	
ETC	GTC	
HTN	IDC	
IDI	♦PRX	
SAR	SPE	
SSI	SST	
TRWS	UTX	
	WAB	
1N248B	AMR	301 - 49
ASI	CEI	
CEN	COO	
CRI	EDL	
ETC	GTC	
HTN	IDC	
IDI	MOTA	
♦PRX	SAR	
SLD	SOD	
SPE	♦SSI	
SST	THEF	
TRWS	UTX	
	WAB	
1N248C	AMR	297 -107
ASI	CEI	
CEN	COO	
EDL	ETC	
GTC	HTN	
IDC	IDI	
MOTA	PRX	
SAR	SCN	
SPE	♦SSI	
TRWS	UPI	
UTX	WAB	
1N249	AMR	294 - 17
ASI	CEN	
COO	CRI	
EDL	ETC	
HTN	IDC	
NJS	♦PRX	
SAR	SPE	
♦SSI	TRWS	
UPI	UTX	
	WAB	
1N249A	AMR	301 - 52
ASI	CEI	
CEN	COO	
CRI	EDL	
ETC	GTC	
HTN	IDC	
IDI	NJS	
♦PRX	SAR	
SPE	♦SSI	
SST	TRWS	
UTX	WAB	
1N249B	AMR	297 -122
ASI	CEI	
CEN	COO	
EDL	ETC	
GTC	HTN	
IDC	IDI	
MOTA	NJS	
♦PRX	SAR	
SLD	SOD	
SPE	♦SSI	
SST	THEF	
TIC	TRWS	
UTX	WAB	
1N249C	AMR	297 -125
ASI	CEI	
CEN	COO	
EDL	ETC	
GTC	HTN	
IDC	IDI	
cont.next col.		

TYPE No.	MFRS	Pg&Line
1N249C		
(cont.)	MOTA	
PRX	SAR	
SCN	SPE	
♦SSI	TRWS	
UPI	UTX	
	WAB	
1N250	AMR	294 - 50
ASI	CEN	
COO	CRI	
EDL	ETC	
HTN	IDC	
NJS	♦PRX	
SAR	SPE	
♦SSI	TRWS	
UPI	UTX	
	WAB	
1N250A	AMR	301 - 55
ASI	CEI	
CEN	COO	
CRI	EDL	
ETC	GTC	
HTN	IDC	
IDI	NJS	
♦PRX	SAR	
SPE	♦SSI	
SST	TRWS	
UTX	WAB	
1N250B	AMR	301 - 56
ASI	CEI	
CEN	COO	
CRI	EDL	
ETC	GTC	
HTN	IDC	
IDI	MOTA	
NJS	♦PRX	
SAR	SLD	
SCD	SPE	
♦SSI	SST	
THEF	TIC	
TRWS	UTX	
	WAB	
1N250C	AMR	297 -148
ASI	CEI	
CEN	COO	
CRI	EDL	
ETC	GTC	
HTN	IDC	
IDI	MOTA	
NJS	PRX	
SAR	SCN	
SPE	♦SSI	
TRWS	UTX	
	WAB	
1N251	AMR	242 -174
ASI	CEN	
CRI	HTN	
IDC	MDC	
MSC	SCE	
SLD	SPE	
SST	SSY	
STI	♦TIC	
♦UNI	UPI	
UTX	WAB	
1N251A	AMR	243 - 62
CEN	CRI	
HTN	IDC	
SPE	STI	
	UTX	
1N252	AMR	242 -167
ASI	CEN	
CRI	HTN	
IDC	MDC	
MSC	SCE	
SLD	SPE	
SST	SSY	
UTX	WAB	
1N252A	AMR	243 - 63
CEN	HTN	
IDC	SPE	
	UTX	
1N253	AMR	280 - 41
ASI	CEI	
CEN	CRI	
EDL	ESP	
ETC	HTN	
IDC	♦MAL	
SAR	SCN	
SLD	SPE	
SSI	SST	
SSY	UTX	
1N254	AMR	276 - 68
ASI	CEI	
CEN	CRI	
EDL	ETC	
HTN	♦MAL	
SAR	SCN	
SLD	SPE	
SSI	SST	
	UTX	
1N255	AMR	276 - 88
ASI	CEN	
CRI	EDL	
ETC	HTN	
♦MAL	SAR	
SCN	SLD	
SPE	SSI	
SST	SSY	
	UTX	
1N256	AMR	275 -127
ASI	CEN	
CRI	EDL	
ETC	HTN	

TYPE No.	MFRS	Pg&Line
1N256		
(cont.)	♦MAL	
SAR	SCN	
SLD	SPE	
SSI	SST	
	UTX	
1N265	AMR	231 - 61
CEI	CEN	
CRI	HTN	
IDC	MDC	
MIC	SPE	
STR	UTX	
1N266	AMR	231 - 73
CEI	CEN	
CRI	HTN	
MDC	MIC	
SPE	STR	
UPI	UTX	
1N267	AMR	231 - 74
CEI	CEN	
CRI	HTN	
IDC	MDC	
MIC	SPE	
STR	UPI	
	UTX	
1N268	AMR	236 - 80
CEN	CRI	
HTN	MDC	
MIC	SPE	
STR	UPI	
	UTX	
1N270	AMR	232 - 24
ASI	CEN	
CRI	GDC	
GTC	HTN	
IDC	♦ITTG	
MDC	MISI	
NJS	SCE	
SLD	SPE	
SST	STI	
STR	TIC	
UPI	UTX	
	WAB	
1N273	AMR	234 - 57
CEI	CEN	
CRI	HTN	
IDC	MDC	
SLD	SPE	
SST	SSY	
UPI	UTX	
1N276	AMR	242 -203
ASI	CEN	
CRI	HTN	
♦IDC	♦ITTG	
MDC	MISI	
SCE	SLD	
SPE	SST	
STI	UPI	
UTX	WAB	
1N277	AMR	231 -194
CEN	CRI	
HTN	IDC	
♦ITTG	MDC	
NJS	SCE	
SLD	SPE	
SST	STI	
STR	TIC	
UPI	UTX	
	WAB	
1N278	AMR	231 -144
CEI	CEN	
CRI	HTN	
IDC	♦ITTG	
MDC	SLD	
SPE	SST	
STI	STR	
UPI	UTX	
1N279	AMR	234 - 18
ASI	CEI	
CEN	CRI	
HTN	IDC	
MDC	SCE	
SLD	SPE	
SST	STI	
STR	UPI	
UTX	WAB	
1N281	AMR	234 - 38
ASI	CEI	
CEN	CRI	
HTN	IDC	
MDC	MISI	
SCE	SLD	
SPE	SST	
STI	STR	
UPI	UTX	
	WAB	
1N282	AMR	231 -163
CEI	CEN	
GDC	HTN	
IDC	SLD	
SPE	SST	
STI	STR	
UPI	UTX	
1N283	AMR	232 - 25
ASI	CEI	
CEN	CRI	
HTN	IDC	
♦ITTG	MDC	
MISI	SCE	
SLD	SPE	
SST	SSY	
STI	STR	
UPI	UTX	
	WAB	

Δ-Registered with JEDEC by this manufacturer

♦-Mfr's data sheet available in microfilm service

1. TYPE No. CROSS INDEX

IN TYPE NUMBER SEQUENCE

TYPE No.	MFRS	Pg&Line
1N287	AMR	231 -145
	CEI	CEN
	CRI	HTN
	MDC	SLD
	SPE	SST
	STI	STR
	UPI	UTX
1N288	AMR	231 -164
	CEI	CEN
	CRI	HTN
	IDC	MDC
	SLD	SPE
	SST	STI
	STR	UPI
		UTX
1N289	AMR	234 - 46
	CEI	CEN
	CRI	HTN
	IDC	MDC
	SLD	SPE
	SST	STI
	STR	UPI
		UTX
1N290	AMR	231 - 75
	CEI	CEN
	CRI	HTN
	IDC	MDC
	SLD	SPE
	SST	STR
		UTX
1N291	AMR	231 -165
	CEI	CEN
	CRI	HTN
	IDC	MDC
	SLD	SPE
	SST	STI
	STR	UPI
		UTX
1N292	AMR	234 - 19
	CEI	CEN
	CRI	HTN
	IDC	MDC
	SPE	STR
	UPI	UTX
1N294	AMR	233 -128
	CEN	CRI
	HTN	IDC
	MDC	MIC
	MISI	NJS
	SCE	SELI
	SLD	SPE
	SST	STI
	STR	UPI
		UTX
1N294A	AMR	233 -129
	CEI	CEN
	HTN	IDC
	MDC	SLD
	SPE	SST
	STR	UPI
		UTX
1N295	AMR	233 - 25
	ASI	CEI
	CEN	CRI
	HTN	IDC
	MDC	MIC
	MISI	NJS
	SCE	SLD
	SPE	SST
	SSY	STI
	UPI	UTX
		WAB
1N295A	AMR	233 - 26
	CEI	CEN
	HTN	IDC
	MDC	NJS
	SPE	STI
	UPI	UTX
1N297	AMR	233 - 32
	CEN	CRI
	HTN	MDC
	MIC	SCE
	SLD	SPE
	SST	SSY
	STI	UPI
		UTX
1N297A	AMR	233 - 33
	CEN	CRI
	HTN	MDC
	SLD	SPE
	SST	STI
	UPI	UTX
1N298	AMR	233 -156
	CEN	CRI
	HTN	IDC
	MDC	MIC
	SCE	SLD
	SPE	SST
	STI	UPI
		UTX
1N298A	AMR	233 - 18
	CEI	CEN
	CRI	HTN
	IDC	MDC
	SLD	SPE
	SST	STI
	UPI	UTX
1N299	AMR	439 - 23
	MISI	SPE
1N300	AMR	233 -215
	CEI	CRI
	SPE	SSI
	UPI	UTX
1N300A	AMR	234 - 47
	CEI	IDC
	SPE	SSI
	UPI	UTX
1N300B	AMR	234 -108
	IDC	SPE
	SSI	UPI
		UTX
1N301	AMR	233 - 69
	ASI	CRI
	SPE	SSI
	STI	UPI
	UTX	WAB
1N301A	SPE	233 -216
	SSI	STI
	UPI	UTX
1N301B	SPE	234 - 34
	SSI	STI
	UPI	UTX
1N302	AMR	232 -191
	CRI	SPE
	SSI	STI
	UPI	UTX
1N302A	AMR	233 - 58
	SPE	SSI
	STI	UTX
1N302B	AMR	233 -190
	SPE	SSI
	STI	UTX
1N303	AMR	233 - 45
	CRI	ETC
	IDC	SPE
	SSI	UTX
1N303A	AMR	233 -189
	ETC	IDC
	SPE	SSI
		UTX
1N303B	AMR	233 -217
	ETC	IDC
	SPE	SSI
		UTX
1N304	AMR	231 - 51
	CEN	CRI
	HTN	SLD
	SPE	SST
	UPI	UTX
1N305	AMR	234 -196
	CEN	CRI
	HTN	SLD
	SPE	SST
	STI	UPI
		UTX
1N306	AMR	235 - 3
	ASI	CEI
	CEN	CRI
	GDC	HTN
	IDC	SLD
	SPE	SST
	UPI	UTX
		WAB
1N307	AMR	233 -160
	CEN	CRI
	IDC	SLD
	SPE	SST
	STI	UTX
1N308	AMR	234 -183
	CEI	CEN
	CRI	GDC
	HTN	IDC
	MDC	SLD
	SPE	SST
	UPI	UTX
1N309	AMR	234 -119
	CEN	CRI
	HTN	MDC
	SLD	SPE
	SST	UPI
1N310	AMR	233 - 67
	CEN	CRI
	HTN	MDC
	SLD	SPE
		SST
1N312	AMR	234 - 11
	CEN	CRI
	HTN	MDC
	SLD	SPE
	SST	UPI
1N313	AMR	233 - 68
	CEN	CRI
	HTN	MDC
	SLD	SPE
		SST
1N314	AMR	234 - 99
	CEI	CEN
	CRI	HTN
	IDC	SLD
	SPE	SST
		UPI
1N315	AMR	274 -100
	CEN	CRI
	HTN	IDC
	SPE	SSI
		UPI
1N316	AMR	275 -160
	CEN	CRI
	ETC	HTN
	IDC	SCN
	SPE	SSI
		UPI
1N316A	AMR	275 -161
	CEI	CEN
	CRI	ETC
	HTN	IDC
cont.next col.		
1N316A (cont.)	SPE	SSI
		UPI
1N317	AMR	275 -165
	CEN	CRI
	ETC	HTN
	IDC	SCN
	SPE	SSI
		UPI
1N317A	AMR	275 -166
	CEN	CRI
	ETC	HTN
	IDC	SCN
	SPE	SSI
		UPI
1N318	AMR	275 -171
	CEN	CRI
	ETC	HTN
	IDC	SCN
	SPE	SSI
		UPI
1N318A	AMR	275 -172
	CEI	CEN
	ETC	HTN
	IDC	SCN
	SPE	SSI
		UPI
1N319	AMR	275 -175
	CEN	CRI
	ETC	HTN
	SCN	SPE
	SSI	UPI
1N319A	AMR	275 -174
	CEN	CRI
	ETC	HTN
	SCN	SPE
	SSI	UPI
1N320	ALP	275 -184
	AMR	CEN
	CRI	ETC
	HTN	IDC
	SCN	SPE
		SSI
1N320A	AMR	275 -185
	CEN	ETC
	HTN	SCN
	SPE	SSI
1N321	AMR	275 -198
	CEN	CRI
	ETC	HTN
	SCN	SPE
		SSI
1N321A	AMR	275 -199
	CEN	CRI
	ETC	HTN
	SCN	SPE
		SSI
1N322	AMR	401 - 68
	CEN	CRI
	ETC	HTN
	IDC	SCN
	SPE	SSI
1N322A	AMR	401 - 69
	CEN	ETC
	HTN	SCN
	SPE	SSI
1N323	AMR	276 - 56
	CEI	CEN
	CRI	ETC
	HTN	IDC
	SCN	SPE
		UPI
1N323A	AMR	276 - 57
	CEI	CEN
	ETC	HTN
	IDC	SCN
	SPE	UPI
1N324	AMR	276 - 63
	CEI	CEN
	CRI	ETC
	HTN	IDC
	SCN	SPE
		UPI
1N324A	AMR	276 - 64
	CEI	CEN
	ETC	HTN
	IDC	SCN
	SPE	UPI
1N325	AMR	276 - 73
	CEI	CEN
	CRI	ETC
	HTN	SCN
	SPE	UPI
1N325A	AMR	276 - 74
	CEI	CEN
	ETC	HTN
	SCN	SPE
		UPI
1N326	AMR	276 - 86
	CEI	CEN
	CRI	ETC
	HTN	SCN
	SPE	SSI
		UPI
1N326A	AMR	276 - 87
	CEI	CEN
	ETC	HTN
	SCN	SPE
	SSI	UPI
1N327	AMR	276 -102
	CEI	CEN
	CRI	ETC
cont.next col.		
1N327 (cont.)	HTN	
	IDC	SCN
	SPE	SSI
1N327A	AMR	276 -103
	CEI	CEN
	CRI	ETC
	HTN	SCN
	SPE	SSI
1N328	AMR	276 -115
	CEN	CRI
	ETC	HTN
	SCN	SPE
		SSI
1N328A	AMR	276 -116
	CEN	CRI
	ETC	HTN
	SCN	SPE
		SSI
1N329	AMR	401 - 79
	CEN	CRI
	ETC	HTN
	SCN	SPE
		SSI
1N329A	AMR	401 - 80
	CEN	CRI
	ETC	HTN
	SCN	SPE
		SSI
1N330	AMR	231 - 56
	CEI	CEN
	CRI	HTN
	IDC	SPE
		UPI
1N331	AMR	231 - 76
	CEI	CEN
	HTN	IDC
	SPE	UPI
1N332	AMR	276 - 97
	CEN	CRI
	EDL	ETC
	HTN	IDC
	♦MAL	SAR
	SCN	SLD
	SPE	SSI
	SST	UPI
1N333	AMR	275 -112
	ASI	CEN
	CRI	EDL
	ETC	HTN
	IDC	♦MAL
	SAR	SCN
	SLD	SPE
	SSI	SST
		UPI
1N334	AMR	276 - 83
	ASI	CEN
	CRI	ETC
	HTN	♦MAL
	SAR	SCN
	SLD	SPE
	SSI	SST
		UPI
1N335	AMR	275 - 96
	ASI	CEN
	CRI	EDL
	ETC	HTN
	IDC	♦MAL
	SAR	SCN
	SLD	SPE
	SSI	SST
		UPI
1N336	AMR	276 - 75
	ASI	CEN
	CRI	EDL
	ETC	HTN
	♦MAL	SAR
	SCN	SLD
	SPE	SSI
	SST	UPI
1N337	AMR	275 - 78
	ASI	CEN
	CRI	EDL
	ETC	HTN
	IDC	♦MAL
	SAR	SCN
	SLD	SPE
	SSI	SST
		UPI
1N338	AMR	280 -117
	ASI	CEN
	CRI	EDL
	ETC	HTN
	SAR	SCN
	SLD	SPE
	SSI	SST
		UPI
1N339	AMR	276 - 65
	ASI	CEN
	CRI	EDL
	ETC	HTN
	IDC	♦MAL
	SAR	SCN
	SLD	SPE
	SSI	SST
1N340	AMR	275 - 57
	ASI	CEN
	CRI	EDL
	ETC	HTN
	IDC	♦MAL
	SAR	SCN
	SLD	SPE
	SSI	SST
		UPI
1N341	AMR	276 - 98
	ASI	CEN
	CRI	EDL
	ETC	HTN
	♦MAL	SAR
	SCN	SLD
	SPE	SSI
	SST	UPI
		WAB
1N342	AMR	275 -113
	ASI	CEN
	CRI	EDL
	ETC	HTN
	IDC	♦MAL
	SAR	SCN
	SLD	SPE
	SSI	SST
		UPI
1N343	AMR	276 - 84
	ASI	CEN
	CRI	EDL
	ETC	HTN
	♦MAL	SAR
	SCN	SLD
	SPE	SSI
	SST	UPI
1N344	AMR	275 - 97
	ASI	CEI
	CEN	CRI
	EDL	ETC
	HTN	IDC
	♦MAL	SAR
	SCN	SLD
	SPE	SSI
	SST	UPI
1N345	AMR	276 - 76
	ASI	CEN
	CRI	EDL
	ETC	HTN
	♦MAL	SAR
	SCN	SLD
	SPE	SSI
	SST	UPI
1N346	AMR	275 - 79
	ASI	CEN
	CRI	EDL
	ETC	HTN
	IDC	♦MAL
	SAR	SCN
	SLD	SPE
	SSI	SST
		UPI
1N347	AMR	280 -118
	ASI	CEI
	CEN	CRI
	EDL	ETC
	HTN	SAR
	SCN	SLD
	SPE	SSI
	UPI	WAB
1N348	AMR	276 - 66
	ASI	CEI
	CEN	CRI
	EDL	ETC
	HTN	IDC
	♦MAL	SCN
	SLD	SPE
	SSI	SST
1N349	AMR	275 - 58
	ASI	CEN
	CRI	EDL
	ETC	HTN
	IDC	♦MAL
	SCN	SLD
	SPE	SSI
	SST	UPI
1N350	AMR	232 -135
	AMX	CRI
	SCA	SPE
	SSI	STI
	UPI	UTX
1N351	AMR	232 -136
	AMX	CRI
	SCA	SPE
	SSI	STI
		UTX
1N352	AMR	232 -137
	AMX	CRI
	SCA	SPE
	SSI	SSY
	STI	UTX
1N353	AMR	232 -138
	AMX	ASI
	CRI	SCA
	SPE	SSI
	STI	UPI
	UTX	WAB
1N354	AMR	232 -139
	AMX	CRI
	SCA	SPE
	SSI	STI
		UTX
1N355	AMR	233 -110
	CEN	CRI
	MDC	SLD
	SPE	SSI
	SST	UPI
1N359	AMR	274 -190
	CEN	CRI
	ETC	HTN
	IDC	SCN
	SPE	SSI
		UPI

Δ-Registered with JEDEC by this manufacturer

♦-Mfr's data sheet available in microfilm service

1. TYPE No. CROSS INDEX

IN TYPE NUMBER SEQUENCE

TYPE No.	MFRS	Pg&Line
1N359A	AMR	274 -194
	CEN	
	HTN	
	SCN	
	SSI	
1N360	AMR	274 -130
	CEI	
	CRI	
	HTN	
	SCN	
	SSI	
1N360A	AMR	274 -202
	CEI	
	ETC	
	IDC	
	SPE	
1N361	AMR	274 -144
	CEI	
	CRI	
	HTN	
	SCN	
	SSI	
1N361A	AMR	274 -208
	CEI	
	ETC	
	IDC	
	SPE	
1N362	AMR	274 -153
	CEI	
	CRI	
	HTN	
	SPE	
1N362A	AMR	274 -213
	CEI	
	CRI	
	HTN	
	SPE	
1N363	AMR	274 -167
	CEI	
	CRI	
	HTN	
	SCN	
1N363A	AMR	275 - 4
	CEI	
	CRI	
	HTN	
	SPE	
1N364	AMR	274 -182
	CEN	
	ETC	
	SCN	
1N364A	AMR	275 - 20
	CEN	
	HTN	
	SPE	
1N365	AMR	401 - 25
	CEN	
	ETC	
	SCN	
1N365A	AMR	401 - 41
	CEN	
	HTN	
	SPE	
1N367	AMR	231 -136
	CRI	
	MIC	
	UPI	
1N368	AMR	274 -143
	CEN	
	HTN	
	SPE	
1N370	AMR	163 -118
	CRI	
	IDC	
1N371	AMR	164 - 14
	CRI	
	IDC	
1N372	AMR	165 - 40
	CRI	
	IDC	
1N373	AMR	166 -126
	CEN	
	HTN	
	SCE	
1N374	AMR	168 - 94
	CEN	
	HTN	
	SCE	
1N375	AMR	168 - 93
	CEN	
	HTN	
	SCE	
1N376	AMR	170 -197
	CEN	
	HTN	
	SCE	
1N377	AMR	173 -169
	CEN	
	HTN	
	SCE	
1N378	AMR	179 - 76
	CEN	
	HTN	
	SCE	
1N379	AMR	234 - 44
	CEI	
	CRI	
	HTN	
	SCE	
	SPE	
1N380	AMR	234 - 12
	ASI	
	CEN	
	ETC	
	IDC	
	SLD	
	SST	
1N381	AMR	233 -213
	CEI	
	CRI	
	HTN	
	SCE	
	SPE	
1N382	AMR	233 -192
	CEI	
	CRI	
	HTN	
	SCE	
	SPE	
1N383	AMR	233 -151
	CEI	
	CRI	
	HTN	
	SCE	
	SPE	
1N384	AMR	233 - 73
	CEI	
	CRI	
	HTN	
	SCE	
	SPE	
1N385	AMR	233 - 64
	CEN	
	ETC	
	IDC	
	SLD	
	SPE	
1N386	AMR	233 - 36
	CEN	
	ETC	
	SCE	
	SPE	
1N387	AMR	232 -219
	CEI	
	CRI	
	HTN	
	SCE	
	SPE	
1N388	AMR	232 -185
	CEN	
	ETC	
	SCE	
	SPE	
1N389	AMR	232 -171
	CEI	
	CRI	
	IDC	
	SLD	
	SST	
1N390	AMR	232 -145
	CEI	
	CRI	
	IDC	
	SLD	
	SST	
1N391	AMR	232 -141
	CEI	
	CRI	
	IDC	
	SLD	
	SST	
1N392	AMR	234 -195
	CEI	
	CRI	
	IDC	
	SLD	
1N393	AMR	232 -128
	CEI	
	CRI	
	IDC	
	SLD	
1N394	AMR	232 -124
	CEN	
	ETC	
	IDC	
1N411B	AMR	302 -123
	CEN	
	CRI	
	HTN	
	SAR	
1N412B	AMR	302 -138
	CEN	♦COO
	CRI	EDL
	HTN	SAR
	SPE	WAB
1N413B	AMR	302 -163
	CEN	♦COO
	CRI	EDL
	HTN	SAR
	SPE	WAB
1N417	AMR	242 -217
	CEN	CRI
	HTN	IDC
	SLD	SPE
1N418	AMR	242 -218
	CEN	CRI
	HTN	♦IDC
	SLD	SPE
1N419	AMR	242 -159
	CEN	CRI
	HTN	IDC
	SLD	SPE
1N429	AMR	174 - 94
	AMX	CODI
	CRI	DII
	♦GSE	SCA
	SPE	SSI
	STI	UPI
1N430	AMR	183 - 27
	CRI	NJS
	SPE	SSI
	STR	TRWS
1N430A	AMR	183 - 28
	NJS	SPE
	SSI	STR
	TRWS	UTX
1N430B	AMR	183 - 29
	HTN	SPE
	SSI	STR
	UPI	UTX
1N431	AMR	232 -125
	AMX	CRI
	SCA	SPE
	STI	UPI
		UTX
1N432	AMR	233 -188
	IDC	MDC
	SLD	SPE
	SST	STI
		UTX
1N432A	AMR	234 - 9
	IDC	SLD
	SPE	SST
		STI
1N432B	AMR	249 - 15
	IDC	SLD
	SPE	SST
1N433	AMR	233 - 46
	CRI	SPE
	STI	UTX
1N433A	AMR	233 -146
	SPE	STI
1N433B	AMR	249 - 84
		SPE
1N434	AMR	233 - 27
	CRI	MDC
	SPE	STI
		UTX
1N434A	AMR	233 - 71
	SPE	STI
1N434B	AMR	249 -100
		SPE
1N435	AMR	233 -193
	SPE	UPI
		UTX
1N440	AMR	275 -214
	CEI	CEN
	CRI	ETC
	HTN	IDC
	IDI	MAL
	SAR	SCN
	SPE	SSY
		UPI
1N440B	AMR	278 - 17
	CEI	CEN
	CRI	ETC
	HTN	IDC
	IDI	MAL
	SAR	SCN
	SLD	SPE
		UPI
1N441	AMR	276 - 4
	CEI	CEN
	ETC	HTN
	IDI	MAL
	SAR	SCN
	SPE	UPI
1N441B	AMR	278 - 57
	CEI	CEN
	CRI	ETC
	HTN	IDC
	IDI	MAL
	SAR	SCN
	SLD	SPE
	SST	UPI
1N442	AMR	276 - 11
	CEI	CEN
	CRI	ETC
	HTN	IDI
	MAL	SAR
	SCN	SPE
		UPI
1N442B	AMR	278 -102
	CEI	CEN
cont.next col.		
1N442B (cont.)	ETC	
	HTN	IDC
	IDI	MAL
	SAR	SCN
	SLD	SPE
	SST	UPI
1N443	AMR	276 - 19
	CEI	CEN
	CRI	ETC
	HTN	IDI
	MAL	SAR
	SCN	SPE
	SST	UPI
1N443B	AMR	278 -139
	CEI	CEN
	ETC	HTN
	IDC	IDI
	MAL	SAR
	SCN	SLD
	SPE	UPI
1N444	AMR	276 - 27
	CEI	CEN
	CRI	ETC
	HTN	IDC
	IDI	MAL
	SAR	SCN
		SPE
1N444B	AMR	278 -176
	CEI	CEN
	CRI	ETC
	HTN	IDC
	IDI	MAL
	SAR	SCN
	SLD	SPE
		SST
1N445	AMR	276 - 34
	CEI	CEN
	CRI	ETC
	HTN	IDC
	IDI	MAL
	SAR	SCN
	SPE	UPI
1N445B	AMR	278 -210
	CEI	CEN
	ETC	HTN
	IDC	IDI
	MAL	SAR
	SCN	SLD
	SPE	SST
1N447	AMR	233 -206
	CEI	CEN
	CRI	HTN
	MDC	SLD
	SPE	SST
	STR	UPI
1N448	CEN	233 -207
	CRI	HTN
	IDC	MDC
	SLD	SPE
	SST	STI
		STR
1N449	AMR	233 -209
	CEI	CEN
	CRI	HTN
	MDC	SLD
	SPE	SST
	SSY	STR
		UPI
1N450	AMR	233 -210
	ASI	CEI
	CEN	CRI
	HTN	IDC
	MDC	SLD
	SPE	SST
	STR	WAB
1N451	AMR	233 -211
	CRI	HTN
	IDC	SLD
	SPE	SST
1N452	AMR	231 -195
	CEI	CEN
	HTN	IDC
	MDC	SLD
	SPE	SST
		UPI
1N453	AMR	231 -196
	CEI	CEN
	CRI	GDC
	HTN	IDC
	MDC	SLD
	SPE	SST
1N454	AMR	232 - 26
	CEN	CRI
	HTN	MDC
	SLD	SPE
	SST	UPI
1N455	AMR	232 - 51
	CEN	CRI
	HTN	MDC
	SLD	SPE
	SST	UPI
1N456	AMR	234 - 78
	♦APD	ASI
	CEN	CODI
	CRI	EAS
	EDL	ETC
	♦FSC	♦GDC
	HTN	IDC
	MDC	MSC
	NJS	SCE
	SLD	SPE
	SST	SSY
	STI	UPI
	UPI	WAB
cont.next col.		
1N456 (cont.)	STI	
	♦UNI	UPI
		WAB
1N456A	AMR	235 -125
	♦APD	ASI
	CEN	CODI
	CRI	EAS
	FSC	GDC
	HTN	IDC
	♦ITTG	MDC
	NJS	SCE
	SLD	SPE
	SST	SSY
	STI	♦UNI
	UPI	WAB
1N457	AMR	234 - 30
	♦APD	ASI
	CEN	CODI
	CRI	EAS
	EDL	ETC
	♦FSC	♦GDC
	HTN	IDC
	♦ITTG	MDC
	MSC	NJS
	SCE	SLD
	SPE	SPR
	SST	SSY
	STI	♦UNI
	UPI	WAB
1N457A	AMR	235 -126
	♦APD	ASI
	CEN	CODI
	CRI	EAS
	FSC	GDC
	HTN	IDC
	MDC	MSC
	NJS	SCE
	SLD	SPE
	SST	STI
	TIC	♦UNI
	UPI	WAB
1N457M	SPE	234 - 31
		UPI
1N458	AMR	233 -184
	♦APD	ASI
	CEN	CODI
	CRI	EAS
	EDL	ETC
	♦FSC	HTN
	MDC	MSC
	NJS	SCE
	SPE	SST
	SSY	STI
	♦UNI	UPI
		WAB
1N458A	AMR	235 -127
	♦APD	ASI
	CEN	CODI
	EAS	FSC
	HTN	♦ITTG
	MDC	MSC
	NJS	SCE
	SPE	SPR
	SST	STI
	♦UNI	WAB
1N459	AMR	233 - 47
	ASI	CEN
	CODI	CRI
	EAS	EDL
	ETC	♦FSC
	HTN	MDC
	MSC	NJS
	SCE	SPE
	SPR	SST
	STI	♦UNI
	UPI	WAB
1N459A	AMR	235 -128
	ASI	CEN
	CODI	EAS
	FSC	HTN
	♦ITTG	MDC
	MSC	NJS
	SCE	SPE
	SPR	SST
	STI	♦UNI
	UPI	WAB
1N460	ALP	233 - 70
	AMR	CRI
	HTN	SLD
	SPE	SST
	STI	UPI
		UTX
1N460A	AMR	233 -201
	HTN	SCE
	SLD	SPE
	SST	STI
1N460B	AMR	249 - 58
	HTN	SLD
	SPE	SST
1N461	AMR	233 -202
	ASI	CEN
	CODI	CRI
	GDC	HTN
	MDC	MSC
	SCE	SLD
	SPE	SST
	SSY	STI
	♦UNI	UPI
1N461A	AMR	235 -129
	ASI	CEN
	CODI	CRI
	FSC	HTN
cont.next page		

Δ-Registered with JEDEC by this manufacturer

♦-Mfr's data sheet available in microfilm service

1. TYPE No. CROSS INDEX

IN TYPE NUMBER SEQUENCE

TYPE No.	MFRS	Pg&Line
1N461A		
(cont.)	MDC	
	SCE	
	SLD	
	SPE	
	STI	
	♦UNI	
	UPI	
	WAB	
1N462	AMR	233 -130
	ASI	
	CEN	
	CODI	
	CRI	
	FSC	
	GDC	
	HTN	
	MDC	
	MSC	
	SCE	
	SLD	
	SPE	
	SPR	
	SST	
	SSY	
	♦UNI	
	UPI	
	WAB	
1N462A	AMR	235 -130
	CEN	
	CODI	
	FSC	
	HTN	
	MDC	
	SCE	
	SLD	
	SPE	
	SST	
	STI	
	♦UNI	
	UPI	
1N463	AMR	232 -192
	ASI	
	CEN	
	CODI	
	CRI	
	FSC	
	GDC	
	HTN	
	MDC	
	MSC	
	SCE	
	SPE	
	SSY	
	STI	
	♦UNI	
	WAB	
1N463A	AMR	235 -131
	CEN	
	CODI	
	CRI	
	FSC	
	HTN	
	MDC	
	SCE	
	SPE	
	STI	
	♦UNI	
1N464	AMR	233 - 48
	ASI	
	CEN	
	CODI	
	CRI	
	GDC	
	HTN	
	MDC	
	MSC	
	SCE	
	SPE	
	SSY	
	STI	
	♦UNI	
	UPI	
1N464A	AMR	235 -132
	CEN	
	CODI	
	CRI	
	FSC	
	HTN	
	MDC	
	SCE	
	SPE	
	STI	
	♦UNI	
	WAB	
1N465	AMR	164 -113
	AMX	
	CODI	
	CRI	
	SCA	
	SCE	
	SLD	
	SPE	
	SSI	
	SST	
	STI	
	UTX	
1N465A	AMR	164 -111
	AMX	
	CODI	
	SCA	
	SCE	
	SPE	
	SSI	
	STI	
	UTX	
1N465B	AMR	164 -110
	AMX	
	CODI	
	SCA	
	SCE	
	SPE	
	SSI	
	STI	
	UTX	
1N466	AMR	166 -129
	AMX	
	CODI	
	CRI	
	SCA	
	SCE	
	SLD	
	SPE	
	SSI	
	SST	
	STI	
	UPI	
	UTX	
1N466A	AMR	165 -184
	AMX	
	CODI	
	CRI	
	SCA	
	SCE	
	SPE	
	SSI	
	STI	
	UTX	
1N466B	AMR	165 -183
	AMX	
	CODI	
	SCA	
	SCE	
	SPE	
	SSI	
	STI	
	UTX	
1N467	AMR	168 -101
	AMX	
	CODI	
	CRI	
	SCA	
	SCE	
	SLD	
	SPE	
	SSI	
	SST	
	STI	
	UTX	
1N467A	AMR	168 - 97
	AMX	
	CODI	
	SCA	
	SCE	
	SPE	
	SSI	
	STI	
	UTX	
1N467B	AMR	168 - 95
	AMX	
	CODI	
	SCA	
	SCE	
	SPE	
	SSI	
	STI	
	UTX	
1N468	AMX	170 -186
	CODI	
	CRI	
	SCA	
	SCE	
	SLD	
	SPE	
	SSI	
	SST	
	STI	
	UTX	
1N468A	AMX	170 -177
	CODI	
	SCA	
cont.next col.		

TYPE No.	MFRS	Pg&Line
1N468A		
(cont.)	SCE	
	SPE	
	SSI	
	STI	
	UTX	
1N468B	AMX	170 -176
	CODI	
	SCA	
	SCE	
	SPE	
	SSI	
	UTX	
1N469	AMX	173 -155
	CODI	
	CRI	
	SCA	
	SCE	
	SLD	
	SPE	
	SSI	
	SST	
	STI	
	UPI	
	UTX	
1N469A	AMX	173 -149
	CODI	
	SCA	
	SCE	
	SPE	
	SSI	
	STI	
	UTX	
1N469B	AMX	173 -147
	CODI	
	SCA	
	SCE	
	SPE	
	SSI	
	STI	
	UTX	
1N470	AMX	179 - 43
	CODI	
	CRI	
	SCA	
	SCE	
	SLD	
	SPE	
	SSI	
	SST	
	STI	
1N470A	AMX	179 - 37
	CODI	
	SCA	
	SCE	
	SPE	
	SSI	
	STI	
1N470B	AMX	179 - 36
	CODI	
	SCA	
	SCE	
	SPE	
	SSI	
	STI	
1N471	AMX	228 - 60
	CODI	
	SCE	
	SLD	
	SPE	
	SSI	
	SST	
	STI	
1N471A	AMX	165 -185
	CODI	
	CRI	
	SCE	
	SPE	
	SSI	
	STI	
1N471B	AMX	228 - 59
	CODI	
	SCE	
	SPE	
	SSI	
	STI	
1N472	AMX	228 - 68
	CODI	
	SCE	
	SLD	
	SPE	
	SSI	
	SST	
	STI	
1N472A	AMX	168 - 98
	CODI	
	CRI	
	SCE	
	SPE	
	SSI	
	STI	
1N472B	AMX	228 - 66
	CODI	
	SCE	
	SPE	
	SSI	
	STI	
1N473	AMX	228 - 76
	CODI	
	SCE	
	SLD	
	SPE	
	SSI	
	SST	
	STI	
	WAB	
1N473A	AMX	170 -178
	CODI	
	SCE	
	SPE	
	SSI	
	STI	
1N473B	AMX	228 - 74
	CODI	
	SCE	
	SPE	
	SSI	
	STI	
1N474	AMX	228 - 85
	CODI	
	CRI	
	SCE	
	SLD	
	SPE	
	SSI	
	SST	
	STI	
	UPI	
1N474A	AMX	173 -150
	CODI	
	SCE	
	SPE	
	SSI	
	STI	
1N474B	AMX	228 - 83
	CODI	
	SCE	
	SPE	
	SSI	
	STI	
1N475	AMX	228 - 99
	CODI	
	CRI	
	IDC	
	SCE	
	SLD	
	SPE	
	SSI	
	SST	
	STI	
	UPI	
	UTX	
1N475A	AMX	179 - 38
	CODI	
	IDC	
	SCE	
	SPE	
	SSI	
	STI	
1N475B	AMX	228 - 97
	CODI	
	IDC	
	SCE	
	SPE	
	SSI	
	STI	
1N476	CEN	233 - 90
	CRI	
	HTN	
	MDC	
	SLD	
	SPE	
	SST	
1N477	CEN	233 - 91
	CRI	
	HTN	
cont.next col.		

TYPE No.	MFRS	Pg&Line
1N477		
(cont.)	SLD	
	SPE	
	SST	
1N478	ASI	233 -131
	CEN	
	CRI	
	HTN	
	MDC	
	SLD	
	SPE	
	SST	
	STI	
	WAB	
1N479	CEN	233 -132
	CRI	
	HTN	
	SLD	
	SPE	
	SST	
1N480	CEN	249 - 39
	CRI	
	HTN	
	♦IDC	
	MDC	
	SLD	
	SPE	
	SST	
	STI	
1N482	ASI	234 -143
	CEI	
	CEN	
	CRI	
	ETC	
	GDC	
	HITJ	
	HTN	
	IDC	
	MDC	
	MSC	
	SCE	
	SLD	
	SPE	
	SST	
	STI	
	♦UNI	
	UPI	
1N482A	ASI	235 -133
	CEN	
	ETC	
	HITJ	
	HTN	
	IDC	
	MDC	
	MSC	
	SCE	
	SLD	
	SPE	
	SST	
	♦UNI	
	UPI	
1N482B	ASI	235 -134
	CEN	
	ETC	
	FSC	
	HTN	
	IDC	
	MDC	
	MSC	
	SCE	
	SLD	
	SPE	
	SST	
	STI	
	♦UNI	
	UPI	
	WAB	
1N482C	SLD	231 -197
	SPE	
	SST	
	UPI	
1N483	ASI	234 -144
	CEN	
	CRI	
	GDC	
	HITJ	
	HTN	
	MDC	
	MSC	
	NJS	
	SCE	
	SLD	
	SPE	
	SST	
	SSY	
	STI	
	♦UNI	
	UPI	
	WAB	
1N483A	ASI	235 -135
	CEN	
	HITJ	
	HTN	
	♦ITTG	
	MDC	
	MSC	
	NJS	
	SCE	
	SLD	
	SPE	
	SST	
	SSY	
	STI	
	♦UNI	
	UPI	
	WAB	
1N483B	APD	235 -136
	ASI	
	CEN	
	FSC	
	HTN	
	♦ITTG	
	MDC	
	MSC	
	NJS	
	SCE	
	SPE	
	SSY	
	STI	
	♦UNI	
	UPI	
	WAB	
1N483C	SPE	231 -198
	UPI	
1N484	ASI	234 -145
	CEN	
	CRI	
	ETC	
	GDC	
	HTN	
	IDC	
	MDC	
	MSC	
	NJS	
	SCE	
	SPE	
	STI	
	♦UNI	
	WAB	
1N484A	ASI	235 -137
	CEN	
	ETC	
	HTN	
	IDC	
	♦ITTG	
	MDC	
	MSC	
	NJS	
	SCE	
	SPE	
	STI	
	♦UNI	
	WAB	
1N484B	ASI	235 -138
	CEN	
	ETC	
	FSC	
	HTN	
	IDC	
	♦ITTG	
	MDC	
	MSC	
	SCE	
	SPE	
	STI	
	♦UNI	
	WAB	
1N484C	SPE	231 -199
1N485	ASI	234 -146
	CEN	
	CRI	
	ETC	
	GDC	
	HTN	
	IDC	
	♦ITTG	
	MDC	
	MSC	
	NJS	
	SCE	
	SPE	
	SPR	
	SSI	
	SSY	
	STI	
	♦UNI	
	UPI	
	WAB	

TYPE No.	MFRS	Pg&Line
1N485A	ASI	235 -139
	CEN	
	CRI	
	ETC	
	HTN	
	IDC	
	♦ITTG	
	MDC	
	MSC	
	NJS	
	SCE	
	SPE	
	SSI	
	TIC	
	♦UNI	
	WAB	
1N485B	ASI	235 -140
	CEN	
	CRI	
	ETC	
	FSC	
	HTN	
	♦ITTG	
	MDC	
	MSC	
	NJS	
	SCE	
	SPE	
	SPR	
	SSI	
	STI	
	♦UNI	
	UPI	
	WAB	
1N485C	SPE	231 -200
1N486	ASI	234 -147
	CEN	
	CRI	
	ETC	
	HTN	
	IDC	
	♦ITTG	
	MDC	
	MSC	
	SCE	
	SPE	
	SSI	
	SSY	
	STI	
	WAB	
1N486A	ASI	235 -141
	CEN	
	CRI	
	ETC	
	HTN	
	IDC	
	MDC	
	MSC	
	SCE	
	SPE	
	SSI	
	WAB	
1N486B	ASI	235 -142
	CEN	
	ETC	
	FSC	
	HTN	
	♦ITTG	
	MDC	
	MSC	
	SCE	
	SPE	
	SSI	
	STI	
	WAB	
1N487	CEN	234 -148
	CRI	
	ETC	
	HTN	
	IDC	
	MDC	
	SCE	
	SPE	
	SSI	
	STI	
	TIC	
1N487A	CEN	235 -143
	ETC	
	HTN	
	IDC	
	MDC	
	SCE	
	SPE	
	SSI	
1N487B	CEN	235 -144
	HTN	
	MSC	
	SCE	
	SPE	
	SSI	
	STI	
1N488	CEN	234 -149
	CRI	
	ETC	
	HTN	
	IDC	
	MDC	
	SCE	
	SPE	
	SSI	
	STI	
1N488A	CEN	235 -145
	ETC	
	HTN	
	IDC	
	MDC	
	SCE	
	SPE	
	SSI	
1N488B	CEN	235 -146
	ETC	
	HTN	
	IDC	
	SCE	
	SPE	
	SSI	
	STI	
1N490	CEN	249 - 40
	CRI	
	♦IDC	
	MDC	
	SLD	
	SPE	
	SST	
	SSY	
	STI	
1N497	CEI	234 - 58
	CEN	
	CRI	
	GDC	
	HTN	
	IDC	
	MDC	
	SCE	
	SLD	
	SPE	
	SST	
	STI	
	UPI	
1N498	CEI	234 - 59
	CEN	
	CRI	
	GDC	
	HTN	
	MDC	
	SCE	
	SLD	
	SPE	
	SST	
	STI	
	UPI	
1N499	ASI	234 - 60
	CEN	
	CRI	
	GDC	
	HTN	
	IDC	
	MDC	
	SLD	
	SPE	
	SST	
	UPI	
	WAB	
1N500	CEI	234 - 61
	CEN	
	CRI	
	GDC	
	HTN	
	IDC	
	MDC	
	SCE	
	SLD	
	SPE	
	SST	
	STI	
	UPI	
1N501	CEI	234 - 48
	CEN	
	CRI	
	HTN	
	IDC	
	MDC	
	SLD	
	SPE	
	SST	
1N502	CEI	234 - 17
	CEN	
	CRI	
cont.next col.		

TYPE No.	MFRS	Pg&Line
1N502		
(cont.)	HTN	
	MDC	
	SLD	
	SPE	
	SST	
	STI	
1N527	CEN	231 - 31
	CRI	
	GDC	
	HTN	
	IDC	
	SLD	
	SPE	
	SST	
	STI	
	UPI	
1N530	CEN	275 -211
	CRI	
	ETC	
	HTN	
	IDC	
	NJS	
	SCN	
	SLD	
	SPE	
	SST	
	UPI	
1N531	CEI	276 - 1
	CEN	
	CRI	
	ETC	
	HTN	
	IDC	
	NJS	
	SCN	
	SLD	
	SPE	
	SST	
	UPI	
1N532	CEI	276 - 8
	CEN	
	CRI	
	ETC	
	HTN	
	IDC	
	NJS	
	SAR	
	SCN	
	SLD	
	SPE	
	SST	
	UPI	
1N533	CEI	276 - 16
	CEN	
	CRI	
	ETC	
	HTN	
	IDC	
	NJS	
	SAR	
	SCN	
	SLD	
	SPE	
	SST	
1N534	CEN	276 - 24
	CRI	
	ETC	
	HTN	
	IDC	
	NJS	
	SAR	
	SCN	
	SLD	
	SPE	
	SST	
1N535	CEI	276 - 30
	CEN	
	CRI	
	ETC	
	HTN	
	IDC	
	NJS	
	SAR	
	SCN	
	SLD	
	SPE	
	SST	
1N536	CEI	277 -207
	CEN	
	CRI	
	ETC	
	HTN	
	IDC	
	IDI	
	MAL	
	NJS	
	SAR	
	SCN	
	♦SLCB	
	SLD	
	SPE	
	SST	
	UPI	
1N537	CEI	278 - 18
	CEN	
	CRI	
	ETC	
	HTN	
	IDC	
	IDI	
	NJS	
	SAR	
	SCN	
	♦SLCB	
	SLD	
	SPE	
	SST	
	UPI	
1N538	CEI	278 - 58
	CEN	
	CRI	
	ETC	
	HTN	
	IDC	
	MAL	
	NJS	
	SAR	
	SCN	
	♦SLCB	
	SLD	
	SPE	
	SST	
	TIC	
	UPI	
1N539	CEI	278 -103
	CEN	
	CRI	
	ETC	
	HTN	
	IDC	
	IDI	
	MAL	
	NJS	
	SAR	
	SCN	
	SLCB	
	SLD	
	SPE	
	SST	
	UPI	
1N543A	CRI	405 -190
	EDL	
	SPE	
	UTX	
1N547	ASI	278 -212
	CEI	
	CEN	
	CRI	
	ETC	
	HTN	
	IDI	
	MAL	
	SAR	
	SCN	
	♦SLCB	
	SLD	
	SPE	
	SST	
	TIC	
	UPI	
	WAB	
1N548	CRI	276 - 39
	IDC	
	SPE	
1N549	CRI	405 -209
	IDC	
	SPE	
1N550	CEN	276 -163
	CRI	
	EDL	
	ETC	
	HTN	
	IDC	
	SAR	
	SCN	
	SLCB	
	SLD	
	SPE	
	SPR	
	SSI	
	SST	
1N551	CEN	276 -187
	CRI	
	EDL	
	ETC	
	HTN	
cont.next page		

1. TYPE No. CROSS INDEX

IN TYPE NUMBER SEQUENCE

TYPE No.	MFRS	Pg&Line
1N551		
(cont.)	IDC	
SAR	SCN	
SLCB	SLD	
SPE	SSI	
SST	UPI	
1N552	CEN	276 -203
CRI	EDL	
ETC	HTN	
SAR	SCN	
SLCB	SLD	
SPE	SSI	
SST	UPI	
1N553	CEN	277 - 7
CRI	EDL	
ETC	HTN	
SAR	SCN	
SLCB	SLD	
SPE	SSI	
SST	UPI	
1N554	CEN	277 - 31
CRI	EDL	
ETC	HTN	
SAR	SCN	
SLCB	SLD	
SPE	SSI	
	SST	
1N555	CEN	277 - 46
CRI	EDL	
ETC	HTN	
SAR	SCN	
SLCB	SLD	
SPE	SSI	
	SST	
1N560	ASI	275 -197
CEN	CRI	
DII	EDI	
ETC	HTN	
IDC	IDI	
SAR	SCN	
SLCB	SPE	
SSI	SSY	
TIC	UPI	
	WAB	
1N561	ASI	401 - 70
CEN	CRI	
DII	EDI	
ETC	HTN	
IDC	SAR	
SCN	SLCB	
SPE	SSI	
SST	TIC	
UPI	WAB	
1N562	ASI	276 -113
CEN	CRI	
EDL	ETC	
HTN	IDC	
SAR	SCN	
SPE	SSI	
1N563	ASI	401 - 81
CEN	CRI	
EDL	ETC	
HTN	IDC	
SCN	SPE	
	SSI	
1N566	IDC	231 -146
	SPE	
1N567	CEN	232 - 21
CRI	HTN	
IDC	SPE	
1N568	CEI	231 - 64
CEN	CRI	
HTN	♦IDC	
SPE	STR	
	UPI	
1N569	CEI	232 - 42
CEN	CRI	
HTN	IDC	
SPE	STR	
	UPI	
1N570	CEI	411 - 61
CRI	INRJ	
SCN	SPE	
	SSI	
1N571	CRI	250 - 61
GDC	HTN	
♦IDC	SLD	
SPE	SSI	
SST	STI	
1N588	CRI	410 -220
DII	SCN	
SPE	SSI	
	UPI	
1N589	CRI	411 - 17
DII	SCN	
SPE	SSI	
1N590	CRI	410 -202
SPE	SSI	
1N591	CRI	410 -203
SPE	SSI	
1N596	CEN	275 - 10
CRI	IDC	
SCN	SPE	
	SSI	
1N597	CEN	275 - 18
CRI	IDC	
SCN	SPE	
	SSI	
1N598	CEN	401 - 39
SCN	SPE	
	SSI	
1N599	ASI	275 -207
CEI	CEN	
cont.next col.		

TYPE No.	MFRS	Pg&Line
1N599		
(cont.)	CRI	
ETC	HTN	
IDC	MAL	
SAR	SCN	
SLD	SPE	
SST	UPI	
	WAB	
1N599A	CEI	275 -208
CEN	ETC	
HTN	IDC	
MAL	SAR	
SCN	SLD	
SPE	SST	
	UPI	
1N600	ASI	275 -215
CEI	CEN	
CRI	ETC	
HTN	IDC	
MAL	SAR	
SCN	SLD	
SPE	SST	
UPI	WAB	
1N600A	CEI	275 -216
CEN	ETC	
HTN	IDC	
MAL	SAR	
SCN	SLD	
SPE	SST	
	UPI	
1N601	CEI	275 -218
CEN	CRI	
ETC	HTN	
IDC	MAL	
SAR	SCN	
SLD	SPE	
SST	UPI	
1N601A	CEI	275 -219
CEN	ETC	
HTN	IDC	
MAL	SAR	
SCN	SLD	
SPE	SST	
	UPI	
1N602	CEI	276 - 5
CEN	CRI	
ETC	HTN	
IDC	MAL	
SAR	SCN	
SLD	SPE	
SST	UPI	
1N602A	CEI	276 - 6
CEN	ETC	
HTN	IDC	
MAL	SAR	
SCN	SLD	
SPE	SST	
	UPI	
1N603	CEI	276 - 12
CEN	CRI	
ETC	HTN	
IDC	MAL	
SAR	SCN	
SLD	SPE	
SST	UPI	
1N603A	CEI	276 - 13
CEN	ETC	
HTN	IDC	
MAL	SAR	
SCN	SLD	
SPE	SST	
	UPI	
1N604	CEI	276 - 20
CEN	CRI	
ETC	HTN	
IDC	MAL	
SAR	SCN	
SLD	SPE	
SST	UPI	
1N604A	CEI	276 - 21
CEN	ETC	
HTN	IDC	
MAL	SAR	
SCN	SLD	
SPE	SST	
	UPI	
1N605	CEI	276 - 28
CEN	CRI	
ETC	HTN	
IDC	MAL	
SAR	SCN	
SLD	SPE	
SST	UPI	
1N605A	CEI	276 - 29
CEN	ETC	
HTN	IDC	
MAL	SAR	
SCN	SLD	
SPE	SST	
1N606	CEI	276 - 35
CEN	CRI	
ETC	HTN	
IDC	MAL	
SAR	SCN	
SLD	SPE	
	SST	
1N606A	CEI	276 - 36
CEN	ETC	
HTN	IDC	
MAL	SAR	
SCN	SLD	
SPE	SST	
1N607	ASI	279 - 68
cont.next col.		

TYPE No.	MFRS	Pg&Line
1N607		
(cont.)	CEN	
CRI	EDL	
ETC	HTN	
IDC	♦MAL	
SAR	SCN	
SLCB	SLD	
SOD	SPE	
SSI	SST	
1N607A	ASI	279 - 69
CEN	ETC	
HTN	IDC	
♦MAL	SAR	
SCN	SLCB	
SLD	SOD	
SPE	SSI	
	SST	
1N608	ASI	279 - 74
CEN	CRI	
EDL	ETC	
HTN	IDC	
♦MAL	SAR	
SCN	SLCB	
SLD	SPE	
SSI	SST	
	WAB	
1N608A	ASI	279 - 75
CEN	EDL	
ETC	HTN	
IDC	♦MAL	
SAR	SCN	
SLCB	SLD	
SOD	SPE	
SSI	SST	
1N609	ASI	279 - 76
CEN	CRI	
EDL	ETC	
HTN	♦MAL	
SAR	SCN	
SLCB	SLD	
SOD	SPE	
SSI	SST	
1N609A	ASI	279 - 77
CEN	EDL	
ETC	HTN	
♦MAL	SAR	
SCN	SLCB	
SLD	SOD	
SPE	SSI	
	SST	
1N610	ASI	279 - 84
CEN	CRI	
EDL	ETC	
GDC	HTN	
♦MAL	SAR	
SCN	SLCB	
SLD	SOD	
SPE	SSI	
SST	UPI	
1N610A	ASI	279 - 85
CEN	EDL	
ETC	HTN	
♦MAL	SAR	
SCN	SLCB	
SLD	SOD	
SSI	SST	
	UPI	
1N611	ASI	279 - 90
CEN	CRI	
EDL	ETC	
HTN	♦MAL	
SAR	SCN	
SLCB	SLD	
SOD	SPE	
SSI	SST	
	UPI	
1N611A	ASI	279 - 91
CEN	EDL	
ETC	HTN	
♦MAL	SAR	
SCN	SLCB	
SLD	SOD	
SPE	SSI	
SST	UPI	
1N612	ASI	279 -100
CEN	CRI	
EDL	ETC	
HTN	IDC	
♦MAL	SAR	
SCN	SLCB	
SLD	SOD	
SPE	SSI	
SST	UPI	
1N612A	ASI	279 -101
CEN	EDL	
ETC	HTN	
IDC	♦MAL	
SAR	SCN	
SLCB	SLD	
SOD	SPE	
SSI	SST	
TIC	UPI	
1N613	ASI	279 -104
CEN	CRI	
EDL	ETC	
HTN	♦MAL	
SAR	SCN	
SLCB	SLD	
SOD	SPE	
SSI	SST	
1N613A	ASI	279 -105
CEN	EDL	
ETC	HTN	
cont.next col.		

TYPE No.	MFRS	Pg&Line
1N613A		
(cont.)	♦MAL	
SAR	SCN	
SLCB	SLD	
SOD	SPE	
SSI	SST	
1N614	ASI	279 -116
CEN	CRI	
EDL	ETC	
HTN	IDC	
♦MAL	SAR	
SCN	SLCB	
SLD	SPE	
SSI	SST	
	WAB	
1N614A	ASI	279 -117
CEN	EDL	
ETC	HTN	
IDC	♦MAL	
SAR	SCN	
SLCB	SLD	
SOD	SPE	
SSI	SST	
1N616	CEN	233 - 9
CRI	MDC	
SLD	SOD	
SPE	SST	
SSY	STR	
	UPI	
1N617	CEN	233 - 92
CRI	MDC	
SLD	SOD	
SPE	SST	
1N618	CEN	233 -133
CRI	MDC	
SLD	SOD	
SPE	SST	
	STI	
1N619	♦APD	231 - 57
CEN	CRI	
ETC	IDC	
SCE	SOD	
SPE	UPI	
1N622	ASI	231 - 84
CRI	SPE	
	WAB	
1N625	ASI	249 - 12
CEN	CRI	
FSC	GDC	
HTN	IDC	
MDC	MSC	
SCE	SLD	
SPE	SST	
STI	TIC	
♦UNI	UPI	
	WAB	
1N625A	CEN	249 - 7
HTN	IDC	
SLD	SPE	
SST	STI	
1N626	ASI	249 - 32
CEN	CRI	
FSC	HTN	
IDC	MDC	
MSC	SCE	
SLD	SPE	
SST	♦UNI	
	WAB	
1N626A	CEN	249 - 14
HTN	IDC	
SLD	SPE	
	SST	
1N627	ASI	249 - 75
CEN	CRI	
FSC	GDC	
HTN	IDC	
MDC	MSC	
SCE	SLD	
SPE	SST	
♦UNI	WAB	
1N627A	CEN	249 - 49
HTN	IDC	
SLD	SPE	
	SST	
1N628	CEN	249 - 96
CRI	FSC	
GDC	HTN	
IDC	MDC	
MSC	SCE	
SPE	STI	
♦UNI	UPI	
1N628A	CEN	249 - 83
HTN	IDC	
	SPE	
1N629	ASI	249 -121
CEN	CRI	
FSC	HTN	
MDC	MSC	
SCE	SPE	
SSY	STI	
♦UNI	WAB	
1N629A	CEN	249 - 99
HTN	IDC	
	SPE	
1N631	CEN	242 -219
CRI	IDC	
MDC	SCE	
SLD	SPE	
SST	STI	
1N632	CEN	242 -220
CRI	♦IDC	
MDC	SCE	
SLD	SPE	
cont.next col.		

TYPE No.	MFRS	Pg&Line
1N632		
(cont.)	SST	
SSY	STI	
1N633	CRI	243 - 16
IDC	MDC	
SCE	SLD	
SPE	SST	
1N634	CEN	234 -109
CRI	IDC	
MDC	SCE	
SLD	SPE	
SST	SSY	
	STI	
1N635	CRI	234 -202
IDC	SCE	
	SPE	
1N636	CEI	232 -196
CEN	CRI	
HTN	MDC	
SCE	SLD	
SPE	SST	
SSY	UPI	
1N643	ASI	243 - 74
CEN	CRI	
ETC	♦FSC	
HTN	IDC	
MDC	♦MSC	
SPE	SSI	
STI	♦UNI	
UPI	WAB	
1N643A	CEN	243 - 75
ETC	HTN	
SCE	SPE	
SSI	STI	
1N645A	Δ♦UNI	236 -131
ASI	CEN	
EDL	ETC	
GDC	HTN	
NJS	SPE	
SSI	STI	
STR	WAB	
1N645B	CEN	236 -132
ETC	HTN	
IDC	SPE	
SSI	STR	
1N646	Δ♦UNI	276 - 80
CEN	CRI	
EDL	ETC	
♦GIC	HTN	
MSC	NJS	
♦SLCB	SPE	
SSI	SST	
STI	STR	
	UPI	
1N647	Δ♦UNI	276 - 91
ASI	CEN	
CRI	EDL	
ETC	♦GIC	
HTN	IDC	
MSC	NJS	
♦SLCB	SPE	
SSI	SST	
STI	STR	
TIC	UPI	
	WAB	
1N648	Δ♦UNI	276 - 99
CEN	CRI	
EDL	♦GIC	
HTN	IDC	
MSC	NJS	
♦SLCB	SPE	
SSI	STI	
	STR	
1N649	Δ♦UNI	276 -104
ASI	CEN	
CRI	EDL	
♦GIC	HTN	
IDC	MSC	
NJS	♦SLCB	
SPE	SSI	
STI	STR	
TIC	UPI	
	WAB	
1N658	ASI	243 - 50
CEN	CRI	
ETC	♦FSC	
GDC	HTN	
IDC	MDC	
♦MSC	SCE	
SLD	SPE	
SSI	SSY	
STR	UNI	
UPI	WAB	
1N658A	CEN	243 - 51
HTN	IDC	
SCE	SLD	
SPE	SSI	
	STR	
1N659	Δ♦UNI	249 - 23
ASI	CEN	
CRI	FSC	
GDC	HTN	
IDC	MDC	
MSC	SCE	
SLD	SPE	
STR	UPI	
	WAB	
1N659A	CEN	249 - 24
HTN	IDC	
SCE	SLD	
SPE	STR	
1N660	ASI	249 - 63
CEN	CRI	
cont.next page		

Δ-Registered with JEDEC by this manufacturer

♦-Mfr's data sheet available in microfilm service

1. TYPE No. CROSS INDEX

IN TYPE NUMBER SEQUENCE

TYPE No.	MFRS	Pg&Line
0		
nt.)	ETC	
FSC	GDC	
HTN	MDC	
♦MSC	SPE	
TIC	WAB	
0A	CEN	249 - 64
HTN	IDC	
SCE	SPE	
1	Δ ♦UNI	249 -112
ASI	CEN	
CRI	FSC	
HTN	MDC	
♦MSC	SCE	
SPE	STI	
TIC	UPI	
	WAB	
1A	CEN	249 -113
HTN	IDC	
	SPE	
2	ASI	243 - 14
CEN	CRI	
♦FSC	GDC	
HTN	MDC	
♦MSC	SCE	
SLD	SPE	
SST	STI	
♦UNI	WAB	
2A	CEN	243 - 20
FSC	HTN	
♦MSC	SCE	
SLD	SPE	
SST	STI	
3	ASI	243 - 15
CEN	CRI	
♦FSC	GDC	
HTN	IDC	
MDC	♦MSC	
SCE	SLD	
SPE	SST	
♦UNI	WAB	
3A	CEN	243 - 21
HTN	IDC	
♦MSC	SCE	
SLD	SPE	
	SST	
4	CEN	181 -159
HTN	IDC	
MSC	SPE	
SSI	WAB	
5	CRI	190 -149
HTN	IDC	
MSC	SPE	
	SSI	
6	CRI	194 -147
HTN	IDC	
MSC	SPE	
SSI	UPI	
	WAB	
7	CRI	198 - 58
HTN	IDC	
MSC	SPE	
	SSI	
	CRI	201 -163
HTN	IDC	
MSC	SPE	
	SSI	
	CRI	204 -206
HTN	IDC	
MSC	SPE	
	SSI	
	CRI	216 -154
HTN	IDC	
MSC	SPE	
	SSI	
	CRI	220 - 71
TN	IDC	
SC	SPE	
SI	SSY	
	CRI	223 -162
N	IDC	
C	SPE	
	SSI	
	CEN	276 - 85
N	MDC	
E	SSI	
	UPI	
	CRI	169 -192
I	IDC	
	SSI	
	CRI	174 -169
	IDC	
	SPE	
	SSI	
	ASI	275 - 47
	CRI	
	GDC	
	IDC	
	SPE	
	UPI	
	WAB	
	ASI	276 - 60
	CRI	
	HTN	
	MDC	
	SSI	
	WAB	
	ASI	275 - 67
	CRI	
	HTN	
	SPE	
	SSY	
	WAB	

TYPE No.	MFRS	Pg&Line
1N679	CEN	276 - 70
CRI	ETC	
HTN	MDC	
SPE	SSI	
	UPI	
1N681	CEN	274 -101
ETC	HTN	
IDC	MDC	
SPE	SSI	
SSY	UPI	
1N682	CEN	274 -211
ETC	HTN	
MDC	SPE	
SSI	UPI	
1N683	CEN	274 -102
ETC	HTN	
MDC	SPE	
SSI	UPI	
1N684	ASI	274 -220
CEN	ETC	
HTN	MDC	
SPE	SSI	
UPI	WAB	
1N685	CEN	274 -103
HTN	IDC	
MDC	SPE	
	SSI	
1N686	CEN	275 - 5
HTN	IDC	
MDC	SPE	
	SSI	
1N687	CEN	274 -104
ETC	HTN	
IDC	MDC	
SPE	SSI	
1N689	CEN	275 - 12
HTN	IDC	
MDC	SPE	
	SSI	
1N690	CEN	251 -198
CRI	HTN	
IDC	MDC	
MSC	SCE	
SLD	SPE	
SSI	SST	
1N691	ASI	252 -179
CEN	CRI	
HTN	IDC	
MDC	MSC	
SCE	SLD	
SPE	SSI	
SST	WAB	
1N693	CEN	253 -151
CRI	HTN	
IDC	MDC	
SCE	SPE	
	SSI	
1N695	ASI	242 -171
CEN	CRI	
HTN	♦IDC	
♦ITTG	MDC	
SCE	SLD	
SPE	SST	
STI	WAB	
1N695A	CEN	248 - 94
HTN	♦IDC	
♦ITTG	MDC	
MISI	SLD	
SPE	SST	
	STI	
1N696	CRI	245 - 98
HTN	IDC	
MDC	SCE	
SLD	SPE	
SSI	SST	
1N697	ASI	250 -130
CRI	HTN	
MDC	SCE	
SLD	SPE	
SSI	SST	
	WAB	
1N698	CRI	242 -165
♦IDC	SPE	
1N699	CRI	243 - 41
♦IDC	MDC	
SLD	SPE	
SST	STI	
1N701	IDC	187 - 33
MSC	SPE	
1N702	CEN	164 -115
CODI	CRI	
ETC	GDC	
HTN	IDC	
KSI	MDC	
MOTA	MSC	
NJS	SCE	
SIEG	SPE	
SSI	TIC	
	TRWS	
1N702A	CEN	164 -114
CODI	ETC	
HTN	IDC	
KSI	MDC	
MOTA	MSC	
NJS	SCE	
SPE	TRWS	
UPI	WAB	

TYPE No.	MFRS	Pg&Line
1N703	♦APD	166 -130
CEN	CODI	
CRI	ETC	
GDC	HTN	
IDC	KSI	
MDC	MOTA	
MSC	NJS	
SCE	SIEG	
	SPE	
1N703A	♦APD	166 -128
CEN	CODI	
ETC	HTN	
IDC	KSI	
MDC	MOTA	
MSC	NJS	
SCE	SPE	
1N704	♦APD	168 -100
CEN	CODI	
CRI	ETC	
GDC	HTN	
IDC	KSI	
MDC	MOTA	
MSC	NJS	
SCE	SIEG	
SPE	SSY	
1N704A	♦APD	168 - 99
CEN	CODI	
ETC	HTN	
IDC	KSI	
MDC	MOTA	
MSC	NJS	
SCE	SPE	
	UPI	
1N705	♦APD	170 -164
CEN	CODI	
CRI	ETC	
GDC	HTN	
IDC	KSI	
MDC	MOTA	
MSC	NJS	
SCE	SIEG	
	SPE	
1N705A	♦APD	170 -163
CEN	CODI	
ETC	HTN	
IDC	KSI	
MDC	MOTA	
MSC	NJS	
SCE	SIEG	
SPE	WAB	
1N706	♦APD	173 -156
CEN	CODI	
CRI	ETC	
GDC	HTN	
IDC	KSI	
MDC	MOTA	
MSC	NJS	
SCE	SIEG	
SPE	WAB	
1N706A	♦APD	173 -154
CEN	CODI	
ETC	HTN	
IDC	KSI	
MDC	MOTA	
MSC	NJS	
SCE	SPE	
UPI	WAB	
1N707	♦APD	179 - 45
CEN	CODI	
CRI	ETC	
GDC	HTN	
IDC	KSI	
MDC	MOTA	
MSC	NJS	
SCE	SIEG	
SPE	WAB	
1N707A	♦APD	179 - 42
CEN	CODI	
ETC	HITJ	
HTN	IDC	
KSI	MDC	
MOTA	MSC	
NJS	SCE	
	SPE	
1N708	♦APD	172 -123
CEN	CODI	
CRI	ETC	
GDC	HTN	
IDC	KSI	
MDC	MOTA	
MSC	NJS	
SAR	SCE	
SIEG	SPE	
UPI	WAB	
1N708A	♦APD	172 -112
CEN	CODI	
ETC	HTN	
IDC	KSI	
MDC	MOTA	
MSC	NJS	
SCE	SPE	
	WAB	
1N708B	KSI	172 -125
	SPE	
1N709	♦APD	174 -125
CEN	CODI	
CRI	ETC	
GDC	HTN	
IDC	KSI	
MDC	MOTA	
MSC	NJS	
SCE	SIEG	
SPE	WAB	

TYPE No.	MFRS	Pg&Line
1N709A	♦APD	174 -100
CEN	CODI	
ETC	HTN	
IDC	KSI	
MDC	MOTA	
MSC	NJS	
SCE	SPE	
	WAB	
1N709B	IDC	174 -127
KSI	SPE	
1N710	♦APD	177 -163
CEN	CODI	
CRI	ETC	
GDC	HTN	
IDC	KSI	
MDC	MOTA	
MSC	NJS	
SCE	SIEG	
	SPE	
1N710A	♦APD	177 -152
CEN	CODI	
ETC	HTN	
IDC	KSI	
MDC	MOTA	
MSC	NJS	
SCE	SPE	
SSY	WAB	
1N710B	♦APD	177 -166
IDC	KSI	
	SPE	
1N711	♦APD	179 -155
CEN	CODI	
CRI	ETC	
GDC	HTN	
IDC	KSI	
MDC	MOTA	
MSC	NJS	
SCE	SIEG	
	SPE	
1N711A	♦APD	179 -144
CEN	CODI	
ETC	HTN	
IDC	KSI	
MDC	MOTA	
MSC	NJS	
SCE	SPE	
	WAB	
1N711B	♦APD	179 -157
IDC	KSI	
	SPE	
1N712	AMR	181 -137
♦APD	CEN	
CODI	CRI	
ETC	GDC	
HTN	IDC	
KSI	MDC	
MOTA	MSC	
NJS	SCE	
SIEG	SPE	
1N712A	AMR	181 -127
♦APD	CEN	
CODI	ETC	
HTN	IDC	
KSI	MDC	
MOTA	MSC	
NJS	SCE	
SPE	WAB	
1N712B	♦APD	181 -140
CRI	IDC	
KSI	SPE	
1N713	♦APD	184 -185
CEN	CODI	
CRI	ESP	
ETC	GDC	
HTN	IDC	
KSI	MDC	
MOTA	MSC	
NJS	SCE	
SIEG	SPE	
1N713A	♦APD	184 -139
CEN	CODI	
ESP	ETC	
HTN	IDC	
KSI	MDC	
MOTA	MSC	
NJS	SCE	
SPE	WAB	
1N713B	♦APD	184 -186
CRI	IDC	
KSI	SPE	
1N714	♦APD	187 - 5
CEN	CODI	
CRI	ESP	
ETC	GDC	
HTN	IDC	
KSI	MDC	
MOTA	♦MSC	
NJS	SCE	
SIEG	SPE	
UPI	WAB	
1N714A	♦APD	186 -202
CEN	CODI	
ESP	ETC	
HTN	IDC	
KSI	MDC	
MOTA	MSC	
NJS	SCE	
SPE	WAB	
1N714B	APD	187 - 8
CRI	IDC	
KSI	SPE	
1N715	♦APD	188 -174
CEN	CODI	
cont.next col.		

TYPE No.	MFRS	Pg&Line
1N715		
(cont.)	CRI	
ESP	ETC	
GDC	HTN	
IDC	KSI	
MDC	MOTA	
MSC	NJS	
SCE	SIEG	
	SPE	
1N715A	♦APD	188 -163
CEN	CODI	
ESP	ETC	
HTN	IDC	
KSI	MDC	
MOTA	MSC	
NJS	SCE	
SPE	WAB	
1N715B	♦APD	188 -175
CRI	HTN	
IDC	KSI	
	SPE	
1N716	♦APD	190 -129
CEN	CODI	
CRI	ESP	
ETC	GDC	
HTN	IDC	
KSI	MDC	
MOTA	MSC	
NJS	SCE	
SIEG	SPE	
1N716A	♦APD	190 -113
CEN	CODI	
ESP	ETC	
HTN	IDC	
KSI	MDC	
MOTA	MSC	
NJS	SCE	
SPE	WAB	
1N716B	♦APD	190 -131
CRI	IDC	
KSI	SPE	
1N717	♦APD	192 -111
CEN	CODI	
CRI	ESP	
ETC	GDC	
HTN	IDC	
KSI	MDC	
MOTA	MSC	
NJS	SCE	
SPE	WAB	
1N717A	♦APD	192 -101
CEN	CODI	
ESP	ETC	
HTN	IDC	
KSI	MDC	
MOTA	MSC	
NJS	SCE	
SPE	WAB	
1N717B	♦APD	192 -112
CRI	IDC	
KSI	SPE	
1N718	♦APD	194 -130
CEN	CODI	
CRI	ESP	
ETC	GDC	
HTN	IDC	
KSI	MDC	
MOTA	MSC	
NJS	SCE	
SIEG	SPE	
	WAB	
1N718A	♦APD	194 -121
CEN	CODI	
ESP	ETC	
HTN	IDC	
KSI	MDC	
MOTA	MSC	
NJS	SCE	
SPE	WAB	
1N718B	♦APD	194 -132
CRI	IDC	
KSI	SPE	
1N719	♦APD	196 - 40
CEN	CODI	
CRI	ESP	
ETC	GDC	
HTN	IDC	
KSI	MDC	
MOTA	MSC	
NJS	SCE	
SIEG	SPE	
1N719A	♦APD	196 - 31
CEN	CODI	
ESP	ETC	
HTN	IDC	
KSI	MDC	
MOTA	MSC	
NJS	SCE	
SPE	WAB	
1N719B	♦APD	196 - 41
CRI	IDC	
KSI	SPE	
1N720	♦APD	198 - 40
CEN	CODI	
CRI	ESP	
ETC	GDC	
HTN	IDC	
KSI	MDC	
MOTA	MSC	
NJS	SCE	
SIEG	SPE	
	UPI	
1N720A	♦APD	198 - 30
cont.next page		

D.A.T.A.

Δ-Registered with JEDEC by this manufacturer

♦-Mfr's data sheet available in microfilm service

1. TYPE No. CROSS INDEX

IN TYPE NUMBER SEQUENCE

TYPE No.	MFRS	Pg&Line
1N720A		
(cont.)	CEN	
CODI	ESP	
ETC	HTN	
IDC	KSI	
MDC	MOTA	
MSC	NJS	
SCE	SPE	
	WAB	
1N720B	♦APD	198 - 42
CRI	IDC	
KSI	SPE	
1N721	♦APD	200 - 44
CEN	CODI	
CRI	ESP	
ETC	GDC	
HTN	IDC	
KSI	MDC	
MOTA	MSC	
NJS	SCE	
SIEG	SPE	
1N721A	♦APD	200 - 36
CEN	CODI	
ESP	ETC	
HTN	IDC	
KSI	MDC	
MOTA	MSC	
NJS	SCE	
SPE	WAB	
1N721B	♦APD	200 - 45
CRI	KSI	
	SPE	
1N722	♦APD	201 -143
CEN	CRI	
ESP	ETC	
GDC	HTN	
IDC	KSI	
MDC	MOTA	
MSC	NJS	
SCE	SIEG	
SPE	SSY	
1N722A	♦APD	201 -135
CEN	ESP	
ETC	HTN	
IDC	KSI	
MDC	MOTA	
MSC	NJS	
SCE	SPE	
	WAB	
1N722B	♦APD	201 -145
CRI	IDC	
KSI	SPE	
	TIC	
1N723	♦APD	203 - 52
CEN	CRI	
ESP	ETC	
GDC	HTN	
IDC	KSI	
MDC	MOTA	
MSC	NJS	
SCE	SIEG	
	SPE	
1N723A	♦APD	203 - 45
CEN	ESP	
ETC	HTN	
IDC	KSI	
MDC	MOTA	
MSC	NJS	
SCE	SPE	
	WAB	
1N723B	♦APD	203 - 53
CRI	IDC	
KSI	SPE	
1N724	♦APD	204 -191
CEN	CRI	
ESP	ETC	
HTN	IDC	
KSI	MDC	
MOTA	MSC	
NJS	SCE	
SIEG	SPE	
1N724A	♦APD	204 -185
CEN	ESP	
ETC	HTN	
IDC	KSI	
MDC	MOTA	
MSC	NJS	
SCE	SPE	
	WAB	
1N724B	♦APD	204 -192
CRI	IDC	
KSI	SPE	
1N725	♦APD	206 -121
CEN	CRI	
ESP	HTN	
IDC	KSI	
MDC	MOTA	
MSC	NJS	
SCE	SIEG	
	SPE	
1N725A	♦APD	206 -117
CEN	ESP	
HTN	IDC	
KSI	MDC	
MOTA	MSC	
NJS	SCE	
SPE	WAB	
1N725B	♦APD	206 -122
CRI	IDC	
KSI	SPE	
1N726	♦APD	208 - 7
CEN	CRI	
ESP	HTN	
cont.next col.		

TYPE No.	MFRS	Pg&Line
1N726		
(cont.)	IDC	
KSI	MDC	
MOTA	MSC	
NJS	SCE	
SIEG	SPE	
1N726A	♦APD	208 - 2
CEN	ESP	
HTN	IDC	
KSI	MDC	
MOTA	MSC	
NJS	SCE	
SPE	WAB	
1N726B	♦APD	208 - 8
CRI	IDC	
KSI	SPE	
1N727	♦APD	209 - 96
CEN	CRI	
ESP	HTN	
IDC	MDC	
MOTA	MSC	
NJS	SCE	
	SPE	
1N727A	♦APD	209 - 91
CEN	ESP	
HTN	IDC	
MDC	MOTA	
MSC	NJS	
SCE	SPE	
1N727B	CRI	209 - 97
IDC	SPE	
1N728	♦APD	210 -135
CEN	CRI	
ESP	HTN	
IDC	MDC	
MOTA	MSC	
NJS	SCE	
SIEG	SPE	
1N728A	♦APD	210 -130
CEN	ESP	
HTN	IDC	
MDC	MOTA	
MSC	NJS	
SCE	SPE	
	WAB	
1N728B	CRI	210 - 90
IDC	SPE	
1N729	♦APD	211 -156
CEN	CRI	
ESP	HTN	
IDC	MDC	
MOTA	MSC	
NJS	SCE	
SIEG	SPE	
1N729A	♦APD	211 -151
CEN	ESP	
HTN	IDC	
MDC	MOTA	
MSC	NJS	
SCE	SPE	
	UPI	
1N729B	CRI	211 -157
IDC	SPE	
1N730	♦APD	212 -167
CEN	CRI	
ESP	HTN	
IDC	MDC	
MOTA	MSC	
NJS	SCE	
SIEG	SPE	
1N730A	♦APD	212 -163
CEN	ESP	
HTN	IDC	
MDC	MOTA	
MSC	NJS	
SCE	SPE	
1N730B	CRI	212 -168
IDC	SPE	
1N731	♦APD	213 -182
CEN	CRI	
ESP	HTN	
IDC	MDC	
MOTA	MSC	
NJS	SCE	
SIEG	SPE	
1N731A	CEN	213 -179
ESP	HTN	
IDC	MDC	
MOTA	MSC	
NJS	SCE	
	SPE	
1N731B	CRI	213 -183
IDC	SPE	
1N732	♦APD	214 -166
CEN	CRI	
ESP	HTN	
IDC	MDC	
MOTA	MSC	
NJS	SCE	
SIEG	SPE	
1N732A	CEN	214 -162
ESP	HTN	
IDC	MDC	
MSC	NJS	
SCE	SPE	
1N732B	CRI	214 -167
IDC	SPE	
1N733	♦APD	215 -177
CEN	CRI	
ESP	IDC	
MDC	MSC	
NJS	SCE	
SIEG	SPE	

TYPE No.	MFRS	Pg&Line
1N733A	CEN	215 -171
ESP	IDC	
MDC	MSC	
NJS	SCE	
SPE	WAB	
1N733B	CRI	215 -178
IDC	SPE	
	TIC	
1N734	♦APD	216 -149
CEN	CRI	
ESP	HTN	
IDC	MDC	
MSC	NJS	
SCE	SIEG	
	SPE	
1N734A	CEN	216 -146
ESP	HTN	
IDC	MDC	
MSC	NJS	
SCE	SPE	
1N734B	CRI	216 -150
IDC	SPE	
1N735	♦APD	217 -140
CEN	CRI	
ESP	HTN	
IDC	MDC	
MSC	NJS	
SCE	SIEG	
SPE	UPI	
1N735A	CEN	217 -137
ESP	HTN	
IDC	MDC	
MSC	NJS	
SCE	SPE	
	WAB	
1N735B	CRI	217 -141
IDC	SPE	
1N736	♦APD	218 -126
CEN	CRI	
ESP	HTN	
IDC	MDC	
MSC	NJS	
SCE	SIEG	
	SPE	
1N736A	CEN	218 -123
ESP	HTN	
IDC	MDC	
MSC	NJS	
SCE	SPE	
1N736B	CRI	218 -127
IDC	SPE	
1N737	CEN	219 -113
CRI	ESP	
HTN	IDC	
MDC	MSC	
NJS	SCE	
SIEG	SPE	
1N737A	CEN	219 -110
ESP	HTN	
IDC	MDC	
MSC	NJS	
SCE	SPE	
1N737B	CRI	219 -114
IDC	SPE	
1N738	CEN	220 - 69
CRI	ESP	
HTN	IDC	
MSC	NJS	
SCE	SIEG	
	SPE	
1N738A	CEN	220 - 66
ESP	HTN	
IDC	MSC	
NJS	SCE	
SPE	WAB	
1N738B	CRI	220 - 70
IDC	SPE	
1N739	CEN	221 - 39
CRI	ESP	
HTN	IDC	
MSC	SIEG	
	SPE	
1N739A	CEN	221 - 38
ESP	HTN	
IDC	MSC	
	SPE	
1N739B	CRI	221 - 40
IDC	SPE	
1N740	CEN	221 -182
CRI	ESP	
HTN	IDC	
MSC	SIEG	
	SPE	
1N740A	CEN	221 -181
ESP	HTN	
IDC	MSC	
	SPE	
1N740B	CRI	221 -183
IDC	SPE	
1N741	CEN	222 -135
CRI	ESP	
HTN	IDC	
MOTA	MSC	
SIEG	SPE	
1N741A	CEN	222 -134
ESP	HTN	
IDC	MOTA	
MSC	SPE	
1N741B	CRI	222 -136
IDC	SPE	
1N742	CEN	223 -160
CRI	ESP	
HTN	IDC	
cont.next col.		

TYPE No.	MFRS	Pg&Line
1N742		
(cont.)	MOTA	
MSC	SIEG	
	SPE	
1N742A	CEN	223 -159
ESP	HTN	
IDC	MOTA	
MSC	SPE	
1N742B	CRI	223 -161
IDC	SPE	
1N743	CEN	224 -113
CRI	ESP	
HTN	IDC	
MOTA	MSC	
SIEG	SPE	
1N743A	CEN	224 -112
ESP	HTN	
IDC	MOTA	
MSC	SPE	
1N743B	CRI	224 -114
IDC	SPE	
1N744	CEN	225 -117
CRI	ESP	
HTN	IDC	
MOTA	MSC	
SIEG	SPE	
1N744A	CEN	225 -116
ESP	HTN	
IDC	MOTA	
MSC	SPE	
1N744B	CRI	225 -118
IDC	SPE	
1N745	CEN	226 -122
CRI	ESP	
HTN	IDC	
MOTA	MSC	
SIEG	SPE	
	UPI	
1N745A	CEN	226 -121
ESP	HTN	
IDC	MOTA	
MSC	SPE	
	WAB	
1N745B	CRI	226 -123
IDC	SPE	
1N746	♦APD	166 - 17
CDIL	CEI	
CEN	CODI	
ELT	ETC	
GDC	HTN	
IDC	♦ITTG	
KSI	MDC	
♦MOTA	♦MSC	
NASG	NJS	
RHM	SCE	
♦SIEG	♦SLCB	
SLD	SPE	
SPR	SST	
TIC	TRWS	
UPI	WAB	
1N746A	♦APD	165 -203
CDIL	CEI	
CEN	CODI	
ETC	HITJ	
HTN	IDC	
♦INC	ITTG	
KSI	MDC	
♦MOTA	MSC	
NASG	NECE	
NJS	RHM	
SCE	♦SIEG	
SLCB	SPE	
THEF	TRWS	
UPI	WAB	
1N747	♦APD	166 -194
CDIL	CEI	
CEN	CODI	
CRI	ELT	
ETC	GDC	
HTN	IDC	
♦ITTG	KSI	
MDC	♦MOTA	
♦MSC	NASG	
NJS	RHM	
SCE	♦SIEG	
♦SLCB	SLD	
SPE	SPR	
SST	TRWS	
	UPI	
1N747A	♦APD	166 -174
CDIL	CEI	
CEN	CODI	
ETC	HITJ	
HTN	IDC	
♦INC	ITTG	
KSI	MDC	
♦MOTA	MSC	
NASG	NECE	
NJS	RHM	
SCE	♦SIEG	
♦SLCB	SPE	
THEF	TRWS	
UPI	WAB	
1N748	♦APD	167 -159
CDIL	CEI	
CEN	CODI	
CRI	ELT	
ETC	GDC	
HTN	IDC	
♦ITTG	KSI	
MDC	♦MOTA	
♦MSC	NASG	
NJS	RHM	
cont.next col.		

TYPE No.	MFRS	Pg&Line
1N748		
(cont.)	SCE	
♦SIEG	♦SLCB	
SLD	SPE	
SPR	SST	
TRWS	UPI	
	WAB	
1N748A	♦APD	167 -140
CDIL	CEI	
CEN	CODI	
ETC	HITJ	
HTN	IDC	
♦INC	ITTG	
KSI	MDC	
♦MOTA	MSC	
♦MULB	NASG	
NECE	NJS	
♦PHIN	RHM	
♦RTCF	SCE	
♦SIEG	♦SLCB	
SPE	THEF	
TRWS	UPI	
♦VALG	WAB	
1N749	♦APD	168 -177
CDIL	CEI	
CEN	CODI	
ELT	ETC	
GDC	HTN	
IDC	♦ITTG	
KSI	MDC	
♦MOTA	♦MSC	
NASG	NJS	
RHM	SCE	
♦SIEG	♦SLCB	
SLD	SPE	
SPR	SST	
TRWS	UPI	
	WAB	
1N749A	♦APD	168 -155
CDIL	CEI	
CEN	CODI	
ETC	HITJ	
HTN	IDC	
♦INC	ITTG	
KSI	MDC	
♦MOTA	MSC	
♦MULB	NASG	
NECE	NJS	
♦PHIN	RHM	
♦RTCF	SCE	
♦SIEG	♦SLCB	
SPE	THEF	
TRWS	UPI	
♦VALG	WAB	
1N750	♦APD	170 - 14
CDIL	CEI	
CEN	CODI	
CRI	ELT	
ETC	GDC	
HTN	IDC	
♦ITTG	KSI	
MDC	♦MOTA	
♦MSC	NASG	
NJS	RHM	
SCE	♦SIEG	
♦SLCB	SLD	
SPE	SPR	
SST	TRWS	
	UPI	
1N750A	♦APD	169 -193
CDIL	CEI	
CEN	CODI	
ETC	HITJ	
HTN	IDC	
♦INC	ITTG	
KSI	MDC	
♦MOTA	MSC	
♦MULB	NASG	
NECE	NJS	
♦PHIN	RHM	
♦RTCF	SCE	
♦SIEG	♦SLCB	
SPE	SSY	
THEF	UPI	
♦VALG	WAB	
1N751	♦APD	171 - 97
CDIL	CEI	
CEN	CODI	
CRI	ELT	
ETC	FGRS	
FSC	GDC	
HTN	IDC	
♦ITTG	KSI	
MDC	♦MOTA	
♦MSC	NASG	
NJS	RHM	
SCE	♦SIEG	
♦SLCB	SLD	
SPE	SPR	
SST	TRWS	
UPI	WAB	
1N751A	♦APD	171 - 69
CDIL	CEI	
CEN	CODI	
ETC	FGRS	
FSC	HITJ	
HTN	IDC	
♦INC	ITTG	
KSI	MDC	
♦MOTA	MSC	
♦MULB	NASG	
NECE	NJS	
♦PHIN	RHM	
cont.next page		

Δ-Registered with JEDEC by this manufacturer

♦-Mfr's data sheet available in microfilm service

1. TYPE No. CROSS INDEX

IN TYPE NUMBER SEQUENCE

TYPE No.	MFRS	Pg&Line
1N751A		
(cont.)	♦RTCF	
	SCE	
	♦SIEG	
	♦SLCB	
	SPE	
	THEF	
	TRWS	
	UPI	
	♦VALG	
	WAB	
1N752	♦APD	172 -187
	CDIL	
	CEI	
	CEN	
	CODI	
	CRI	
	ELT	
	ETC	
	FGRS	
	FSC	
	GDC	
	HTN	
	IDC	
	♦ITTG	
	KSI	
	MDC	
	♦MOTA	
	♦MSC	
	NASG	
	NJS	
	RHM	
	SCE	
	♦SIEG	
	♦SLCB	
	SLD	
	SPE	
	SPR	
	SST	
	TRWS	
	UPI	
	WAB	
1N752A	♦APD	172 -157
	CDIL	
	CEI	
	CEN	
	CODI	
	ETC	
	FGRS	
	♦FSC	
	HITJ	
	HTN	
	IDC	
	♦INC	
	ITTG	
	KSI	
	MDC	
	♦MOTA	
	MSC	
	♦MULB	
	NASG	
	NECE	
	NJS	
	♦PHIN	
	RHM	
	♦RTCF	
	SCE	
	♦SIEG	
	♦SLCB	
	SPE	
	THEF	
	TRWS	
	UPI	
	♦VALG	
	WAB	
1N753	♦APD	175 - 39
	CDIL	
	CEI	
	CEN	
	CODI	
	CRI	
	ELT	
	ETC	
	FGRS	
	FSC	
	GDC	
	HTN	
	IDC	
	♦ITTG	
	KSI	
	MDC	
	♦MOTA	
	♦MSC	
	NASG	
	NJS	
	RHM	
	SCE	
	♦SIEG	
	♦SLCB	
	SLD	
	SPE	
	SPR	
	SST	
	TRWS	
	UPI	
	WAB	
1N753A	♦APD	174 -170
	CDIL	
	CEI	
	CEN	
	CODI	
	ETC	
	FGRS	
	♦FSC	
	HITJ	
	HTN	
	IDC	
	♦INC	
	ITTG	
	KSI	
	MDC	
	♦MOTA	
	MSC	
	♦MULB	
	NASG	
	NECE	
	NJS	
	♦PHIN	
	RHM	
	♦RTCF	
	SCE	
	♦SIEG	
	♦SLCB	
	SLD	
	SPE	
	SPR	
	SST	
	TRWS	
	UPI	
	WAB	
1N754	♦APD	178 - 8
	CDIL	
	CEI	
	CEN	
	CODI	
	CRI	
	ELT	
	ETC	
	FGRS	
	FSC	
	GDC	
	HTN	
	IDC	
	♦ITTG	
	KSI	
	MDC	
	♦MOTA	
	♦MSC	
	NASG	
	NJS	
	RHM	
	SCE	
	♦SIEG	
	♦SLCB	
	SLD	
	SPE	
	SPR	
	SST	
	TRWS	
	UPI	
	WAB	
1N754A	♦APD	177 -194
	CDIL	
	CEI	
	CEN	
	CODI	
	ETC	
	FGRS	
	♦FSC	
	HITJ	
	HTN	
	IDC	
	♦INC	
	ITTG	
	KSI	
	MDC	
	♦MOTA	
	MSC	
	♦MULB	
	NASG	
	NECE	
	NJS	
	♦PHIN	
	RHM	
	♦RTCF	
	SCE	
	♦SIEG	
	♦SLCB	
	SLD	
	SPE	
	SPR	
	SST	
	TRWS	
	UPI	
	WAB	
1N755	♦APD	180 - 5
	CDIL	
	CEI	
	CEN	
	CODI	
	CRI	
	ELT	
	ETC	
	FGRS	
	♦FSC	
	GDC	
	HTN	
	IDC	
cont.next col.		

TYPE No.	MFRS	Pg&Line
1N755		
(cont.)	♦ITTG	
	KSI	
	♦MOTA	
	NASG	
	RHM	
	♦SIEG	
	SLD	
	SPR	
	UPI	
	WAB	
1N755A	♦APD	179 -180
	CDIL	
	CEI	
	CEN	
	CODI	
	ETC	
	FGRS	
	♦FSC	
	HITJ	
	HTN	
	IDC	
	♦INC	
	ITTG	
	KSI	
	MDC	
	♦MOTA	
	MSC	
	♦MULB	
	NASG	
	NECE	
	NJS	
	♦PHIN	
	RHM	
	♦RTCF	
	SCE	
	♦SIEG	
	♦SLCB	
	SPE	
	THEF	
	UPI	
	♦VALG	
	WAB	
1N756	♦APD	181 -188
	CDIL	
	CEI	
	CEN	
	CODI	
	CRI	
	ELT	
	ETC	
	FGRS	
	♦FSC	
	GDC	
	HTN	
	IDC	
	♦ITTG	
	KSI	
	MDC	
	♦MOTA	
	♦MSC	
	NASG	
	NJS	
	RHM	
	SCE	
	♦SIEG	
	♦SLCB	
	SLD	
	SPE	
	SPR	
	SST	
	TRWS	
	UPI	
	WAB	
1N756A	♦APD	181 -160
	CDIL	
	CEI	
	CEN	
	CODI	
	ETC	
	FGRS	
	♦FSC	
	HITJ	
	HTN	
	IDC	
	♦INC	
	ITTG	
	KSI	
	MDC	
	♦MOTA	
	MSC	
	♦MULB	
	NASG	
	NECE	
	NJS	
	♦PHIN	
	RHM	
	♦RTCF	
	SCE	
	♦SIEG	
	♦SLCB	
	SLD	
	SPE	
	SPR	
	SST	
	TRWS	
	UPI	
	WAB	
1N757	♦APD	185 - 20
	CDIL	
	CEI	
	CEN	
	CODI	
	CRI	
	ELT	
	ETC	
	FGRS	
	♦FSC	
	GDC	
	HTN	
	IDC	
	♦ITTG	
	KSI	
	MDC	
	♦MOTA	
	♦MSC	
	NASG	
	NJS	
	RHM	
	SCE	
	♦SIEG	
	♦SLCB	
	SLD	
	SPE	
	SPR	
	SST	
	SSY	
	TRWS	
	UPI	
1N757A	♦APD	184 -208
	CDIL	
	CEI	
	CEN	
	CODI	
	ETC	
	FGRS	
	♦FSC	
	HITJ	
	HTN	
	IDC	
	♦INC	
	ITTG	
	KSI	
	MDC	
	♦MOTA	
	MSC	
	♦MULB	
	NASG	
	NECE	
	NJS	
	♦PHIN	
	RHM	
	♦RTCF	
	SCE	
	♦SIEG	
	♦SLCB	
	SPE	
	THEF	
	TRWS	
	UPI	
	♦VALG	
	WAB	
1N758	♦APD	187 - 64
	CDIL	
	CEI	
	CEN	
	CODI	
	CRI	
	ELT	
	ETC	
	FGRS	
	♦FSC	
	GDC	
	HTN	
	IDC	
	♦ITTG	
	KSI	
	MDC	
	♦MOTA	
	♦MSC	
	NASG	
	NJS	
	PSLI	
	RHM	
	SCE	
	♦SIEG	
	♦SLCB	
	SLD	
	SPE	
	SPR	
	SST	
	TRWS	
	UPI	
1N758A	♦APD	187 - 34
	CDIL	
	CEI	
	CEN	
	CODI	
	ETC	
	FGRS	
cont.next col.		

TYPE No.	MFRS	Pg&Line
1N758A		
(cont.)	♦FSC	
	HITJ	
	HTN	
	IDC	
	♦INC	
	ITTG	
	KSI	
	MDC	
	♦MOTA	
	MSC	
	♦MULB	
	NECE	
	NJS	
	♦PHIN	
	PSLI	
	RHM	
	♦RTCF	
	SCE	
	♦SIEG	
	♦SLCB	
	SPE	
	THEF	
	TRWS	
	UPI	
	♦VALG	
	WAB	
1N759	♦APD	190 -176
	CDIL	
	CEI	
	CEN	
	CODI	
	CRI	
	ELT	
	ETC	
	FGRS	
	♦FSC	
	GDC	
	HTN	
	IDC	
	♦ITTG	
	KSI	
	MDC	
	♦MOTA	
	♦MSC	
	NJS	
	PSLI	
	RHM	
	SCE	
	♦SIEG	
	♦SLCB	
	SLD	
	SPE	
	SPR	
	SSY	
	SST	
	TRWS	
	UPI	
	WAB	
1N759A	♦APD	190 -150
	CDIL	
	CEI	
	CEN	
	CODI	
	ETC	
	FGRS	
	♦FSC	
	HITJ	
	HTN	
	IDC	
	♦INC	
	ITTG	
	KSI	
	MDC	
	♦MOTA	
	MSC	
	♦MULB	
	NECE	
	NJS	
	♦PHIN	
	PSLI	
	RHM	
	♦RTCF	
	SCE	
	♦SIEG	
	♦SLCB	
	SPE	
	THEF	
	TRWS	
	UPI	
	♦VALG	
	WAB	
1N760	CRI	249 - 4
	HTN	
	IDC	
	NJS	
	SIEG	
	UPI	
1N761	CEN	170 -179
	CODI	
	CRI	
	HTN	
	IDC	
	KSI	
	MDC	
	♦MOTA	
	MSC	
	NJS	
	SIEG	
	SPE	
	TRWS	
	UPI	
1N761A	CEN	170 -185
	CODI	
	HTN	
	IDC	
	KSI	
	MDC	
	♦MOTA	
	NJS	
	SPE	
	TRWS	
	UPI	
1N762	CEN	173 -157
	CODI	
	CRI	
	HTN	
	IDC	
	KSI	
	MDC	
	♦MOTA	
	MSC	
	NJS	
	SIEG	
	SPE	
	TRWS	
	UPI	
	WAB	
1N762A	CEN	173 -153
	CODI	
	HTN	
	IDC	
	KSI	
	MDC	
	♦MOTA	
	MSC	
	NJS	
	SPE	
	TRWS	
	UPI	
1N763	AMR	179 - 44
	CEN	
	CODI	
	CRI	
	HTN	
	IDC	
	KSI	
	MDC	
	♦MOTA	
	MSC	
	NJS	
	SCE	
	SIEG	
	SPE	
	TRWS	
	UPI	
1N763A	AMR	179 - 41
	CEN	
	CODI	
	HTN	
	IDC	
	KSI	
	MDC	
	♦MOTA	
	MSC	
	NJS	
	SCE	
	SIEG	
	SPE	
	TRWS	
	UPI	
1N764	AMR	183 -192
	♦APD	
	CEN	
	CODI	
	CRI	
	HTN	
	IDC	
	KSI	
	MDC	
	♦MOTA	
	MSC	
	NJS	
	SCE	
	SIEG	
	SPE	
	TRWS	
	UPI	
1N764A	AMR	183 -205
	CEN	
	CODI	
	HTN	
	IDC	
	KSI	
	MDC	
	♦MOTA	
	NJS	
cont.next col.		

TYPE No.	MFRS	Pg&Line
1N764A		
(cont.)	SCE	
	SPE	
	TRWS	
	UPI	
1N765	AMR	188 -118
	♦APD	
	CEN	
	CODI	
	CRI	
	HTN	
	IDC	
	KSI	
	MDC	
	♦MOTA	
	MSC	
	NJS	
	SCE	
	SIEG	
	SPE	
	TRWS	
	UPI	
	VALG	
	WAB	
1N765A	AMR	186 -203
	CEN	
	CODI	
	HTN	
	IDC	
	KSI	
	MDC	
	♦MOTA	
	NJS	
	SCE	
	SPE	
	TRWS	
	UPI	
	WAB	
1N766	AMR	192 - 17
	♦APD	
	CEN	
	CODI	
	CRI	
	HTN	
	IDC	
	KSI	
	MDC	
	♦MOTA	
	MSC	
	NJS	
	SCE	
	SIEG	
	SPE	
	SSI	
	TRWS	
	UPI	
1N766A	AMR	192 - 30
	CEN	
	CODI	
	HTN	
	IDC	
	KSI	
	MDC	
	♦MOTA	
	NJS	
	SCE	
	SPE	
	TRWS	
	UPI	
1N767	AMR	196 - 3
	♦APD	
	CEN	
	CODI	
	CRI	
	HTN	
	IDC	
	KSI	
	MDC	
	♦MOTA	
	MSC	
	NJS	
	SCE	
	SIEG	
	SPE	
	SSI	
	TRWS	
	UPI	
1N767A	AMR	196 - 13
	CEN	
	CODI	
	HTN	
	IDC	
	KSI	
	MDC	
	♦MOTA	
	MSC	
	NJS	
	SCE	
	SPE	
	SSI	
	TRWS	
	UPI	
1N768	AMR	199 -117
	♦APD	
	CEN	
	CODI	
	CRI	
	HTN	
	IDC	
	KSI	
	MDC	
	♦MOTA	
	MSC	
	NJS	
	SCE	
	SIEG	
	SPE	
	TRWS	
	UPI	
1N768A	AMR	199 -113
	CEN	
	CODI	
	HTN	
	IDC	
	KSI	
	MDC	
	♦MOTA	
	MSC	
	NJS	
	SCE	
	SPE	
	TRWS	
	UPI	
1N769	AMR	203 - 19
	♦APD	
	CEN	
	CRI	
	HTN	
	IDC	
	KSI	
	MDC	
	♦MOTA	
	MSC	
	NJS	
	SCE	
	SIEG	
	SPE	
	UPI	
1N769A	AMR	203 - 18
	CEN	
	HTN	
	IDC	
	KSI	
	MDC	
	♦MOTA	
	MSC	
	NJS	
	♦SCE	
	SPE	
	UPI	
1N770	AMR	242 -173
	CEN	
	CRI	
	HTN	
	♦IDC	
	MDC	
	SCE	
	SLD	
	SPE	
	SST	
	STI	
1N771	AMR	233 -161
	CEN	
	CRI	
	HTN	
	IDC	
	MDC	
	SLD	
	SPE	
	SST	
1N771A	AMR	233 -218
	CEI	
	CEN	
	HTN	
	IDC	
	MDC	
	SLD	
	SPE	
	SST	
	STI	
1N771B	AMR	234 - 41
	HTN	
	IDC	
	MDC	
	SLD	
	SPE	
	SST	
	STI	
1N772	AMR	233 -162
	CEN	
	CRI	
cont.next col.		

TYPE No.	MFRS	Pg&Line
1N772		
(cont.)	HTN	
	IDC	
	MDC	
	SLD	
	SPE	
	SST	
	SSY	
	UPI	
1N772A	AMR	233 -219
	CEI	
	CEN	
	HTN	
	IDC	
	MDC	
	SLD	
	SPE	
	SST	
	STI	
	UPI	
1N773	AMR	233 -163
	CEI	
	CEN	
	CRI	
	HTN	
	IDC	
	MDC	
	SLD	
	SPE	
	SST	
	UPI	
1N773A	AMR	233 -220
	CEI	
	CEN	
	HTN	
	IDC	
	MDC	
	SLD	
	SPE	
	SST	
	STI	
	UPI	
1N774	AMR	233 -164
	CEI	
	CEN	
	CRI	
	HTN	
	IDC	
	MDC	
	SLD	
	SPE	
	SST	
	UPI	
1N774A	AMR	234 - 1
	ASI	
	CEI	
	CEN	
	HTN	
	IDC	
	MDC	
	SLD	
	SPE	
	SST	
	STI	
	UPI	
1N775	AMR	233 -165
	CEI	
	CEN	
	CRI	
	HTN	
	IDC	
	MDC	
	SLD	
	SPE	
	SST	
	SSY	
	UPI	
1N776	AMR	233 - 74
	CEI	
	CEN	
	CRI	
	HTN	
	IDC	
	MDC	
	SLD	
	SPE	
	SST	
	SSY	
	UPI	
1N777	AMR	249 - 50
	ASI	
	CEN	
	CRI	
	HTN	
	♦IDC	
	MDC	
	SLD	
	SPE	
	SST	
	SSY	
	WAB	
1N778	AMR	243 - 22
	CEN	
	CRI	
	HTN	
	MSC	
	SCE	
	SLD	
	SPE	
	SST	
1N779	AMR	243 - 72
	CRI	
	HTN	
	♦MSC	
	SCE	
	SPE	
1N781	AMR	245 -120
	CEN	
	CRI	
	HTN	
	MDC	
	SLD	
	SPE	
	SST	
1N781A	AMR	245 -121
	CEN	
	HTN	
	MDC	
	SPE	
	STI	
1N788	AMR	249 - 5
	CEN	
	CRI	
	HTN	
	IDC	
	SPE	
	STI	
1N789	ΔTRWS	242 -182
	AMR	
	CEN	
	CRI	
	HTN	
	IDC	
	MSC	
	SCE	
	SLD	
	SPE	
	SST	
1N790	ΔTRWS	242 -177
	AMR	
	CEN	
	CRI	
	HTN	
	IDC	
	MSC	
	SCE	
	SLD	
	SPE	
	SST	
1N791	ΔTRWS	242 -183
	AMR	
	CEN	
	CRI	
	HTN	
	IDC	
	MSC	
	SCE	
	SLD	
	SPE	
	SST	
1N792	ΔTRWS	242 -184
	AMR	
	CEN	
	CRI	
	HTN	
	IDC	
	MSC	
	SCE	
	SLD	
	SPE	
	SST	
1N793	ΔTRWS	243 - 3
	AMR	
	CEN	
	CRI	
	HTN	
	MSC	
	SCE	
	SLD	
	SPE	
	SST	
1N794	ΔTRWS	242 -213
	AMR	
	CEN	
	CRI	
	HTN	
cont.next page		

Δ-Registered with JEDEC by this manufacturer

♦-Mfr's data sheet available in microfilm service

1. TYPE No. CROSS INDEX

IN TYPE NUMBER SEQUENCE

TYPE No.	MFRS	Pg&Line
1N794		
(cont.)	IDC	
	♦MSC	
	SCE	
	SLD	
	SST	
1N795	ΔTRWS	243 - 4
	AMR	
	CEN	
	CRI	
	HTN	
	♦MSC	
	SCE	
	SLD	
	SPE	
1N796	ΔTRWS	243 - 5
	AMR	
	CEN	
	CRI	
	HTN	
	♦MSC	
	SCE	
	SLD	
	SPE	
	SST	
1N797	ΔTRWS	243 - 56
	AMR	
	CEN	
	CRI	
	HTN	
	♦MSC	
	SCE	
	SLD	
	SPE	
	SST	
1N798	ΔTRWS	243 - 48
	AMR	
	CEN	
	HTN	
	♦MSC	
	SCE	
	SLD	
	SPE	
	SST	
1N799	ΔTRWS	243 - 57
	AMR	
	CEN	
	HTN	
	♦MSC	
	SCE	
	SLD	
	SPE	
	SST	
1N800	ΔTRWS	243 - 58
	AMR	
	CEN	
	CRI	
	HTN	
	♦MSC	
	SCE	
	SLD	
	SPE	
	SST	
1N801	ΔTRWS	243 - 67
	AMR	
	CEN	
	CRI	
	HTN	
	♦MSC	
	SCE	
	SPE	
1N802	ΔTRWS	243 - 68
	AMR	
	CEN	
	CRI	
	HTN	
	♦MSC	
	SCE	
	SPE	
1N803	ΔTRWS	243 - 83
	AMR	
	CEN	
	CRI	
	HTN	
	♦MSC	
	SCE	
	SPE	
1N804	ΔTRWS	243 - 84
	AMR	
	CEN	
	CRI	
	HTN	
	♦MSC	
	SCE	
	SPE	
1N805	AMR	231 - 58
	ASI	
	CEN	
	CRI	
	HTN	
	MDC	
	SCE	
	SLD	
	SPE	
	SST	
	STI	
	UPI	
	WAB	
1N806	AMR	243 - 23
	CEN	
	CRI	
	ETC	
	GDC	
	HTN	
	IDC	
	MDC	
	♦MSC	
	SCE	
	SLD	
	SPE	
	SST	
1N807	AMR	243 - 73
	CEN	
	CRI	
	GDC	
	HTN	
	IDC	
	MDC	
	♦MSC	
	SCE	
	SPE	
	UPI	
1N808	AMR	249 - 65
	ASI	
	CEN	
	CRI	
	♦DIT	
	HTN	
	IDC	
	♦MSC	
	SCE	
	SLD	
	SPE	
	SST	
	WAB	
1N809	AMR	249 -114
	CEN	
	CRI	
	HTN	
	IDC	
	SCE	
	SPE	
1N810	AMR	246 - 4
	CRI	
	HTN	
	IDC	
	SCE	
	SLD	
	SPE	
	SST	
1N811	AMR	242 -169
	CEN	
	CRI	
	♦DIT	
	GDC	
	HTN	
	IDC	
	MDC	
	MSC	
	SCE	
	SLD	
	SPE	
	SST	
	STI	
1N812	AMR	242 -178
	CEN	
	CRI	
	GDC	
	HTN	
	IDC	
	MDC	
	MSC	
	SCE	
	SLD	
	SPE	
	SST	
	STI	
1N813	AMR	242 -162
	CEN	
	CRI	
	GDC	
	HTN	
	IDC	
	MDC	
	SCE	
	SLD	
cont.next col.		

TYPE No.	MFRS	Pg&Line
1N813		
(cont.)	SPE	
	SST	
	STI	
1N814	AMR	242 -198
	CEN	
	CRI	
	GDC	
	HTN	
	IDC	
	MDC	
	MSC	
	SCE	
	SLD	
	SPE	
	SST	
	STI	
1N815	AMR	242 -163
	CEN	
	CRI	
	GDC	
	HTN	
	IDC	
	MDC	
	SCE	
	SLD	
	SPE	
	SST	
	STI	
1N816	AMR	163 - 19
	♦APD	
	CEN	
	CODI	
	CRI	
	EAS	
	FSC	
	GDC	
	HTN	
	IDC	
	MDC	
	MSC	
	SCE	
	SLD	
	SPE	
	SST	
	STI	
	TRWS	
	UPI	
	WAB	
1N817	AMR	249 -122
	CEN	
	SCE	
	SPE	
1N818	AMR	248 -108
	CEN	
	CRI	
	HTN	
	IDC	
	MSC	
	SCE	
	SLD	
	SPE	
	SST	
	STI	
1N821	AMR	174 -101
	♦APD	
	APX	
	CDI	
	CEN	
	CODI	
	CRI	
	DIT	
	♦GSE	
	HTN	
	IDC	
	♦MOTA	
	MSC	
	♦MULB	
	♦PHIN	
	♦RTCF	
	SCE	
	♦SIEG	
	♦SLCB	
	SLD	
	SPE	
	SSI	
	SST	
	THEF	
	UPI	
	♦VALG	
	WAB	
1N821A	Δ ♦MOTA	174 -171
	AMR	
	♦APD	
	CDI	
	CEN	
	CODI	
	CRI	
	DIT	
	♦GSE	
	HTN	
	IDC	
	♦MSC	
	♦MULB	
	♦PHIN	
	♦RTCF	
	SCE	
	♦SIEG	
	♦SLCB	
	SLD	
	SPE	
	SSI	
	SST	
	THEF	
	UPI	
	VALG	
	WAB	
1N822	AMR	228 - 86
	CDI	
	CODI	
	CRI	
	DIT	
	HTN	
	IDC	
	MSC	
	SLD	
	SSI	
	SST	
	WAB	
1N822A	AMR	228 - 87
	CODI	
	HTN	
	IDC	
	SSI	
1N823	AMR	174 -102
	♦APD	
	APX	
	CDI	
	CEN	
	CODI	
	CRI	
	DIT	
	♦GSE	
	HTN	
	IDC	
	MCY	
	♦MOTA	
	MSC	
	♦MULB	
	♦PHIN	
	♦RTCF	
	SCE	
	♦SIEG	
	♦SLCB	
	SLD	
	SPE	
	SSI	
	SST	
	THEF	
	UPI	
	♦VALG	
	WAB	
1N823A	Δ ♦MOTA	174 -172
	AMR	
	♦APD	
	CDI	
	CEN	
	CODI	
	CRI	
	DIT	
	♦GSE	
	HTN	
	IDC	
	♦MSC	
	♦MULB	
	♦PHIN	
	♦RTCF	
	SCE	
	♦SIEG	
	♦SLCB	
	SLD	
	SPE	
	SSI	
	SST	
	SSY	
	THEF	
	VALG	
	WAB	
1N824	AMR	228 - 88
	CDI	
	CRI	
	DIT	
	HTN	
	IDC	
	MSC	
	SLD	
	SPE	
	SSI	
	SST	
1N824A	AMR	228 - 89
	CODI	
	HTN	
	IDC	
	SSI	

TYPE No.	MFRS	Pg&Line
1N825	AMR	174 -103
	♦APD	
	APX	
	CDI	
	CEN	
	CODI	
	CRI	
	DIT	
	♦GSE	
	HTN	
	IDC	
	♦MOTA	
	MSC	
	♦MULB	
	♦PHIN	
	♦RTCF	
	SCE	
	♦SIEG	
	♦SLCB	
	SLD	
	SPE	
	SSI	
	SST	
	THEF	
	UPI	
	♦VALG	
	WAB	
1N825A	Δ ♦MOTA	174 -173
	AMR	
	♦APD	
	CDI	
	CEN	
	CODI	
	CRI	
	DIT	
	♦GSE	
	HTN	
	IDC	
	♦MSC	
	♦MULB	
	♦PHIN	
	♦RTCF	
	SCE	
	♦SIEG	
	♦SLCB	
	SLD	
	SPE	
	SSI	
	SST	
	THEF	
	VALG	
1N826	AMR	177 - 76
	CDI	
	CODI	
	CRI	
	DIT	
	GSE	
	HTN	
	IDC	
	♦MSC	
	SIEG	
	SPE	
	SSI	
1N826A	AMR	177 - 77
	CODI	
	HTN	
	IDC	
	SPE	
	SSI	
1N827	AMR	174 -104
	♦APD	
	APX	
	CDI	
	CEN	
	CODI	
	CRI	
	DIT	
	♦GSE	
	HTN	
	IDC	
	♦MOTA	
	MSC	
	♦MULB	
	♦PHIN	
	♦RTCF	
	SCE	
	♦SIEG	
	♦SLCB	
	SLD	
	SPE	
	SSI	
	SST	
	THEF	
	VALG	
	WAB	
1N827A	Δ ♦MOTA	174 -174
	AMR	
	♦APD	
	CDI	
	CEN	
	CODI	
	CRI	
	DIT	
	♦GSE	
	HTN	
	IDC	
	♦MSC	
	♦MULB	
	♦PHIN	
	♦RTCF	
	SCE	
	♦SIEG	
	♦SLCB	
	SLD	
	SPE	
	SSI	
	SST	
	THEF	
	VALG	
1N828	AMR	177 - 78
	CDI	
	CODI	
	CRI	
	DIT	
	GSE	
	HTN	
	IDC	
	♦MSC	
	♦SIEG	
	SPE	
	SSI	
1N828A	AMR	177 - 79
	CODI	
	HTN	
	IDC	
	SPE	
	SSI	
1N829	AMR	174 -105
	♦APD	
	CDI	
	CEN	
	CODI	
	CRI	
	DIT	
	♦GSE	
	HTN	
	IDC	
	♦MOTA	
	♦MSC	
	♦MULB	
	♦PHIN	
	♦RTCF	
	SCE	
	♦SIEG	
	♦SLCB	
	SLD	
	SPE	
	SSI	
	SST	
	THEF	
	UPI	
	♦VALG	
	WAB	
1N829A	AMR	174 -106
	♦APD	
	♦APX	
	CDI	
	CEN	
	CODI	
	DIT	
	♦GSE	
	HTN	
	IDC	
	♦MOTA	
	MSC	
	♦MULB	
	♦PHIN	
	♦RTCF	
	SCE	
	♦SIEG	
	♦SLCB	
	SPE	
	SSI	
	THEF	
	VALG	
	WAB	
1N830	Δ ♦ALP	439 - 15
	ASI	
	SPE	
	WAB	
1N830A	ALP	438 - 63
	SPE	
	WAB	
1N835	AMR	242 -185
	CEN	
	CRI	
	HTN	
	♦IDC	
	SPE	
	STI	
1N837	AMR	249 - 69
	CEN	
	CRI	
cont.next col.		

TYPE No.	MFRS	Pg&Line
1N837		
(cont.)	HTN	
	♦MSC	
	SLD	
	SPE	
	SST	
1N837A	AMR	249 - 66
	CEN	
	HTN	
	♦MSC	
	SCE	
	SLD	
	SPE	
	SST	
1N838	AMR	249 - 93
	CEN	
	CRI	
	HTN	
	♦MSC	
	SCE	
	SPE	
1N839	AMR	249 -117
	CEN	
	CRI	
	HTN	
	SCE	
	SPE	
1N840	AMR	249 - 25
	CEN	
	HTN	
	IDC	
	♦MSC	
	SCE	
	SLD	
	SPE	
	SST	
1N841	AMR	249 - 90
	CEN	
	CRI	
	HTN	
	♦MSC	
	SCE	
	SPE	
	SSY	
1N842	AMR	249 -115
	CEN	
	CRI	
	FSC	
	HTN	
	SCE	
	SPE	
1N843	AMR	249 -131
	CEN	
	CRI	
	HTN	
	SCE	
	UPI	
	SPE	
1N844	AMR	249 - 70
	CEN	
	CRI	
	HTN	
	SCE	
	SLD	
	SPE	
	SST	
1N845	AMR	249 -118
	CEN	
	CRI	
	HTN	
	SCE	
	SPE	
1N846	AMR	275 - 31
	CEN	
	HTN	
	IDC	
	MDC	
	SPE	
	UPI	
1N847	AMR	275 - 48
	CEN	
	CRI	
	HTN	
	IDC	
	MDC	
	SPE	
	UPI	
1N848	AMR	275 - 68
	CEN	
	CRI	
	HTN	
	MDC	
	SPE	
	SSI	
	UPI	
1N849	AMR	275 - 86
	CEN	
	CRI	
	HTN	
	MDC	
	SPE	
	SSI	
	UPI	
1N850	AMR	275 -102
	CEN	
	CRI	
	HTN	
	MDC	
	SPE	
	SSI	
1N851	AMR	275 -116
	CEN	
	CRI	
	HTN	
	IDC	
	MDC	
	SPE	
	SSI	
1N852	AMR	275 -128
	CEN	
	CRI	
	HTN	
	MDC	
	SPE	
1N853	AMR	275 -139
	CEN	
	CRI	
	HTN	
	MDC	
	SPE	
1N854	AMR	275 -148
	CEN	
	CRI	
	HTN	
	IDC	
	MDC	
	SPE	
1N855	AMR	275 -156
	CEN	
	CRI	
	HTN	
	IDC	
	MDC	
	SPE	
1N856	AMR	401 - 43
	CEN	
	CRI	
	HTN	
	MDC	
	SPE	
1N857	AMR	274 -191
	CEN	
	CRI	
	GDC	
	HTN	
	IDC	
	MDC	
	SPE	
	UPI	
1N858	AMR	274 -196
	CEN	
	CRI	
	GDC	
	HTN	
	IDC	
	MDC	
	SPE	
	UPI	
1N859	AMR	274 -204
	CEN	
	CRI	
	GDC	
	HTN	
	IDC	
	MDC	
	SPE	
	UPI	
1N860	AMR	274 -209
	CEN	
	CRI	
	HTN	
	MDC	
	SPE	
	UPI	
1N861	AMR	274 -214
cont.next col.		

TYPE No.	MFRS	Pg&Line
1N861		
(cont.)	CEN	
	CRI	
	HTN	
	IDC	
	MDC	
	SPE	
	UPI	
1N862	AMR	275 - 1
	CEN	
	CRI	
	HTN	
	MDC	
	SPE	
1N863	AMR	275 - 7
	CEN	
	CRI	
	HTN	
	MDC	
	SPE	
1N864	AMR	275 - 13
	CEN	
	CRI	
	HTN	
	MDC	
	SPE	
1N865	AMR	275 - 14
	CEN	
	CRI	
	HTN	
	MDC	
	SPE	
1N866	AMR	275 - 21
	CEN	
	CRI	
	HTN	
	IDC	
	MDC	
	SPE	
1N867	AMR	401 - 35
	CEN	
	CRI	
	HTN	
	MDC	
	SPE	
1N868	AMR	274 -117
	CEN	
	CRI	
	HTN	
	IDC	
	MDC	
	SPE	
1N869	AMR	274 -126
	CEN	
	CRI	
	HTN	
	IDC	
	MDC	
	SPE	
	UPI	
1N870	AMR	274 -136
	CEN	
	CRI	
	HTN	
	IDC	
	MDC	
	SPE	
	UPI	
1N871	AMR	274 -149
	CEN	
	CRI	
	HTN	
	IDC	
	SPE	
	UPI	
1N872	AMR	274 -155
	CEN	
	CRI	
	HTN	
	MDC	
	SPE	
	UPI	
1N873	AMR	274 -163
	CEN	
	CRI	
	HTN	
	IDC	
	MDC	
	SPE	
1N874	AMR	274 -169
	CEN	
	CRI	
	HTN	
	MDC	
	SPE	
1N875	AMR	274 -176
	CEN	
	CRI	
	HTN	
	IDC	
	MDC	
	SPE	
1N876	AMR	274 -178
	CEN	
	CRI	
	HTN	
	MDC	
	SPE	
1N877	AMR	274 -183
	CEN	
	CRI	
	HTN	
	MDC	
	SPE	
1N878	AMR	401 - 26
	CEN	
	CRI	
	HTN	
	MDC	
	SPE	
1N879	AMR	274 - 75
	CEN	
	CRI	
	HTN	
	MDC	
	SPE	
	UPI	
1N880	AMR	274 - 80
	CEN	
	CRI	
	HTN	
	IDC	
	MDC	
	SPE	
	UPI	
1N881	AMR	274 - 86
	CEN	
	CRI	
	HTN	
	MDC	
	SCE	
	SPE	
1N882	AMR	274 - 88
	CEN	
	CRI	
	HTN	
	MDC	
	SPE	
	UPI	
1N883	AMR	274 - 90
	CEN	
	CRI	
	HTN	
	MDC	
	SPE	
1N884	AMR	274 - 92
	CEN	
	CRI	
	HTN	
	IDC	
	MDC	
	SPE	
1N885	AMR	274 - 94
	CEN	
	CRI	
	HTN	
	IDC	
	SPE	
1N886	AMR	274 - 96
	CEN	
	CRI	
	HTN	
	IDC	
	MDC	
	SPE	
1N887	AMR	274 - 97
	CEN	
	CRI	
	HTN	
	MDC	
	SPE	

Δ-Registered with JEDEC by this manufacturer

♦-Mfr's data sheet available in microfilm service

1. TYPE No. CROSS INDEX

IN TYPE NUMBER SEQUENCE

TYPE No.	MFRS	Pg&Line
1N888	AMR	274 - 98
	CEN	
	HTN	
	MDC	
	SPE	
1N889	AMR	401 - 15
	ASI	
	CEN	
	CRI	
	HTN	
	MDC	
	SPE	
	WAB	
1N890	AMR	234 -102
	♦APD	
	CEN	
	CRI	
	HTN	
	SLD	
	SPE	
	SST	
1N891	AMR	238 -115
	CEN	
	CRI	
	HTN	
	IDC	
	MDC	
	♦MSC	
	SCE	
	SLD	
	SPE	
	SST	
1N892	AMR	238 -215
	CEN	
	CRI	
	HTN	
	IDC	
	♦MSC	
	SCE	
	SPE	
1N893	AMR	239 -103
	CEN	
	CRI	
	HTN	
	IDC	
	SCE	
	SPE	
1N897	AMR	242 -207
	CODI	
	CRI	
	HTN	
	♦MSC	
	SPE	
	UPI	
1N898	AMR	242 -204
	CODI	
	CRI	
	HTN	
	♦MSC	
	SPE	
	UPI	
1N899	AMR	243 - 24
	CODI	
	HTN	
	♦MSC	
	SPE	
1N900	AMR	243 - 25
	CODI	
	CRI	
	HTN	
	♦MSC	
	SPE	
1N901	AMR	243 - 26
	CODI	
	CRI	
	HTN	
	IDC	
	♦MSC	
	SPE	
1N902	AMR	243 - 76
	CODI	
	CRI	
	HTN	
	♦MSC	
	SPE	
1N903	AMR	244 -147
	CEN	
	CRI	
	ETC	
	HTN	
	IDC	
	MDC	
	♦MSC	
	SCE	
	SPE	
	UPI	
1N903A	AMR	245 - 70
	CEN	
	ETC	
	HTN	
	IDC	
	MDC	
	♦MSC	
	SCE	
	SPE	
	STI	
1N904	AMR	244 -209
	CEN	
	CRI	
	ETC	
	HTN	
	IDC	
	MDC	
	♦MSC	
	SCE	
	SPE	
1N904A	AMR	244 -210
	CEN	
	ETC	
	HTN	
	IDC	
	MDC	
	♦MSC	
	SCE	
	SPE	
	STI	
	TIC	
1N905	AMR	243 -109
	CEN	
	CRI	
	ETC	
	HTN	
	IDC	
	MDC	
	♦MSC	
	SCE	
	SPE	
1N905A	AMR	244 -148
	CEN	
	ETC	
	HTN	
	IDC	
	MDC	
	♦MSC	
	SCE	
	SPE	
	STI	
1N906	AMR	244 -149
	ASI	
	CEN	
	CRI	
	ETC	
	HTN	
	IDC	
	MDC	
	♦MSC	
	SCE	
	SPE	
	WAB	
1N906A	AMR	244 -150
	CEN	
	ETC	
	HTN	
	IDC	
	MDC	
	♦MSC	
	SCE	
	SPE	
	STI	
1N907	AMR	243 -110
	CEN	
	CRI	
	ETC	
	HTN	
	IDC	
	MDC	
	♦MSC	
	SCE	
	SPE	
1N907A	AMR	244 -211
	CEN	
	ETC	
	HTN	
	IDC	
	MDC	
	♦MSC	
	SCE	
	SPE	
	STI	
1N908	AMR	243 -111
	ASI	
	CEN	
	CRI	
	ETC	
	HTN	
	IDC	
	MDC	
	♦MSC	
	SCE	
	SPE	
	WAB	
1N908A	AMR	245 - 71
	CEN	
	ETC	
	HTN	
	IDC	
	MDC	
	♦MSC	
	SCE	
	SPE	
	STI	
1N909	AMR	234 -120
	CEI	
	CEN	
	CRI	
	HTN	
	IDC	
	SPE	
	UPI	
1N910	AMR	234 -121
	CEI	
	CEN	
	CRI	
	HTN	
	SPE	
	STI	
	UPI	
1N911	AMR	234 -122
	CEI	
	CEN	
	CRI	
	HTN	
	IDC	
	SLD	
	SPE	
	SST	
	UPI	
1N912	AMR	163 - 15
	CEN	
	CODI	
	CRI	
	HTN	
	IDC	
	MSC	
	SPE	
1N912A	AMR	163 - 14
	CEN	
	CODI	
	HTN	
	IDC	
	MSC	
	SPE	
	WAB	
1N913	AMR	163 - 17
	CEN	
	CODI	
	CRI	
	HTN	
	IDC	
	MSC	
	SPE	
	WAB	
1N913A	AMR	163 - 16
	CEN	
	CODI	
	HTN	
	IDC	
	MSC	
	SPE	
1N914	Δ♦UNI	246 - 95
	AMR	
	♦APD	
	♦APX	
	ASI	
	CEI	
	CEN	
	CRI	
	DIO	
	♦FSC	
	HITJ	
	HTN	
	IDC	
	♦ITTG	
	MDC	
	MISI	
	♦MSC	
	♦MULB	
	NJS	
	♦PHIN	
	RHM	
	♦RTCF	
	SCE	
	SELI	
	♦SLCB	
	SLD	
	SPE	
	SPR	
	SST	
	STI	
	TIC	
	UPI	
	VALG	
	WAB	
1N914A	ΔFSC	246 - 96
	AMR	
	ASI	
	CEN	
	HITJ	
	HTN	
	IDC	
	♦INC	
	MDC	
	♦MSC	
	♦MULB	
	NJS	
	♦PHIN	
	RHM	
	♦RTCF	
	SCE	
	♦SLCB	
	SLD	
	SPE	
	SPR	
	SST	
	STI	
	♦UNI	
	UPI	
	VALG	
	WAB	
1N914B	Δ♦UNI	246 - 97
	AMR	
	CEN	
	DIO	
	ETC	
	FSC	
	HITJ	
	HTN	
	IDC	
	MDC	
	♦MSC	
	NJS	
	RHM	
	SCE	
	♦SLCB	
	SLD	
	SPE	
	SPR	
	SST	
	STI	
	UPI	
1N915	Δ♦UNI	245 -209
	AMR	
	ASI	
	CEN	
	CODI	
	CRI	
	ETC	
	HITJ	
	HTN	
	IDC	
	SPE	
	WAB	
1N916	Δ♦UNI	246 - 98
	AMR	
	♦APX	
	ASI	
	CEN	
	CRI	
	♦FSC	
	HITJ	
	HTN	
	IDC	
	♦ITTG	
	MDC	
	♦MSC	
	♦MULB	
	♦PHIN	
	RHM	
	RTCF	
	SCE	
	♦SLCB	
	SLD	
	SPE	
	SST	
	STI	
	TIC	
	UPI	
	VALG	
	WAB	
1N916A	ΔFSC	246 - 99
	AMR	
	ASI	
cont.next col.		
1N916A		
(cont.)		
	HITJ	
	IDC	
	♦MSC	
	♦PHIN	
	♦RTCF	
	♦SLCB	
	SPE	
	STI	
	♦VALG	
1N916B	AMR	246 -100
	CEN	
	FSC	
	HTN	
	MDC	
	♦MULB	
	RHM	
	SCE	
	SLD	
	SPE	
	SST	
	♦UNI	
1N917	AMR	244 -207
	ASI	
	CODI	
	ETC	
	HTN	
	SPE	
1N919	AMR	243 - 66
	CEN	
	CRI	
	HTN	
	MDC	
	MSC	
	SPE	
	SSI	
1N920	AMR	251 -197
	ASI	
	CRI	
	HTN	
	IDC	
	MSC	
	SCE	
	SLD	
	SPE	
	SSI	
	SST	
	WAB	
1N921	AMR	252 -178
	CRI	
	HTN	
	IDC	
	MSC	
	SCE	
	SLD	
	SPE	
	SSI	
	SST	
1N922	AMR	253 - 89
	CRI	
	HTN	
	IDC	
	MSC	
	SCE	
	SLD	
	SPE	
	SSI	
	SST	
1N923	AMR	253 -150
	CRI	
	HTN	
	IDC	
	SCE	
	SPE	
	SSI	
1N924	AMR	249 - 42
	CEN	
	CRI	
	HTN	
	IDC	
	SLD	
	SPE	
	SST	
1N925	AMR	242 -192
	CEN	
	CRI	
	ETC	
	HTN	
	IDC	
	MDC	
	MSC	
	SCE	
	SLD	
	SPE	
	SST	
1N926	AMR	242 -193
	CEN	
	CRI	
	ETC	
	HTN	
	IDC	
	MDC	
	MSC	
	SCE	
	SLD	
	SPE	
	SST	
1N927	AMR	243 - 11
	CEN	
	CRI	
	ETC	
	HTN	
	IDC	
	MDC	
	MSC	
	SCE	
	SLD	
	SPE	
	SST	
1N928	AMR	243 - 46
	CEN	
	CRI	
	ETC	
	HTN	
	MDC	
	MSC	
	SCE	
	SLD	
	SPE	
	SST	
1N929	AMR	236 - 11
	CEI	
	CEN	
	CRI	
	♦DIT	
	ETC	
	HTN	
	IDC	
	SCE	
	SLD	
	SPE	
	SST	
	UPI	
1N930	AMR	236 - 12
	CEN	
	CRI	
	ETC	
	HTN	
	IDC	
	SCE	
	SLD	
	SPE	
	SST	
	UPI	
1N931	AMR	236 - 13
	CEI	
	CEN	
	CRI	
	ETC	
	HTN	
	IDC	
	SCE	
	SLD	
	SPE	
	SST	
1N932	AMR	236 - 14
	ASI	
	CEN	
	CRI	
	ETC	
	HTN	
	IDC	
	SPE	
	UPI	
1N933	AMR	243 - 34
	CEN	
	CRI	
	HTN	
	♦IDC	
	MISI	
	SCE	
	SPE	
	SSI	
	STI	
	UPI	
	WAB	
1N934	AMR	249 - 41
	CEN	
	CRI	
	HTN	
	IDC	
	SCE	
	SLD	
	SPE	
	SST	
1N935	Δ♦MOTA	184 - 68
	AMR	
	♦APD	
	CDI	
	CEN	
	CODI	
	CRI	
	DIT	
	♦GSE	
	HTN	
	IDC	
	♦MSC	
	SCE	
	♦SIEG	
	SLCB	
	SLD	
	SPE	
	SSI	
	SST	
	THEF	
	UPI	
	WAB	
1N935A	Δ♦MOTA	184 - 69
	AMR	
	♦APD	
	CDI	
	CEN	
	CODI	
	CRI	
	DIT	
	♦GSE	
	HTN	
	IDC	
	♦MSC	
	SCE	
	♦SIEG	
	♦SLCB	
	SLD	
	SPE	
	SSI	
	SST	
	THEF	
1N935B	Δ♦MOTA	184 - 70
	AMR	
	♦APD	
	CDI	
	CEN	
	CODI	
	CRI	
	DIT	
	♦GSE	
	HTN	
	IDC	
	♦MSC	
	SCE	
	♦SIEG	
	♦SLCB	
	SLD	
	SPE	
	SSI	
	SST	
	THEF	
	UPI	
1N936	Δ♦MOTA	184 - 71
	AMR	
	♦APD	
	CDI	
	CEN	
	CODI	
	CRI	
	DIT	
	GDC	
	♦GSE	
	HTN	
	IDC	
	♦MSC	
	SCE	
	♦SIEG	
	♦SLCB	
	SLD	
	SPE	
	SSI	
	SST	
	THEF	
1N936A	Δ♦MOTA	184 - 72
	AMR	
	♦APD	
	CDI	
	CEN	
	CODI	
	CRI	
	DIT	
	GDC	
	♦GSE	
	HTN	
	IDC	
	♦MSC	
	SCE	
	♦SIEG	
	♦SLCB	
	SLD	
	SPE	
	SSI	
	SST	
	THEF	
1N936B	Δ♦MOTA	184 - 73
	AMR	
	♦APD	
	CDI	
	CEN	
	CODI	
	CRI	
	DIT	
	GDC	
	♦GSE	
	HTN	
	IDC	
	♦MSC	
	SCE	
	♦SIEG	
	♦SLCB	
	SLD	
	SPE	
	SSI	
	SST	
	THEF	
1N937	Δ♦MOTA	184 - 74
	AMR	
	♦APD	
	CDI	
	CEN	
	CODI	
	CRI	
	DIT	
	GDC	
	♦GSE	
	HTN	
	IDC	
	♦MSC	
	SCE	
	♦SIEG	
	♦SLCB	
	SLD	
	SPE	
	SSI	
	SST	
	THEF	
	WAB	
1N937A	Δ♦MOTA	184 - 75
	AMR	
	♦APD	
	CDI	
	CEN	
	CODI	
	CRI	
	DIT	
	GDC	
	♦GSE	
	HTN	
	IDC	
	♦MSC	
	SCE	
	♦SIEG	
	♦SLCB	
	SLD	
	SPE	
	SSI	
	SST	
	THEF	
1N937B	Δ♦MOTA	184 - 76
	AMR	
	♦APD	
	CDI	
	CEN	
	CODI	
	CRI	
	DIT	
	GDC	
	♦GSE	
	HTN	
	IDC	
	♦MSC	
	SCE	
	♦SIEG	
	♦SLCB	
	SLD	
	SPE	
	SSI	
	SST	
	THEF	
	TIC	
	WAB	
1N938	Δ♦MOTA	184 - 77
	AMR	
	♦APD	
	CDI	
	CEN	
	CRI	
	DIT	
	GDC	
	♦GSE	
	HTN	
	IDC	
	♦MSC	
	SCE	
	♦SIEG	
	♦SLCB	
	SLD	
	SPE	
	SSI	
	THEF	
	WAB	
1N938A	Δ♦MOTA	184 - 78
	AMR	
	♦APD	
	CDI	
	CEN	
	CRI	
	DIT	
	GDC	
	♦GSE	
	HTN	
	IDC	
	♦MSC	
	SCE	
	♦SIEG	
	♦SLCB	
	SLD	
	SPE	
	SSI	
	THEF	
	WAB	
1N938B	Δ♦MOTA	184 - 79
	AMR	
	♦APD	
	CDI	
	CEN	
	CRI	
	DIT	
	GDC	
	♦GSE	
	HTN	
	IDC	
	♦MSC	
	SCE	
	♦SIEG	
	♦SLCB	
	SPE	
	SSI	
	THEF	
	UPI	
	WAB	
1N939	Δ♦MOTA	184 - 80
	AMR	
	♦APD	
	CDI	
	CRI	
	DIT	
	GDC	
	♦GSE	
	HTN	
	IDC	
	♦MSC	
	SCE	
	♦SIEG	
	♦SLCB	
	SPE	
	SSI	
	THEF	
	WAB	
1N939A	Δ♦MOTA	184 - 81
	AMR	
	♦APD	
	CDI	
	CRI	
	DIT	
	GDC	
	♦GSE	
	HTN	
	IDC	
	♦MSC	
	SCE	
	♦SIEG	
	♦SLCB	
	SPE	
	SSI	
	THEF	
1N939B	Δ♦MOTA	184 - 82
	AMR	
	♦APD	
	CDI	
	CRI	
	DIT	
	GDC	
	♦GSE	
	HTN	
	IDC	
	♦MSC	
	SCE	
	♦SIEG	
	♦SLCB	
	SPE	
	SSI	
	THEF	
	UPI	
	WAB	
1N940	AMR	184 - 83
	♦APD	
	CDI	
	CRI	
	DIT	
	GDC	
	♦GSE	
	HTN	
	IDC	
	♦MSC	
	SCE	
	♦SIEG	
	♦SLCB	
	SPE	
	SSI	
1N940A	AMR	184 - 84
	♦APD	
	CDI	
	CRI	
	DIT	
	GDC	
	HTN	
	IDC	
	♦MSC	
	SCE	
	♦SIEG	
	♦SLCB	
	SPE	
	SSI	
1N940B	AMR	184 - 85
	♦APD	
	CDI	
	CRI	
	DIT	
	GDC	
	HTN	
	IDC	
	♦MSC	
	SCE	
	♦SIEG	
	♦SLCB	
	SPE	
1N941	Δ♦MOTA	190 - 48
	AMR	
	♦APD	
	CDI	
	CEN	
	CRI	
	DIT	
	GDC	
	♦GSE	
	HTN	
	IDC	
	♦MSC	
	SCE	
	♦SIEG	
	SPE	
	SSI	
1N941A	Δ♦MOTA	190 - 49
	AMR	
	♦APD	
	CDI	
	CEN	
	CRI	
	DIT	
	GDC	
	♦GSE	
	HTN	
	IDC	
	♦MSC	
	SCE	
	♦SIEG	
	SPE	
	SSI	
	WAB	
1N941B	Δ♦MOTA	190 - 50
	AMR	
	♦APD	
	CDI	
	CEN	
	CRI	
	DIT	
	GDC	
	♦GSE	
	HTN	
	IDC	
	♦MSC	
	SCE	
	♦SIEG	
	SPE	
	SSI	
	WAB	
1N942	Δ♦MOTA	190 - 51
cont.next page		

Δ-Registered with JEDEC by this manufacturer

♦-Mfr's data sheet available in microfilm service

1. TYPE No. CROSS INDEX

IN TYPE NUMBER SEQUENCE

TYPE No.	MFRS	Pg&Line
1N942		
(cont.)	AMR	
	♦APD	
	CDI	
	CEN	
	CRI	
	DIT	
	GDC	
	♦GSE	
	HTN	
	IDC	
	♦MSC	
	SCE	
	♦SIEG	
	SPE	
	SSI	
	WAB	
1N942A	Δ♦MOTA	190 - 52
	AMR	
	♦APD	
	CDI	
	CEN	
	CRI	
	DIT	
	GDC	
	♦GSE	
	HTN	
	IDC	
	♦MSC	
	SCE	
	♦SIEG	
	SPE	
	SSI	
	WAB	
1N942B	Δ♦MOTA	190 - 53
	AMR	
	♦APD	
	CDI	
	CEN	
	CRI	
	DIT	
	GDC	
	♦GSE	
	HTN	
	IDC	
	♦MSC	
	SCE	
	♦SIEG	
	SPE	
	SSI	
	WAB	
1N943	Δ♦MOTA	190 - 54
	AMR	
	♦APD	
	CDI	
	CEN	
	CRI	
	DIT	
	GDC	
	♦GSE	
	HTN	
	IDC	
	♦MSC	
	SCE	
	♦SIEG	
	SPE	
	SSI	
	WAB	
1N943A	Δ♦MOTA	190 - 55
	AMR	
	♦APD	
	CDI	
	CEN	
	CRI	
	DIT	
	GDC	
	♦GSE	
	HTN	
	IDC	
	♦MSC	
	SCE	
	♦SIEG	
	SPE	
	SSI	
	WAB	
1N943B	Δ♦MOTA	190 - 56
	AMR	
	♦APD	
	CDI	
	CEN	
	CRI	
	DIT	
	GDC	
	♦GSE	
	HTN	
	IDC	
	♦MSC	
	SCE	
	♦SIEG	
	SPE	
	SSI	
	WAB	
1N944	Δ♦MOTA	190 - 57
	AMR	
	♦APD	
	CDI	
	CEN	
	CRI	
	DIT	
	GDC	
	♦GSE	
	HTN	
	IDC	
	♦MSC	
	SCE	
	♦SIEG	
	SPE	
	SSI	
	WAB	
1N944A	Δ♦MOTA	190 - 58
	AMR	
	♦APD	
	CDI	
	CEN	
	CRI	
	DIT	
	GDC	
	♦GSE	
	HTN	
	IDC	
	♦MSC	
	SCE	
	♦SIEG	
	SPE	
	SSI	
	WAB	
1N944B	Δ♦MOTA	190 - 59
	♦AMR	
	♦APD	
	CDI	
	CEN	
	CRI	
	DIT	
	GDC	
	GSE	
	HTN	
	IDC	
	♦MSC	
	SCE	
	♦SIEG	
	SPE	
	SSI	
1N945	Δ♦MOTA	190 - 60
	AMR	
	♦APD	
	CDI	
	CEN	
	CRI	
	DIT	
	GDC	
	HTN	
	IDC	
	♦MSC	
	SCE	
	♦SIEG	
	SPE	
	SSI	
1N945A	Δ♦MOTA	190 - 61
	AMR	
	♦APD	
	CDI	
	CEN	
	CRI	
	DIT	
	GDC	
	HTN	
	IDC	
	♦MSC	
	SCE	
	♦SIEG	
	SPE	
	SSI	
	THEF	
1N945B	Δ♦MOTA	190 - 62
	AMR	
	♦APD	
	CDI	
	CEN	
	CRI	
	DIT	
	GDC	
	HTN	
	IDC	
	♦MSC	
	SCE	
	♦SIEG	
	SPE	
	SSI	
	THEF	
1N946	AMR	190 - 32
	APD	
	CDI	
	CRI	
	DIT	
	GDC	
	HTN	
	IDC	
	♦MSC	
cont.next col.		

TYPE No.	MFRS	Pg&Line
1N946		
(cont.)	♦SIEG	
	SPE	
	SSI	
1N946A	AMR	190 - 33
	APD	
	CDI	
	CRI	
	DIT	
	GDC	
	HTN	
	IDC	
	♦MSC	
	♦SIEG	
	SPE	
	SSI	
1N946B	AMR	190 - 34
	APD	
	CDI	
	CRI	
	DIT	
	GDC	
	HTN	
	IDC	
	♦MSC	
	♦SIEG	
	SPE	
	SSI	
1N947	AMR	276 -105
	CEN	
	CRI	
	HTN	
	IDC	
	SPE	
1N948	AMR	248 - 99
	CEN	
	CRI	
	ETC	
	HTN	
	IDC	
	MDC	
	SPE	
1N949	AMR	231 - 88
	CEN	
	CRI	
	HTN	
	SCE	
	SLD	
	SPE	
	SST	
	STI	
	THEF	
	UPI	
1N957	AMR	178 - 14
	♦APD	
	CDIL	
	CEN	
	CODI	
	CRI	
	ETC	
	FGRS	
	♦FSC	
	GDC	
	HITJ	
	HTN	
	IDC	
	♦ITTG	
	KSI	
	MDC	
	MSC	
	NJS	
	RHM	
	SCE	
	SIEG	
	♦SLCB	
	SLD	
	SPE	
	SST	
	TRWS	
1N957A	Δ♦MOTA	178 - 9
	AMR	
	♦APD	
	CDIL	
	CEN	
	CODI	
	ETC	
	FGRS	
	♦FSC	
	HITJ	
	HTN	
	IDC	
	ITTG	
	KSI	
	MDC	
	MSC	
	NJS	
	RHM	
	SCE	
	SLCB	
	SPE	
	TRWS	
	WAB	
1N957B	Δ♦MOTA	177 -195
	AMR	
	♦APD	
	CDIL	
	CEN	
	CODI	
	ETC	
	FGRS	
	♦FSC	
	HITJ	
	HTN	
	IDC	
	♦INC	
	ITTG	
	KSI	
	MDC	
	♦MSC	
	NASG	
	NJS	
	RHM	
	SCE	
	♦SIEG	
	SLCB	
	SPE	
	SSY	
	THEF	
	TRWS	
	WAB	
1N958	AMR	180 - 12
	♦APD	
	CDIL	
	CEN	
	CODI	
	CRI	
	ETC	
	FGRS	
	♦FSC	
	GDC	
	HITJ	
	HTN	
	IDC	
	♦ITTG	
	KSI	
	MDC	
	MSC	
	NJS	
	RHM	
	SCE	
	SIEG	
	♦SLCB	
	SLD	
	SPE	
	SST	
	TRWS	
1N958A	Δ♦MOTA	180 - 6
	AMR	
	♦APD	
	CDIL	
	CEN	
	CODI	
	ETC	
	FGRS	
	♦FSC	
	HITJ	
	HTN	
	IDC	
	♦ITTG	
	KSI	
	MDC	
	MSC	
	NJS	
	RHM	
	SCE	
	SLCB	
	SPE	
	♦UNI	
1N958B	Δ♦MOTA	179 -181
	AMR	
	♦APD	
	CDIL	
	CEN	
	CODI	
	ETC	
	FGRS	
	♦FSC	
	HITJ	
	HTN	
	IDC	
	♦INC	
	ITTG	
	KSI	
	MDC	
	♦MSC	
	NJS	
	RHM	
	SCE	
	♦SIEG	
	♦SLCB	
	SPE	
	THEF	
	TRWS	
	WAB	

TYPE No.	MFRS	Pg&Line
1N959	AMR	181 -196
	♦APD	
	CDIL	
	CEN	
	CODI	
	CRI	
	ETC	
	FGRS	
	♦FSC	
	GDC	
	HITJ	
	HTN	
	IDC	
	♦ITTG	
	KSI	
	MDC	
	MSC	
	NJS	
	RHM	
	SCE	
	SIEG	
	♦SLCB	
	SLD	
	SPE	
	SST	
	TRWS	
1N959A	Δ♦MOTA	181 -189
	AMR	
	♦APD	
	CDIL	
	CEN	
	CODI	
	ETC	
	FGRS	
	♦FSC	
	HITJ	
	HTN	
	IDC	
	ITTG	
	KSI	
	MDC	
	MSC	
	NJS	
	RHM	
	SCE	
	SLCB	
	SPE	
	TRWS	
1N959B	Δ♦MOTA	181 -161
	AMR	
	♦APD	
	CDIL	
	CEN	
	CODI	
	ETC	
	FGRS	
	FSC	
	HITJ	
	HTN	
	IDC	
	♦INC	
	ITTG	
	KSI	
	MDC	
	♦MSC	
	NJS	
	RHM	
	SCE	
	♦SIEG	
	SLCB	
	SPE	
	THEF	
	TRWS	
1N960	Δ♦MOTA	185 - 26
	AMR	
	♦APD	
	CDIL	
	CEN	
	CODI	
	CRI	
	ESP	
	ETC	
	FGRS	
	♦FSC	
	GDC	
	HITJ	
	HTN	
	IDC	
	♦ITTG	
	KSI	
	MDC	
	♦MSC	
	NJS	
	RHM	
	SCE	
	SIEG	
	♦SLCB	
	SLD	
	SPE	
	SST	
	TRWS	
1N960A	Δ♦MOTA	185 - 21
	AMR	
	♦APD	
	CDIL	
	CEN	
	CODI	
	ESP	
	ETC	
	FGRS	
	♦FSC	
	HITJ	
	HTN	
	IDC	
	ITTG	
	KSI	
	MDC	
	MSC	
	NJS	
	RHM	
	SCE	
	SLCB	
	SPE	
	SSY	
	TRWS	
1N960B	Δ♦MOTA	184 -209
	AMR	
	♦APD	
	CDIL	
	CEN	
	CODI	
	ESP	
	ETC	
	FGRS	
	♦FSC	
	HITJ	
	HTN	
	IDC	
	♦INC	
	ITTG	
	KSI	
	MDC	
	♦MSC	
	NJS	
	RHM	
	SCE	
	♦SIEG	
	SLCB	
	SPE	
	THEF	
	TRWS	
	WAB	
1N961	AMR	187 - 71
	♦APD	
	CDIL	
	CEN	
	CODI	
	CRI	
	ESP	
	ETC	
	FGRS	
	♦FSC	
	GDC	
	HITJ	
	HTN	
	IDC	
	♦ITTG	
	KSI	
	MDC	
	MSC	
	NJS	
	RHM	
	SCE	
	SIEG	
	♦SLCB	
	SLD	
	SPE	
	SST	
	SSY	
	TRWS	
	UPI	
1N961A	Δ♦MOTA	187 - 65
	AMR	
	♦APD	
	CDIL	
	CEN	
	CODI	
	ESP	
	ETC	
	FGRS	
	♦FSC	
	HITJ	
	HTN	
	IDC	
	ITTG	
	KSI	
	MDC	
	MSC	
	NJS	
	RHM	
	SCE	
	SLCB	
	TRWS	
	UPI	
1N961B	Δ♦MOTA	187 - 35
	AMR	
	♦APD	
	CDIL	
	CEN	
cont.next col.		

TYPE No.	MFRS	Pg&Line
1N961B		
(cont.)	CODI	
	ESP	
	ETC	
	FGRS	
	♦FSC	
	HITJ	
	HTN	
	IDC	
	♦INC	
	ITTG	
	KSI	
	MDC	
	♦MSC	
	NJS	
	RHM	
	SCE	
	♦SIEG	
	SLCB	
	SPE	
	THEF	
	TRWS	
	WAB	
1N962	AMR	189 - 13
	♦APD	
	CDIL	
	CEN	
	CODI	
	CRI	
	ESP	
	ETC	
	FGRS	
	GDC	
	HITJ	
	HTN	
	IDC	
	♦ITTG	
	KSI	
	MDC	
	MSC	
	NJS	
	RHM	
	SCE	
	SIEG	
	♦SLCB	
	SLD	
	SPE	
	SPR	
	SST	
	THEF	
	TRWS	
1N962A	Δ♦MOTA	189 - 9
	AMR	
	♦APD	
	CDIL	
	CEN	
	CODI	
	ESP	
	ETC	
	FGRS	
	HITJ	
	HTN	
	IDC	
	ITTG	
	KSI	
	MDC	
	MSC	
	NJS	
	RHM	
	SCE	
	SIEG	
	SLCB	
	SPE	
	TRWS	
	WAB	
1N962B	Δ♦MOTA	188 -190
	AMR	
	♦APD	
	CDIL	
	CEN	
	CODI	
	ESP	
	ETC	
	FGRS	
	HITJ	
	HTN	
	IDC	
	♦INC	
	ITTG	
	KSI	
	MDC	
	♦MSC	
	NJS	
	RHM	
	SCE	
	♦SIEG	
	SLCB	
	SPE	
	THEF	
	TRWS	
	WAB	
1N963	AMR	190 -183
	♦APD	
	CDIL	
	CEN	
	CODI	
	CRI	
	ESP	
	ETC	
	FGRS	
	♦FSC	
	GDC	
	HITJ	
	HTN	
	IDC	
	♦ITTG	
	KSI	
	MDC	
	MSC	
	NJS	
	RHM	
	SCE	
	SIEG	
	♦SLCB	
	SLD	
	SPE	
	SST	
	THEF	
	TRWS	
1N963A	Δ♦MOTA	190 -177
	AMR	
	♦APD	
	CDIL	
	CEN	
	CODI	
	ESP	
	ETC	
	FGRS	
	♦FSC	
	HITJ	
	HTN	
	IDC	
	ITTG	
	KSI	
	MDC	
	MSC	
	NJS	
	RHM	
	SCE	
	SLCB	
	SPE	
	THEF	
	TRWS	
1N963B	Δ♦MOTA	190 -151
	AMR	
	♦APD	
	CDIL	
	CEN	
	CODI	
	ESP	
	ETC	
	FGRS	
	♦FSC	
	HITJ	
	HTN	
	IDC	
	♦INC	
	ITTG	
	KSI	
	MDC	
	♦MSC	
	NJS	
	RHM	
	SCE	
	♦SIEG	
	♦SLCB	
	SPE	
	THEF	
	TRWS	
	WAB	
1N964	AMR	192 -148
	♦APD	
	CDIL	
	CEN	
	CODI	
	CRI	
	ESP	
	ETC	
	FGRS	
	GDC	
	HITJ	
	HTN	
	IDC	
	♦ITTG	
	KSI	
	MDC	
	MSC	
	NJS	
	PSLI	
	RHM	
	SCE	
	SIEG	
	♦SLCB	
	SLD	
	SPE	
	SPR	
	SST	
	TRWS	
1N964A	Δ♦MOTA	192 -144
	AMR	
	♦APD	
cont.next col.		

TYPE No.	MFRS	Pg&Line
1N964A		
(cont.)	CDIL	
	CEN	
	CODI	
	ESP	
	ETC	
	FGRS	
	HITJ	
	HTN	
	IDC	
	ITTG	
	KSI	
	MDC	
	MSC	
	NJS	
	PSLI	
	RHM	
	SCE	
	SLCB	
	SPE	
	TRWS	
	WAB	
1N964B	Δ♦MOTA	192 -124
	AMR	
	♦APD	
	CDIL	
	CEN	
	CODI	
	ESP	
	ETC	
	FGRS	
	HITJ	
	HTN	
	IDC	
	♦INC	
	ITTG	
	KSI	
	MDC	
	♦MSC	
	NJS	
	PSLI	
	RHM	
	SCE	
	♦SIEG	
	SLCB	
	SPE	
	THEF	
	TRWS	
	WAB	
1N965	AMR	194 -171
	♦APD	
	CDIL	
	CEN	
	CRI	
	ESP	
	ETC	
	FGRS	
	♦FSC	
	GDC	
	HITJ	
	HTN	
	IDC	
	♦ITTG	
	KSI	
	MDC	
	MSC	
	NJS	
	PSLI	
	RHM	
	SCE	
	SIEG	
	♦SLCB	
	SLD	
	SPE	
	SPR	
	SST	
	TRWS	
1N965A	Δ♦MOTA	194 -167
	AMR	
	♦APD	
	CDIL	
	CEN	
	ESP	
	ETC	
	FGRS	
	♦FSC	
	HITJ	
	HTN	
	IDC	
	ITTG	
	KSI	
	MDC	
	MSC	
	NJS	
	PSLI	
	RHM	
	SCE	
	SLCB	
	SPE	
	TRWS	
1N965B	Δ♦MOTA	194 -148
	AMR	
	♦APD	
	CDIL	
	CEN	
	ESP	
	ETC	
	FGRS	
	♦FSC	
	HITJ	
	HTN	
	IDC	
	♦INC	
	ITTG	
	KSI	
	MDC	
	♦MSC	
	NJS	
	PSLI	
	RHM	
	SCE	
	♦SIEG	
	SLCB	
	SPE	
	THEF	
	TRWS	
	UPI	
	WAB	
1N966	AMR	196 - 76
	♦APD	
	CDIL	
	CEN	
	CRI	
	ESP	
	ETC	
	FGRS	
	GDC	
	HITJ	
	HTN	
	IDC	
	♦ITTG	
	KSI	
	MDC	
	MSC	
	NJS	
	RHM	
	SCE	
	SIEG	
	♦SLCB	
	SLD	
	SPE	
	SPR	
	SST	
	TRWS	
1N966A	Δ♦MOTA	196 - 73
	AMR	
	♦APD	
	CDIL	
	CEN	
	ESP	
	ETC	
	FGRS	
	HITJ	
	HTN	
	IDC	
	ITTG	
	KSI	
	MDC	
	MSC	
	NJS	
	RHM	
	SCE	
	SLCB	
	TRWS	
1N966B	Δ♦MOTA	196 - 53
	AMR	
	♦APD	
	CDIL	
	CEN	
	ESP	
	ETC	
	FGRS	
	HITJ	
	HTN	
	IDC	
	♦INC	
	ITTG	
	KSI	
	MDC	
	♦MSC	
	NJS	
	RHM	
	SCE	
	♦SIEG	
	SLCB	
	SPE	
	THEF	
	TRWS	
	WAB	
1N967	AMR	198 - 83
	♦APD	
	CDIL	
	CEN	
	CRI	
	ESP	
	ETC	
	FGRS	
	GDC	
	HITJ	
	HTN	
	IDC	
	♦ITTG	
cont.next page		

Δ-Registered with JEDEC by this manufacturer

♦-Mfr's data sheet available in microfilm service

1. TYPE No. CROSS INDEX

IN TYPE NUMBER SEQUENCE

TYPE No.	MFRS	Pg&Line
1N967		
(cont.)	KSI	
	MDC	
	MSC	
	NJS	
	RHM	
	SCE	
	SIEG	
	♦SLCB	
	SLD	
	SPE	
	SPR	
	SST	
	TRWS	
	♦UNI	
1N967A	Δ♦MOTA	198 - 78
	AMR	
	♦APD	
	CDIL	
	CEN	
	ESP	
	ETC	
	FGRS	
	HITJ	
	HTN	
	IDC	
	ITTG	
	KSI	
	MDC	
	MSC	
	NJS	
	RHM	
	SCE	
	SLCB	
	SPE	
	TRWS	
1N967B	Δ♦MOTA	198 - 59
	AMR	
	♦APD	
	CDIL	
	CEN	
	ESP	
	ETC	
	FGRS	
	HITJ	
	HTN	
	IDC	
	♦INC	
	ITTG	
	KSI	
	MDC	
	♦MSC	
	NJS	
	RHM	
	SCE	
	♦SIEG	
	SLCB	
	SPE	
	THEF	
	TIC	
	TRWS	
	UPI	
	WAB	
1N968	AMR	200 - 78
	♦APD	
	CDIL	
	CEN	
	CRI	
	ESP	
	ETC	
	FGRS	
	GDC	
	HITJ	
	HTN	
	IDC	
	♦ITTG	
	KSI	
	MDC	
	MSC	
	NJS	
	RHM	
	SCE	
	SIEG	
	♦SLCB	
	SLD	
	SPE	
	SPR	
	SST	
	TRWS	
1N968A	Δ♦MOTA	200 - 76
	AMR	
	♦APD	
	CDIL	
	CEN	
	ESP	
	ETC	
	FGRS	
	HITJ	
	HTN	
	IDC	
	ITTG	
	KSI	
	MDC	
	MSC	
	NJS	
	RHM	
	SCE	
	SLCB	
	SPE	
	THEF	
	TRWS	
	WAB	
1N968B	Δ♦MOTA	200 - 59
	AMR	
	♦APD	
	CDIL	
	CEN	
	ESP	
	ETC	
	FGRS	
	HITJ	
	HTN	
	IDC	
	♦INC	
	ITTG	
	KSI	
	MDC	
	♦MSC	
	NJS	
	RHM	
	SCE	
	♦SIEG	
	SLCB	
	SPE	
	THEF	
	TRWS	
	WAB	
1N968B-F	SPE	200 - 60
1N969	AMR	201 -186
	♦APD	
	CDIL	
	CEN	
	CRI	
	ESP	
	ETC	
	FGRS	
	GDC	
	HITJ	
	HTN	
	IDC	
	♦ITTG	
	KSI	
	MDC	
	MSC	
	NJS	
	RHM	
	SCE	
	SIEG	
	♦SLCB	
	SLD	
	SPE	
	SPR	
	SST	
	♦UNI	
1N969A	Δ♦MOTA	201 -182
	AMR	
	♦APD	
	CDIL	
	CEN	
	ESP	
	ETC	
	FGRS	
	HITJ	
	HTN	
	IDC	
	ITTG	
	KSI	
	MDC	
	MSC	
	NJS	
	RHM	
	SCE	
	SLCB	
	SPE	
1N969B	Δ♦MOTA	201 -164
	AMR	
	♦APD	
	CDIL	
	CEN	
	ESP	
	ETC	
	FGRS	
	HITJ	
	HTN	
	IDC	
	♦INC	
	ITTG	
	KSI	
	MDC	
	♦MSC	
	NJS	
	RHM	
	SCE	
	♦SIEG	
	SLCB	
	SPE	
	THEF	
	WAB	
1N970	AMR	203 - 85
cont.next col.		

TYPE No.	MFRS	Pg&Line
1N970		
(cont.)	♦APD	
	CDIL	
	CEN	
	CRI	
	ESP	
	ETC	
	FGRS	
	GDC	
	HITJ	
	HTN	
	IDC	
	♦ITTG	
	KSI	
	MDC	
	MSC	
	NJS	
	RHM	
	SCE	
	SIEG	
	♦SLCB	
	SLD	
	SPE	
	SPR	
	SST	
	WAB	
1N970A	Δ♦MOTA	203 - 82
	AMR	
	♦APD	
	CDIL	
	CEN	
	ESP	
	ETC	
	FGRS	
	HITJ	
	HTN	
	IDC	
	ITTG	
	KSI	
	MDC	
	MSC	
	NJS	
	RHM	
	SCE	
	SLCB	
	SPE	
	THEF	
1N970B	Δ♦MOTA	203 - 66
	AMR	
	♦APD	
	CDIL	
	CEN	
	ESP	
	ETC	
	FGRS	
	HITJ	
	HTN	
	IDC	
	♦INC	
	ITTG	
	KSI	
	MDC	
	♦MSC	
	NJS	
	RHM	
	SCE	
	♦SIEG	
	SLCB	
	SPE	
	THEF	
	WAB	
1N971	AMR	205 - 18
	♦APD	
	CDIL	
	CEN	
	ESP	
	ETC	
	FGRS	
	♦FSC	
	GDC	
	HITJ	
	HTN	
	IDC	
	♦ITTG	
	KSI	
	MDC	
	MSC	
	NJS	
	RHM	
	SCE	
	SIEG	
	♦SLCB	
	SLD	
	SPE	
	SPR	
	SST	
	TRWS	
1N971A	ΔMOTA	205 - 16
	AMR	
	♦APD	
	CDIL	
	CEN	
	CRI	
	ESP	
	ETC	
	FGRS	
	♦FSC	
	HITJ	
	HTN	
	IDC	
	ITTG	
	KSI	
	MDC	
	MSC	
	NJS	
	RHM	
	SCE	
	SLCB	
	SPE	
1N971B	ΔMOTA	204 -207
	AMR	
	♦APD	
	CDIL	
	CEN	
	ESP	
	ETC	
	FGRS	
	♦FSC	
	HITJ	
	HTN	
	IDC	
	♦INC	
	ITTG	
	KSI	
	MDC	
	♦MSC	
	NJS	
	RHM	
	SCE	
	SIEG	
	SLCB	
	SLD	
	SPE	
	SPR	
	SST	
	THEF	
1N972	AMR	206 -154
	♦APD	
	CDIL	
	CEN	
	CRI	
	ESP	
	ETC	
	FGRS	
	GDC	
	HITJ	
	HTN	
	IDC	
	♦ITTG	
	KSI	
	MDC	
	MSC	
	NJS	
	RHM	
	SCE	
	SIEG	
	♦SLCB	
	SLD	
	SPE	
	SPR	
	SST	
	THEF	
1N972A	ΔMOTA	206 -151
	AMR	
	♦APD	
	CDIL	
	CEN	
	ESP	
	ETC	
	FGRS	
	HITJ	
	HTN	
	IDC	
	ITTG	
	KSI	
	MDC	
	MSC	
	NJS	
	RHM	
	SCE	
	♦SLCB	
	SPE	
1N972B	ΔMOTA	206 -133
	AMR	
	♦APD	
	CDIL	
	CEN	
	ESP	
	ETC	
	FGRS	
	HITJ	
	HTN	
	IDC	
	♦INC	
	ITTG	
	KSI	
	MDC	
	♦MSC	
	NJS	
	RHM	
	SCE	
	♦SIEG	
	SLCB	
	SPE	
	THEF	
	UPI	
	WAB	

TYPE No.	MFRS	Pg&Line
1N973	AMR	208 - 42
	♦APD	
	CDIL	
	CEN	
	ESP	
	ETC	
	FGRS	
	GDC	
	HITJ	
	HTN	
	IDC	
	♦ITTG	
	KSI	
	MDC	
	MSC	
	NJS	
	RHM	
	SCE	
	SIEG	
	SLD	
	SPE	
	SPR	
	SST	
1N973A	AMR	208 - 39
	♦APD	
	CDIL	
	CEN	
	CRI	
	ESP	
	ETC	
	FGRS	
	HITJ	
	HTN	
	IDC	
	ITTG	
	KSI	
	MDC	
	MOTA	
	MSC	
	NJS	
	RHM	
	SCE	
	SPE	
1N973B	AMR	208 - 20
	♦APD	
	CDIL	
	CEN	
	ESP	
	ETC	
	FGRS	
	HITJ	
	HTN	
	IDC	
	♦INC	
	ITTG	
	KSI	
	MDC	
	MOTA	
	♦MSC	
	NJS	
	RHM	
	SCE	
	♦SIEG	
	SPE	
	THEF	
	WAB	
1N974	AMR	209 -120
	♦APD	
	CDIL	
	CEN	
	CRI	
	ESP	
	GDC	
	HITJ	
	HTN	
	IDC	
	MDC	
	MSC	
	NJS	
	SCE	
	SIEG	
	SLD	
	SPE	
	SPR	
	SST	
	THEF	
1N974A	AMR	209 -119
	♦APD	
	CDIL	
	CEN	
	ESP	
	HITJ	
	HTN	
	IDC	
	MDC	
	MOTA	
	MSC	
	NJS	
	SCE	
1N974B	AMR	209 -106
	♦APD	
	CDIL	
	CEN	
	ESP	
	HITJ	
	HTN	
	IDC	
	MDC	
	MOTA	
	♦MSC	
	NJS	
	SCE	
	♦SIEG	
	SPE	
	THEF	
	WAB	
1N975	AMR	210 -157
	♦APD	
	CEN	
	CRI	
	ESP	
	ETC	
	GDC	
	HTN	
	IDC	
	MDC	
	MSC	
	NJS	
	SCE	
	SIEG	
	SLD	
	SPE	
	SPR	
	SST	
1N975A	AMR	210 -156
	♦APD	
	CEN	
	ESP	
	ETC	
	HTN	
	IDC	
	MDC	
	MOTA	
	MSC	
	NJS	
	SCE	
	SPE	
1N975B	AMR	210 -143
	♦APD	
	CDIL	
	CEN	
	ESP	
	ETC	
	HTN	
	IDC	
	MDC	
	MOTA	
	♦MSC	
	NJS	
	SCE	
	♦SIEG	
	SPE	
	THEF	
	WAB	
1N976	AMR	211 -175
	♦APD	
	CEN	
	CRI	
	ESP	
	ETC	
	GDC	
	HTN	
	IDC	
	MDC	
	MSC	
	NJS	
	SCE	
	SIEG	
	SLD	
	SPE	
	SPR	
	SST	
	THEF	
	UPI	
1N976A	AMR	211 -174
	♦APD	
	CEN	
	ESP	
	ETC	
	HTN	
	IDC	
	MDC	
	MOTA	
	MSC	
	NJS	
	SCE	
	SPE	
1N976B	AMR	211 -163
	♦APD	
	CDIL	
	CEN	
	ESP	
	ETC	
	HTN	
	IDC	
	MDC	
	MOTA	
	♦MSC	
cont.next col.		

TYPE No.	MFRS	Pg&Line
1N976B		
(cont.)	NJS	
	SCE	
	♦SIEG	
	SPE	
	THEF	
1N977	AMR	212 -187
	♦APD	
	CEN	
	CRI	
	ESP	
	ETC	
	GDC	
	HTN	
	IDC	
	MDC	
	MSC	
	NJS	
	SCE	
	SIEG	
	SLD	
	SPE	
	SPR	
	SST	
1N977A	AMR	212 -185
	♦APD	
	CEN	
	ESP	
	ETC	
	HTN	
	IDC	
	MDC	
	MOTA	
	MSC	
	NJS	
	SCE	
	SPE	
	THEF	
1N977B	AMR	212 -175
	♦APD	
	CDIL	
	CEN	
	ESP	
	ETC	
	HTN	
	IDC	
	MDC	
	MOTA	
	♦MSC	
	NJS	
	SCE	
	♦SIEG	
	SPE	
	THEF	
	UPI	
1N978	AMR	213 -197
	♦APD	
	CEN	
	CRI	
	ESP	
	ETC	
	GDC	
	HTN	
	IDC	
	MDC	
	MSC	
	NJS	
	SCE	
	SPE	
1N978A	AMR	213 -196
	♦APD	
	CEN	
	ESP	
	ETC	
	HTN	
	IDC	
	MDC	
	MOTA	
	MSC	
	NJS	
	SCE	
	SPE	
1N978B	AMR	213 -187
	♦APD	
	CEN	
	ESP	
	ETC	
	HTN	
	IDC	
	MDC	
	MOTA	
	♦MSC	
	NJS	
	SCE	
	♦SIEG	
	SPE	
	THEF	
1N979	AMR	214 -182
	♦APD	
	CEN	
	CRI	
	ESP	
	ETC	
	GDC	
	HTN	
	IDC	
	MDC	
	♦MOTA	
	MSC	
	NJS	
	SCE	
	SIEG	
	SLD	
	SPE	
	♦SPR	
	SST	
1N979A	AMR	214 -181
	♦APD	
	CEN	
	CRI	
	ESP	
	ETC	
	HTN	
	IDC	
	MDC	
	MOTA	
	MSC	
	NJS	
	SCE	
	THEF	
1N979B	AMR	214 -172
	♦APD	
	CEN	
	ESP	
	ETC	
	HTN	
	IDC	
	MDC	
	MOTA	
	♦MSC	
	NJS	
	SCE	
	♦SIEG	
	SPE	
	THEF	
1N980	AMR	215 -192
	♦APD	
	CEN	
	CRI	
	ESP	
	ETC	
	GDC	
	HTN	
	IDC	
	MDC	
	MSC	
	NJS	
	SCE	
	SIEG	
	SLD	
	SPE	
	SST	
	THEF	
1N980A	AMR	215 -191
	♦APD	
	CEN	
	ESP	
	ETC	
	HTN	
	IDC	
	MDC	
	MOTA	
	MSC	
	NJS	
	SCE	
	SPE	
	THEF	
1N980B	AMR	215 -182
	♦APD	
	CEN	
	ESP	
	ETC	
	HTN	
	IDC	
	MDC	
	MOTA	
	♦MSC	
	NJS	
	SCE	
	♦SIEG	
	SPE	
	THEF	
1N981	AMR	216 -165
	♦APD	
	CEN	
	CRI	
	ESP	
	ETC	
	GDC	
	HTN	
	IDC	
cont.next col.		

TYPE No.	MFRS	Pg&Line
1N981		
(cont.)	MDC	
	MSC	
	NJS	
	SCE	
	SIEG	
	SLD	
	SPE	
	SST	
	THEF	
1N981A	AMR	216 -164
	♦APD	
	CEN	
	ESP	
	ETC	
	HTN	
	IDC	
	MDC	
	MOTA	
	MSC	
	NJS	
	SCE	
	SPE	
	THEF	
1N981B	AMR	216 -155
	♦APD	
	CEN	
	ESP	
	ETC	
	HTN	
	IDC	
	MDC	
	MOTA	
	♦MSC	
	NJS	
	SCE	
	♦SIEG	
	SPE	
	THEF	
1N982	AMR	217 -155
	CEN	
	CRI	
	ESP	
	GDC	
	HTN	
	MDC	
	MSC	
	NJS	
	SCE	
	SIEG	
	SLD	
	SPE	
	SST	
	THEF	
1N982A	AMR	217 -154
	CEN	
	ESP	
	HTN	
	MDC	
	MOTA	
	MSC	
	NJS	
	SCE	
	SPE	
1N982B	AMR	217 -145
	CEN	
	ESP	
	HTN	
	MDC	
	MOTA	
	♦MSC	
	NJS	
	SCE	
	♦SIEG	
	SPE	
	THEF	
	WAB	
1N983	AMR	218 -137
	CEN	
	CRI	
	ESP	
	GDC	
	HTN	
	IDC	
	MDC	
	MSC	
	NJS	
	SCE	
	SIEG	
	SLD	
	SPE	
	SST	
1N983A	AMR	218 -136
	CEN	
	ESP	
	HTN	
	IDC	
	MDC	
	MOTA	
	MSC	
	NJS	
	SCE	
	SPE	
1N983B	AMR	218 -129
	CEN	
	ESP	
	HTN	
	IDC	
	MDC	
	MOTA	
	♦MSC	
	NJS	
	SCE	
	♦SIEG	
	SPE	
	THEF	
1N984	AMR	219 -123
	CEN	
	CRI	
	ESP	
	GDC	
	HTN	
	IDC	
	MDC	
	MSC	
	NJS	
	SCE	
	SIEG	
	SLD	
	SPE	
	SST	
1N984A	AMR	219 -122
	CEN	
	ESP	
	HTN	
	IDC	
	MDC	
	MOTA	
	MSC	
	NJS	
	SCE	
	SPE	
1N984B	AMR	219 -115
	CEN	
	ESP	
	HTN	
	IDC	
	MDC	
	MOTA	
	♦MSC	
	NJS	
	SCE	
	♦SIEG	
	SPE	
	THEF	
1N985	AMR	220 - 80
	CEN	
	CRI	
	ESP	
	GDC	
	HTN	
	IDC	
	MSC	
	NJS	
	SCE	
	SIEG	
	SLD	
	SPE	
	SST	
	UPI	
1N985A	AMR	220 - 79
	CEN	
	ESP	
	HTN	
	IDC	
	MOTA	
	MSC	
	NJS	
	SCE	
	SPE	
1N985B	AMR	220 - 72
	CEN	
	ESP	
	HTN	
	IDC	
	MOTA	
	♦MSC	
	NJS	
	SCE	
	♦SIEG	
	SPE	
	THEF	
1N986	AMR	221 - 48
	CEN	
	CRI	
	ESP	
	GDC	
	HTN	
	IDC	
	MSC	
	SCE	
	SIEG	
	SLD	
	SPE	
	SST	

Δ-Registered with JEDEC by this manufacturer

♦-Mfr's data sheet available in microfilm service

1. TYPE No. CROSS INDEX

IN TYPE NUMBER SEQUENCE

TYPE No.	MFRS	Pg&Line
1N986A	AMR	221 - 47
CEN	ESP	
HTN	IDC	
MOTA	MSC	
SCE	SPE	
1N986B	AMR	221 - 42
CEN	ESP	
HTN	IDC	
MOTA	♦MSC	
SCE	♦SIEG	
SPE	THEF	
1N987	AMR	221 -190
CEN	CRI	
ESP	GDC	
HTN	IDC	
MSC	SCE	
SIEG	SLD	
SPE	SST	
1N987A	AMR	221 -189
CEN	ESP	
HTN	IDC	
MOTA	MSC	
SCE	SPE	
1N987B	AMR	221 -184
CEN	ESP	
HTN	IDC	
♦MSC	SCE	
♦SIEG	SPE	
THEF	UPI	
1N988	AMR	222 -144
CEN	ESP	
GDC	HTN	
IDC	MSC	
SCE	SIEG	
SLD	SPE	
	SST	
1N988A	AMR	222 -143
CEN	CRI	
ESP	HTN	
IDC	MOTA	
MSC	SCE	
	SPE	
1N988B	AMR	222 -137
CEN	ESP	
HTN	IDC	
♦MSC	SCE	
♦SIEG	SPE	
	THEF	
1N989	AMR	223 -170
CEN	CRI	
ESP	GDC	
HTN	IDC	
MSC	SCE	
SIEG	SLD	
SPE	SST	
1N989A	AMR	223 -169
CEN	ESP	
HTN	IDC	
MOTA	MSC	
SCE	SPE	
1N989B	CEN	223 -163
ESP	HTN	
IDC	♦MSC	
SCE	♦SIEG	
SPE	THEF	
1N990	CEN	224 -122
CRI	ESP	
GDC	HTN	
IDC	MSC	
SCE	SLD	
SPE	SST	
1N990A	CEN	224 -121
ESP	HTN	
IDC	MOTA	
MSC	SCE	
	SPE	
1N990B	CEN	224 -115
ESP	HTN	
IDC	♦MSC	
SCE	♦SIEG	
SPE	SSY	
THEF	UPI	
1N991	CEN	225 -126
CRI	ESP	
GDC	HTN	
IDC	MSC	
SCE	SLD	
SPE	SST	
1N991A	CEN	225 -125
ESP	HTN	
IDC	MOTA	
MSC	SCE	
	SPE	
1N991B	CEN	225 -119
ESP	HTN	
IDC	♦MSC	
SCE	♦SIEG	
SPE	THEF	
1N992	CEN	226 -131
CRI	ESP	
GDC	HTN	
MSC	SCE	
SLD	SPE	
	SST	
1N992A	CEN	226 -130
ESP	HTN	
MOTA	MSC	
SCE	SPE	
1N992B	CEN	226 -124
ESP	HTN	
♦MSC	SCE	
♦SIEG	SPE	
	THEF	

TYPE No.	MFRS	Pg&Line
1N993	CEN	244 -151
CRI	HTN	
IDC	MDC	
MSC	SLD	
	SST	
1N994	CRI	244 - 17
HTN	♦IDC	
♦ITTG	SLD	
SPE	SST	
1N995	ASI	244 -116
CRI	HTN	
♦IDC	♦ITTG	
MISI	SCE	
SLD	SPE	
SST	STI	
THEF	WAB	
1N996	CEN	242 -172
CRI	HTN	
♦IDC	♦ITTG	
MDC	SCE	
SLD	SPE	
SST	STI	
1N997	CEN	245 - 56
CRI	HTN	
IDC	SLD	
SPE	SST	
1N998	CRI	274 - 8
HTN	SPE	
SSI	UPI	
1N999	ASI	247 - 12
CRI	HTN	
IDC	SPE	
SSI	WAB	
1N1028	ASI	276 -142
CRI	HTN	
IDC	SPE	
SSI	WAB	
1N1029	CRI	276 -164
HTN	SPE	
	SSI	
1N1030	CRI	276 -170
HTN	SPE	
	SSI	
1N1031	ASI	276 -188
CRI	HTN	
SPE	SSI	
UPI	WAB	
1N1032	CRI	276 -204
HTN	SPE	
SSI	UPI	
1N1033	CRI	277 - 8
HTN	SPE	
SSI	UPI	
1N1034	CRI	280 - 28
EDL	HTN	
IDC	SCN	
SPE	SSI	
1N1035	CRI	280 -108
EDL	HTN	
IDC	SCN	
SPE	SSI	
1N1036	CRI	280 -125
EDL	HTN	
SCN	SPE	
	SSI	
1N1037	CRI	280 -206
EDL	HTN	
SCN	SPE	
	SSI	
1N1038	CRI	281 - 23
EDL	HTN	
IDC	SCN	
SPE	SSI	
1N1039	CRI	281 -111
EDL	HTN	
SCN	SPE	
	SSI	
1N1040	CRI	280 - 29
EDL	HTN	
IDC	SCN	
SPE	SSI	
1N1041	CRI	280 -109
EDL	HTN	
IDC	SCN	
SPE	SSI	
1N1042	CRI	280 -126
EDL	HTN	
SCN	SPE	
	SSI	
1N1043	CRI	280 -207
EDL	HTN	
SCN	SPE	
	SSI	
1N1044	CRI	281 - 24
EDL	HTN	
IDC	SCN	
SPE	SSI	
1N1045	CRI	281 -112
EDL	HTN	
SCN	SPE	
	SSI	
1N1046	CRI	280 - 30
HTN	IDC	
SPE	SSI	
1N1047	CRI	280 -110
HTN	IDC	
SPE	SSI	
1N1048	CRI	280 -127
HTN	SPE	
	SSI	
1N1049	CRI	280 -208
HTN	SPE	
	SSI	

TYPE No.	MFRS	Pg&Line
1N1050	CRI	281 - 25
HTN	IDC	
SPE	SSI	
1N1051	CRI	281 -113
HTN	SPE	
	SSI	
1N1052	ΔSAR	283 -113
CEN	CRI	
HTN	IDC	
SPE	SSI	
	UPI	
1N1053	ΔSAR	283 -171
CEN	CRI	
HTN	SPE	
SSI	UPI	
1N1054	ΔSAR	283 -177
CEN	CRI	
HTN	SPE	
SSI	UPI	
1N1055	ΔSAR	284 - 19
CEN	CRI	
HTN	SPE	
SSI	UPI	
1N1056	ΔSAR	284 - 60
CEN	CRI	
HTN	SPE	
SSI	UPI	
1N1057	ΔSAR	284 -126
CEN	CRI	
HTN	SPE	
SSI	UPI	
1N1058	ΔSAR	290 -122
CRI	HTN	
IDC	SPE	
	SSI	
1N1059	ΔSAR	290 -148
CRI	EDL	
HTN	SPE	
	SSI	
1N1060	ΔSAR	290 -161
CRI	EDL	
HTN	SPE	
	SSI	
1N1061	ΔSAR	290 -186
CRI	EDL	
♦HTN	SPE	
	SSI	
1N1062	ΔSAR	290 -207
CRI	EDL	
HTN	SPE	
	SSI	
1N1063	Δ♦SAR	291 - 15
CRI	EDL	
HTN	SPE	
	SSI	
1N1064	ΔSAR	290 -123
CRI	EDL	
HTN	IDC	
SPE	SSI	
1N1065	ΔSAR	290 -149
CRI	EDL	
HTN	♦SPE	
	SSI	
1N1066	ΔSAR	290 -162
CRI	EDL	
HTN	SPE	
	SSI	
1N1067	ΔSAR	290 -187
CRI	HTN	
SPE	SSI	
1N1068	ΔSAR	290 -208
CRI	HTN	
SPE	SSI	
1N1069	ΔSAR	291 - 16
CRI	EDL	
HTN	SPE	
	SSI	
1N1070	ΔSAR	290 -124
CRI	SPE	
	SSI	
1N1071	Δ♦SAR	290 -150
CRI	SPE	
	SSI	
1N1072	ΔSAR	290 -163
CRI	SPE	
	SSI	
1N1073	ΔSAR	290 -188
CRI	SPE	
	SSI	
1N1074	Δ♦SAR	290 -209
CRI	SPE	
	SSI	
1N1075	ΔSAR	291 - 17
CRI	SSI	
1N1076	ΔSAR	296 - 34
CRI	SSI	
1N1077	ΔSAR	296 - 56
	CRI	
1N1078	ΔSAR	296 - 70
	CRI	
1N1079	ΔSAR	296 - 92
	CRI	
1N1080	ΔSAR	296 -107
	CRI	
1N1081	ΔSAR	276 -165
CEN	CRI	
HTN	SCN	
	SPE	
1N1081A	CEN	278 - 19
	SCN	
1N1082	ΔSAR	276 -189
AMX	CEN	
CRI	HTN	
SCN	SPE	

TYPE No.	MFRS	Pg&Line
1N1082A	AMX	278 - 59
CEN	SCN	
1N1083	ΔSAR	276 -205
AMX	CEN	
CRI	HTN	
SCN	SPE	
1N1083A	AMX	278 -104
CEN	SCN	
1N1084	ΔSAR	277 - 9
AMX	CEN	
CRI	HTN	
INRJ	SCN	
	SPE	
1N1084A	AMX	278 -140
CEN	SCN	
1N1085	AMX	283 -172
CEN	HTN	
SCN	SPE	
	UPI	
1N1085A	AMX	286 - 37
CEN	CRI	
SAR	SCN	
1N1086	AMX	284 - 20
CEN	CRI	
HTN	IDC	
	SCN	
1N1086A	AMX	286 - 78
CEN	SAR	
	SCN	
1N1087	AMX	284 - 61
CEN	CRI	
HTN	SCN	
1N1087A	AMX	286 - 94
CEN	SAR	
	SCN	
1N1088	AMX	284 -127
CEN	CRI	
HTN	SCN	
	SPE	
1N1088A	AMX	286 -126
CEN	SAR	
SCN	SPE	
1N1089	ΔSAR	290 -151
AMX	CEN	
CRI	HTN	
	SCN	
1N1089A	AMX	290 -152
CEN	SAR	
1N1090	ΔSAR	290 -189
AMX	CEN	
HTN	IDC	
	SCN	
1N1090A	AMX	290 -190
CEN	SAR	
1N1091	ΔSAR	290 -210
AMX	CEN	
CRI	HTN	
	SCN	
1N1091A	AMX	290 -211
CEN	SAR	
1N1092	ΔSAR	291 - 18
AMX	CEN	
CRI	HTN	
SCN	SPE	
1N1092A	AMX	291 - 19
CEN	SAR	
1N1093	CEN	242 -166
CRI	HTN	
♦IDC	STI	
1N1095	CEI	278 -177
CEN	CRI	
ETC	HTN	
IDC	IDI	
MAL	SAR	
SCN	♦SLCB	
SLD	SPE	
SST	THEF	
1N1096	ASI	278 -211
CEI	CEN	
CRI	ETC	
HTN	IDC	
IDI	MAL	
SAR	SCN	
♦SLCB	SLD	
SPE	SST	
THEF	WAB	
1N1100	CEI	279 - 59
CEN	CRI	
ETC	HTN	
IDC	MAL	
SAR	SCN	
SLD	SST	
	UPI	
1N1101	CEI	279 - 60
CEN	CRI	
ETC	HTN	
IDC	MAL	
SAR	SCN	
SLD	SST	
	UPI	
1N1102	CEI	279 - 61
CEN	CRI	
ETC	HTN	
IDC	MAL	
SAR	SCN	
SLD	SST	
	UPI	
1N1103	CEI	279 - 62
CEN	CRI	
ETC	HTN	
IDC	MAL	
SAR	SCN	
SLD	SST	
	UPI	

TYPE No.	MFRS	Pg&Line
1N1104	CEI	279 - 63
CEN	CRI	
ETC	HTN	
IDC	MAL	
SAR	SCN	
SLD	SST	
1N1105	CEI	279 - 4
CEN	CRI	
ETC	HTN	
IDC	MAL	
SAR	SCN	
SLD	SST	
1N1108	ΔSAR	276 -117
AMX	CEN	
CRI	ETC	
HTN	IDC	
SCN	♦SOD	
SSI	UTX	
1N1109	ΔSAR	405 -213
AMX	CEN	
CRI	HTN	
SCN	♦SOD	
SSI	UTX	
1N1110	ΔSAR	412 - 18
AMX	CRI	
HTN	SCN	
♦SOD	SSI	
	UTX	
1N1111	ΔSAR	415 - 18
AMX	CRI	
HTN	SCN	
♦SOD	SSI	
	UTX	
1N1112	ΔSAR	416 -216
AMX	CRI	
HTN	SCN	
♦SOD	SSI	
	UTX	
1N1113	ΔSAR	418 -158
AMX	CRI	
HTN	SCN	
♦SOD	SSI	
	UTX	
1N1115	ASI	283 -170
CEN	CRI	
EDL	ETC	
HTN	IDC	
♦MAL	SAR	
SCN	SLD	
SOD	SPE	
SSI	SST	
UPI	WAB	
1N1116	ASI	284 - 18
CEN	CRI	
EDL	ETC	
HTN	IDC	
♦MAL	SAR	
SCN	SLD	
SOD	SPE	
SSI	SST	
UPI	WAB	
1N1117	ASI	284 - 59
CEN	CRI	
EDL	ETC	
HTN	♦MAL	
SAR	SCN	
SLD	SOD	
SPE	SSI	
SST	UPI	
	WAB	
1N1118	ASI	284 -125
CEN	EDL	
ETC	HTN	
♦MAL	SAR	
SCN	SLD	
SOD	SPE	
SSI	SST	
	UPI	
1N1119	ASI	284 -160
CEN	CRI	
EDL	ETC	
HTN	♦MAL	
SAR	SCN	
SLD	SOD	
	SSI	
1N1120	ASI	284 -218
CEN	CRI	
EDL	ETC	
HTN	IDC	
♦MAL	SAR	
SCN	SLD	
SOD	SPE	
SSI	WAB	
1N1124	ASI	288 - 91
CEI	CEN	
COO	CRI	
DII	EDL	
ETC	GTC	
HTN	IDI	
MAL	♦PRX	
SAR	SCN	
SLCB	SOD	
SPE	SSI	
UPI	WAB	
1N1124A	ASI	254 -100
CEI	CEN	
DII	EDL	
ETC	GTC	
HTN	IDC	
IDI	♦MAL	
♦PRX	SAR	
SCN	SLD	
SOD	SPE	

cont.next page

Δ-Registered with JEDEC by this manufacturer

♦-Mfr's data sheet available in microfilm service

1. TYPE No. CROSS INDEX

IN TYPE NUMBER SEQUENCE

TYPE No.	MFRS	Pg&Line
1N1124A		
(cont.)	♦SSI	
SST	UPI	
	WAB	
1N1125	ASI	288 -148
CEI	CEN	
CRI	DII	
EDL	ETC	
GTC	HTN	
IDC	IDI	
♦MAL	♦PRX	
SAR	SCN	
SLCB	SOD	
SSI	UPI	
	WAB	
1N1125A	ASI	254 -146
CEI	CEN	
DII	EDL	
ETC	GTC	
HTN	IDC	
IDI	MAL	
♦PRX	SAR	
SCN	SLD	
SOD	♦SSI	
SST	UPI	
	WAB	
1N1126	ASI	288 -189
CEI	CEN	
♦COO	CRI	
DII	EDL	
ETC	GTC	
HTN	IDI	
♦MAL	♦PRX	
SAR	SCN	
SLCB	SOD	
SSI	UPI	
	WAB	
1N1126A	ASI	255 - 16
CEI	CEN	
DII	EDL	
ETC	GTC	
HTN	IDI	
♦MAL	♦PRX	
SAR	SCN	
SLD	SOD	
♦SSI	SST	
	WAB	
1N1127	ASI	289 - 19
CEI	CEN	
CRI	DII	
EDL	ETC	
GTC	HTN	
IDI	♦MAL	
♦PRX	SAR	
SCN	SLCB	
SOD	SPE	
SSI	UPI	
	WAB	
1N1127A	ASI	255 - 58
CEI	CEN	
DII	EDL	
ETC	GTC	
HTN	IDI	
MAL	♦PRX	
SAR	SCN	
SLD	SOD	
♦SSI	SST	
	WAB	
1N1128	ASI	289 - 55
CEI	CEN	
♦COO	CRI	
DII	EDL	
ETC	GTC	
HTN	IDI	
♦MAL	♦PRX	
SAR	SCN	
SLCB	SOD	
SSI	UPI	
	WAB	
1N1128A	ASI	255 -140
CEI	CEN	
DII	EDL	
ETC	GTC	
HTN	IDC	
IDI	♦MAL	
♦PRX	SAR	
SCN	SLD	
SOD	SPE	
♦SSI	WAB	
1N1130	CRI	411 - 24
DII	HTN	
SCN	SPE	
1N1131	ASI	411 - 25
DII	HTN	
SCN	WAB	
1N1133	♦CODI	410 -208
CRI	DII	
EDL	HTN	
PDE	SCN	
♦SOD	SPE	
SSI	TRWS	
	UTX	
1N1134	♦CODI	411 - 1
CRI	DII	
EDL	HTN	
PDE	SCN	
♦SOD	SSI	
TRWS	UTX	
1N1135	♦CODI	413 -192
CRI	DII	
EDL	HTN	
PDE	SCN	
♦SOD	SSI	
TRWS	UTX	

TYPE No.	MFRS	Pg&Line
1N1136	♦CODI	413 -193
CRI	DII	
EDL	HTN	
PDE	SCN	
♦SOD	SSI	
TRWS	UTX	
1N1137	♦CODI	416 -202
CRI	DII	
EDL	HTN	
PDE	SCN	
♦SOD	SSI	
TRWS	UTX	
1N1138	♦CODI	416 -205
CRI	DII	
EDL	HTN	
PDE	SCN	
♦SOD	SSI	
TRWS	UTX	
1N1139	♦CODI	421 - 1
CRI	DII	
EDL	HTN	
PDE	SCN	
♦SOD	SSI	
TRWS	UTX	
1N1140	♦CODI	421 - 2
CRI	DII	
EDL	HTN	
PDE	SCN	
♦SOD	SPE	
SSI	TRWS	
	UTX	
1N1141	CODI	423 - 21
CRI	DII	
EDL	HTN	
PDE	SCN	
SOD	SSI	
TRWS	UTX	
1N1142	♦CODI	423 - 20
CRI	DII	
EDL	HTN	
PDE	SCN	
SOD	SSI	
TRWS	UTX	
1N1143	♦CODI	424 -152
CRI	DII	
EDL	HTN	
PDE	SCN	
SOD	SSI	
TRWS	UTX	
1N1143A	♦CODI	424 -154
DII	EDL	
HTN	SCN	
SOD	SSI	
	TRWS	
1N1144	♦CODI	425 -124
CRI	DII	
EDL	HTN	
PDE	SCN	
SOD	SSI	
TRWS	UTX	
1N1145	♦CODI	425 -125
CRI	DII	
EDL	HTN	
PDE	SCN	
SOD	SPE	
SSI	TRWS	
	UTX	
1N1146	♦CODI	426 - 18
CRI	DII	
EDL	HTN	
PDE	SCN	
SOD	SPE	
SSI	TRWS	
	UTX	
1N1147	♦CODI	428 - 59
CRI	DII	
EDL	HTN	
INR	INRJ	
PDE	SCN	
SOD	SPE	
SSI	TRWS	
	UTX	
1N1148	♦CODI	428 -197
CRI	DII	
EDL	HTN	
PDE	SCN	
SOD	SPE	
SSI	TRWS	
	UTX	
1N1149	♦CODI	429 -184
DII	EDL	
HTN	INR	
INRJ	PDE	
SCN	SOD	
SPE	SSI	
TRWS	UTX	
1N1150	AMX	412 - 35
CEI	CRI	
EDL	SCN	
SOD	SPE	
♦SSI	UTX	
1N1150A	ΔSAR	412 - 36
AMX	EDL	
INRJ	PDE	
SCN	SPE	
	SSI	
1N1169	CEI	279 - 66
CEN	CRI	
HTN	SAR	
SCN	SPE	
SSY	UPI	
	WAB	
1N1169A	CEI	277 - 10
cont.next col.		

TYPE No.	MFRS	Pg&Line
1N1169A		
(cont.)	CEN	
ETC	HTN	
SAR	SCN	
	UPI	
1N1183	Δ♦PRX	300 -199
ASI	CEI	
CEN	COO	
CRI	♦DII	
DIT	EDL	
ETC	GTC	
HTN	IDI	
♦INR	INRJ	
MOTA	NJS	
SAR	SCN	
SLD	SOD	
SPE	♦SSEI	
♦SSI	SST	
THEF	TRWS	
UPI	WAB	
1N1183A	ASI	301 - 98
CEI	CEN	
COO	DII	
EDL	GTC	
HTN	IDC	
IDI	INR	
MOTA	NJS	
PRX	SAR	
SCN	SOD	
SPE	♦SSEI	
♦SSI	SST	
	WAB	
1N1184	Δ♦PRX	300 -210
ASI	CEI	
CEN	♦COO	
CRI	♦DII	
EDL	ETC	
GTC	HTN	
IDI	♦INR	
INRJ	MOTA	
♦NAT	NJS	
SAR	SCN	
SLD	SOD	
SPE	♦SSEI	
♦SSI	STR	
THEF	TIC	
TRWS	UPI	
	WAB	
1N1184A	ASI	301 -118
CEI	CEN	
♦COO	DII	
EDL	ETC	
GTC	HTN	
IDC	IDI	
INR	INRJ	
MOTA	♦NAT	
NJS	PRX	
SAR	SCN	
SOD	SPE	
♦SSEI	♦SSI	
SST	STR	
	WAB	
1N1185	Δ♦PRX	300 -216
ASI	CEI	
CEN	COO	
CRI	♦DII	
♦DIT	EDL	
ETC	GTC	
HSE	HTN	
IDI	♦INR	
INRJ	MOTA	
NJS	SAR	
SCN	SOD	
SPE	♦SSI	
STR	TRWS	
UPI	WAB	
1N1185A	ASI	301 -124
CEI	CEN	
COO	DII	
♦DIT	EDL	
GTC	HSE	
HTN	IDC	
IDI	INR	
INRJ	MOTA	
NJS	PRX	
SAR	SCN	
SOD	SPE	
SSI	STR	
	WAB	
1N1186	Δ♦PRX	254 -101
ASI	CEI	
CEN	♦COO	
CRI	♦DII	
♦DIT	EDL	
ETC	GTC	
HSE	HTN	
IDI	♦INR	
INRJ	MOTA	
♦NAT	NJS	
SAR	SCN	
SLD	SOD	
SPE	♦SSEI	
♦SSI	SST	
STR	THEF	
TRWS	UPI	
	WAB	
1N1186A	ASI	301 -146
CEI	CEN	
♦COO	DII	
♦DIT	EDL	
ETC	GTC	
HSE	HTN	
IDC	IDI	
cont.next col.		

TYPE No.	MFRS	Pg&Line
1N1186A		
(cont.)	INR	
INRJ	MOTA	
♦NAT	NJS	
PRX	SAR	
SCN	SOD	
SPE	♦SSEI	
SSI	SST	
STR	TIC	
	WAB	
1N1187	Δ♦PRX	254 -147
ASI	CEI	
CEN	COO	
CRI	♦DII	
♦DIT	EDL	
ETC	GTC	
HSE	HTN	
IDI	♦INR	
INRJ	MOTA	
♦NAT	NJS	
SAR	SCN	
SLD	SOD	
SPE	♦SSI	
SST	STR	
THEF	TRWS	
UPI	WAB	
1N1187A	ASI	301 -166
CEI	CEN	
COO	♦DIT	
EDL	ETC	
GTC	HSE	
HTN	IDC	
IDI	INR	
INRJ	MOTA	
♦NAT	NJS	
PRX	SAR	
SCN	SOD	
SPE	SSI	
SST	STR	
	WAB	
1N1188	Δ♦PRX	255 - 17
ASI	CEI	
CEN	♦COO	
CRI	♦DII	
♦DIT	EDL	
ETC	GTC	
HSE	HTN	
IDI	♦INR	
INRJ	MOTA	
♦NAT	NJS	
SAR	SCN	
SLD	SOD	
SPE	♦SSEI	
♦SSI	SST	
STR	THEF	
TIC	TRWS	
UPI	WAB	
1N1188A	ASI	301 -192
CEI	CEN	
♦COO	DII	
♦DIT	EDL	
ETC	GTC	
HSE	HTN	
IDC	IDI	
INR	INRJ	
MOTA	♦NAT	
NJS	PRX	
SAR	SCN	
SOD	SPE	
♦SSEI	SSI	
SST	STR	
	WAB	
1N1189	Δ♦PRX	255 - 59
ASI	CEI	
CEN	COO	
♦DII	EDL	
ETC	GTC	
HSE	HTN	
IDI	♦INR	
INRJ	MOTA	
♦NAT	NJS	
SAR	SCN	
SLD	SOD	
SPE	♦SSI	
SST	STR	
THEF	UPI	
	WAB	
1N1189A	ASI	301 -204
CEI	CEN	
COO	DII	
EDL	ETC	
GTC	HSE	
HTN	IDC	
IDI	INR	
INRJ	MOTA	
♦NAT	NJS	
PRX	SAR	
SCN	SOD	
SPE	SSI	
SST	STR	
	WAB	
1N1190	Δ♦PRX	255 -141
ASI	CEI	
CEN	♦COO	
CRI	♦DII	
DIT	EDL	
ETC	GTC	
HSE	HTN	
IDI	♦INR	
INRJ	MOTA	
♦NAT	NJS	
SAR	SCN	
SLD	SPE	
cont.next col.		

TYPE No.	MFRS	Pg&Line
1N1190		
(cont.)	♦SSEI	
♦SSI	SST	
STR	THEF	
UPI	WAB	
1N1190A	ASI	302 - 8
CEI	CEN	
♦COO	DII	
EDL	GTC	
HSE	HTN	
IDC	IDI	
INR	INRJ	
MOTA	♦NAT	
NJS	PRX	
SAR	SCN	
SOD	SPE	
♦SSEI	SSI	
SST	STR	
TIC	WAB	
1N1191	Δ♦PRX	297 - 69
ASI	CEI	
CEN	COO	
CRI	DII	
EDL	ETC	
GTC	HSE	
HTN	IDI	
MOTA	NJS	
SAR	SCN	
SOD	SPE	
♦SSI	STR	
UPI	WAB	
1N1191A	ASI	298 - 14
CEI	CEN	
COO	EDL	
ETC	GTC	
HSE	HTN	
IDC	IDI	
NJS	PRX	
SAR	SCN	
SOD	SPE	
SSI	STR	
TIC	UPI	
	WAB	
1N1192	Δ♦PRX	298 -149
ASI	CEI	
CEN	COO	
CRI	DII	
EDL	ETC	
GTC	HSE	
HTN	IDI	
MOTA	NJS	
SAR	SCN	
SOD	SPE	
♦SSI	STR	
UPI	WAB	
1N1192A	ASI	298 - 20
CEI	CEN	
COO	EDL	
ETC	GTC	
HSE	HTN	
IDC	IDI	
♦NAT	NJS	
PRX	SAR	
SCN	SOD	
SPE	SSI	
STR	TIC	
UPI	WAB	
1N1193	Δ♦PRX	298 -169
ASI	CEI	
CEN	COO	
CRI	DII	
EDL	ETC	
GTC	HSE	
HTN	IDI	
MOTA	NJS	
SAR	SCN	
SOD	SPE	
♦SSI	STR	
UPI	WAB	
1N1193A	ASI	298 - 24
CEI	CEN	
COO	EDL	
ETC	GTC	
HSE	HTN	
IDC	IDI	
NJS	PRX	
SAR	SCN	
SOD	SPE	
SSI	STR	
UPI	WAB	
1N1194	Δ♦PRX	298 -209
ASI	CEI	
CEN	COO	
CRI	DII	
EDL	ETC	
GTC	HSE	
HTN	IDI	
MOTA	NJS	
SAR	SCN	
SOD	SPE	
♦SSI	STR	
UPI	WAB	
1N1194A	ASI	298 - 31
CEI	CEN	
COO	EDL	
ETC	GTC	
HSE	HTN	
IDC	IDI	
♦NAT	NJS	
PRX	SAR	
SCN	SOD	
SPE	SSI	
STR	TIC	
UPI	WAB	

Δ-Registered with JEDEC by this manufacturer

♦-Mfr's data sheet available in microfilm service

1. TYPE No. CROSS INDEX

IN TYPE NUMBER SEQUENCE

TYPE No.	MFRS	Pg&Line
1N1195	Δ♦PRX	299 - 19
	ASI	
	CEI	
	CEN	
	COO	
	CRI	
	DII	
	EDL	
	ETC	
	GTC	
	HSE	
	HTN	
	IDI	
	MOTA	
	NJS	
	SAR	
	SCN	
	SLD	
	SOD	
	SPE	
	♦SSI	
	SST	
	STR	
	UPI	
	WAB	
1N1195A	ASI	297 -157
	CEI	
	CEN	
	COO	
	EDL	
	ETC	
	GTC	
	HSE	
	HTN	
	IDC	
	IDI	
	♦MOTA	
	♦NAT	
	NJS	
	PRX	
	SAR	
	SCN	
	SOD	
	SPE	
	♦SSI	
	STR	
	THEF	
	UPI	
	WAB	
1N1196	Δ♦PRX	299 - 62
	ASI	
	CEI	
	CEN	
	COO	
	CRI	
	DII	
	EDL	
	ETC	
	GTC	
	HSE	
	HTN	
	IDI	
	MOTA	
	NJS	
	SAR	
	SCN	
	SLD	
	SOD	
	SPE	
	♦SSI	
	SST	
	STR	
	UPI	
	WAB	
1N1196A	ASI	297 -180
	CEI	
	CEN	
	COO	
	EDL	
	ETC	
	GTC	
	HSE	
	HTN	
	IDC	
	IDI	
	♦MOTA	
	♦NAT	
	NJS	
	PRX	
	SAR	
	SCN	
	SOD	
	SPE	
	♦SSI	
	STR	
	THEF	
	TIC	
	UPI	
	WAB	
1N1197	Δ♦PRX	299 - 92
	ASI	
	CEI	
	CEN	
	COO	
	CRI	
	DII	
	EDL	
	ETC	
	GTC	
	HSE	
	HTN	
	IDI	
	MOTA	
	NJS	
	SAR	
	SCN	
	SLD	
	SOD	
	SPE	
	♦SSI	
	SST	
	STR	
	UPI	
	WAB	
1N1197A	ASI	297 -190
	CEI	
	CEN	
	COO	
	EDL	
	ETC	
	GTC	
	HSE	
	HTN	
	IDC	
	IDI	
	♦MOTA	
	♦NAT	
	NJS	
	PRX	
	SAR	
	SCN	
	SOD	
	SPE	
	♦SSI	
	STR	
	THEF	
	WAB	
1N1198	Δ♦PRX	299 -126
	ASI	
	CEI	
	CEN	
	COO	
	CRI	
	DII	
	EDL	
	GTC	
	HSE	
	HTN	
	IDI	
	♦MOTA	
	NJS	
	SAR	
	SCN	
	SLD	
	SOD	
	SPE	
	♦SSI	
	SST	
	STR	
	UPI	
	WAB	
1N1198A	ASI	297 -207
	CEI	
	CEN	
	COO	
	EDL	
	GTC	
	HSE	
	HTN	
	IDC	
	IDI	
	MOTA	
	♦NAT	
	NJS	
	PRX	
	SAR	
	SCN	
	SOD	
	SPE	
	♦SSI	
	STR	
	THEF	
	WAB	
1N1199	ΔPRX	294 -185
	ASI	
	CEI	
	CEN	
	COO	
	CRI	
	♦DII	
	EDL	
	ETC	
	GTC	
	HTN	
	IDI	
	INRJ	
	♦MOTA	
	NJS	
	SAR	
	SCN	
	SPE	
	♦SSEI	
	SSI	
	TRWS	
	WAB	
1N1199A	ASI	252 -133
	CEI	
	CEN	
	COO	
	DII	
	EDL	
	ETC	
	GTC	
	HTN	
	IDC	
	IDI	
	INR	
	MAL	
	♦MOTA	
	NJS	
	♦PRX	
	SAR	
	SCN	
	SLCB	
	SOD	
	SPE	
	♦SSI	
	SST	
	TRWS	
	UPI	
	WAB	
1N1199B	CEI	294 -186
	CEN	
	DII	
	EDL	
	ETC	
	GTC	
	HTN	
	IDC	
	IDI	
	INRJ	
	♦MOTA	
	♦PRX	
	SAR	
	SCN	
	SOD	
	SPE	
	SSI	
	SST	
	TIC	
	TRWS	
	UPI	
	WAB	
1N1199C	Δ♦MOTA	294 -187
	SPE	
1N1200	Δ♦PRX	294 -215
	ASI	
	CEI	
	CEN	
	♦COO	
	CRI	
	♦DII	
	♦DIT	
	EDL	
	ETC	
	GTC	
	HTN	
	IDI	
	INRJ	
	♦MOTA	
	NJS	
	SAR	
	SCN	
	SPE	
	♦SSEI	
	SSI	
	STR	
	TRWS	
	UPI	
	WAB	
1N1200A	ASI	253 -104
	CDIL	
	CEI	
	CEN	
	♦COO	
	DII	
	♦DIT	
	EDL	
	ETC	
	GTC	
	HTN	
	IDC	
	IDI	
	INR	
	INRJ	
	MAL	
	♦MOTA	
	♦NAT	
	NJS	
	♦PRX	
	SAR	
	SCN	
	SLCB	
	SOD	
	SPE	
	♦SSEI	
	♦SSI	
	SST	
	STR	
	TIC	
	TRWS	
	UPI	
	WAB	
1N1200B	ASI	294 -216
	CEI	
	CEN	
	DII	
	EDL	
	ETC	
	GTC	
	HTN	
	IDC	
	IDI	
	INRJ	
	♦MOTA	
	♦PRX	
	SAR	
	SCN	
	SOD	
	SPE	
	SSI	
	STR	
	TRWS	
	UPI	
	WAB	
1N1200C	Δ♦MOTA	294 -217
	SPE	
1N1201	Δ♦PRX	295 - 12
	ASI	
	CEI	
	CEN	
	COO	
	♦DII	
	♦DIT	
	EDL	
	ETC	
	GTC	
	HTN	
	IDI	
	INRJ	
	♦MOTA	
	NJS	
	SAR	
	SCN	
	SPE	
	SSI	
	STR	
	TRWS	
	UPI	
	WAB	
1N1201A	ASI	254 - 13
	CDIL	
	CEI	
	CEN	
	COO	
	CRI	
	DII	
	♦DIT	
	EDL	
	ETC	
	GTC	
	HTN	
	IDC	
	IDI	
	INR	
	INRJ	
	MAL	
	♦MOTA	
	NJS	
	♦PRX	
	SAR	
	SCN	
	SLCB	
	SOD	
	SPE	
	♦SSI	
	SST	
	STR	
	TRWS	
	UPI	
	WAB	
1N1201B	ASI	295 - 13
	CEI	
	CEN	
	DII	
	EDL	
	ETC	
	GTC	
	HTN	
	IDC	
	IDI	
	INRJ	
	♦PRX	
	SAR	
	SCN	
	SOD	
	SPE	
	SSI	
	SST	
	STR	
	TRWS	
	WAB	
1N1201C	SPE	295 - 14
1N1202	Δ♦PRX	295 - 30
cont.next col.		
1N1202 (cont.)	ASI	
	CEI	
	CEN	
	♦COO	
	CRI	
	♦DII	
	♦DIT	
	EDL	
	ETC	
	GTC	
	HTN	
	IDI	
	INRJ	
	♦MOTA	
	NJS	
	SAR	
	SCN	
	SPE	
	♦SSEI	
	SSI	
	STR	
	TRWS	
	UPI	
	WAB	
1N1202A	ASI	254 -102
	CDIL	
	CEI	
	CEN	
	♦COO	
	DII	
	♦DIT	
	EDL	
	ETC	
	GTC	
	HTN	
	IDC	
	IDI	
	INR	
	INRJ	
	MAL	
	♦MOTA	
	♦NAT	
	NJS	
	♦PRX	
	SAR	
	SCN	
	SLCB	
	SOD	
	SPE	
	♦SSEI	
	♦SSI	
	SST	
	STR	
	TIC	
	TRWS	
	UPI	
	WAB	
1N1202B	ASI	295 - 31
	CEI	
	CEN	
	DII	
	EDL	
	ETC	
	GTC	
	HTN	
	IDC	
	IDI	
	INRJ	
	♦MOTA	
	♦PRX	
	SAR	
	SCN	
	SOD	
	SPE	
	SSI	
	SST	
	STR	
	TRWS	
	UPI	
	WAB	
1N1202C	Δ♦MOTA	295 - 32
	SPE	
1N1203	Δ♦PRX	295 - 55
	ASI	
	CEI	
	CEN	
	COO	
	CRI	
	♦DII	
	♦DIT	
	EDL	
	ETC	
	GTC	
	HTN	
	IDI	
	INRJ	
	♦MOTA	
	NJS	
	SAR	
	SCN	
	SPE	
	SSI	
	STR	
	TRWS	
	UPI	
	WAB	
1N1203A	ASI	254 -148
	CDIL	
	CEI	
	CEN	
	COO	
	DII	
	♦DIT	
	EDL	
	ETC	
	GTC	
	HTN	
	IDC	
	IDI	
	INR	
	INRJ	
	MAL	
	♦MOTA	
	♦NAT	
	NJS	
	♦PRX	
	SAR	
	SCN	
	♦SLCB	
	SOD	
	SPE	
	♦SSI	
	SST	
	STR	
	TRWS	
	UPI	
	WAB	
1N1203B	ASI	295 - 56
	CEI	
	CEN	
	DII	
	EDL	
	ETC	
	GTC	
	HTN	
	IDC	
	IDI	
	INRI	
	INRJ	
	♦PRX	
	SAR	
	SCN	
	SOD	
	SPE	
	SSI	
	SST	
	STR	
	TRWS	
	UPI	
	WAB	
1N1204	Δ♦PRX	295 - 83
	ASI	
	CEI	
	CEN	
	♦COO	
	CRI	
	♦DII	
	♦DIT	
	EDL	
	ETC	
	GTC	
	HTN	
	IDI	
	INRJ	
	♦MOTA	
	NJS	
	SAR	
	SCN	
	SPE	
	♦SSEI	
	SSI	
	SSY	
	STR	
	TRWS	
	UPI	
	WAB	
1N1204A	ASI	255 - 18
	CDIL	
	CEI	
	CEN	
	♦COO	
	DII	
	♦DIT	
	EDL	
	ETC	
	GTC	
	HTN	
	IDC	
	IDI	
	INR	
	INRJ	
	MAL	
	♦MOTA	
	♦NAT	
	NJS	
	♦PRX	
	SAR	
	SCN	
	♦SLCB	
	SOD	
	SPE	
cont.next col.		
1N1204A (cont.)	♦SSEI	
	♦SSI	
	SST	
	STR	
	TIC	
	TRWS	
	UPI	
	WAB	
1N1204B	ASI	295 - 84
	CEI	
	CEN	
	DII	
	EDL	
	ETC	
	GTC	
	HTN	
	IDC	
	IDI	
	INRJ	
	MOTA	
	♦PRX	
	SAR	
	SCN	
	SOD	
	SPE	
	SSI	
	SST	
	STR	
	TRWS	
	UPI	
	WAB	
1N1204C	Δ♦MOTA	295 - 85
	SPE	
1N1205	Δ♦PRX	295 -103
	ASI	
	CEI	
	CEN	
	COO	
	CRI	
	♦DII	
	DIT	
	EDL	
	ETC	
	GTC	
	HTN	
	IDI	
	INRJ	
	♦MOTA	
	NJS	
	SAR	
	SCN	
	SOD	
	SPE	
	SSI	
	STR	
	UPI	
	WAB	
1N1205A	ASI	255 - 60
	CDIL	
	CEI	
	CEN	
	COO	
	DII	
	EDL	
	ETC	
	GTC	
	HTN	
	IDC	
	IDI	
	INR	
	INRJ	
	MAL	
	♦MOTA	
	♦NAT	
	NJS	
	♦PRX	
	SAR	
	SCN	
	♦SLCB	
	SOD	
	SPE	
	♦SSI	
	SST	
	STR	
	TRWS	
	UPI	
	WAB	
1N1205B	ASI	295 -104
	CEI	
	CEN	
	DII	
	EDL	
	ETC	
	GTC	
	HTN	
	IDC	
	IDI	
	INRJ	
	♦PRX	
	SAR	
	SCN	
	SOD	
	SPE	
	SSI	
	STR	
	WAB	
1N1205C	SPE	295 -105
1N1206	Δ♦PRX	295 -130
	ASI	
	CEI	
	CEN	
	♦COO	
	CRI	
	♦DII	
	DIT	
	EDL	
	ETC	
	GTC	
	HTN	
	IDI	
	INRJ	
	♦MOTA	
	NJS	
	SAR	
	SCN	
	SOD	
	SPE	
	♦SSEI	
	SSI	
	STR	
	UPI	
	WAB	
1N1206A	ASI	255 -142
	CDIL	
	CEI	
	CEN	
	♦COO	
	DII	
	EDL	
	ETC	
	GTC	
	HTN	
	IDC	
	IDI	
	INR	
	INRJ	
	MAL	
	♦MOTA	
	♦NAT	
	NJS	
	♦PRX	
	SAR	
	SCN	
	♦SLCB	
	SOD	
	SPE	
	♦SSEI	
	♦SSI	
	SST	
	STR	
	TIC	
	WAB	
1N1206B	ASI	295 -131
	CEI	
	CEN	
	DII	
	EDL	
	ETC	
	GTC	
	HTN	
	IDC	
	IDI	
	INRJ	
	MOTA	
	♦PRX	
	SAR	
	SCN	
	SOD	
	SPE	
	SSI	
	SST	
	STR	
	WAB	
1N1206C	Δ♦MOTA	295 -132
	SPE	
1N1217	CEN	285 - 92
	CRI	
	ETC	
	HTN	
	SAR	
	SCN	
	SPE	
	UPI	
1N1217A	CEN	285 - 97
	ETC	
	HTN	
	SAR	
	SCN	
	SPE	
	UPI	
1N1217B	CEN	285 - 95
	ETC	
	HTN	
cont.next col.		
1N1217B (cont.)	SCN	
	SPE	
	UPI	
1N1218	CEN	285 -102
	CRI	
	ETC	
	HTN	
	SAR	
	SCN	
	SPE	
	UPI	
1N1218A	CEN	285 -107
	ETC	
	HTN	
	SAR	
	SCN	
	SPE	
	UPI	
1N1218B	CEN	285 -104
	ETC	
	HTN	
	SCN	
	SPE	
	UPI	
1N1219	CEN	285 -110
	CRI	
	ETC	
	HTN	
	SAR	
	SCN	
	SPE	
	UPI	
1N1219A	CEI	285 -115
	CEN	
	ETC	
	HTN	
	SAR	
	SCN	
	SPE	
	UPI	
1N1219B	CEI	285 -112
	CEN	
	ETC	
	HTN	
	SCN	
	SPE	
	UPI	
1N1220	CEN	285 -119
	ETC	
	HTN	
	SAR	
	SCN	
	SPE	
	UPI	
1N1220A	CEN	285 -124
	CRI	
	ETC	
	HTN	
	SAR	
	SCN	
	SPE	
	UPI	
1N1220B	CEN	285 -121
	ETC	
	HTN	
	SCN	
	SPE	
	UPI	
1N1221	CEI	285 -128
	CEN	
	CRI	
	ETC	
	HTN	
	SAR	
	SCN	
	SPE	
	UPI	
1N1221A	CEI	285 -133
	CEN	
	ETC	
	HTN	
	SAR	
	SCN	
	SPE	
	UPI	
1N1221B	CEI	285 -130
	CEN	
	ETC	
	HTN	
	SCN	
	SPE	
	UPI	
1N1222	CEN	285 -136
	CRI	
	ETC	
	HTN	
	SAR	
	SCN	
	SPE	
	UPI	
1N1222A	CEN	285 -141
	CRI	
	ETC	
	HTN	
	SAR	
	SCN	
	SPE	
	UPI	
1N1222B	CEN	285 -138
	ETC	
	HTN	
	SCN	
	SPE	
	UPI	
1N1223	CEN	285 -143
	CRI	
	ETC	
	HTN	
	SAR	
	SCN	
	SPE	
1N1223A	CEN	285 -148
	ETC	
	HTN	
	SAR	
	SCN	
	SPE	
1N1223B	CEN	285 -145
	ETC	
	HTN	
	SCN	
	SPE	
1N1224	CEN	285 -153
	CRI	
	ETC	
	HTN	
	SAR	
	SCN	
	SPE	
1N1224A	CEN	285 -158
	ETC	
	HTN	
	SAR	
	SCN	
	SPE	
1N1224B	ASI	285 -155
	CEN	
	ETC	
	HTN	
	SCN	
	SPE	
	WAB	
1N1225	CEN	285 -161
	CRI	
	ETC	
	HTN	
	SAR	
	SCN	
	SPE	
1N1225A	CEN	282 -140
	ETC	
	HTN	
	SCN	
	SPE	
1N1225B	CEN	285 -163
	ETC	
	HTN	
	SCN	
	SPE	
1N1226	CEN	285 -166
	ETC	
	HTN	
	SAR	
	SCN	
	SPE	
1N1226A	CEN	282 - 30
	ETC	
	HTN	
	SCN	
	SPE	
1N1226B	CEN	285 -168
	ETC	
	HTN	
	SCN	
	SPE	

Δ-Registered with JEDEC by this manufacturer

♦-Mfr's data sheet available in microfilm service

1. TYPE No. CROSS INDEX

IN TYPE NUMBER SEQUENCE

TYPE No.	MFRS	Pg&Line
1N1227	CEN	285 - 93
	CRI	
	SCN	
1N1227A	CEN	285 - 94
	CRI	
	SCN	
1N1227B	CEN	285 - 91
	EDL	
	SCN	
1N1228	CEN	285 -103
	CRI	
	HTN	
	SPE	
1N1228A	CEN	285 -105
	EDL	
	SCN	
1N1228B	CEN	285 -100
	EDL	
	SCN	
1N1229	CEN	285 -111
	CRI	
	HTN	
1N1229A	CEN	285 -113
	EDL	
	SCN	
1N1229B	CEN	285 -109
	EDL	
	SCN	
1N1230	CEN	285 -120
	CRI	
	HTN	
1N1230A	CEN	285 -122
	EDL	
	SCN	
1N1230B	CEN	285 -117
	EDL	
	SCN	
1N1231	CEN	285 -129
	CRI	
	HTN	
1N1231A	CEN	285 -131
	EDL	
	SCN	
1N1231B	CEN	285 -127
	EDL	
	SCN	
1N1232	CEN	285 -137
	CRI	
	HTN	
1N1232A	CEN	285 -139
	EDL	
	SCN	
1N1232B	CEN	285 -134
	EDL	
	SCN	
1N1233	CEN	285 -144
	CRI	
	HTN	
	SPE	
1N1233A	CEN	285 -146
	EDL	
	SCN	
1N1233B	CEN	285 -142
	EDL	
	SCN	
1N1234	CEN	285 -154
	EDL	
	SCN	
1N1234A	CEN	285 -156
	EDL	
	SCN	
1N1234B	CEN	285 -151
	EDL	
	SCN	
1N1235	CEN	285 -162
	CRI	
	HTN	
	SPE	
1N1235A	CEN	285 -159
	EDL	
	SCN	
1N1235B	CEN	285 -160
	EDL	
	SCN	
1N1236	CEN	285 -167
	CRI	
	HTN	
	SPE	
1N1236A	CEN	285 -164
	EDL	
	SCN	
1N1236B	CEN	285 -165
	EDL	
	SCN	
1N1237	ΔSAR	412 - 37
	AMX	
	CRI	
	EDL	

cont.next col.

TYPE No.	MFRS	Pg&Line
1N1237	INRJ	
(cont.)	SCN	
PDE	SPE	
SOD	UTX	
♦SSI	ΔSAR	412 - 38
1N1238	CEI	
AMX	EDI	
CRI	HTN	
EDL	PDE	
INRJ	SOD	
SCN	♦SSI	
SPE	UTX	
	ΔSAR	418 -162
1N1239	CEI	
AMX	EDI	
CRI	HTN	
EDL	PDE	
INRJ	SOD	
SCN	♦SSI	
SPE	UTX	
	CEN	276 -134
1N1251	ETC	
CRI	IDC	
HTN	SPE	
SCN	SSI	
	CEN	276 -146
1N1252	ETC	
CRI	IDC	
HTN	SPE	
SCN	SSI	
	CEN	276 -172
1N1253	ETC	
CRI	SCN	
HTN	SSI	
SPE	UPI	
	CEN	276 -197
1N1254	ETC	
CRI	SCN	
HTN	SSI	
SPE	CEN	276 -209
1N1255	ETC	
CRI	SCN	
HTN	SSI	
SPE	UPI	
	CEN	276 -210
1N1255A	SCN	
HTN	SSI	
SPE	UPI	
	CEN	276 - 40
1N1256	ETC	
CRI	SCN	
HTN	SSI	
SPE	CEN	276 - 31
1N1257	ETC	
CRI	SCN	
HTN	SSI	
SPE	CEN	275 -202
1N1258	ETC	
CRI	SCN	
HTN	SSI	
SPE	CEN	275 -201
1N1259	ETC	
CRI	SCN	
HTN	SSI	
SPE	CEN	275 -200
1N1260	ETC	
CRI	SCN	
HTN	SSI	
SPE	CEN	401 - 57
1N1261	ETC	
CRI	SCN	
HTN	SSI	
SPE	AMX	422 -201
1N1262	CRI	
CEI	EDL	
EDI	INRJ	
HTN	SCN	
PDE	SPE	
SOD	UTX	
SSI	ETC	308 - 60
1N1281	SPE	
HTN	SSI	
	ETC	308 - 67
1N1282	SPE	
HTN	SSI	
	ETC	308 - 71
1N1283	SPE	
HTN	SSI	
	ETC	308 - 76
1N1284	SPE	
HTN	SSI	
	ETC	308 - 84
1N1285	SPE	
HTN	SSI	
	ETC	308 - 93
1N1286	SPE	
HTN	SSI	
	HTN	308 -101
1N1287	SSI	
SPE	HTN	308 - 61
1N1291	SSI	
SPE	HTN	308 - 68
1N1292	SSI	
SPE	HTN	308 - 72
1N1293	SSI	
SPE	HTN	308 - 77
1N1294	SSI	
SPE	HTN	308 - 85
1N1295	SSI	
SPE	HTN	308 - 94
1N1296	SSI	
SPE	HTN	308 -102
1N1297	SSI	
SPE		

TYPE No.	MFRS	Pg&Line
1N1301	CEN	301 - 50
	COO	
	CRI	
	EDL	
	ETC	
	HTN	
	IDC	
	SCN	
	SOD	
	SPE	
	SSI	
	SST	
	WAB	
1N1302	CEN	301 - 53
	COO	
	CRI	
	EDL	
	ETC	
	HTN	
	IDC	
	SCN	
	SOD	
	SPE	
	SSI	
	SST	
	WAB	
1N1304	CEN	301 - 57
	COO	
	CRI	
	EDL	
	ETC	
	HTN	
	IDC	
	SCN	
	SOD	
	SPE	
	SSI	
	SST	
	WAB	
1N1306	CEN	301 - 60
	COO	
	CRI	
	EDL	
	ETC	
	HTN	
	IDC	
	SCN	
	SOD	
	SPE	
	SSI	
	SST	
	WAB	
1N1313	AMX	183 -190
	CODI	
	CRI	
	HTN	
	SCA	
	SCE	
	SPE	
	SSI	
	STI	
	TRWS	
1N1313A	AMX	183 -189
	CODI	
	HTN	
	SCA	
	SCE	
	SPE	
	SSI	
	STI	
	TRWS	
1N1314	AMX	188 -115
	CODI	
	CRI	
	HTN	
	IDC	
	SCA	
	SCE	
	SPE	
	SSI	
	STI	
	UPI	
1N1314A	AMX	188 -114
	CODI	
	HTN	
	IDC	
	SCA	
	SCE	
	SPE	
	SSI	
	STI	
	UPI	
1N1315	AMX	192 - 13
	CODI	
	CRI	
	HTN	
	SCA	
	SCE	
	SPE	
	SSI	
	STI	
1N1315A	AMX	192 - 12
	CODI	
	HTN	
	SCA	
	SCE	
	SPE	
	SSI	
	STI	
1N1316	AMX	195 -202
	CODI	
	CRI	
	HTN	
	SCA	
	SCE	
	SPE	
	SSI	
	STI	
1N1316A	AMX	195 -201
	CODI	
	HTN	
	SCA	
	SCE	
	SPE	
	SSI	
	STI	
1N1317	AMX	199 - 85
	CODI	
	CRI	
	HTN	
	SCA	
	SCE	
	SPE	
	SSI	
	STI	
1N1317A	AMX	199 - 84
	CODI	
	HTN	
	SCA	
	SCE	
	SPE	
	SSI	
	STI	
1N1318	AMX	203 - 14
	CRI	
	DIT	
	HTN	
	SCA	
	SCE	
	SPE	
	SSI	
	STI	
1N1318A	AMX	203 - 13
	DIT	
	HTN	
	SCA	
	SCE	
	SPE	
	SSI	
	STI	
1N1319	AMX	206 - 72
	CRI	
	HTN	
	SCA	
	SCE	
	SPE	
	SSI	
	STI	
1N1319A	AMX	206 - 71
	HTN	
	SCA	
	SCE	
	SPE	
	SSI	
	STI	
1N1320	AMX	209 - 50
	CRI	
	HTN	
	SCA	
	SCE	
	SPE	
	SSI	
	STI	
1N1320A	AMX	209 - 49
	HTN	
	SCA	
	SCE	
	SPE	
	SSI	
	STI	
1N1321	AMX	211 -137
	CRI	
	HTN	
	SCA	
	SCE	

cont.next col.

TYPE No.	MFRS	Pg&Line
1N1321	SPE	
(cont.)	STI	
SSI	AMX	211 -136
1N1321A	SCA	
HTN	SPE	
SCE	STI	
SSI	AMX	213 -144
1N1322	HTN	
CRI	SCE	
SCA	SSI	
SPE	STI	
	AMX	213 -143
1N1322A	SCA	
HTN	SPE	
SCE	STI	
SSI	AMX	215 -133
1N1323	HTN	
CRI	SCE	
SCA	SSI	
SPE	STI	
	AMX	215 -132
1N1323A	SCA	
HTN	SPE	
SCE	STI	
SSI	AMX	217 -125
1N1324	HTN	
CRI	SCE	
IDC	SSI	
SPE	STI	
	AMX	217 -123
1N1324A	IDC	
HTN	SPE	
SCE	STI	
SSI	AMX	219 - 87
1N1325	SCE	
HTN	SSI	
SPE	STI	
	AMX	219 - 72
1N1325A	SCE	
HTN	SSI	
SPE	STI	
	AMX	221 - 18
1N1326	HTN	
CRI	SPE	
SCE	STI	
SSI	AMX	221 - 16
1N1326A	SCE	
HTN	SSI	
SPE	STI	
	AMX	222 -126
1N1327	HTN	
CRI	SSI	
SPE	STI	
	AMX	222 -128
1N1327A	SPE	
HTN	STI	
SSI	CRI	309 - 36
1N1330	SPE	
HTN	SSI	
	CRI	309 - 41
1N1331	SPE	
HTN	SSI	
	CRI	309 - 44
1N1332	SPE	
HTN	SSI	
	CRI	309 - 51
1N1333	SSI	
HTN	HTN	309 - 55
1N1334	SSI	
SPE	CRI	309 - 62
1N1335	SPE	
HTN	SSI	
	HTN	309 - 67
1N1336	SSI	
SPE	Δ ♦PRX	291 -125
1N1341	CEI	
ASI	COO	
CEN	DII	
CRI	ETC	
EDL	HTN	
GTC	IDI	
IDC	SCN	
SAR	SPE	
SPE	♦SSEI	
SSI	UPI	
	WAB	
1N1341A	ASI	291 -126
CEI	CEN	
COO	DII	
EDL	ETC	
GTC	HTN	
IDC	IDI	
♦PRX	SAR	
SCN	SOD	
SPE	SSI	
SST	UPI	
	WAB	
1N1341B	ASI	291 -127
CEI	CEN	
COO	DII	
EDL	ETC	
GTC	HTN	
IDC	IDI	
MAL	PRX	
SCN	SOD	
SPE	♦SSEI	
SSI	THEF	
UPI	WAB	
1N1341C	SCN	291 - 99
	SPE	
1N1342	ΔPRX	291 -170
ASI	CEI	
CEN	COO	

cont.next col.

TYPE No.	MFRS	Pg&Line
1N1342	CRI	
(cont.)	DII	
	♦DIT	
	EDL	
	ETC	
	GTC	
	HTN	
	IDI	
	SAR	
	SCN	
	SPE	
	SSI	
	UPI	
	WAB	
1N1342A	ASI	291 -171
	CEI	
	CEN	
	COO	
	DII	
	♦DIT	
	EDL	
	ETC	
	GTC	
	HTN	
	IDC	
	IDI	
	♦PRX	
	SAR	
	SCN	
	SOD	
	SPE	
	SSI	
	SST	
	UPI	
	WAB	
1N1342B	ASI	291 -172
	CDIL	
	CEI	
	CEN	
	COO	
	DII	
	♦DIT	
	EDL	
	ETC	
	GTC	
	HTN	
	IDC	
	IDI	
	MAL	
	PRX	
	SCN	
	SOD	
	SPE	
	♦SSEI	
	SSI	
	SST	
	THEF	
	UPI	
	WAB	
1N1342C	SCN	291 -140
1N1343	ΔPRX	291 -188
	ASI	
	CEI	
	CEN	
	COO	
	CRI	
	DII	
	♦DIT	
	EDL	
	ETC	
	GTC	
	HTN	
	IDI	
	SAR	
	SCN	
	SPE	
	SSI	
	UPI	
	WAB	
1N1343A	ASI	291 -189
	CEI	
	CEN	
	COO	
	DII	
	♦DIT	
	EDL	
	ETC	
	GTC	
	HTN	
	IDC	
	IDI	
	♦PRX	
	SAR	
	SCN	
	SOD	
	SPE	
	SSI	
	SST	
	UPI	
	WAB	
1N1343B	ASI	291 -190
	CDIL	
	CEI	
	CEN	
	COO	
	DII	
	♦DIT	
	EDL	
	ETC	
	GTC	
	HTN	
	IDC	
	IDI	
	MAL	
	PRX	
	SCN	
	SOD	
	SPE	
	SSI	
	SST	
	UPI	
	WAB	
1N1343C	SCN	291 -182
	SPE	
1N1344	ΔPRX	291 -220
	ASI	
	CEI	
	CEN	
	COO	
	CRI	
	DII	
	EDL	
	ETC	
	GTC	
	HTN	
	IDI	
	SAR	
	SCN	
	SPE	
	♦SSEI	
	SSI	
	UPI	
	WAB	
1N1344A	ASI	292 - 1
	CEI	
	CEN	
	COO	
	DII	
	EDL	
	ETC	
	GTC	
	HTN	
	IDC	
	IDI	
	♦PRX	
	SAR	
	SCN	
	SOD	
	SPE	
	SSI	
	SST	
	UPI	
	WAB	
1N1344B	ASI	292 - 2
	CDIL	
	CEI	
	CEN	
	COO	
	DII	
	EDL	
	ETC	
	GTC	
	HTN	
	IDC	
	IDI	
	MAL	
	PRX	
	SCN	
	SOD	
	SPE	
	♦SSEI	
	SSI	
	SST	
	THEF	
	UPI	
	WAB	
1N1344C	SCN	291 -192
	SPE	
1N1345	ΔPRX	292 - 29
	ASI	
	CEI	
	CEN	
	COO	
	CRI	
	DII	
	EDL	
	ETC	
	GTC	
	HTN	
	IDI	
	SAR	
	SCN	
	SPE	
	SSI	
	UPI	
	WAB	

Δ-Registered with JEDEC by this manufacturer

♦-Mfr's data sheet available in microfilm service

1. TYPE No. CROSS INDEX

IN TYPE NUMBER SEQUENCE

TYPE No.	MFRS	Pg&Line
1N1345A	ASI	292 - 30
	CEI	
	COO	
	DII	
	EDL	
	ETC	
	GTC	
	HTN	
	IDC	
	IDI	
	♦PRX	
	SAR	
	SCN	
	SOD	
	SPE	
	SSI	
	SST	
	UPI	
	WAB	
1N1345B	ASI	292 - 31
	CDIL	
	CEI	
	CEN	
	♦COO	
	DII	
	EDL	
	ETC	
	GTC	
	HTN	
	IDI	
	MAL	
	PRX	
	SCN	
	SOD	
	SPE	
	SSI	
	SST	
	THEF	
	UPI	
	WAB	
1N1345C	SCN	292 - 11
	SPE	
1N1346	ΔPRX	292 - 68
	ASI	
	CEI	
	CEN	
	♦COO	
	CRI	
	DII	
	EDL	
	ETC	
	GTC	
	HTN	
	IDI	
	SAR	
	SCN	
	SPE	
	♦SSEI	
	SSI	
	UPI	
	WAB	
1N1346A	ASI	292 - 69
	CEI	
	CEN	
	♦COO	
	DII	
	EDL	
	ETC	
	GTC	
	HTN	
	IDC	
	IDI	
	♦PRX	
	SAR	
	SCN	
	SOD	
	SPE	
	SSI	
	SST	
	UPI	
	WAB	
1N1346B	ASI	292 - 70
	CDIL	
	CEI	
	CEN	
	COO	
	DII	
	EDL	
	ETC	
	GTC	
	HTN	
	IDC	
	IDI	
	MAL	
	PRX	
	SCN	
	SOD	
	SPE	
	♦SSEI	
	SSI	
	SST	
	THEF	
	UPI	
	WAB	
1N1346C	SCN	292 - 40
	SPE	
1N1347	ΔPRX	292 - 88
	ASI	
	CEI	
	CEN	
	COO	
	CRI	
	DII	
	EDL	
	ETC	
	GTC	
	HTN	
	IDI	
	SAR	
	SCN	
	SOD	
	SPE	
	SSI	
	UPI	
	WAB	
1N1347A	ASI	292 - 89
	CEI	
	CEN	
	COO	
	DII	
	EDL	
	ETC	
	GTC	
	HTN	
	IDC	
	IDI	
	♦PRX	
	SAR	
	SCN	
	SOD	
	SPE	
	SSI	
	SST	
	WAB	
1N1347B	ASI	292 - 90
	CDIL	
	CEI	
	CEN	
	COO	
	DII	
	EDL	
	ETC	
	GTC	
	HTN	
	IDC	
	IDI	
	MAL	
	PRX	
	SCN	
	SOD	
	SPE	
	SSI	
	SST	
	THEF	
	WAB	
1N1347C	SCN	292 - 78
	SPE	
1N1348	ΔPRX	292 -129
	ASI	
	CEI	
	CEN	
	♦COO	
	CRI	
	DII	
	EDL	
	ETC	
	GTC	
	HTN	
	IDI	
	SAR	
	SCN	
	SOD	
	SPE	
	♦SSEI	
	SSI	
	UPI	
	WAB	
1N1348A	ASI	292 -130
	CEI	
	CEN	
	♦COO	
	DII	
	EDL	
	ETC	
	GTC	
	HTN	
	IDC	
	IDI	
	♦PRX	
	SAR	
	SCN	
	SOD	
	SPE	
	SSI	
	SST	
	WAB	
1N1348B	ASI	292 -131
	CDIL	
	CEI	
	CEN	
	♦COO	
	DII	
	EDL	
	ETC	
	GTC	
	HTN	
	IDC	
	IDI	
	MAL	
	PRX	
	SCN	
	SOD	
	SPE	
	♦SSEI	
	SSI	
	SST	
	THEF	
	WAB	
1N1348C	SCN	292 - 97
	SPE	
1N1351	CEN	381 -122
	CRI	
	DII	
	ESP	
	ETC	
	♦GSE	
	HTN	
	IDC	
	MSC	
	SAR	
	SCE	
	SCN	
	SIEG	
	SPE	
	SSI	
1N1351A	CEN	381 -107
	DII	
	ESP	
	ETC	
	GSE	
	HTN	
	IDC	
	MSC	
	SAR	
	SCE	
	SCN	
	SPE	
	SSI	
1N1351B	IDC	381 -136
	SAR	
	SPE	
	SSI	
1N1352	CEN	382 - 12
	CRI	
	DII	
	ESP	
	ETC	
	♦GSE	
	HTN	
	IDC	
	MSC	
	SAR	
	SCE	
	SCN	
	SIEG	
	SPE	
	SSI	
1N1352A	CEN	382 - 1
	DII	
	ESP	
	ETC	
	GSE	
	HTN	
	IDC	
	MSC	
	SAR	
	SCE	
	SCN	
	SPE	
	SSI	
	UPI	
1N1352B	IDC	382 - 24
	SAR	
	SPE	
	SSI	
1N1353	CEN	382 -131
	CRI	
	DII	
	ESP	
	ETC	
	♦GSE	
	HTN	
	IDC	
	MSC	
	SAR	
	SCE	
	SCN	
	SIEG	
	SPE	
	SSI	
1N1353A	CEN	382 -115
	DII	
	ESP	
	ETC	
	GSE	
	HTN	
	IDC	
	MSC	
	SAR	
	SCE	
	SCN	
	SPE	
	SSI	
1N1353B	IDC	382 -146
	SAR	
	SPE	
	SSI	
1N1354	CEN	383 - 40
	DII	
	ESP	
	ETC	
	♦GSE	
	HTN	
	IDC	
	MSC	
	SAR	
	SCE	
	SCN	
	SIEG	
	SPE	
	SSI	
1N1354A	CEN	383 - 28
	DII	
	ESP	
	ETC	
	GSE	
	HTN	
	IDC	
	MSC	
	SAR	
	SCE	
	SCN	
	SPE	
	SSI	
1N1354B	IDC	383 - 53
	SAR	
	SPE	
	SSI	
1N1355	CEN	384 - 15
	CRI	
	DII	
	ESP	
	ETC	
	♦GSE	
	HTN	
	IDC	
	MSC	
	SAR	
	SCE	
	SCN	
	SIEG	
	SPE	
	SSI	
1N1355A	CEN	383 -196
	DII	
	ESP	
	ETC	
	GSE	
	HTN	
	IDC	
	MSC	
	SAR	
	SCE	
	SCN	
	SPE	
	SSI	
1N1355B	IDC	384 - 31
	SAR	
	SPE	
	SSI	
1N1356	CEN	384 -114
	CRI	
	DII	
	ESP	
	ETC	
	♦GSE	
	HTN	
	IDC	
	MSC	
	SAR	
	SCE	
	SCN	
	SIEG	
	SPE	
	SSI	
	UPI	
1N1356A	CEN	384 -101
	DII	
	ESP	
	ETC	
	GSE	
	HTN	
	IDC	
	MSC	
	SAR	
	SCE	
	SCN	
	SPE	
	SSI	
1N1356B	IDC	384 -128
	SAR	
	SPE	
	SSI	
1N1357	CEN	385 - 77
	CRI	
	DII	
	ESP	
	ETC	
	♦GSE	
	HTN	
	IDC	
	MSC	
	SAR	
	SCE	
	SCN	
	SIEG	
	SPE	
	SSI	
	WAB	
1N1357A	CEN	385 - 62
	DII	
	ESP	
	ETC	
	GSE	
	HTN	
	IDC	
	MSC	
	SAR	
	SCE	
	SCN	
	SPE	
	SSI	
1N1357B	IDC	385 - 94
	SAR	
	SPE	
	SSI	
1N1358	CEN	386 - 27
	CRI	
	DII	
	ESP	
	ETC	
	♦GSE	
	HTN	
	IDC	
	MSC	
	SAR	
	SCE	
	SCN	
	SIEG	
	SPE	
	SSI	
1N1358A	CEN	386 - 14
	DII	
	ESP	
	ETC	
	GSE	
	HTN	
	IDC	
	MSC	
	SAR	
	SCE	
	SCN	
	SPE	
	SSI	
	WAB	
1N1358B	SAR	386 - 41
	SPE	
	SSI	
1N1359	CEN	386 -132
	CRI	
	DII	
	ESP	
	ETC	
	♦GSE	
	HTN	
	IDC	
	MSC	
	SAR	
	SCE	
	SCN	
	SIEG	
	SPE	
	SSI	
1N1359A	CEN	386 -117
	DII	
	ESP	
	ETC	
	GSE	
	HTN	
	IDC	
	MSC	
	SAR	
	SCE	
	SCN	
	SPE	
	SSI	
1N1359B	IDC	386 -148
	SAR	
	SPE	
	SSI	
1N1360	CEN	387 - 49
	CRI	
	DII	
	ESP	
	ETC	
	♦GSE	
	HTN	
	IDC	
	MSC	
	SAR	
	SCE	
	SCN	
	SIEG	
	SPE	
	SSI	
1N1360A	CEN	387 - 36
	DII	
	ESP	
	ETC	
	GSE	
	HTN	
	IDC	
	MSC	
	SAR	
	SCE	
	SCN	
	SPE	
	SSI	
1N1360B	IDC	387 - 63
	SAR	
	SPE	
	SSI	
1N1361	CEN	387 -191
	CRI	
	DII	
	ESP	
	ETC	
	♦GSE	
	HTN	
	IDC	
	MSC	
	SAR	
	SCE	
	SCN	
	SIEG	
	SPE	
	SSI	
1N1361A	CEN	387 -175
	DII	
	ESP	
	ETC	
	GSE	
	HTN	
	IDC	
	MSC	
	SAR	
	SCE	
	SCN	
	SPE	
	SSI	
	UPI	
	WAB	
1N1361B	IDC	388 - 5
	SAR	
	SPE	
	SSI	
1N1362	CEN	388 -108
	CRI	
	DII	
	ESP	
	ETC	
	♦GSE	
	HTN	
	IDC	
	MSC	
	SAR	
	SCE	
	SCN	
	SIEG	
	SPE	
	SSI	
	TRWS	
1N1362A	CEN	388 - 94
cont.next col.		
1N1362A (cont.)	DII	
	ESP	
	ETC	
	GSE	
	HTN	
	IDC	
	MSC	
	SAR	
	SCE	
	SCN	
	SPE	
	SSI	
	TRWS	
1N1362B	IDC	388 -121
	SAR	
	SPE	
	SSI	
1N1363	CEN	389 - 15
	CRI	
	DII	
	ESP	
	ETC	
	♦GSE	
	HTN	
	IDC	
	MSC	
	SAR	
	SCE	
	SCN	
	SIEG	
	SPE	
	SSI	
	TRWS	
	UPI	
1N1363A	CEN	389 - 1
	DII	
	ESP	
	ETC	
	GSE	
	HTN	
	IDC	
	MSC	
	SAR	
	SCE	
	SCN	
	SPE	
	SSI	
	TRWS	
	WAB	
1N1363B	IDC	389 - 30
	SAR	
	SPE	
	SSI	
1N1364	CEN	389 -125
	CRI	
	DII	
	ESP	
	ETC	
	♦GSE	
	HTN	
	IDC	
	MSC	
	SAR	
	SCE	
	SCN	
	SIEG	
	SPE	
	SSI	
	TRWS	
1N1364A	CEN	389 -113
	DII	
	ESP	
	ETC	
	GSE	
	HTN	
	IDC	
	MSC	
	SAR	
	SCE	
	SCN	
	SPE	
	SSI	
	TRWS	
1N1364B	IDC	389 -139
	SAR	
	SPE	
	SSI	
1N1365	CEN	390 - 17
	CRI	
	DII	
	ESP	
	ETC	
	♦GSE	
	HTN	
	IDC	
	MSC	
	SAR	
	SCE	
	SCN	
	SIEG	
	SPE	
	SSI	
	TRWS	
1N1365A	CEN	390 - 5
	DII	
	ESP	
	ETC	
	GSE	
	HTN	
	IDC	
	MSC	
	SAR	
	SCE	
	SCN	
	SPE	
	SSI	
	TRWS	
1N1365B	IDC	390 - 31
	SAR	
	SPE	
	SSI	
1N1366	CEN	390 -125
	CRI	
	DII	
	ESP	
	ETC	
	♦GSE	
	HTN	
	IDC	
	MSC	
	SAR	
	SCE	
	SCN	
	SIEG	
	SPE	
	SSI	
	TRWS	
1N1366A	CEN	390 -114
	DII	
	ESP	
	ETC	
	GSE	
	HTN	
	IDC	
	MSC	
	SAR	
	SCE	
	SCN	
	SPE	
	SSI	
	TRWS	
1N1366B	IDC	390 -138
	SAR	
	SPE	
	SSI	
1N1367	CEN	391 - 59
	CRI	
	DII	
	ESP	
	ETC	
	♦GSE	
	HTN	
	IDC	
	MSC	
	SAR	
	SCE	
	SCN	
	SIEG	
	SPE	
	SSI	
	TRWS	
1N1367A	CEN	391 - 47
	DII	
	ESP	
	ETC	
	GSE	
	HTN	
	IDC	
	MSC	
	SAR	
	SCE	
	SCN	
	SPE	
	SSI	
1N1367B	IDC	391 - 73
	SAR	
	SPE	
	SSI	
1N1368	CEN	391 -195
	CRI	
	DII	
cont.next col.		
1N1368 (cont.)	ESP	
	ETC	
	♦GSE	
	HTN	
	IDC	
	MSC	
	SAR	
	SCE	
	SCN	
	SIEG	
	SPE	
	SSI	
	TRWS	
1N1368A	CEN	391 -184
	DII	
	ESP	
	ETC	
	GSE	
	HTN	
	IDC	
	MSC	
	SAR	
	SCE	
	SCN	
	SPE	
	SSI	
	TRWS	
1N1368B	IDC	392 - 4
	SAR	
	SPE	
	SSI	
1N1369	CEN	392 -116
	CRI	
	DII	
	ESP	
	ETC	
	♦GSE	
	HTN	
	IDC	
	MSC	
	SAR	
	SCE	
	SCN	
	SIEG	
	SSI	
1N1369A	CEN	392 -103
	DII	
	ESP	
	ETC	
	GSE	
	HTN	
	IDC	
	MSC	
	SAR	
	SCE	
	SCN	
	SIEG	
	SPE	
	SSI	
1N1369B	IDC	392 -131
	SAR	
	SPE	
	SSI	
1N1370	CEN	393 - 30
	CRI	
	DII	
	ESP	
	ETC	
	♦GSE	
	HTN	
	IDC	
	MSC	
	SAR	
	SCE	
	SCN	
	SIEG	
	SPE	
	SSI	
1N1370A	CEN	393 - 19
	DII	
	ESP	
	ETC	
	GSE	
	HTN	
	IDC	
	MSC	
	SAR	
	SCE	
	SCN	
	SIEG	
	SPE	
	SSI	
1N1370B	IDC	393 - 43
	SAR	
	SPE	
	SSI	
1N1371	CEN	393 -123
	CRI	
	DII	
	ESP	
	ETC	
	♦GSE	
	HTN	
	IDC	
	MSC	
	SAR	
	SCE	
	SCN	
	SIEG	
	SPE	
	SSI	
1N1371A	CEN	393 -110
	DII	
	ESP	
	ETC	
	GSE	
	HTN	
	IDC	
	MSC	
	SAR	
	SCE	
	SCN	
	SIEG	
	SPE	
	SSI	
1N1371B	IDC	393 -137
	SAR	
	SPE	
	SSI	
1N1372	CEN	394 - 44
	CRI	
	DII	
	ESP	
	ETC	
	♦GSE	
	HTN	
	IDC	
	MSC	
	SAR	
	SCE	
	SCN	
	SIEG	
	SPE	
	SSI	
1N1372A	CEN	394 - 32
	DII	
	ESP	
	ETC	
	GSE	
	HTN	
	IDC	
	MSC	
	SAR	
	SCE	
	SCN	
	SIEG	
	SPE	
	SSI	
1N1372B	IDC	394 - 58
	SAR	
	SPE	
	SSI	
1N1373	CEN	394 -150
	CRI	
	DII	
	ESP	
	ETC	
	♦GSE	
	HTN	
	IDC	
	MSC	
	SAR	
	SCE	
	SCN	
	SIEG	
	SPE	
	SSI	
1N1373A	CEN	394 -138
	DII	
	ESP	
	ETC	
	GSE	
	HTN	
	IDC	
	MSC	
	SAR	
	SCE	
	SCN	
	SPE	
	SSI	
1N1373B	IDC	394 -164
	SAR	
	SPE	
	SSI	
1N1374	CEN	395 - 59
	CRI	
	DII	
	ESP	
	ETC	
	♦GSE	
	HTN	
cont.next page		

Δ-Registered with JEDEC by this manufacturer

♦-Mfr's data sheet available in microfilm service

1. TYPE No. CROSS INDEX

IN TYPE NUMBER SEQUENCE

TYPE No.	MFRS	Pg&Line
1N1374 (cont.)	IDC	
	MSC	
	SAR	
	SCE	
	SCN	
	SIEG	
	SPE	
	SSI	
1N1374A	CEN	395 - 48
	DII	
	ESP	
	ETC	
	GSE	
	HTN	
	IDC	
	MSC	
	SAR	
	SCE	
	SCN	
	SPE	
	SSI	
1N1374B	IDC	395 - 72
	SAR	
	SPE	
	SSI	
1N1375	CEN	395 -167
	CRI	
	DII	
	ESP	
	ETC	
	♦GSE	
	HTN	
	IDC	
	MSC	
	SAR	
	SCE	
	SCN	
	SIEG	
	SPE	
	SSI	
1N1375A	CEN	395 -153
	DII	
	ESP	
	ETC	
	GSE	
	HTN	
	IDC	
	MSC	
	SAR	
	SCE	
	SCN	
	SPE	
	SSI	
1N1376	ETC	309 - 37
	SPE	
	SSI	
1N1377	ETC	309 - 42
	SPE	
	SSI	
1N1378	ETC	309 - 45
	SPE	
	SSI	
1N1379	ETC	309 - 52
	SPE	
	SSI	
1N1380	ETC	309 - 56
	SPE	
	SSI	
1N1381	ETC	309 - 63
	SPE	
	SSI	
1N1382	SPE	309 - 68
	SSI	
1N1396	CEN	304 - 24
	COO	
	CRI	
	EDL	
	NJS	
	SPE	
	SSI	
	WAB	
1N1397	CEN	304 - 46
	♦COO	
	EDL	
	NJS	
	SPE	
	SSI	
	WAB	
1N1398	CEN	304 - 55
	COO	
	EDL	
	SPE	
	SSI	
	WAB	
1N1399	CEN	304 - 81
	♦COO	
	CRI	
	EDL	
	SPE	
	SSI	
	WAB	
1N1400	ASI	304 - 96
	CEN	
	♦COO	
	CRI	
	EDL	
	SPE	
	SSI	
	WAB	
1N1401	CEN	304 -127
	♦COO	
	CRI	
	EDL	
	SPE	
	SSI	
	WAB	
1N1402	ASI	304 -139
	CEN	
	COO	
	CRI	
	EDL	
	SPE	
	SSI	
	WAB	
1N1403	ASI	304 -166
	CEN	
	♦COO	
	EDL	
	SPE	
	SSI	
	WAB	
1N1406	CEN	274 -185
	ETC	
	SCN	
	SPE	
	SSI	
1N1407	CEN	274 -186
	ETC	
	SCN	
	SPE	
	SSI	
	UPI	
1N1408	CEN	401 - 34
	ETC	
	SCN	
	SPE	
	SSI	
1N1409	♦CODI	405 -196
	SCN	
	SPE	
	SSI	
	UTX	
1N1410	♦CODI	411 - 3
	SCN	
	SPE	
	SSI	
	UTX	
1N1411	♦CODI	413 -195
	SCN	
	SPE	
	SSI	
	UTX	
1N1412	♦CODI	414 -207
	SCN	
	SPE	
	SSI	
	UTX	
1N1413	♦CODI	416 -208
	SCN	
	SPE	
	SSI	
	UTX	
1N1415	ASI	281 - 43
	IDC	
	SPE	
	SSI	
	UPI	
	WAB	
1N1416	CEN	380 - 81
	SPE	
	SSI	
1N1417	CEN	382 -116
	SPE	
	SSI	
1N1418	CEN	383 -197
	SPE	
	SSI	
1N1419	CEN	385 - 63
	SPE	
	SSI	
1N1420	CEN	386 -118
	IDC	
	SPE	
	SSI	
1N1421	CEN	387 -176
	SPE	
	SSI	
1N1422	CEN	393 -111
	SPE	
	SSI	
1N1423	CEN	395 -154
	SPE	
	SSI	
1N1424	CEN	397 -188
	SPE	
	SSI	
1N1425	CEN	182 - 70
	IDC	
	SPE	
	SSI	
1N1426	CEN	191 - 39
	SPE	
	SSI	
1N1427	CEN	195 - 77
	SPE	
	SSI	
1N1428	CEN	198 -150
	SPE	
	SSI	
1N1429	CEN	202 - 42
	SPE	
	SSI	
1N1430	CEN	205 - 78
	SPE	
	SSI	
1N1431	CEN	216 -196
	SPE	
	SSI	
1N1432	CEN	220 -103
	SPE	
	SSI	
1N1433	CEN	224 - 9
	SPE	
	SSI	
1N1434	ASI	300 - 14
	CEN	
	COO	
	EDL	
	ETC	
	SAR	
	SCN	
	SOD	
	SPE	
	SSI	
	WAB	
1N1435	ASI	300 - 42
	CEN	
	COO	
	EDL	
	ETC	
	SAR	
	SCN	
	SOD	
	SPE	
	SSI	
	WAB	
1N1436	ASI	300 - 75
	CEN	
	COO	
	EDL	
	ETC	
	SAR	
	SCN	
	SOD	
	SPE	
	SSI	
	WAB	
1N1437	ASI	300 -114
	CEN	
	COO	
	EDL	
	ETC	
	SAR	
	SCN	
	SOD	
	SPE	
	SSI	
	WAB	
1N1438	ASI	300 -141
	CEN	
	COO	
	EDL	
	SAR	
	SCN	
	SOD	
	SPE	
	SSI	
	WAB	
1N1440	ETC	278 - 71
	SPE	
1N1441	ETC	278 -112
	IDC	
	SPE	
	UPI	
1N1443	CEN	402 - 87
	ETC	
	IDC	
	SCN	
	SPE	
	SSI	
1N1443A	CEN	401 -148
	ETC	
	SCN	
	SPE	
	SSI	
1N1443B	CEN	402 - 88
	SCN	
	SPE	
1N1444	CEN	402 - 89
	SCN	
	SPE	
	SSI	
1N1444A	CEN	402 - 85
	SCN	
	SPE	
	SSI	
1N1444B	CEN	402 - 86
	SCN	
	SPE	
	SSI	
1N1446	SCN	283 -176
	SPE	
1N1447	SCN	284 - 24
	SPE	
1N1448	SCN	284 - 64
	SPE	
1N1449	SCN	284 -131
	SPE	
1N1450	SCN	283 -173
	SPE	
1N1451	SCN	284 - 21
	SPE	
1N1452	SCN	284 - 62
	SPE	
1N1453	SCN	284 -128
	SPE	
1N1454	SPE	298 -134
	SSI	
1N1455	SPE	298 -173
	SSI	
1N1456	SPE	299 - 4
	SSI	
1N1457	SPE	299 - 28
	SSI	
1N1458	SPE	300 -205
	SSI	
1N1459	SPE	300 -217
	SSI	
1N1460	SPE	301 - 7
	SSI	
1N1461	SPE	301 - 14
	SSI	
1N1462	SPE	302 -133
	SSI	
1N1463	SPE	302 -153
	SSI	
1N1464	SPE	302 -178
	SSI	
1N1465	SPE	302 -188
	SSI	
1N1466	SPE	305 - 9
	SSI	
1N1467	SPE	305 - 14
	SSI	
1N1468	SPE	305 - 18
	SSI	
1N1469	SPE	305 - 19
	SSI	
1N1470	SPE	305 -189
	SSI	
1N1471	SPE	305 -204
	SSI	
1N1472	SPE	306 - 12
	SSI	
1N1473	SPE	306 - 29
	SSI	
1N1474	SPE	307 - 53
	SSI	
1N1475	SPE	307 - 82
	SSI	
1N1476	SPE	307 -119
	SSI	
1N1477	SPE	307 -146
	SSI	
1N1478	SPE	308 -155
	SSI	
1N1479	SPE	310 -199
	SSI	
1N1480	SPE	301 -161
	SSI	
1N1481	SPE	310 -220
	SSI	
1N1482	SPE	378 - 20
	SSI	
1N1483	IDC	378 -161
	SPE	
	SSI	
1N1484	IDC	170 - 88
	SPE	
	SSI	
1N1485	IDC	175 -115
	SPE	
	SSI	
1N1486	CEN	279 - 64
	CRI	
	ETC	
	SCN	
	SPE	
	SSI	
1N1487	CEI	278 - 1
	CEN	
	CRI	
	ETC	
	HTN	
	IDC	
	IDI	
	MAL	
	SAR	
	SCN	
	SLD	
	SPE	
	SST	
	SSY	
1N1488	ASI	278 - 37
	CEI	
	CEN	
	CRI	
	ETC	
	HTN	
	IDC	
	IDI	
	MAL	
	SAR	
	SCN	
	SLD	
	SPE	
	SST	
	UPI	
	WAB	
1N1489	CEI	278 - 87
	CEN	
	CRI	
	ETC	
	HTN	
	IDC	
	IDI	
	MAL	
	SAR	
	SCN	
	SLD	
	SPE	
	SST	
	UPI	
1N1490	CEI	278 -118
	CEN	
	CRI	
	ETC	
	HTN	
	IDC	
	IDI	
	MAL	
	SAR	
	SCN	
	SLD	
	SPE	
	SST	
	UPI	
1N1491	CEI	278 -162
	CEN	
	CRI	
	ETC	
	HTN	
	IDC	
	IDI	
	MAL	
	SAR	
	SCN	
	SLD	
	SPE	
	SST	
1N1492	CEI	278 -191
	CEN	
	CRI	
	ETC	
	HTN	
	IDC	
	IDI	
	MAL	
	SAR	
	SCN	
	SLD	
	SPE	
	SST	
1N1507	CEN	168 - 7
	CRI	
	DII	
	DIT	♦GSE
	HTN	
	IDC	
	SCN	
	SPE	
	SSI	
	TRWS	
1N1507A	CEN	168 - 2
	DII	
	GSE	
cont.next col.		
1N1507A (cont.)	HTN	
	IDC	
	SCN	
	SPE	
	SSI	
	TRWS	
	UPI	
1N1508	CEN	170 - 79
	CRI	
	DII	
	DIT	♦GSE
	HTN	
	IDC	
	SCN	
	SPE	
	SSI	
	TRWS	
1N1508A	CEN	170 - 74
	DII	
	GSE	
	HTN	
	IDC	
	SCN	
	SPE	
	SSI	
	TRWS	
	UPI	
1N1509	CEN	173 - 41
	DII	
	DIT	
	♦GSE	
	HTN	
	IDC	
	SAR	
	SCN	
	SPE	
	SSI	
	TRWS	
1N1509A	CEN	173 - 34
	DII	
	GSE	
	HTN	
	IDC	
	SAR	
	SCN	
	SPE	
	SSI	
	TRWS	
1N1510	CEN	178 - 78
	CRI	
	DII	
	DIT	♦GSE
	HTN	
	IDC	
	SAR	
	SCN	
	SPE	
	SSI	
	TRWS	
1N1510A	CEN	178 - 70
	DII	
	GSE	
	HTN	
	IDC	
	SAR	
	SCN	
	SPE	
	SSI	
	TRWS	
1N1511	CEN	182 - 56
	CRI	
	DII	
	DIT	♦GSE
	HTN	
	IDC	
	SAR	
	SCN	
	SPE	
	SSI	
	TRWS	
1N1511A	CEN	182 - 48
	DII	
	GSE	
	HTN	
	IDC	
	SAR	
	SCN	
	SPE	
	SSI	
	TRWS	
1N1512	CEN	187 -141
	CRI	
	DII	
	DIT	♦GSE
	HTN	
	IDC	
	SAR	
	SCN	
	SPE	
	SSI	
	TRWS	
1N1512A	CEN	187 -132
	DII	
	GSE	
	HTN	
	IDC	
	SAR	
	SCN	
	SPE	
	SSI	
	TRWS	
1N1513	CEN	191 - 27
	CRI	
	DII	
	DIT	♦GSE
	HTN	
	IDC	
	SAR	
	SCN	
	SPE	
	SSI	
	TRWS	
1N1513A	CEN	191 - 20
	DII	
	GSE	
	HTN	
	IDC	
	SAR	
	SCN	
	SPE	
	SSI	
	TRWS	
1N1514	CEN	195 - 29
	CRI	
	DII	
	DIT	♦GSE
	HTN	
	IDC	
	SAR	
	SCN	
	SPE	
	SSI	
	TRWS	
1N1514A	CEN	195 - 24
	DII	
	GSE	
	HTN	
	IDC	
	SAR	
	SCN	
	SPE	
	SSI	
	TRWS	
1N1515	CEN	198 -139
	CRI	
	DII	
	DIT	♦GSE
	HTN	
	IDC	
	SAR	
	SCN	
	SPE	
	SSI	
	TRWS	
1N1515A	CEN	198 -134
	DII	
	GSE	
	HTN	
	IDC	
	SAR	
	SCN	
	SPE	
	SSI	
	TRWS	
1N1516	CEN	202 - 32
	CRI	
	DII	
	DIT	♦GSE
	HTN	
	IDC	
	SAR	
	SCN	
	SPE	
	SSI	
	TRWS	
1N1516A	CEN	202 - 27
	DII	
	GSE	
	HTN	
	IDC	
	SAR	
	SCN	
	SPE	
	SSI	
	TRWS	
1N1517	CEN	205 - 69
	CRI	
	DII	
	DIT	♦GSE
	HTN	
	IDC	
	SAR	
	SCN	
	SPE	
	SSI	
	TRWS	
1N1517A	CEN	205 - 65
	DII	
	GSE	
	HTN	
	IDC	
	SAR	
	SCN	
	SPE	
	SSI	
	TRWS	
1N1518	CEN	168 - 30
	CRI	
	DII	
	DIT	♦GSE
	HTN	
	IDC	
	SCE	
	SCN	
	SPE	
	SSI	
	TRWS	
1N1518A	CEN	168 - 14
	DII	
	GSE	
	HTN	
	IDC	
	SCE	
	SCN	
	SPE	
	SSI	
	TRWS	
1N1519	CEN	170 -106
	CRI	
	DII	
	♦GSE	
	HTN	
	IDC	
	SCE	
	SCN	
	SSI	
	TRWS	
1N1519A	CEN	170 - 89
	DII	
	GSE	
	HTN	
	IDC	
	SCE	
	SCN	
	SPE	
	SSI	
	TRWS	
1N1520	CEN	173 - 74
	CRI	
	DII	
	♦GSE	
	HTN	
	IDC	
	SAR	
	SCE	
	SCN	
	SPE	
	SSI	
	TRWS	
1N1520A	CEN	173 - 53
	DII	
	GSE	
	HTN	
	IDC	
	SAR	
	SCE	
	SCN	
	SPE	
	SSI	
	TRWS	
1N1521	CEN	178 -126
	CRI	
	DII	
	♦GSE	
	HTN	
	IDC	
	SAR	
	SCE	
	SCN	
	SPE	
	SSI	
	TRWS	
1N1521A	CEN	178 - 93
	DII	
	GSE	
	HTN	
	IDC	
	SAR	
	SCE	
	SCN	
	SPE	
	SSI	
	TRWS	
1N1522	CEN	182 -106
	CRI	
	DII	
	♦GSE	
	HTN	
	IDC	
	SAR	
	SCE	
	SCN	
	SPE	
	SSI	
	TRWS	
1N1522A	CEN	182 - 71
	DII	
	GSE	
	HTN	
	IDC	
	SAR	
	SCE	
	SCN	
	SPE	
	SSI	
	TRWS	
1N1523	CEN	187 -200
	CRI	
	DII	
	♦GSE	
	HTN	
	IDC	
	SAR	
	SCE	
	SCN	
	SPE	
	SSI	
	TRWS	
1N1523A	CEN	187 -159
	DII	
	GSE	
	HTN	
	IDC	
	SAR	
	SCE	
	SCN	
	SPE	
	SSI	
	TRWS	
	WAB	
1N1524	CEN	191 - 79
	CRI	
	DII	
	♦GSE	
	HTN	
	IDC	
	SAR	
	SCE	
	SCN	
	SPE	
	SSI	
	TRWS	
1N1524A	CEN	191 - 40
	DII	
	GSE	
	HTN	
	IDC	
	SAR	
	SCE	
	SCN	
	SPE	
	SSI	
	TRWS	
	WAB	
1N1525	CEN	195 - 78
	CRI	
	DII	
	♦GSE	
	HTN	
cont.next page		

Δ-Registered with JEDEC by this manufacturer

♦-Mfr's data sheet available in microfilm service

1. TYPE No. CROSS INDEX

IN TYPE NUMBER SEQUENCE

TYPE No.	MFRS	Pg&Line
1N1525 (cont.)	IDC	
	SAR	
	SCE	
	SCN	
	SSI	
	TRWS	
1N1525A	CEN	195 - 40
	DII	
	GSE	
	HTN	
	IDC	
	SAR	
	SCE	
	SCN	
	SSI	
	TRWS	
1N1526	CEN	198 -186
	CRI	
	DII	
	♦GSE	
	HTN	
	IDC	
	SAR	
	SCE	
	SCN	
	SPE	
	SSI	
	TRWS	
1N1526A	CEN	198 -151
	DII	
	GSE	
	HTN	
	IDC	
	SAR	
	SCE	
	SCN	
	SSI	
	TRWS	
1N1527	CEN	202 - 78
	CRI	
	DII	
	♦GSE	
	HTN	
	IDC	
	SAR	
	SCE	
	SCN	
	SPE	
	SSI	
	TRWS	
1N1527A	CEN	202 - 43
	DII	
	GSE	
	HTN	
	IDC	
	SAR	
	SCE	
	SCN	
	SPE	
	SSI	
	TRWS	
1N1528	CEN	205 -115
	CRI	
	DII	
	♦GSE	
	HTN	
	IDC	
	SAR	
	SCE	
	SCN	
	SPE	
	SSI	
	TRWS	
1N1528A	CEN	205 - 79
	DII	
	GSE	
	HTN	
	IDC	
	SAR	
	SCE	
	SCN	
	SPE	
	SSI	
	TRWS	
1N1530	♦GSE	183 - 30
	SPE	
	SSI	
	STI	
	TRWS	
1N1530A	♦GSE	183 - 31
	SPE	
	SSI	
	STI	
	TIC	
	TRWS	
1N1537	ASI	285 - 96
	CEN	
	CRI	
	DII	
	ETC	
	HTN	
	IDC	
	♦MAL	
	SAR	
	SCN	
	SOD	
	SPE	
	SSI	
	UPI	
1N1538	ASI	285 -106
	CEN	
	CRI	
	DII	
	ETC	
	HTN	
	IDC	
	♦MAL	
	SAR	
	SCN	
	SPE	
	SSI	
	UPI	
	WAB	
1N1539	ASI	285 -114
	CEN	
	CRI	
	DII	
	ETC	
	HTN	
	♦MAL	
	SAR	
	SCN	
	SOD	
	SPE	
	SSI	
	UPI	
1N1540	ASI	285 -123
	CEN	
	CRI	
	DII	
	ETC	
	HTN	
	IDC	
	♦MAL	
	SAR	
	SCN	
	SOD	
	SPE	
	SSI	
	UPI	
1N1541	ASI	285 -132
	CEN	
	CRI	
	DII	
	ETC	
	HTN	
	♦MAL	
	SAR	
	SCN	
	SOD	
	SPE	
	SSI	
	UPI	
1N1542	ASI	285 -140
	CEN	
	CRI	
	DII	
	ETC	
	HTN	
	♦MAL	
	SAR	
	SCN	
	SOD	
	SPE	
	SSI	
	UPI	
1N1543	ASI	285 -147
	CEN	
	CRI	
	DII	
	ETC	
	HTN	
	♦MAL	
	SAR	
	SCN	
	SOD	
	SPE	
	SSI	
1N1544	ASI	285 -157
	CEN	
	CRI	
	DII	
	ETC	
	HTN	
	♦MAL	
cont.next col.		

TYPE No.	MFRS	Pg&Line
1N1544 (cont.)	SAR	
	SCN	
	SOD	
	SPE	
	SSI	
	UPI	
1N1551	ASI	280 -111
	CEN	
	ETC	
	HTN	
	IDC	
	SCN	
	SOD	
	SPE	
	SSI	
	UPI	
1N1552	ASI	280 -209
	CEN	
	ETC	
	HTN	
	IDC	
	SCN	
	SOD	
	SPE	
	SSI	
	UPI	
1N1553	ASI	281 - 26
	CEN	
	ETC	
	HTN	
	IDC	
	SCN	
	SOD	
	SPE	
	SSI	
	UPI	
1N1554	ASI	281 -114
	CEN	
	ETC	
	HTN	
	IDC	
	SCN	
	SOD	
	SPE	
	SSI	
	UPI	
1N1555	ASI	281 -148
	CEN	
	CRI	
	ETC	
	HTN	
	IDC	
	SCN	
	SOD	
	SPE	
	SSI	
	UPI	
1N1556	CEI	278 - 33
	CEN	
	CRI	
	ETC	
	HTN	
	SCN	
	SPE	
	UPI	
1N1557	CEI	278 - 81
	CEN	
	CRI	
	ETC	
	HTN	
	IDC	
	SCN	
	SPE	
	UPI	
1N1558	CEN	278 -116
	ETC	
	HTN	
	SCN	
	SPE	
	UPI	
1N1559	CEI	278 -161
	CEN	
	ETC	
	HTN	
	SCN	
	SPE	
	UPI	
1N1560	CEI	278 -190
	CEN	
	ETC	
	HTN	
	IDC	
	SCN	
	SPE	
1N1563	SPE	283 -148
	SSI	
	UTX	
1N1563A	SPE	283 -149
	UPI	
	UTX	
1N1564	SPE	283 -213
	SSI	
	UTX	
1N1564A	SPE	283 -214
	UTX	
1N1565	SPE	284 - 47
	SSI	
	UTX	
1N1565A	SPE	284 - 48
	UTX	
1N1566	SPE	284 -100
	SSI	
	UTX	
1N1566A	SPE	284 -101
	UTX	
1N1567	SPE	284 -152
	SSI	
1N1568	SPE	284 -202
	SSI	
1N1575	SPE	289 -177
	UTX	
1N1576	SPE	289 -183
	UTX	
1N1577	SPE	289 -189
	UTX	
1N1578	SPE	289 -192
	UTX	
1N1581	ASI	287 -207
	CEI	
	CEN	
	COO	
	CRI	
	DII	
	EDL	
	ETC	
	GTC	
	HTN	
	IDC	
	IDI	
	PRX	
	SAR	
	SCN	
	SLD	
	SOD	
	SPE	
	♦SSEI	
	SSI	
	SST	
	THEF	
	UPI	
	WAB	
1N1582	ASI	288 - 51
	CDIL	
	CEI	
	CEN	
	COO	
	CRI	
	DII	
	EDL	
	ETC	
	GTC	
	HTN	
	IDC	
	IDI	
	PRX	
	SAR	
	SCN	
	SLD	
	SOD	
	SPE	
	♦SSEI	
	SSI	
	SST	
	THEF	
	UPI	
	WAB	
1N1583	ASI	288 -134
	CDIL	
	CEI	
	CEN	
	COO	
cont.next col.		

TYPE No.	MFRS	Pg&Line
1N1583 (cont.)	CRI	
	DII	
	EDL	
	ETC	
	GTC	
	HTN	
	IDI	
	PRX	
	SAR	
	SCN	
	SLD	
	SOD	
	SPE	
	♦SSEI	
	SSI	
	SST	
	THEF	
	UPI	
	WAB	
1N1584	ASI	288 -163
	CDIL	
	CEI	
	CEN	
	COO	
	CRI	
	DII	
	EDL	
	ETC	
	GTC	
	HTN	
	IDI	
	PRX	
	SAR	
	SCN	
	SLD	
	SOD	
	SPE	
	SSI	
	SST	
	THEF	
	UPI	
	WAB	
1N1585	ASI	289 - 11
	CDIL	
	CEI	
	CEN	
	COO	
	CRI	
	DII	
	EDL	
	ETC	
	GTC	
	HTN	
	IDC	
	IDI	
	PRX	
	SAR	
	SCN	
	SLD	
	SOD	
	SPE	
	♦SSEI	
	SSI	
	SST	
	THEF	
	UPI	
	WAB	
1N1586	ASI	289 - 29
	CDIL	
	CEI	
	CEN	
	COO	
	CRI	
	DII	
	EDL	
	ETC	
	GTC	
	HTN	
	IDC	
	IDI	
	PRX	
	SAR	
	SCN	
	SLD	
	SOD	
	SSI	
	SST	
	THEF	
	WAB	
1N1587	ASI	289 - 93
	CDIL	
	CEI	
	CEN	
	♦COO	
	DII	
	EDL	
	ETC	
	GTC	
	HTN	
	IDC	
	IDI	
	PRX	
	SAR	
	SCN	
	SLD	
	SOD	
	SPE	
	♦SSEI	
	SSI	
	SST	
	THEF	
	WAB	
1N1588	CEN	168 - 75
	CRI	
	DII	
	♦GSE	
	HTN	
	IDC	
	SCE	
	SCN	
	SIEG	
	SPE	
	SSI	
	WAB	
1N1588A	CEN	168 - 74
	DII	
	GSE	
	HTN	
	IDC	
	SCE	
	SCN	
	SPE	
	SSI	
1N1589	CEN	170 -152
	CRI	
	DII	
	♦GSE	
	HTN	
	IDC	
	SCE	
	SCN	
	SIEG	
	SPE	
	SSI	
1N1589A	CEN	170 -151
	DII	
	GSE	
	HTN	
	IDC	
	SCE	
	SCN	
	SPE	
	SSI	
1N1590	CEN	173 -124
	CRI	
	DII	
	♦GSE	
	HTN	
	IDC	
	SCE	
	SCN	
	SIEG	
	SPE	
	SSI	
1N1590A	CEN	173 -123
	DII	
	GSE	
	HTN	
	IDC	
	SCE	
	SCN	
	SPE	
	SSI	
1N1591	CEN	178 -201
	CRI	
	DII	
	♦GSE	
	HTN	
	IDC	
	MSC	
	SCE	
	SCN	
	SIEG	
	SPE	
	SSI	
	WAB	
1N1591A	CEN	178 -200
	DII	
	GSE	
	HTN	
	IDC	
	MSC	
	SAR	
	SCE	
	SCN	
	SPE	
	SSI	
1N1592	CEN	182 -185
	CRI	
	DII	
	♦GSE	
	HTN	
	IDC	
	INRJ	
	MSC	
	SAR	
cont.next col.		

TYPE No.	MFRS	Pg&Line
1N1592 (cont.)	SCE	
	SCN	
	SIEG	
	SPE	
	SSI	
1N1592A	CEN	182 -184
	DII	
	GSE	
	HTN	
	IDC	
	INRJ	
	SAR	
	SCE	
	SCN	
	SPE	
	SSI	
	WAB	
1N1593	CEN	188 - 86
	CRI	
	DII	
	♦GSE	
	HTN	
	IDC	
	SAR	
	SCE	
	SCN	
	SIEG	
	SPE	
	SSI	
	UPI	
	WAB	
1N1593A	CEN	188 - 85
	DII	
	GSE	
	HTN	
	IDC	
	SAR	
	SCE	
	SCN	
	SPE	
	SSI	
	WAB	
1N1594	CEN	191 -174
	CRI	
	DII	
	♦GSE	
	HTN	
	IDC	
	MSC	
	SAR	
	SCE	
	SCN	
	SIEG	
	SPE	
	SSI	
	WAB	
1N1594A	CEN	191 -173
	DII	
	GSE	
	HTN	
	IDC	
	MSC	
	SAR	
	SCE	
	SCN	
	SPE	
	SSI	
	UPI	
	WAB	
1N1595	CEN	195 -170
	CRI	
	DII	
	♦GSE	
	HTN	
	IDC	
	MSC	
	SAR	
	SCE	
	SCN	
	SPE	
	SSI	
	WAB	
1N1595A	CEN	195 -169
	DII	
	GSE	
	HTN	
	IDC	
	SAR	
	SCE	
	SCN	
	SPE	
	SSI	
	WAB	
1N1596	CEN	199 - 70
	CRI	
	DII	
	♦GSE	
	HTN	
	IDC	
	SAR	
	SCE	
	SCN	
	SIEG	
	SPE	
	SSI	
1N1596A	CEN	199 - 69
	DII	
	GSE	
	HTN	
	IDC	
	SAR	
	SCE	
	SCN	
	SPE	
	SSI	
	UPI	
1N1597	CEN	202 -167
	CRI	
	DII	
	♦GSE	
	HTN	
	IDC	
	MSC	
	SAR	
	SCE	
	SCN	
	SIEG	
	SPE	
	SSI	
1N1597A	CEN	202 -166
	DII	
	GSE	
	HTN	
	IDC	
	MSC	
	SAR	
	SCE	
	SCN	
	SPE	
	SSI	
	WAB	
1N1598	CEN	206 - 5
	CRI	
	DII	
	♦GSE	
	HTN	
	IDC	
	SAR	
	SCE	
	SCN	
	SIEG	
	SPE	
	SSI	
	WAB	
1N1598A	CEN	206 - 4
	DII	
	GSE	
	HTN	
	IDC	
	SAR	
	SCE	
	SCN	
	SPE	
	SSI	
	WAB	
1N1599	CEN	377 -104
	CRI	
	DII	
	♦GSE	
	HTN	
	IDC	
	MSC	
	SCE	
	SCN	
	SIEG	
	SPE	
	SSI	
1N1599A	CEN	377 -100
	DII	
	GSE	
	HTN	
	IDC	
	MSC	
	SCE	
	SCN	
	SPE	
	SSI	
1N1600	CEN	378 - 25
	CRI	
	♦GSE	
	HTN	
	IDC	
	MSC	
	SCE	
	SCN	
	SIEG	
	SPE	
	SSI	
1N1600A	CEN	378 - 21
cont.next col.		

TYPE No.	MFRS	Pg&Line
1N1600A (cont.)	GSE	
	HTN	
	IDC	
	MSC	
	SCE	
	SCN	
	SPE	
	SSI	
1N1601	CEN	378 -113
	CRI	
	DII	
	♦GSE	
	HTN	
	IDC	
	MSC	
	SCE	
	SCN	
	SIEG	
	SPE	
	SSI	
	WAB	
1N1601A	CEN	378 -108
	DII	
	GSE	
	HTN	
	IDC	
	MSC	
	SCE	
	SCN	
	SPE	
	SSI	
1N1602	CEN	379 - 54
	CRI	
	DII	
	♦GSE	
	HTN	
	IDC	
	MSC	
	SAR	
	SCE	
	SCN	
	SIEG	
	SPE	
	SSI	
	TRWS	
	WAB	
1N1602A	CEN	379 - 42
	DII	
	GSE	
	HTN	
	IDC	
	MSC	
	SAR	
	SCE	
	SCN	
	SPE	
	SSI	
	TRWS	
	WAB	
1N1603	CEN	380 - 94
	CRI	
	DII	
	♦GSE	
	HTN	
	IDC	
	MSC	
	SAR	
	SCE	
	SCN	
	SIEG	
	SPE	
	SSI	
	TRWS	
1N1603A	CEN	380 - 82
	DII	
	GSE	
	HTN	
	IDC	
	MSC	
	SAR	
	SCE	
	SCN	
	SPE	
	SSI	
	TRWS	
1N1604	CEN	381 -123
	CRI	
	DII	
	ETC	
	♦GSE	
	HTN	
	IDC	
	MSC	
	SAR	
	SCE	
	SCN	
	SIEG	
	SPE	
	SSI	
	TRWS	
1N1604A	CEN	381 -108
	DII	
	ETC	
	GSE	
	HTN	
	IDC	
	MSC	
	SAR	
	SCE	
	SCN	
	SPE	
	SSI	
	TRWS	
1N1605	CEN	382 -132
	CRI	
	DII	
	ETC	
	♦GSE	
	HTN	
	IDC	
	MSC	
	SAR	
	SCE	
	SCN	
	SIEG	
	SPE	
	SSI	
	TRWS	
	WAB	
1N1605A	CEN	382 -117
	DII	
	ETC	
	GSE	
	HTN	
	IDC	
	MSC	
	SAR	
	SCE	
	SCN	
	SPE	
	SSI	
	TRWS	
1N1606	CEN	384 - 16
	CRI	
	DII	
	ETC	
	♦GSE	
	HTN	
	IDC	
	MSC	
	SAR	
	SCE	
	SCN	
	SIEG	
	SPE	
	SSI	
	TRWS	
	WAB	
1N1606A	CEN	384 - 1
	DII	
	ETC	
	GSE	
	HTN	
	IDC	
	MSC	
	SAR	
	SCE	
	SCN	
	SPE	
	SSI	
	TRWS	
1N1607	CEN	385 - 78
	CRI	
	DII	
	ETC	
	♦GSE	
	HTN	
	IDC	
	MSC	
	SCE	
	SCN	
	SIEG	
	SPE	
	SSI	
	TRWS	
	UPI	
1N1607A	CEN	385 - 64
	DII	
	ETC	
	GSE	
	HTN	
	IDC	
	MSC	
	SCE	
	SCN	
	SSI	
	TRWS	
	UPI	
1N1608	CEN	386 -133
	CRI	
	DII	
cont.next page		

Δ-Registered with JEDEC by this manufacturer

♦-Mfr's data sheet available in microfilm service

1. TYPE No. CROSS INDEX

IN TYPE NUMBER SEQUENCE

TYPE No.	MFRS	Pg&Line
1N1608 (cont.)	ETC	
	♦GSE	
	HTN	
	IDC	
	MSC	
	SCE	
	SCN	
	SIEG	
	SPE	
	SSI	
	TRWS	
	WAB	
1N1608A	CEN	386 -119
	DII	
	ETC	
	GSE	
	HTN	
	IDC	
	MSC	
	SCE	
	SCN	
	SPE	
	SSI	
	TRWS	
1N1609	AMR	387 -192
	CEN	
	CRI	
	DII	
	ETC	
	♦GSE	
	HTN	
	IDC	
	MSC	
	SCE	
	SCN	
	SIEG	
	SPE	
	SSI	
	TRWS	
1N1609A	AMR	387 -177
	CEN	
	DII	
	ETC	
	GSE	
	HTN	
	IDC	
	MSC	
	SCE	
	SCN	
	SPE	
	SSI	
	TRWS	
1N1612	ΔSOD	290 -107
	AMR	
	ASI	
	CEI	
	CEN	
	COO	
	CRI	
	DII	
	EDL	
	ETC	
	GTC	
	HSE	
	HTN	
	IDC	
	IDI	
	♦PRX	
	SAR	
	SCN	
	SLCB	
	SLD	
	SPE	
	SSI	
	SST	
	UPI	
	WAB	
1N1612A	AMR	290 -127
	ASI	
	CEN	
	ETC	
	HSE	
	IDC	
	SAR	
	SCN	
	SOD	
	SPE	
	SSI	
	UPI	
1N1612R	AMR	292 -218
	CEN	
	ETC	
	SPE	
	SSI	
	UPI	
1N1613	ΔSOD	290 -133
	AMR	
	ASI	
	CEI	
	CEN	
	COO	
	CRI	
	DII	
	EDL	
	ETC	
	GTC	
	HSE	
	HTN	
	IDC	
	IDI	
	♦PRX	
	SAR	
	SCN	
	SLCB	
	SLD	
	SPE	
	SSI	
	SST	
	TIC	
	UPI	
	WAB	
1N1613A	AMR	290 -155
	ASI	
	CEN	
	ETC	
	HSE	
	IDC	
	SAR	
	SCN	
	SLD	
	SOD	
	SPE	
	SSI	
	UPI	
1N1613R	AMR	293 - 4
	CEN	
	ETC	
	SPE	
	SSI	
	UPI	
1N1614	ΔSOD	290 -165
	AMR	
	ASI	
	CEI	
	CEN	
	COO	
	CRI	
	DII	
	♦DIT	
	EDL	
	ETC	
	GTC	
	HSE	
	HTN	
	IDC	
	IDI	
	♦PRX	
	SAR	
	SCN	
	SLCB	
	SPE	
	SSI	
	SST	
	TIC	
	UPI	
	WAB	
1N1614A	AMR	290 -193
	ASI	
	CEN	
	ETC	
	HSE	
	IDC	
	SAR	
	SCN	
	SOD	
	SPE	
	SSI	
	SST	
	UPI	
1N1614R	AMR	293 - 13
	CEN	
	ETC	
	SSI	
	UPI	
1N1615	ΔSOD	290 -217
	AMR	
	ASI	
	CEI	
	CEN	
	COO	
	CRI	
	DII	
	♦DIT	
	EDL	
	ETC	
	GTC	
	HSE	
	HTN	
	IDC	
	IDI	
	♦PRX	
	SAR	
	SCN	
cont.next col.		

TYPE No.	MFRS	Pg&Line
1N1615 (cont.)	SLCB	
	SLD	
	SPE	
	SSI	
	SST	
	UPI	
	WAB	
1N1615A	AMR	291 - 22
	ASI	
	CEN	
	ETC	
	HSE	
	HTN	
	IDC	
	SAR	
	SCN	
	SOD	
	SPE	
	SSI	
	UPI	
1N1615R	AMR	293 - 20
	CEN	
	ETC	
	SPE	
	UPI	
	WAB	
1N1616	ΔSOD	291 - 39
	AMR	
	ASI	
	CEI	
	CEN	
	♦COO	
	CRI	
	DII	
	♦DIT	
	EDL	
	ETC	
	GTC	
	HSE	
	HTN	
	IDC	
	IDI	
	♦PRX	
	SAR	
	SCN	
	SLCB	
	SLD	
	SPE	
	SSI	
	UPI	
	WAB	
1N1616A	AMR	291 - 56
	ASI	
	CEN	
	ETC	
	HSE	
	IDC	
	SAR	
	SCN	
	SOD	
	SPE	
	SSI	
1N1616R	AMR	293 - 26
	ETC	
1N1617	ΔSAR	283 -174
	AMR	
	CEN	
	CRI	
	♦DIT	
	SPE	
	UPI	
1N1618	ΔSAR	284 - 22
	AMR	
	CEN	
	CRI	
	♦DIT	
	SPE	
	UPI	
1N1619	ΔSAR	284 - 63
	AMR	
	CEN	
	CRI	
	SPE	
	UPI	
1N1620	ΔSAR	284 -129
	AMR	
	CEN	
	CRI	
	SPE	
	UPI	
1N1621	Δ♦SAR	294 - 12
	AMR	
	CEN	
	CRI	
	SPE	
1N1622	Δ♦SAR	294 - 45
	AMR	
	CEN	
	CRI	
	SPE	
1N1623	Δ♦SAR	294 - 68
	AMR	
	CEN	
	CRI	
	SPE	
1N1624	Δ♦SAR	294 - 91
	AMR	
	CEN	
	SPE	
1N1625	EDL	232 - 83
	SPE	
1N1625A	EDL	232 - 85
	SPE	
1N1626	EDL	232 - 84
1N1626A	EDL	232 - 86
	SPE	
1N1627	EDL	232 - 99
	SPE	
1N1628	EDL	232 -100
	SPE	
1N1629	EDL	232 -101
	SPE	
1N1630	EDL	232 -102
	SPE	
1N1631	EDL	232 -103
	SPE	
1N1632	EDL	232 -104
	SPE	
1N1633	EDL	232 -105
	SPE	
1N1634	EDL	232 -106
	SPE	
1N1635	EDL	232 -130
	SPE	
1N1636	EDL	232 -131
	IDC	
	SPE	
1N1637	EDL	232 -132
	SPE	
1N1638	EDL	232 -133
	SPE	
1N1639	EDL	232 -134
	SPE	
1N1640	EDL	232 -186
	SPE	
1N1641	EDL	232 -187
	IDC	
	SPE	
1N1642	EDL	232 -188
	SPE	
	UTX	
1N1644	AMR	277 -208
	CEN	
	ETC	
	HTN	
	IDC	
	SCN	
	SPE	
1N1645	AMR	278 - 20
	CEN	
	ETC	
	HTN	
	SCN	
	SPE	
1N1646	CEN	278 - 36
cont.next col.		

TYPE No.	MFRS	Pg&Line
1N1646 (cont.)	ETC	
	HTN	
	SCN	
	SPE	
1N1647	CEN	278 - 60
	ETC	
	HTN	
	SCN	
	SPE	
	UPI	
1N1648	CEN	278 - 86
	ETC	
	HTN	
	SCN	
	SPE	
	UPI	
1N1649	CEN	278 -105
	CRI	
	ETC	
	HTN	
	SCN	
	SPE	
	UPI	
1N1650	CEN	278 -117
	CRI	
	ETC	
	HTN	
	SCN	
	SPE	
	UPI	
1N1651	CEN	278 -141
	CRI	
	ETC	
	HTN	
	SCN	
	SPE	
	UPI	
1N1652	CEN	278 -178
	CRI	
	ETC	
	HTN	
	SCN	
	SPE	
1N1653	CEN	278 -213
	CRI	
	ETC	
	HTN	
	SCN	
	SPE	
1N1660	CEN	306 -193
	COO	
	EDL	
	ETC	
	HSE	
	HTN	
	SPE	
	SSI	
	UPI	
1N1661	ASI	306 -194
	CEN	
	COO	
	EDL	
	ETC	
	HSE	
	HTN	
	SPE	
	SSI	
	UPI	
	WAB	
1N1662	CEN	306 -195
	COO	
	EDL	
	ETC	
	HSE	
	HTN	
	SPE	
	SSI	
	UPI	
1N1663	CEN	306 -196
	COO	
	EDL	
	ETC	
	HSE	
	HTN	
	SPE	
	SSI	
	UPI	
1N1664	CEN	306 -197
	COO	
	EDL	
	ETC	
	HSE	
	HTN	
	SPE	
	SSI	
	UPI	
1N1665	CEN	306 -199
	COO	
	EDL	
	ETC	
	HSE	
	HTN	
	SPE	
	SSI	
	UPI	
1N1666	CEN	306 -200
	COO	
	CRI	
	EDL	
	HSE	
	HTN	
	SPE	
	SSI	
	UPI	
1N1670	COO	309 - 35
	CRI	
	HSE	
	HTN	
	SPE	
	SSI	
1N1671	COO	309 - 40
	CRI	
	ETC	
	HSE	
	HTN	
	SPE	
	SSI	
1N1672	COO	309 - 43
	CRI	
	ETC	
	HSE	
	HTN	
	SPE	
	SSI	
1N1673	COO	309 - 50
	CRI	
	ETC	
	HSE	
	HTN	
	SPE	
	SSI	
1N1674	COO	309 - 54
	CRI	
	ETC	
	HSE	
	HTN	
	SPE	
	SSI	
1N1675	COO	309 - 61
	CRI	
	ETC	
	HSE	
	HTN	
	SPE	
	SSI	
1N1676	HTN	309 - 66
	SPE	
	SSI	
1N1680	SPE	302 -152
	SSI	
1N1681	SPE	302 -177
	SSI	
1N1682	SPE	302 -183
	SSI	
1N1683	SPE	302 -187
	SSI	
1N1684	SPE	302 -206
	SSI	
1N1685	SPE	302 -213
	SSI	
1N1686	SPE	302 -217
	SSI	
1N1687	SPE	303 - 9
	SSI	
1N1688	SPE	303 - 12
	SSI	
1N1689	SPE	303 - 29
	SSI	

TYPE No.	MFRS	Pg&Line
1N1690	SPE	303 - 30
	SSI	
1N1691	SPE	403 -209
	SSI	
1N1692	ASI	277 - 98
	CEI	
	CEN	
	CRI	
	ETC	
	IDC	
	IDI	
	MAL	
	MIC	
	SAR	
	SCN	
	SLD	
	SPE	
	SST	
	WAB	
1N1693	ASI	277 -113
	CEI	
	CEN	
	CRI	
	ETC	
	HTN	
	IDC	
	IDI	
	MAL	
	SAR	
	SCN	
	SLD	
	SPE	
	SST	
	UPI	
	WAB	
1N1694	CEI	277 -127
	CEN	
	CRI	
	ETC	
	HTN	
	IDC	
	IDI	
	MAL	
	SAR	
	SCN	
	SLD	
	SPE	
	SST	
	SSY	
	UPI	
1N1695	CEI	277 -140
	CEN	
	CRI	
	ETC	
	HTN	
	IDC	
	IDI	
	MAL	
	SAR	
	SCN	
	SLD	
	SPE	
	SST	
	SSY	
	UPI	
1N1696	CEI	277 -155
	CEN	
	ETC	
	HTN	
	IDC	
	IDI	
	MAL	
	SAR	
	SCN	
	SLD	
	SPE	
	SST	
	UPI	
1N1697	ASI	277 -166
	CEI	
	CEN	
	ETC	
	HTN	
	IDC	
	IDI	
	MAL	
	SAR	
	SCN	
	SLD	
	SPE	
	SST	
	WAB	
1N1698	♦CODI	425 - 53
	HTN	
	SCN	
	SPE	
	UTX	
1N1699	♦CODI	427 -127
	HTN	
	SCN	
	SPE	
	UTX	
1N1700	♦CODI	428 -114
	HTN	
	SCN	
	SPE	
	UTX	
1N1701	CEN	275 -205
	HTN	
	IDC	
	SAR	
	SCN	
	SPE	
	UPI	
1N1702	CEN	275 -212
	HTN	
	IDC	
	SAR	
	SCN	
	SPE	
	UPI	
1N1703	CEN	276 - 2
	HTN	
	IDC	
	SAR	
	SCN	
	SPE	
	UPI	
1N1704	CEN	276 - 9
	HTN	
	SAR	
	SCN	
	SPE	
	UPI	
1N1705	CEN	276 - 17
	HTN	
	IDC	
	SAR	
	SCN	
	SPE	
	UPI	
1N1706	CEN	276 - 25
	HTN	
	IDC	
	SAR	
	SCN	
	SPE	
1N1707	CEN	276 -140
	HTN	
	IDC	
	SAR	
	SCN	
	SPE	
1N1708	CEN	276 -156
	HTN	
	IDC	
	SAR	
	SCN	
	SPE	
1N1709	CEN	276 -181
	HTN	
	IDC	
	SAR	
	SCN	
	SPE	
	UPI	
1N1710	CEN	276 -202
	HTN	
	IDC	
	SAR	
	SCN	
	SPE	
	UPI	
1N1711	CEN	276 -220
	HTN	
	IDC	
	SAR	
	SCN	
	SPE	
	UPI	
1N1712	CEN	277 - 27
	HTN	
	IDC	
	SAR	
	SCN	
	SPE	
1N1730	ΔTRWS	401 - 44
	CODI	
	CSD	
	DII	
	EDL	
	HTN	
	IDC	
cont.next col.		

TYPE No.	MFRS	Pg&Line
1N1730 (cont.)	PDE	
	SAR	
	SCN	
	♦SOD	
	SPE	
	SSI	
1N1730A	ΔTRWS	401 - 23
	EDL	
	HTN	
	IDC	
	SCN	
	SPE	
	SSI	
1N1731	ΔTRWS	411 - 7
	ASI	
	♦CODI	
	CSD	
	DII	
	EDL	
	HTN	
	IDC	
	PDE	
	SAR	
	SCN	
	♦SOD	
	SPE	
	SSI	
	WAB	
1N1731A	ΔTRWS	410 -207
	EDL	
	HTN	
	IDC	
	SCN	
	SPE	
	SSI	
	UPI	
1N1732	ΔTRWS	414 -211
	ASI	
	♦CODI	
	CRI	
	CSD	
	DII	
	EDL	
	HTN	
	IDC	
	PDE	
	SAR	
	SCN	
	♦SOD	
	SPE	
	SSI	
	WAB	
1N1732A	ΔTRWS	414 -195
	EDL	
	IDC	
	SCN	
	SPE	
	SSI	
1N1733	ΔTRWS	419 - 78
	ASI	
	♦CODI	
	CRI	
	CSD	
	DII	
	EDL	
	HTN	
	IDC	
	PDE	
	SAR	
	SCN	
	♦SOD	
	SPE	
	SSI	
	UPI	
	WAB	
1N1733A	ΔTRWS	419 - 72
	ASI	
	EDL	
	IDC	
	SCN	
	SPE	
	SSI	
	WAB	
1N1734	ΔTRWS	423 -103
	ASI	
	♦CODI	
	CRI	
	CSD	
	DII	
	EDL	
	HTN	
	IDC	
	PDE	
	SAR	
	SCN	
	♦SOD	
	SPE	
	SSI	
	WAB	
1N1734A	ΔTRWS	423 -101
	ASI	
	EDL	
	IDC	
	SCN	
	SPE	
	SSI	
	WAB	
1N1735	CODI	174 - 95
	CRI	
	DII	
	♦GSE	
	HTN	
	IDC	
	PDE	
	SCE	
	SIEG	
	SPE	
	♦SSI	
	STI	
	TRWS	
1N1736	CODI	191 -196
	CRI	
	DII	
	♦GSE	
	HTN	
	IDC	
	MSC	
	PDE	
	SCE	
	SIEG	
	SPE	
	♦SSI	
	STI	
	TRWS	
1N1736A	CODI	191 -197
	DII	
	♦GSE	
	IDC	
	PDE	
	SCE	
	SPE	
	♦SSI	
	STI	
	TRWS	
1N1737	CODI	199 -100
	CRI	
	DII	
	♦GSE	
	HTN	
	IDC	
	PDE	
	SCE	
	SIEG	
	SPE	
	♦SSI	
	STI	
	TRWS	
1N1737A	CODI	199 -101
	DII	
	♦GSE	
	IDC	
	MSC	
	PDE	
	SCE	
	SPE	
	♦SSI	
	STI	
	TRWS	
1N1738	CODI	204 - 82
	CRI	
	DII	
	♦GSE	
	HTN	
	IDC	
	PDE	
	SCE	
	SIEG	
	SPE	
	♦SSI	
	STI	
	TRWS	
1N1738A	CODI	204 - 83
	DII	
	♦GSE	
	HTN	
	IDC	
	MSC	
	PDE	
	SCE	
	SPE	
	♦SSI	
	STI	
	TRWS	
1N1739	CODI	207 -150
	CRI	
	DII	
cont.next page		

1. TYPE No. CROSS INDEX

IN TYPE NUMBER SEQUENCE

TYPE No.	MFRS	Pg&Line
1N1739 (cont.)	♦GSE	
HTN	IDC	
MSC	PDE	
SCE	SIEG	
SPE	♦SSI	
STI	TRWS	
1N1739A	CODI	207 -151
DII	♦GSE	
HTN	IDC	
MSC	PDE	
SCE	SPE	
♦SSI	STI	
	TRWS	
1N1740	CODI	210 -100
CRI	DII	
♦GSE	HTN	
IDC	MSC	
PDE	SCE	
SIEG	SPE	
♦SSI	STI	
	TRWS	
1N1740A	CODI	210 -101
DII	♦GSE	
HTN	IDC	
PDE	SCE	
SPE	♦SSI	
STI	TRWS	
1N1741	CODI	212 -126
CRI	DII	
♦GSE	HTN	
IDC	PDE	
SCE	SIEG	
SPE	♦SSI	
STI	TRWS	
1N1741A	CODI	212 -127
DII	♦GSE	
HTN	IDC	
PDE	SCE	
SPE	♦SSI	
STI	TRWS	
1N1742	CODI	213 -145
CRI	DII	
♦GSE	HTN	
IDC	PDE	
SCE	SIEG	
SPE	♦SSI	
STI	TRWS	
1N1742A	CODI	213 -146
DII	♦GSE	
HTN	IDC	
MSC	PDE	
SCE	SPE	
♦SSI	STI	
	TRWS	
1N1744	SPE	187 -160
1N1745	♦CODI	411 - 32
CRI	DII	
EDL	HTN	
SCN	SOD	
SPE	SSI	
	UTX	
1N1746	♦CODI	411 - 36
CRI	DII	
EDL	HTN	
SCN	SOD	
SPE	SSI	
	UTX	
1N1747	♦CODI	413 -198
CRI	DII	
EDL	HTN	
SCN	SOD	
SPE	SSI	
	UTX	
1N1748	♦CODI	413 -201
CRI	DII	
EDL	HTN	
SCN	SOD	
SPE	SSI	
	UTX	
1N1749	♦CODI	416 -215
CRI	DII	
EDL	HTN	
SCN	SOD	
SPE	SSI	
	UTX	
1N1750	♦CODI	416 -217
DII	EDL	
HTN	SCN	
SOD	SPE	
SSI	UTX	
1N1751	AMR	421 - 13
♦CODI	EDL	
HTN	SCN	
SOD	SSI	
	UTX	
1N1752	AMR	421 - 12
♦CODI	CRI	
DII	EDL	
HTN	SCN	
SOD	SSI	
	UTX	
1N1753	AMR	423 - 28
♦CODI	CRI	
EDL	HTN	
SCN	SOD	
SSI	UTX	
1N1754	AMR	423 - 27
♦CODI	CRI	
DII	EDL	
HTN	SCN	
SOD	SSI	
	UTX	

TYPE No.	MFRS	Pg&Line
1N1755	AMR	424 -181
♦CODI	CRI	
EDL	HTN	
SCN	SOD	
SSI	UTX	
1N1756	AMR	424 -190
♦CODI	CRI	
EDL	HTN	
SCN	SOD	
SSI	UTX	
1N1757	AMR	425 -129
♦CODI	CRI	
DII	EDL	
HTN	SCN	
SOD	SSI	
	UTX	
1N1758	AMR	425 -130
♦CODI	CRI	
EDL	HTN	
SCN	SOD	
SSI	UTX	
1N1759	AMR	426 - 50
♦CODI	CRI	
DII	EDL	
HTN	SCN	
SOD	SSI	
	UTX	
1N1760	AMR	428 - 94
♦CODI	CRI	
DII	EDL	
HTN	SCN	
SOD	SSI	
	UTX	
1N1761	AMR	428 -209
♦CODI	CRI	
DII	EDL	
HTN	SCN	
SOD	SSI	
	UTX	
1N1762	AMR	429 -205
♦CODI	CRI	
DII	EDL	
HTN	SCN	
SOD	SSI	
	UTX	
1N1763	AMR	277 - 3
CEN	CRI	
EDL	HTN	
SAR	SCN	
SPE	UPI	
1N1763A	AMR	281 - 93
CEI	CEN	
EDL	ETC	
HTN	IDC	
SCN	SPE	
	UPI	
1N1764	AMR	277 - 28
ASI	CEN	
CRI	EDL	
HTN	IDC	
SAR	SCN	
SPE	WAB	
1N1764A	AMR	281 -145
CEI	CEN	
EDL	ETC	
HTN	IDC	
SCN	SPE	
1N1765	AMR	173 - 75
♦APD	CEN	
CRI	DII	
ETC	♦GSE	
HTN	IDC	
SAR	SCE	
SCN	SLD	
SPE	SSI	
	SST	
1N1765A	AMR	173 - 54
CEN	DII	
ETC	GSE	
HTN	IDC	
SAR	SCE	
SCN	SSI	
1N1766	AMR	175 -138
♦APD	CEN	
CRI	DII	
ETC	♦GSE	
HTN	IDC	
SAR	SCE	
SCN	SLD	
SPE	SSI	
SST	TRWS	
	UPI	
1N1766A	AMR	175 -116
CEN	DII	
ETC	GSE	
HTN	IDC	
SAR	SCE	
SCN	SSI	
SSY	TRWS	
UPI	WAB	
1N1767	AMR	178 -127
♦APD	CEN	
CRI	DII	
ETC	♦GSE	
HTN	IDC	
SAR	SCE	
SCN	SLD	
SSI	SST	
	TRWS	
1N1767A	AMR	178 - 94
APD	CEN	
DII	ETC	
GSE	HTN	

cont.next col.

TYPE No.	MFRS	Pg&Line
1N1767A (cont.)	IDC	
SAR	SCE	
SCN	SSI	
	TRWS	
1N1768	AMR	180 -119
♦APD	CEN	
CRI	DII	
ETC	♦GSE	
HTN	IDC	
SAR	SCE	
SCN	SLD	
SSI	SST	
	TRWS	
1N1768A	AMR	180 - 87
APD	CEN	
DII	ETC	
GSE	HTN	
IDC	SAR	
SCE	SCN	
SSI	TRWS	
1N1769	AMR	182 -107
♦APD	CEN	
CRI	DII	
ETC	♦GSE	
HTN	IDC	
SAR	SCE	
SCN	SLD	
SSI	SST	
	TRWS	
1N1769A	AMR	182 - 72
APD	CEN	
DII	ETC	
GSE	HTN	
IDC	SAR	
SCE	SCN	
SSI	TRWS	
1N1770	AMR	185 -137
♦APD	CEN	
CRI	DII	
ETC	♦GSE	
HTN	IDC	
SAR	SCE	
SCN	SLD	
SPE	SSI	
SST	TRWS	
1N1770A	AMR	185 -104
APD	CEN	
DII	ETC	
GSE	HTN	
IDC	SAR	
SCE	SCN	
SPE	SSI	
	TRWS	
1N1771	AMR	187 -201
♦APD	CEN	
CRI	DII	
ETC	♦GSE	
HTN	IDC	
SAR	SCE	
SCN	SLD	
SPE	SSI	
SST	TRWS	
1N1771A	AMR	187 -161
APD	CEN	
DII	ETC	
GSE	HTN	
IDC	SAR	
SCE	SCN	
SSI	TRWS	
	WAB	
1N1772	AMR	189 -109
♦APD	CEN	
CRI	DII	
ETC	♦GSE	
HTN	IDC	
SAR	SCE	
SCN	SLD	
SSI	SST	
	TRWS	
1N1772A	AMR	189 - 75
APD	CEN	
DII	ETC	
GSE	HTN	
IDC	SAR	
SCE	SCN	
SSI	TRWS	
1N1773	AMR	191 - 80
♦APD	CEN	
CRI	DII	
ETC	♦GSE	
HTN	IDC	
SAR	SCE	
SCN	SLD	
SPE	SSI	
SST	TRWS	
	UPI	
1N1773A	AMR	191 - 41
APD	CEN	
DII	ETC	
GSE	HTN	
IDC	SAR	
SCE	SCN	
SPE	SSI	
TRWS	WAB	
1N1774	AMR	193 - 27
♦APD	CEN	
CRI	DII	
ETC	♦GSE	
HTN	IDC	
SAR	SCE	
SCN	SLD	
SPE	SSI	
SST	TRWS	

TYPE No.	MFRS	Pg&Line
1N1774A	AMR	192 -208
APD	CEN	
DII	ETC	
GSE	HTN	
IDC	SAR	
SCE	SCN	
SSI	TRWS	
1N1775	AMR	195 - 79
♦APD	CEN	
CRI	DII	
ETC	♦GSE	
HTN	IDC	
SAR	SCE	
SCN	SLD	
SPE	SSI	
SST	TRWS	
	WAB	
1N1775A	AMR	195 - 41
APD	CEN	
DII	ETC	
GSE	HTN	
IDC	SAR	
SCE	SCN	
SPE	SSI	
	TRWS	
1N1776	AMR	196 -170
♦APD	CEN	
CRI	DII	
ETC	♦GSE	
HTN	IDC	
SAR	SCE	
SCN	SLD	
SPE	SSI	
SST	TRWS	
1N1776A	AMR	196 -137
APD	CEN	
DII	ETC	
GSE	HTN	
IDC	SAR	
SCE	SCN	
SPE	SSI	
	TRWS	
1N1777	AMR	198 -187
♦APD	CEN	
CRI	DII	
ETC	♦GSE	
HTN	IDC	
SAR	SCE	
SCN	SLD	
SPE	SSI	
SST	TRWS	
1N1777A	AMR	198 -152
APD	CEN	
DII	ETC	
GSE	HTN	
IDC	SAR	
SCE	SCN	
SSI	TRWS	
	WAB	
1N1778	AMR	200 -178
♦APD	CEN	
CRI	DII	
ETC	♦GSE	
HTN	IDC	
SAR	SCE	
SCN	SLD	
SPE	SSI	
SST	TRWS	
1N1778A	AMR	200 -144
APD	CEN	
DII	ETC	
GSE	HTN	
IDC	SAR	
SCE	SCN	
SSI	TRWS	
1N1779	AMR	200 -179
♦APD	CEN	
CRI	DII	
ETC	♦GSE	
HTN	IDC	
SAR	SCE	
SCN	SLD	
SSI	SST	
	TRWS	
1N1779A	AMR	200 -145
APD	CEN	
DII	ETC	
GSE	HTN	
IDC	SAR	
SCE	SCN	
SSI	TRWS	
1N1780	AMR	203 -175
♦APD	CEN	
CRI	DII	
ETC	♦GSE	
HTN	IDC	
SAR	SCE	
SCN	SLD	
SPE	SSI	
SST	TRWS	
UPI	WAB	
1N1780A	AMR	200 -146
APD	CEN	
DII	ETC	
GSE	IDC	
SAR	SCE	
SCN	SSI	
	TRWS	
1N1781	AMR	205 -116
♦APD	CEN	
CRI	DII	
ETC	♦GSE	
HTN	IDC	

cont.next col.

TYPE No.	MFRS	Pg&Line
1N1781 (cont.)	SAR	
SCE	SCN	
SLD	SSI	
SST	TRWS	
1N1781A	AMR	205 - 80
APD	CEN	
DII	ETC	
GSE	IDC	
SAR	SCE	
SCN	SPE	
SSI	TRWS	
1N1782	AMR	207 - 40
♦APD	CEN	
CRI	DII	
ETC	♦GSE	
HTN	IDC	
SAR	SCE	
SCN	SLD	
SPE	SSI	
SST	TRWS	
1N1782A	AMR	207 - 6
APD	CEN	
DII	ETC	
GSE	IDC	
SAR	SCE	
SCN	SPE	
SSI	TRWS	
1N1783	AMR	208 -134
♦APD	CEN	
CRI	DII	
ETC	♦GSE	
HTN	IDC	
SAR	SCE	
SCN	SLD	
SSI	SST	
TRWS	UPI	
1N1783A	AMR	208 - 98
APD	CEN	
DII	ETC	
♦GSE	IDC	
SAR	SCE	
SCN	SSI	
	TRWS	
1N1784	AMR	209 -192
♦APD	CEN	
CRI	DII	
ETC	♦GSE	
HTN	IDC	
SAR	SCE	
SCN	SLD	
SSI	SST	
TRWS	WAB	
1N1784A	AMR	209 -165
APD	CEN	
DII	ETC	
♦GSE	IDC	
SAR	SCE	
SCN	SPE	
SSI	TRWS	
1N1785	AMR	211 - 26
♦APD	CEN	
CRI	DII	
ETC	♦GSE	
HTN	IDC	
SAR	SCE	
SCN	SLD	
SPE	SSI	
SST	TRWS	
	WAB	
1N1785A	AMR	211 - 1
APD	CEN	
DII	ETC	
♦GSE	IDC	
SAR	SCE	
SCN	SSI	
	TRWS	
1N1786	AMR	212 - 36
♦APD	CEN	
CRI	DII	
ETC	♦GSE	
HTN	IDC	
SAR	SCE	
SCN	SLD	
SPE	SSI	
SST	TRWS	
	UPI	
1N1786A	AMR	212 - 14
APD	CEN	
DII	ETC	
♦GSE	IDC	
SAR	SCE	
SCN	SSI	
	TRWS	
1N1787	AMR	213 - 51
♦APD	CEN	
CRI	DII	
ETC	♦GSE	
HTN	IDC	
SAR	SCE	
SCN	SLD	
SSI	SST	
1N1787A	AMR	213 - 3
APD	CEN	
DII	ETC	
♦GSE	IDC	
SAR	SCE	
SCN	SSI	
1N1788	AMR	214 -
♦APD	CEN	
CRI	DII	
ETC	♦GSE	
HTN	IDC	

cont.next page

Δ-Registered with JEDEC by this manufacturer

♦-Mfr's data sheet available in microfilm service

1. TYPE No. CROSS INDEX

IN TYPE NUMBER SEQUENCE

TYPE No.	MFRS	Pg&Line
1N1788		
(cont.)	SAR	
	SCE	
	SCN	
	SLD	
	SSI	
	SST	
1N1788A	AMR	214 - 29
	APD	
	CEN	
	DII	
	ETC	
	♦GSE	
	IDC	
	SAR	
	SCE	
	SCN	
	SSI	
	UPI	
1N1789	AMR	215 - 35
	♦APD	
	CEN	
	CRI	
	DII	
	ETC	
	♦GSE	
	HTN	
	IDC	
	SAR	
	SCE	
	SCN	
	SLD	
	SPE	
	SSI	
	SST	
	WAB	
1N1789A	AMR	215 - 14
	APD	
	CEN	
	DII	
	ETC	
	♦GSE	
	IDC	
	SAR	
	SCE	
	SCN	
	SSI	
1N1790	AMR	216 - 41
	♦APD	
	CEN	
	CRI	
	DII	
	ETC	
	♦GSE	
	HTN	
	IDC	
	SAR	
	SCE	
	SCN	
	SLD	
	SSI	
	SST	
1N1790A	AMR	216 - 21
	APD	
	CEN	
	DII	
	ETC	
	♦GSE	
	IDC	
	SAR	
	SCE	
	SCN	
	SSI	
1N1791	AMR	217 - 21
	♦APD	
	CEN	
	CRI	
	DII	
	ETC	
	♦GSE	
	HTN	
	IDC	
	SAR	
	SCE	
	SCN	
	SLD	
	SSI	
	SST	
1N1791A	AMR	217 - 1
	APD	
	CEN	
	DII	
	ETC	
	♦GSE	
	IDC	
	SAR	
	SCE	
	SCN	
	SSI	
1N1792	AMR	218 - 4
	APD	
	CEN	
	CRI	
	DII	
	ETC	
	♦GSE	
	HTN	
	IDC	
	SAR	
	SCE	
	SCN	
	SLD	
	SSI	
	SST	
1N1792A	AMR	217 -184
	CEN	
	DII	
	ETC	
	♦GSE	
	IDC	
	SAR	
	SCE	
	SCN	
	SSI	
1N1793	AMR	218 -183
	APD	
	CEN	
	CRI	
	DII	
	ETC	
	♦GSE	
	HTN	
	IDC	
	SAR	
	SCE	
	SCN	
	SLD	
	SPE	
	SSI	
	SST	
1N1793A	AMR	218 -163
	CEN	
	DII	
	ETC	
	♦GSE	
	IDC	
	SAR	
	SCE	
	SCN	
	SSI	
1N1794	AMR	219 -163
	CEN	
	CRI	
	DII	
	ETC	
	♦GSE	
	HTN	
	IDC	
	SAR	
	SCE	
	SCN	
	SLD	
	SSI	
	SST	
1N1794A	AMR	219 -146
	CEN	
	DII	
	ETC	
	♦GSE	
	IDC	
	SAR	
	SCE	
	SCN	
	SSI	
	UPI	
1N1795	AMR	220 -123
	CEN	
	CRI	
	DII	
	ETC	
	♦GSE	
	HTN	
	IDC	
	SAR	
	SCE	
	SCN	
	SLD	
	SPE	
	SSI	
	SST	
	UPI	
1N1795A	AMR	220 -104
	CEN	
	DII	
	ETC	
	♦GSE	
	IDC	
	SAR	
	SCE	
	SCN	
	SSI	
1N1796	AMR	221 - 87
	CEN	
	CRI	
	DII	
	ETC	
	♦GSE	
	HTN	
	IDC	
	SAR	
	SCE	
	SCN	
	SSI	
1N1796A	AMR	221 - 70
	CEN	
	DII	
	ETC	
	♦GSE	
	IDC	
	SAR	
	SCE	
	SCN	
	SSI	
1N1797	AMR	222 - 37
	CEN	
	CRI	
	DII	
	ETC	
	♦GSE	
	HTN	
	IDC	
	SAR	
	SCE	
	SCN	
	SSI	
1N1797A	AMR	222 - 21
	CEN	
	DII	
	ETC	
	♦GSE	
	IDC	
	SAR	
	SCE	
	SCN	
	SPE	
	SSI	
	WAB	
1N1798	AMR	222 -182
	CEN	
	CRI	
	DII	
	ETC	
	♦GSE	
	HTN	
	IDC	
	SAR	
	SCE	
	SCN	
	SSI	
1N1798A	AMR	222 -166
	CEN	
	DII	
	ETC	
	♦GSE	
	IDC	
	SAR	
	SCE	
	SCN	
	SSI	
1N1799	AMR	224 - 26
	CEN	
	CRI	
	DII	
	ETC	
	♦GSE	
	HTN	
	SAR	
	SCE	
	SCN	
	SSI	
	WAB	
1N1799A	AMR	224 - 10
	CEN	
	DII	
	ETC	
	♦GSE	
	SAR	
	SCE	
	SCN	
	SSI	
1N1800	AMR	224 -158
	CEN	
	CRI	
	DII	
	ETC	
	♦GSE	
	HTN	
	SAR	
	SCE	
	SCN	
	SSI	
1N1800A	AMR	224 -143
	CEN	
	DII	
	ETC	
	♦GSE	
	SAR	
	SCE	
	SCN	
	SSI	
1N1801	AMR	225 -165
	CEN	
	CRI	
	DII	
	ETC	
	♦GSE	
	HTN	
	IDC	
	SAR	
	SCE	
	SCN	
	SSI	
1N1801A	AMR	225 -148
	CEN	
	DII	
	ETC	
	♦GSE	
	SAR	
	SCE	
	SCN	
	SSI	
1N1802	AMR	226 -168
	CEN	
	CRI	
	DII	
	ETC	
	♦GSE	
	HTN	
	SAR	
	SCE	
	SCN	
	SPE	
	SSI	
	WAB	
1N1802A	AMR	226 -152
	CEN	
	DII	
	ETC	
	♦GSE	
	SAR	
	SCE	
	SCN	
	SSI	
1N1803	AMR	378 -114
	CEN	
	CRI	
	DII	
	♦GSE	
	HTN	
	IDC	
	MSC	
	SAR	
	SCE	
	SCN	
	SIEG	
	SPE	
	SSI	
1N1803A	AMR	378 -109
	CEN	
	DII	
	♦GSE	
	IDC	
	MSC	
	SAR	
	SCE	
	SCN	
	SSI	
1N1803B	AMR	378 -118
	CEN	
	♦GSE	
	IDC	
	SAR	
1N1804	AMR	378 -167
	CEN	
	CRI	
	DII	
	♦GSE	
	HTN	
	IDC	
	MSC	
	SAR	
	SCE	
	SCN	
	SIEG	
	SSI	
1N1804A	AMR	378 -162
	CEN	
	DII	
cont.next col.		
1N1804A		
(cont.)	♦GSE	
	HTN	
	IDC	
	MSC	
	SAR	
	SCE	
	SCN	
	SSI	
1N1804B	AMR	378 -171
	CEN	
	♦GSE	
	IDC	
	SAR	
1N1805	AMR	379 - 55
	CEN	
	CRI	
	DII	
	♦GSE	
	HTN	
	IDC	
	MSC	
	SAR	
	SCE	
	SCN	
	SIEG	
	SSI	
	TRWS	
1N1805A	AMR	379 - 43
	CEN	
	DII	
	♦GSE	
	HTN	
	IDC	
	MSC	
	SAR	
	SCE	
	SCN	
	SSI	
	TRWS	
1N1805B	AMR	379 - 65
	CEN	
	♦GSE	
	IDC	
	SAR	
1N1806	AMR	379 -186
	CEN	
	CRI	
	DII	
	♦GSE	
	HTN	
	IDC	
	MSC	
	SAR	
	SCE	
	SCN	
	SIEG	
	SSI	
	TRWS	
1N1806A	AMR	379 -176
	CEN	
	DII	
	♦GSE	
	HTN	
	IDC	
	MSC	
	SAR	
	SCE	
	SCN	
	SSI	
	TRWS	
1N1806B	AMR	379 -196
	CEN	
	♦GSE	
	IDC	
	SAR	
1N1807	AMR	380 - 95
	CEN	
	CRI	
	DII	
	♦GSE	
	HTN	
	IDC	
	MSC	
	SAR	
	SCE	
	SCN	
	SIEG	
	SPE	
	SSI	
	TRWS	
1N1807A	AMR	380 - 83
	CEN	
	DII	
	♦GSE	
	HTN	
	IDC	
	MSC	
	SAR	
	SCE	
	SCN	
	SPE	
	SSI	
	TRWS	
	WAB	
1N1807B	AMR	380 -105
	CEN	
	♦GSE	
	SAR	
1N1808	AMR	381 - 16
	CEN	
	CRI	
	DII	
	♦GSE	
	HTN	
	IDC	
	MSC	
	SAR	
	SCE	
	SCN	
	SIEG	
	SSI	
	TRWS	
1N1808A	AMR	381 - 4
	CEN	
	DII	
	♦GSE	
	HTN	
	IDC	
	MSC	
	SAR	
	SCE	
	SCN	
	SSI	
	TRWS	
1N1808B	AMR	381 - 26
	CEN	
	♦GSE	
	IDC	
	SAR	
1N1809	AMR	396 - 86
	CEN	
	CRI	
	DII	
	ESP	
	ETC	
	♦GSE	
	HTN	
	IDC	
	MSC	
	SAR	
	SCE	
	SCN	
	SIEG	
	SSI	
1N1809A	AMR	396 - 75
	CEN	
	DII	
	ESP	
	ETC	
	♦GSE	
	HTN	
	IDC	
	MSC	
	SAR	
	SCE	
	SCN	
	SPE	
	SSI	
1N1809B	AMR	396 - 99
	CEN	
	♦GSE	
	IDC	
	SAR	
1N1810	AMR	396 -173
	CEN	
	CRI	
	DII	
	ESP	
	ETC	
	♦GSE	
	HTN	
	IDC	
	MSC	
	SCE	
	SCN	
	SIEG	
	SSI	
1N1810A	AMR	396 -162
	CEN	
	DII	
	ESP	
	ETC	
	♦GSE	
	HTN	
cont.next col.		
1N1810A		
(cont.)	IDC	
	MSC	
	SCE	
	SCN	
	SSI	
1N1810B	AMR	396 -186
	CEN	
	♦GSE	
	IDC	
	SAR	
1N1811	AMR	397 - 62
	CEN	
	CRI	
	DII	
	ESP	
	ETC	
	♦GSE	
	HTN	
	IDC	
	MSC	
	SCE	
	SCN	
	SIEG	
	SSI	
1N1811A	AMR	397 - 51
	CEN	
	DII	
	ESP	
	ETC	
	♦GSE	
	HTN	
	IDC	
	MSC	
	SCE	
	SCN	
	SSI	
1N1811B	AMR	397 - 75
	CEN	
	♦GSE	
	IDC	
	SAR	
1N1812	AMR	398 - 5
	CEN	
	CRI	
	DII	
	ESP	
	ETC	
	♦GSE	
	HTN	
	MSC	
	SCE	
	SCN	
	SIEG	
	SSI	
1N1812A	AMR	397 -189
	CEN	
	DII	
	ESP	
	ETC	
	♦GSE	
	HTN	
	MSC	
	SCE	
	SCN	
	SSI	
1N1812B	AMR	398 - 18
	CEN	
	♦GSE	
	SAR	
1N1813	AMR	398 - 86
	CEN	
	DII	
	ESP	
	ETC	
	♦GSE	
	HTN	
	MSC	
	SCE	
	SCN	
	SIEG	
	SSI	
1N1813A	AMR	398 - 77
	CEN	
	DII	
	ESP	
	ETC	
	♦GSE	
	HTN	
	MSC	
	SCE	
	SCN	
	SSI	
1N1813B	AMR	398 - 95
	CEN	
	♦GSE	
	SAR	
1N1814	AMR	399 - 11
	CEN	
	CRI	
	DII	
	ESP	
	ETC	
	♦GSE	
	HTN	
	MSC	
	SAR	
	SCE	
	SCN	
	SIEG	
	SPE	
	SSI	
1N1814A	AMR	399 - 2
	CEN	
	DII	
	ESP	
	ETC	
	♦GSE	
	HTN	
	MSC	
	SAR	
	SCE	
	SCN	
	SIEG	
	SSI	
1N1814B	AMR	399 - 21
	CEN	
	♦GSE	
	SAR	
1N1815	AMR	399 -108
	CEN	
	CRI	
	DII	
	ESP	
	ETC	
	♦GSE	
	HTN	
	MSC	
	SCE	
	SCN	
	SIEG	
1N1815A	AMR	399 - 99
	CEN	
	DII	
	ESP	
	ETC	
	♦GSE	
	HTN	
	MSC	
	SCE	
	SCN	
1N1815B	AMR	399 -117
	CEN	
	♦GSE	
	SAR	
1N1816	AMR	383 - 41
	CEN	
	CRI	
	DII	
	ESP	
	ETC	
	♦GSE	
	HTN	
	IDC	
	MSC	
	SAR	
	SCE	
	SCN	
	SIEG	
1N1816A	AMR	383 - 29
	CEN	
	DII	
	ESP	
	ETC	
	♦GSE	
	HTN	
	IDC	
	MSC	
	SAR	
	SCE	
	SCN	
1N1816C	♦GSE	383 - 42
	MSC	
1N1817	AMR	384 - 17
	CEN	
	CRI	
	DII	
	ESP	
	ETC	
	♦GSE	
	HTN	
	IDC	
cont.next col.		
1N1817		
(cont.)	MSC	
	SAR	
	SCE	
	SCN	
	SIEG	
1N1817A	AMR	384 - 2
	CEN	
	DII	
	ESP	
	ETC	
	♦GSE	
	HTN	
	IDC	
	MSC	
	SAR	
	SCE	
	SCN	
1N1817C	♦GSE	384 - 18
	MSC	
1N1818	AMR	384 -115
	CEN	
	DII	
	ESP	
	ETC	
	♦GSE	
	HTN	
	IDC	
	MSC	
	SAR	
	SCE	
	SCN	
	SIEG	
1N1818A	AMR	384 -102
	CEN	
	DII	
	ESP	
	ETC	
	♦GSE	
	HTN	
	IDC	
	MSC	
	SAR	
	SCE	
	SCN	
1N1818C	♦GSE	384 -116
	MSC	
1N1819	AMR	385 - 79
	CEN	
	CRI	
	DII	
	ESP	
	ETC	
	♦GSE	
	HTN	
	IDC	
	MSC	
	SAR	
	SCE	
	SCN	
	SIEG	
1N1819A	AMR	385 - 65
	CEN	
	DII	
	ESP	
	ETC	
	♦GSE	
	HTN	
	IDC	
	MSC	
	SAR	
	SCE	
	SCN	
1N1819C	♦GSE	385 - 80
	MSC	
	SPE	
1N1820	AMR	386 - 28
	CEN	
	CRI	
	DII	
	ESP	
	ETC	
	♦GSE	
	HTN	
	IDC	
	MSC	
	SAR	
	SCE	
	SCN	
	SIEG	
1N1820A	AMR	386 - 15
	CEN	
	DII	
	ESP	
	ETC	
	♦GSE	
	HTN	
	IDC	
	MSC	
	SAR	
	SCE	
	SCN	
1N1820C	♦GSE	386 - 29
	MSC	
1N1821	AMR	386 -134
	CEN	
	CRI	
	DII	
	ESP	
	ETC	
	♦GSE	
	HTN	
	IDC	
	MSC	
	SAR	
	SCE	
	SCN	
	SIEG	
1N1821A	AMR	386 -120
	CEN	
	DII	
	ESP	
	ETC	
	♦GSE	
	HTN	
	IDC	
	MSC	
	SAR	
	SCE	
	SCN	
1N1821C	♦GSE	386 -135
	MSC	
1N1822	AMR	387 - 50
	CEN	
	CRI	
	DII	
	ESP	
	ETC	
	♦GSE	
	HTN	
	IDC	
	MSC	
	SAR	
	SCE	
	SCN	
	SIEG	
	SPE	
1N1822A	AMR	387 - 37
	CEN	
	DII	
	ESP	
	ETC	
	♦GSE	
	HTN	
	IDC	
	MSC	
	SAR	
	SCE	
	SCN	
1N1822C	♦GSE	387 - 51
	MSC	
1N1823	AMR	387 -193
	CEN	
	CRI	
	DII	
	ESP	
	ETC	
	♦GSE	
	HTN	
	IDC	
	MSC	
	SAR	
	SCE	
	SCN	
	SIEG	
	SPE	
1N1823A	AMR	387 -178
	CEN	
	DII	
	ESP	
	ETC	
	♦GSE	
	HTN	
	IDC	
	MSC	
	SAR	
	SCE	
	SCN	
1N1823C	♦GSE	387 -194
	MSC	
	SPE	

Δ-Registered with JEDEC by this manufacturer

♦-Mfr's data sheet available in microfilm service

1. TYPE No. CROSS INDEX

IN TYPE NUMBER SEQUENCE

TYPE No.	MFRS	Pg&Line
1N1824	AMR	388 -109
	CEN	
	CRI	
	DII	
	ESP	
	ETC	
	♦GSE	
	HTN	
	IDC	
	MSC	
	SAR	
	SCE	
	SCN	
	SIEG	
	WAB	
1N1824A	AMR	388 - 95
	CEN	
	DII	
	ESP	
	ETC	
	♦GSE	
	HTN	
	IDC	
	MSC	
	SAR	
	SCE	
	SCN	
1N1824C,CA	GSE	388 - 96
1N1824CA	MSC	388 - 97
1N1825	CEN	389 - 16
	CRI	
	DII	
	ESP	
	ETC	
	♦GSE	
	HTN	
	IDC	
	MSC	
	SAR	
	SCE	
	SCN	
	SIEG	
	SPE	
1N1825A	CEN	389 - 2
	DII	
	ESP	
	ETC	
	♦GSE	
	HTN	
	IDC	
	MSC	
	SAR	
	SCE	
	SCN	
1N1825C	♦GSE	389 - 17
	MSC	
1N1826	CEN	389 -126
	CRI	
	DII	
	ESP	
	ETC	
	♦GSE	
	HTN	
	MSC	
	SAR	
	SCE	
	SCN	
	SIEG	
1N1826A	CEN	389 -114
	DII	
	ESP	
	ETC	
	♦GSE	
	HTN	
	MSC	
	SAR	
	SCE	
	SCN	
1N1826C	♦GSE	389 -127
	MSC	
1N1827	CEN	390 - 18
	CRI	
	DII	
	ESP	
	ETC	
	♦GSE	
	HTN	
	IDC	
	MSC	
	SAR	
	SCE	
	SCN	
	SIEG	
	SPE	
1N1827A	CEN	390 - 6
	DII	
	ESP	
	ETC	
	♦GSE	
	HTN	
	IDC	
	MSC	
	SAR	
	SCE	
	SCN	
	SPE	
1N1827C	♦GSE	390 - 19
	MSC	
1N1828	CEN	390 -126
	CRI	
	DII	
	ESP	
	ETC	
	♦GSE	
	HTN	
	IDC	
	MSC	
	SAR	
	SCE	
	SCN	
	SIEG	
	SPE	
1N1828A	CEN	390 -115
	DII	
	ESP	
	ETC	
	♦GSE	
	HTN	
	IDC	
	MSC	
	SAR	
	SCE	
	SCN	
1N1828C	♦GSE	390 -127
	MSC	
1N1829	APD	391 - 60
	CEN	
	CRI	
	DII	
	ESP	
	ETC	
	♦GSE	
	HTN	
	IDC	
	MSC	
	SAR	
	SCE	
	SCN	
	SIEG	
1N1829A	CEN	391 - 48
	DII	
	ESP	
	ETC	
	♦GSE	
	HTN	
	IDC	
	MSC	
	SAR	
	SCE	
	SCN	
1N1829C	♦GSE	391 - 61
	MSC	
1N1830	APD	391 -196
	CEN	
	CRI	
	DII	
	ESP	
	ETC	
	♦GSE	
	HTN	
	IDC	
	MSC	
	SAR	
	SCE	
	SCN	
	SIEG	
	UPI	
1N1830A	CEN	391 -185
	DII	
	ESP	
	ETC	
	♦GSE	
	HTN	
	IDC	
	MSC	
	SAR	
	SCE	
	SCN	
1N1830C	♦GSE	391 -197
	MSC	

TYPE No.	MFRS	Pg&Line
1N1831	CEN	392 -117
	CRI	
	DII	
	ESP	
	ETC	
	♦GSE	
	HTN	
	IDC	
	MSC	
	SAR	
	SCE	
	SCN	
	SIEG	
	WAB	
1N1831A	CEN	392 -104
	DII	
	ESP	
	ETC	
	♦GSE	
	HTN	
	IDC	
	MSC	
	SAR	
	SCE	
	SCN	
1N1831C	♦GSE	392 -118
	MSC	
1N1832	CEN	393 - 31
	CRI	
	DII	
	ESP	
	ETC	
	♦GSE	
	HTN	
	IDC	
	MSC	
	SAR	
	SCE	
	SCN	
	SIEG	
1N1832A	CEN	393 - 20
	DII	
	ESP	
	ETC	
	♦GSE	
	HTN	
	IDC	
	MSC	
	SAR	
	SCE	
	SCN	
	WAB	
1N1832C	♦GSE	393 - 32
	MSC	
1N1833	CEN	393 -124
	CRI	
	DII	
	ESP	
	ETC	
	♦GSE	
	HTN	
	IDC	
	MSC	
	SAR	
	SCE	
	SCN	
	SIEG	
1N1833A	CEN	393 -112
	DII	
	ESP	
	ETC	
	♦GSE	
	HTN	
	IDC	
	MSC	
	SAR	
	SCE	
	SCN	
1N1833C	♦GSE	393 -125
	MSC	
1N1834	CEN	394 - 45
	CRI	
	DII	
	ESP	
	ETC	
	♦GSE	
	HTN	
	IDC	
	MSC	
	SAR	
	SCE	
	SCN	
	SIEG	
1N1834A	CEN	394 - 33
	DII	
	ESP	
	ETC	
	♦GSE	
	HTN	
	IDC	
	MSC	
	SAR	
	SCE	
1N1834C	♦GSE	394 - 46
	MSC	
	SPE	
1N1835	CEN	394 -151
	CRI	
	DII	
	ESP	
	ETC	
	♦GSE	
	HTN	
	MSC	
	SAR	
	SCE	
	SCN	
	SIEG	
1N1835A	CEN	394 -139
	DII	
	ESP	
	ETC	
	♦GSE	
	HTN	
	MSC	
	SAR	
	SCE	
1N1835C	♦GSE	394 -152
	MSC	
1N1836	CEN	395 - 60
	CRI	
	DII	
	ESP	
	ETC	
	♦GSE	
	HTN	
	IDC	
	MSC	
	SAR	
	SCE	
	SCN	
	SIEG	
1N1836A	CEN	395 - 49
	DII	
	ESP	
	ETC	
	♦GSE	
	HTN	
	IDC	
	MSC	
	SAR	
	SCE	
1N1836C	♦GSE	395 - 61
	MSC	
1N1839	SCA	234 - 75
	SSI	
	STI	
	UPI	
	UTX	
1N1840	SCA	234 - 45
	SSI	
	STI	
	UPI	
	UTX	
1N1841	SCA	233 -214
	SSI	
	STI	
	UPI	
	UTX	
1N1842	SCA	233 -152
	SSI	
	STI	
	UPI	
	UTX	
1N1843	SCA	233 - 65
	SPE	
	SSI	
	STI	
	UPI	
	UTX	
1N1844	SCA	232 -220
	SSI	
	STI	
	UPI	
	UTX	
1N1845	SCA	232 -172
	SSI	
	STI	
	UPI	
	UTX	

TYPE No.	MFRS	Pg&Line
1N1846	SCA	232 -142
	SSI	
	STI	
	UTX	
1N1847	SCA	232 -129
	SSI	
	STI	
	UTX	
1N1848	SCA	232 -121
	SSI	
	STI	
	UTX	
1N1849	SCA	232 -118
	SSI	
	STI	
	UTX	
1N1850	SCA	232 -115
	SSI	
	STI	
	UTX	
1N1875	CEN	182 -108
	CRI	
	DII	
	♦GSE	
	HTN	
	SAR	
	SCE	
	SCN	
	SSI	
	TRWS	
1N1875A	CEN	182 - 73
	DII	
	GSE	
	SAR	
	SCE	
	SSI	
	TRWS	
1N1875B	CEN	183 - 3
	IDC	
	SSI	
1N1876	CEN	187 -202
	DII	
	♦GSE	
	HTN	
	IDC	
	SAR	
	SCE	
	SCN	
	SSI	
	TRWS	
1N1876A	CEN	187 -162
	DII	
	GSE	
	IDC	
	SAR	
	SCE	
	SSI	
	TRWS	
1N1876B	CEN	187 -154
	SSI	
1N1877	CEN	191 - 81
	CRI	
	DII	
	♦GSE	
	HTN	
	SAR	
	SCE	
	SCN	
	SSI	
	TRWS	
1N1877A	CEN	191 - 42
	DII	
	GSE	
	SAR	
	SCE	
	SPE	
	SSI	
	TRWS	
1N1877B	CEN	191 - 36
	IDC	
	SSI	
1N1878	CEN	195 - 80
	CRI	
	DII	
	♦GSE	
	HTN	
	SAR	
	SCE	
	SCN	
	SSI	
	TRWS	
1N1878A	CEN	195 - 42
	DII	
	GSE	
	SAR	
	SCE	
	SSI	
	TRWS	
1N1878B	CEN	195 - 37
	IDC	
	SSI	
1N1879	CEN	198 -188
	CRI	
	DII	
	♦GSE	
	HTN	
	SAR	
	SCE	
	SCN	
	SSI	
	TRWS	
1N1879A	CEN	198 -153
	DII	
	GSE	
	SAR	
	SCE	
	SSI	
	TRWS	
1N1879B	CEN	198 -148
	IDC	
	SSI	
1N1880	CEN	202 - 79
	CRI	
	DII	
	♦GSE	
	HTN	
	SAR	
	SCE	
	SCN	
	SSI	
	TRWS	
1N1880A	CEN	202 - 44
	DII	
	GSE	
	SAR	
	SCE	
	SSI	
	TRWS	
1N1880B	CEN	202 - 40
	IDC	
	SSI	
1N1881	CEN	205 -117
	CRI	
	DII	
	♦GSE	
	HTN	
	SAR	
	SCE	
	SCN	
	SSI	
	TRWS	
1N1881A	CEN	205 - 81
	DII	
	GSE	
	SAR	
	SCE	
	SSI	
	TRWS	
1N1881B	CEN	205 - 76
	IDC	
	SSI	
1N1882	CEN	208 -135
	CRI	
	DII	
	♦GSE	
	HTN	
	SAR	
	SCE	
	SCN	
	SSI	
	TRWS	
1N1882A	CEN	208 - 99
	DII	
	GSE	
	SAR	
	SCE	
	SSI	
	TRWS	
1N1882B	CEN	208 - 96
	IDC	
	SSI	

TYPE No.	MFRS	Pg&Line
1N1883	CEN	211 - 27
	CRI	
	DII	
	♦GSE	
	HTN	
	SAR	
	SCE	
	SCN	
	SSI	
	TRWS	
1N1883A	CEN	211 - 2
	DII	
	GSE	
	SAR	
	SCE	
	SSI	
	TRWS	
1N1883B	CEN	211 -123
	IDC	
	SSI	
1N1884	CEN	213 - 52
	DII	
	♦GSE	
	HTN	
	SAR	
	SCE	
	SCN	
	SSI	
1N1884A	CEN	213 - 31
	DII	
	GSE	
	SAR	
	SCE	
	SSI	
1N1884B	CEN	213 - 28
	IDC	
	SSI	
1N1885	CEN	215 - 36
	CRI	
	DII	
	♦GSE	
	HTN	
	SAR	
	SCE	
	SCN	
	SSI	
1N1885A	CEN	215 - 15
	DII	
	GSE	
	SAR	
	SCE	
	SSI	
1N1885B	CEN	215 -131
	IDC	
	SSI	
1N1886	CEN	217 - 22
	CRI	
	DII	
	♦GSE	
	HTN	
	SAR	
	SCE	
	SCN	
	SPE	
	SSI	
1N1886A	CEN	217 - 2
	DII	
	GSE	
	SAR	
	SCE	
	SSI	
1N1886B	CEN	217 -112
	IDC	
	SSI	
1N1887	CEN	218 -184
	CRI	
	DII	
	♦GSE	
	HTN	
	SAR	
	SCE	
	SCN	
	SSI	
1N1887A	CEN	218 -164
	DII	
	GSE	
	SAR	
	SCE	
	SSI	
1N1887B	CEN	219 - 89
	IDC	
	SSI	
1N1888	CEN	220 -124
	CRI	
	DII	
	♦GSE	
	HTN	
	SAR	
	SCE	
	SCN	
	SSI	
1N1888A	CEN	220 -105
	DII	
	GSE	
	SAR	
	SCE	
	SSI	
1N1888B	CEN	220 - 47
	SSI	
1N1889	CEN	222 -110
	CRI	
	DII	
	♦GSE	
	HTN	
	IDC	
	SSI	
1N1889A	CEN	222 -102
	DII	
	GSE	
	IDC	
	SSI	
1N1889B	CEN	222 - 97
	DII	
	IDC	
	SSI	
1N1890	CEN	223 -150
	CRI	
	DII	
	♦GSE	
	HTN	
	IDC	
	SCN	
	SSI	
1N1890A	CEN	223 -149
	DII	
	GSE	
	IDC	
	SCN	
	SSI	
1N1890B	CEN	223 -148
	DII	
	IDC	
1N1891	CRI	380 - 96
	SSI	
1N1891A	SSI	380 - 84
1N1892	CRI	381 -124
	SSI	
1N1892A	SSI	381 -109
1N1893	CRI	382 -133
	SPE	
	SSI	
1N1893A	SSI	382 -118
1N1894	IDC	384 - 19
	SSI	
1N1894A	IDC	384 - 3
	SSI	
1N1895	CRI	385 - 81
	SSI	
1N1895A	SSI	385 - 66
1N1896	CRI	386 -136
	SSI	
1N1896A	SSI	386 -121
1N1897	SSI	387 -195
1N1897A	SSI	387 -179
1N1898	IDC	389 - 18
	SSI	
1N1898A	IDC	389 - 3
	SSI	

TYPE No.	MFRS	Pg&Line
1N1899	CRI	390 - 20
	IDC	
	SSI	
1N1899A	IDC	390 - 7
	SSI	
1N1900	CRI	391 - 62
	SSI	
1N1900A	SSI	391 - 49
1N1901	SSI	392 -119
1N1901A	SSI	392 -105
1N1902	CRI	393 -126
	IDC	
	SSI	
1N1902A	IDC	393 -113
	SSI	
1N1903	SSI	394 -153
1N1903A	CRI	394 -140
	SSI	
1N1904	CRI	395 -168
	SSI	
1N1904A	CRI	395 -155
	SSI	
1N1907	CEN	283 - 70
	CRI	
	DII	
	EDL	
	HTN	
	IDC	
	SCN	
	SSI	
	UPI	
1N1908	CEN	283 -116
	CRI	
	DII	
	EDL	
	HTN	
	SCN	
	SPE	
	SSI	
	UPI	
1N1909	CEN	283 -181
	CRI	
	DII	
	EDL	
	HTN	
	SCN	
	SSI	
	UPI	
1N1910	CEN	284 - 27
	CRI	
	DII	
	EDL	
	HTN	
	SCN	
	SSI	
	UPI	
1N1911	CEN	284 - 68
	CRI	
	DII	
	EDL	
	HTN	
	SCN	
	SSI	
	UPI	
1N1912	CEN	284 -134
	CRI	
	DII	
	EDL	
	HTN	
	IDC	
	SCN	
	SSI	
1N1913	CEN	284 -170
	CRI	
	DII	
	EDL	
	HTN	
	SCN	
	SSI	
1N1914	CEN	285 - 15
	CRI	
	DII	
	EDL	
	HTN	
	IDC	
	SCN	
	SPE	
	SSI	
1N1915	CEN	285 - 35
	CRI	
	DII	
	EDL	
	HTN	
	SCN	
	SSI	
1N1916	CEN	285 - 83
	CRI	
	DII	
	EDL	
	HTN	
	SCN	
	SPE	
	SSI	
1N1917	IDC	290 - 20
	SSI	
1N1918	SSI	290 - 25
1N1919	SSI	290 - 37
1N1920	SSI	290 - 45
1N1921	SSI	290 - 51
1N1922	SSI	290 - 60
1N1923	SSI	290 - 64
1N1924	SSI	290 - 72
1N1925	SSI	290 - 74
1N1926	SSI	290 - 77
1N1927	CEN	167 -123
	CODI	
	CRI	
	IDC	
	SCE	
	SSI	
1N1927A	CEN	167 -121
	CODI	
	IDC	
	SCE	
	SSI	
1N1927B	CEN	167 -120
	CODI	
	IDC	
	SCE	
	SSI	
1N1928	CEN	169 -161
	CODI	
	CRI	
	IDC	
	SCE	
	SSI	
1N1928A	CEN	169 -158
	CODI	
	IDC	
	SCE	
	SSI	
1N1928B	CEN	169 -157
	CODI	
	IDC	
	SCE	
	SSI	
1N1929	CEN	172 -111
	CODI	
	CRI	
	IDC	
	SCE	
	SSI	
1N1929A	CEN	172 -108
	CODI	
	IDC	
	SCE	
	SSI	
1N1929B	CEN	172 -106
	CODI	
	IDC	
	SCE	
	SSI	
1N1930	CEN	177 -150
	CODI	
	CRI	
	IDC	
	SCE	
	SSI	

Δ-Registered with JEDEC by this manufacturer

♦-Mfr's data sheet available in microfilm service

1. TYPE No. CROSS INDEX

IN TYPE NUMBER SEQUENCE

TYPE No.	MFRS	Pg&Line
1N1930A	CEN	177 -146
	CODI	
	IDC	
	SCE	
	SSI	
1N1930B	CEN	177 -144
	CODI	
	IDC	
	SCE	
	SSI	
1N1931	CEN	181 -122
	CODI	
	IDC	
	SCE	
	SSI	
1N1931A	CEN	181 -118
	CODI	
	IDC	
	SCE	
	SPE	
	SSI	
1N1931B	CEN	181 -116
	CODI	
	IDC	
	SCE	
	SSI	
1N1932	CEN	186 -200
	CODI	
	CRI	
	IDC	
	SCE	
	SSI	
1N1932A	CEN	186 -196
	CODI	
	IDC	
	SCE	
	SSI	
1N1932B	CEN	186 -194
	CODI	
	IDC	
	SCE	
	SSI	
1N1933	CEN	190 -112
	CODI	
	CRI	
	SCE	
	SPE	
	SSI	
1N1933A	CEN	190 -109
	CODI	
	SCE	
	SPE	
	SSI	
1N1933B	CEN	190 -106
	CODI	
	SCE	
	SSI	
1N1934	CEN	194 -119
	CODI	
	CRI	
	SCE	
	SSI	
1N1934A	CEN	194 -117
	CODI	
	SCE	
	SSI	
1N1934B	CEN	194 -115
	CODI	
	SCE	
	SSI	
1N1935	CEN	198 - 28
	CODI	
	CRI	
	SCE	
	SSI	
1N1935A	CEN	198 - 26
	CODI	
	SCE	
	SSI	
1N1935B	CEN	198 - 24
	CODI	
	SCE	
	SSI	
1N1936	CEN	201 -134
	CRI	
	SCE	
	SSI	
1N1936A	CEN	201 -132
	SCE	
	SSI	
1N1936B	CEN	201 -129
	SCE	
	SSI	
1N1937	CEN	204 -184
	CRI	
	SCE	
	SSI	
1N1937A	CEN	204 -181
	SCE	
	SSI	
1N1937B	CEN	204 -180
	SCE	
	SSI	
1N1938	CEN	207 -204
	CRI	
	SCE	
	SSI	
1N1938A	CEN	207 -201
	SCE	
1N1938B	CEN	207 -200
	SCE	
1N1939	CEN	210 -129
	SCE	
	SSI	
1N1939A	CEN	210 -126
	SCE	
	SSI	
1N1939B	CEN	210 -125
	SCE	
	SSI	
1N1940	CEN	212 -162
	CRI	
	SCE	
	SSI	
1N1940A	CEN	212 -160
	SCE	
	SSI	
1N1940B	CEN	212 -159
	SCE	
	SSI	
1N1941	CEN	214 -161
	CRI	
	SCE	
	SSI	
1N1941A	CEN	214 -159
	SCE	
	SSI	
1N1941B	CEN	214 -158
	SCE	
1N1942	CEN	216 -145
	CRI	
	SCE	
	SSI	
1N1942A	CEN	216 -143
	SCE	
	SSI	
1N1942B	CEN	216 -142
	SCE	
	SSI	
1N1943	CEN	218 -122
	CRI	
	SCE	
	SSI	
1N1943A	CEN	218 -121
	SCE	
	SSI	
1N1943B	CEN	218 -120
	SCE	
	SSI	
1N1944	CEN	220 - 65
	CRI	
	SCE	
	SSI	
1N1944A	CEN	220 - 64
	SCE	
	SSI	
1N1944B	CEN	220 - 63
	SCE	
	SSI	
1N1945	CEN	221 -180
	CRI	
	IDC	
	SCE	
1N1945A	CEN	221 -179
	IDC	
	SCE	
1N1945B	CEN	221 -178
	IDC	
	SCE	
1N1946	CEN	223 -145
	CRI	
	SCE	
1N1946A	CEN	223 -144
	SCE	
1N1946B	CEN	223 -143
	SCE	
1N1947	CEN	225 -115
	CRI	
	SCE	
1N1947A	CEN	225 -114
	SCE	
1N1947B	CEN	225 -113
	SCE	
1N1948	CRI	227 - 69
	IDC	
	SCE	
1N1948A	SCE	227 - 67
1N1948B	SCE	227 - 65
1N1949	CRI	227 -106
	IDC	
	SCE	
1N1949A	SCE	227 -105
1N1949B	SCE	227 -104
1N1950	CRI	227 -143
	IDC	
	SCE	
1N1950A	SCE	227 -142
1N1950B	SCE	227 -141
1N1951	IDC	227 -181
	SCE	
1N1951A	SCE	227 -180
1N1951B	SCE	227 -179
1N1952	CEN	227 -200
	IDC	
	SCE	
1N1952A	SCE	227 -199
1N1952B	SCE	227 -198
1N1953	IDC	228 - 2
	SCE	
1N1953A	SCE	228 - 1
1N1953B	SCE	227 -209
1N1954	APD	168 - 81
	CEN	
	CODI	
	CRI	
	IDC	
	SCE	
1N1954A	APD	168 - 80
	CEN	
	CODI	
	IDC	
	SCE	
1N1954B	APD	168 - 79
	CEN	
	CODI	
	IDC	
	SCE	
1N1955	APD	170 - 15
	CEN	
	CODI	
	CRI	
	IDC	
	SCE	
1N1955A	APD	169 -194
	CEN	
	CODI	
	IDC	
	SCE	
1N1955B	APD	169 -178
	CEN	
	CODI	
	IDC	
	SCE	
1N1956	APD	173 -134
	CEN	
	CODI	
	CRI	
	IDC	
	SCE	
1N1956A	APD	173 -133
	CEN	
	CODI	
	IDC	
	SCE	
1N1956B	APD	173 -130
	CEN	
	CODI	
	IDC	
	SCE	
1N1957	APD	179 - 5
	CEN	
	CODI	
	CRI	
	IDC	
	SCE	
1N1957A	APD	179 - 4
	CEN	
	CODI	
	IDC	
	SCE	
1N1957B	APD	179 - 1
	CEN	
	CODI	
	IDC	
	SCE	
1N1958	APD	183 - 1
	CEN	
	CODI	
	CRI	
	IDC	
	SCE	
1N1958A	APD	182 -206
	CEN	
	CODI	
	IDC	
	SCE	
1N1958B	APD	182 -193
	CEN	
	CODI	
	IDC	
	SCE	
1N1959	APD	186 -131
	CEN	
	CODI	
	CRI	
	IDC	
	SCE	
1N1959A	APD	186 -130
	CEN	
	CODI	
	IDC	
	SCE	
1N1959B	APD	186 -127
	CEN	
	CODI	
	IDC	
	SCE	
1N1960	APD	190 -178
	CEN	
	CODI	
	CRI	
	IDC	
	SCE	
1N1960A	APD	190 -152
	CEN	
	CODI	
	IDC	
	SCE	
1N1960B	APD	190 -141
	CEN	
	CODI	
	IDC	
	SCE	
1N1961	APD	194 - 78
	CEN	
	CODI	
	CRI	
	IDC	
	SCE	
1N1961A	APD	194 - 77
	CEN	
	CODI	
	IDC	
	SCE	
1N1961B	APD	194 - 76
	CEN	
	CODI	
	SCE	
1N1962	APD	198 - 79
	CEN	
	CODI	
	IDC	
	SCE	
1N1962A	APD	198 - 60
	CEN	
	CODI	
	CRI	
	IDC	
	SCE	
1N1962B	APD	198 - 50
	CEN	
	CODI	
	IDC	
	SCE	
1N1963	APD	201 -183
	CEN	
	CRI	
	IDC	
	SCE	
1N1963A	APD	201 -165
	CEN	
	IDC	
	SCE	
1N1963B	APD	201 -155
	CEN	
	IDC	
	SCE	
1N1964	APD	205 - 17
	CEN	
	CRI	
	IDC	
	SCE	
1N1964A	APD	204 -208
	CEN	
	IDC	
	SCE	
1N1964B	APD	204 -201
	CEN	
	IDC	
	SCE	
1N1965	APD	208 - 40
	CEN	
	CRI	
	IDC	
	SCE	
1N1965A	APD	208 - 21
	CEN	
	IDC	
	SCE	
1N1965B	APD	208 - 13
	CEN	
	IDC	
	SCE	
1N1966	CEN	211 -117
	SCE	
1N1967	CEN	212 -186
	SCE	
1N1968	CEN	215 -129
	SCE	
1N1969	CEN	217 -111
	SCE	
1N1970	CEN	219 - 69
	SCE	
1N1981	AMX	167 -118
	CODI	
	CRI	
	IDC	
	SCA	
	SCE	
	SSI	
	STI	
1N1981A	AMX	167 -116
	CODI	
	CRI	
	IDC	
	SCA	
	SCE	
	SSI	
	STI	
1N1981B	AMX	167 -115
	CODI	
	IDC	
	SCE	
	SSI	
	STI	
1N1982	AMX	169 -156
	CODI	
	CRI	
	IDC	
	SCA	
	SCE	
	SSI	
	STI	
1N1982A	AMX	169 -153
	CODI	
	IDC	
	SCA	
	SCE	
	SSI	
	STI	
1N1982B	AMX	169 -152
	CODI	
	IDC	
	SCE	
	SSI	
	STI	
1N1983	AMX	172 -104
	CODI	
	CRI	
	IDC	
	SCA	
	SCE	
	SSI	
	STI	
1N1983A	AMX	172 -101
	CODI	
	IDC	
	SCA	
	SCE	
	SSI	
	STI	
1N1983B	AMX	172 -100
	CODI	
	IDC	
	SCE	
	SSI	
	STI	
1N1984	AMX	177 -143
	CODI	
	CRI	
	IDC	
	SCA	
	SCE	
	SSI	
	STI	
1N1984A	AMX	177 -141
	CODI	
	IDC	
	SCA	
	SCE	
	SSI	
	STI	
1N1984B	AMX	177 -140
	CODI	
	IDC	
	SCE	
	SSI	
	STI	
1N1985	AMX	181 -114
	CODI	
	CRI	
	IDC	
	SCA	
	SCE	
	SSI	
	STI	
1N1985A	AMX	181 -111
	CODI	
	IDC	
	SCA	
	SCE	
	SSI	
	STI	
1N1985B	AMX	181 -110
	CODI	
	IDC	
	SCE	
	SSI	
	STI	
1N1986	AMX	186 -192
	CODI	
	CRI	
	IDC	
	SCA	
	SCE	
	SSI	
	STI	
1N1986A	AMX	186 -190
	CODI	
	IDC	
	SCA	
	SCE	
	SSI	
	STI	
1N1986B	AMX	186 -189
	CODI	
	IDC	
	SCE	
	SSI	
	STI	
1N1987	AMX	190 -104
	CODI	
	CRI	
	IDC	
	SCA	
	SCE	
	SPE	
	SSI	
	STI	
1N1987A	AMX	190 -102
	CODI	
	IDC	
	SCA	
	SCE	
	SSI	
	STI	
1N1987B	AMX	190 -101
	CODI	
	IDC	
	SCE	
	SSI	
	STI	
1N1988	AMX	194 -113
	CODI	
	CRI	
	IDC	
	SCA	
	SCE	
	SPE	
	SSI	
	STI	
1N1988A	AMX	194 -111
	CODI	
	IDC	
	SCA	
	SCE	
	SSI	
	STI	
1N1988B	AMX	194 -110
	CODI	
	IDC	
	SCE	
	SSI	
	STI	
1N1989	AMX	198 - 22
	CODI	
	CRI	
	IDC	
	SCA	
	SCE	
	SSI	
	STI	
1N1989A	AMX	198 - 20
	CODI	
	IDC	
	SCA	
	SCE	
	SSI	
	STI	
1N1989B	AMX	198 - 19
	CODI	
	IDC	
	SCE	
	SSI	
	STI	
1N1990	AMX	201 -127
	CRI	
	IDC	
	SCA	
	SCE	
	SSI	
	STI	
1N1990A	AMX	201 -125
	IDC	
	SCA	
	SCE	
	SSI	
	STI	
1N1990B	AMX	201 -124
	IDC	
	SCE	
	SSI	
	STI	
1N1991	AMX	204 -179
	CRI	
	IDC	
	SCA	
	SCE	
	SSI	
	STI	
1N1991A	AMX	204 -177
	IDC	
	SCA	
	SCE	
	SSI	
	STI	
1N1991B	AMX	204 -176
	IDC	
	SCE	
	SSI	
	STI	
1N1992	AMX	207 -199
	CRI	
	IDC	
	SCA	
	SCE	
	SSI	
	STI	
1N1992A	AMX	207 -197
	IDC	
	SCA	
	SCE	
	SSI	
	STI	
1N1992B	AMX	207 -196
	IDC	
	SCE	
	SSI	
	STI	
1N1993	AMX	210 -124
	CRI	
	IDC	
	SCA	
	SCE	
	SSI	
	STI	
1N1993A	AMX	210 -123
	IDC	
	SCA	
	SCE	
	SSI	
	STI	
1N1993B	AMX	210 -122
	IDC	
	SCE	
	SSI	
	STI	
1N1994	AMX	212 -158
	CRI	
	IDC	
	SCA	
	SCE	
	SSI	
	STI	
1N1994A	AMX	212 -157
	IDC	
	SCA	
	SCE	
	SSI	
	STI	
1N1994B	AMX	212 -156
	IDC	
	SCE	
	SSI	
	STI	
1N1995	AMX	214 -157
	CRI	
	IDC	
	SCA	
	SCE	
	SSI	
	STI	
1N1995A	AMX	214 -156
	IDC	
	SCA	
	SCE	
	SSI	
	STI	
1N1995B	AMX	214 -155
	IDC	
	SCE	
	SSI	
	STI	
1N1996	AMX	216 -141
	CRI	
	IDC	
	SCA	
	SCE	
	SSI	
	STI	
1N1996A	AMX	216 -140
	IDC	
	SCA	
	SCE	
	SSI	
	STI	
1N1996B	AMX	216 -139
	IDC	
	SCE	
	SSI	
	STI	
1N1997	AMX	218 -119
	CRI	
	IDC	
	SCA	
	SCE	
	SPE	
	SSI	
	STI	
1N1997A	AMX	218 -118
	IDC	
	SCA	
	SCE	
	SSI	
	STI	
1N1997B	AMX	218 -117
	IDC	
	SCE	
	SSI	
	STI	
1N1998	AMX	220 - 62
	CRI	
	SCE	
	SSI	
	STI	
1N1998A	AMX	220 - 61
	SCE	
	SSI	
	STI	
1N1998B	AMX	220 - 60
	SCE	
	SSI	
	STI	
1N1999	AMX	221 -177
	CRI	
	SSI	
	STI	
1N1999A	AMX	221 -176
	SSI	
	STI	
1N1999B	AMX	221 -175
	SSI	
	STI	
1N2000	AMX	223 -158
	SSI	
	STI	
1N2000A	AMX	223 -157
	CRI	
	SSI	
1N2000B	AMX	223 -156
	SSI	
	STI	
1N2001	AMX	225 -112
	SSI	
	STI	
1N2001A	AMX	225 -111
	SSI	
	STI	
1N2001B	AMX	225 -110
	CRI	
	SSI	
	STI	
1N2002	SSI	227 - 70
	STI	
1N2002A	SSI	227 - 68
	STI	
1N2002B	SSI	227 - 66
	STI	
1N2003	STI	227 -103
1N2003A	STI	227 -102
1N2003B	STI	227 -101
1N2004	STI	227 -140
1N2004A	STI	227 -139
1N2004B	STI	227 -138
1N2005	STI	227 -174
1N2005A	STI	227 -173
1N2005B	STI	227 -172
1N2006	STI	227 -197
1N2006A	STI	227 -196
1N2006B	STI	227 -195
1N2007	STI	227 -208
1N2007A	STI	227 -207
1N2007B	STI	227 -206
1N2008	CEN	395 -169
	CRI	
	ESP	
	ETC	
	♦GSE	
	HTN	
	IDC	
	MSC	
	SAR	
	SCN	
	SIEG	
	SSI	
1N2008A	CEN	395 -156
	ESP	
	ETC	
	GSE	
	HTN	
	IDC	
	MSC	
	SAR	
	SCN	
	SSI	
1N2008C	GSE	395 -170
	MSC	
1N2009	CEN	396 - 87
	CRI	
	ESP	
	ETC	
	♦GSE	
	HTN	
	IDC	
	MSC	
	SAR	
	SCN	
	SIEG	
	SSI	

Δ-Registered with JEDEC by this manufacturer

♦-Mfr's data sheet available in microfilm service

1. TYPE No. CROSS INDEX

IN TYPE NUMBER SEQUENCE

TYPE No.	MFRS	Pg&Line
1N2009A	CEN	396 - 76
	ESP	
	ETC	
	GSE	
	HTN	
	IDC	
	MSC	
	SAR	
	SCN	
	SSI	
1N2009C	GSE	396 - 88
	MSC	
1N2010	CEN	396 -174
	CRI	
	ESP	
	ETC	♦GSE
	HTN	IDC
	MSC	SAR
	SCN	SIEG
	SSI	
1N2010A	CEN	396 -163
	ESP	
	ETC	
	GSE	
	HTN	
	IDC	
	MSC	
	SAR	
	SCN	
	SSI	
1N2010C	GSE	396 -175
	MSC	
1N2011	CEN	397 - 63
	CRI	
	ESP	
	ETC	♦GSE
	HTN	IDC
	MSC	SAR
	SCN	SIEG
	SSI	
1N2011A	CEN	397 - 52
	ESP	
	ETC	
	GSE	
	HTN	
	IDC	
	MSC	
	SAR	
	SCN	
	SSI	
1N2011C	GSE	397 - 64
	MSC	
1N2012	CEN	398 - 6
	CRI	
	ESP	
	ETC	♦GSE
	HTN	MSC
	SAR	SCN
	SIEG	SSI
1N2012A	CEN	397 -190
	ESP	
	ETC	
	GSE	
	HTN	
	MSC	
	SAR	
	SCN	
	SSI	
1N2012C	GSE	398 - 7
	MSC	
1N2013	CEN	275 - 43
	CRI	
	DII	
	EDL	
	HTN	
	IDC	
	SCN	
	SPE	
	SSI	
1N2014	CEN	275 - 59
	DII	
	HTN	
	IDC	
	SCN	
	SSI	
1N2015	CEN	275 - 65
	DII	
	HTN	
	IDC	
	SCN	
	SSI	
1N2016	CEN	275 - 80
	DII	
	HTN	
	IDC	
	SCN	
	SSI	
1N2017	CEN	275 - 84
	CRI	
	DII	
	HTN	
	IDC	
	SCN	
	SSI	
1N2018	CEN	275 - 98
	DII	
	HTN	
	SCN	
	SSI	
1N2019	CEN	275 -100
	DII	
	HTN	
	SCN	
	SSI	
1N2020	CEN	275 -114
	CRI	
	DII	
	HTN	
	IDC	
	SCN	
	SSI	
1N2021	ASI	294 - 27
	CEN	
	COO	
	CRI	
	EDL	
	ETC	
	HTN	
	IDC	
	SAR	
	SCN	
	SOD	
	SPE	
	SSI	
	UPI	
	WAB	
1N2022	ASI	294 - 55
	CEN	
	COO	
	CRI	
	EDL	
	ETC	
	HTN	
	IDC	
	SAR	
	SCN	
	SOD	
	SSI	
	UPI	
	WAB	
1N2023	ASI	294 - 71
	CEN	
	COO	
	CRI	
	EDL	
	ETC	
	HTN	
	IDC	
	SAR	
	SCN	
	SOD	
	SSI	
	UPI	
	WAB	
1N2024	ASI	294 - 74
	♦CEN	
	COO	
	CRI	
	EDL	
	ETC	
	HTN	
	IDC	
	SAR	
	SCN	
	SOD	
	SSI	
	UPI	
	WAB	

TYPE No.	MFRS	Pg&Line
1N2025	ASI	294 -103
	CEN	
	COO	
	CRI	
	EDL	
	ETC	
	HTN	
	IDC	
	SAR	
	SCN	
	SOD	
	SPE	
	SSI	
	UPI	
	WAB	
1N2026	ASI	280 - 36
	CEN	
	CRI	
	EDL	
	ETC	
	HTN	
	IDC	
	SCN	
	SOD	
	SPE	
	SSI	
	UPI	
1N2027	ASI	280 -220
	CEN	
	CRI	
	EDL	
	ETC	
	HTN	
	IDC	
	SCN	
	SOD	
	SSI	
	UPI	
1N2028	ASI	281 - 29
	CEN	
	CRI	
	EDL	
	ETC	
	HTN	
	IDC	
	SCN	
	SOD	
	SSI	
	UPI	
1N2029	ASI	281 -125
	CEN	
	CRI	
	EDL	
	ETC	
	HTN	
	IDC	
	SCN	
	SOD	
	SSI	
	UPI	
1N2030	ASI	281 -150
	CEN	
	CRI	
	EDL	
	ETC	
	HTN	
	IDC	
	SCN	
	SOD	
	SSI	
1N2031	ASI	282 - 11
	CEN	
	CRI	
	EDL	
	ETC	
	HTN	
	IDC	
	SCN	
	SOD	
	SSI	
1N2032	APD	170 -181
	CEN	
	CRI	
	♦GSE	
	HTN	
	IDC	
	SCN	
	SLD	
	SSI	
	SST	
	TRWS	
1N2032A	APD	169 -113
	CEN	
1N2033	APD	173 -159
	CEN	
	CRI	
	♦GSE	
	HTN	
	IDC	
	SAR	
	SCN	
	SLD	
	SSI	
	SST	
	TRWS	
1N2033A	APD	172 - 80
	CEN	
	IDC	
	SPE	
1N2034	APD	179 - 65
	CEN	
	CRI	
	♦GSE	
	HTN	
	IDC	
	SAR	
	SCN	
	SLD	
	SPE	
	SSI	
	SST	
	TRWS	
1N2034A	APD	177 - 68
	CEN	
1N2035	APD	183 -196
	CEN	
	CRI	
	♦GSE	
	HTN	
	IDC	
	SAR	
	SCN	
	SLD	
	SPE	
	SSI	
	TRWS	
1N2035A	APD	181 - 82
	CEN	
1N2036	APD	188 -119
	CEN	
	♦GSE	
	HTN	
	IDC	
	SAR	
	SCN	
	SLD	
	SSI	
	SST	
	TRWS	
1N2036A	APD	187 -133
	CEN	
	CRI	
	IDC	
1N2037	APD	192 - 22
	CEN	
	♦GSE	
	IDC	
	SAR	
	SCN	
	SLD	
	SSI	
	SST	
	TRWS	
1N2037A	APD	191 - 21
	CEN	
	CRI	
	IDC	
1N2038	APD	196 - 6
	CEN	
	CRI	
	♦GSE	
	HTN	
	IDC	
	SAR	
	SCN	
	SLD	
	SSI	
	SST	
	TRWS	
1N2038A	APD	195 - 25
	CEN	
	IDC	
1N2039	APD	199 -138
	CEN	
	CRI	
	♦GSE	
	HTN	
	IDC	
	SAR	
	SCN	
	SLD	
cont.next col.		

TYPE No.	MFRS	Pg&Line
1N2039		
(cont.)	SPE	
	SSI	
	SST	
	TRWS	
1N2039A	APD	198 -135
	CEN	
	IDC	
1N2040	APD	203 - 20
	CEN	
	CRI	
	♦GSE	
	HTN	
	IDC	
	SAR	
	SCN	
	SLD	
	SSI	
	SST	
	TRWS	
1N2040A	APD	202 - 28
	CEN	
	IDC	
1N2041	CEN	378 - 52
	CRI	
	DII	
	♦GSE	
	HTN	
	IDC	
	MSC	
	SCN	
	SIEG	
	SSI	
1N2041A	CEN	169 -105
	SCN	
	SSI	
1N2041B	CEN	170 -199
	SSI	
1N2041C	CEN	378 - 53
	SSI	
1N2042	CEN	378 -143
	CRI	
	DII	
	♦GSE	
	HTN	
	IDC	
	MSC	
	SAR	
	SCN	
	SIEG	
	SSI	
	UPI	
1N2042A	CEN	378 - 93
	SCN	
	SSI	
1N2042B	CEN	173 -194
	IDC	
	SSI	
1N2042C	CEN	378 -142
	SSI	
1N2043	CEN	379 -106
	CRI	
	DII	
	♦GSE	
	HTN	
	IDC	
	MSC	
	SAR	
	SCN	
	SIEG	
	SPE	
	SSI	
	TRWS	
1N2043A	CEN	176 -199
	SCN	
	SSI	
	TRWS	
1N2043B	CEN	179 - 15
	SSI	
	TRWS	
1N2043C	CEN	179 -127
	IDC	
	SSI	
	TRWS	
1N2044	CEN	380 -149
	CRI	
	DII	
	♦GSE	
	HTN	
	IDC	
	MSC	
	SAR	
	SCN	
	SIEG	
	SSI	
	TRWS	
1N2044A	CEN	181 - 62
	SCN	
	SSI	
	TRWS	
1N2044B	CEN	183 - 71
	SSI	
	TRWS	
1N2044C	CEN	184 - 9
	SSI	
	TRWS	
1N2045	CEN	381 -174
	CRI	
	DII	
	♦GSE	
	HTN	
	IDC	
	MSC	
	SAR	
	SCN	
	SIEG	
	SSI	
	TRWS	
1N2045A	CEN	381 -110
	IDC	
	SCN	
	SSI	
	TRWS	
1N2045B	CEN	188 -149
	IDC	
	SSI	
	TRWS	
1N2045C	CEN	381 -173
	IDC	
	SSI	
	TRWS	
1N2046	CEN	382 -184
	CRI	
	DII	
	♦GSE	
	HTN	
	MSC	
	SAR	
	SCN	
	SIEG	
	SPE	
	SSI	
	TRWS	
1N2046A	CEN	190 - 92
	IDC	
	SCN	
	SSI	
	TRWS	
1N2046B	CEN	192 - 88
	SSI	
	TRWS	
1N2046C	CEN	193 -160
	IDC	
	SSI	
	TRWS	
1N2047	CEN	384 - 70
	CRI	
	DII	
	♦GSE	
	HTN	
	IDC	
	MSC	
	SAR	
	SCN	
	SIEG	
	SPE	
	SSI	
	TRWS	
1N2047A	CEN	194 -102
	IDC	
	SCN	
	SSI	
	TRWS	
1N2047B	CEN	196 - 18
	IDC	
	SSI	
	TRWS	

TYPE No.	MFRS	Pg&Line
1N2047C	CEN	197 - 92
	SSI	
	TRWS	
1N2048	CEN	385 -152
	CRI	
	DII	
	♦GSE	
	HTN	
	IDC	
	MSC	
	SAR	
	SCN	
	SIEG	
	SPE	
	SSI	
	TRWS	
	WAB	
1N2048A	CEN	198 - 10
	IDC	
	SCN	
	SSI	
	TRWS	
1N2048B	CEN	199 -106
	SSI	
	TRWS	
1N2048C	CEN	200 - 23
	SSI	
	TRWS	
1N2049	CEN	386 -190
	CRI	
	DII	
	♦GSE	
	HTN	
	IDC	
	MSC	
	SAR	
	SCN	
	SIEG	
	SSI	
	TRWS	
	WAB	
1N2049A	CEN	201 -115
	IDC	
	SCN	
	SSI	
	TRWS	
1N2049B	CEN	203 - 35
	SSI	
	TRWS	
1N2049C	CEN	204 -148
	IDC	
	SSI	
	TRWS	
1N2054	ASI	309 - 92
	CEI	
	CEN	
	COO	
	EDL	
	ETC	
	HTN	
	♦INR	
	INRJ	
	NJS	
	PRX	
	SAR	
	♦SSI	
	UPI	
	WAB	
1N2055	Δ♦INR	309 -107
	ASI	
	CEI	
	CEN	
	COO	
	EDL	
	ETC	
	HSE	
	HTN	
	INRJ	
	NJS	
	PRX	
	SAR	
	SPE	
	♦SSI	
	SSY	
	STI	
	UPI	
	WAB	
1N2056	ASI	309 -112
	CEI	
	CEN	
	COO	
	CRI	
	EDL	
	ETC	
	HSE	
	HTN	
	IDC	
	INRJ	
	PRX	
	SAR	
	♦SSI	
	UPI	
	WAB	
1N2057	Δ♦INR	309 -126
	ASI	
	CEI	
	CEN	
	COO	
	EDL	
	ETC	
	HSE	
	HTN	
	IDC	
	INRJ	
	PRX	
	SAR	
	♦SSI	
	TIC	
	UPI	
	WAB	
1N2058	ASI	309 -133
	CEN	
	COO	
	CRI	
	EDL	
	ETC	
	HSE	
	HTN	
	♦IDC	
	INRJ	
	PRX	
	SAR	
	♦SSI	
	UPI	
	WAB	
1N2059	Δ♦INR	309 -146
	ASI	
	CEN	
	COO	
	CRI	
	EDL	
	ETC	
	HSE	
	HTN	
	IDC	
	INRJ	
	PRX	
	SAR	
	♦SSI	
	UPI	
	WAB	
1N2060	ASI	309 -151
	CEN	
	COO	
	CRI	
	EDL	
	ETC	
	HSE	
	HTN	
	INRJ	
	PRX	
	SAR	
	♦SSI	
	WAB	
1N2061	Δ♦INR	309 -167
	ASI	
	CEI	
	CEN	
	COO	
	CRI	
	EDL	
	ETC	
	HSE	
	HTN	
	♦IDC	
	INRJ	
	PRX	
	SAR	
	♦SSI	
	UPI	
	WAB	
1N2062	ASI	309 -172
	CEN	
	COO	
	CRI	
	EDL	
	HTN	
	INRJ	
	PRX	
	SAR	
	♦SSI	
	WAB	
1N2063	ASI	309 -184
	CEN	
	COO	
	CRI	
	HTN	
	INRJ	
	PRX	
	SAR	
	♦SSI	
	UPI	
	WAB	
1N2064	Δ♦INR	309 -200
cont.next col.		

TYPE No.	MFRS	Pg&Line
1N2064		
(cont.)	ASI	
	CEN	
	COO	
	CRI	
	HTN	
	♦IDC	
	INRJ	
	PRX	
	SAR	
	♦SSI	
	UPI	
	WAB	
1N2065	ASI	309 -207
	CEN	
	COO	
	CRI	
	HTN	
	INRJ	
	PRX	
	SAR	
	♦SSI	
	UPI	
	WAB	
1N2066	Δ♦INR	310 - 8
	ASI	
	CEN	
	♦COO	
	CRI	
	HTN	
	♦IDC	
	INRJ	
	PRX	
	SAR	
	♦SSI	
	UPI	
	WAB	
1N2067	Δ♦INR	310 - 14
	ASI	
	CEN	
	COO	
	CRI	
	HTN	
	INRJ	
	PRX	
	SAR	
	♦SSI	
	UPI	
	WAB	
1N2068	Δ♦INR	404 -152
	ASI	
	CEN	
	♦COO	
	CRI	
	HTN	
	♦IDC	
	INRJ	
	NJS	
	PRX	
	SAR	
	SPE	
	♦SSI	
	UPI	
	WAB	
1N2069	ASI	278 - 38
	CEI	
	CEN	
	CODI	
	CRI	
	EDL	
	ELT	
	ETC	
	♦GIC	
	HTN	
	INR	
	INRJ	
	NJS	
	SAR	
	SCN	
	SLD	
	SOD	
	SPE	
	SST	
	SSY	
	STI	
	UPI	
	WAB	
1N2069A	ASI	278 - 39
	CEI	
	CEN	
	CODI	
	EDL	
	ETC	
	♦GIC	
	HTN	
	INR	
	INRJ	
	MAL	
	NJS	
	SAR	
	SCE	
	SCN	
	SLD	
	SOD	
	SPE	
	SST	
	STI	
	UPI	
	WAB	
1N2070	ASI	278 -119
	CEI	
	CEN	
	CODI	
	CRI	
	EDL	
	ELT	
	ETC	
	♦GIC	
	HTN	
	INR	
	INRJ	
	NJS	
	SAR	
	SCN	
	SLD	
	SOD	
	SPE	
	SST	
	SSY	
	STI	
	UPI	
	WAB	
1N2070A	ASI	278 -120
	CEI	
	CEN	
	CODI	
	EDL	
	ETC	
	♦GIC	
	HTN	
	INR	
	INRJ	
	MAL	
	NJS	
	SAR	
	SCE	
	SCN	
	SLD	
	SOD	
	SPE	
	SST	
	STI	
	UPI	
	WAB	
1N2071	CEI	278 -192
	CEN	
	CODI	
	EDL	
	ELT	
	ETC	
	♦GIC	
	HTN	
	IDC	
	INR	
	INRJ	
	NJS	
	SAR	
	SCN	
	SLD	
	SOD	
	SPE	
	SST	
	STI	
	WAB	
1N2071A	ASI	278 -193
	CEI	
	CEN	
	CODI	
	CRI	
	EDL	
	ETC	
	♦GIC	
	HTN	
	INR	
	INRJ	
	MAL	
	NJS	
	SAR	
	SCE	
	SCN	
	SLD	
	SOD	
	SPE	
	STI	
	UPI	
	WAB	
1N2072	CEN	277 -196
	CRI	
	ETC	
	IDC	
	SCN	
	SPE	
	SSI	
1N2073	CEN	278 - 2
	CRI	
	ETC	
	SCN	
	SSI	

1. TYPE No. CROSS INDEX

IN TYPE NUMBER SEQUENCE

TYPE No.	MFRS	Pg&Line
1N2074	CEN	278 - 35
	CRI	
	ETC	
	SCN	
	SSI	
1N2075	CEN	278 - 40
	CRI	
	ETC	
	SCN	
	SSI	
	UPI	
1N2076	CEN	278 - 85
	CRI	
	ETC	
	SCN	
	SSI	
	UPI	
1N2077	CEN	278 - 88
	CRI	
	ETC	
	SCN	
	SSI	
	UPI	
1N2078	CEN	278 -121
	CRI	
	ETC	
	SCN	
	SSI	
	UPI	
1N2079	CEN	278 -163
	CRI	
	ETC	
	SCN	
	SSI	
1N2080	CEN	276 -135
	CRI	
	ETC	
	IDC	
	SCN	
	SPE	
	SSI	
1N2081	CEN	276 -147
	CRI	
	ETC	
	IDC	
	SCN	
	SSI	
1N2082	CEN	276 -173
	CRI	
	ETC	
	SCN	
	SSI	
	UPI	
1N2083	CEN	276 -198
	CRI	
	ETC	
	SCN	
	SSI	
	UPI	
1N2084	ASI	276 -211
	CEN	
	CRI	
	ETC	
	SCN	
	SPE	
	SSI	
	WAB	
1N2085	CEN	277 - 21
	ETC	
	IDC	
	SCN	
	SSI	
1N2086	CEN	277 - 33
	CRI	
	ETC	
	IDC	
	SCN	
	SSI	
1N2090	IDC	277 -209
	SCN	
	SSY	
1N2091	SCN	278 - 21
	SPE	
1N2092	SCN	278 - 61
1N2093	SCN	278 -106
1N2094	SCN	278 -142
	SPE	
1N2095	IDC	278 -179
	SCN	
1N2096	SCN	278 -214
	SPE	
1N2103	CEN	277 -197
	CRI	
	ETC	
	IDC	
	SAR	
	SCN	
1N2104	CEN	278 - 3
	CRI	
	ETC	
	SAR	
	SCN	
1N2105	CEN	278 - 41
	CRI	
	ETC	
	SAR	
	SCN	
	UPI	
1N2106	CEN	278 - 89
	CRI	
	ETC	
	SAR	
	SCN	
	UPI	
1N2107	CEN	278 -122
	CRI	
	ETC	
	SAR	
	SCN	
	UPI	
1N2108	CEN	278 -164
	CRI	
	ETC	
	SAR	
	SCN	
1N2109	CRI	285 -199
	IDC	
1N2115	ETC	276 - 14
	IDC	
	SCN	
1N2116	CEN	278 -143
	CRI	
	SCN	
	SSI	
1N2117	CEN	279 - 27
	CRI	
	ETC	
	SCN	
	SSI	
	UPI	
1N2128	ASI	303 - 74
	CEN	
	COO	
	CRI	
	EDL	
	ETC	
	HSE	
	HTN	
	IDC	
	IDI	
	INRJ	
	PRX	
	SCN	
	SPE	
	SSI	
	SST	
	UPI	
	WAB	
1N2128A	ΔINR	303 - 77
	ASI	
	CEN	
	COO	
	EDL	
	ETC	
	HSE	
	HTN	
	IDC	
	INRJ	
	SCN	
	SPE	
	SSI	
	SST	
	WAB	

TYPE No.	MFRS	Pg&Line
1N2129	ASI	303 - 92
	CEN	
	COO	
	CRI	
	EDL	
	ETC	
	HSE	
	HTN	
	IDI	
	INRJ	
	PRX	
	SCN	
	SSI	
	SST	
	UPI	
	WAB	
1N2129A	ΔINR	303 - 97
	ASI	
	CEN	
	♦COO	
	EDL	
	ETC	
	HSE	
	HTN	
	INRJ	
	SCN	
	SPE	
	SSI	
	SST	
	WAB	
1N2130	ASI	303 -100
	CEN	
	COO	
	CRI	
	EDL	
	ETC	
	HSE	
	HTN	
	IDC	
	IDI	
	INRJ	
	PRX	
	SCN	
	SPE	
	SSI	
	UPI	
	WAB	
1N2130A	ΔINR	303 -101
	ASI	
	CEN	
	COO	
	EDL	
	ETC	
	HSE	
	HTN	
	IDC	
	INRJ	
	SCN	
	SPE	
	SSI	
	UPI	
	WAB	
1N2131	ASI	303 -111
	CEN	
	COO	
	CRI	
	EDL	
	ETC	
	HSE	
	HTN	
	IDI	
	INRJ	
	PRX	
	SCN	
	SPE	
	SSI	
	SST	
	UPI	
	WAB	
1N2131A	ΔINR	303 -116
	ASI	
	CEN	
	♦COO	
	EDL	
	ETC	
	HSE	
	HTN	
	INRJ	
	SCN	
	SSI	
	SST	
	WAB	
1N2132	ASI	303 -119
	CEN	
	COO	
	CRI	
	EDL	
	ETC	
	HSE	
	HTN	
	INRJ	
	PRX	
	SCN	
	SSI	
	SST	
	UPI	
	WAB	
1N2132A	ASI	303 -120
	CEN	
	COO	
	EDL	
	ETC	
	HSE	
	HTN	
	INRJ	
	SCN	
	SSI	
1N2133	ASI	303 -129
	CEN	
	COO	
	CRI	
	EDL	
	ETC	
	HSE	
	HTN	
	IDI	
	INRJ	
	PRX	
	SCN	
	SSI	
	SST	
	UPI	
	WAB	
1N2133A	ΔINR	303 -136
	ASI	
	CEN	
	COO	
	EDL	
	ETC	
	HSE	
	HTN	
	INRJ	
	SCN	
	SPE	
	SSI	
	SST	
1N2134	ASI	303 -139
	CEN	
	COO	
	CRI	
	EDL	
	ETC	
	HSE	
	HTN	
	INRJ	
	SCN	
	SPE	
	SSI	
	WAB	
1N2134A	ASI	303 -140
	CEN	
	COO	
	EDL	
	ETC	
	HSE	
	HTN	
	INRJ	
	SCN	
	SSI	
1N2135	ASI	303 -157
	CEN	
	COO	
	CRI	
	EDL	
	ETC	
	HSE	
	HTN	
	IDI	
	INRJ	
	SCN	
	SSI	
	SST	
	UPI	
	WAB	
1N2135A	ΔINR	303 -162
	ASI	
	CEN	
	♦COO	
	EDL	
	ETC	
	HSE	
	HTN	
	INRJ	
	♦PRX	
	SCN	
	SPE	
	SSI	
	SST	
	WAB	
1N2136	ASI	303 -164
	CEN	
	COO	
	CRI	
	EDL	
	ETC	
	HSE	
	HTN	
	INRJ	
	SCN	
	SPE	
	SSI	
	WAB	

TYPE No.	MFRS	Pg&Line
1N2136A	ASI	303 -165
	CEN	
	COO	
	EDL	
	ETC	
	HSE	
	HTN	
	INRJ	
	SCN	
	SSI	
1N2137	ASI	303 -171
	CEN	
	COO	
	CRI	
	EDL	
	ETC	
	HSE	
	HTN	
	IDI	
	INRJ	
	PRX	
	SCN	
	SPE	
	SSI	
	SST	
	UPI	
	WAB	
1N2137A	ΔINR	303 -175
	ASI	
	CEI	
	CEN	
	COO	
	EDL	
	ETC	
	HSE	
	HTN	
	INRJ	
	SCN	
	SSI	
	SST	
	UPI	
	WAB	
1N2138	ASI	303 -186
	CEN	
	COO	
	CRI	
	EDL	
	HSE	
	HTN	
	IDI	
	INRJ	
	PRX	
	SCN	
	SPE	
	SSI	
	SST	
	UPI	
	WAB	
1N2138A	ΔINR	303 -193
	ASI	
	CEI	
	CEN	
	♦COO	
	EDL	
	HSE	
	HTN	
	INRJ	
	SCN	
	SPE	
	SSI	
	SST	
1N2139	CODI	430 -126
	CRI	
	SCN	
	SSI	
1N2147	CEN	291 -128
	EDL	
	SCN	
	SSI	
	UTX	
1N2147A	CEN	291 -129
	EDL	
	SCN	
	♦SSI	
	UTX	
1N2148	CEN	291 -173
	CRI	
	SCN	
	♦SSI	
	UPI	
	UTX	
1N2148A	CEN	291 -174
	SCN	
	♦SSI	
	UTX	
1N2149	CEN	292 - 3
	CRI	
	SCN	
	♦SSI	
	UTX	
1N2149A	CEN	292 - 4
	SCN	
	♦SSI	
	UTX	
1N2150	CEN	292 - 32
	CRI	
	SCN	
	♦SSI	
	UTX	
1N2150A	CEN	292 - 33
	SCN	
	♦SSI	
	UTX	
1N2151	CEN	292 - 71
	CRI	
	SCN	
	♦SSI	
	UTX	
1N2151A	CEN	292 - 72
	SCN	
	♦SSI	
	UTX	
1N2152	CEN	292 - 91
	CRI	
	♦DIT	
	SCN	
	♦SSI	
	UTX	
1N2152A	CEN	292 - 92
	SCN	
	♦SSI	
	UTX	
1N2153	CEN	292 -132
	♦DIT	
	SCN	
	♦SSI	
	UTX	
1N2153A	CEN	292 -133
	SCN	
	♦SSI	
	UTX	
1N2154	ASI	298 -116
	CEI	
	CEN	
	COO	
	CRI	
	DII	
	♦DIT	
	EDL	
	ETC	
	GTC	
	HTN	
	IDC	
	IDI	
	PRX	
	SAR	
	SCN	
	SOD	
	♦SSEI	
	SSI	
	TRWS	
	UPI	
	WAB	
1N2155	ASI	298 -150
	CEI	
	CEN	
	COO	
	CRI	
	DII	
	♦DIT	
	EDL	
	ETC	
	GTC	
	HTN	
	IDI	
	♦NAT	
	PRX	
	SAR	
	SCN	
	SOD	
	SPE	
	♦SSEI	
	SSI	
	TIC	
	TRWS	
	UPI	
	WAB	
1N2156	ASI	298 -210
	CEI	
	CEN	
cont.next col.		

TYPE No.	MFRS	Pg&Line
1N2156		
(cont.)	COO	
	CRI	
	DII	
	♦DIT	
	EDL	
	ETC	
	GTC	
	HTN	
	IDC	
	IDI	
	♦NAT	
	PRX	
	SAR	
	SCN	
	SOD	
	SPE	
	♦SSEI	
	SSI	
	TRWS	
	UPI	
	WAB	
1N2157	ASI	299 - 20
	CEI	
	CEN	
	COO	
	CRI	
	DII	
	♦DIT	
	EDL	
	ETC	
	GTC	
	HTN	
	IDC	
	IDI	
	♦NAT	
	PRX	
	SAR	
	SCN	
	SOD	
	SPE	
	♦SSEI	
	SSI	
	TRWS	
	UPI	
	WAB	
1N2158	ASI	299 - 63
	CEI	
	CEN	
	COO	
	♦CRI	
	DII	
	♦DIT	
	EDL	
	ETC	
	GTC	
	HTN	
	IDC	
	IDI	
	♦NAT	
	PRX	
	SAR	
	SCN	
	SOD	
	SPE	
	♦SSEI	
	SSI	
	STR	
	TRWS	
	UPI	
	WAB	
1N2159	ASI	299 - 93
	CEI	
	CEN	
	COO	
	CRI	
	DII	
	EDL	
	ETC	
	GTC	
	HTN	
	IDC	
	IDI	
	♦NAT	
	PRX	
	SAR	
	SCN	
	SOD	
	SPE	
	♦SSEI	
	SSI	
	STR	
	TRWS	
	UPI	
	WAB	
1N2160	ASI	299 -127
	CEI	
	CEN	
	COO	
	CRI	
	DII	
	EDL	
	GTC	
	HTN	
	IDC	
	IDI	
	♦NAT	
	PRX	
	SAR	
	SCN	
	SOD	
	SPE	
	♦SSEI	
	SSI	
	WAB	
1N2163	CRI	186 - 79
	DII	
	♦GSE	
	♦MOTA	
	♦MSC	
	SCE	
	SPE	
	SSI	
	UTX	
1N2163A	DII	186 - 70
	GSE	
	♦MOTA	
	MSC	
	SCE	
	♦SSI	
	UTX	
1N2164	CRI	186 - 80
	DII	
	♦GSE	
	♦MOTA	
	♦MSC	
	SCE	
	SSI	
	UTX	
1N2164A	DII	186 - 71
	GSE	
	♦MOTA	
	♦MSC	
	SCE	
	SPE	
	SSI	
	UTX	
	WAB	
1N2165	CRI	186 - 81
	DII	
	♦GSE	
	MOTA	
	♦MSC	
	SCE	
	SSI	
	UTX	
1N2165A	DII	186 - 72
	GSE	
	♦MOTA	
	♦MSC	
	SCE	
	SSI	
	UTX	
1N2166	CRI	186 - 82
	DII	
	♦GSE	
	♦MOTA	
	♦MSC	
	SCE	
	SSI	
	UTX	
1N2166A	DII	186 - 73
	GSE	
	♦MOTA	
	♦MSC	
	SCE	
	SSI	
	UTX	
1N2167	CRI	186 - 83
	DII	
	♦GSE	
	♦MOTA	
	♦MSC	
	SCE	
	SPE	
	SSI	
	UTX	
1N2167A	DII	186 - 74
	GSE	
	♦MOTA	
	♦MSC	
	SCE	
	SPE	
	SSI	
	UTX	
1N2168	CRI	186 - 84
	DII	
	♦GSE	
	♦MOTA	
	♦MSC	
	SCE	
	SSI	
	UTX	
1N2168A	DII	186 - 75
	GSE	
	♦MOTA	
cont.next col.		

TYPE No.	MFRS	Pg&Line
1N2168A		
(cont.)	♦MSC	
	SCE	
	SSI	
	UTX	
1N2169	CRI	186 - 85
	DII	
	♦GSE	
	♦MOTA	
	♦MSC	
	SCE	
	SSI	
	UTX	
1N2169A	DII	186 - 76
	GSE	
	♦MOTA	
	♦MSC	
	SCE	
	SPE	
	SSI	
	UTX	
1N2170	CRI	186 - 86
	DII	
	♦GSE	
	♦MOTA	
	♦MSC	
	SCE	
	SSI	
	UTX	
1N2170A	DII	186 - 77
	GSE	
	♦MOTA	
	♦MSC	
	SCE	
	SSI	
	UTX	
1N2171	CRI	186 - 87
	DII	
	♦GSE	
	♦MOTA	
	♦MSC	
	SCE	
	SSI	
	UTX	
1N2171A	DII	186 - 78
	GSE	
	♦MOTA	
	♦MSC	
	SCE	
	SSI	
	UTX	
1N2172	CEN	302 -126
	CRI	
	EDL	
	IDC	
	NJS	
	SSI	
1N2173	CEN	302 -141
	EDL	
	NJS	
	SSI	
1N2174	CEN	302 -171
	EDL	
	IDC	
	SSI	
1N2214	CRI	172 - 81
	IDC	
	INRJ	
	SSI	
1N2216	ASI	283 - 71
	CEN	
	CRI	
	EDL	
	ETC	
	HSE	
	IDC	
	SCN	
	SOD	
	SSI	
	UPI	
1N2217	AMX	283 - 72
	ASI	
	CEN	
	CRI	
	IDC	
	SCN	
	SSI	
	UTX	
1N2218	ASI	284 -135
	CEN	
	CRI	
	EDL	
	ETC	
	HSE	
	IDC	
	SCN	
	SOD	
	SPE	
	SSI	
	UTX	
1N2219	AMX	284 -136
	ASI	
	CEN	
	CRI	
	SCN	
	SSI	
	UPI	
	UTX	
1N2220	ASI	284 -171
	CEN	
	CRI	
	EDL	
	ETC	
	HSE	
	IDC	
	SCN	
	SOD	
	SSI	
	UTX	
1N2221	AMX	284 -172
	ASI	
	CEN	
	CRI	
	SCN	
	SSI	
	UTX	
1N2222	ASI	282 - 31
	CEN	
	CRI	
	EDL	
	ETC	
	HSE	
	IDC	
	SCN	
	SOD	
	SSI	
	UTX	
1N2222A	ASI	282 - 32
	CEN	
	CRI	
	EDL	
	ETC	
	IDC	
	SCN	
	SSI	
	UTX	
1N2223	ASI	282 - 33
	CEN	
	CRI	
	IDC	
	SCN	
	SSI	
	UTX	
1N2223A	ASI	282 - 34
	CEN	
	IDC	
	SCN	
	SPE	
	SSI	
	UTX	
1N2224	ASI	401 -153
	CEN	
	CRI	
	EDL	
	ETC	
	HSE	
	IDC	
	SCN	
	SOD	
	SSI	
	UTX	
1N2224A	ASI	401 -154
	CEN	
	EDL	
	ETC	
	SCN	
	SSI	
	UTX	
1N2225	AMX	401 -155
	ASI	
	CEN	
	CRI	
	SCN	
	SSI	
	UTX	
1N2225A	AMX	401 -156
	ASI	
	CEN	
cont.next page		

Δ-Registered with JEDEC by this manufacturer

♦-Mfr's data sheet available in microfilm service

1. TYPE No. CROSS INDEX

IN TYPE NUMBER SEQUENCE

TYPE No.	MFRS	Pg&Line
1N2225A		
(cont.)	SCN	
	SSI	
	UTX	
1N2226	ASI	406 - 37
	CEN	
	CRI	
	EDL	
	IDC	
	SCN	
	SOD	
	SSI	
	UTX	
1N2226A	ASI	406 - 38
	CEN	
	EDL	
	IDC	
	SCN	
	SSI	
	UTX	
1N2227	AMX	406 - 39
	ASI	
	CEN	
	CRI	
	SCN	
	SSI	
	UTX	
1N2227A	AMX	406 - 40
	ASI	
	CEN	
	SCN	
	SSI	
	UTX	
1N2228	ASI	290 -111
	CEN	
	COO	
	CRI	
	EDL	
	ETC	
	IDC	
	SCN	
	SOD	
	SSI	
	UPI	
	UTX	
	WAB	
1N2228A	ASI	290 -112
	CEN	
	EDL	
	ETC	
	IDC	
	SCN	
	SOD	
	SSI	
	UTX	
1N2229	AMX	290 -113
	ASI	
	CEN	
	CRI	
	IDC	
	SCN	
	SSI	
	UTX	
1N2229A	AMX	290 -114
	ASI	
	CEN	
	IDC	
	SCN	
	SSI	
	UTX	
1N2230	ASI	290 -169
	CEN	
	COO	
	CRI	
	EDL	
	ETC	
	IDC	
	SCN	
	SOD	
	SSI	
	UPI	
	UTX	
	WAB	
1N2230A	ASI	290 -170
	CEN	
	ETC	
	IDC	
	SCN	
	SOD	
	SSI	
	UPI	
	UTX	
1N2231	AMX	290 -171
	ASI	
	CEN	
	CRI	
	SCN	
	SSI	
	UTX	
1N2231A	AMX	290 -172
	ASI	
	CEN	
	SCN	
	SSI	
	UTX	
1N2232	ASI	290 -199
	CEN	
	COO	
	CRI	
	EDL	
	ETC	
	IDC	
	SCN	
	SOD	
	SSI	
	UPI	
	UTX	
	WAB	
1N2232A	ASI	290 -200
	CEN	
	EDL	
	ETC	
	IDC	
	SCN	
	SOD	
	SSI	
	UPI	
	UTX	
1N2233	AMX	290 -201
	ASI	
	CEN	
	CRI	
	SCN	
	SSI	
	UTX	
1N2233A	AMX	290 -202
	ASI	
	CEN	
	SCN	
	SSI	
	UTX	
1N2234	ASI	291 - 1
	CEN	
	COO	
	CRI	
	EDL	
	ETC	
	IDC	
	SCN	
	SOD	
	SSI	
	UPI	
	UTX	
	WAB	
1N2234A	ASI	291 - 2
	CEN	
	EDL	
	ETC	
	IDC	
	SCN	
	SOD	
	SSI	
	UPI	
	UTX	
1N2235	AMX	291 - 3
	ASI	
	CEN	
	CRI	
	SCN	
	SSI	
	UTX	
1N2235A	AMX	291 - 4
	ASI	
	CEN	
	SCN	
	SSI	
	UTX	
1N2236	ASI	291 - 28
	CEN	
	COO	
	CRI	
	EDL	
	ETC	
	IDC	
	SCN	
	SOD	
	SSI	
	UTX	
	WAB	
1N2236A	ASI	291 - 29
	CEN	
	EDL	
	ETC	
	IDC	
cont.next col.		

TYPE No.	MFRS	Pg&Line
1N2236A		
(cont.)	SCN	
	SOD	
	SSI	
	UTX	
1N2237	AMX	291 - 30
	ASI	
	CEN	
	CRI	
	SCN	
	SSI	
	UTX	
1N2237A	AMX	291 - 31
	ASI	
	CEN	
	SCN	
	SSI	
	UTX	
1N2238	ASI	291 - 43
	CEN	
	♦COO	
	CRI	
	EDL	
	ETC	
	IDC	
	SCN	
	SOD	
	SSI	
	UTX	
	WAB	
1N2238A	ASI	291 - 44
	CEN	
	EDL	
	ETC	
	IDC	
	SCN	
	SOD	
	SSI	
	UTX	
1N2239	AMX	291 - 45
	ASI	
	CEN	
	CRI	
	SCN	
	SSI	
	UTX	
	WAB	
1N2239A	AMX	291 - 46
	ASI	
	CEN	
	SCN	
	SSI	
	UTX	
1N2240	ASI	291 - 65
	CEN	
	♦COO	
	CRI	
	EDL	
	ETC	
	IDC	
	SCN	
	SOD	
	SSI	
	UTX	
	WAB	
1N2240A	ASI	291 - 66
	CEN	
	EDL	
	ETC	
	IDC	
	SCN	
	SOD	
	SSI	
	UTX	
1N2241	AMX	291 - 67
	ASI	
	CEN	
	CRI	
	SCN	
	SSI	
	UTX	
1N2241A	AMX	291 - 68
	ASI	
	CEN	
	SCN	
	SSI	
	UTX	
1N2242	ASI	402 -150
	CEN	
	CRI	
	EDL	
	ETC	
	IDC	
	SCN	
	SOD	
	SSI	
	UTX	
1N2242A	ASI	402 -151
	CEN	
	EDL	
	ETC	
	IDC	
	SCN	
	SOD	
	SSI	
	UTX	
1N2243	AMX	402 -152
	ASI	
	CEN	
	CRI	
	SCN	
	SSI	
	UTX	
1N2243A	AMX	402 -153
	ASI	
	CEN	
	SCN	
	SSI	
	UTX	
1N2244	ASI	406 -134
	CEN	
	CRI	
	EDL	
	IDC	
	SCN	
	SOD	
	SSI	
	UTX	
	WAB	
1N2244A	ASI	406 -135
	CEN	
	EDL	
	IDC	
	SCN	
	SOD	
	SSI	
	UTX	
1N2245	AMX	406 -136
	ASI	
	CEN	
	CRI	
	SCN	
	SSI	
	UTX	
1N2245A	AMX	406 -137
	ASI	
	CEN	
	SCN	
	SSI	
	UTX	
1N2246	ASI	293 -205
	CEN	
	COO	
	CRI	
	EDL	
	ETC	
	IDC	
	MAL	
	SSI	
	SST	
	UPI	
	UTX	
	WAB	
1N2246A	ASI	293 -206
	CEN	
	EDL	
	ETC	
	IDC	
	MAL	
	SCN	
	SSI	
	SST	
	UPI	
	UTX	
1N2247	ASI	293 -207
	CEN	
	CRI	
	SSI	
	UTX	
1N2247A	ASI	293 -208
	CEN	
	SCN	
	SSI	
	UTX	
1N2248	ASI	294 - 6
	CEN	
	COO	
	CRI	
	EDL	
cont.next col.		

TYPE No.	MFRS	Pg&Line
1N2248		
(cont.)	ETC	
	IDC	
	MAL	
	SSI	
	SST	
	UPI	
	UTX	
	WAB	
1N2248A	ASI	294 - 7
	CEN	
	ETC	
	IDC	
	MAL	
	♦SCN	
	SSI	
	SST	
	UPI	
	UTX	
1N2249	AMX	294 - 8
	ASI	
	CEN	
	CRI	
	SSI	
	UTX	
	WAB	
1N2249A	AMX	294 - 9
	ASI	
	CEN	
	SCN	
	SSI	
	UTX	
1N2250	ASI	294 - 35
	CEN	
	COO	
	CRI	
	EDL	
	ETC	
	IDC	
	MAL	
	SSI	
	SST	
	UPI	
	UTX	
	WAB	
1N2250A	ASI	294 - 36
	CEN	
	EDL	
	ETC	
	IDC	
	MAL	
	SCN	
	SSI	
	SST	
	UPI	
	UTX	
1N2251	AMX	294 - 37
	ASI	
	CEN	
	SSI	
	UTX	
	WAB	
1N2251A	AMX	294 - 38
	ASI	
	CEN	
	SCN	
	SSI	
	UTX	
1N2252	ASI	294 - 63
	CEN	
	COO	
	CRI	
	EDL	
	ETC	
	IDC	
	MAL	
	SSI	
	SST	
	UPI	
	UTX	
	WAB	
1N2252A	ASI	294 - 64
	CEN	
	EDL	
	ETC	
	IDC	
	MAL	
	SCN	
	SSI	
	SST	
	UPI	
	UTX	
1N2253	AMX	294 - 65
	ASI	
	CEN	
	CRI	
	SSI	
	UTX	
1N2253A	AMX	294 - 66
	ASI	
	CEN	
	SCN	
	SSI	
	UTX	
1N2254	ASI	294 - 85
	CEN	
	♦COO	
	CRI	
	EDL	
	ETC	
	IDC	
	MAL	
	SSI	
	SST	
	UPI	
	UTX	
	WAB	
1N2254A	ASI	294 - 86
	CEN	
	EDL	
	ETC	
	IDC	
	MAL	
	SCN	
	SSI	
	SST	
	UPI	
	UTX	
1N2255	AMX	294 - 87
	ASI	
	CEN	
	CRI	
	SSI	
	UTX	
1N2255A	AMX	294 - 88
	ASI	
	CEN	
	SCN	
	SSI	
	UTX	
1N2256	ASI	294 -109
	CEN	
	COO	
	CRI	
	EDL	
	ETC	
	IDC	
	MAL	
	SSI	
	SST	
	UTX	
	WAB	
1N2256A	ASI	294 -110
	CEN	
	EDL	
	ETC	
	IDC	
	MAL	
	SCN	
	SSI	
	SST	
	UTX	
1N2257	AMX	294 -111
	ASI	
	CEN	
	CRI	
	SSI	
	UTX	
1N2257A	AMX	294 -112
	ASI	
	CEN	
	SCN	
	SSI	
	UTX	
1N2258	ASI	294 -122
	CEN	
	♦COO	
	CRI	
	EDL	
	ETC	
	IDC	
	MAL	
	SSI	
	SST	
	UTX	
	WAB	
1N2258A	ASI	294 -123
	CEN	
	EDL	
cont.next col.		

TYPE No.	MFRS	Pg&Line
1N2258A		
(cont.)	ETC	
	IDC	
	MAL	
	SCN	
	SSI	
	SST	
	UTX	
1N2259	AMX	294 -124
	ASI	
	CEN	
	CRI	
	SSI	
	UTX	
1N2259A	AMX	294 -125
	ASI	
	CEN	
	SCN	
	SSI	
	UTX	
1N2260	ASI	294 -139
	CEN	
	♦COO	
	CRI	
	EDL	
	ETC	
	IDC	
	MAL	
	SSI	
	SST	
	UTX	
	WAB	
1N2260A	ASI	294 -140
	CEN	
	EDL	
	ETC	
	IDC	
	MAL	
	SCN	
	SSI	
	SST	
	UTX	
1N2261	AMX	294 -141
	ASI	
	CEN	
	CRI	
	SSI	
	UTX	
1N2261A	AMX	294 -142
	ASI	
	CEN	
	SCN	
	SSI	
	UTX	
1N2262	ASI	403 - 43
	CEN	
	♦COO	
	CRI	
	EDL	
	ETC	
	IDC	
	MAL	
	SSI	
	SST	
	UTX	
	WAB	
1N2262A	ASI	403 - 44
	CEN	
	EDL	
	ETC	
	IDC	
	MAL	
	SCN	
	SSI	
	SST	
	UTX	
1N2263	AMX	403 - 45
	ASI	
	CEN	
	CRI	
	SSI	
	UTX	
1N2263A	AMX	403 - 46
	ASI	
	CEN	
	SCN	
	SSI	
	UTX	
1N2264	ASI	406 -159
	CEN	
	EDL	
	IDC	
	MAL	
	SSI	
	SST	
	UTX	
1N2264A	ASI	406 -160
	CEN	
	EDL	
	IDC	
	MAL	
	SCN	
	SSI	
	SST	
	UTX	
1N2265	AMX	406 -161
	ASI	
	CEN	
	CRI	
	MAL	
	SSI	
	UTX	
1N2265A	AMX	406 -162
	ASI	
	CEN	
	MAL	
	SCN	
	SSI	
	UTX	
1N2266	CEN	279 -206
	CRI	
	EDL	
	ETC	
	IDC	
	SCN	
	SOD	
	SSI	
	UPI	
	UTX	
1N2267	AMX	279 -207
	CEN	
	IDC	
	SCN	
	SSI	
	UTX	
1N2268	CEN	281 -131
	CRI	
	EDL	
	ETC	
	IDC	
	SCN	
	SOD	
	SSI	
	UTX	
1N2269	AMX	281 -132
	CEN	
	CRI	
	IDC	
	SCN	
	SSI	
	UTX	
1N2270	CEN	281 -159
	CRI	
	EDL	
	ETC	
	IDC	
	SCN	
	SOD	
	SPE	
	SSI	
	UTX	
1N2271	AMX	281 -160
	CEN	
	CRI	
	SCN	
	SSI	
	UTX	
1N2272	CEN	291 -130
	CRI	
	EDL	
	ETC	
	IDC	
	SSI	
	SST	
	UPI	
	UTX	
1N2273	AMX	291 -175
	CEN	
	CRI	
	EDL	
	ETC	
	IDC	
	SSI	
	UPI	
	UTX	
1N2274	CEN	292 - 5
cont.next col.		

TYPE No.	MFRS	Pg&Line
1N2274		
(cont.)	CRI	
	EDL	
	ETC	
	IDC	
	SSI	
	SST	
	UTX	
1N2275	CEN	292 - 34
	CRI	
	EDL	
	ETC	
	IDC	
	SSI	
	SST	
	UPI	
	UTX	
1N2276	CEN	292 - 73
	CRI	
	EDL	
	ETC	
	IDC	
	SSI	
	SST	
	UTX	
1N2277	CEN	292 - 93
	CRI	
	EDL	
	ETC	
	IDC	
	SSI	
	SST	
	UTX	
1N2278	CEN	292 -134
	CRI	
	EDL	
	ETC	
	IDC	
	SSI	
	SST	
	UTX	
1N2279	CEN	292 -181
	CRI	
	EDL	
	ETC	
	IDC	
	SSI	
	SST	
	UTX	
1N2280	CEN	403 - 27
	CRI	
	EDL	
	ETC	
	IDC	
	SSI	
	SST	
	UTX	
1N2281	CEN	406 -156
	CRI	
	EDL	
	IDC	
	SSI	
	SST	
	UTX	
1N2282	ASI	297 -158
	CEN	
	COO	
	CRI	
	EDL	
	IDC	
	SCN	
	SOD	
	SSI	
	SST	
	UPI	
	UTX	
	WAB	
1N2283	ASI	297 -181
	CEN	
	COO	
	EDL	
	ETC	
	IDC	
	SCN	
	SOD	
	SSI	
	SST	
	STR	
	UPI	
	UTX	
	WAB	
1N2284	ASI	297 -191
	CEN	
	COO	
	EDL	
	IDC	
	SCN	
	SOD	
	SSI	
	SST	
	STR	
	UTX	
	WAB	
1N2285	ASI	297 -208
	CEN	
	♦COO	
	CRI	
	EDL	
	IDC	
	SCN	
	SOD	
	SSI	
	SST	
	STR	
	UTX	
	WAB	
1N2286	ASI	298 - 6
	CEN	
	♦COO	
	CRI	
	EDL	
	IDC	
	SCN	
	SOD	
	SSI	
	STR	
	UTX	
	WAB	
1N2287	ASI	403 -118
	CEN	
	♦COO	
	CRI	
	EDL	
	IDC	
	SCN	
	SOD	
	SSI	
	SST	
	STR	
	UTX	
	WAB	
1N2288	ASI	406 -203
	CEN	
	♦COO	
	CRI	
	EDL	
	IDC	
	SCN	
	SOD	
	SSI	
	STR	
	UTX	
	WAB	
1N2289	AMX	283 -117
	CEN	
	CRI	
	SCN	
	SSI	
	UTX	
1N2289A	AMX	283 -118
	CEN	
	EDL	
	ETC	
	IDC	
	SCN	
	SSI	
	UPI	
	UTX	
1N2290	AMX	290 -138
	CEN	
	CRI	
	SCN	
	SPE	
	SSI	
	UTX	
	WAB	
1N2290A	AMX	283 -119
	CEN	
	EDL	
	ETC	
	IDC	
	SCN	
	SPE	
	SSI	
	UPI	
	UTX	
1N2291	AMX	283 -182
	CEN	
	CRI	
	SCN	
	SSI	
	UTX	

Δ-Registered with JEDEC by this manufacturer

♦-Mfr's data sheet available in microfilm service

1. TYPE No. CROSS INDEX

IN TYPE NUMBER SEQUENCE

TYPE No.	MFRS	Pg&Line
1N2291A	AMX	284 - 28
	CEN	
	EDL	
	ETC	
	IDC	
	SCN	
	SSI	
	UPI	
	UTX	
1N2292	AMX	284 - 29
	CEN	
	CRI	
	SCN	
	SSI	
	UTX	
1N2292A	AMX	284 - 30
	CEN	
	EDL	
	ETC	
	SCN	
	SSI	
	UPI	
	UTX	
1N2293	AMX	284 - 69
	CEN	
	CRI	
	SCN	
	SSI	
	UTX	
1N2293A	AMX	284 - 70
	CEN	
	EDL	
	ETC	
	IDC	
	SCN	
	SSI	
	UPI	
	UTX	
1N2326	NJS	231 -189
1N2327	CRI	405 - 62
	SSI	
1N2328	SSI	416 - 71
1N2348	CEN	287 -177
	SSI	
1N2349	CEN	288 - 15
	CRI	
	SSI	
1N2350	CEN	288 - 58
	CRI	
	SSI	
1N2357	ASI	409 - 61
	SCN	
	SSI	
	WAB	
1N2358	SCN	411 - 33
	SSI	
1N2359	ASI	412 - 17
	SCN	
	WAB	
1N2360	SCN	413 -199
	UPI	
1N2361	SCN	415 - 19
1N2362	CEN	409 - 68
	CRI	
	EDL	
	SCN	
	SOD	
	SSI	
1N2362A	CEN	409 - 96
	EDL	
	SCN	
	SOD	
	SSI	
1N2362B	CEN	409 -104
	EDL	
	SSI	
1N2363	CEN	409 - 69
	SCN	
	SSI	
1N2363A	CEN	409 - 97
	SCN	
	SSI	
1N2363B	CEN	409 -105
	SSI	
1N2364	CEN	411 - 67
	CRI	
	EDL	
	SCN	
	SOD	
	SSI	
1N2364A	CEN	411 -112
	EDL	
	SCN	
	SOD	
	SSI	
1N2364B	CEN	411 -121
	EDL	
	SCN	
	SSI	
1N2365	CEN	411 - 68
	CRI	
	SCN	
	SSI	
1N2365A	CEN	411 -113
	SCN	
	SSI	
1N2365B	CEN	411 -122
	SCN	
	SSI	
1N2366	CEN	412 - 40
	CRI	
	EDL	
	SCN	
	SOD	
	SSI	
1N2366A	CEN	412 - 86
	EDL	
	SCN	
	SOD	
	SSI	
1N2366B	CEN	412 -101
	EDL	
	SCN	
	SSI	
1N2367	CEN	412 - 41
	SCN	
	SSI	
1N2367A	CEN	412 - 87
	SCN	
	SSI	
1N2367B	CEN	412 -102
	SCN	
	SSI	
1N2368	CEI	413 -210
	CEN	
	EDL	
	SCN	
	SOD	
	SSI	
1N2368A	CEN	414 - 5
	EDL	
	SCN	
	SOD	
	SSI	
1N2368B	CEN	414 - 10
	EDL	
	SCN	
	SSI	
1N2369	CEN	413 -211
	CRI	
	SCN	
	SSI	
	UTX	
1N2369A	CEN	414 - 6
	SCN	
	SSI	
	UTX	
1N2369B	CEN	414 - 11
	SCN	
	SSI	
	UTX	
1N2370	CEN	415 - 45
	CRI	
	EDL	
	SCN	
	SOD	
	SSI	
	UTX	
1N2370A	CEN	415 - 93
	EDL	
	SCN	
	SOD	
	SSI	
	UTX	
1N2370B	CEN	415 -111
	EDL	
	SCN	
	SSI	
	UTX	
1N2371	CEN	415 - 46
	CRI	
	SCN	
	SSI	
	UTX	
1N2371A	CEN	415 - 94
	SCN	
	SSI	
	UTX	
1N2371B	CEN	415 -112
	SCN	
	SSI	
	UTX	
1N2372	CEN	401 - 56
	CRI	
	EDL	
	ETC	
	IDC	
	SCN	
	SOD	
	SSI	
1N2373	CEN	274 -175
	CRI	
	EDL	
	ETC	
	HTN	
	PDE	
	SAR	
	SCN	
	♦SOD	
	SSI	
1N2374	CEN	401 - 33
	♦CODI	
	CRI	
	EDL	
	ETC	
	HTN	
	PDE	
	SAR	
	SCN	
	SSI	
1N2375	CEN	411 - 2
	♦CODI	
	CRI	
	EDL	
	HTN	
	PDE	
	SAR	
	SCN	
	♦SOD	
	SSI	
1N2376	♦CODI	414 -206
	CRI	
	EDL	
	HTN	
	PDE	
	SAR	
	SCN	
	♦SOD	
	SPE	
	SSI	
1N2377	♦CODI	416 -206
	CRI	
	EDL	
	HTN	
	PDE	
	SAR	
	SCN	
	♦SOD	
	SPE	
	SSI	
1N2378	ASI	419 - 73
	♦CODI	
	CRI	
	EDL	
	HTN	
	PDE	
	SAR	
	SCN	
	♦SOD	
	SSI	
	UTX	
	WAB	
1N2379	ASI	421 -153
	♦CODI	
	CRI	
	EDL	
	HTN	
	PDE	
	SAR	
	SCN	
	♦SOD	
	SSI	
	UTX	
	WAB	
1N2380	♦CODI	424 -153
	CRI	
	EDL	
	HTN	
	PDE	
	SAR	
	SCN	
	SOD	
	SSI	
	UTX	
1N2381	♦CODI	427 - 41
	CRI	
	EDL	
	HTN	
	PDE	
	SAR	
	SCN	
	SOD	
	SSI	
	UTX	
1N2382	ΔTRWS	421 -164
	♦CODI	
	CRI	
	CSD	
	EDL	
	HTN	
	PDE	
	SAR	
	SCN	
	♦SOD	
	SSI	
	UTX	
1N2382A	ΔTRWS	421 -189
	EDL	
	SCN	
	SOD	
	SSI	
1N2383	ΔTRWS	424 -155
	♦CODI	
	CRI	
	CSD	
	EDL	
	HTN	
	PDE	
	SAR	
	SCN	
	SOD	
	SSI	
	UTX	
1N2383A	ΔTRWS	424 -188
	EDL	
	SCN	
	SOD	
	SSI	
1N2384	ΔTRWS	426 - 27
	♦CODI	
	CRI	
	CSD	
	EDL	
	HTN	
	PDE	
	SAR	
	SCN	
	SOD	
	SSI	
	UTX	
1N2384A	ΔTRWS	426 - 52
	EDL	
	SCN	
	SOD	
	SSI	
1N2385	ΔTRWS	427 - 54
	♦CODI	
	CRI	
	CSD	
	EDL	
	HTN	
	PDE	
	SAR	
	SCN	
	SOD	
	SPE	
	SSI	
	UTX	
1N2385A	ΔTRWS	427 - 70
	EDL	
	SCN	
	SOD	
	SSI	
1N2387	SSI	207 - 41
1N2389	ΔSAR	412 - 30
	AMX	
	CEI	
	CRI	
	EDI	
	EDL	
	HTN	
	INRJ	
	PDE	
	SCN	
	SOD	
	SPE	
	♦SSI	
1N2390	IDC	283 - 95
	SSI	
	UPI	
1N2391	CRI	283 -150
	SSI	
	UPI	
1N2392	SSI	283 -215
	UPI	
1N2393	CRI	284 - 49
	SSI	
	UPI	
1N2394	CRI	284 -102
	SSI	
	UPI	
1N2395	CRI	284 -153
	SSI	
1N2396	SSI	284 -203
1N2397	SSI	285 - 29
1N2398	SSI	285 - 61
1N2399	IDC	283 - 96
	SSI	
	UTX	
1N2400	SSI	283 -151
	UTX	
1N2401	SPE	283 -216
	SSI	
	UTX	
1N2402	SSI	284 - 50
	UTX	
1N2403	SSI	284 -103
	UTX	
1N2404	SSI	284 -154
	UTX	
1N2405	SSI	284 -204
	UTX	
1N2406	SSI	285 - 30
	UTX	
1N2407	SSI	285 - 62
	UTX	
1N2408	IDC	283 - 97
	SSI	
	UTX	
1N2409	SSI	283 -152
	UTX	
1N2410	SSI	283 -217
	UTX	
1N2411	SSI	284 - 51
	UTX	
1N2412	SSI	284 -104
	UTX	
1N2413	SSI	284 -155
	UTX	
1N2414	SSI	284 -205
	UTX	
1N2415	SSI	285 - 31
	UTX	
1N2416	SSI	285 - 63
	UTX	
1N2417	IDC	283 - 98
	SSI	
1N2418	SSI	283 -153
1N2419	SSI	283 -218
1N2420	SSI	284 - 52
1N2421	SSI	284 -105
1N2422	SPE	284 -156
	SSI	
1N2423	SSI	284 -206
1N2424	SSI	285 - 32
1N2425	SSI	285 - 64
1N2426	CEN	305 -185
	COO	
	EDL	
	IDC	
	NJS	
	SAR	
	SSI	
	TIC	
	WAB	
1N2427	CEN	305 -192
	♦COO	
	EDL	
	IDC	
	NJS	
	SAR	
	SSI	
	WAB	
1N2428	CEN	305 -202
	COO	
	EDL	
	IDC	
	SAR	
	SSI	
	WAB	
1N2429	CEN	305 -207
	♦COO	
	EDL	
	IDC	
	SAR	
	SSI	
	WAB	
1N2430	CEN	306 - 11
	COO	
	EDL	
	♦IDC	
	SAR	
	SSI	
	WAB	
1N2431	CEN	306 - 14
	♦COO	
	EDL	
	IDC	
	SAR	
	SSI	
	WAB	
1N2432	CEN	306 - 28
	COO	
	EDL	
	SAR	
	SSI	
	WAB	
1N2433	CEN	306 - 34
	♦COO	
	EDL	
	SAR	
	SSI	
	STR	
	WAB	
1N2434	CEN	306 - 75
	♦COO	
	EDL	
	SAR	
	SSI	
	STR	
	WAB	
1N2435	CEN	306 - 91
	♦COO	
	CRI	
cont.next col.		
1N2435 (cont.)	EDL	
	♦IDC	
	SAR	
	SSI	
	STR	
	WAB	
1N2436	CEN	307 - 39
	COO	
	CRI	
	EDL	
	IDC	
	NJS	
	SAR	
	SSI	
	STR	
	UPI	
	WAB	
1N2437	CEN	307 - 56
	♦COO	
	CRI	
	EDL	
	NJS	
	SAR	
	SSI	
	STR	
	WAB	
1N2438	CEN	307 - 77
	COO	
	CRI	
	EDL	
	IDC	
	SAR	
	SSI	
	STR	
	WAB	
1N2439	CEN	307 - 85
	♦COO	
	CRI	
	EDL	
	SAR	
	SSI	
	STR	
	WAB	
1N2440	CEN	307 -114
	COO	
	CRI	
	EDL	
	♦IDC	
	SAR	
	SSI	
	STR	
	WAB	
1N2441	CEN	307 -122
	♦COO	
	CRI	
	EDL	
	IDC	
	SAR	
	SSI	
	STR	
	WAB	
1N2442	CEN	307 -142
	COO	
	CRI	
	EDL	
	SAR	
	SSI	
	STR	
	WAB	
1N2443	CEN	307 -150
	♦COO	
	CRI	
	EDL	
	♦IDC	
	SAR	
	SSI	
	STR	
	WAB	
1N2444	CEN	307 -183
	♦COO	
	CRI	
	EDL	
	SAR	
	SSI	
	STR	
	WAB	
1N2445	CEN	307 -197
	♦COO	
	CRI	
	EDL	
	♦IDC	
	SAR	
	SSI	
	STR	
	WAB	
1N2446	ASI	302 - 52
	CEN	
	CRI	
	EDL	
	ETC	
	HSE	
	IDC	
	SCN	
	SSI	
	SST	
	TRWS	
1N2447	ASI	302 - 57
	CEN	
	CRI	
	ETC	
	HSE	
	IDC	
	SCN	
	SSI	
	SST	
	TRWS	
1N2448	ASI	302 - 60
	CEN	
	CRI	
	ETC	
	HSE	
	IDC	
	SCN	
	SSI	
	TRWS	
1N2449	ASI	302 - 64
	CEN	
	CRI	
	ETC	
	HSE	
	IDC	
	SCN	
	SSI	
	TRWS	
1N2450	ASI	302 - 67
	CEN	
	CRI	
	ETC	
	HSE	
	IDC	
	SCN	
	SSI	
	TRWS	
1N2451	ASI	302 - 70
	CEN	
	CRI	
	ETC	
	HSE	
	IDC	
	SCN	
	SSI	
	SST	
	TRWS	
1N2452	ASI	302 - 77
	CEN	
	CRI	
	ETC	
	HSE	
	IDC	
	SCN	
	SSI	
	TRWS	
1N2453	ASI	302 - 80
	CEN	
	CRI	
	ETC	
	HSE	
	IDC	
	SCN	
	SSI	
	SST	
	TRWS	
1N2454	ASI	302 - 85
	CEN	
	CRI	
	ETC	
	HSE	
	IDC	
	SCN	
	SSI	
	SST	
	TRWS	
1N2455	ASI	302 - 90
	CEN	
	CRI	
	HSE	
	IDC	
	SCN	
	SSI	
	SST	
	TRWS	
1N2456	ASI	302 - 96
	CEN	
	CRI	
cont.next col.		
1N2456 (cont.)	HSE	
	IDC	
	SCN	
	SSI	
	SST	
	TRWS	
1N2457	ASI	302 -101
	CEN	
	HSE	
	IDC	
	SCN	
	SSI	
	SST	
	TRWS	
1N2458	ASI	303 - 73
	CEN	
	COO	
	CRI	
	EDL	
	ETC	
	HSE	
	IDC	
	SAR	
	SCN	
	SSI	
	SST	
	TRWS	
	WAB	
1N2459	ASI	303 - 84
	CEN	
	♦COO	
	CRI	
	EDL	
	ETC	
	HSE	
	SAR	
	SCN	
	SSI	
	SST	
	TRWS	
	WAB	
1N2460	ASI	303 - 99
	CEN	
	COO	
	CRI	
	EDL	
	ETC	
	HSE	
	IDC	
	SAR	
	SCN	
	SSI	
	TRWS	
	WAB	
1N2461	ASI	303 -104
	CEN	
	♦COO	
	CRI	
	EDL	
	ETC	
	HSE	
	SAR	
	SCN	
	SSI	
	SST	
	TRWS	
	WAB	
1N2462	ASI	303 -118
	CEN	
	COO	
	CRI	
	EDL	
	ETC	
	HSE	
	SAR	
	SCN	
	SSI	
	TRWS	
	WAB	
1N2463	ASI	303 -121
	CEN	
	COO	
	EDL	
	ETC	
	HSE	
	IDC	
	SAR	
	SCN	
	SSI	
	SST	
	TRWS	
	WAB	
1N2464	ASI	303 -138
	CEN	
	COO	
	CRI	
	EDL	
	ETC	
	HSE	
	SAR	
	SCN	
	SSI	
	TRWS	
	WAB	
1N2465	ASI	303 -145
	CEN	
	COO	
	CRI	
	EDL	
	ETC	
	HSE	
	SAR	
	SCN	
	SSI	
	SST	
	TRWS	
	WAB	
1N2466	ASI	303 -167
	CEN	
	COO	
	CRI	
	EDL	
	ETC	
	HSE	
	SAR	
	SCN	
	SSI	
	SST	
	WAB	
1N2467	ASI	303 -183
	CEN	
	♦COO	
	CRI	
	EDL	
	SAR	
	SCN	
	SSI	
	SST	
	WAB	
1N2468	ASI	303 -195
	CEN	
	CRI	
	EDL	
	SCN	
	SSI	
	SST	
1N2469	ASI	303 -198
	CEN	
	EDL	
	SCN	
	SSI	
	SST	
1N2482	ΔSAR	278 - 72
	CEI	
	CEN	
	CODI	
	CRI	
	ETC	
	HTN	
	SCN	
	SPE	
	SSI	
	STI	
	UPI	
1N2483	ΔSAR	278 -152
	ASI	
	CEI	
	CEN	
	CODI	
	CRI	
	ETC	
	HTN	
	SCN	
	SPE	
	SSI	
	STI	
	UPI	
	WAB	
1N2484	ΔSAR	279 - 5
	ASI	
	CEI	
	CEN	
	CODI	
	CRI	
	ETC	
	HTN	
	SCN	
	SPE	
	SSI	
	STI	
	UPI	
	WAB	
1N2485	ΔSAR	278 - 73
	CEN	
	CRI	
cont.next page		

Δ-Registered with JEDEC by this manufacturer

♦-Mfr's data sheet available in microfilm service

1. TYPE No. CROSS INDEX

IN TYPE NUMBER SEQUENCE

TYPE No.	MFRS	Pg&Line
1N2485 (cont.)		
	HTN	SCN
	SPE	UPI
1N2486		ΔSAR 278 -113
	CEN	CRI
	ETC	HTN
	IDC	SCN
		UPI
1N2487		ΔSAR 278 -153
	ASI	CEN
	CRI	ETC
	HTN	SCN
	UPI	WAB
1N2488		ΔSAR 278 -186
	CEN	CRI
	ETC	HTN
		SCN
1N2489		ΔSAR 279 - 6
	CEN	CRI
	ETC	HTN
	SCN	SPE
1N2490		ΔSAR 412 - 24
	AMX	CRI
	EDI	EDL
	HTN	INRJ
	PDE	SCN
	SOD	SPE
		♦SSI
1N2491		ASI 291 -131
	CEN	COO
	CRI	DII
	EDL	ETC
	HTN	IDC
	SAR	SCN
	SSI	SST
	UPI	WAB
1N2492		ASI 291 -176
	CEN	COO
	CRI	DII
	EDL	ETC
	HTN	IDC
	SAR	SCN
	SSI	SST
	UPI	WAB
1N2493		ASI 292 - 6
	CEN	COO
	CRI	DII
	EDL	ETC
	HTN	IDC
	SAR	SCN
	SPE	SSI
	SST	UPI
		WAB
1N2494		ASI 292 - 35
	CEN	COO
	CRI	DII
	EDL	ETC
	HTN	IDC
	SAR	SCN
	SSI	SST
	UPI	WAB
1N2495		ASI 292 - 74
	CEN	COO
	CRI	DII
	EDL	ETC
	HTN	IDC
	SAR	SCN
	SSI	SST
	UPI	WAB
1N2496		ASI 292 - 94
	CEN	COO
	CRI	DII
	EDL	ETC
	HTN	IDC
	SAR	SCN
	SOD	SSI
	SST	WAB
1N2497		ASI 292 -135
	CEN	♦COO
	CRI	DII
	EDL	ETC
	HTN	IDC
	SAR	SCN
	SOD	SSI
	SST	WAB
1N2498		CEN 381 -125
	CRI	ESP
	ETC	♦GSE
	HTN	IDC
	MSC	SAR
	SCN	SIEG
	SSI	TRWS
1N2498A		CEN 381 -111
	ESP	ETC
	GSE	IDC
	MSC	SAR
	SCN	♦SSI
		TRWS
1N2498C		GSE 381 -126
	MSC	SPE
1N2499		CEN 382 - 13
	CRI	ESP
	ETC	♦GSE
	HTN	IDC
	MSC	SAR
	SCN	SIEG
	SSI	TRWS
1N2499A		CEN 382 - 2
	ESP	ETC
	GSE	IDC
	MSC	SAR
	SCN	SSI
		TRWS
1N2499C		GSE 382 - 14
		MSC
1N2500		CEN 382 -134
	CRI	ESP
	ETC	♦GSE
	HTN	IDC
	MSC	SAR
	SCN	SIEG
	SPE	SSI
		TRWS
1N2500A		CEN 382 -119
	ESP	ETC
	GSE	IDC
	MSC	SAR
	SCN	SSI
		TRWS
1N2500C		GSE 382 -135
		MSC
1N2501		CEN 275 - 15
	ETC	IDC
	SCN	SSI
1N2502		CEN 401 - 36
	ETC	IDC
	SCN	SSI
1N2503		IDC 405 -197
	SCN	SSI
1N2504		EDL 411 - 5
	SCN	SSI
1N2505		CEN 276 - 37
	ETC	IDC
	SCN	SSI
1N2506		CEN 401 - 71
	ETC	SCN
	SSI	UPI
1N2507		IDC 405 -210
	SCN	SSI
1N2508		SCN 411 - 26
	SPE	SSI
1N2512		ASI 290 - 28
	CEN	CRI
	EDL	ETC
	HTN	IDC
	SCN	SOD
	SSI	UPI
1N2513		ASI 290 - 40
	CEN	CRI
	EDL	ETC
	HTN	IDC
	SCN	SOD
	SSI	UPI
1N2514		ASI 290 - 47
	CEN	CRI
	EDL	ETC
	HTN	IDC
	SCN	SOD
1N2515		ASI 290 - 54
	CEN	EDL
	ETC	HTN
	IDC	SCN
	SOD	SSI
		UPI
1N2516		ASI 290 - 62
	CEN	CRI
	EDL	ETC
	HTN	IDC
	SCN	SOD
	SSI	UTX
1N2517		ASI 290 - 67
	CEN	CRI
	EDL	ETC
	HTN	IDC
	SCN	SOD
	SSI	UTX
1N2518		AMX 290 - 29
	CEN	CRI
	SCN	SSI
		UTX
1N2519		AMX 290 - 41
	CEN	SCN
	SSI	UTX
1N2520		AMX 290 - 48
	CEN	SCN
	SSI	UTX
1N2521		AMX 290 - 55
	CEN	ETC
	IDC	SCN
	SSI	UPI
		UTX
1N2522		AMX 290 - 63
	CEN	SCN
	SSI	UTX
1N2523		AMX 290 - 68
	CEN	ETC
	IDC	SCN
	SSI	UTX
1N2524		AMX 287 - 3
	CEN	CRI
	IDC	SCN
	SSI	UTX
1N2525		AMX 287 - 22
	CEN	CRI
	SCN	SSI
		UTX
1N2526		AMX 287 - 43
	CEN	CRI
	SCN	SSI
		UTX
1N2527		AMX 287 - 52
	CEN	CRI
	SCN	SSI
		UTX
1N2528		AMX 287 - 72
cont.next col.		
1N2528 (cont.)		CEN
	CRI	SCN
	SSI	UTX
1N2529		AMX 287 - 79
	CEN	CRI
	SCN	SSI
		UTX
1N2530		AMX 287 - 99
	CEN	CRI
	SCN	SSI
		UTX
1N2531		AMX 287 -106
	CEN	CRI
	SCN	SSI
		UTX
1N2532		AMX 287 -127
	CEN	CRI
	SCN	SSI
		UTX
1N2533		AMX 287 -131
	CEN	CRI
	SCN	SSI
		UTX
1N2534		AMX 402 -144
	CEN	CRI
	SCN	SSI
		UTX
1N2535		AMX 287 - 4
	CEN	CRI
	IDC	SCN
	♦SSI	UTX
1N2536		AMX 287 - 23
	CEN	CRI
	SCN	SSI
		UTX
1N2537		AMX 287 - 44
	CEN	CRI
	SCN	♦SSI
		UTX
1N2538		AMX 287 - 53
	CEN	CRI
	SCN	♦SSI
		UTX
1N2539		AMX 287 - 73
	CEN	CRI
	SCN	♦SSI
		UTX
1N2540		AMX 287 - 80
	CEN	CRI
	SCN	♦SSI
		UTX
1N2541		AMX 287 -100
	CEN	CRI
	SCN	♦SSI
		UTX
1N2542		AMX 287 -107
	CEN	SCN
	♦SSI	UTX
1N2543		AMX 287 -128
	CEN	SCN
	♦SSI	UTX
1N2544		CEN 287 -132
	CRI	SCN
	♦SSI	UTX
1N2545		AMX 402 -145
	CEN	SCN
	♦SSI	UTX
1N2546		AMX 287 - 5
	CEN	IDC
	SCN	SSI
		UTX
1N2547		AMX 287 - 24
	CEN	CRI
	SCN	SPE
	SSI	UTX
1N2548		AMX 287 - 45
	CEN	CRI
	SCN	SSI
		UTX
1N2549		AMX 287 - 54
	CEN	CRI
	SCN	SSI
		UTX
1N2550		AMX 287 - 74
	CEN	CRI
	SCN	SSI
		UTX
1N2551		AMX 287 - 81
	CEN	CRI
	SCN	SSI
		UTX
1N2552		AMX 287 -101
	CEN	CRI
	SCN	SSI
		UTX
1N2553		AMX 287 -108
	CEN	CRI
	SCN	SSI
		UTX
1N2554		AMX 287 -129
	CEN	CRI
	SCN	SSI
		UTX
1N2555		AMX 287 -133
	CEN	CRI
	SCN	SSI
		UTX
1N2556		AMX 402 -146
	CEN	CRI
	SCN	SSI
		UTX
1N2557		AMX 292 -143
cont.next col.		
1N2557 (cont.)		CEN
	SCN	SSI
		UTX
1N2558		AMX 292 -182
	CEN	CRI
	SCN	SSI
		UTX
1N2559		AMX 292 -191
	CEN	CRI
	SCN	SSI
		UTX
1N2560		AMX 403 - 28
	CEN	CRI
	SCN	SSI
		UTX
1N2561		AMX 292 -144
	CEN	CRI
	SCN	SSI
		UTX
1N2562		AMX 292 -183
	CEN	CRI
	SCN	SSI
		UTX
1N2563		AMX 292 -192
	CEN	CRI
	SCN	SSI
1N2564		AMX 403 - 29
	CEN	CRI
	SCN	SSI
1N2565		AMX 291 -132
	CEN	CRI
	SCN	SSI
1N2566		AMX 291 -177
	CEN	CRI
	SCN	SSI
		UTX
1N2567		AMX 292 - 7
	CEN	CRI
	SCN	SSI
		UTX
1N2568		AMX 292 - 36
	CEN	CRI
	SCN	SSI
		UTX
1N2569		AMX 292 - 75
	CEN	CRI
	SCN	SSI
		UTX
1N2570		AMX 292 - 95
	CEN	CRI
	SCN	SSI
		UTX
1N2571		AMX 292 -136
	CEN	CRI
	SCN	SSI
		UTX
1N2572		AMX 292 -145
	CEN	CRI
	SCN	SSI
		UTX
1N2573		AMX 292 -184
	CEN	CRI
	SCN	SSI
		UTX
1N2574		AMX 292 -193
	CEN	CRI
	SCN	SSI
		UTX
1N2575		AMX 403 - 30
	CEN	CRI
	SCN	SSI
		UTX
1N2576		AMX 294 -188
	CEN	CRI
	SCN	SPE
	♦SSI	UTX
1N2577		AMX 294 -218
	CEN	CRI
	SCN	♦SSI
		UTX
1N2578		AMX 295 - 33
	CEN	CRI
	SCN	♦SSI
		UTX
1N2579		AMX 295 - 57
	CEN	SCN
	♦SSI	UTX
1N2580		AMX 295 - 86
	CEN	CRI
	SCN	SPE
	♦SSI	UTX
1N2581		AMX 295 -106
	CEN	CRI
	SCN	♦SSI
		UTX
1N2582		AMX 295 -133
	CEN	CRI
	SCN	♦SSI
		UTX
1N2583		AMX 295 -144
	CEN	CRI
	SCN	♦SSI
		UTX
1N2584		AMX 295 -168
	CEN	CRI
	SCN	♦SSI
		UTX
1N2585		AMX 295 -179
	CEN	CRI
	SCN	♦SSI
		UTX
1N2586		AMX 403 - 69
cont.next col.		
1N2586 (cont.)		CEN
	CRI	SCN
	♦SSI	UTX
1N2587		AMX 294 -189
	CEN	CRI
	SCN	SSI
		UTX
1N2588		AMX 294 -219
	CEN	CRI
	SCN	SSI
	UPI	UTX
1N2589		AMX 295 - 34
	CEN	CRI
	SCN	SSI
		UTX
1N2590		AMX 295 - 58
	CEN	CRI
	SCN	SSI
		UTX
1N2591		AMX 295 - 87
	CEN	CRI
	SCN	SSI
		UTX
1N2592		AMX 295 -107
	CEN	CRI
	SCN	SSI
		UTX
1N2593		AMX 295 -134
	CEN	CRI
	SCN	SSI
		UTX
1N2594		AMX 295 -145
	CEN	CRI
	SCN	SSI
	UPI	UTX
1N2595		AMX 295 -169
	CEN	CRI
	SCN	SSI
		UTX
1N2596		AMX 295 -180
	CEN	CRI
	SCN	SSI
		UTX
1N2597		AMX 403 - 70
	CEN	CRI
	SCN	SSI
		UTX
1N2598		AMX 294 -190
	CEN	CRI
	ETC	IDC
	SCN	SSI
	SST	UPI
		UTX
1N2599		AMX 294 -220
	CEN	CRI
	SCN	SSI
		UTX
1N2600		CEN 295 - 35
	CRI	SCN
	SSI	UTX
1N2601		AMX 295 - 59
	CEN	CRI
	SCN	SSI
		UTX
1N2602		AMX 295 - 88
	CEN	CRI
	SCN	SSI
		UTX
1N2603		AMX 295 -108
	CEN	CRI
	SCN	SSI
		UTX
1N2604		AMX 295 -135
	CEN	CRI
	SCN	SSI
		UTX
1N2605		AMX 295 -146
	CEN	CRI
	SCN	SSI
		UTX
1N2606		AMX 295 -170
	CEN	CRI
	SCN	SSI
		UTX
1N2607		AMX 295 -181
	CEN	SCN
	SSI	UTX
1N2608		AMX 403 - 71
	CEN	CRI
	SCN	SSI
		UTX
1N2609		CEN 277 -210
	CRI	EDL
	HTN	IDC
	IDI	SAR
	SCN	SLD
	SPE	SST
1N2610		ASI 278 - 22
	CEN	CRI
	EDL	HTN
	IDI	SAR
	SCN	SLD
	SPE	SST
		WAB
1N2611		ASI 278 - 62
	CEN	CRI
	EDL	HTN
	IDI	SAR
	SCN	SLD
	SPE	SST
	SSY	UPI
		WAB

Δ-Registered with JEDEC by this manufacturer

♦-Mfr's data sheet available in microfilm service

1. TYPE No. CROSS INDEX

IN TYPE NUMBER SEQUENCE

TYPE No.	MFRS	Pg&Line
1N2612	ASI	278 -107
	CRI	
	EDL	
	HTN	
	IDI	
	SAR	
	SCN	
	SLD	
	SPE	
	SST	
	UPI	
	WAB	
1N2613	CEN	278 -144
	CRI	
	EDL	
	HTN	
	IDI	
	SAR	
	SCN	
	SLD	
	SPE	
	SST	
	UPI	
1N2614	CEN	278 -180
	CRI	
	EDL	
	HTN	
	IDI	
	SAR	
	SCN	
	SLD	
	SPE	
	SST	
1N2615	CEN	278 -215
	CRI	
	EDL	
	HTN	
	IDC	
	IDI	
	SAR	
	SCN	
	SLD	
	SPE	
	SST	
1N2616	CEN	279 - 42
	CRI	
	EDL	
	HTN	
	IDC	
	PRX	
	SAR	
	SCN	
	SLD	
	SPE	
	SST	
	THEF	
1N2617	CEN	401 -120
	CRI	
	EDL	
	HTN	
	SAR	
	SCN	
	SLD	
	SPE	
	SST	
	THEF	
1N2618	EDL	406 - 21
	SCN	
1N2619	CEN	411 - 58
	EDL	
	SCN	
	SSI	
1N2620	Δ ♦MOTA	186 - 46
	CRI	
	DII	
	♦GSE	
	IDC	
	MSC	
	SCE	
	SPE	
	SSI	
	UTX	
1N2620A	Δ ♦MOTA	186 - 47
	DII	
	GSE	
	♦MSC	
	SCE	
	SPE	
	SSI	
	UTX	
1N2620B	Δ ♦MOTA	186 - 48
	DII	
	♦GSE	
	♦MSC	
	SCE	
	SSI	
	UTX	
1N2621	Δ ♦MOTA	186 - 49
	CRI	
	DII	
	♦GSE	
	IDC	
	SCE	
	SSI	
	UTX	
	WAB	
1N2621A	Δ ♦MOTA	186 - 50
	DII	
	GSE	
	SCE	
	SPE	
	SSI	
	UTX	
	WAB	
1N2621B	Δ ♦MOTA	186 - 51
	DII	
	♦GSE	
	SCE	
	SSI	
	UTX	
1N2622	Δ ♦MOTA	186 - 52
	CRI	
	DII	
	♦GSE	
	IDC	
	♦MSC	
	SCE	
	SPE	
	SSI	
	UTX	
1N2622A	Δ ♦MOTA	186 - 53
	DII	
	GSE	
	♦MSC	
	SCE	
	SPE	
	SSI	
	UTX	
1N2622B	Δ ♦MOTA	186 - 54
	DII	
	♦GSE	
	♦MSC	
	SCE	
	SSI	
	UTX	
1N2623	Δ ♦MOTA	186 - 55
	CRI	
	DII	
	♦GSE	
	IDC	
	♦MSC	
	SCE	
	SPE	
	SSI	
	UTX	
	WAB	
1N2623A	Δ ♦MOTA	186 - 56
	DII	
	GSE	
	♦MSC	
	SCE	
	SPE	
	SSI	
	UTX	
	WAB	
1N2623B	Δ ♦MOTA	186 - 57
	DII	
	♦GSE	
	♦MSC	
	SCE	
	SSI	
	UTX	
1N2624	Δ ♦MOTA	186 - 58
	CRI	
	DII	
	♦GSE	
	IDC	
	♦MSC	
	SCE	
	SSI	
	UTX	
1N2624A	Δ ♦MOTA	186 - 59
	DII	
	GSE	
	♦MSC	
	SCE	
	SSI	
	UTX	
1N2624B	Δ ♦MOTA	186 - 60
	DII	
	♦GSE	

cont.next col.

TYPE No.	MFRS	Pg&Line
1N2624B (cont.)	♦MSC	
	SCE	
	SSI	
	UTX	
1N2630	AMX	410 -213
	CEI	
	CRI	
	EDI	
	EDL	
	INRJ	
	SAR	
	SCN	
	SOD	
	♦SSI	
	UTX	
1N2631	AMX	412 - 27
	CEI	
	CRI	
	EDI	
	EDL	
	INRJ	
	SAR	
	SCN	
	SOD	
	SPE	
	♦SSI	
	UTX	
1N2632	AMX	418 -154
	CEI	
	CRI	
	EDI	
	EDL	
	INRJ	
	SAR	
	SCN	
	SOD	
	♦SSI	
	UTX	
1N2633	AMX	412 - 28
	CRI	
	EDI	
	EDL	
	INRJ	
	SAR	
	SCN	
	SOD	
	♦SSI	
	UTX	
1N2634	AMX	412 - 29
	CRI	
	EDI	
	EDL	
	INRJ	
	SAR	
	SCN	
	SOD	
	♦SSI	
	UTX	
1N2635	AMX	410 -214
	CRI	
	EDI	
	EDL	
	INRJ	
	SAR	
	SCN	
	SOD	
	♦SSI	
	UTX	
1N2636	AMX	410 -215
	EDI	
	EDL	
	INRJ	
	SCN	
	SOD	
	SSI	
	UTX	
1N2637	AMX	427 - 88
	CEI	
	CRI	
	EDI	
	EDL	
	INRJ	
	SAR	
	SCN	
	SOD	
	SPE	
	SSI	
	UTX	
1N2638	IDC	283 -120
	SCN	
1N2641	SCN	283 -183
1N2644	SCN	284 - 31
1N2647	SCN	284 - 71
1N2650	SCN	284 -173
1N2653	SCN	285 - 36
1N2656	SCN	406 - 84
1N2659	SCN	412 - 58
1N2662	SCN	415 - 57
1N2664	SCN	417 - 8
1N2666	SCN	420 - 58
1N2667	SCN	422 - 3
1N2668	SCN	423 - 31
1N2669	IDC	289 -208
	SCN	
1N2673	SCN	289 -211
1N2677	SCN	289 -214
1N2681	SCN	289 -216
1N2685	SCN	289 -219
1N2687	SCN	290 - 2
1N2689	SCN	290 - 5
1N2690	SCN	406 -128
1N2691	SCN	412 - 81
1N2692	SCN	293 - 28
1N2694	SCN	293 - 29
1N2696	SCN	293 - 30
1N2698	SCN	293 - 31
1N2700	SCN	293 - 32
1N2701	SCN	293 - 33
	SPE	
1N2702	IDC	287 -219
	SCN	
1N2705	SCN	288 - 69
1N2708	SCN	288 -139
1N2711	SCN	288 -171
1N2714	SCN	289 - 35
1N2717	SCN	289 -111
1N2720	SCN	406 -117
1N2722	SCN	412 - 74
1N2723	SCN	415 - 73
1N2724	SCN	417 - 12
1N2725	IDC	287 -220
	SCN	
1N2728	SCN	288 - 70
1N2731	SCN	288 -140
	SPE	
1N2734	SCN	288 -172
1N2737	SCN	289 - 36
1N2738	SCN	289 -112
1N2739	SCN	406 -118
1N2740	EDL	289 -209
	IDC	
	SCN	
1N2742	EDL	289 -212
	SCN	
1N2744	EDL	289 -215
	SCN	
1N2746	EDL	289 -217
	SCN	
1N2748	EDL	289 -220
	SCN	

TYPE No.	MFRS	Pg&Line
1N2749	EDL	290 - 3
	SCN	
1N2750	IDC	288 - 1
	SCN	
1N2753	SCN	288 - 71
1N2756	SCN	288 -141
1N2759	SCN	288 -173
1N2762	SCN	289 - 37
1N2763	SCN	289 -113
1N2764	SCN	406 -119
1N2765	CODI	177 -127
	♦GSE	
	HTN	
	IDC	
	SIEG	
	SPE	
	SSI	
1N2765A	CODI	177 -128
	♦GSE	
	HTN	
	IDC	
	SSI	
1N2766	CODI	193 -145
	DIT	
	♦GSE	
	HTN	
	IDC	
	SIEG	
	SSI	
1N2766A	CODI	193 -146
	♦GSE	
	HTN	
	IDC	
	SSI	
1N2767	CODI	201 - 73
	♦GSE	
	HTN	
	IDC	
	SIEG	
	SPE	
	SSI	
	UPI	
1N2767A	CODI	201 - 74
	♦GSE	
	HTN	
	IDC	
	SPE	
	SSI	
1N2768	CODI	206 - 12
	♦GSE	
	HTN	
	SIEG	
	SSI	
	UPI	
1N2768A	CODI	206 - 13
	♦GSE	
	HTN	
	SSI	
1N2769	CODI	209 - 42
	♦GSE	
	HTN	
	SIEG	
	SSI	
1N2769A	CODI	209 - 43
	♦GSE	
	HTN	
	SSI	
1N2770	CODI	211 -134
	♦GSE	
	HTN	
	SIEG	
	SSI	
1N2770A	CODI	211 -135
	♦GSE	
	HTN	
	SSI	
1N2772	CEN	279 - 15
	IDC	
	SSI	
1N2773	CEN	279 - 29
	IDC	
	SSI	
1N2774	CEN	279 - 53
	IDC	
	SSI	
1N2775	CEN	401 -110
	SSI	
1N2776	CEN	405 - 63
	SSI	
1N2777	CEN	406 - 13
	SSI	
1N2778	CEN	408 -177
	SSI	
1N2779	CEN	409 - 64
	SSI	
1N2780	CEN	411 - 56
	SSI	
1N2781	CEN	412 - 31
	SSI	
1N2784	ΔCOO	298 - 26
	CEN	
	EDL	
	ETC	
	HTN	
	IDC	
	SSI	
	UPI	
	WAB	
1N2785	Δ ♦COO	298 - 39
	CEN	
	EDL	
	ETC	
	HTN	
	IDC	
	SSI	
	UPI	
	WAB	
1N2786	ASI	294 - 29
	CEN	
	HTN	
	IDC	
	SCN	
	SOD	
	SSI	
	UPI	
1N2787	ASI	294 - 77
	CEN	
	HTN	
	IDC	
	SCN	
	SOD	
	SSI	
	UPI	
1N2788	Δ ♦COO	302 -154
	ASI	
	CEN	
	EDL	
	HTN	
	IDC	
	SAR	
	SCN	
	SOD	
	SSI	
	SST	
	WAB	
1N2789	ΔCOO	302 -190
	ASI	
	CEN	
	EDL	
	HTN	
	IDC	
	SAR	
	SCN	
	SOD	
	SSI	
	SST	
1N2790	HTN	183 -101
	SSI	
1N2791	SSI	247 -154
1N2793	CEN	293 -130
	COO	
	EDL	
	ETC	
	HSE	
	HTN	
	IDC	
	SAR	
	SSI	

TYPE No.	MFRS	Pg&Line
1N2794	CEN	293 -135
	COO	
	EDL	
	ETC	
	HSE	
	HTN	
	IDC	
	SAR	
	SSI	
	UPI	
1N2795	CEN	293 -141
	COO	
	EDL	
	ETC	
	HSE	
	HTN	
	IDC	
	SAR	
	SSI	
	UPI	
1N2796	CEN	293 -142
	COO	
	CRI	
	EDL	
	ETC	
	HSE	
	HTN	
	IDC	
	SAR	
	SSI	
	UPI	
1N2797	CEN	293 -148
	COO	
	CRI	
	EDL	
	ETC	
	HSE	
	HTN	
	IDC	
	SAR	
	SSI	
	UPI	
1N2798	CEN	293 -149
	COO	
	CRI	
	EDL	
	ETC	
	HSE	
	HTN	
	IDC	
	SAR	
	SSI	
	UPI	
1N2799	CEN	293 -150
	COO	
	CRI	
	EDL	
	ETC	
	HSE	
	HTN	
	IDC	
	SAR	
	SSI	
	UPI	
1N2800	CEN	293 -151
	COO	
	CRI	
	EDL	
	ETC	
	HSE	
	HTN	
	IDC	
	SAR	
	SPE	
	SSI	
	UPI	
	WAB	
1N2801	♦IDC	250 - 63
1N2804	CEN	379 - 93
	CRI	
	ETC	
	GSE	
	MSC	
	SAR	
	SCE	
	SCN	
	SIEG	
	SLD	
	SPE	
	SST	
	WAB	
1N2804A	Δ ♦MOTA	379 - 88
	CEN	
	ETC	
	GSE	
	MSC	
	SAR	
	SCE	
	SCN	
	SPE	
	SST	
1N2804B	Δ ♦MOTA	379 - 81
	CEN	
	ETC	
	♦GSE	
	♦MSC	
	SAR	
	SCE	
	SCN	
	SIEG	
	SPE	
	SST	
1N2805	CEN	380 - 16
	CRI	
	ETC	
	GSE	
	MSC	
	SAR	
	SCE	
	SCN	
	SIEG	
	SLD	
	SST	
1N2805A	Δ ♦MOTA	380 - 11
	CEN	
	ETC	
	GSE	
	MSC	
	SAR	
	SCE	
	SCN	
	SST	
1N2805B	Δ ♦MOTA	380 - 4
	CEN	
	ETC	
	♦GSE	
	♦MSC	
	SAR	
	SCE	
	SCN	
	♦SIEG	
	SST	
1N2806	CEN	380 -129
	CRI	
	ETC	
	GSE	
	MSC	
	SAR	
	SCE	
	SCN	
	SIEG	
	SLD	
	SPE	
	SST	
1N2806A	Δ ♦MOTA	380 -126
	CEN	
	ETC	
	GSE	
	MSC	
	SAR	
	SCE	
	SCN	
	SST	
1N2806B	Δ ♦MOTA	380 -121
	CEN	
	ETC	
	♦GSE	
	♦MSC	
	SAR	
	SCE	
	SCN	
	♦SIEG	
	SST	
1N2807	CEN	381 - 52
	CRI	
	ETC	
	GSE	
	MSC	
	SAR	
	SCE	
	SCN	
	SIEG	
	SLD	
	SST	
1N2807A	Δ ♦MOTA	381 - 49
	CEN	
	ETC	
	GSE	
	MSC	
	SAR	
	SCE	
	SCN	
	SST	
1N2807B	Δ ♦MOTA	381 - 43
	CEN	
	ETC	
	♦GSE	
	♦MSC	
	SAR	
	SCE	

cont.next col.

TYPE No.	MFRS	Pg&Line
1N2807B (cont.)	SCN	
	♦SIEG	
	SST	
1N2808	CEN	381 -160
	CRI	
	ETC	
	GSE	
	MSC	
	SAR	
	SCE	
	SCN	
	SIEG	
	SLD	
	SST	
1N2808A	Δ ♦MOTA	381 -157
	CEN	
	ETC	
	GSE	
	MSC	
	SAR	
	SCE	
	SCN	
	SPE	
	SST	
1N2808B	Δ ♦MOTA	381 -152
	CEN	
	ETC	
	♦GSE	
	♦MSC	
	SAR	
	SCE	
	SCN	
	♦SIEG	
	SST	
1N2809	CEN	382 - 48
	CRI	
	ETC	
	GSE	
	MSC	
	SAR	
	SCE	
	SCN	
	SIEG	
	SLD	
	SPE	
	SST	
1N2809A	Δ ♦MOTA	382 - 45
	CEN	
	ETC	
	GSE	
	MSC	
	SAR	
	SCE	
	SCN	
	SST	
1N2809B	Δ ♦MOTA	382 - 40
	CEN	
	ETC	
	♦GSE	
	♦MSC	
	SAR	
	SCE	
	SCN	
	♦SIEG	
	SPE	
	SST	
1N2810	CEN	382 -171
	CRI	
	ETC	
	GSE	
	MSC	
	SAR	
	SCE	
	SCN	
	SIEG	
	SLD	
	SST	
1N2810A	Δ ♦MOTA	382 -168
	CEN	
	ETC	
	GSE	
	MSC	
	SAR	
	SCE	
	SCN	
	SST	
1N2810B	Δ ♦MOTA	382 -163
	CEN	
	ETC	
	♦GSE	
	♦MSC	
	SAR	
	SCE	
	SCN	
	♦SIEG	
	SPE	
	SST	
	TIC	
1N2811	CEN	383 - 78
	CRI	
	ETC	
	GSE	
	MSC	
	SAR	
	SCE	
	SCN	
	SIEG	
	SLD	
	SST	
1N2811A	Δ ♦MOTA	383 - 75
	CEN	
	ETC	
	GSE	
	MSC	
	SAR	
	SCE	
	SCN	
	SST	
1N2811B	Δ ♦MOTA	383 - 70
	CEN	
	ETC	
	♦GSE	
	♦MSC	
	SAR	
	SCE	
	SCN	
	♦SIEG	
	SPE	
	SST	
1N2812	CEN	383 -148
	CRI	
	ETC	
	GSE	
	MSC	
	SCE	
	SCN	
	SIEG	
	SLD	
	SST	
	UPI	
1N2812A	Δ ♦MOTA	383 -145
	CEN	
	ETC	
	GSE	
	MSC	
	SCE	
	SCN	
	SST	
1N2812B	Δ ♦MOTA	383 -141
	CEN	
	ETC	
	♦GSE	
	♦MSC	
	SCE	
	SCN	
	♦SIEG	
	SST	
1N2813	CEN	384 - 57
	CRI	
	ETC	
	GSE	
	MSC	
	SAR	
	SCE	
	SCN	
	SIEG	
	SLD	
	SST	
1N2813A	Δ ♦MOTA	384 - 54
	CEN	
	ETC	
	GSE	
	MSC	
	SAR	
	SCE	
	SCN	
	SST	
1N2813B	Δ ♦MOTA	384 - 49
	CEN	
	ETC	
	♦GSE	
	♦MSC	
	SAR	
	SCE	
	SCN	
	♦SIEG	
	SPE	
	SST	
1N2814	CEN	384 -154
	CRI	
	ETC	
	GSE	
	MSC	
	SAR	
	SCE	
	SCN	
	SIEG	

cont.next page

Δ-Registered with JEDEC by this manufacturer

♦-Mfr's data sheet available in microfilm service

1. TYPE No. CROSS INDEX

IN TYPE NUMBER SEQUENCE

TYPE No.	MFRS	Pg&Line
1N2814		
(cont.)	SLD	
	SPE	
	SST	
1N2814A	Δ♦MOTA	384 -151
	CEN	
	ETC	
	GSE	
	MSC	
	SAR	
	SCE	
	SCN	
	SST	
1N2814B	Δ♦MOTA	384 -146
	CEN	
	ETC	
	♦GSE	
	♦MSC	
	SAR	
	SCE	
	SCN	
	♦SIEG	
	SST	
1N2815	CEN	385 - 11
	CRI	
	ETC	
	GSE	
	MSC	
	SCE	
	SCN	
	SIEG	
	SLD	
	SST	
1N2815A	Δ♦MOTA	385 - 8
	CEN	
	ETC	
	GSE	
	MSC	
	SCE	
	SCN	
	SST	
1N2815B	Δ♦MOTA	385 - 4
	CEN	
	ETC	
	♦GSE	
	♦MSC	
	SCE	
	SCN	
	♦SIEG	
	SST	
1N2816	CEN	385 -119
	CRI	
	ETC	
	GSE	
	MSC	
	SAR	
	SCE	
	SCN	
	SIEG	
	SLD	
	SPE	
	SST	
1N2816A	Δ♦MOTA	385 -116
	CEN	
	ETC	
	GSE	
	MSC	
	SAR	
	SCE	
	SCN	
	SPE	
	SST	
1N2816B	Δ♦MOTA	385 -111
	CEN	
	ETC	
	♦GSE	
	♦MSC	
	SAR	
	SCE	
	SCN	
	♦SIEG	
	SPE	
	SST	
1N2817	CEN	385 -167
	CRI	
	ETC	
	GSE	
	MSC	
	SCE	
	SCN	
	SIEG	
	SLD	
	SST	
1N2817A	Δ♦MOTA	385 -164
	CEN	
	ETC	
	GSE	
	MSC	
	SCE	
	SCN	
	SST	
1N2817B	Δ♦MOTA	385 -160
	CEN	
	ETC	
	♦GSE	
	♦MSC	
	SAR	
	SCE	
	SCN	
	♦SIEG	
	SST	
1N2818	CEN	386 - 66
	CRI	
	ETC	
	GSE	
	MSC	
	SAR	
	SCE	
	SCN	
	SIEG	
	SLD	
	SPE	
	SST	
1N2818A	Δ♦MOTA	386 - 63
	CEN	
	ETC	
	GSE	
	MSC	
	SAR	
	SCE	
	SCN	
	SST	
1N2818B	Δ♦MOTA	386 - 58
	CEN	
	ETC	
	♦GSE	
	♦MSC	
	SAR	
	SCE	
	SCN	
	♦SIEG	
	SST	
1N2819	CEN	386 -173
	CRI	
	ETC	
	GSE	
	MSC	
	SAR	
	SCE	
	SCN	
	SIEG	
	SLD	
	SST	
1N2819A	Δ♦MOTA	386 -170
	CEN	
	ETC	
	GSE	
	MSC	
	SAR	
	SCE	
	SCN	
	SST	
1N2819B	Δ♦MOTA	386 -165
	CEN	
	ETC	
	♦GSE	
	♦MSC	
	SAR	
	SCE	
	SCN	
	♦SIEG	
	SST	
1N2820	CEN	387 - 86
	CRI	
	ETC	
	GSE	
	MSC	
	SAR	
	SCE	
	SCN	
	SIEG	
	SLD	
	SST	
1N2820A	Δ♦MOTA	387 - 83
	CEN	
	ETC	
	GSE	
	MSC	
	SAR	
	SCE	
	SCN	
	SST	
1N2820B	Δ♦MOTA	387 - 78
cont.next col.		

TYPE No.	MFRS	Pg&Line
1N2820B		
(cont.)	CEN	
	ETC	♦GSE
	♦MSC	SAR
	SCE	SCN
	♦SIEG	SPE
		SST
1N2821	CEN	387 -128
	CRI	ETC
	GSE	MSC
	SCE	SCN
	SIEG	SLD
	SPE	SST
1N2821A	Δ♦MOTA	387 -125
	CEN	ETC
	GSE	MSC
	SCE	SCN
		SST
1N2821B	Δ♦MOTA	387 -121
	CEN	ETC
	♦GSE	♦MSC
	SCE	SCN
	♦SIEG	SST
1N2822	CEN	388 - 28
	CRI	ETC
	GSE	MSC
	SAR	SCE
	SCN	SIEG
	SLD	SPE
		SST
1N2822A	Δ♦MOTA	388 - 25
	CEN	ETC
	GSE	MSC
	SAR	SCE
	SCN	SST
1N2822B	Δ♦MOTA	388 - 20
	CEN	ETC
	♦GSE	♦MSC
	SAR	SCE
	SCN	♦SIEG
	SST	UPI
1N2823	CEN	388 -144
	CRI	ETC
	GSE	MSC
	SAR	SCE
	SCN	SIEG
	SLD	SPE
		SST
1N2823A	Δ♦MOTA	388 -141
	CEN	ETC
	GSE	MSC
	SAR	SCE
	SCN	SST
1N2823B	Δ♦MOTA	388 -136
	CEN	ETC
	♦GSE	♦MSC
	SAR	SCE
	SCN	♦SIEG
	SST	UPI
1N2824	CEN	389 - 53
	CRI	ETC
	GSE	MSC
	SAR	SCE
	SCN	SIEG
	SLD	SST
1N2824A	Δ♦MOTA	389 - 50
	CEN	ETC
	GSE	MSC
	SAR	SCE
	SCN	SST
1N2824B	Δ♦MOTA	389 - 45
	CEN	ETC
	♦GSE	♦MSC
	SAR	SCE
	SCN	♦SIEG
	SPE	SST
1N2825	CEN	389 -162
	CRI	ETC
	GSE	MSC
	SAR	SCE
	SCN	SIEG
	SLD	SST
1N2825A	Δ♦MOTA	389 -159
	CEN	ETC
	GSE	MSC
	SAR	SCE
	SCN	SST
1N2825B	Δ♦MOTA	389 -154
	CEN	ETC
	♦GSE	♦MSC
	SAR	SCE
	SCN	♦SIEG
		SST
1N2826	CEN	390 - 53
	CRI	ETC
	GSE	MSC
	SAR	SCE
	SCN	SIEG
	SLD	SST
1N2826A	Δ♦MOTA	390 - 50
	CEN	ETC
	GSE	MSC
	SAR	SCE
	SCN	SST
1N2826B	Δ♦MOTA	390 - 45
	CEN	ETC
	♦GSE	♦MSC
	SAR	SCE
	SCN	♦SIEG
		SST
1N2827	CEN	390 -159
	CRI	ETC
	GSE	MSC
cont.next col.		

TYPE No.	MFRS	Pg&Line
1N2827	SAR	
(cont.)	SCE	SCN
	SIEG	SLD
		SST
1N2827A	Δ♦MOTA	390 -156
	CEN	ETC
	GSE	MSC
	SAR	SCE
	SCN	SST
1N2827B	Δ♦MOTA	390 -151
	CEN	ETC
	♦GSE	♦MSC
	SAR	SCE
	SCN	♦SIEG
		SST
1N2828	CEN	391 - 12
	CRI	ETC
	GSE	MSC
	SAR	SCE
	SCN	SIEG
	SLD	SST
1N2828A	Δ♦MOTA	391 - 9
	CEN	ETC
	GSE	MSC
	SAR	SCE
	SCN	SST
1N2828B	Δ♦MOTA	391 - 5
	CEN	ETC
	♦GSE	♦MSC
	SAR	SCE
	SCN	♦SIEG
	SPE	SST
1N2829	CEN	391 - 95
	CRI	ETC
	GSE	MSC
	SAR	SCE
	SCN	SIEG
	SLD	SST
1N2829A	Δ♦MOTA	391 - 92
	CEN	ETC
	GSE	MSC
	SAR	SCE
	SCN	SST
1N2829B	Δ♦MOTA	391 - 87
	CEN	ETC
	♦GSE	♦MSC
	SAR	SCE
	SCN	♦SIEG
		SST
1N2830	CEN	391 -151
	CRI	ETC
	GSE	MSC
	SAR	SCE
	SCN	SLD
		SST
1N2830A	Δ♦MOTA	391 -148
	CEN	ETC
	GSE	MSC
	SAR	SCE
	SCN	SST
1N2830B	Δ♦MOTA	391 -144
	CEN	ETC
	♦GSE	♦MSC
	SAR	SCE
	SCN	♦SIEG
		SST
1N2831	CEN	392 - 25
	CRI	ETC
	GSE	MSC
	SAR	SCE
	SCN	SIEG
	SLD	SPE
		SST
1N2831A	Δ♦MOTA	392 - 22
	CEN	ETC
	GSE	MSC
	SAR	SCE
	SCN	SST
1N2831B	Δ♦MOTA	392 - 17
	CEN	ETC
	♦GSE	♦MSC
	SAR	SCE
	SCN	♦SIEG
		SST
1N2832	CEN	392 -152
	CRI	ETC
	GSE	MSC
	SAR	SCE
	SCN	SIEG
	SLD	SST
1N2832A	Δ♦MOTA	392 -149
	CEN	ETC
	GSE	MSC
	SAR	SCE
	SCN	SPE
		SST
1N2832B	Δ♦MOTA	392 -145
	CEN	ETC
	♦GSE	♦MSC
	SAR	SCE
	SCN	♦SIEG
	SPE	SST
1N2833	CEN	393 - 65
	CRI	ETC
	GSE	MSC
	SAR	SCE
	SCN	SIEG
	SLD	SST
1N2833A	Δ♦MOTA	393 - 62
	CEN	ETC
	GSE	MSC
	SAR	SCE
	SCN	SST

TYPE No.	MFRS	Pg&Line
1N2833B	Δ♦MOTA	393 - 57
	CEN	ETC
	♦GSE	♦MSC
	SAR	SCE
	SCN	♦SIEG
	SPE	SST
1N2834	CEN	393 -159
	CRI	ETC
	GSE	MSC
	SAR	SCE
	SCN	SIEG
	SLD	SST
1N2834A	Δ♦MOTA	393 -156
	CEN	ETC
	GSE	MSC
	SAR	SCE
	SCN	SPE
		SST
1N2834B	Δ♦MOTA	393 -151
	CEN	ETC
	♦GSE	♦MSC
	SAR	SCE
	SCN	♦SIEG
		SST
1N2835	CEN	394 - 81
	CRI	ETC
	GSE	MSC
	SAR	SCE
	SCN	SIEG
	SLD	SST
1N2835A	Δ♦MOTA	394 - 78
	CEN	ETC
	GSE	MSC
	SAR	SCE
	SCN	SPE
		SST
1N2835B	Δ♦MOTA	394 - 73
	CEN	ETC
	♦GSE	♦MSC
	SAR	SCE
	SCN	♦SIEG
		SST
1N2836	CEN	394 -184
	CRI	ETC
	GSE	MSC
	SAR	SCE
	SCN	SIEG
	SLD	SST
1N2836A	Δ♦MOTA	394 -181
	CEN	ETC
	GSE	MSC
	SAR	SCE
	SCN	SST
1N2836B	Δ♦MOTA	394 -176
	CEN	ETC
	♦GSE	♦MSC
	SAR	SCE
	SCN	♦SIEG
	SPE	SST
1N2837	CEN	395 - 93
	CRI	ETC
	GSE	MSC
	SAR	SCE
	SCN	SIEG
	SLD	SST
1N2837A	Δ♦MOTA	395 - 90
	CEN	ETC
	GSE	MSC
	SAR	SCE
	SCN	SST
1N2837B	Δ♦MOTA	395 - 85
	CEN	ETC
	♦GSE	♦MSC
	SAR	SCE
	SCN	♦SIEG
	SPE	SST
1N2838	CEN	396 - 5
	CRI	ETC
	GSE	MSC
	SAR	SCE
	SCN	SIEG
	SLD	SPE
	SST	UPI
1N2838A	Δ♦MOTA	396 - 2
	CEN	ETC
	GSE	MSC
	SAR	SCE
	SCN	SST
1N2838B	Δ♦MOTA	395 -195
	CEN	ETC
	♦GSE	♦MSC
	SAR	SCE
	SCN	♦SIEG
		SST
1N2839	CEN	396 - 42
	CRI	ETC
	GSE	MSC
	SAR	SCE
	SCN	SIEG
	SLD	SST
1N2839A	Δ♦MOTA	396 - 39
	CEN	ETC
	GSE	MSC
	SAR	SCE
	SCN	SST
1N2839B	Δ♦MOTA	396 - 35
	CEN	ETC
	♦GSE	♦MSC
	SAR	SCE
	SCN	♦SIEG
		SST
1N2840	CEN	396 -120
	CRI	ETC
cont.next col.		

TYPE No.	MFRS	Pg&Line
1N2840		
(cont.)	GSE	
	MSC	SAR
	SCE	SCN
	SIEG	SLD
		SST
1N2840A	Δ♦MOTA	396 -117
	CEN	ETC
	GSE	MSC
	SAR	SCE
	SCN	SST
1N2840B	Δ♦MOTA	396 -112
	CEN	ETC
	♦GSE	♦MSC
	SAR	SCE
	SCN	♦SIEG
		SST
1N2841	CEN	397 - 10
	CRI	ETC
	GSE	MSC
	SAR	SCE
	SCN	SIEG
	SLD	SPE
		SST
1N2841A	Δ♦MOTA	397 - 7
	CEN	ETC
	GSE	MSC
	SAR	SCE
	SCN	SST
1N2841B	Δ♦MOTA	397 - 2
	CEN	ETC
	♦GSE	♦MSC
	SAR	SCE
	SCN	♦SIEG
	SPE	SST
1N2842	CEN	397 - 96
	ETC	GSE
	MSC	SAR
	SCE	SCN
	SIEG	SLD
		SST
1N2842A	Δ♦MOTA	397 - 93
	CEN	CRI
	ETC	GSE
	MSC	SAR
	SCE	SCN
	SPE	SST
		UPI
1N2842B	Δ♦MOTA	397 - 88
	CEN	ETC
	♦GSE	♦MSC
	SAR	SCE
	SCN	♦SIEG
		SST
1N2843	CEN	398 - 39
	CRI	ETC
	GSE	MSC
	SAR	SCE
	SCN	SIEG
	SLD	SST
1N2843A	Δ♦MOTA	398 - 36
	CEN	ETC
	GSE	MSC
	SAR	SCE
	SCN	SST
		UPI
1N2843B	Δ♦MOTA	398 - 31
	CEN	ETC
	♦GSE	♦MSC
	SAR	SCE
	SCN	♦SIEG
		SST
1N2844	CEN	398 -116
	CRI	ETC
	GSE	MSC
	SAR	SCE
	SCN	SIEG
	SLD	SST
1N2844A	Δ♦MOTA	398 -113
	CEN	ETC
	GSE	MSC
	SAR	SCE
	SCN	SST
1N2844B	Δ♦MOTA	398 -108
	CEN	ETC
	♦GSE	♦MSC
	SAR	SCE
	SCN	♦SIEG
		SST
1N2845	CEN	399 - 42
	CRI	ETC
	GSE	MSC
	SAR	SCE
	SCN	SIEG
	SLD	SST
1N2845A	Δ♦MOTA	399 - 39
	CEN	ETC
	GSE	MSC
	SAR	SCE
	SCN	SST
1N2845B	Δ♦MOTA	399 - 34
	CEN	ETC
	♦GSE	♦MSC
	SAR	SCE
	SCN	♦SIEG
	SST	UPI
1N2846	CEN	399 -137
	DIT	ETC
	GSE	MSC
	SAR	SCE
	SCN	SIEG
	SLD	SPE
		SST

Δ-Registered with JEDEC by this manufacturer

♦-Mfr's data sheet available in microfilm service

1. TYPE No. CROSS INDEX

IN TYPE NUMBER SEQUENCE

TYPE No.	MFRS	Pg&Line
1N2846A	Δ♦MOTA	399 -134
	CEN	
	DIT	
	GSE	
	SAR	
	SCN	
	SST	
	UPI	
1N2846B	Δ♦MOTA	399 -129
	CEN	
	DIT	
	ETC	
	♦GSE	
	♦MSC	
	SAR	
	SCE	
	SCN	
	♦SIEG	
	SPE	
	SST	
	UPI	
1N2847	AMX	283 -163
	CEN	
	CRI	
	SCN	
	SSI	
	UTX	
1N2848	AMX	284 - 11
	CEN	
	CRI	
	SCN	
	UTX	
1N2849	AMX	284 - 56
	CEN	
	CRI	
	SCN	
	SSI	
	UTX	
1N2850	AMX	284 -119
	CEN	
	CRI	
	SCN	
	SSI	
	UTX	
1N2851	AMX	284 -150
	CEN	
	CRI	
	SCN	
	SSI	
	UTX	
1N2852	AMX	284 -193
	CEN	
	CRI	
	SCN	
	SSI	
	UTX	
1N2858	CEI	277 -218
	CEN	
	ETC	
	SAR	
	SCN	
	SPE	
	SSI	
1N2858A	CEI	280 - 14
	CEN	
	ETC	
	IDC	
	SCN	
	SSI	
	UPI	
1N2859	ASI	278 - 30
	CEN	
	CRI	
	ETC	
	IDC	
	SAR	
	SCN	
	SPE	
	SSI	
	WAB	
1N2859A	ASI	280 - 91
	CEI	
	CEN	
	ETC	
	IDC	
	SCN	
	SSI	
	UPI	
	WAB	
1N2860	CEN	278 - 75
	CRI	
	ETC	
	IDC	
	SAR	
	SCN	
	SPE	
	SSI	
1N2860A	CEI	280 -189
	CEN	
	IDC	
	SCN	
	SSI	
	UPI	
1N2861	CEN	278 -114
	CRI	
	ETC	
	SAR	
	SCN	
	SSI	
1N2861A	CEI	281 - 20
	CEN	
	ETC	
	IDC	
	SCN	
	SPE	
	SSI	
	UPI	
1N2862	CEN	278 -155
	CRI	
	ETC	
	IDC	
	SAR	
	SCN	
	SSI	
1N2862A	CEI	281 - 94
	CEN	
	ETC	
	IDC	
	SCN	
	SSI	
	UPI	
1N2863	CEN	278 -187
	CRI	
	ETC	
	IDC	
	SAR	
	SCN	
	SSI	
1N2863A	CEI	281 -146
	CEN	
	CRI	
	ETC	
	IDC	
	SCN	
	SSI	
1N2864	ASI	279 - 9
	CEN	
	CRI	
	ETC	
	IDC	
	SAR	
	SCN	
	SPE	
	SSI	
	WAB	
1N2864A	CEI	281 -207
	CEN	
	ETC	
	IDC	
	SCN	
	SSI	
	WAB	
1N2865	CEN	401 -109
	CRI	
	SCN	
1N2866	CEN	411 - 54
	CRI	
	SCN	
1N2878	♦CODI	275 -191
	CRI	
	EDL	
	SCN	
	SSI	
1N2879	♦CODI	275 -192
	CRI	
	EDL	
	IDC	
	SCN	
	SSI	
	UTX	
1N2880	♦CODI	401 - 58
	CRI	
	EDL	

cont.next col.

TYPE No.	MFRS	Pg&Line
1N2880		
(cont.)		
	SCN	
	SPE	
	SSI	
	UTX	
1N2881	♦CODI	401 - 59
	CRI	
	EDL	
	SCN	
	SSI	
	UTX	
1N2882	CRI	401 - 60
	EDL	
	SCN	
	SSI	
	UTX	
1N2883	♦CODI	401 - 61
	CRI	
	EDL	
	SCN	
	SPE	
	SSI	
	UTX	
1N2884	♦CODI	409 - 58
	CRI	
	EDL	
	SCN	
	SSI	
	UTX	
1N2885	♦CODI	409 - 59
	CRI	
	EDL	
	SCN	
	SSI	
	UTX	
1N2886	CODI	411 - 13
	CRI	
	EDL	
	SCN	
	SSI	
	UTX	
1N2887	♦CODI	411 - 14
	CRI	
	EDL	
	SCN	
	SSI	
	♦THEF	
	UTX	
1N2888	♦CODI	413 -142
	EDL	
	SCN	
	UTX	
1N2889	♦CODI	413 -143
	CRI	
	EDL	
	SCN	
	SSI	
	UTX	
1N2890	♦CODI	414 -218
	CRI	
	EDL	
	SCN	
	SSI	
	UTX	
1N2891	♦CODI	414 -219
	CRI	
	EDL	
	SCN	
	SSI	
	♦THEF	
	UTX	
1N2892	♦CODI	416 - 26
	CRI	
	EDL	
	SCN	
	SSI	
	UTX	
1N2893	♦CODI	416 - 27
	CRI	
	EDL	
	SCN	
	SSI	
	UTX	
1N2894	♦CODI	416 -211
	CRI	
	EDL	
	SCN	
	SSI	
	SSY	
	UTX	
1N2895	♦CODI	416 -212
	CRI	
	EDL	
	SCN	
	SSI	
	UTX	
1N2896	♦CODI	417 -121
	CRI	
	EDL	
	SCN	
	SSI	
	UTX	
1N2897	♦CODI	417 -122
	CRI	
	EDL	
	SCN	
	SSI	
	♦THEF	
	UTX	
1N2898	♦CODI	418 -156
	EDL	
	SCN	
	SSI	
	UTX	
1N2899	♦CODI	418 -157
	CRI	
	EDL	
	SCN	
	SSI	
	UTX	
1N2900	♦CODI	419 - 88
	CRI	
	EDL	
	SCN	
	SSI	
	UTX	
1N2901	ASI	419 - 89
	♦CODI	
	CRI	
	EDL	
	SCN	
	SSI	
	♦THEF	
	UTX	
	WAB	
1N2902	♦CODI	420 - 28
	CRI	
	EDL	
	SCN	
	SSI	
	UTX	
1N2903	♦CODI	420 - 29
	CRI	
	EDL	
	SCN	
	SSI	
	UTX	
1N2904	♦CODI	420 -179
	CRI	
	EDL	
	SCN	
	SSI	
	UTX	
1N2905	♦CODI	420 -180
	CRI	
	EDL	
	SCN	
	SSI	
	♦THEF	
	UTX	
1N2906	♦CODI	420 -181
	CRI	
	EDL	
	SCN	
	SSI	
	UTX	
1N2907	♦CODI	420 -182
	CRI	
	EDL	
	SCN	
	SSI	
	UTX	
1N2908	♦CODI	421 - 74
	CRI	
	EDL	
	SCN	
	SSI	
	UTX	

TYPE No.	MFRS	Pg&Line
1N2909	♦CODI	421 - 75
	CRI	
	EDL	
	SCN	
	SSI	
	UTX	
1N2910	♦CODI	421 -174
	CRI	
	EDL	
	SCN	
	SSI	
	UTX	
1N2911	ASI	421 -175
	♦CODI	
	CRI	
	EDL	
	SCN	
	SSI	
	♦THEF	
	UTX	
	WAB	
1N2912	♦CODI	422 -102
	CRI	
	EDL	
	SCN	
	SSI	
	UTX	
1N2913	♦CODI	422 -103
	CRI	
	EDL	
	SCN	
	SSI	
	UTX	
1N2914	♦CODI	422 -196
	CRI	
	EDL	
	SCN	
	SSI	
	UTX	
1N2915	♦CODI	422 -197
	CRI	
	EDL	
	SCN	
	SSI	
	♦THEF	
	UPI	
	UTX	
1N2916	♦CODI	422 -198
	CRI	
	EDL	
	SCN	
	SSI	
	UTX	
1N2917	♦CODI	422 -199
	CRI	
	EDL	
	SCN	
	SSI	
	UTX	
1N2918	♦CODI	423 -123
	CRI	
	EDL	
	SCN	
	SSI	
	UTX	
1N2919	♦CODI	423 -124
	CRI	
	EDL	
	SCN	
	SSI	
	♦THEF	
	UTX	
1N2920	♦CODI	424 - 96
	CRI	
	EDL	
	SCN	
	SSI	
	UTX	
1N2921	♦CODI	424 - 97
	CRI	
	EDL	
	SCN	
	SSI	
	♦THEF	
	UTX	
1N2922	♦CODI	424 -175
	CRI	
	EDL	
	SCN	
	SPE	
	SSI	
	UTX	
1N2923	♦CODI	424 -176
	CRI	
	EDL	
	SCN	
	SSI	
	♦THEF	
	UTX	
1N2924	CODI	425 - 44
	CRI	
	EDL	
	SCN	
	SSI	
	UTX	
1N2925	♦CODI	425 - 45
	CRI	
	EDL	
	SCN	
	SPE	
	SSI	
	♦THEF	
	UTX	
1N2937	IDC	391 -139
	MSC	
	SIEG	
	SSI	
1N2938	IDC	163 - 47
	SSI	
1N2970	CEN	379 - 66
	CRI	
	DII	
	ETC	
	GSE	
	HTN	
	IDC	
	MSC	
	NJS	
	SAR	
	SCE	
	SCN	
	SIEG	
	SLD	
	SSI	
	SST	
	TRWS	
	WAB	
1N2970A	Δ♦MOTA	379 - 56
	CEN	
	DII	
	ETC	
	GSE	
	HTN	
	IDC	
	MSC	
	NJS	
	SAR	
	SCE	
	SCN	
	SSI	
	SST	
	TRWS	
	WAB	
1N2970B	Δ♦MOTA	379 - 44
	CEN	
	DII	
	ETC	
	♦GSE	
	HTN	
	IDC	
	♦MSC	
	SAR	
	SCE	
	SCN	
	♦SIEG	
	SPE	
	SSI	
	SST	
	THEF	
	TRWS	
	WAB	
1N2971	CEN	379 -197
	CRI	
	DII	
	ETC	
	GSE	
	HTN	
	IDC	
	MSC	
	NJS	
	SAR	
	SCE	
	SCN	
	SIEG	
	SLD	
	SPE	

cont.next col.

TYPE No.	MFRS	Pg&Line
1N2971		
(cont.)		
	SSI	
	SST	
	TRWS	
1N2971A	Δ♦MOTA	379 -187
	AMR	
	CEN	
	DII	
	ETC	
	GSE	
	HTN	
	IDC	
	MSC	
	NJS	
	SAR	
	SCE	
	SCN	
	SSI	
	SST	
	TRWS	
1N2971B	Δ♦MOTA	379 -177
	AMR	
	CEN	
	DII	
	ETC	
	♦GSE	
	HTN	
	IDC	
	♦MSC	
	SAR	
	SCE	
	SCN	
	♦SIEG	
	SPE	
	SSI	
	SST	
	THEF	
	TRWS	
	WAB	
1N2972	CEN	380 -106
	CRI	
	DII	
	DIT	
	ETC	
	GSE	
	HTN	
	IDC	
	MSC	
	NJS	
	SAR	
	SCE	
	SCN	
	SIEG	
	SLD	
	SPE	
	SSI	
	SST	
	TRWS	
1N2972A	Δ♦MOTA	380 - 97
	CEN	
	DII	
	ETC	
	GSE	
	HTN	
	IDC	
	MSC	
	NJS	
	SAR	
	SCE	
	SCN	
	SPE	
	SSI	
	SST	
	TRWS	
	WAB	
1N2972B	Δ♦MOTA	380 - 85
	CEN	
	DII	
	ETC	
	♦GSE	
	HTN	
	IDC	
	♦MSC	
	SAR	
	SCE	
	SCN	
	♦SIEG	
	SSI	
	SST	
	THEF	
	TRWS	
1N2973	CEN	381 - 27
	CRI	
	DII	
	DIT	
	ESP	
	ETC	
	GSE	
	HTN	
	IDC	
	MSC	
	NJS	
	SAR	
	SCE	
	SCN	
	SIEG	
	SLD	
	SPE	
	SSI	
	SST	
	TRWS	
1N2973A	Δ♦MOTA	381 - 17
	CEN	
	DII	
	ESP	
	ETC	
	GSE	
	HTN	
	IDC	
	MSC	
	NJS	
	SAR	
	SCE	
	SCN	
	SPE	
	SSI	
	SST	
	TRWS	
1N2973B	Δ♦MOTA	381 - 5
	CEN	
	DII	
	ESP	
	ETC	
	♦GSE	
	HTN	
	IDC	
	♦MSC	
	SAR	
	SCE	
	SCN	
	♦SIEG	
	SPE	
	SSI	
	SST	
	THEF	
	TRWS	
	UPI	
1N2974	CEN	381 -137
	CRI	
	DII	
	DIT	
	ESP	
	ETC	
	GSE	
	HTN	
	IDC	
	MSC	
	NJS	
	SAR	
	SCE	
	SCN	
	SIEG	
	SLD	
	SPE	
	SSI	
	SST	
	UPI	
1N2974A	Δ♦MOTA	381 -127
	CEN	
	DII	
	ESP	
	ETC	
	GSE	
	HTN	
	IDC	
	MSC	
	NJS	
	SAR	
	SCE	
	SCN	
	SIEG	
	SSI	
	SST	
	UPI	
1N2974B	Δ♦MOTA	381 -112
	CEN	
	DII	
	ESP	
	ETC	
	♦GSE	
	HTN	
	IDC	
	♦MSC	
	SAR	
	SCE	
	SCN	
	♦SIEG	
	SPE	
	SSI	
	SST	
	THEF	
	TRWS	
	UPI	
	WAB	
1N2975	CEN	382 - 25
	CRI	
	DII	
	DIT	
	ESP	

cont.next col.

TYPE No.	MFRS	Pg&Line
1N2975		
(cont.)		
	ETC	
	GSE	
	HTN	
	IDC	
	MSC	
	NJS	
	SAR	
	SCE	
	SCN	
	SIEG	
	SLD	
	SSI	
	SST	
1N2975A	Δ♦MOTA	382 - 15
	CEN	
	DII	
	ESP	
	ETC	
	GSE	
	HTN	
	IDC	
	MSC	
	NJS	
	SAR	
	SCE	
	SCN	
	SSI	
	SST	
1N2975B	Δ♦MOTA	382 - 3
	CEN	
	DII	
	ESP	
	ETC	
	♦GSE	
	HTN	
	IDC	
	♦MSC	
	SAR	
	SCE	
	SCN	
	♦SIEG	
	SPE	
	SSI	
	SST	
	THEF	
1N2976	CEN	382 -147
	CRI	
	DII	
	DIT	
	ESP	
	ETC	
	GSE	
	HTN	
	IDC	
	MSC	
	NJS	
	SAR	
	SCE	
	SCN	
	SIEG	
	SLD	
	SPE	
	SSI	
	SST	
	WAB	
1N2976A	Δ♦MOTA	382 -136
	CEN	
	DII	
	ESP	
	ETC	
	GSE	
	HTN	
	IDC	
	MSC	
	NJS	
	SAR	
	SCE	
	SCN	
	SPE	
	SSI	
	SST	
	UPI	
	WAB	
1N2976B	Δ♦MOTA	382 -120
	CEN	
	DII	
	ESP	
	ETC	
	♦GSE	
	HTN	
	IDC	
	♦MSC	
	SAR	
	SCE	
	SCN	
	♦SIEG	
	SPE	
	SSI	
	SST	
	THEF	
	WAB	
1N2977	CEN	383 - 54
	CRI	
	DII	
	DIT	
	ESP	
	ETC	
	GSE	
	HTN	
	IDC	
	MSC	
	NJS	
	SAR	
	SCE	
	SCN	
	SIEG	
	SLD	
	SSI	
	SST	
	UPI	
	WAB	
1N2977A	Δ♦MOTA	383 - 43
	CEN	
	DII	
	ESP	
	ETC	
	GSE	
	HTN	
	IDC	
	MSC	
	NJS	
	SAR	
	SCE	
	SCN	
	SIEG	
	SSI	
	SST	
1N2977B	Δ♦MOTA	383 - 30
	CEN	
	DII	
	ESP	
	ETC	
	♦GSE	
	HTN	
	IDC	
	♦MSC	
	SAR	
	SCE	
	SCN	
	♦SIEG	
	SSI	
	SST	
	THEF	
	WAB	
1N2978	CEN	383 -131
	DII	
	DIT	
	ESP	
	ETC	
	GSE	
	HTN	
	IDC	
	MSC	
	NJS	
	SAR	
	SCE	
	SCN	
	SIEG	
	SSI	
	SST	
1N2978A	Δ♦MOTA	383 -124
	CEN	
	DII	
	ESP	
	ETC	
	GSE	
	HTN	
	IDC	
	MSC	
	NJS	
	SAR	
	SCE	
	SCN	
	SPE	
	SSI	
	SST	
1N2978B	Δ♦MOTA	383 -118
	CEN	
	DII	
	ESP	
	ETC	
	♦GSE	
	HTN	
	IDC	
	♦MSC	
	SAR	
	SCE	
	SCN	
	♦SIEG	
	SSI	
	SST	
	WAB	
1N2979	CEN	384 - 32

cont.next page

Δ-Registered with JEDEC by this manufacturer

♦-Mfr's data sheet available in microfilm service

1. TYPE No. CROSS INDEX

IN TYPE NUMBER SEQUENCE

TYPE No.	MFRS	Pg&Line
1N2979 (cont.)	CRI	
	DII	
	DIT	
	ESP	
	ETC	
	GSE	
	HTN	
	IDC	
	MSC	
	NJS	
	SAR	
	SCE	
	SCN	
	SIEG	
	SLD	
	SPE	
	SSI	
	SST	
	WAB	
1N2979A	Δ♦MOTA	384 - 20
	CEN	
	DII	
	ESP	
	ETC	
	GSE	
	HTN	
	IDC	
	MSC	
	NJS	
	SAR	
	SCE	
	SCN	
	SSI	
	SST	
1N2979B	Δ♦MOTA	384 - 4
	CEN	
	DII	
	ESP	
	ETC	
	♦GSE	
	HTN	
	IDC	
	♦MSC	
	SAR	
	SCE	
	SCN	
	♦SIEG	
	SPE	
	SSI	
	SST	
	THEF	
	WAB	
1N2980	CEN	384 -129
	CRI	
	DII	
	ESP	
	ETC	
	GSE	
	HTN	
	IDC	
	MSC	
	NJS	
	SAR	
	SCE	
	SCN	
	SIEG	
	SLD	
	SPE	
	SSI	
	SST	
1N2980A	Δ♦MOTA	384 -117
	CEN	
	DII	
	ESP	
	ETC	
	GSE	
	HTN	
	IDC	
	MSC	
	NJS	
	SAR	
	SCE	
	SCN	
	SPE	
	SSI	
	SST	
1N2980B	Δ♦MOTA	384 -103
	CEN	
	DII	
	ESP	
	ETC	
	♦GSE	
	HTN	
	IDC	
	♦MSC	
	SAR	
	SCE	
	SCN	
	♦SIEG	
	SPE	
	SSI	
	SST	
	THEF	
	UPI	
1N2981	CEN	384 -191
	CRI	
	DII	
	ESP	
	ETC	
	GSE	
	HTN	
	IDC	
	MSC	
	NJS	
	SAR	
	SCE	
	SCN	
	SIEG	
	SSI	
	SST	
1N2981A	Δ♦MOTA	384 -186
	CEN	
	DII	
	ESP	
	ETC	
	GSE	
	HTN	
	IDC	
	MSC	
	NJS	
	SAR	
	SCE	
	SCN	
	SSI	
	SST	
1N2981B	Δ♦MOTA	384 -182
	CEN	
	DII	
	ESP	
	ETC	
	♦GSE	
	HTN	
	IDC	
	♦MSC	
	SAR	
	SCE	
	SCN	
	♦SIEG	
	SSI	
	SST	
1N2982	CEN	385 - 95
	CRI	
	DII	
	ESP	
	ETC	
	GSE	
	HTN	
	IDC	
	MSC	
	NJS	
	SAR	
	SCE	
	SCN	
	SIEG	
	SLD	
	SPE	
	SSI	
	SST	
	UPI	
	WAB	
1N2982A	Δ♦MOTA	385 - 82
	CEN	
	DII	
	ESP	
	ETC	
	GSE	
	HTN	
	IDC	
	MSC	
	NJS	
	SAR	
	SCE	
	SCN	
	SPE	
	SSI	
	SST	
	WAB	
1N2982B	Δ♦MOTA	385 - 67
	CEN	
	DII	
	ESP	
	ETC	
	♦GSE	
	HTN	
	IDC	
	♦MSC	
	SAR	
	SCE	
	SCN	
	SIEG	
	SPE	
	SSI	
	SST	
	THEF	
	WAB	
1N2983	CEN	385 -157
	CRI	
	DII	
	ESP	
	ETC	
	GSE	
	HTN	
	IDC	
	MSC	
	NJS	
	SAR	
	SCE	
	SCN	
	SIEG	
	SSI	
	SST	
1N2983A	Δ♦MOTA	385 -153
	CEN	
	DII	
	ESP	
	ETC	
	GSE	
	HTN	
	IDC	
	MSC	
	NJS	
	SAR	
	SCE	
	SCN	
	SSI	
	SST	
1N2983B	Δ♦MOTA	385 -149
	CEN	
	DII	
	ESP	
	ETC	
	♦GSE	
	HTN	
	IDC	
	♦MSC	
	SAR	
	SCE	
	SCN	
	♦SIEG	
	SSI	
	SST	
1N2984	CEN	386 - 42
	CRI	
	DII	
	ESP	
	ETC	
	GSE	
	HTN	
	IDC	
	MSC	
	NJS	
	SAR	
	SCE	
	SCN	
	SIEG	
	SLD	
	SST	
1N2984A	Δ♦MOTA	386 - 30
	CEN	
	DII	
	ESP	
	ETC	
	GSE	
	HTN	
	IDC	
	MSC	
	NJS	
	SAR	
	SCE	
	SCN	
	SPE	
	SST	
1N2984B	Δ♦MOTA	386 - 16
	CEN	
	DII	
	ESP	
	ETC	
	♦GSE	
	HTN	
	IDC	
	♦MSC	
	SAR	
	SCE	
	SCN	
	♦SIEG	
	SPE	
	SST	
	THEF	
	TIC	
1N2985	CEN	386 -149
	CRI	
	DII	
	ESP	
	ETC	
	GSE	
	HTN	
	IDC	
	MSC	
	NJS	
	SAR	
	SCE	
	SCN	
	SIEG	
	SLD	
	SSI	
	SST	
1N2985A	Δ♦MOTA	386 -137
	CEN	
	DII	
	ESP	
	ETC	
	GSE	
	HTN	
	IDC	
	MSC	
	NJS	
	SAR	
	SCE	
	SCN	
	SPE	
	SSI	
	SST	
	WAB	
1N2985B	Δ♦MOTA	386 -122
	CEN	
	DII	
	ESP	
	ETC	
	♦GSE	
	HTN	
	IDC	
	♦MSC	
	SAR	
	SCE	
	SCN	
	♦SIEG	
	SPE	
	SSI	
	SST	
	THEF	
	UPI	
1N2986	CEN	387 - 64
	CRI	
	DII	
	ESP	
	ETC	
	GSE	
	HTN	
	IDC	
	MSC	
	NJS	
	SAR	
	SCE	
	SCN	
	SIEG	
	SLD	
	SPE	
	SSI	
	SST	
	WAB	
1N2986A	Δ♦MOTA	387 - 52
	CEN	
	DII	
	ESP	
	ETC	
	GSE	
	HTN	
	IDC	
	MSC	
	NJS	
	SAR	
	SCE	
	SCN	
	SSI	
	SST	
	WAB	
1N2986B	Δ♦MOTA	387 - 38
	CEN	
	DII	
	ESP	
	ETC	
	♦GSE	
	HTN	
	IDC	
	♦MSC	
	SAR	
	SCE	
	SCN	
	♦SIEG	
	SPE	
	SSI	
	SST	
	THEF	
	WAB	
1N2987	CEN	387 -119
	CRI	
	DII	
	ESP	
	ETC	
	GSE	
	HTN	
	IDC	
	MSC	
cont.next col.		
1N2987 (cont.)	NJS	
	SAR	
	SCE	
	SCN	
	SIEG	
	SPE	
	SSI	
	SST	
	SSY	
1N2987A	Δ♦MOTA	387 -116
	CEN	
	DII	
	ESP	
	ETC	
	GSE	
	HTN	
	IDC	
	MSC	
	NJS	
	SAR	
	SCE	
	SCN	
	SSI	
	SST	
1N2987B	Δ♦MOTA	387 -114
	CEN	
	DII	
	ESP	
	ETC	
	♦GSE	
	HTN	
	IDC	
	♦MSC	
	SAR	
	SCE	
	SCN	
	♦SIEG	
	SPE	
	SSI	
	SST	
1N2988	CEN	388 - 6
	CRI	
	DII	
	DIT	
	ESP	
	ETC	
	GSE	
	HTN	
	IDC	
	MSC	
	NJS	
	SAR	
	SCE	
	SCN	
	SIEG	
	SLD	
	SPE	
	SSI	
	SST	
1N2988A	Δ♦MOTA	387 -196
	CEN	
	DII	
	ESP	
	ETC	
	GSE	
	HTN	
	IDC	
	MSC	
	NJS	
	SAR	
	SCE	
	SCN	
	SSI	
	SST	
1N2988B	Δ♦MOTA	387 -180
	CEN	
	DII	
	ESP	
	ETC	
	♦GSE	
	HTN	
	IDC	
	♦MSC	
	SAR	
	SCE	
	SCN	
	♦SIEG	
	SSI	
	SST	
	THEF	
	UPI	
1N2989	CEN	388 -122
	DII	
	ESP	
	ETC	
	GSE	
	HTN	
	IDC	
	MSC	
	NJS	
	SAR	
	SCE	
	SCN	
	SIEG	
	SLD	
	SPE	
	SSI	
	SST	
	WAB	
1N2989A	Δ♦MOTA	388 -110
	CEN	
	DII	
	ESP	
	ETC	
	GSE	
	HTN	
	IDC	
	MSC	
	NJS	
	SAR	
	SCE	
	SCN	
	SPE	
	SSI	
	SST	
	UPI	
	WAB	
1N2989B	Δ♦MOTA	388 - 98
	CEN	
	DII	
	ESP	
	ETC	
	♦GSE	
	HTN	
	IDC	
	♦MSC	
	SAR	
	SCE	
	SCN	
	♦SIEG	
	SSI	
	SST	
	THEF	
	TIC	
	WAB	
1N2990	CEN	389 - 31
	DII	
	ESP	
	ETC	
	GSE	
	HTN	
	IDC	
	MSC	
	NJS	
	SAR	
	SCE	
	SCN	
	SIEG	
	SLD	
	SSI	
	SST	
1N2990A	Δ♦MOTA	389 - 19
	CEN	
	DII	
	ESP	
	ETC	
	GSE	
	HTN	
	IDC	
	MSC	
	NJS	
	SAR	
	SCE	
	SCN	
	SPE	
	SSI	
	SST	
1N2990B	Δ♦MOTA	389 - 4
	CEN	
	DII	
	ESP	
	ETC	
	♦GSE	
	HTN	
	IDC	
	♦MSC	
	SAR	
	SCE	
	SCN	
	♦SIEG	
	SPE	
	SSI	
	SST	
	THEF	
1N2991	CEN	389 -140
	CRI	
	DII	
	ESP	
	ETC	
	GSE	
	HTN	
	IDC	
	MSC	
	NJS	
cont.next col.		
1N2991 (cont.)	SCE	
	SCN	
	SIEG	
	SLD	
	SPE	
	SSI	
	SST	
	WAB	
1N2991A	Δ♦MOTA	389 -128
	CEN	
	DII	
	ESP	
	ETC	
	GSE	
	HTN	
	IDC	
	MSC	
	NJS	
	SAR	
	SCE	
	SCN	
	SPE	
	SSI	
	SST	
	WAB	
1N2991B	Δ♦MOTA	389 -115
	CEN	
	DII	
	ESP	
	ETC	
	♦GSE	
	HTN	
	IDC	
	♦MSC	
	SAR	
	SCE	
	SCN	
	♦SIEG	
	SPE	
	SSI	
	SST	
	THEF	
	WAB	
1N2992	CEN	390 - 32
	CRI	
	DII	
	ESP	
	ETC	
	GSE	
	HTN	
	IDC	
	MSC	
	NJS	
	SAR	
	SCE	
	SCN	
	SIEG	
	SLD	
	SPE	
	SSI	
	SST	
1N2992A	Δ♦MOTA	390 - 21
	CEN	
	DII	
	ESP	
	ETC	
	GSE	
	HTN	
	IDC	
	MSC	
	NJS	
	SAR	
	SCE	
	SCN	
	SSI	
	SST	
1N2992B	Δ♦MOTA	390 - 8
	CEN	
	DII	
	ESP	
	ETC	
	♦GSE	
	HTN	
	IDC	
	♦MSC	
	SAR	
	SCE	
	SCN	
	♦SIEG	
	SPE	
	SSI	
	SST	
1N2993	CEN	390 -139
	CRI	
	DII	
	ESP	
	ETC	
	GSE	
	HTN	
	IDC	
	MSC	
	NJS	
	SAR	
	SCE	
	SCN	
	SIEG	
	SLD	
	SSI	
	SST	
1N2993A	Δ♦MOTA	390 -128
	CEN	
	DII	
	ESP	
	ETC	
	GSE	
	HTN	
	IDC	
	MSC	
	NJS	
	SAR	
	SCE	
	SCN	
	SPE	
	SSI	
	SST	
1N2993B	Δ♦MOTA	390 -116
	CEN	
	DII	
	ESP	
	ETC	
	♦GSE	
	HTN	
	IDC	
	♦MSC	
	SAR	
	SCE	
	SCN	
	♦SIEG	
	SSI	
	SST	
	THEF	
	WAB	
1N2994	CEN	391 - 2
	CRI	
	DII	
	ESP	
	ETC	
	GSE	
	HTN	
	IDC	
	MSC	
	NJS	
	SAR	
	SCE	
	SCN	
	SIEG	
	SPE	
	SSI	
	SST	
1N2994A	Δ♦MOTA	390 -197
	CEN	
	DII	
	ESP	
	ETC	
	GSE	
	HTN	
	IDC	
	MSC	
	NJS	
	SAR	
	SCE	
	SCN	
	SSI	
	SST	
1N2994B	Δ♦MOTA	390 -194
	CEN	
	DII	
	ESP	
	ETC	
	♦GSE	
	HTN	
	IDC	
	♦MSC	
	SAR	
	SCE	
	SCN	
	♦SIEG	
	SSI	
	SST	
1N2995	CEN	391 - 74
	CRI	
	DII	
	ESP	
	ETC	
	GSE	
	HTN	
	IDC	
	MSC	
	NJS	
	SAR	
	SCE	
	SCN	
	SIEG	
	SLD	
	SSI	
	SST	
1N2995A	Δ♦MOTA	391 - 63
	CEN	
	DII	
	ESP	
	ETC	
	GSE	
	HTN	
	IDC	
	MSC	
	NJS	
	SAR	
	SCE	
	SCN	
	SPE	
	SSI	
	SST	
1N2995B	Δ♦MOTA	391 - 50
	CEN	
	DII	
	ESP	
	ETC	
	♦GSE	
	HTN	
	IDC	
	♦MSC	
	SAR	
	SCE	
	SCN	
	♦SIEG	
	SPE	
	SSI	
	SST	
	THEF	
	WAB	
1N2996	CEN	391 -140
	CRI	
	DII	
	ESP	
	ETC	
	GSE	
	HTN	
	IDC	
	MSC	
	NJS	
	SAR	
	SCE	
	SCN	
	SIEG	
	SPE	
	SSI	
	SST	
1N2996A	Δ♦MOTA	391 -134
	CEN	
	DII	
	ESP	
	ETC	
	GSE	
	HTN	
	IDC	
	MSC	
	NJS	
	SAR	
	SCE	
	SCN	
	SSI	
	SST	
1N2996B	Δ♦MOTA	391 -130
	CEN	
	DII	
	ESP	
	ETC	
	♦GSE	
	HTN	
	IDC	
	♦MSC	
	SAR	
	SCE	
	SCN	
	♦SIEG	
	SSI	
	SST	
	UPI	
1N2997	CEN	392 - 5
	CRI	
	DII	
	DIT	
	ESP	
	ETC	
	GSE	
	HTN	
	IDC	
	MSC	
	NJS	
	SAR	
	SCE	
	SCN	
	SIEG	
	SLD	
	SSI	
	SST	
	WAB	
1N2997A	Δ♦MOTA	391 -198
	CEN	
	DII	
	ESP	
	ETC	
	GSE	
	HTN	
	IDC	
	MSC	
	NJS	
	SAR	
	SCE	
	SCN	
	SSI	
	SST	
	WAB	
1N2997B	Δ♦MOTA	391 -186
	CEN	
	DII	
	ESP	
	ETC	
	♦GSE	
	HTN	
	IDC	
	♦MSC	
	SAR	
	SCE	
	SCN	
	♦SIEG	
	SPE	
	SSI	
	SST	
	THEF	
	WAB	
1N2998	CEN	392 - 50
	CRI	
	DII	
	DIT	
	ESP	
	ETC	
	GSE	
	HTN	
	IDC	
	MSC	
	NJS	
	SAR	
	SCE	
	SCN	
	SIEG	
	SSI	
	SST	
1N2998A	Δ♦MOTA	392 - 46
	CEN	
	DII	
	ESP	
	ETC	
	GSE	
	HTN	
	IDC	
	MSC	
	NJS	
	SAR	
	SCE	
	SCN	
	SSI	
	SST	
1N2998B	Δ♦MOTA	392 - 43
	CEN	
	DII	
	ESP	
	ETC	
	♦GSE	
	HTN	
	IDC	
	♦MSC	
	SAR	
	SCE	
	SCN	
	♦SIEG	
	SSI	
	SST	
1N2999	CEN	392 -132
	CRI	
	DII	
	DIT	
	ESP	
	ETC	
	GSE	
	HTN	
	IDC	
	MSC	
	NJS	
	SAR	
	SCE	
	SCN	
	SIEG	
	SLD	
	SSI	
	SST	
	UPI	
1N2999A	Δ♦MOTA	392 -120
	CEN	
	DII	
	ESP	
	ETC	
	GSE	
	HTN	
cont.next page		

Δ-Registered with JEDEC by this manufacturer

♦-Mfr's data sheet available in microfilm service

1. TYPE No. CROSS INDEX

IN TYPE NUMBER SEQUENCE

TYPE No.	MFRS	Pg&Line
1N2999A		
(cont.)	IDC	
	MSC	
	NJS	
	SAR	
	SCE	
	SCN	
	SPE	
	SSI	
	SST	
1N2999B	Δ♦MOTA	392 -106
	CEN	
	DII	
	ESP	
	ETC	
	♦GSE	
	HTN	
	IDC	
	♦MSC	
	SAR	
	SCE	
	SCN	
	♦SIEG	
	SSI	
	SST	
	THEF	
	UPI	
	WAB	
1N3000	CEN	393 - 44
	DII	
	DIT	
	ESP	
	ETC	
	GSE	
	HTN	
	IDC	
	MSC	
	NJS	
	SAR	
	SCE	
	SCN	
	SIEG	
	SLD	
	SPE	
	SSI	
	SST	
	WAB	
1N3000A	Δ♦MOTA	393 - 33
	CEN	
	DII	
	ESP	
	ETC	
	GSE	
	HTN	
	IDC	
	MSC	
	NJS	
	SAR	
	SCE	
	SCN	
	SPE	
	SSI	
	SST	
	WAB	
1N3000B	Δ♦MOTA	393 - 21
	CEN	
	DII	
	ESP	
	ETC	
	♦GSE	
	HTN	
	IDC	
	♦MSC	
	SAR	
	SCE	
	SCN	
	♦SIEG	
	SPE	
	SSI	
	SST	
	THEF	
	WAB	
1N3001	CEN	393 -138
	DII	
	DIT	
	ESP	
	ETC	
	GSE	
	HTN	
	IDC	
	MSC	
	NJS	
	SAR	
	SCE	
	SCN	
	SIEG	
	SLD	
	SSI	
	SST	
1N3001A	Δ♦MOTA	393 -127
	CEN	
	DII	
	ESP	
	ETC	
	GSE	
	HTN	
	IDC	
	MSC	
	NJS	
	SAR	
	SCE	
	SCN	
	SPE	
	SSI	
	SST	
1N3001B	Δ♦MOTA	393 -114
	CEN	
	DII	
	ESP	
	ETC	
	♦GSE	
	HTN	
	IDC	
	♦MSC	
	SAR	
	SCE	
	SCN	
	♦SIEG	
	SPE	
	SSI	
	SST	
	THEF	
	WAB	
1N3002	CEN	394 - 59
	DII	
	DIT	
	ESP	
	ETC	
	GSE	
	HTN	
	IDC	
	MSC	
	NJS	
	SAR	
	SCE	
	SCN	
	SIEG	
	SLD	
	SSI	
	SST	
1N3002A	Δ♦MOTA	394 - 47
	CEN	
	DII	
	ESP	
	ETC	
	GSE	
	HTN	
	IDC	
	MSC	
	NJS	
	SAR	
	SCE	
	SCN	
	SSI	
	SST	
1N3002B	Δ♦MOTA	394 - 34
	CEN	
	DII	
	ESP	
	ETC	
	♦GSE	
	HTN	
	IDC	
	♦MSC	
	SAR	
	SCE	
	SCN	
	♦SIEG	
	SPE	
	SSI	
	SST	
	THEF	
	WAB	
1N3003	CEN	394 -165
	DII	
	DIT	
	ESP	
	ETC	
	GSE	
	HTN	
	IDC	
	MSC	
	NJS	
	SAR	
	SCE	
	SCN	
	SIEG	
	SLD	
	SSI	
	SST	
1N3003A	Δ♦MOTA	394 -154
	CEN	
	DII	
	ESP	
	ETC	
	GSE	
	HTN	
cont.next col.		

TYPE No.	MFRS	Pg&Line
1N3003A		
(cont.)	IDC	
	MSC	
	NJS	
	SAR	
	SCE	
	SCN	
	SSI	
	SST	
1N3003B	Δ♦MOTA	394 -141
	CEN	
	DII	
	ESP	
	ETC	
	♦GSE	
	HTN	
	IDC	
	♦MSC	
	SAR	
	SCE	
	SCN	
	♦SIEG	
	SPE	
	SSI	
	SST	
	THEF	
	WAB	
1N3004	CEN	395 - 73
	DII	
	DIT	
	ESP	
	ETC	
	GSE	
	HTN	
	IDC	
	INRJ	
	MSC	
	NJS	
	SAR	
	SCE	
	SCN	
	SIEG	
	SLD	
	SSI	
	SST	
1N3004A	Δ♦MOTA	395 - 62
	CEN	
	DII	
	ESP	
	ETC	
	GSE	
	HTN	
	IDC	
	INRJ	
	MSC	
	NJS	
	SAR	
	SCE	
	SCN	
	SSI	
	SST	
1N3004B	Δ♦MOTA	395 - 50
	CEN	
	DII	
	ESP	
	ETC	
	♦GSE	
	HTN	
	IDC	
	INRJ	
	♦MSC	
	SAR	
	SCE	
	SCN	
	♦SIEG	
	SSI	
	SST	
	THEF	
	WAB	
1N3005	CEN	395 -182
	DII	
	DIT	
	ESP	
	ETC	
	GSE	
	HTN	
	IDC	
	MSC	
	NJS	
	SAR	
	SCE	
	SCN	
	SIEG	
	SLD	
	SPE	
	SSI	
	SST	
	WAB	
1N3005A	Δ♦MOTA	395 -171
	CEN	
	DII	
	ESP	
	ETC	
	GSE	
	HTN	
	IDC	
	MSC	
	NJS	
	SAR	
	SCE	
	SCN	
	SSI	
	SST	
	WAB	
1N3005B	Δ♦MOTA	395 -157
	CEN	
	DII	
	ESP	
	ETC	
	♦GSE	
	HTN	
	IDC	
	♦MSC	
	SAR	
	SCE	
	SCN	
	♦SIEG	
	SSI	
	SST	
	THEF	
	WAB	
1N3006	CEN	396 - 31
	DII	
	DIT	
	ESP	
	ETC	
	GSE	
	HTN	
	IDC	
	MSC	
	NJS	
	SAR	
	SCE	
	SCN	
	SIEG	
	SSI	
1N3006A	Δ♦MOTA	396 - 27
	CEN	
	DII	
	ESP	
	ETC	
	GSE	
	HTN	
	IDC	
	MSC	
	NJS	
	SAR	
	SCE	
	SCN	
	SSI	
	WAB	
1N3006B	Δ♦MOTA	396 - 24
	CEN	
	DII	
	ESP	
	ETC	
	GSE	
	HTN	
	IDC	
	♦MSC	
	SAR	
	SCE	
	SCN	
	♦SIEG	
	SSI	
1N3007	CEN	396 -100
	DII	
	DIT	
	ESP	
	ETC	
	GSE	
	HTN	
	IDC	
	MSC	
	NJS	
	SAR	
	SCE	
	SCN	
	SIEG	
	SLD	
	SSI	
	SST	
	UPI	
1N3007A	Δ♦MOTA	396 - 89
	CEN	
	DII	
	ESP	
	ETC	
	GSE	
	HTN	
	IDC	
	MSC	
	NJS	
	SAR	
cont.next col.		

TYPE No.	MFRS	Pg&Line
1N3007A		
(cont.)	SCE	
	SCN	
	SPE	
	SSI	
1N3007B	Δ♦MOTA	396 - 77
	CEN	
	DII	
	ESP	
	ETC	
	♦GSE	
	HTN	
	IDC	
	♦MSC	
	SAR	
	SCE	
	SCN	
	♦SIEG	
	SPE	
	SSI	
	THEF	
	TIC	
1N3008	CEN	396 -187
	DII	
	DIT	
	ESP	
	ETC	
	GSE	
	HTN	
	IDC	
	MSC	
	NJS	
	SAR	
	SCE	
	SCN	
	SIEG	
	SLD	
	SPE	
	SSI	
	SST	
1N3008A	Δ♦MOTA	396 -176
	CEN	
	DII	
	ESP	
	ETC	
	GSE	
	HTN	
	IDC	
	MSC	
	NJS	
	SAR	
	SCE	
	SCN	
	SSI	
1N3008B	Δ♦MOTA	396 -164
	CEN	
	DII	
	ESP	
	ETC	
	♦GSE	
	HTN	
	IDC	
	♦MSC	
	SAR	
	SCE	
	SCN	
	♦SIEG	
	SPE	
	SSI	
1N3009	CEN	397 - 76
	DII	
	DIT	
	ESP	
	ETC	
	GSE	
	HTN	
	IDC	
	MSC	
	NJS	
	SAR	
	SCE	
	SCN	
	SIEG	
	SLD	
	SPE	
	SSI	
	SST	
	UPI	
1N3009A	Δ♦MOTA	397 - 65
	CEN	
	DII	
	ESP	
	ETC	
	GSE	
	HTN	
	IDC	
	MSC	
	NJS	
	SAR	
	SCE	
	SCN	
	SPE	
	SSI	
	UPI	
1N3009B	Δ♦MOTA	397 - 53
	CEN	
	DII	
	ESP	
	ETC	
	♦GSE	
	HTN	
	IDC	
	♦MSC	
	SAR	
	SCE	
	SCN	
	♦SIEG	
	SPE	
	SSI	
	THEF	
1N3010	CEN	397 -141
	DII	
	DIT	
	ESP	
	ETC	
	GSE	
	HTN	
	IDC	
	MSC	
	NJS	
	SAR	
	SCE	
	SCN	
	SIEG	
	SPE	
	SSI	
1N3010A	Δ♦MOTA	397 -135
	CEN	
	DII	
	ESP	
	ETC	
	GSE	
	HTN	
	IDC	
	MSC	
	NJS	
	SAR	
	SCE	
	SCN	
	SSI	
1N3010B	Δ♦MOTA	397 -130
	CEN	
	DII	
	ESP	
	ETC	
	♦GSE	
	HTN	
	IDC	
	♦MSC	
	SAR	
	SCE	
	SCN	
	♦SIEG	
	SPE	
	SSI	
1N3011	CEN	398 - 19
	DII	
	DIT	
	ESP	
	ETC	
	GSE	
	HTN	
	IDC	
	MSC	
	NJS	
	SAR	
	SCE	
	SCN	
	SIEG	
	SLD	
	SPE	
	SSI	
	SST	
	WAB	
1N3011A	Δ♦MOTA	398 - 8
	CEN	
	DII	
	ESP	
	ETC	
	GSE	
	HTN	
	IDC	
	MSC	
	NJS	
	SAR	
	SCE	
	SCN	
	SSI	
1N3011B	Δ♦MOTA	397 -191
	CEN	
	DII	
cont.next col.		

TYPE No.	MFRS	Pg&Line
1N3011B		
(cont.)	ESP	
	ETC	♦GSE
	HTN	IDC
	♦MSC	SAR
	SCE	SCN
	♦SIEG	SPE
	SSI	THEF
	UPI	WAB
1N3012	CEN	398 - 96
	DII	DIT
	ESP	ETC
	GSE	HTN
	IDC	MSC
	NJS	SAR
	SCE	SCN
	SIEG	SLD
	SSI	SST
1N3012A	Δ♦MOTA	398 - 87
	CEN	DII
	ESP	ETC
	GSE	HTN
	IDC	MSC
	NJS	SAR
	SCE	SCN
		SSI
1N3012B	Δ♦MOTA	398 - 78
	CEN	DII
	ESP	ETC
	♦GSE	HTN
	IDC	♦MSC
	SAR	SCE
	SCN	♦SIEG
	SSI	THEF
		TIC
1N3013	CEN	398 -152
	DII	DIT
	ESP	ETC
	HTN	IDC
	MSC	NJS
	SAR	SCE
	SCN	SIEG
		SSI
1N3013A	CEN	398 -150
	DII	ESP
	ETC	HTN
	IDC	♦MOTA
	MSC	NJS
	SAR	SCE
	SCN	SSI
		WAB
1N3013B	CEN	398 -148
	DII	ESP
	ETC	HTN
	IDC	♦MOTA
	♦MSC	SAR
	SCE	SCN
	SIEG	SSI
1N3014	CEN	399 - 22
	DII	DIT
	ESP	ETC
	GSE	HTN
	IDC	MSC
	NJS	SAR
	SCE	SCN
	SIEG	SLD
	SSI	SST
1N3014A	CEN	399 - 12
	DII	ESP
	ETC	GSE
	HTN	IDC
	♦MOTA	MSC
	NJS	SAR
	SCE	SCN
		SSI
1N3014B	CEN	399 - 3
	DII	ESP
	ETC	♦GSE
	HTN	IDC
	♦MOTA	♦MSC
	SAR	SCE
	SCN	♦SIEG
	SPE	SSI
		THEF
1N3015	CEN	399 -118
	DII	DIT
	ESP	ETC
	GSE	HTN
	IDC	MSC
	NJS	SAR
	SCE	SCN
	SIEG	SLD
	SPE	SSI
	SST	WAB
1N3015A	CEN	399 -109
	DII	ESP
	ETC	GSE
	HTN	IDC
	♦MOTA	MSC
	NJS	SAR
	SCE	SCN
	SPE	SSI
		WAB
1N3015B	CEN	399 -100
	DII	ESP
	ETC	♦GSE
	HTN	IDC
	♦MOTA	♦MSC
	SAR	SCE
	SCN	♦SIEG
	SPE	SSI
	THEF	WAB
1N3016	♦APD	178 -141
cont.next col.		

TYPE No.	MFRS	Pg&Line
1N3016		
(cont.)	CEN	
	DII	DIT
	ESP	ETC
	♦GSE	HTN
	IDC	INRJ
	SAR	SCN
	SIEG	SLD
	SPE	SSI
	SST	UPI
1N3016A	CEN	178 -128
	DII	DIT
	ESP	ETC
	GSE	HTN
	IDC	INRJ
	♦MOTA	SAR
	SCN	SPE
		SSI
1N3016B	CEN	178 - 95
	DII	DIT
	ESP	ETC
	GSE	HTN
	IDC	INRJ
	♦MOTA	♦MSC
	SAR	SCN
	♦SIEG	SPE
	SSI	TIC
	UPI	WAB
1N3017	♦APD	180 -134
	CEN	DII
	DIT	ESP
	ETC	♦GSE
	HTN	IDC
	INRJ	SAR
	SCE	SCN
	SIEG	SLD
	SPE	SSI
	SST	WAB
1N3017A	CEN	180 -120
	DII	DIT
	ESP	ETC
	GSE	HTN
	IDC	INRJ
	♦MOTA	SAR
	SCE	SCN
	SSI	WAB
1N3017B	CEN	180 - 88
	DII	DIT
	ESP	ETC
	GSE	HTN
	IDC	INRJ
	♦MOTA	♦MSC
	SAR	SCE
	SCN	♦SIEG
	SPE	SSI
		WAB
1N3018	♦APD	182 -122
	CEN	DII
	DIT	ESP
	ETC	♦GSE
	HTN	IDC
	INRJ	MSC
	SAR	SCE
	SCN	SIEG
	SLD	SPE
	SSI	SST
		WAB
1N3018A	CEN	182 -109
	DII	DIT
	ESP	ETC
	GSE	HTN
	IDC	INRJ
	♦MOTA	SAR
	SCE	SCN
	SPE	SSI
		WAB
1N3018B	CEN	182 - 74
	DII	DIT
	ESP	ETC
	GSE	HTN
	IDC	INRJ
	♦MOTA	♦MSC
	SAR	SCE
	SCN	♦SIEG
	SPE	SSI
	THEF	UPI
		WAB
1N3019	♦APD	185 -150
	CEN	DII
	ESP	ETC
	♦GSE	HTN
	IDC	INRJ
	SAR	SCE
	SCN	SIEG
	SLD	SPE
	SSI	SST
		WAB
1N3019A	CEN	185 -138
	DII	ESP
	ETC	GSE
	HTN	IDC
	INRJ	♦MOTA
	SAR	SCE
	SCN	SPE
	SSI	WAB
1N3019B	CEN	185 -105
	DII	ESP
	ETC	GSE
	HTN	IDC
	INRJ	♦MOTA
	♦MSC	SAR
	SCE	SCN
	♦SIEG	SSI
cont.next page		

Δ-Registered with JEDEC by this manufacturer

♦-Mfr's data sheet available in microfilm service

1. TYPE No. CROSS INDEX

IN TYPE NUMBER SEQUENCE

TYPE No.	MFRS	Pg&Line
1N3019B		
(cont.)	THEF	
UPI	WAB	
1N3020	♦APD	188 - 9
CEN	DII	
ESP	ETC	
♦GSE	HTN	
IDC	INRJ	
SAR	SCE	
SCN	SIEG	
SLD	SPE	
SSI	SST	
	WAB	
1N3020A	CEN	187 -203
DII	ESP	
ETC	GSE	
HTN	IDC	
INRJ	♦MOTA	
SAR	SCE	
SCN	SPE	
SSI	WAB	
1N3020B	CEN	187 -163
DII	ESP	
ETC	GSE	
HTN	IDC	
INRJ	♦MOTA	
SAR	SCE	
SCN	♦SIEG	
SPE	SSI	
UPI	WAB	
1N3021	♦APD	189 -123
CEN	DII	
ESP	ETC	
♦GSE	HTN	
IDC	INRJ	
MSC	SAR	
SCE	SCN	
SIEG	SLD	
SSI	SST	
	WAB	
1N3021A	CEN	189 -110
DII	ESP	
ETC	GSE	
HTN	IDC	
INRJ	♦MOTA	
SAR	SCE	
SCN	SSI	
SSY	WAB	
1N3021B	CEN	189 - 76
DII	ESP	
ETC	GSE	
HTN	IDC	
INRJ	♦MOTA	
SAR	SCE	
SCN	♦SIEG	
SPE	SSI	
THEF	WAB	
1N3022	♦APD	191 - 98
CEN	DII	
ESP	ETC	
♦GSE	HTN	
IDC	INRJ	
SAR	SCE	
SCN	SIEG	
SLD	SPE	
SSI	SST	
	WAB	
1N3022A	CEN	191 - 82
DII	ESP	
ETC	GSE	
HTN	IDC	
INRJ	♦MOTA	
MSC	SAR	
SCE	SCN	
SPE	SSI	
UPI	WAB	
1N3022B	CEN	191 - 43
DII	ESP	
ETC	GSE	
HTN	IDC	
INRJ	♦MOTA	
SAR	SCE	
SCN	♦SIEG	
SPE	SSI	
	WAB	
1N3023	♦APD	193 - 42
CEN	DII	
ESP	ETC	
♦GSE	HTN	
IDC	INRJ	
SAR	SCE	
SCN	SIEG	
SLD	SSI	
SST	WAB	
1N3023A	CEN	193 - 28
DII	ESP	
ETC	GSE	
HTN	IDC	
INRJ	♦MOTA	
SAR	SCE	
SCN	SPE	
SSI	WAB	
1N3023B	CEN	192 -209
DII	ESP	
ETC	GSE	
HTN	IDC	
INRJ	♦MOTA	
SAR	SCE	
SCN	♦SIEG	
SPE	SSI	
	WAB	
1N3024	♦APD	195 - 97
CEN	DII	
cont.next col.		

TYPE No.	MFRS	Pg&Line
1N3024		
(cont.)	ESP	
ETC	♦GSE	
HTN	IDC	
INRJ	SAR	
SCE	SCN	
SIEG	SLD	
SPE	SSI	
SST	WAB	
1N3024A	CEN	195 - 81
DII	ESP	
ETC	GSE	
HTN	IDC	
INRJ	♦MOTA	
MSC	SAR	
SCE	SCN	
SPE	SSI	
SSY	WAB	
1N3024B	CEN	195 - 43
DII	ESP	
ETC	GSE	
HTN	IDC	
INRJ	♦MOTA	
♦MSC	SAR	
SCE	SCN	
♦SIEG	SPE	
SSI	TIC	
UPI	WAB	
1N3025	♦APD	196 -186
CEN	DII	
ESP	ETC	
♦GSE	HTN	
IDC	INRJ	
SAR	SCE	
SCN	SIEG	
SLD	SSI	
SST	WAB	
1N3025A	CEN	196 -171
DII	ESP	
ETC	GSE	
HTN	IDC	
INRJ	♦MOTA	
MSC	SAR	
SCE	SCN	
SSI	SSY	
	WAB	
1N3025B	CEN	196 -138
DII	ESP	
ETC	GSE	
HTN	IDC	
INRJ	♦MOTA	
SAR	SCE	
SCN	♦SIEG	
SPE	SSI	
UPI	WAB	
1N3026	♦APD	198 -205
CEN	DII	
ESP	ETC	
♦GSE	HTN	
IDC	INRJ	
MSC	SAR	
SCE	SCN	
SIEG	SLD	
SPE	SSI	
SST	SSY	
	WAB	
1N3026A	CEN	198 -189
DII	ESP	
ETC	GSE	
HTN	IDC	
INRJ	♦MOTA	
SAR	SCE	
SCN	SPE	
SSI	WAB	
1N3026B	CEN	198 -154
DII	ESP	
ETC	GSE	
HTN	IDC	
INRJ	♦MOTA	
SAR	SCE	
SCN	♦SIEG	
SPE	SSI	
TIC	UPI	
	WAB	
1N3027	♦APD	200 -195
CEN	DII	
ESP	ETC	
♦GSE	HTN	
IDC	INRJ	
SAR	SCE	
SCN	SIEG	
SLD	SPE	
SSI	SST	
	WAB	
1N3027A	CEN	200 -180
DII	ESP	
ETC	GSE	
HTN	IDC	
INRJ	♦MOTA	
MSC	SAR	
SCE	SCN	
SPE	SSI	
	WAB	
1N3027B	CEN	200 -147
DII	ESP	
ETC	GSE	
HTN	IDC	
INRJ	♦MOTA	
SAR	SCE	
SCN	♦SIEG	
SPE	SSI	
	WAB	
1N3028	♦APD	202 - 95
cont.next col.		

TYPE No.	MFRS	Pg&Line
1N3028		
(cont.)	CEN	
DII	ESP	
ETC	♦GSE	
HTN	IDC	
INRJ	MSC	
SAR	SCE	
SCN	SIEG	
SLD	SPE	
SSI	SST	
	WAB	
1N3028A	CEN	202 - 80
DII	ESP	
ETC	♦GSE	
HTN	IDC	
INRJ	♦MOTA	
MSC	SAR	
SCE	SCN	
SPE	SSI	
	WAB	
1N3028B	CEN	202 - 45
DII	ESP	
ETC	♦GSE	
HTN	IDC	
INRJ	♦MOTA	
SAR	SCE	
SCN	♦SIEG	
SPE	SSI	
UPI	WAB	
1N3029	♦APD	203 -190
CEN	DII	
ESP	ETC	
♦GSE	HTN	
IDC	INRJ	
SAR	SCE	
SCN	SIEG	
SLD	SPE	
SSI	SST	
	WAB	
1N3029A	CEN	203 -176
DII	ESP	
ETC	♦GSE	
HTN	IDC	
INRJ	♦MOTA	
SAR	SCE	
SCN	SPE	
SSI	WAB	
1N3029B	CEN	203 -143
DII	ESP	
ETC	♦GSE	
HTN	IDC	
INRJ	♦MOTA	
♦MSC	SAR	
SCE	SCN	
♦SIEG	SPE	
SSI	WAB	
1N3030	♦APD	205 -133
CEN	DII	
ESP	ETC	
♦GSE	HTN	
IDC	INRJ	
SAR	SCE	
SCN	SIEG	
SLD	SPE	
SSI	SST	
	WAB	
1N3030A	Δ♦MOTA	205 -118
♦APD	CEN	
DII	ESP	
ETC	♦GSE	
HTN	IDC	
INRJ	SAR	
SCE	SCN	
SLD	SSI	
SST	WAB	
1N3030B	Δ♦MOTA	205 - 82
♦APD	CEN	
DII	ESP	
ETC	♦GSE	
HTN	IDC	
INRJ	SAR	
SCE	SCN	
♦SIEG	SLD	
SPE	SSI	
SST	THEF	
	WAB	
1N3031	♦APD	207 - 57
CEN	DII	
ESP	ETC	
♦GSE	HTN	
IDC	INRJ	
MSC	SAR	
SCE	SCN	
SIEG	SLD	
SSI	SST	
	WAB	
1N3031A	Δ♦MOTA	207 - 42
♦APD	CEN	
DII	ESP	
ETC	♦GSE	
HTN	IDC	
INRJ	SAR	
SCE	SCN	
SLD	SSI	
SST	WAB	
1N3031B	Δ♦MOTA	207 - 7
♦APD	CEN	
DII	ESP	
ETC	♦GSE	
HTN	IDC	
INRJ	♦MSC	
SAR	SCE	
SCN	♦SIEG	
cont.next col.		

TYPE No.	MFRS	Pg&Line
1N3031B		
(cont.)	SLD	
SPE	SSI	
SST	THEF	
	WAB	
1N3032	♦APD	208 -150
CEN	DII	
ESP	ETC	
♦GSE	HTN	
IDC	INRJ	
SAR	SCE	
SCN	SIEG	
SLD	SPE	
SSI	SST	
	WAB	
1N3032A	Δ♦MOTA	208 -136
♦APD	CEN	
DII	ESP	
ETC	♦GSE	
HTN	IDC	
INRJ	SAR	
SCE	SCN	
SLD	SPE	
SSI	SST	
	WAB	
1N3032B	Δ♦MOTA	208 -100
♦APD	CEN	
DII	ESP	
ETC	♦GSE	
HTN	IDC	
INRJ	SAR	
SCE	SCN	
♦SIEG	SLD	
SPE	SSI	
SST	THEF	
	WAB	
1N3033	♦APD	210 - 2
CEN	DII	
ESP	ETC	
♦GSE	HTN	
IDC	INRJ	
MSC	SAR	
SCE	SCN	
SIEG	SLD	
SPE	SSI	
SST	WAB	
1N3033A	Δ♦MOTA	209 -193
♦APD	CEN	
DII	ESP	
ETC	♦GSE	
HTN	IDC	
INRJ	MSC	
SAR	SCE	
SCN	SLD	
SSI	SST	
	WAB	
1N3033B	Δ♦MOTA	209 -166
♦APD	CEN	
DII	ESP	
ETC	♦GSE	
HTN	IDC	
INRJ	SAR	
SCE	SCN	
♦SIEG	SLD	
SPE	SSI	
SST	THEF	
	WAB	
1N3034	♦APD	211 - 39
CEN	DII	
ESP	ETC	
♦GSE	HTN	
IDC	INRJ	
MSC	SAR	
SCE	SCN	
SIEG	SLD	
SPE	SSI	
SST	WAB	
1N3034A	Δ♦MOTA	211 - 28
♦APD	CEN	
DII	ESP	
ETC	♦GSE	
HTN	IDC	
INRJ	SAR	
SCE	SCN	
SLD	SSI	
SST	WAB	
1N3034B	Δ♦MOTA	211 - 3
♦APD	CEN	
DII	ESP	
ETC	♦GSE	
HTN	IDC	
INRJ	♦MSC	
SAR	SCE	
SCN	♦SIEG	
SLD	SPE	
SSI	SST	
THEF	UPI	
	WAB	
1N3035	♦APD	212 - 48
CEN	DII	
ESP	ETC	
♦GSE	HTN	
IDC	INRJ	
SAR	SCE	
SCN	SIEG	
SLD	SPE	
SSI	SST	
	WAB	
1N3035A	Δ♦MOTA	212 - 37
♦APD	CEN	
DII	ESP	
ETC	♦GSE	
HTN	IDC	
cont.next col.		

TYPE No.	MFRS	Pg&Line
1N3035A		
(cont.)	INRJ	
MSC	SAR	
SCE	SCN	
SLD	SSI	
SST	WAB	
1N3035B	Δ♦MOTA	212 - 15
♦APD	CEN	
DII	ESP	
ETC	♦GSE	
HTN	IDC	
INRJ	SAR	
SCE	SCN	
♦SIEG	SLD	
SPE	SSI	
SST	THEF	
	WAB	
1N3036	♦APD	213 - 64
CEN	DII	
ESP	ETC	
♦GSE	HTN	
IDC	INRJ	
SAR	SCE	
SCN	SIEG	
SLD	SPE	
SSI	SST	
	WAB	
1N3036A	Δ♦MOTA	213 - 53
♦APD	CEN	
DII	ESP	
ETC	♦GSE	
HTN	IDC	
INRJ	SAR	
SCE	SCN	
SLD	SSI	
SST	WAB	
1N3036B	Δ♦MOTA	213 - 32
♦APD	CEN	
DII	ESP	
ETC	♦GSE	
HTN	IDC	
INRJ	♦MSC	
SAR	SCE	
SCN	♦SIEG	
SLD	SPE	
SSI	SST	
THEF	WAB	
1N3037	♦APD	214 - 59
CEN	DII	
ESP	ETC	
♦GSE	HTN	
IDC	INRJ	
SAR	SCE	
SCN	SIEG	
SLD	SPE	
SSI	SST	
	WAB	
1N3037A	Δ♦MOTA	214 - 49
♦APD	CEN	
DII	ESP	
ETC	♦GSE	
HTN	IDC	
INRJ	SAR	
SCE	SCN	
SLD	SSI	
SST	WAB	
1N3037B	Δ♦MOTA	214 - 30
♦APD	CEN	
DII	ESP	
ETC	♦GSE	
HTN	IDC	
INRJ	♦MSC	
SAR	SCE	
SCN	♦SIEG	
SLD	SSI	
SST	THEF	
	WAB	
1N3038	♦APD	215 - 49
CEN	DII	
ESP	ETC	
♦GSE	HTN	
IDC	INRJ	
SAR	SCE	
SCN	SIEG	
SLD	SPE	
SSI	SST	
	WAB	
1N3038A	Δ♦MOTA	215 - 37
♦APD	CEN	
DII	ESP	
ETC	♦GSE	
HTN	IDC	
INRJ	MSC	
SAR	SCE	
SCN	SLD	
SSI	SST	
	WAB	
1N3038B	Δ♦MOTA	215 - 16
♦APD	CEN	
DII	ESP	
ETC	♦GSE	
HTN	IDC	
INRJ	SAR	
SCE	SCN	
♦SIEG	SLD	
SPE	SSI	
SST	SSY	
THEF	WAB	
1N3039	♦APD	216 - 53
CEN	DII	
ESP	ETC	
♦GSE	HTN	
IDC	INRJ	
cont.next page		

Δ-Registered with JEDEC by this manufacturer

♦-Mfr's data sheet available in microfilm service

1. TYPE No. CROSS INDEX

IN TYPE NUMBER SEQUENCE

TYPE No.	MFRS	Pg&Line
1N3039 (cont.)	SAR	
	SCE	
	SCN	
	SIEG	
	SLD	
	SSI	
	SST	
	WAB	
1N3039A	Δ♦MOTA	216 - 42
	♦APD	
	CEN	
	DII	
	ESP	
	ETC	
	♦GSE	
	HTN	
	IDC	
	INRJ	
	MSC	
	SAR	
	SCE	
	SCN	
	SLD	
	SSI	
	SST	
	WAB	
1N3039B	Δ♦MOTA	216 - 22
	♦APD	
	CEN	
	DII	
	ESP	
	ETC	
	♦GSE	
	HTN	
	IDC	
	INRJ	
	♦MSC	
	SAR	
	SCE	
	SCN	
	♦SIEG	
	SLD	
	SPE	
	SSI	
	SST	
	SSY	
	THEF	
	WAB	
1N3040	♦APD	217 - 34
	CEN	
	DII	
	ESP	
	ETC	
	♦GSE	
	HTN	
	IDC	
	INRJ	
	MSC	
	SAR	
	SCE	
	SCN	
	SIEG	
	SLD	
	SPE	
	SSI	
	SST	
	WAB	
1N3040A	Δ♦MOTA	217 - 23
	♦APD	
	CEN	
	DII	
	ESP	
	ETC	
	♦GSE	
	HTN	
	IDC	
	INRJ	
	SAR	
	SCE	
	SCN	
	SLD	
	SPE	
	SSI	
	SST	
	WAB	
1N3040B	Δ♦MOTA	217 - 3
	♦APD	
	CEN	
	DII	
	ESP	
	ETC	
	♦GSE	
	HTN	
	IDC	
	INRJ	
	♦MSC	
	SAR	
	SCE	
	SCN	
	♦SIEG	
	SLD	
	SSI	
	SST	
	THEF	
	WAB	
1N3041	APD	218 - 17
	CEN	
	DII	
	ESP	
	ETC	
	♦GSE	
	HTN	
	IDC	
	INRJ	
	SAR	
	SCE	
	SCN	
	SIEG	
	SPE	
	SSI	
	WAB	
1N3041A	Δ♦MOTA	218 - 5
	CEN	
	DII	
	ESP	
	ETC	
	♦GSE	
	HTN	
	IDC	
	INRJ	
	MSC	
	SAR	
	SCE	
	SCN	
	SPE	
	SSI	
	WAB	
1N3041B	Δ♦MOTA	217 -185
	CEN	
	DII	
	ESP	
	ETC	
	♦GSE	
	HTN	
	IDC	
	SAR	
	SCE	
	SCN	
	♦SIEG	
	SPE	
	SSI	
	THEF	
	UPI	
	WAB	
1N3042	APD	218 -196
	CEN	
	DII	
	ESP	
	ETC	
	♦GSE	
	HTN	
	IDC	
	SAR	
	SCE	
	SCN	
	SIEG	
	SPE	
	SSI	
	WAB	
1N3042A	Δ♦MOTA	218 -185
	CEN	
	DII	
	ESP	
	ETC	
	♦GSE	
	HTN	
	IDC	
	SAR	
	SCE	
	SCN	
	SSI	
	WAB	
1N3042B	Δ♦MOTA	218 -165
	CEN	
	DII	
	ESP	
	ETC	
	♦GSE	
	HTN	
	IDC	
	♦MSC	
	SAR	
	SCE	
	SCN	
	♦SIEG	
	SPE	
	SSI	
	THEF	
	WAB	
1N3043	CEN	219 -175
	DII	
	ESP	
	ETC	
	♦GSE	
cont.next col.		

TYPE No.	MFRS	Pg&Line
1N3043 (cont.)	HTN	
	IDC	
	SAR	
	SCE	
	SCN	
	SIEG	
	SPE	
	SSI	
	WAB	
1N3043A	Δ♦MOTA	219 -164
	CEN	
	DII	
	ESP	
	ETC	
	♦GSE	
	HTN	
	IDC	
	SAR	
	SCE	
	SCN	
	SSI	
	WAB	
1N3043B	Δ♦MOTA	219 -147
	CEN	
	DII	
	ESP	
	ETC	
	♦GSE	
	HTN	
	IDC	
	SAR	
	SCE	
	SCN	
	♦SIEG	
	SPE	
	SSI	
	THEF	
	WAB	
1N3044	CEN	220 -137
	DII	
	ESP	
	ETC	
	♦GSE	
	HTN	
	IDC	
	MSC	
	SAR	
	SCE	
	SCN	
	SIEG	
	SSI	
	WAB	
1N3044A	CEN	220 -125
	DII	
	ESP	
	ETC	
	♦GSE	
	HTN	
	IDC	
	♦MOTA	
	MSC	
	SAR	
	SCE	
	SCN	
	SPE	
	SSI	
	WAB	
1N3044B	CEN	220 -106
	DII	
	ESP	
	ETC	
	♦GSE	
	HTN	
	IDC	
	♦MOTA	
	♦MSC	
	SAR	
	SCE	
	SCN	
	♦SIEG	
	SPE	
	SSI	
	THEF	
	WAB	
1N3045	CEN	221 -100
	DII	
	ESP	
	♦ETC	
	♦GSE	
	HTN	
	IDC	
	MSC	
	SAR	
	SCE	
	SCN	
	SIEG	
	SSI	
	WAB	
1N3045A	Δ♦MOTA	221 - 88
	CEN	
	DII	
	ESP	
	ETC	
	♦GSE	
	HTN	
	IDC	
	MSC	
	SAR	
	SCE	
	SCN	
	SPE	
	SSI	
	WAB	
1N3045B	Δ♦MOTA	221 - 71
	CEN	
	DII	
	ESP	
	ETC	
	♦GSE	
	HTN	
	IDC	
	SAR	
	SCE	
	SCN	
	SIEG	
	SPE	
	SSI	
	THEF	
	WAB	
1N3046	CEN	222 - 52
	DII	
	ESP	
	ETC	
	♦GSE	
	HTN	
	IDC	
	SAR	
	SCE	
	SCN	
	SIEG	
	SPE	
	SSI	
	UPI	
	WAB	
1N3046A	Δ♦MOTA	222 - 38
	CEN	
	DII	
	ESP	
	ETC	
	♦GSE	
	HTN	
	IDC	
	SAR	
	SCE	
	SCN	
	SSI	
	WAB	
1N3046B	Δ♦MOTA	222 - 22
	CEN	
	DII	
	ESP	
	ETC	
	♦GSE	
	HTN	
	IDC	
	♦MSC	
	SAR	
	SCE	
	SCN	
	♦SIEG	
	SPE	
	SSI	
	THEF	
	WAB	
1N3047	CEN	223 - 7
	DII	
	ESP	
	ETC	
	♦GSE	
	HTN	
	IDC	
	SAR	
	SCE	
	SCN	
	SIEG	
	SSI	
	WAB	
1N3047A	Δ♦MOTA	222 -183
	CEN	
	DII	
	ESP	
	ETC	
	♦GSE	
	HTN	
	IDC	
	MSC	
	SAR	
	SCE	
	SCN	
	SPE	
	SSI	
	WAB	
1N3047B	Δ♦MOTA	222 -167
	CEN	
	DII	
cont.next col.		

TYPE No.	MFRS	Pg&Line
1N3047B (cont.)	ESP	
	ETC	♦GSE
	HTN	IDC
	SAR	SCE
	SCN	♦SIEG
	SPE	SSI
	THEF	WAB
1N3048	CEN	224 - 40
	DII	ESP
	ETC	♦GSE
	HTN	IDC
	SAR	SCE
	SCN	SIEG
	SPE	SSI
	WAB	
1N3048A	Δ♦MOTA	224 - 27
	CEN	DII
	ESP	ETC
	♦GSE	HTN
	IDC	MSC
	SAR	SCE
	SCN	SPE
	SSI	WAB
1N3048B	Δ♦MOTA	224 - 11
	CEN	DII
	ESP	ETC
	♦GSE	HTN
	IDC	SAR
	SCE	SCN
	♦SIEG	SPE
	SSI	THEF
	WAB	
1N3049	CEN	224 -170
	DII	ESP
	ETC	♦GSE
	HTN	IDC
	SAR	SCE
	SCN	SIEG
	SPE	SSI
	WAB	
1N3049A	Δ♦MOTA	224 -159
	CEN	DII
	ESP	ETC
	♦GSE	HTN
	IDC	SAR
	SCE	SCN
	SPE	SSI
	WAB	
1N3049B	Δ♦MOTA	224 -144
	CEN	DII
	ESP	ETC
	GSE	HTN
	IDC	SAR
	SCE	SCN
	♦SIEG	SSI
	THEF	WAB
1N3050	CEN	225 -179
	DII	ESP
	ETC	♦GSE
	HTN	IDC
	SAR	SCE
	SCN	SIEG
	SPE	SSI
		WAB
1N3050A	Δ♦MOTA	225 -166
	CEN	DII
	ESP	ETC
	GSE	HTN
	IDC	SAR
	SCE	SCN
	SPE	SSI
		WAB
1N3050B	Δ♦MOTA	225 -149
	CEN	DII
	ESP	ETC
	GSE	HTN
	IDC	♦MSC
	SAR	SCE
	SCN	♦SIEG
	SSI	THEF
		WAB
1N3051	CEN	226 -181
	DII	ESP
	ETC	♦GSE
	HTN	IDC
	MSC	SAR
	SCE	SCN
	SIEG	SPE
	SSI	UPI
		WAB
1N3051A	Δ♦MOTA	226 -169
	CEN	DII
	ESP	ETC
	♦GSE	HTN
	IDC	SAR
	SCE	SCN
	SSI	WAB
1N3051B	Δ♦MOTA	226 -153
	CEN	DII
	ESP	ETC
	♦GSE	HTN
	IDC	SAR
	SCE	SCN
	♦SIEG	SPE
	SSI	THEF
		WAB
1N3052	ΔTRWS	428 - 70
	♦CODI	EDL
	SCN	♦SOD
		SSI
1N3053	ΔTRWS	428 -198
	♦CODI	EDL
cont.next col.		

TYPE No.	MFRS	Pg&Line
1N3053 (cont.)	SCN	
	♦SOD	SPE
		SSI
1N3054	ΔTRWS	429 -192
	♦CODI	EDL
	SCN	♦SOD
		SSI
1N3055	ΔTRWS	430 - 51
	♦CODI	EDL
	SCN	♦SOD
	SPE	SSI
1N3056	ΔTRWS	430 -136
	♦CODI	EDL
	SCN	♦SOD
		SSI
1N3057	ΔTRWS	431 - 20
	♦CODI	EDL
	SCN	♦SOD
		SSI
1N3058	ΔTRWS	431 - 53
	♦CODI	EDL
	SCN	♦SOD
		SSI
1N3059	ΔTRWS	431 -181
	♦CODI	EDL
	SCN	♦SOD
	SPE	SSI
1N3060	ΔTRWS	431 -210
	♦CODI	EDL
	SCN	♦SOD
		SSI
1N3061	ΔTRWS	432 - 46
	♦CODI	EDL
	SCN	♦SOD
		SSI
1N3062	♦APD	246 - 61
	CEN	HTN
	IDC	MDC
	MSC	SCE
	SLD	SST
	STI	THEF
		TRWS
1N3063	CEN	246 -101
	HTN	IDC
	MDC	MSC
	SCE	SLD
	SPE	SST
	STI	THEF
	TRWS	UPI
1N3064		ΔFSC 246 -102
	♦APD	ASI
	CEN	HTN
	IDC	MDC
	MIC	♦MSC
	RHM	SCE
	SLCB	SLD
	SPE	SST
	STI	THEF
	TRWS	UPI
		WAB
1N3065	CEN	246 -103
	HTN	IDC
	MDC	MSC
	SCE	SLCB
	SLD	SST
		STI
1N3066	CEN	246 - 62
	HTN	IDC
	MDC	MSC
	SCE	SLD
	SPE	SST
	STI	THEF
1N3067	ASI	244 -212
	CEN	HTN
	IDC	MDC
	MSC	SCE
	SLD	SPE
	SST	STI
		WAB
1N3068	CEN	249 - 9
	HTN	IDC
	MDC	MSC
	SCE	SLD
	SST	STI
1N3069	CEN	249 - 43
	HTN	IDC
	MDC	♦MSC
	SCE	SLD
	SST	STI
		THEF
1N3070	Δ♦FSC	249 -101
	ASI	HTN
	IDC	MDC
	MSC	SCE
	SPE	SPR
	SSI	STI
		WAB
1N3071	HTN	249 -102
	IDC	MDC
	MSC	SCE
	SLD	SSI
	SST	STI
		THEF
1N3072	CEN	275 - 44
	EDL	SCN
		UPI
1N3073	CEN	275 - 60
	EDL	IDC
	SCN	UPI
1N3074	CEN	275 - 66
	EDL	IDC
	SCN	UPI

TYPE No.	MFRS	Pg&Line
1N3075	CEN	275 - 81
	EDL	IDC
	SCN	UPI
1N3076	CEN	275 - 85
	EDL	SCN
		UPI
1N3077	CEN	275 - 99
	EDL	SCN
		UPI
1N3078	CEN	275 -101
	EDL	SCN
		UPI
1N3079	CEN	275 -115
	EDL	IDC
	SCN	UPI
1N3080	CEN	275 -126
	EDL	IDC
		SCN
1N3081	CEN	275 -137
	EDL	IDC
		SCN
1N3082	CEN	276 -193
	EDL	SCN
		UPI
1N3083	CEN	277 - 18
	EDL	SCN
		UPI
1N3084	CEN	277 - 50
	EDL	SCN
		WAB
1N3085	Δ♦INR	307 - 68
	CEI	♦DIT
	INRJ	♦SSI
		UPI
1N3086	Δ♦INR	307 -106
	INRJ	♦SSI
	STR	UPI
1N3087	CEI	307 -133
	♦INR	INRJ
	♦SSI	UPI
1N3088	Δ♦INR	307 -172
	CEI	INRJ
	SPE	SSI
	STR	UPI
1N3089	Δ♦INR	307 -192
	INRJ	♦SSI
		UPI
1N3090	Δ♦INR	307 -218
	CEI	INRJ
	♦SSI	STR
		UPI
1N3091	Δ♦INR	308 - 42
	INRJ	♦SSI
	STR	UPI
1N3092	Δ♦INR	404 -105
	CEI	INRJ
	♦SSI	STR
		UPI
1N3097	CEN	248 -215
		♦IDC
1N3098	SSI	222 - 53
1N3098A	CEN	222 - 39
	SSI	
1N3099	SSI	223 -147
1N3099A	CEN	223 -146
	SSI	
1N3100	SSI	225 -180
1N3100A	CEN	225 -167
	SSI	
1N3106	CEN	279 - 28
	SCN	
1N3107	CEN	405 -215
	IDC	SCN
1N3109	IDC	406 - 12
1N3110	IDC	241 - 63
	SSI	
1N3111	Δ♦INR	307 - 44
	CEI	INRJ
	SPE	SSI
1N3121	CEN	249 - 28
	♦IDC	MDC
	SPE	STI
1N3122	CEN	251 -128
	IDC	SPE
		SSI
1N3123	CEN	245 - 72
	CODI	IDC
	MSC	SCE
	SLD	SSI
		SST
1N3124	CEN	245 - 73
	CODI	IDC
	MSC	SCE
	SLD	SSI
		SST
1N3125		♦IDC 242 -210
	MDC	SCE
	SPE	STI
1N3139	CEN	304 - 25
	COO	EDL
		WAB
1N3140	CEN	304 - 47
	♦COO	EDL
		WAB
1N3141	CEN	304 - 56
	COO	EDL
	SSI	WAB
1N3142	CEN	304 - 82
	♦COO	EDL
		WAB
1N3146	ΔIDC	244 -146
	SSI	
1N3147	♦APD	231 -201
cont.next page		

Δ-Registered with JEDEC by this manufacturer

♦-Mfr's data sheet available in microfilm service

1. TYPE No. CROSS INDEX

IN TYPE NUMBER SEQUENCE

TYPE No.	MFRS	Pg&Line
1N3147		
(cont.)	CEN	
MSC	UPI	
1N3148	IDC	183 - 98
1N3151	CRI	425 -126
1N3154	Δ ♦MOTA	183 - 43
♦APD	CDI	
CODI	CRI	
♦GSE	HTN	
IDC	♦MSC	
SCE	♦SIEG	
SPE	THEF	
	TRWS	
1N3154A	Δ ♦MOTA	183 - 44
♦APD	CDI	
CODI	♦GSE	
HTN	IDC	
♦MSC	SCE	
♦SIEG	THEF	
	TRWS	
1N3155	Δ ♦MOTA	183 - 45
♦APD	CDI	
CODI	CRI	
♦GSE	HTN	
IDC	♦MSC	
SCE	♦SIEG	
THEF	TRWS	
	WAB	
1N3155A	Δ ♦MOTA	183 - 46
♦APD	CDI	
CODI	♦GSE	
HTN	IDC	
SCE	♦SIEG	
SPE	THEF	
	TRWS	
1N3156	Δ ♦MOTA	183 - 47
♦APD	CDI	
CODI	CRI	
♦GSE	HTN	
IDC	♦MSC	
SCE	♦SIEG	
THEF	TRWS	
UPI	WAB	
1N3156A	Δ ♦MOTA	183 - 48
♦APD	CDI	
CODI	♦GSE	
HTN	IDC	
SCE	♦SIEG	
THEF	TRWS	
1N3157	Δ ♦MOTA	183 - 49
♦APD	CDI	
CODI	CRI	
♦GSE	HTN	
IDC	♦MSC	
SCE	♦SIEG	
SPE	THEF	
TRWS	WAB	
1N3157A	♦APD	183 - 50
CDI	CODI	
♦GSE	HTN	
IDC	♦MOTA	
SCE	♦SIEG	
THEF	TRWS	
1N3159	CEN	249 - 6
CRI	IDC	
	SSI	
1N3160	CEN	233 - 7
CRI	UPI	
1N3161	ΔPRX	308 -135
ASI	COO	
CRI	EDL	
NJS	SAR	
SSI	WAB	
1N3162	ΔPRX	308 -136
ASI	COO	
CRI	EDL	
NJS	SAR	
SPE	SSI	
	WAB	
1N3163	ΔPRX	308 -137
ASI	COO	
CRI	EDL	
SAR	SSI	
	WAB	
1N3164	ΔPRX	308 -138
ASI	COO	
CRI	EDL	
ETC	HSE	
SAR	SSI	
	WAB	
1N3165	ΔPRX	308 -139
ASI	COO	
CRI	EDL	
SAR	SSI	
	WAB	
1N3166	ΔPRX	308 -140
ASI	COO	
CRI	EDL	
SAR	SSI	
1N3167	ΔPRX	308 -141
ASI	COO	
CRI	EDL	
SAR	SSI	
	WAB	
1N3168	ΔPRX	308 -142
ASI	COO	
CRI	EDL	
ETC	HSE	
SAR	SSI	
	WAB	
1N3169	ΔPRX	308 -143
ASI	COO	
CRI	EDL	
cont.next col.		

TYPE No.	MFRS	Pg&Line
1N3169		
(cont.)	SAR	
SPE	SSI	
	WAB	
1N3170	ΔPRX	308 -144
ASI	COO	
CRI	EDL	
SAR	SSI	
	WAB	
1N3171	ASI	309 - 75
CEN	COO	
CRI	SSI	
	WAB	
1N3171A	ΔPRX	309 - 76
ASI	CEN	
COO	EDL	
SSI	WAB	
1N3172	ASI	309 - 82
CEN	♦COO	
CRI	♦IDC	
SSI	WAB	
1N3172A	ΔPRX	309 - 85
ASI	CEN	
♦COO	EDL	
SSI	WAB	
1N3173	ASI	309 - 86
CEN	COO	
CRI	SSI	
	WAB	
1N3173A	ASI	309 - 87
CEN	COO	
EDL	PRX	
SSI	WAB	
1N3174	ASI	404 -135
CEN	♦COO	
CRI	♦IDC	
NJS	SSI	
	WAB	
1N3174A	ASI	404 -139
CEN	COO	
EDL	PRX	
SSI	WAB	
1N3175	ΔPRX	408 - 9
CRI	♦IDC	
	♦SSI	
1N3176	ΔPRX	410 - 58
CRI	♦SSI	
1N3177	ΔPRX	413 - 29
CRI	SSI	
1N3179	ΔTRWS	231 -202
CEN	CRI	
1N3180	ΔTRWS	232 - 62
CEN	CRI	
1N3181	CRI	228 -106
IDC	STI	
1N3183	CRI	276 -206
	SCN	
1N3184	CRI	277 - 22
	SCN	
1N3185	CRI	277 - 51
	SCN	
1N3186	CRI	401 - 84
	SCN	
1N3187	CRI	411 - 38
	SCN	
1N3188	CRI	415 - 24
IDI	SCN	
1N3189	ASI	280 -210
CEN	CRI	
DII	EDL	
ELT	HTN	
IDI	SAR	
SCN	SLD	
SPE	SSI	
SST	THEF	
UPI	WAB	
1N3190	CEN	281 -115
CRI	DII	
EDL	ELT	
GTC	HTN	
IDC	IDI	
SAR	SCN	
SLD	SPE	
SSI	SST	
THEF	UPI	
1N3191	ASI	282 - 4
CEN	CRI	
DII	EDL	
ELT	GTC	
HTN	IDC	
IDI	SAR	
SCN	SLD	
SPE	SSI	
SST	UPI	
	WAB	
1N3193	ASI	278 - 76
CEN	CRI	
EDL	HTN	
SCN	SPE	
SSI	UPI	
	WAB	
1N3194	ASI	278 -156
CEN	CRI	
EDL	HTN	
IDC	SCN	
SPE	SSI	
UPI	WAB	
1N3195	CEN	279 - 10
CRI	EDL	
HTN	SCN	
SPE	SSI	
	UPI	
1N3196	CEN	277 - 63
cont.next col.		

TYPE No.	MFRS	Pg&Line
1N3196		
(cont.)	CRI	
EDL	HTN	
IDC	SCN	
SPE	SSI	
1N3197	CEN	242 -181
CRI	IDC	
	SSI	
1N3198	CRI	164 - 4
	IDC	
1N3199	CODI	183 - 39
CRI	♦GSE	
	IDC	
1N3200	CODI	183 - 40
CRI	♦GSE	
	IDC	
1N3201	CODI	183 - 41
CRI	♦GSE	
	IDC	
1N3202	CODI	183 - 42
CRI	♦GSE	
	IDC	
1N3203	CEN	248 - 95
CRI	♦IDC	
SLD	SST	
1N3204	CEN	248 -106
CRI	IDC	
1N3206	ΔTRWS	247 - 13
CRI	♦MSC	
SCE	SLD	
	WAB	
1N3207	ΔTRWS	246 - 34
CRI	IDC	
	♦MSC	
1N3208	Δ ♦MOTA	296 - 37
ASI	CEI	
CEN	COO	
CRI	EDL	
ETC	GTC	
HTN	IDI	
INR	INRJ	
MAL	♦PRX	
SAR	SCN	
SLD	SOD	
SPE	SSI	
SST	WAB	
1N3209	Δ ♦MOTA	296 - 62
ASI	CEI	
CEN	COO	
CRI	EDL	
ETC	GTC	
HTN	IDC	
IDI	♦INR	
INRJ	MAL	
♦PRX	SAR	
SCN	SLD	
SOD	SPE	
♦SSI	SST	
	WAB	
1N3210	Δ ♦MOTA	296 -101
ASI	CEI	
CEN	COO	
CRI	EDL	
ETC	GTC	
HTN	IDC	
IDI	♦INR	
INRJ	MAL	
♦PRX	SAR	
SCN	SLD	
SOD	SPE	
♦SSI	SST	
	WAB	
1N3211	Δ ♦MOTA	296 -114
ASI	CEI	
CEN	COO	
CRI	EDL	
ETC	GTC	
HTN	IDI	
♦INR	INRJ	
MAL	♦PRX	
SAR	SCN	
SLD	SOD	
SPE	♦SSI	
SST	WAB	
1N3212	Δ ♦MOTA	296 -141
ASI	CEI	
CEN	COO	
CRI	EDL	
ETC	GTC	
HTN	IDC	
IDI	♦INR	
INRJ	MAL	
♦PRX	SAR	
SCN	SLD	
SOD	SPE	
♦SSI	SST	
	WAB	
1N3213	ΔMOTA	296 -150
ASI	CEI	
CEN	COO	
CRI	EDL	
ETC	GTC	
HTN	IDI	
♦INR	INRJ	
MAL	PRX	
SAR	SCN	
SLD	SOD	
SPE	♦SSI	
SST	WAB	
1N3214	ΔMOTA	296 -167
ASI	CEI	
CEN	COO	
CRI	DIT	
cont.next col.		

TYPE No.	MFRS	Pg&Line
1N3214		
(cont.)	EDL	
GTC	HTN	
IDI	♦INR	
INRJ	MAL	
PRX	SAR	
SCN	SLD	
SOD	SPE	
♦SSI	SST	
	WAB	
1N3215	CEI	242 -214
	CRI	
1N3223	CEN	249 - 95
CRI	IDC	
	SSI	
1N3225	CEN	242 -200
CRI	HTN	
♦IDC	MDC	
1N3227	CEN	276 -151
CRI	HTN	
	IDC	
1N3228	CEN	276 -176
CRI	HTN	
1N3229	CEN	276 -215
CRI	HTN	
1N3230	CEN	277 - 37
CRI	HTN	
1N3231	CEN	277 - 60
CRI	HTN	
1N3232	CEN	401 - 88
CRI	HTN	
	IDC	
1N3233	CEN	405 -217
CRI	HTN	
1N3234	CEN	411 - 41
CRI	HTN	
1N3235	CEN	413 -204
CRI	HTN	
1N3236	CEN	415 - 29
CRI	HTN	
1N3237	CEN	277 -211
CRI	EDL	
HTN	IDC	
1N3238	CEN	278 - 23
CRI	HTN	
1N3239	CEN	278 - 63
CRI	HTN	
	UPI	
1N3240	CEN	278 -145
CRI	HTN	
	UPI	
1N3241	CEN	278 -216
CRI	HTN	
IDC	STI	
1N3242	CEN	279 - 43
CRI	HTN	
	STI	
1N3243	CEN	401 -121
CRI	HTN	
	STI	
1N3244	CEN	406 - 22
CRI	♦HTN	
	STI	
1N3245	CEN	411 - 59
CRI	HTN	
	STI	
1N3246	ASI	280 - 1
CEN	CRI	
EDL	HTN	
IDC	STI	
UPI	WAB	
1N3247	ASI	280 - 69
CEN	CRI	
HTN	STI	
UPI	WAB	
1N3248	CEN	280 -159
CRI	HTN	
STI	UPI	
1N3249	CEN	281 - 65
CRI	HTN	
STI	UPI	
1N3250	CEN	281 -180
CRI	HTN	
	STI	
1N3251	CEN	282 - 53
CRI	HTN	
IDC	STI	
1N3252	CEN	401 -178
	CRI	
1N3253	ASI	278 - 77
CEN	CRI	
EDL	HTN	
SCN	SPE	
UPI	WAB	
1N3254	ASI	278 -157
CEN	CRI	
EDL	HTN	
SCN	SPE	
UPI	WAB	
1N3255	CEN	279 - 11
CRI	EDL	
HTN	SCN	
SPE	UPI	
1N3256	ASI	277 - 64
CEN	CRI	
EDL	HTN	
SCN	SPE	
	WAB	
1N3257	ΔTRWS	246 -175
CEN	CRI	
HTN	MDC	
SLD	SST	
1N3258	ΔTRWS	246 -176
cont.next col.		

TYPE No.	MFRS	Pg&Line
1N3258		
(cont.)	CEN	
CRI	HTN	
MDC	SLD	
	SST	
1N3260	ΔPRX	308 - 62
ASI	CEN	
COO	CRI	
EDL	ETC	
HSE	HTN	
NJS	SAR	
♦SSI	UPI	
	WAB	
1N3261	ΔPRX	308 - 69
ASI	CEN	
COO	CRI	
EDL	ETC	
HSE	HTN	
IDC	NJS	
SAR	♦SSI	
	UPI	
1N3262	ΔPRX	308 - 73
ASI	CEN	
COO	CRI	
EDL	ETC	
HSE	HTN	
IDC	SAR	
♦SSI	UPI	
1N3263	Δ ♦PRX	308 - 78
ASI	CEN	
COO	CRI	
EDL	ETC	
HSE	HTN	
IDC	SAR	
SPE	♦SSI	
UPI	WAB	
1N3264	ΔPRX	308 - 80
ASI	CEN	
♦COO	CRI	
EDL	ETC	
HSE	HTN	
♦IDC	SAR	
	SSI	
1N3265	ΔPRX	308 - 86
ASI	CEN	
COO	CRI	
EDL	ETC	
HSE	HTN	
IDC	SAR	
SPE	♦SSI	
	UPI	
1N3266	ΔPRX	308 - 88
ASI	CEN	
COO	CRI	
EDL	ETC	
HSE	HTN	
SAR	♦SSI	
1N3267	Δ ♦PRX	308 - 95
ASI	CEN	
COO	CRI	
EDL	ETC	
HSE	HTN	
♦IDC	SAR	
♦SSI	UPI	
1N3268	ΔPRX	308 -103
ASI	CEN	
COO	CRI	
EDL	HTN	
SAR	♦SSI	
	UPI	
1N3269	Δ ♦PRX	308 -107
ASI	CEN	
COO	CRI	
EDL	HTN	
♦IDC	SAR	
SSI	UPI	
1N3270	ΔPRX	308 -109
ASI	CEN	
COO	CRI	
EDL	HTN	
♦SSI	STR	
1N3271	ΔPRX	308 -114
ASI	CEN	
COO	CRI	
EDL	HTN	
♦IDC	♦SSI	
	STR	
1N3272	ΔPRX	308 -116
ASI	CEN	
COO	CRI	
EDL	HTN	
♦SSI	STR	
1N3273	ΔPRX	404 -114
ASI	CEN	
COO	CRI	
EDL	HTN	
♦IDC	NJS	
SPE	♦SSI	
	STR	
1N3274	ΔPRX	407 -207
ASI	COO	
CRI	EDL	
HTN	♦IDC	
♦SSI	STR	
1N3275	ΔPRX	410 - 38
ASI	CRI	
EDL	HTN	
♦SSI	STR	
1N3276	ΔPRX	413 - 11
ASI	CRI	
EDL	HTN	
♦SSI	STR	
1N3277	CEN	278 - 74
cont.next page		

Δ-Registered with JEDEC by this manufacturer

♦-Mfr's data sheet available in microfilm service

1. TYPE No. CROSS INDEX

IN TYPE NUMBER SEQUENCE

TYPE No.	MFRS	Pg&Line
1N3277		
(cont.)	CRI	
EDL	ETC	
HTN	SAR	
SPE	UPI	
1N3278	ASI	278 -154
CEN	CRI	
EDL	ETC	
HTN	UPI	
	WAB	
1N3279	ASI	279 - 8
CEN	CRI	
EDL	ETC	
HTN	SPE	
	WAB	
1N3280	ASI	279 - 51
CEN	CRI	
EDL	ETC	
HTN	WAB	
1N3281	CEN	401 -127
CRI	EDL	
	HTN	
1N3282	CEN	401 - 27
♦CODI	CRI	
EDL	HTN	
SCN	STR	
	THEF	
1N3283	♦CODI	410 -216
CRI	EDL	
HTN	SPE	
STR	THEF	
1N3284	♦CODI	414 -200
CRI	EDL	
HTN	SCN	
SPE	STR	
	THEF	
1N3285	♦CODI	417 -111
CRI	EDL	
HTN	SCN	
STR	THEF	
1N3286	♦CODI	419 - 75
CRI	EDL	
HTN	SCN	
SPE	STR	
	THEF	
1N3287	CEN	163 - 4
CRI	HTN	
IDC	ITTG	
SCE	STI	
	UPI	
1N3287W	IDC	163 - 5
STI	UPI	
1N3288	ASI	305 -198
CEN	♦COO	
CRI	EDL	
HTN	IDC	
♦INR	INRJ	
PRX	SAR	
♦SSI	UPI	
	WAB	
1N3288A	Δ ♦PRX	305 -199
ASI	CEN	
♦COO	EDL	
ETC	HSE	
HTN	IDC	
♦INR	INRJ	
♦SSEI	♦SSI	
	WAB	
1N3289	ASI	306 - 5
CEN	♦COO	
CRI	EDL	
HTN	IDC	
♦INR	INRJ	
PRX	♦SAR	
SPE	♦SSI	
TIC	UPI	
	WAB	
1N3289A	Δ ♦PRX	306 - 6
ASI	CEN	
♦COO	EDL	
ETC	HSE	
HTN	IDC	
♦INR	INRJ	
♦SSEI	♦SSI	
	WAB	
1N3290	ASI	306 - 21
CEN	♦COO	
CRI	EDL	
HTN	IDC	
♦INR	INRJ	
PRX	♦SAR	
SPE	♦SSI	
UPI	WAB	
1N3290A	Δ ♦PRX	306 - 22
ASI	CEN	
♦COO	EDL	
ETC	HSE	
HTN	IDC	
♦INR	INRJ	
♦SSEI	♦SSI	
	WAB	
1N3291	ASI	306 - 66
CEN	COO	
CRI	EDL	
HTN	♦IDC	
♦INR	INRJ	
PRX	♦SAR	
SPE	♦SSI	
TIC	UPI	
	WAB	
1N3291A	Δ ♦PRX	306 - 67
ASI	CEN	
♦COO	EDL	
cont.next col.		

TYPE No.	MFRS	Pg&Line
1N3291A		
(cont.)	ETC	
HSE	HTN	
IDC	♦INR	
INRJ	♦SSEI	
♦SSI	WAB	
1N3291R	IDC	306 - 68
1N3292	ASI	306 - 81
CEN	♦COO	
CRI	EDL	
HTN	♦INR	
INRJ	PRX	
SAR	SPE	
♦SSI	UPI	
	WAB	
1N3292A	ASI	306 - 82
CEN	♦COO	
EDL	HTN	
♦PRX	♦SSEI	
♦SSI	WAB	
1N3292B	ΔPRX	306 - 83
ASI	ETC	
HSE	HTN	
♦INR	INRJ	
	♦SSI	
1N3293	ASI	306 -117
CEN	♦COO	
CRI	EDL	
HTN	♦IDC	
♦INR	INRJ	
PRX	♦SAR	
SPE	♦SSI	
UPI	WAB	
1N3293A	Δ ♦PRX	306 -118
ASI	CEN	
♦COO	EDL	
HTN	♦IDC	
♦INR	INRJ	
SPE	♦SSEI	
♦SSI	WAB	
1N3293R	IDC	306 -119
1N3294	ASI	306 -171
CEN	♦COO	
CRI	EDL	
HTN	♦IDC	
♦INR	INRJ	
PRX	♦SAR	
SPE	♦SSI	
TIC	UPI	
	WAB	
1N3294A	Δ ♦PRX	306 -172
ASI	CEN	
♦COO	EDL	
HTN	♦IDC	
♦INR	INRJ	
♦SSEI	♦SSI	
	WAB	
1N3294R	IDC	306 -173
1N3295	ASI	404 - 75
CEN	♦COO	
CRI	EDL	
HTN	♦IDC	
♦INR	INRJ	
NJS	PRX	
♦SAR	SPE	
♦SSI	TIC	
UPI	WAB	
1N3295A	Δ ♦PRX	404 - 76
ASI	CEN	
♦COO	EDL	
HTN	♦IDC	
♦INR	INRJ	
SPE	♦SSEI	
♦SSI	WAB	
1N3295R	IDC	404 - 77
1N3296	ASI	407 -163
CEN	♦COO	
CRI	DIT	
EDL	HTN	
♦IDC	♦INR	
INRJ	PRX	
♦SAR	♦SSI	
TIC	UPI	
	WAB	
1N3296A	Δ ♦PRX	407 -164
ASI	CEN	
♦COO	EDL	
HTN	♦IDC	
♦INR	INRJ	
SPE	♦SSEI	
♦SSI	WAB	
1N3296R	IDC	407 -165
1N3297	CRI	410 - 15
EDL	HTN	
♦SAR	♦SSI	
1N3297A	Δ ♦PRX	410 - 16
EDL	♦HTN	
♦SSEI	SSI	
1N3298	ΔTRWS	251 -217
CEN	CRI	
HTN	IDC	
SCE	SLD	
SSI	SST	
1N3298A	CEN	252 -144
HTN	SSI	
1N3305	ΔMSC	379 - 94
CEN	CRI	
DII	ETC	
♦GSE	HTN	
SCN	SIEG	
SLD	SST	
1N3305A	ΔMSC	379 - 89
cont.next col.		

TYPE No.	MFRS	Pg&Line
1N3305A		
(cont.)	CEN	
DII	ETC	
♦GSE	HTN	
♦MOTA	NJS	
SCE	SCN	
	SST	
1N3305B	Δ ♦MSC	379 - 82
CEN	DII	
ETC	♦GSE	
HTN	♦MOTA	
SCE	SCN	
♦SIEG	SPE	
SST	THEF	
1N3306	ΔMSC	380 - 17
CEN	CRI	
DII	ETC	
♦GSE	HTN	
IDC	NJS	
SCE	SCN	
SIEG	SLD	
SPE	SST	
1N3306A	ΔMSC	380 - 12
CEN	DII	
ETC	♦GSE	
HTN	IDC	
♦MOTA	NJS	
SCE	SCN	
	SST	
1N3306B	Δ ♦MSC	380 - 5
CEN	DII	
ETC	♦GSE	
HTN	IDC	
♦MOTA	SCE	
SCN	♦SIEG	
SPE	SST	
	THEF	
1N3307	Δ ♦MSC	380 -130
CEN	CRI	
DII	ETC	
♦GSE	HTN	
NJS	SCE	
SCN	SIEG	
SLD	SPE	
SST	UPI	
	WAB	
1N3307A	ΔMSC	380 -127
CEN	DII	
ETC	♦GSE	
HTN	♦MOTA	
NJS	SCE	
SCN	SPE	
	SST	
1N3307B	Δ ♦MSC	380 -122
CEN	DII	
ETC	♦GSE	
HTN	♦MOTA	
SCE	SCN	
♦SIEG	SST	
	THEF	
1N3308	ΔMSC	381 - 53
CEN	CRI	
DII	ETC	
♦GSE	HTN	
NJS	SCE	
SCN	SIEG	
SLD	SPE	
	SST	
1N3308A	ΔMSC	381 - 50
CEN	DII	
ETC	♦GSE	
HTN	♦MOTA	
NJS	SCE	
SCN	SST	
1N3308B	Δ ♦MSC	381 - 44
CEN	DII	
ETC	♦GSE	
HTN	♦MOTA	
SCE	SCN	
♦SIEG	SST	
THEF	UPI	
1N3309	ΔMSC	381 -161
CEN	CRI	
DII	♦ETC	
GSE	HTN	
NJS	SCE	
SCN	SIEG	
SLD	SST	
	WAB	
1N3309A	ΔMSC	381 -158
CEN	DII	
ETC	♦GSE	
HTN	♦MOTA	
NJS	SCE	
SCN	SST	
	WAB	
1N3309B	Δ ♦MSC	381 -153
CEN	DII	
ETC	♦GSE	
HTN	♦MOTA	
SCE	SCN	
SIEG	SST	
THEF	WAB	
1N3310	ΔMSC	382 - 49
CEN	CRI	
DII	ETC	
♦GSE	HTN	
NJS	SCE	
SCN	SIEG	
SLD	SPE	
	SST	
1N3310A	ΔMSC	382 - 46
CEN	DII	
cont.next col.		

TYPE No.	MFRS	Pg&Line
1N3310A		
(cont.)	ETC	
♦GSE	HTN	
♦MOTA	NJS	
SCE	SCN	
	SST	
1N3310B	Δ ♦MSC	382 - 41
CEN	DII	
ETC	♦GSE	
HTN	♦MOTA	
SCE	SCN	
♦SIEG	SST	
THEF	TIC	
1N3311	ΔMSC	382 -172
CEN	CRI	
DII	ETC	
♦GSE	HTN	
IDC	NJS	
SCE	SCN	
SIEG	SLD	
SPE	SST	
1N3311A	ΔMSC	382 -169
CEN	DII	
ETC	♦GSE	
HTN	IDC	
♦MOTA	NJS	
SCE	SCN	
SPE	SST	
1N3311B	Δ ♦MSC	382 -164
CEN	DII	
ETC	♦GSE	
HTN	IDC	
♦MOTA	SCE	
SCN	♦SIEG	
SPE	SST	
THEF	WAB	
1N3312	ΔMSC	383 - 79
CEN	CRI	
DII	ETC	
♦GSE	HTN	
NJS	SCE	
SCN	SIEG	
SLD	SST	
1N3312A	ΔMSC	383 - 76
CEN	DII	
ETC	♦GSE	
HTN	♦MOTA	
NJS	SCE	
SCN	SST	
1N3312B	Δ ♦MSC	383 - 71
CEN	DII	
ETC	♦GSE	
HTN	♦MOTA	
SCE	SCN	
♦SIEG	SPE	
SST	THEF	
1N3313	ΔMSC	383 -149
CEN	CRI	
DII	♦ETC	
GSE	HTN	
NJS	SCE	
SCN	SIEG	
SLD	SPE	
	SST	
1N3313A	ΔMSC	383 -146
CEN	DII	
ETC	♦GSE	
HTN	♦MOTA	
NJS	SCE	
SCN	SST	
1N3313B	Δ ♦MSC	383 -142
CEN	DII	
ETC	♦GSE	
HTN	♦MOTA	
SCE	SCN	
♦SIEG	SPE	
	SST	
1N3314	ΔMSC	384 - 58
CEN	CRI	
DII	ETC	
♦GSE	HTN	
NJS	SCE	
SCN	SIEG	
SLD	SPE	
SST	WAB	
1N3314A	ΔMSC	384 - 55
CEN	DII	
ETC	♦GSE	
HTN	♦MOTA	
NJS	SCE	
SCN	SPE	
SST	WAB	
1N3314B	Δ ♦MSC	384 - 50
CEN	DII	
ETC	♦GSE	
HTN	♦MOTA	
SCE	SCN	
♦SIEG	SPE	
SST	THEF	
UPI	WAB	
1N3315	ΔMSC	384 -155
CEN	CRI	
DII	ETC	
♦GSE	HTN	
NJS	SCE	
SCN	SIEG	
SLD	SPE	
	SST	
1N3315A	ΔMSC	384 -152
CEN	DII	
ETC	♦GSE	
HTN	♦MOTA	
NJS	SCE	
SCN	SST	

TYPE No.	MFRS	Pg&Line
1N3315B	Δ ♦MSC	384 -147
CEN	DII	
DIT	ETC	
♦GSE	HTN	
♦MOTA	SCE	
SCN	♦SIEG	
SPE	SST	
	THEF	
1N3316	ΔMSC	385 - 12
CEN	CRI	
DII	ETC	
♦GSE	HTN	
NJS	SCE	
SCN	SIEG	
SLD	SST	
1N3316A	ΔMSC	385 - 9
CEN	DII	
ETC	♦GSE	
HTN	♦MOTA	
NJS	SCE	
SCN	SST	
1N3316B	Δ ♦MSC	385 - 5
CEN	DII	
ETC	♦GSE	
HTN	♦MOTA	
SCE	SCN	
♦SIEG	SST	
1N3317	ΔMSC	385 -120
CEN	CRI	
DII	ETC	
♦GSE	HTN	
NJS	SCE	
SCN	SIEG	
SLD	SPE	
	SST	
1N3317A	ΔMSC	385 -117
CEN	DII	
ETC	♦GSE	
HTN	♦MOTA	
NJS	SCE	
SCN	SPE	
	SST	
1N3317B	Δ ♦MSC	385 -112
CEN	DII	
ETC	♦GSE	
HTN	♦MOTA	
SCE	SCN	
♦SIEG	SPE	
SST	THEF	
	UPI	
1N3318	ΔMSC	385 -168
CEN	CRI	
DII	ETC	
♦GSE	HTN	
NJS	SCE	
SCN	SIEG	
SLD	SST	
1N3318A	ΔMSC	385 -165
CEN	DII	
ETC	♦GSE	
HTN	♦MOTA	
NJS	SCE	
SCN	SST	
1N3318B	Δ ♦MSC	385 -161
CEN	DII	
ETC	♦GSE	
HTN	♦MOTA	
SCE	SCN	
♦SIEG	SST	
1N3319	ΔMSC	386 - 67
CEN	CRI	
DII	ETC	
♦GSE	HTN	
NJS	SCE	
SCN	SIEG	
SLD	SPE	
SST	WAB	
1N3319A	ΔMSC	386 - 64
CEN	DII	
ETC	♦GSE	
HTN	♦MOTA	
MULB	NJS	
PHIN	RTCF	
SCE	SCN	
SST	VALG	
1N3319B	Δ ♦MSC	386 - 59
CEN	DII	
ETC	♦GSE	
HTN	♦MOTA	
MULB	PHIN	
RTCF	SCE	
SCN	♦SIEG	
SPE	SST	
THEF	VALG	
1N3320	ΔMSC	386 -174
CEN	CRI	
DII	♦ETC	
GSE	HTN	
NJS	SCE	
SCN	SIEG	
SLD	SST	
	WAB	
1N3320A	ΔMSC	386 -171
CEN	DII	
♦ETC	GSE	
HTN	♦MOTA	
NJS	SCE	
SCN	SPE	
	SST	
1N3320B	Δ ♦MSC	386 -166
CEN	DII	
ETC	♦GSE	
HTN	♦MOTA	
cont.next page		

Δ-Registered with JEDEC by this manufacturer

♦-Mfr's data sheet available in microfilm service

1. TYPE No. CROSS INDEX

IN TYPE NUMBER SEQUENCE

TYPE No.	MFRS	Pg&Line
1N3320B		
(cont.)	SCE	
SCN	♦SIEG	
SPE	SST	
	THEF	
1N3321	ΔMSC	387 - 87
CEN	CRI	
DII	ETC	
♦GSE	HTN	
NJS	SCE	
SCN	SIEG	
SLD	SPE	
	SST	
1N3321A	ΔMSC	387 - 84
CEN	DII	
ETC	♦GSE	
HTN	♦MOTA	
NJS	SCE	
SCN	SST	
	UPI	
1N3321B	Δ♦MSC	387 - 79
CEN	DII	
ETC	♦GSE	
HTN	♦MOTA	
SCE	SCN	
SIEG	♦SPE	
SST	THEF	
UPI	WAB	
1N3322	ΔMSC	387 -129
CEN	CRI	
DII	ETC	
♦GSE	HTN	
NJS	SCE	
SCN	SIEG	
SLD	SST	
1N3322A	ΔMSC	387 -126
CEN	DII	
ETC	♦GSE	
HTN	♦MOTA	
NJS	SCE	
SCN	SST	
1N3322B	Δ♦MSC	387 -122
CEN	DII	
ETC	♦GSE	
HTN	♦MOTA	
SCE	SCN	
♦SIEG	SST	
1N3323	ΔMSC	388 - 29
CEN	CRI	
DII	ETC	
♦GSE	HTN	
NJS	SCE	
SCN	SIEG	
SLD	SPE	
	SST	
1N3323A	ΔMSC	388 - 26
CEN	DII	
ETC	♦GSE	
HTN	♦MOTA	
NJS	SCE	
SCN	SPE	
	SST	
1N3323B	Δ♦MSC	388 - 21
CEN	DII	
ETC	♦GSE	
HTN	♦MOTA	
SCE	SCN	
♦SIEG	SPE	
SST	THEF	
	UPI	
1N3324	ΔMSC	388 -145
CEN	CRI	
DII	ETC	
♦GSE	HTN	
NJS	SCE	
SCN	SIEG	
SLD	SPE	
	SST	
1N3324A	ΔMSC	388 -142
CEN	DII	
ETC	♦GSE	
HTN	♦MOTA	
NJS	SCE	
SCN	SST	
	WAB	
1N3324B	Δ♦MSC	388 -137
CEN	DII	
ETC	♦GSE	
HTN	♦MOTA	
SCE	SCN	
♦SIEG	SPE	
SST	THEF	
	WAB	
1N3325	ΔMSC	389 - 54
CEN	CRI	
DII	ETC	
♦GSE	HTN	
NJS	SCE	
SCN	SIEG	
SLD	SPE	
	SST	
1N3325A	ΔMSC	389 - 51
CEN	DII	
DIT	ETC	
♦GSE	HTN	
♦MOTA	NJS	
SCE	SCN	
SPE	SST	
1N3325B	Δ♦MSC	389 - 46
CEN	DII	
ETC	♦GSE	
HTN	♦MOTA	
SCE	SCN	
cont.next col.		

TYPE No.	MFRS	Pg&Line
1N3325B		
(cont.)	♦SIEG	
SST	THEF	
1N3326	ΔMSC	389 -163
CEN	CRI	
DII	ETC	
♦GSE	HTN	
NJS	SCE	
SCN	SIEG	
SLD	SPE	
SST	UPI	
	WAB	
1N3326A	ΔMSC	389 -160
CEN	DII	
ETC	♦GSE	
HTN	♦MOTA	
NJS	SCE	
SCN	SST	
1N3326B	Δ♦MSC	389 -155
CEN	♦GSE	
HTN	MOTA	
SCN	♦SIEG	
SST	THEF	
UPI	WAB	
1N3327	ΔMSC	390 - 54
CEN	CRI	
DII	ETC	
♦GSE	HTN	
NJS	SCE	
SCN	SIEG	
SLD	SPE	
	SST	
1N3327A	ΔMSC	390 - 51
CEN	DII	
ETC	♦GSE	
HTN	♦MOTA	
NJS	SCE	
SCN	SST	
1N3327B	Δ♦MSC	390 - 46
CEN	DII	
ETC	♦GSE	
HTN	♦MOTA	
SCE	SCN	
♦SIEG	SST	
	THEF	
1N3328	ΔMSC	390 -160
CEN	CRI	
DII	ETC	
♦GSE	HTN	
NJS	SCE	
SCN	SIEG	
SLD	SST	
1N3328A	ΔMSC	390 -157
CEN	DII	
ETC	♦GSE	
HTN	♦MOTA	
NJS	SCE	
SCN	SPE	
	SST	
1N3328B	Δ♦MSC	390 -152
CEN	DII	
ETC	♦GSE	
HTN	♦MOTA	
SCE	SCN	
♦SIEG	SST	
	THEF	
1N3329	ΔMSC	391 - 13
CEN	CRI	
DII	ETC	
♦GSE	HTN	
NJS	SCE	
SCN	SIEG	
SLD	SST	
1N3329A	ΔMSC	391 - 10
CEN	DII	
ETC	♦GSE	
HTN	♦MOTA	
NJS	SCE	
SCN	SST	
1N3329B	Δ♦MSC	391 - 6
CEN	DII	
ETC	♦GSE	
HTN	♦MOTA	
SCE	SCN	
♦SIEG	SST	
1N3330	ΔMSC	391 - 96
CEN	CRI	
DII	ETC	
♦GSE	HTN	
NJS	SCE	
SCN	SIEG	
SLD	SST	
	UPI	
1N3330A	ΔMSC	391 - 93
CEN	DII	
ETC	♦GSE	
HTN	♦MOTA	
NJS	SCE	
SCN	SST	
1N3330B	Δ♦MSC	391 - 88
CEN	DII	
ETC	♦GSE	
HTN	♦MOTA	
SCE	SCN	
♦SIEG	SST	
	THEF	
1N3331	ΔMSC	391 -152
CEN	CRI	
DII	ETC	
♦GSE	HTN	
NJS	SCE	
SCN	SIEG	
SLD	SPE	
SST	UPI	

TYPE No.	MFRS	Pg&Line
1N3331A	ΔMSC	391 -149
CEN	DII	
ETC	♦GSE	
HTN	MOTA	
NJS	SCE	
SCN	SPE	
	SST	
1N3331B	Δ♦MSC	391 -145
CEN	DII	
ETC	♦GSE	
HTN	♦MOTA	
SCE	SCN	
♦SIEG	SPE	
	SST	
1N3332	ΔMSC	392 - 26
CEN	CRI	
DII	ETC	
♦GSE	HTN	
NJS	SCE	
SCN	SIEG	
SLD	SST	
1N3332A	ΔMSC	392 - 23
CEN	DII	
ETC	♦GSE	
HTN	♦MOTA	
NJS	SCE	
SCN	SPE	
	SST	
1N3332B	Δ♦MSC	392 - 18
CEN	DII	
ETC	GSE	
HTN	♦MOTA	
SCE	SCN	
♦SIEG	SPE	
SST	THEF	
1N3333	ΔMSC	392 - 58
CEN	CRI	
DII	ETC	
♦GSE	HTN	
NJS	SCE	
SCN	SIEG	
SLD	SST	
	WAB	
1N3333A	ΔMSC	392 - 56
CEN	DII	
ETC	♦GSE	
HTN	♦MOTA	
NJS	SCE	
SCN	SST	
1N3333B	Δ♦MSC	392 - 53
CEN	DII	
ETC	♦GSE	
HTN	♦MOTA	
SCE	SCN	
♦SIEG	SST	
1N3334	ΔMSC	392 -153
CEN	CRI	
DII	ETC	
♦GSE	HTN	
NJS	SCE	
SCN	SIEG	
SLD	SST	
	UPI	
1N3334A	ΔMSC	392 -150
CEN	DII	
ETC	♦GSE	
HTN	♦MOTA	
NJS	SCE	
SCN	SST	
1N3334B	Δ♦MSC	392 -146
CEN	DII	
ETC	♦GSE	
HTN	♦MOTA	
SCE	SCN	
♦SIEG	SST	
	THEF	
1N3335	ΔMSC	393 - 66
CEN	CRI	
DII	ETC	
♦GSE	HTN	
NJS	SCE	
SCN	SIEG	
SLD	SST	
	UPI	
1N3335A	ΔMSC	393 - 63
CEN	DII	
ETC	♦GSE	
HTN	♦MOTA	
NJS	SCE	
SCN	SPE	
	SST	
1N3335B	Δ♦MSC	393 - 58
CEN	DII	
ETC	♦GSE	
HTN	♦MOTA	
SCE	SCN	
♦SIEG	SST	
	THEF	
1N3336	ΔMSC	393 -160
CEN	CRI	
DII	ETC	
♦GSE	HTN	
NJS	SCE	
SCN	SIEG	
SLD	SPE	
	SST	
1N3336A	ΔMSC	393 -157
CEN	DII	
ETC	♦GSE	
HTN	♦MOTA	
NJS	SCE	
SCN	SST	
1N3336B	Δ♦MSC	393 -152
cont.next col.		

TYPE No.	MFRS	Pg&Line
1N3336B		
(cont.)	CEN	
DII	ETC	
♦GSE	HTN	
♦MOTA	SCE	
SCN	♦SIEG	
SST	THEF	
	TIC	
1N3337	ΔMSC	394 - 82
CEN	CRI	
DII	ETC	
♦GSE	HTN	
NJS	SCE	
SCN	SIEG	
SLD	SPE	
SST	UPI	
1N3337A	ΔMSC	394 - 79
CEN	DII	
ETC	♦GSE	
HTN	♦MOTA	
NJS	SCE	
SCN	SPE	
	SST	
1N3337B	Δ♦MSC	394 - 74
CEN	DII	
ETC	♦GSE	
HTN	♦MOTA	
SCE	SCN	
♦SIEG	SPE	
SST	THEF	
1N3338	ΔMSC	394 -185
CEN	CRI	
DII	ETC	
♦GSE	HTN	
NJS	SCE	
SCN	SIEG	
SLD	SST	
1N3338A	ΔMSC	394 -182
CEN	DII	
ETC	♦GSE	
HTN	♦MOTA	
NJS	SCE	
SCN	SPE	
	SST	
1N3338B	Δ♦MSC	394 -177
CEN	DII	
ETC	♦GSE	
HTN	♦MOTA	
SCE	SCN	
♦SIEG	SPE	
SST	THEF	
TIC	UPI	
1N3339	ΔMSC	395 - 94
CEN	CRI	
DII	ETC	
♦GSE	HTN	
NJS	SCE	
SCN	SIEG	
SLD	SPE	
SST	WAB	
1N3339A	ΔMSC	395 - 91
CEN	DII	
ETC	♦GSE	
HTN	♦MOTA	
NJS	SCE	
SCN	SST	
1N3339B	Δ♦MSC	395 - 86
CEN	DII	
ETC	♦GSE	
HTN	♦MOTA	
SCE	SCN	
♦SIEG	SST	
	THEF	
1N3340	ΔMSC	396 - 6
CEN	CRI	
DII	ETC	
♦GSE	HTN	
NJS	SCE	
SCN	SIEG	
SLD	SST	
1N3340A	ΔMSC	396 - 3
CEN	DII	
ETC	♦GSE	
HTN	MOTA	
NJS	SCE	
SCN	SST	
1N3340B	Δ♦MSC	395 -196
CEN	DII	
ETC	♦GSE	
HTN	♦MOTA	
SCE	SCN	
♦SIEG	SST	
	THEF	
1N3341	ΔMSC	396 - 43
CEN	CRI	
DII	ETC	
♦GSE	HTN	
NJS	SCE	
SCN	SIEG	
SLD	SST	
1N3341A	ΔMSC	396 - 40
CEN	DII	
ETC	♦GSE	
HTN	♦MOTA	
NJS	SCE	
SCN	SST	
1N3341B	Δ♦MSC	396 - 36
CEN	DII	
ETC	♦GSE	
HTN	♦MOTA	
SCE	SCN	
♦SIEG	SST	
1N3342	ΔMSC	396 -121
cont.next col.		

TYPE No.	MFRS	Pg&Line
1N3342		
(cont.)	CEN	
CRI	DII	
ETC	♦GSE	
HTN	NJS	
SCE	SCN	
SIEG	SLD	
SPE	SST	
	WAB	
1N3342A	ΔMSC	396 -118
CEN	DII	
ETC	♦GSE	
HTN	♦MOTA	
NJS	SCE	
SCN	SST	
1N3342B	Δ♦MSC	396 -113
CEN	DII	
ETC	♦GSE	
HTN	♦MOTA	
SCE	SCN	
♦SIEG	SST	
	THEF	
1N3343	ΔMSC	397 - 11
CEN	CRI	
DII	ETC	
♦GSE	HTN	
NJS	SCE	
SCN	SIEG	
SLD	SST	
	WAB	
1N3343A	ΔMSC	397 - 8
CEN	DII	
ETC	♦GSE	
HTN	♦MOTA	
NJS	SCE	
SCN	SST	
1N3343B	Δ♦MSC	397 - 3
CEN	DII	
ETC	♦GSE	
HTN	♦MOTA	
SCE	SCN	
♦SIEG	SST	
THEF	UPI	
	WAB	
1N3344	ΔMSC	397 - 97
CEN	CRI	
DII	ETC	
♦GSE	HTN	
NJS	SCE	
SCN	SIEG	
SLD	SST	
1N3344A	ΔMSC	397 - 94
CEN	DII	
ETC	♦GSE	
HTN	♦MOTA	
NJS	SCE	
SCN	SST	
1N3344B	Δ♦MSC	397 - 89
CEN	DII	
ETC	♦GSE	
HTN	♦MOTA	
SCE	SCN	
♦SIEG	SST	
	THEF	
1N3345	ΔMSC	397 -154
CEN	CRI	
DII	ETC	
♦GSE	HTN	
NJS	SCE	
SCN	SIEG	
SLD	SST	
1N3345A	ΔMSC	397 -152
CEN	DII	
ETC	♦GSE	
HTN	♦MOTA	
NJS	SCE	
SCN	SST	
1N3345B	Δ♦MSC	397 -149
CEN	DII	
ETC	♦GSE	
HTN	♦MOTA	
SCE	SCN	
♦SIEG	SST	
1N3346	ΔMSC	398 - 40
CEN	CRI	
DII	ETC	
♦GSE	HTN	
NJS	SCE	
SCN	SIEG	
SLD	SPE	
	SST	
1N3346A	ΔMSC	398 - 37
CEN	DII	
ETC	♦GSE	
HTN	♦MOTA	
NJS	SCE	
SCN	SST	
1N3346B	Δ♦MSC	398 - 32
CEN	DII	
ETC	♦GSE	
HTN	♦MOTA	
SCE	SCN	
♦SIEG	SPE	
SST	THEF	
	WAB	
1N3347	ΔMSC	398 -117
CEN	CRI	
DII	ETC	
♦GSE	HTN	
NJS	SCE	
SCN	SIEG	
SLD	SPE	
	SST	

Δ-Registered with JEDEC by this manufacturer

♦-Mfr's data sheet available in microfilm service

1. TYPE No. CROSS INDEX

IN TYPE NUMBER SEQUENCE

TYPE No.	MFRS	Pg&Line
1N3347A	ΔMSC	398 -114
	CEN	DII
	ETC	♦GSE
	HTN	♦MOTA
	NJS	SCE
	SCN	SST
1N3347B	Δ ♦MSC	398 -109
	CEN	DII
	ETC	♦GSE
	HTN	♦MOTA
	SCE	SCN
	♦SIEG	SPE
	SST	THEF
		WAB
1N3348	ΔMSC	398 -159
	CEN	CRI
	DII	ETC
	♦GSE	HTN
	NJS	SCE
	SCN	SIEG
	SLD	SPE
		SST
1N3348A	ΔMSC	398 -157
	CEN	DII
	ETC	♦GSE
	HTN	♦MOTA
	NJS	SCE
	SCN	SST
1N3348B	Δ ♦MSC	398 -154
	CEN	DII
	ETC	♦GSE
	HTN	♦MOTA
	SCE	SCN
	♦SIEG	SST
1N3349	ΔMSC	399 - 43
	CEN	CRI
	DII	ETC
	♦GSE	HTN
	NJS	SCE
	SCN	SIEG
	SLD	SPE
	SST	WAB
1N3349A	ΔMSC	399 - 40
	CEN	DII
	ETC	♦GSE
	HTN	♦MOTA
	NJS	SCE
	SCN	SST
1N3349B	Δ ♦MSC	399 - 35
	CEN	DII
	ETC	♦GSE
	HTN	♦MOTA
	SCE	SCN
	♦SIEG	SST
	THEF	WAB
1N3350	ΔMSC	399 -138
	CEN	CRI
	DII	ETC
	GSE	HTN
	NJS	SCE
	SCN	SIEG
	SLD	SPE
		SST
1N3350A	ΔMSC	399 -135
	CEN	DII
	ETC	GSE
	HTN	♦MOTA
	NJS	SCE
	SCN	SPE
		SST
1N3350B	Δ ♦MSC	399 -130
	CEN	DII
	ETC	GSE
	HTN	♦MOTA
	SCE	SCN
	♦SIEG	SPE
	SST	THEF
1N3354	CRI	287 -146
1N3355	CRI	287 -149
1N3356	CRI	287 -153
1N3357	CRI	287 -188
1N3358	CRI	287 -210
1N3359	CRI	288 - 25
1N3360	CRI	288 - 61
1N3361	CRI	288 -104
1N3362	CRI	288 -156
1N3363	CRI	288 -204
1N3364	CRI	289 - 24
1N3365	CRI	289 - 70
1N3366	CRI	289 -104
1N3367	CRI	289 -140
1N3368	CRI	289 -171
1N3369	CRI	402 -174
1N3370	CRI	406 -125
1N3371	CRI	411 -105
1N3372	CRI	297 - 88
1N3373	CRI	297 - 89
1N3374	CRI	297 -103
1N3375	CRI	297 -119
1N3376	CRI	297 -132
1N3377	CRI	297 -141
1N3378	CRI	297 -153
1N3379	CRI	297 -168
1N3380	CRI	297 -185
1N3381	CRI	231 - 17
1N3382	CRI	231 - 18
1N3383	CRI	231 - 19
1N3384	CRI	231 - 20
1N3385	CRI	231 - 21
1N3386	CRI	231 - 22
1N3387	CRI	231 - 23
1N3388	CRI	231 - 24
1N3389	CRI	231 - 25
1N3390	CRI	231 - 26
1N3391	CRI	231 - 27
1N3392	CRI	163 - 93
	SCE	
1N3393	CRI	163 -109
	SCE	SPE
		TIC
1N3394	CRI	163 -187
		SCE
1N3395	CRI	164 -179
		SCE
1N3396	CRI	166 - 51
	IDC	SCE
1N3397	CRI	167 -192
	IDC	SCE
1N3398	CRI	170 - 53
		SCE
1N3399	CRI	173 - 12
	IDC	SCE
1N3400	CRI	178 - 47
		SCE
1N3401	CRI	182 - 23
	IDC	SCE
1N3402	CRI	187 -106
		SCE
1N3403	CRI	191 - 2
	IDC	SCE
1N3404	CRI	195 - 2
		SCE
1N3405	CRI	198 -116
		SCE
1N3406	CRI	202 - 9
		SCE
1N3407	CRI	205 - 47
		SCE
1N3408	CRI	208 - 71
		SCE
1N3409	CRI	210 -180
		SCE
1N3410	CRI	213 - 7
		SCE
1N3411	CRI	175 - 77
		SCE
1N3412	CRI	178 - 48
		SCE
1N3413	CRI	180 - 44
		SCE
1N3414	CRI	182 - 24
	IDC	SCE
1N3415	CRI	187 -107
	IDC	SCE
1N3416	CRI	191 - 3
		SCE
1N3417	CRI	195 - 3
		SCE
1N3418	CRI	198 -117
		SCE
1N3419	CRI	202 - 10
		SCE
1N3420	CRI	205 - 48
		SCE
1N3421	CRI	206 -183
		SCE
1N3422	CRI	208 - 72
		SCE
1N3423	CRI	210 -181
		SCE
1N3424	CRI	213 - 8
		SCE
1N3425	CRI	214 -196
		SCE
1N3426	CRI	216 -179
		SCE
1N3427	CRI	218 -146
		SCE
1N3428	CRI	220 - 88
		SCE
1N3429	CRI	222 - 5
		SCE
1N3430	CRI	223 -175
		SCE
1N3431	CRI	225 -132
		SCE
1N3432	CRI	227 - 71
		SCE
1N3465	CEI	234 - 39
	CEN	CRI
	HTN	IDC
	MDC	STI
		UPI
1N3466	CEI	234 - 40
	CEN	CRI
	HTN	ITTG
	MDC	STI
		UPI
1N3467	CRI	244 -101
	HTN	♦IDC
	♦ITTG	SLD
	SSI	SST
	SSY	STI
		UPI
1N3468	CRI	244 -102
	HTN	♦IDC
	SLD	SSI
	SST	STI
1N3469	CEI	234 - 76
	CRI	HTN
	IDC	♦ITTG
	STI	UPI
1N3470	CEI	234 - 77
	CRI	HTN
	IDC	STI
		UPI
1N3471	CRI	245 - 60
		IDC
1N3477	CODI	163 -174
	CRI	IDC
	KSI	SIEG
1N3477A	CEN	163 -171
	CODI	IDC
		KSI
1N3483	CEN	231 - 89
	CRI	HTN
	♦IDC	SSI
		STI
1N3484	CEN	231 - 90
	CRI	HTN
		IDC
1N3485	CRI	249 - 98
1N3486	ASI	401 - 76
	CEN	CRI
	ETC	HTN
	IDC	SCN
	SSI	WAB
1N3487	CEN	405 -211
	CRI	HTN
	IDC	SCN
		SSI
1N3491	ASI	298 -107
	CDIL	CEN
	CRI	HTN
	INRJ	MAL
	♦MOTA	SAR
	SCN	SLD
	SPE	SST
	TRWS	UPI
1N3492	ASI	298 -136
	CDIL	CEN
	CRI	♦DIT
	HTN	INRJ
	MAL	♦MOTA
	SAR	SCN
	SLD	SPE
	SST	TRWS
1N3493	ASI	298 -176
	CDIL	CEN
	CRI	♦DIT
	HTN	INRJ
	MAL	♦MOTA
	SAR	SCN
	SLD	SPE
	SST	TRWS
	UPI	WAB
1N3494	ASI	299 - 7
	CDIL	CEN
	CRI	♦DIT
	HTN	INRJ
	MAL	♦MOTA
	SAR	SCN
	SLD	SPE
		SST
1N3495	ASI	299 - 31
	CDIL	CEN
	CRI	♦DIT
	HTN	INRJ
	MAL	♦MOTA
	SAR	SCN
	SLD	SPE
	SSI	SST
	TIC	UPI
1N3496	♦APD	174 -107
	CDI	CODI
	CRI	HTN
	IDC	MSC
	SCE	SIEG
	SSI	SST
		THEF
1N3497	♦APD	174 -108
	CDI	CODI
	CRI	HTN
	IDC	MSC
	SCE	SIEG
	SSI	THEF
		WAB
1N3498	♦APD	174 -109
	CDI	CODI
	CRI	HTN
	IDC	MSC
	SCE	SIEG
	SSI	THEF
1N3499	♦APD	174 -110
	CDI	CODI
	CRI	HTN
	IDC	MSC
	SCE	SIEG
	SSI	THEF
1N3500	♦APD	174 -111
	CDI	CODI
	CRI	HTN
	IDC	MSC
	SCE	SIEG
	SSI	THEF
1N3501	CDI	176 - 27
	CODI	CRI
	HTN	IDC
	♦MSC	♦SIEG
		SSI
1N3502	CDI	176 - 28
	CODI	CRI
	HTN	IDC
	♦MSC	♦SIEG
	SPE	SSI
		UPI
1N3503	CDI	176 - 29
	CODI	CRI
	HTN	IDC
	♦MSC	♦SIEG
		SSI
1N3503A	CODI	176 - 22
	HTN	IDC
	SPE	SSI
1N3504	CDI	176 - 30
	CODI	CRI
	HTN	IDC
	♦MSC	♦SIEG
		SSI
1N3504A	CODI	176 - 23
	HTN	IDC
		SSI
1N3506	♦APD	165 -204
	CEN	CODI
	CRI	HTN
	IDC	KSI
	MDC	MSC
	SCE	SIEG
		SSI
1N3507	♦APD	166 -175
	CEN	CODI
	CRI	HTN
	IDC	KSI
	MDC	MSC
	SCE	SIEG
		SSI
1N3508	♦APD	167 -141
	CEN	CODI
	CRI	HTN
	IDC	KSI
	MDC	MSC
	SCE	SIEG
		SSI
1N3509	♦APD	168 -156
	CEN	CODI
	CRI	HTN
	IDC	KSI
	MDC	MSC
	SCE	SIEG
		SSI
1N3510	♦APD	169 -195
	CEN	CODI
	CRI	HTN
	IDC	KSI
	MDC	MSC
	SCE	SIEG
		SSI
1N3511	♦APD	171 - 70
	CEN	CODI
	CRI	HTN
	IDC	KSI
	MDC	MSC
	SCE	SIEG
		SSI
1N3512	♦APD	172 -158
	CEN	CODI
	CRI	HTN
	IDC	KSI
	MDC	MSC
	SCE	SIEG
		SSI
1N3513	♦APD	174 -175
	CEN	CODI
	CRI	HTN
	IDC	KSI
	MDC	MSC
	SCE	SIEG
		SSI
1N3514	♦APD	177 -196
	CEN	CODI
	CRI	HTN
	IDC	KSI
	MDC	MSC
	SCE	SIEG
		SSI
1N3516	♦APD	181 -162
	CEN	CODI
	CRI	HTN
	IDC	KSI
	MDC	MSC
	SCE	SIEG
		SSI
1N3517	♦APD	184 -210
	CEN	CODI
	CRI	HTN
	IDC	KSI
	MDC	MSC
	SCE	SIEG
	SPE	SSI
		UPI
1N3518	♦APD	187 - 36
	CEN	CODI
	CRI	HTN
	IDC	KSI
	MDC	MSC
	SCE	SIEG
	SPE	SSI
1N3519	♦APD	188 -191
	CEN	CODI
	CRI	HTN
	IDC	KSI
	MDC	MSC
	SCE	SIEG
		SSI
1N3520	♦APD	190 -153
	CEN	CODI
	CRI	HTN
cont.next col.		
1N3520		
(cont.)		IDC
	KSI	MDC
	MSC	SCE
	SIEG	SSI
1N3521	♦APD	192 -125
	CEN	CODI
	CRI	HTN
	IDC	KSI
	MDC	MSC
	SCE	SIEG
		SSI
1N3522	♦APD	194 -149
	CEN	CODI
	CRI	HTN
	IDC	KSI
	MDC	MSC
	SCE	SIEG
		SSI
1N3523	♦APD	196 - 54
	CEN	CODI
	CRI	HTN
	IDC	KSI
	MDC	MSC
	SCE	SIEG
		SSI
1N3524	♦APD	198 - 61
	CEN	CODI
	CRI	HTN
	IDC	KSI
	MDC	MSC
	SCE	SIEG
		SSI
1N3525	♦APD	200 - 61
	CEN	CODI
	CRI	HTN
	IDC	KSI
	MDC	MSC
	SCE	SIEG
		SSI
1N3526	♦APD	201 -166
	CEN	CRI
	HTN	IDC
	KSI	MDC
	MSC	SCE
	SIEG	SSI
		WAB
1N3527	♦APD	203 - 67
	CEN	CRI
	HTN	IDC
	KSI	MDC
	MSC	SCE
	SIEG	SSI
1N3528	♦APD	205 - 1
	CEN	CRI
	HTN	IDC
	KSI	MDC
	MSC	SCE
	SIEG	SSI
		WAB
1N3529	♦APD	206 -134
	CEN	CRI
	HTN	IDC
	KSI	MDC
	MSC	SCE
	SIEG	SSI
		THEF
1N3530	♦APD	208 - 22
	CEN	CRI
	HTN	IDC
	KSI	MDC
	MSC	SCE
	SIEG	SSI
1N3531	CEN	209 -107
	CRI	HTN
	IDC	MDC
	MSC	SCE
	SIEG	SSI
1N3532	CEN	210 -144
	CRI	HTN
	IDC	MDC
	MSC	SCE
	SIEG	SSI
1N3533	CEN	211 -164
	CRI	HTN
	IDC	MDC
	MSC	SCE
	SIEG	SSI
1N3534	CEN	212 -176
	CRI	HTN
	IDC	MDC
	MSC	SCE
	SIEG	SSI
1N3537	HTN	191 - 83
	IDC	SSI
1N3544	CEN	277 - 90
	CRI	STI
1N3545	CEN	277 -105
	CRI	UPI
1N3546	CEN	277 -120
	CRI	STI
		UPI
1N3547	CEN	277 -130
	CRI	STI
		UPI
1N3548	CEN	277 -148
	CRI	IDC
		STI
1N3549	CEN	277 -158
	CRI	STI
1N3550	CEN	248 -114
	CRI	IDC
	MSC	SCE
cont.next page		

Δ-Registered with JEDEC by this manufacturer

♦-Mfr's data sheet available in microfilm service

1. TYPE No. CROSS INDEX

IN TYPE NUMBER SEQUENCE

TYPE No.	MFRS	Pg&Line
1N3550		
(cont.)	SPE	
SSI	SSY	
	STI	
1N3553	CODI	176 - 18
CRI	IDC	
MSC	UPI	
1N3558	CODI	435 - 62
1N3559	CEI	232 - 27
CEN	CRI	
IDC	SSY	
	UPI	
1N3563	CEN	401 - 78
CRI	EDL	
SCN	SPE	
1N3564	CEI	231 -166
CEN	CRI	
IDC	SSY	
	UPI	
1N3565	ASI	285 -194
CEN	CRI	
EDL	SCN	
SOD	SPE	
	UPI	
1N3566	CRI	282 - 98
1N3567	ΔTRWS	246 - 63
CRI	SSI	
1N3568	CRI	246 -177
1N3569	ASI	289 -181
CEN	CRI	
EDL	ETC	
HSE	HTN	
IDC	♦MAL	
SAR	♦SCN	
SOD	SSI	
	UPI	
1N3570	ASI	289 -188
CEN	CRI	
EDL	ETC	
HSE	HTN	
♦MAL	SAR	
SCN	SOD	
SPE	SSI	
	UPI	
1N3571	ASI	289 -191
CEN	CRI	
EDL	ETC	
HSE	HTN	
♦MAL	SAR	
♦SCN	SOD	
SPE	SSI	
	UPI	
1N3572	ASI	289 -196
CEN	CRI	
EDL	ETC	
HSE	HTN	
IDC	♦MAL	
SAR	♦SCN	
SOD	SSI	
	UPI	
1N3573	ASI	289 -198
CEN	CRI	
EDL	ETC	
HSE	HTN	
IDC	♦MAL	
SAR	♦SCN	
SOD	SSI	
1N3574	ASI	289 -202
CEN	CRI	
EDL	ETC	
HSE	HTN	
IDC	♦MAL	
SAR	♦SCN	
SOD	SSI	
	WAB	
1N3575	CEN	235 - 5
CRI	MSC	
UPI	WAB	
1N3576	ASI	235 - 6
CEN	CRI	
HTN	MSC	
	WAB	
1N3577	CEN	235 - 7
CRI	HTN	
	MSC	
1N3578	CEN	235 - 8
CRI	HTN	
IDC	MSC	
1N3579	CRI	235 - 9
	MSC	
1N3580	CRI	190 - 63
GSE	HTN	
IDC	SCE	
SPE	SSI	
	WAB	
1N3580A	GSE	190 - 64
HTN	SCE	
	SSI	
1N3580B	GSE	190 - 65
HTN	SCE	
SSI	WAB	
1N3581	CRI	190 - 66
GSE	HTN	
IDC	SCE	
	SPE	
1N3581A	GSE	190 - 67
HTN	SCE	
1N3581B	GSE	190 - 68
HTN	SCE	
1N3582	CRI	190 - 69
GSE	HTN	
IDC	SCE	
SPE	SSI	

TYPE No.	MFRS	Pg&Line
1N3582A	GSE	190 - 70
HTN	SCE	
	SSI	
1N3582B	GSE	190 - 71
HTN	SCE	
	SSI	
1N3583	CRI	190 - 72
GSE	HTN	
IDC	SCE	
	SSI	
1N3583A	GSE	190 - 73
HTN	SCE	
	SSI	
1N3583B	GSE	190 - 74
HTN	SCE	
	SSI	
1N3584	CRI	190 - 75
GSE	HTN	
IDC	SCE	
	SSI	
1N3584A	GSE	190 - 76
HTN	SCE	
	SSI	
1N3584B	GSE	190 - 77
HTN	SCE	
	SSI	
1N3585	CRI	310 -190
HTN	SSI	
1N3586	CRI	310 -193
HTN	SSI	
1N3587	CRI	310 -200
HTN	SSI	
1N3588	CRI	310 -213
HTN	SSI	
1N3589	CRI	311 - 1
HTN	SSI	
1N3590	CRI	311 - 14
HTN	SSI	
1N3591	CRI	311 - 22
HTN	SSI	
1N3592	CRI	241 - 66
HTN	IDC	
MISI	SCE	
SLD	SPE	
SSI	SST	
STI	THEF	
	UPI	
1N3593	CEN	245 -102
CRI	HTN	
	IDC	
1N3594	CEN	246 - 35
CRI	HTN	
IDC	♦MSC	
1N3595	Δ♦FSC	235 - 73
APD	ASI	
CODI	CRI	
ETC	HTN	
IDC	♦MSC	
SCE	SPE	
SPR	SSI	
THEF	UPI	
	WAB	
1N3596	CEN	244 -152
CRI	IDC	
MSC	SCE	
	SSI	
1N3597	CEN	251 -156
CRI	IDC	
MSC	SSI	
1N3598	CEN	245 -155
CRI	IDC	
MSC	SCE	
SPE	SSI	
1N3599	CEN	249 - 85
CRI	SCE	
SSI	STI	
1N3600	Δ♦FSC	251 - 93
♦APD	ASI	
CEN	CRI	
HTN	IDC	
MDC	MSC	
RHM	SCE	
SPE	SPR	
SSI	SSY	
STI	THEF	
♦UNI	WAB	
1N3601	CEN	246 -136
CRI	IDC	
MSC	STI	
1N3602	♦APD	245 -188
CEN	CRI	
IDC	MSC	
SPE	STI	
1N3603	CEN	245 - 9
CRI	IDC	
	MSC	
1N3604	ASI	246 -104
CEN	CRI	
FSC	HTN	
IDC	MDC	
♦MSC	RHM	
SCE	SLD	
SPE	SST	
SSY	STI	
THEF	WAB	
1N3605	♦APD	245 - 74
ASI	CEN	
CRI	HTN	
IDC	MDC	
♦MSC	RHM	
SCE	SLD	
SPE	SST	
SSY	STI	
THEF	WAB	

TYPE No.	MFRS	Pg&Line
1N3606	ASI	246 -105
CEN	CRI	
HTN	IDC	
MDC	MSC	
RHM	SCE	
SLD	SST	
STI	THEF	
	WAB	
1N3607	CRI	246 -106
IDC	SCE	
1N3608	CRI	245 - 75
	IDC	
1N3609	CRI	246 -107
1N3611	Δ♦UNI	237 - 60
ASI	CDIL	
CEN	CRI	
EDL	♦GIC	
HTN	MSC	
SLD	SPE	
SSI	SST	
TRWS	UPI	
	WAB	
1N3612	Δ♦UNI	237 - 61
ASI	CDIL	
CEN	CRI	
EDL	♦GIC	
HTN	MSC	
SLD	SPE	
SSI	SST	
TRWS	UPI	
	WAB	
1N3613	Δ♦UNI	237 - 62
CDIL	CEN	
CRI	EDL	
♦GIC	HTN	
MSC	SLD	
SSI	SST	
	TRWS	
1N3614	Δ♦UNI	237 - 63
CDIL	CEN	
CRI	EDL	
♦GIC	HTN	
MSC	SSI	
	TRWS	
1N3615	ASI	296 -188
CEN	COO	
CRI	EDL	
ETC	GTC	
HTN	IDC	
IDI	PRX	
SAR	SCN	
♦SSEI	SSI	
UPI	WAB	
1N3616	ASI	296 -201
CEN	COO	
CRI	EDL	
ETC	GTC	
HTN	IDC	
IDI	PRX	
SAR	SCN	
SPE	♦SSEI	
SSI	SST	
TIC	UPI	
	WAB	
1N3617	ASI	296 -208
CEI	CEN	
COO	CRI	
EDL	ETC	
GTC	HTN	
IDC	IDI	
PRX	SAR	
SCN	SSI	
SST	UPI	
	WAB	
1N3618	ASI	296 -216
CEI	CEN	
COO	CRI	
EDL	ETC	
GTC	HTN	
IDC	IDI	
PRX	SAR	
SCN	SPE	
♦SSEI	SSI	
SST	UPI	
	WAB	
1N3619	ASI	297 - 2
CEI	CEN	
COO	CRI	
EDL	GTC	
HTN	IDC	
IDI	PRX	
SAR	SCN	
SSI	SST	
UPI	WAB	
1N3620	ASI	297 - 13
CEI	CEN	
♦COO	CRI	
EDL	ETC	
GTC	HTN	
IDC	IDI	
PRX	SAR	
SCN	♦SSEI	
SSI	SST	
UPI	WAB	
1N3621	ASI	297 - 18
CEI	CEN	
COO	CRI	
EDL	ETC	
GTC	HTN	
IDC	IDI	
PRX	SAR	
SCN	SSI	
SST	WAB	

TYPE No.	MFRS	Pg&Line
1N3622	ASI	297 - 29
CEI	CEN	
♦COO	CRI	
EDL	ETC	
GTC	HTN	
IDC	IDI	
PRX	SAR	
SCN	SPE	
♦SSEI	SSI	
SST	WAB	
1N3623	ASI	297 - 44
CEI	CEN	
♦COO	CRI	
EDL	ETC	
GTC	HTN	
IDC	IDI	
PRX	SCN	
♦SSEI	SSI	
SST	WAB	
1N3624	ASI	403 -102
CEI	CEN	
♦COO	CRI	
EDL	ETC	
GTC	HTN	
IDI	PRX	
SCN	♦SSEI	
SSI	SST	
	WAB	
1N3625	CEN	243 - 69
CRI	IDC	
	SSI	
1N3626	CEI	231 - 92
CEN	CRI	
	♦IDC	
1N3629	CRI	278 - 4
	SSI	
1N3630	CRI	278 - 42
1N3631	CRI	278 - 90
1N3632	CRI	278 -123
1N3633	CRI	278 -165
1N3634	CRI	278 -194
1N3635	CRI	279 - 16
1N3636	CRI	279 - 30
1N3637	CRI	279 - 54
1N3638	CRI	401 -111
1N3639	CEN	278 - 78
CRI	EDL	
HTN	IDI	
SAR	SCN	
SPE	SSI	
	UPI	
1N3640	ASI	278 -158
CEN	CRI	
EDL	HTN	
IDI	SAR	
SCN	SPE	
SSI	WAB	
1N3641	CEN	279 - 12
CRI	EDL	
HTN	IDC	
IDI	SAR	
SCN	SSI	
1N3642	CEN	277 - 65
CRI	EDL	
HTN	IDI	
SAR	SCN	
SPE	SSI	
1N3643	♦CODI	232 - 45
CRI	HTN	256 - 70
♦MSC	SCN	
♦SSI	UNI	
1N3644	♦CODI	232 - 46
CRI	HTN	256 -117
MSC	SCN	
♦SSI	UNI	
	UPI	
1N3645	♦CODI	232 - 47
CRI	HTN	256 -145
MSC	SCN	
♦SSI	UNI	
	UPI	
1N3646	♦CODI	232 - 48
CRI	HTN	256 -165
MSC	SCN	
♦SSI	UNI	
	UPI	
1N3647	♦CODI	232 - 49
CRI	HTN	256 -182
MSC	SCN	
SET	♦SSI	
UNI	UPI	
1N3648	CRI	427 - 96
1N3649	ASI	282 - 99
CEN	CRI	
EDL	ETC	
HTN	IDC	
SCN	SOD	
	SSI	
1N3650	ASI	402 - 9
CEN	CRI	
EDL	ETC	
HTN	IDC	
SCN	SOD	
	SSI	
1N3653	CRI	243 - 17
IDC	MDC	
MSC	SLD	
SPE	SST	
	STR	
1N3654	CEN	243 - 18
CRI	IDC	
MSC	SCE	
SLD	SST	

TYPE No.	MFRS	Pg&Line
1N3656	ΔUNI	278 - 43
CRI	MSC	
TRWS	UPI	
1N3657	Δ♦UNI	278 -124
CRI	MSC	
TRWS	UPI	
1N3658	Δ♦UNI	278 -195
CRI	MSC	
	TRWS	
1N3659	CEN	300 - 20
CRI	♦DIT	
MAL	♦MOTA	
SAR	SCN	
SLD	SST	
	TIC	
1N3660	CEN	300 - 51
CRI	MAL	
♦MOTA	SAR	
SCN	SLD	
SPE	SST	
1N3661	CEN	300 - 84
CRI	MAL	
♦MOTA	SAR	
SCN	SLD	
SPE	SST	
1N3662	CEN	300 -103
CRI	MAL	
♦MOTA	SAR	
SCN	SLD	
SPE	SST	
1N3663	CEN	300 -126
CRI	MAL	
♦MOTA	SAR	
SCN	SLD	
SPE	SST	
1N3664	CEN	300 -135
CRI	MAL	
SAR	SCN	
1N3665	CEN	300 -147
CRI	MAL	
SAR	SCN	
	UPI	
1N3666	ASI	249 - 51
CEN	CRI	
IDC	♦ITTG	
MDC	SLD	
SPE	SST	
SSY	STI	
UPI	WAB	
1N3667	CRI	284 -167
1N3668	CEN	242 -175
CRI	DIT	
IDC	MSC	
1N3669	CRI	251 -129
IDC	MSC	
SCE	SSI	
	SSY	
1N3670	ΔPRX	295 -143
ASI	CEI	
CEN	COO	
CRI	DII	
EDL	ETC	
GTC	HSE	
HTN	IDC	
IDI	SCN	
SSI	SST	
UPI	WAB	
1N3670A	ΔPRX	255 -156
ASI	CDIL	
CEI	CEN	
COO	♦DII	
EDL	ETC	
GTC	HSE	
HTN	IDC	
IDI	INR	
INRJ	♦NAT	
SCN	♦SSI	
SST	WAB	
1N3671	ΔPRX	295 -160
ASI	CEI	
CEN	♦COO	
CRI	DII	
EDL	ETC	
GTC	HSE	
HTN	IDC	
IDI	INRJ	
SCN	♦SSEI	
SSI	SST	
UPI	WAB	
1N3671A	ΔPRX	255 -217
ASI	CDIL	
CEI	CEN	
♦COO	♦DII	
EDL	ETC	
GTC	HSE	
HTN	IDI	
INR	INRJ	
♦NAT	SCN	
SPE	♦SSEI	
♦SSI	SST	
	WAB	
1N3672	ΔPRX	295 -177
ASI	CEI	
CEN	COO	
CRI	DII	
EDL	ETC	
♦GESY	GTC	
HSE	HTN	
IDC	IDI	
INRJ	SCN	
SSI	SST	
STR	UPI	
	WAB	

Δ-Registered with JEDEC by this manufacturer

♦-Mfr's data sheet available in microfilm service

1. TYPE No. CROSS INDEX

IN TYPE NUMBER SEQUENCE

TYPE No.	MFRS	Pg&Line
1N3672A	ΔPRX	256 - 8
ASI	CDIL	
CEI	CEN	
COO	♦DII	
DIT	EDL	
ETC	GESY	
GTC	HSE	
HTN	IDI	
INR	INRJ	
♦NAT	SCN	
♦SSI	SST	
STR	WAB	
1N3673	ΔPRX	403 - 62
ASI	CEI	
CEN	♦COO	
CRI	DII	
EDL	ETC	
GTC	HSE	
HTN	IDC	
IDI	INR	
INRJ	SCN	
SPE	♦SSEI	
SSI	SST	
STR	UPI	
	WAB	
1N3673A	ΔPRX	256 - 71
ASI	CDIL	
CEI	CEN	
♦COO	♦DII	
DIT	EDL	
ETC	GTC	
HSE	HTN	
IDC	IDI	
INR	INRJ	
♦NAT	SCN	
SPE	♦SSEI	
♦SSI	SST	
STR	WAB	
1N3675	♦APD	178 - 81
ASI	CEN	
CRI	MSC	
SCE	SCN	
1N3675A	APD	178 - 79
CEN	SCE	
	SCN	
1N3675B	APD	178 - 71
CEN	SCE	
SCN	SPE	
1N3676	♦APD	180 - 75
ASI	CEN	
CRI	IDC	
MSC	SCE	
	SCN	
1N3676A	APD	180 - 73
CEN	IDC	
MSC	SCE	
	SCN	
1N3676B	APD	180 - 66
CEN	IDC	
MSC	SCE	
	SCN	
1N3677	♦APD	182 - 59
ASI	CEN	
CRI	IDC	
MSC	SCE	
	SCN	
1N3677A	APD	182 - 57
CEN	IDC	
MSC	SCE	
	SCN	
1N3677B	APD	182 - 49
CEN	IDC	
SCE	SCN	
1N3678	♦APD	185 - 93
ASI	CEN	
CRI	IDC	
SCE	SCN	
	SPE	
1N3678A	APD	185 - 91
CEN	IDC	
MSC	SCE	
	SCN	
1N3678B	APD	185 - 84
CEN	IDC	
SCE	SCN	
1N3679	♦APD	187 -144
ASI	CEN	
CRI	IDC	
MSC	SCE	
	SCN	
1N3679A	APD	187 -142
CEN	IDC	
SCE	SCN	
1N3679B	APD	187 -134
CEN	IDC	
MSC	SCE	
	SCN	
1N3680	♦APD	189 - 66
CEN	CRI	
IDC	MSC	
SCE	SCN	
1N3680A	APD	189 - 65
CEN	IDC	
MSC	SCE	
	SCN	
1N3680B	APD	189 - 61
CEN	IDC	
SCE	SCN	
1N3681	♦APD	191 - 29
CEN	CRI	
IDC	MSC	
SCE	SCN	
	SPE	

TYPE No.	MFRS	Pg&Line
1N3681A	APD	191 - 28
CEN	IDC	
SCE	SCN	
1N3681B	APD	191 - 22
CEN	IDC	
MSC	SCE	
	SCN	
1N3682	♦APD	192 -199
CEN	CRI	
IDC	MSC	
SCE	SCN	
1N3682A	APD	192 -198
CEN	IDC	
SCE	SCN	
1N3682B	APD	192 -195
CEN	IDC	
SCE	SCN	
1N3683	♦APD	195 - 31
CEN	CRI	
IDC	MSC	
SCE	SCN	
	WAB	
1N3683A	APD	195 - 30
CEN	IDC	
SCE	SCN	
1N3683B	APD	195 - 26
CEN	IDC	
SCE	SCN	
	SPE	
1N3684	♦APD	196 -129
CEN	CRI	
IDC	MSC	
SCE	SCN	
	SPE	
1N3684A	APD	196 -128
CEN	IDC	
SCE	SCN	
1N3684B	APD	196 -125
CEN	IDC	
MSC	SCE	
	SCN	
1N3685	♦APD	198 -141
CEN	CRI	
IDC	MSC	
SCE	SCN	
1N3685A	APD	198 -140
CEN	IDC	
MSC	SCE	
	SCN	
1N3685B	APD	198 -136
CEN	IDC	
MSC	SCE	
	SCN	
1N3686	CEN	200 -135
CRI	IDC	
MSC	SCE	
SCN	SPE	
1N3686A	CEN	200 -134
IDC	MSC	
SCE	SCN	
	SPE	
1N3686B	CEN	200 -131
IDC	SCE	
SCN	SPE	
1N3687	♦APD	202 - 34
CEN	CRI	
MSC	SCE	
	SCN	
1N3687A	APD	202 - 33
CEN	MSC	
SCE	SCN	
1N3687B	APD	202 - 29
CEN	MSC	
SCE	SCN	
1N3688	♦APD	203 -136
CEN	CRI	
MSC	SCE	
	SCN	
1N3688A	APD	203 -135
CEN	SCE	
SCN	SPE	
	WAB	
1N3688B	APD	203 -132
CEN	SCE	
	SCN	
1N3689	♦APD	205 - 71
CEN	CRI	
IDC	MSC	
SCE	SCN	
1N3689A	APD	205 - 70
CEN	IDC	
SCE	SCN	
1N3689B	APD	205 - 66
CEN	IDC	
MSC	SCE	
	SCN	
1N3690	♦APD	206 -206
CEN	CRI	
MSC	SCE	
	SCN	
1N3690A	APD	206 -205
CEN	MSC	
SCE	SCN	
1N3690B	APD	206 -202
CEN	MSC	
SCE	SCN	
1N3691	♦APD	208 - 94
CEN	CRI	
IDC	MSC	
SCE	SCN	
1N3691A	APD	208 - 93
CEN	IDC	
MSC	SCE	
	SCN	

TYPE No.	MFRS	Pg&Line
1N3691B	APD	208 - 90
CEN	IDC	
SCE	SCN	
1N3692	CEN	209 -162
CRI	IDC	
MSC	SCE	
	SCN	
1N3692A	CEN	209 -161
IDC	SCE	
	SCN	
1N3692B	CEN	209 -158
IDC	MSC	
SCE	SCN	
	SPE	
1N3693	CEN	210 -199
CRI	IDC	
MSC	SCE	
	SCN	
1N3693A	CEN	210 -198
IDC	MSC	
SCE	SCN	
1N3693B	CEN	210 -195
IDC	MSC	
SCE	SCN	
1N3694	CEN	212 - 12
CRI	IDC	
MSC	SCE	
	SCN	
1N3694A	CEN	212 - 11
IDC	MSC	
SCE	SCN	
1N3694B	CEN	212 - 8
IDC	SCE	
	SCN	
1N3695	CEN	213 - 26
CRI	SCE	
	SCN	
1N3695A	CEN	213 - 25
MSC	SCE	
	SCN	
1N3695B	CEN	213 - 22
MSC	SCE	
	SCN	
1N3696	CEN	214 - 26
CRI	IDC	
MSC	SCE	
SCN	SPE	
1N3696A	CEN	214 - 25
IDC	MSC	
SCE	SCN	
1N3696B	CEN	214 - 24
IDC	MSC	
SCE	SCN	
1N3697	CEN	215 - 11
CRI	IDC	
MSC	SCE	
	SCN	
1N3697A	CEN	215 - 10
DII	IDC	
SCE	SCN	
1N3697B	CEN	215 - 9
IDC	SCE	
	SCN	
1N3698	CEN	216 - 18
CRI	IDC	
MSC	SCE	
	SCN	
1N3698A	CEN	216 - 17
IDC	MSC	
SCE	SCN	
1N3698B	CEN	216 - 16
IDC	SCE	
	SCN	
1N3699	CEN	216 -193
CRI	IDC	
MSC	SCE	
SCN	SPE	
1N3699A	CEN	216 -192
IDC	MSC	
SCE	SCN	
1N3699B	CEN	216 -191
IDC	SCE	
	SCN	
1N3700	CEN	217 -181
CRI	IDC	
SCE	SCN	
1N3700A	CEN	217 -180
IDC	SCE	
	SCN	
1N3700B	CEN	217 -178
IDC	SCE	
	SCN	
1N3701	CEN	218 -161
CRI	IDC	
SCE	SCN	
1N3701A	CEN	218 -160
IDC	SCE	
	SCN	
1N3701B	CEN	218 -159
IDC	MSC	
SCE	SCN	
1N3702	CEN	219 -144
CRI	IDC	
SCE	SCN	
1N3702A	CEN	219 -143
IDC	MSC	
SCE	SCN	
1N3702B	CEN	219 -142
IDC	SCE	
	SCN	
1N3703	CEN	220 -100
CRI	IDC	
MSC	SCE	
	SCN	

TYPE No.	MFRS	Pg&Line
1N3703A	CEN	220 - 99
IDC	MSC	
SCE	SCN	
1N3703B	CEN	220 - 98
IDC	MSC	
SCE	SCN	
1N3704	CEN	221 - 66
CRI	IDC	
MSC	SCE	
	SCN	
1N3704A	CEN	221 - 65
IDC	SCE	
	SCN	
1N3704B	CEN	221 - 64
IDC	SCE	
	SCN	
1N3705	CEN	222 - 17
CRI	IDC	
MSC	SCE	
	SCN	
1N3705A	CEN	222 - 16
IDC	MSC	
SCE	SCN	
1N3705B	CEN	222 - 15
IDC	MSC	
SCE	SCN	
1N3706	CEN	222 -161
CRI	IDC	
MSC	SCE	
	SCN	
1N3706A	CEN	222 -160
IDC	SCE	
	SCN	
1N3706B	CEN	222 -159
IDC	SCE	
	SCN	
1N3707	CEN	224 - 5
CRI	IDC	
SCE	SCN	
1N3707A	CEN	224 - 4
IDC	MSC	
SCE	SCN	
1N3707B	CEN	224 - 3
IDC	MSC	
SCE	SCN	
1N3708	CEN	224 -139
CRI	IDC	
SCE	SCN	
1N3708A	CEN	224 -138
IDC	SCE	
	SCN	
1N3708B	CEN	224 -137
IDC	SCE	
	SCN	
1N3709	CEN	225 -144
CRI	MSC	
SCE	SCN	
1N3709A	CEN	225 -143
SCE	SCN	
1N3709B	CEN	225 -142
MSC	SCE	
	SCN	
1N3710	CEN	226 -148
CRI	MSC	
SCE	SCN	
	SPE	
1N3710A	CEN	226 -147
SCE	SCN	
1N3710B	CEN	226 -146
SCE	SCN	
1N3711	♦CODI	424 -159
	CRI	
1N3722	CRI	245 -210
IDC	♦MSC	
1N3723	CRI	401 -122
1N3724	CRI	406 - 23
1N3725	CRI	409 - 66
1N3726	CRI	412 - 33
1N3727	CRI	413 -209
1N3728	ASI	236 - 3
CEN	CRI	
SPE	SSI	
UPI	WAB	
1N3729	CRI	243 - 98
IDC	SSI	
1N3730	CRI	246 -188
IDC	SCE	
	SSI	
1N3731	CEN	247 - 3
CRI	IDC	
MDC	MSC	
SCE	SLD	
SPE	SST	
SSY	STI	
	THEF	
1N3732	CRI	171 -170
IDC	MSC	
	SPE	
1N3735	CEN	309 -106
COO	CRI	
♦DIT	EDL	
ETC	HSE	
HTN	IDC	
♦INR	INRJ	
PRX	SAR	
SPE	SSI	
	WAB	
1N3736	CEN	309 -125
COO	CRI	
♦DIT	EDL	
ETC	HSE	
HTN	IDC	
♦INR	INRJ	
cont.next col.		

TYPE No.	MFRS	Pg&Line
1N3736		
(cont.)	PRX	
SAR	SSI	
	WAB	
1N3737	CEN	309 -145
COO	CRI	
♦DIT	EDL	
ETC	HSE	
HTN	IDC	
♦INR	INRJ	
PRX	SAR	
SSI	TIC	
	WAB	
1N3739	ASI	309 -183
CEN	COO	
CRI	♦DIT	
EDL	HTN	
♦INR	INRJ	
PRX	SAR	
SSI	WAB	
1N3740	ASI	309 -199
CEN	COO	
CRI	♦DIT	
EDL	HTN	
♦IDC	♦INR	
INRJ	PRX	
SAR	SPE	
SSI	WAB	
1N3741	ASI	310 - 4
CEN	♦COO	
CRI	♦DIT	
EDL	HTN	
♦IDC	♦INR	
INRJ	PRX	
SPE	SSI	
	WAB	
1N3742	ASI	404 -151
CEN	♦COO	
CRI	♦DIT	
EDL	HTN	
♦INR	INRJ	
PRX	SPE	
SSI	UPI	
	WAB	
1N3743	ASI	408 - 26
CEN	♦COO	
CRI	♦DIT	
EDL	HTN	
♦IDC	♦INR	
INRJ	PRX	
SPE	SSI	
	UPI	
1N3744	CRI	410 - 67
♦DIT	EDL	
HTN	PRX	
	SSI	
1N3748	CEN	276 -184
CRI	EDL	
ETC	UPI	
1N3749	CEN	277 - 4
CRI	EDL	
ETC	UPI	
1N3750	CEN	277 - 44
CRI	EDL	
ETC	SPE	
1N3751	CEN	277 - 66
CRI	EDL	
ETC	SPE	
1N3752	CEN	401 - 94
CRI	EDL	
ETC	SPE	
1N3753	CEN	232 - 22
CRI	IDC	
MDC	UPI	
1N3754	AMX	274 -187
CRI	SPE	
	UTX	
1N3755	AMX	274 -188
ASI	CRI	
IDC	UTX	
	WAB	
1N3756	AMX	274 -189
CRI	SPE	
	UTX	
1N3757	CEN	280 -183
CRI	EDL	
ETC	IDC	
SPE	UPI	
1N3758	CEN	281 - 87
CRI	EDL	
ETC	UPI	
1N3759	ASI	281 -203
CEN	CRI	
EDL	ETC	
	WAB	
1N3760	CEN	282 - 69
CRI	EDL	
	IDC	
1N3761	CEN	401 -200
CRI	EDL	
	ETC	
1N3762	CRI	425 -136
1N3763	CODI	201 - 8
CRI	IDC	
MSC	SIEG	

Δ-Registered with JEDEC by this manufacturer

♦-Mfr's data sheet available in microfilm service

1. TYPE No. CROSS INDEX

IN TYPE NUMBER SEQUENCE

TYPE No.	MFRS	Pg&Line
1N3764	CRI	256 -183
	♦SSI	
	TRWS	
1N3765	Δ♦PRX	255 -157
	ASI	
	CEI	
	CEN	
	COO	
	CRI	♦DII
	EDL	GTC
	HTN	IDC
	IDI	INR
	INRJ	♦NAT
	SCN	SOD
	♦SSI	SST
	UPI	WAB
1N3766	ΔPRX	255 -218
	ASI	CEI
	CEN	♦COO
	CRI	♦DII
	EDL	GTC
	HTN	IDC
	IDI	INR
	INRJ	♦NAT
	SCN	SOD
	SPE	♦SSEI
	♦SSI	SST
	THEF	TIC
	UPI	WAB
1N3767	ΔPRX	256 - 9
	ASI	CEI
	CEN	COO
	CRI	♦DII
	EDL	GTC
	HTN	IDC
	IDI	INR
	INRJ	♦NAT
	SCN	SOD
	♦SSI	SST
	UPI	WAB
1N3768	ΔPRX	256 - 72
	ASI	CEI
	CEN	♦COO
	CRI	♦DII
	EDL	GTC
	HTN	IDC
	IDI	INR
	INRJ	♦NAT
	SCN	SOD
	SPE	♦SSEI
	♦SSI	SST
	THEF	TIC
	UPI	WAB
1N3769	CEI	231 -149
	CEN	CRI
	IDC	MDC
		STI
1N3773	CRI	241 - 64
	IDC	♦ITTG
	SLD	SPE
	SSI	SST
		STI
1N3774	CRI	163 - 53
		IDC
1N3775	CEN	411 -106
	CRI	EDL
	SCN	SOD
		SSI
1N3776	CRI	381 -101
1N3777	CRI	301 - 38
	IDC	MIC
	SSI	SST
1N3779	♦APD	176 -215
	CDI	CODI
	CRI	GSE
	IDC	MSC
	SIEG	SSI
1N3780	♦APD	176 -216
	CDI	CODI
	CRI	GSE
	IDC	MSC
	SIEG	SSI
1N3781	♦APD	176 -217
	CDI	CODI
	CRI	GSE
	IDC	MSC
	SIEG	SSI
1N3782	♦APD	176 -218
	CDI	CODI
	CRI	GSE
	IDC	MSC
	SIEG	SSI
1N3783	♦APD	176 -219
	CDI	CODI
	CRI	GSE
	IDC	MSC
	SIEG	SSI
		UPI
1N3784	♦APD	177 - 1
	CDI	CODI
	CRI	GSE
	IDC	MSC
	SIEG	SSI
1N3785	CRI	178 -166
	ETC	SCE
	SPE	STI
		UTX
1N3785A	Δ♦MOTA	178 -164
	ETC	SCE
	STI	UTX
1N3785B	Δ♦MOTA	178 -158
	ETC	SCE
	SPE	STI
		UTX
1N3786	CRI	180 -158
	ETC	SCE
	STI	UTX
1N3786A	Δ♦MOTA	180 -156
	ETC	SCE
	STI	UTX
1N3786B	Δ♦MOTA	180 -150
	ETC	SCE
	STI	UTX
1N3787	CRI	182 -147
	ETC	SCE
	SPE	STI
		UTX
1N3787A	Δ♦MOTA	182 -145
	ETC	SCE
	STI	UTX
1N3787B	Δ♦MOTA	182 -139
	ETC	SCE
	STI	UTX
1N3788	CRI	185 -181
	ETC	SCE
	STI	UTX
1N3788A	Δ♦MOTA	185 -178
	ETC	SCE
	STI	UTX
1N3788B	Δ♦MOTA	185 -171
	ETC	SCE
	SPE	STI
		UTX
1N3789	CRI	188 - 45
	ETC	SCE
	STI	UTX
1N3789A	Δ♦MOTA	188 - 42
	ETC	SCE
	STI	UTX
1N3789B	Δ♦MOTA	188 - 32
	ETC	SCE
	STI	UTX
1N3790	CRI	189 -158
	ETC	SCE
	SPE	STI
		UTX
1N3790A	Δ♦MOTA	189 -155
	ETC	SCE
	STI	UTX
1N3790B	Δ♦MOTA	189 -146
	ETC	SCE
	STI	UTX
1N3791	CRI	191 -133
	ETC	SCE
	SPE	STI
		UTX
1N3791A	Δ♦MOTA	191 -130
	ETC	SCE
	SPE	STI
		UTX
1N3791B	Δ♦MOTA	191 -121
	ETC	SCE
	SPE	STI
		UTX
1N3792	CRI	193 - 75
	ETC	SCE
	STI	UTX
		WAB
1N3792A	ETC	193 - 72
	♦MOTA	SCE
	STI	UTX
1N3792B	ETC	193 - 63
	♦MOTA	SCE
	STI	UTX
1N3793	CRI	195 -130
	ETC	SCE
	STI	UTX
1N3793A	ETC	195 -127
	♦MOTA	SCE
	STI	UTX
1N3793B	ETC	195 -118
	♦MOTA	SCE
	STI	UTX
1N3794	CRI	197 - 12
	ETC	SCE
	SPE	STI
		UTX
1N3794A	ETC	197 - 9
	♦MOTA	SCE
	STI	UTX
1N3794B	ETC	197 - 1
	♦MOTA	SCE
	STI	UTX
1N3795	CRI	199 - 28
	ETC	SCE
	SPE	STI
		UTX
1N3795A	ETC	199 - 25
	♦MOTA	SCE
	STI	UTX
1N3795B	ETC	199 - 17
	♦MOTA	SCE
	STI	UTX
1N3796	CRI	201 - 21
	ETC	SCE
	SPE	STI
		UTX
1N3796A	ETC	201 - 18
	♦MOTA	SCE
	STI	UTX
1N3796B	ETC	201 - 9
	♦MOTA	SCE
	STI	UPI
		UTX
1N3797	ETC	202 -128
	SCE	STI
		UTX
1N3797A	ETC	202 -125
	♦MOTA	SCE
	STI	UTX
1N3797B	ETC	202 -117
	♦MOTA	SCE
	STI	UTX
1N3798	ETC	204 - 14
	SCE	STI
		UTX
1N3798A	ETC	204 - 11
	♦MOTA	SCE
	STI	UTX
1N3798B	ETC	204 - 3
	♦MOTA	SCE
	SPE	STI
		UTX
1N3799	ETC	205 -168
	SCE	STI
		UTX
1N3799A	ETC	205 -165
	♦MOTA	SCE
	STI	UTX
1N3799B	ETC	205 -155
	♦MOTA	SCE
	SPE	STI
		UTX
1N3800	ETC	207 - 92
	SCE	STI
		UTX
1N3800A	ETC	207 - 89
	♦MOTA	SCE
	SPE	STI
		UTX
1N3800B	ETC	207 - 79
	♦MOTA	SCE
	SPE	STI
		UTX
1N3801	ETC	208 -185
	SCE	STI
		UTX
1N3801A	ETC	208 -182
	♦MOTA	SCE
	SPE	STI
		UTX
1N3801B	ETC	208 -172
	♦MOTA	SCE
	STI	UTX
1N3802	ETC	210 - 34
	SCE	STI
		UTX
1N3802A	Δ♦MOTA	210 - 31
	ETC	SCE
	STI	UTX
1N3802B	Δ♦MOTA	210 - 23
	ETC	SCE
	STI	UTX
1N3803	ETC	211 - 71
	SCE	SPE
	STI	UTX
1N3803A	Δ♦MOTA	211 - 68
	ETC	SCE
	SPE	STI
		UTX
1N3803B	Δ♦MOTA	211 - 60
	ETC	SCE
	SPE	STI
		UTX
1N3804	ETC	212 - 82
	SCE	STI
		UTX
1N3804A	Δ♦MOTA	212 - 79
	ETC	SCE
	STI	UTX
1N3804B	Δ♦MOTA	212 - 69
	ETC	SCE
	STI	UTX
1N3805	ETC	213 - 99
	SCE	STI
		UTX
1N3805A	Δ♦MOTA	213 - 96
	ETC	SCE
	STI	UTX
1N3805B	Δ♦MOTA	213 - 86
	ETC	SCE
	SPE	STI
		UTX
1N3806	ETC	214 - 92
	SCE	UTX
1N3806A	Δ♦MOTA	214 - 89
	ETC	SCE
		UTX
1N3806B	Δ♦MOTA	214 - 82
	ETC	SCE
		UTX
1N3807	ETC	215 - 81
	SCE	STI
		UTX
1N3807A	Δ♦MOTA	215 - 78
	ETC	SCE
	STI	UTX
1N3807B	Δ♦MOTA	215 - 71
	ETC	SCE
	STI	UTX
1N3808	ETC	216 - 85
	IDC	SCE
	STI	UTX
1N3808A	Δ♦MOTA	216 - 82
	ETC	IDC
	SCE	STI
		UTX
1N3808B	Δ♦MOTA	216 - 75
	ETC	IDC
	SCE	STI
		UTX
1N3809	ETC	217 - 66
	SCE	STI
		UTX
1N3809A	Δ♦MOTA	217 - 63
	ETC	SCE
	STI	UTX
1N3809B	Δ♦MOTA	217 - 56
	ETC	SCE
	STI	UTX
1N3810	ETC	218 - 49
	SCE	STI
		UTX
1N3810A	Δ♦MOTA	218 - 46
	ETC	SCE
	STI	UTX
1N3810B	Δ♦MOTA	218 - 39
	ETC	SCE
	STI	UTX
1N3811	ETC	219 - 25
	SCE	STI
		UTX
1N3811A	Δ♦MOTA	219 - 22
	ETC	SCE
	STI	UTX
1N3811B	Δ♦MOTA	219 - 16
	ETC	SCE
	STI	UTX
1N3812	ETC	220 - 4
	SCE	STI
	UTX	WAB
1N3812A	Δ♦MOTA	220 - 1
	ETC	SCE
	STI	UTX
		WAB
1N3812B	Δ♦MOTA	219 -194
	ETC	SCE
	STI	UTX
		WAB
1N3813	ETC	220 -166
	SCE	STI
		UTX
1N3813A	Δ♦MOTA	220 -163
	ETC	SCE
	SPE	STI
		UTX
1N3813B	Δ♦MOTA	220 -158
	ETC	SCE
	SPE	STI
		UTX
1N3814	ETC	221 -126
	SCE	STI
		UTX
1N3814A	Δ♦MOTA	221 -123
	ETC	SCE
	STI	UTX
1N3814B	Δ♦MOTA	221 -118
	ETC	SCE
	STI	UTX
1N3815	ETC	222 - 80
	SCE	STI
		UTX
1N3815A	Δ♦MOTA	222 - 77
	ETC	SCE
	STI	UTX
1N3815B	Δ♦MOTA	222 - 72
	ETC	SCE
	STI	UTX
1N3816	ETC	223 - 33
	SCE	STI
		UTX
1N3816A	Δ♦MOTA	223 - 30
	ETC	SCE
	STI	UTX
1N3816B	Δ♦MOTA	223 - 25
	ETC	SCE
	STI	UTX
1N3817	ETC	224 - 67
	SCE	SPE
	STI	UTX
1N3817A	Δ♦MOTA	224 - 64
	ETC	SCE
	STI	UTX
1N3817B	Δ♦MOTA	224 - 59
	ETC	SCE
	STI	UTX
1N3818	ETC	225 - 5
	SCE	SPE
	STI	UTX
1N3818A	Δ♦MOTA	225 - 1
	ETC	SCE
	SPE	STI
		UTX
1N3818B	Δ♦MOTA	224 -185
	ETC	SCE
	STI	UTX
1N3819	ETC	226 - 27
	SCE	STI
		UTX
1N3819A	Δ♦MOTA	226 - 23
	ETC	SCE
	SPE	STI
		UTX
1N3819B	Δ♦MOTA	226 - 17
	ETC	SCE
	STI	UTX
1N3820	ETC	227 - 21
	SCE	STI
		UTX
1N3820A	Δ♦MOTA	227 - 17
	ETC	SCE
	STI	UTX
1N3820B	Δ♦MOTA	227 - 11
	ETC	SCE
	STI	UTX
1N3821	CEN	166 - 83
	ETC	♦GSE
cont.next col.		
1N3821		
(cont.)	HTN	
	IDC	♦MOTA
	♦MSC	SCN
	SIEG	SSI
	TRWS	WAB
1N3821A	ETC	166 - 70
	GSE	HTN
	IDC	♦MOTA
	♦MSC	SCN
	♦SIEG	SPE
	SSI	THEF
		TRWS
1N3822	CEN	167 - 51
	ETC	♦GSE
	HTN	IDC
	♦MOTA	♦MSC
	SCN	SIEG
	SSI	TRWS
		WAB
1N3822A	CEN	167 - 35
	ETC	GSE
	HTN	IDC
	♦MOTA	♦MSC
	SCN	♦SIEG
	SPE	SSI
	THEF	TRWS
		WAB
1N3823	CEN	168 - 31
	ETC	♦GSE
	HTN	IDC
	♦MOTA	♦MSC
	SCN	SIEG
	SPE	SSI
		TRWS
1N3823A	CEN	168 - 15
	ETC	GSE
	HTN	IDC
	♦MOTA	♦MSC
	SCN	♦SIEG
	SPE	THEF
		TRWS
1N3824	CEN	169 - 52
	ETC	♦GSE
	HTN	IDC
	♦MOTA	♦MSC
	SCN	SIEG
	SSI	TRWS
		WAB
1N3824A	CEN	169 - 37
	ETC	GSE
	HTN	IDC
	♦MOTA	♦MSC
	SCN	♦SIEG
	SPE	SSI
	THEF	TRWS
		WAB
1N3825	CEN	170 -107
	ETC	♦GSE
	HTN	IDC
	♦MOTA	♦MSC
	SCN	SIEG
	SPE	SSI
		TRWS
1N3825A	CEN	170 - 90
	DIT	ETC
	GSE	HTN
	IDC	♦MOTA
	♦MSC	SCN
	♦SIEG	SPE
	SSI	THEF
		TRWS
1N3826	CEN	171 -189
	DIT	ETC
	♦GSE	HTN
	IDC	♦MOTA
	♦MSC	SCN
	SIEG	SPE
	SSI	TRWS
		WAB
1N3826A	CEN	171 -171
	ETC	GSE
	HTN	IDC
	♦MOTA	♦MSC
	SCN	♦SIEG
	SPE	SSI
	THEF	TRWS
1N3827	CEN	173 - 76
	ETC	♦GSE
	HTN	IDC
	♦MOTA	♦MSC
	SCN	SIEG
	SSI	TRWS
1N3827A	CEN	173 - 55
	ETC	♦GSE
	HTN	IDC
	♦MOTA	♦MSC
	SCN	♦SIEG
	SPE	SSI
	THEF	TRWS
		UPI
1N3828	CEN	175 -139
	ETC	♦GSE
	HTN	IDC
	♦MOTA	♦MSC
	SCN	SIEG
	SSI	TRWS
1N3828A	CEN	175 -117
	ETC	♦GSE
	HTN	IDC
	♦MOTA	♦MSC
	SCN	♦SIEG
	SSI	THEF
cont.next page		

Δ-Registered with JEDEC by this manufacturer

♦-Mfr's data sheet available in microfilm service

1. TYPE No. CROSS INDEX

IN TYPE NUMBER SEQUENCE

TYPE No.	MFRS	Pg&Line
1N3828A		
(cont.)	TRWS	
UPI	WAB	
1N3829	Δ ♦MOTA	178 -129
CEN	ETC	
♦GSE	HTN	
IDC	♦MSC	
SCN	SIEG	
SPE	SSI	
	TRWS	
1N3829A	Δ ♦MOTA	178 - 96
CEN	ETC	
♦GSE	HTN	
IDC	♦MSC	
SCN	♦SIEG	
SPE	SSI	
	TRWS	
1N3830	CEN	180 -121
ETC	♦GSE	
HTN	IDC	
♦MOTA	♦MSC	
SAR	SCN	
SIEG	SPE	
SSI	TRWS	
1N3830A	CEN	180 - 89
ETC	♦GSE	
HTN	IDC	
♦MOTA	♦MSC	
SAR	SCN	
♦SIEG	SPE	
SSI	TRWS	
1N3864	CEN	249 -140
IDC	MSC	
SCE	SSI	
1N3865	CEI	234 - 62
	♦IDC	
1N3866	CEN	280 -181
ETC	IDC	
MSC	SCN	
SSI	UPI	
1N3867	CEN	281 - 85
ETC	MSC	
SCN	SSI	
	UPI	
1N3868	CEN	281 -200
ETC	IDC	
MSC	SCN	
	SSI	
1N3869	ASI	401 - 93
CEN	ETC	
MSC	SCN	
SSI	WAB	
1N3870	CEN	411 - 50
MSC	SCN	
SOD	SPE	
	SSI	
1N3871	♦CODI	417 -127
MSC	SCN	
SOD	SSI	
1N3872	CEN	246 -207
IDC	MSC	
SCE	SLD	
SSI	SST	
	STI	
1N3873	CEN	245 -156
IDC	MSC	
	SSI	
1N3874	AMX	263 - 22
CEN	IDC	
SCN	SPE	
SSI	UTX	
1N3875	AMX	263 - 24
CEN	SCN	
SSI	UTX	
1N3876	AMX	263 - 26
CEN	SCN	
SSI	UTX	
1N3877	AMX	263 - 28
CEN	SCN	
SSI	UTX	
1N3878	AMX	263 - 30
CEN	SCN	
SSI	UTX	
1N3879	ASI	252 -108
CEN	♦COO	
♦DII	EDL	
FERB	GTC	
HTN	IDC	
IDI	♦INR	
INRJ	♦MOTA	
♦MSC	MULB	
♦PHIN	PRX	
RTCF	SCN	
♦SIEG	SLD	
♦SSEI	♦SSI	
SST	♦THEF	
UTX	VALG	
1N3879A	♦MOTA	263 - 55
1N3880	ASI	253 - 75
CEN	♦COO	
♦DII	DIT	
EDL	FERB	
GTC	HTN	
IDC	IDI	
♦INR	INRJ	
♦MOTA	♦MSC	
♦MULB	♦PHIN	
PRX	RTCF	
SCN	♦SIEG	
SLD	♦SSEI	
♦SSI	SST	
♦THEF	TIC	
UTX	♦VALG	
	WAB	

TYPE No.	MFRS	Pg&Line
1N3880A	♦MOTA	263 - 56
1N3881	ASI	254 - 71
CEN	♦COO	
♦DII	EDL	
FERB	GTC	
HTN	IDC	
IDI	♦INR	
INRJ	♦MOTA	
♦MSC	♦MULB	
♦PHIN	PRX	
RTCF	SCN	
♦SIEG	SLD	
SPE	♦SSEI	
♦SSI	SST	
♦THEF	UTX	
	♦VALG	
1N3881A	♦MOTA	263 - 57
1N3882	ASI	254 -135
CEN	♦COO	
♦DII	DIT	
EDL	FERB	
GTC	HTN	
IDC	IDI	
♦INR	INRJ	
♦MOTA	♦MSC	
♦MULB	♦PHIN	
PRX	RTCF	
SCN	♦SIEG	
SLD	♦SSI	
SST	♦THEF	
UTX	♦VALG	
1N3882A	♦MOTA	263 - 58
1N3883	ASI	254 -203
CEN	♦COO	
♦DII	DIT	
EDL	FERB	
GTC	HTN	
IDC	IDI	
♦INR	INRJ	
♦MOTA	♦MSC	
MULB	PHIN	
PRX	RTCF	
SCN	♦SIEG	
SLD	SPE	
♦SSEI	♦SSI	
SST	♦THEF	
UTX	VALG	
	WAB	
1N3883A	♦MOTA	263 - 59
1N3884	AMX	263 - 77
CEN	SCN	
SSI	UTX	
1N3885	AMX	253 - 76
CEN	SCN	
♦SSI	UTX	
1N3886	AMX	254 - 72
CEN	SCN	
♦SSI	UTX	
1N3887	AMX	263 - 84
CEN	SCN	
SSI	UTX	
1N3888	AMX	254 -204
CEN	DIT	
SCN	♦SSI	
	UTX	
1N3889	ASI	252 -109
CEN	♦COO	
♦DII	DIT	
EDL	ETC	
FERB	GTC	
HTN	IDC	
IDI	♦INR	
INRJ	♦MOTA	
♦MSC	♦MULB	
♦PHIN	PRX	
RTCF	SCN	
♦SIEG	SLD	
SPE	♦SSEI	
♦SSI	SST	
♦THEF	UTX	
VALG	WAB	
1N3889A	♦MOTA	263 - 78
1N3890	ASI	253 - 77
CEN	♦COO	
♦DII	DIT	
EDL	ETC	
FERB	GTC	
HTN	IDC	
IDI	♦INR	
INRJ	♦MOTA	
♦MSC	♦MULB	
♦NAT	♦PHIN	
PRX	RTCF	
SCN	♦SIEG	
SLD	SPE	
♦SSEI	♦SSI	
SST	♦THEF	
UTX	♦VALG	
	WAB	
1N3890A	♦MOTA	263 - 80
1N3891	ASI	254 - 73
CEN	♦COO	
♦DII	EDL	
ETC	FERB	
GTC	HTN	
IDC	IDI	
♦INR	INRJ	
♦MOTA	♦MSC	
♦MULB	♦NAT	
♦PHIN	PRX	
RTCF	SCN	
♦SIEG	SLD	
SPE	♦SSEI	

cont.next col.

TYPE No.	MFRS	Pg&Line
1N3891		
(cont.)	♦SSI	
SST	♦THEF	
UTX	♦VALG	
	WAB	
1N3891A	♦MOTA	263 - 82
1N3892	ASI	254 -136
CEN	♦COO	
♦DII	DIT	
EDL	ETC	
FERB	HTN	
IDI	♦INR	
INRJ	♦MOTA	
♦MSC	♦MULB	
♦NAT	♦PHIN	
PRX	RTCF	
SCN	♦SIEG	
SLD	♦SSI	
SST	♦THEF	
UTX	♦VALG	
1N3892A	♦MOTA	263 - 85
1N3893	ASI	254 -205
CEN	♦COO	
♦DII	DIT	
EDL	ETC	
FERB	HTN	
IDI	♦INR	
INRJ	♦MOTA	
♦MSC	♦MULB	
♦NAT	♦PHIN	
PRX	RTCF	
SCN	♦SIEG	
SLD	SPE	
♦SSEI	♦SSI	
SST	♦THEF	
UTX	♦VALG	
1N3893A	♦MOTA	263 - 87
1N3894	CEN	236 -133
	SSI	
1N3895	CEN	236 -130
	SSI	
1N3896	♦APD	163 - 40
CEN	CODI	
	IDC	
1N3897	APD	163 - 86
CEN	CODI	
IDC	SPE	
1N3898	APD	163 -127
CEN	CODI	
	IDC	
1N3899	ASI	263 -131
CEN	♦COO	
DII	DIT	
EDL	ETC	
FERB	GTC	
HSE	HTN	
IDC	IDI	
♦MOTA	MULB	
♦NAT	♦PHIN	
PRX	RTCF	
SCN	♦SIEG	
SLD	SOD	
♦SSEI	♦SSI	
SST	♦THEF	
VALG	WAB	
1N3900	ASI	263 -134
CEN	♦COO	
DII	♦DIT	
EDL	ETC	
FERB	GTC	
HSE	HTN	
IDC	IDI	
♦MOTA	MULB	
♦NAT	♦PHIN	
PRX	RTCF	
SCN	SLD	
SOD	SPE	
♦SSEI	♦SSI	
SST	♦THEF	
	VALG	
1N3901	ASI	263 -137
CEN	♦COO	
DII	DIT	
EDL	ETC	
FERB	GTC	
HSE	HTN	
IDC	IDI	
♦MOTA	MULB	
♦NAT	♦PHIN	
PRX	RTCF	
SCN	♦SIEG	
SLD	SOD	
SPE	♦SSEI	
♦SSI	SST	
♦THEF	VALG	
1N3902	ASI	263 -140
CEN	♦COO	
DII	♦DIT	
EDL	ETC	
FERB	GTC	
HSE	HTN	
IDI	♦MOTA	
MULB	♦NAT	
♦PHIN	PRX	
RTCF	SCN	
♦SIEG	SLD	
SOD	♦SSI	
SST	♦THEF	
	VALG	
1N3903	ASI	263 -143
CEN	♦COO	
DII	♦DIT	
EDL	ETC	

cont.next col.

TYPE No.	MFRS	Pg&Line
1N3903		
(cont.)	FERB	
GTC	HSE	
HTN	IDC	
IDI	♦MOTA	
MULB	♦NAT	
♦PHIN	PRX	
RTCF	SCN	
♦SIEG	SLD	
SOD	♦SSEI	
♦SSI	SST	
♦THEF	VALG	
1N3904	AMX	263 -132
HSE	SSI	
1N3905	AMX	263 -135
HSE	SSI	
1N3906	AMX	263 -138
HSE	SSI	
1N3907	AMX	263 -141
HSE	SSI	
1N3908	AMX	263 -144
HSE	SSI	
1N3909	AMX	252 -110
ASI	CEN	
♦COO	♦DII	
♦DIT	EDL	
ETC	FERB	
GTC	HSE	
HTN	IDC	
IDI	♦MOTA	
MULB	♦NAT	
♦PHIN	PRX	
RTCF	SCN	
SIEG	SLD	
SOD	♦SSEI	
♦SSI	SST	
♦THEF	TIC	
	VALG	
1N3910	ASI	253 - 78
CEN	♦COO	
♦DII	♦DIT	
EDL	ETC	
FERB	GTC	
HSE	HTN	
IDC	IDI	
♦MOTA	MULB	
♦NAT	♦PHIN	
PRX	RTCF	
SCN	SIEG	
SLD	SOD	
SPE	♦SSEI	
♦SSI	SST	
♦THEF	TIC	
	VALG	
1N3911	ASI	254 - 74
CEN	♦COO	
♦DII	♦DIT	
EDL	ETC	
FERB	GTC	
HSE	HTN	
IDC	IDI	
♦MOTA	MULB	
♦NAT	♦PHIN	
PRX	RTCF	
SCN	SIEG	
SLD	SOD	
SPE	♦SSEI	
♦SSI	SST	
♦THEF	VALG	
1N3912	ASI	254 -137
CEN	♦COO	
♦DII	♦DIT	
EDL	ETC	
FERB	GTC	
HSE	HTN	
IDC	IDI	
♦MOTA	MULB	
♦NAT	♦PHIN	
PRX	RTCF	
SCN	SIEG	
SLD	SOD	
♦SSI	SST	
♦THEF	VALG	
1N3913	ASI	254 -206
CEN	♦COO	
♦DII	DIT	
EDL	ETC	
FERB	GTC	
HSE	HTN	
IDC	IDI	
♦MOTA	MULB	
♦NAT	♦PHIN	
PRX	RTCF	
SCN	SIEG	
SLD	SOD	
♦SSEI	♦SSI	
SST	♦THEF	
VALG	WAB	
1N3914	AMX	263 -162
IDC	SSI	
1N3915	AMX	263 -165
	SSI	
1N3916	AMX	263 -171
	SSI	
1N3919	EDL	402 -212
ETC	HSE	
IDC	SCN	
SOD	SSI	
1N3920	EDL	411 -117
SCN	SOD	
	SSI	
1N3921	EDL	415 -101
SCN	SOD	
	SSI	

TYPE No.	MFRS	Pg&Line
1N3922	EDL	417 -187
SCN	SOD	
1N3923	EDL	419 -173
SCN	SOD	
1N3924	EDL	403 - 49
ETC	HSE	
IDC	SCN	
	SST	
1N3925	EDL	411 -123
	SCN	
1N3926	EDL	415 -117
	SCN	
1N3927	EDL	417 -192
	SCN	
1N3928	EDL	419 -185
	SCN	
1N3929	EDL	232 - 78
IDC	SCN	
1N3930	EDL	411 - 66
	SCN	
1N3931	EDL	232 - 79
	SCN	
1N3932	SCN	417 -152
1N3933	SCN	419 -135
1N3934	EDL	406 -163
ETC	HSE	
IDC	SST	
1N3938	CEN	286 - 46
DIT	EDL	
SCN	SSI	
STI	THEF	
1N3939	CEN	286 - 97
EDL	SCN	
SSI	STI	
	THEF	
1N3940	CEN	286 -146
EDL	SCN	
SPE	SSI	
STI	THEF	
1N3941	CEN	286 -186
EDL	SCN	
SSI	STI	
	THEF	
1N3942	CEN	402 - 94
EDL	SCN	
SSI	STI	
	THEF	
1N3944	♦IDC	242 -158
SPE	SSI	
	STI	
1N3949	ΔMSC	386 - 17
AMX	♦GSE	
IDC	SCN	
	SIEG	
1N3950	ΔMSC	201 - 10
AMX	STI	
1N3951	ΔMSC	204 -121
AMX	STI	
1N3952	ETC	275 - 61
	UPI	
1N3953	CEN	248 -103
IDC	SPE	
1N3954	IDC	245 -157
MSC	SSI	
1N3956	IDC	244 -202
1N3957	ΔUNI	401 -157
CEN	MSC	
	TRWS	
1N3958	CEN	262 - 97
DII	GTC	
SCN	SPE	
	SSI	
1N3958C	CEN	262 - 96
SCN	SSI	
1N3959	CEN	262 -105
DII	SCN	
	SSI	
1N3959C	CEN	262 -104
SCN	SSI	
1N3960	CEN	262 -107
DII	IDC	
SCN	SSI	
1N3960C	CEN	262 -106
SCN	SSI	
1N3961	CEN	262 -111
DII	IDC	
SCN	SSI	
1N3961C	CEN	262 -110
SCN	SSI	
1N3962	CEN	262 -113
DII	IDC	
SCN	SPE	
	SSI	
1N3962C	CEN	262 -112
SCN	SSI	
1N3963	CEN	262 -117
DII	SCN	
	SSI	
1N3963C	CEN	262 -116
SCN	SSI	
1N3964	CEN	298 - 29
EDL	ETC	
HSE	IDC	
SSI	UPI	
	WAB	
1N3965	CEN	298 - 42
EDL	ETC	
HSE	IDC	
SPE	SSI	
UPI	WAB	
1N3966	CEN	298 - 50
EDL	ETC	
HSE	IDC	

cont.next page

Δ-Registered with JEDEC by this manufacturer

♦-Mfr's data sheet available in microfilm service

1. TYPE No. CROSS INDEX

IN TYPE NUMBER SEQUENCE

TYPE No.	MFRS	Pg&Line
1N3966		
(cont.)	SSI	
UPI	WAB	
1N3967	CEN	298 - 58
EDL	ETC	
HSE	IDC	
SPE	SSI	
UPI	WAB	
1N3968	CEN	302 -169
EDL	ETC	
HSE	IDC	
SAR	SSI	
SST	UPI	
	WAB	
1N3969	CEN	302 -204
EDL	ETC	
HSE	IDC	
SAR	SSI	
SST	UPI	
	WAB	
1N3970	CEN	303 - 8
EDL	HSE	
IDC	SAR	
SPE	SSI	
SST	UPI	
	WAB	
1N3971	CEN	303 - 27
EDL	HSE	
IDC	SAR	
SSI	SST	
UPI	WAB	
1N3972	EDL	306 -182
SAR	SSI	
	WAB	
1N3973	EDL	306 -183
SAR	SSI	
	WAB	
1N3974	EDL	306 -184
♦IDC	SAR	
SSI	WAB	
1N3975	EDL	306 -185
♦IDC	SAR	
SSI	WAB	
1N3976	CEN	309 -121
EDL	ETC	
HSE	WAB	
1N3977	CEN	309 -160
EDL	ETC	
HSE	♦IDC	
	WAB	
1N3978	CEN	309 -194
EDL	♦IDC	
	WAB	
1N3979	CEN	309 -218
EDL	WAB	
1N3981	ΔUNI	288 - 72
CEN	DIT	
MSC	♦TRWS	
	UPI	
1N3982	ΔUNI	288 -174
CEN	MSC	
♦TRWS	UPI	
1N3983	ΔUNI	289 - 38
CEN	MSC	
♦TRWS	UPI	
1N3984	♦GSE	378 - 94
IDC	MSC	
SAR	SCN	
1N3985	♦GSE	378 -149
IDC	MSC	
SAR	SCN	
1N3986	♦GSE	378 -163
IDC	MSC	
SAR	SCN	
1N3987	ΔPRX	292 -146
ASI	CDIL	
CEI	CEN	
EDL	ETC	
GTC	HTN	
IDI	SAR	
SSI	SST	
	WAB	
1N3988	ΔPRX	292 -185
ASI	CDIL	
CEI	CEN	
EDL	ETC	
GTC	HTN	
IDC	IDI	
SAR	♦SSEI	
SSI	SST	
THEF	WAB	
1N3989	ΔPRX	292 -194
ASI	CDIL	
CEI	CEN	
EDL	ETC	
GTC	HTN	
IDC	IDI	
SAR	SSI	
SST	THEF	
	WAB	
1N3990	ΔPRX	403 - 31
ASI	CDIL	
CEI	CEN	
EDL	ETC	
GTC	HTN	
IDC	IDI	
SAR	SPE	
♦SSEI	SSI	
SST	THEF	
	WAB	
1N3991	CEI	231 -154
CEN	HTN	
IDC	MDC	
	UPI	

TYPE No.	MFRS	Pg&Line
1N3992	♦CODI	232 - 50
DIT	EDL	
HTN	SPE	
1N3993	Δ♦MOTA	377 -105
CEN	DII	
ETC	♦GSE	
HTN	IDC	
MSC	SCN	
	SSI	
1N3993A	Δ♦MOTA	377 -101
CEN	DII	
ETC	GSE	
HTN	IDC	
♦MSC	SCN	
♦SIEG	SSI	
	WAB	
1N3994	Δ♦MOTA	377 -143
CEN	DII	
ETC	♦GSE	
HTN	IDC	
MSC	SCN	
SSI	WAB	
1N3994A	Δ♦MOTA	377 -140
CEN	DII	
ETC	GSE	
HTN	IDC	
♦MSC	SCN	
♦SIEG	SSI	
	WAB	
1N3995	Δ♦MOTA	378 - 26
CEN	DII	
DIT	ETC	
♦GSE	HTN	
IDC	MSC	
SCN	SPE	
	SSI	
1N3995A	Δ♦MOTA	378 - 22
CEN	DII	
ETC	GSE	
HTN	IDC	
♦MSC	SCN	
♦SIEG	SPE	
	SSI	
1N3996	CEN	378 - 69
DII	DIT	
ETC	♦GSE	
HTN	IDC	
♦MOTA	MSC	
SCN	SPE	
	SSI	
1N3996A	CEN	378 - 66
DII	DIT	
ETC	GSE	
HTN	IDC	
♦MOTA	♦MSC	
SCN	♦SIEG	
SPE	SSI	
TIC	UPI	
	WAB	
1N3997	Δ♦MOTA	378 -115
CEN	DII	
ETC	♦GSE	
HTN	IDC	
MSC	SAR	
SCN	SPE	
	SSI	
1N3997A	Δ♦MOTA	378 -110
CEN	DII	
ETC	GSE	
HTN	IDC	
♦MSC	SAR	
SCN	♦SIEG	
SPE	SSI	
	WAB	
1N3998	Δ♦MOTA	378 -168
CEN	DII	
DIT	ETC	
♦GSE	HTN	
IDC	MSC	
SAR	SCN	
SPE	SSI	
1N3998A	Δ♦MOTA	378 -164
CEN	DII	
ETC	GSE	
HTN	IDC	
♦MSC	SAR	
SCN	♦SIEG	
SPE	SSI	
1N3999	Δ♦MOTA	379 - 57
CEN	DII	
ETC	♦GSE	
HTN	♦IDC	
MSC	SAR	
SCN	SSI	
1N3999A	Δ♦MOTA	379 - 45
CEN	DII	
ETC	GSE	
HTN	IDC	
♦MSC	SAR	
SCN	♦SIEG	
SSI	UPI	
1N4000	Δ♦MOTA	379 -188
CEN	DII	
DIT	ETC	
♦GSE	HTN	
IDC	MSC	
SAR	SCN	
SPE	SSI	
1N4000A	Δ♦MOTA	379 -178
CEN	DII	
ETC	GSE	
HTN	IDC	
♦MSC	SAR	
cont.next col.		

TYPE No.	MFRS	Pg&Line
1N4000A		
(cont.)	SCN	
♦SIEG	SSI	
1N4001	Δ♦MOTA	280 - 15
ASI	CEI	
CEN	CODI	
CRI	DII	
♦DIT	♦DIX	
EDI	EDL	
ELT	ETC	
FEC	♦FGRS	
FSC	GDC	
♦GIC	GTC	
HTN	IDC	
IMTM	INC	
INR	INRJ	
♦ITTG	MAL	
MEHK	♦MSC	
♦MULB	NJS	
♦PHIN	PIHS	
♦PRX	PSLI	
♦RECT	RFE	
RHM	RHMJ	
♦RTCF	SAR	
SCE	SCN	
♦SIEG	SOD	
SPE	SPR	
SST	SSY	
STI	THEF	
TOSJ	UPI	
♦VALG	WAB	
1N4001F	♦FGRS	280 - 16
1N4001G	♦DII	280 - 17
1N4002	Δ♦MOTA	280 - 92
ASI	CEI	
CEN	CODI	
CRI	DII	
♦DIT	♦DIX	
EDI	EDL	
ELT	ETC	
FEC	♦FGRS	
FSC	GDC	
♦GIC	GTC	
HTN	IDC	
IMTM	INC	
INR	INRJ	
♦ITTG	MAL	
MEHK	♦MSC	
♦MULB	NJS	
♦PHIN	PIHS	
♦PRX	PSLI	
♦RECT	RFE	
RHM	RHMJ	
♦RTCF	SAR	
SCE	SCN	
♦SEKG	♦SIEG	
SLD	SOD	
SPE	SPR	
SST	SSY	
STI	THEF	
TOSJ	UPI	
♦VALG	WAB	
1N4002F	♦FGRS	280 - 93
1N4002G	♦DII	280 - 94
1N4003	Δ♦MOTA	280 -190
ASI	CEI	
CEN	CODI	
CRI	DII	
♦DIT	♦DIX	
EDI	EDL	
ELT	ETC	
FEC	♦FGRS	
FSC	GDC	
♦GIC	GTC	
HTN	IDC	
IMTM	INC	
INR	INRJ	
♦ITTG	MAL	
MEHK	♦MSC	
♦MULB	NJS	
♦PHIN	PIHS	
♦PRX	PSLI	
♦RECT	RFE	
RHM	RHMJ	
♦RTCF	SAR	
SCE	SCN	
♦SEKG	♦SIEG	
SLD	SOD	
SPE	SPR	
SST	SSY	
STI	THEF	
TOSJ	UPI	
♦VALG	WAB	
1N4003F	♦FGRS	280 -191
1N4003G	♦DII	280 -192
1N4004	Δ♦MOTA	281 - 95
ASI	CEI	
CEN	CODI	
CRI	DII	
♦DIT	♦DIX	
EDI	EDL	
ELT	ETC	
FEC	♦FGRS	
FSC	GDC	
♦GIC	GTC	
HTN	IMTM	
INC	INR	
INRJ	♦ITTG	
MAL	MEHK	
♦MSC	♦MULB	
NJS	♦PHIN	
PIHS	♦PRX	
PSLI	♦RECT	
cont.next col.		

TYPE No.	MFRS	Pg&Line
1N4004		
(cont.)	RFE	
RHM	RHMJ	
♦RTCF	SAR	
SCE	SCN	
♦SEKG	♦SIEG	
SLD	SOD	
SPE	SST	
SSY	STI	
THEF	TOSJ	
UPI	♦VALG	
	WAB	
1N4004F	♦FGRS	281 - 96
1N4004G	♦DII	281 - 97
1N4005	Δ♦MOTA	281 -208
ASI	CEI	
CEN	CODI	
CRI	DII	
♦DIT	♦DIX	
EDI	EDL	
ELT	ETC	
FEC	FGRS	
FSC	GDC	
♦GIC	GTC	
HTN	IDC	
IMTM	INC	
INR	INRJ	
♦ITTG	MAL	
MEHK	♦MSC	
♦MULB	NJS	
♦PHIN	PIHS	
♦PRX	PSLI	
♦RECT	RFE	
♦RTCF	SAR	
SCE	SCN	
♦SEKG	♦SIEG	
SLD	SOD	
SPE	SST	
SSY	STI	
THEF	TOSJ	
UPI	♦VALG	
	WAB	
1N4005F	♦FGRS	281 -209
1N4005G	♦DII	281 -210
1N4006	Δ♦MOTA	282 - 72
ASI	CEI	
CEN	CODI	
CRI	DII	
♦DIT	♦DIX	
EDI	EDL	
ELT	ETC	
FEC	♦FGRS	
FSC	GDC	
♦GIC	GTC	
HTN	IDC	
IMTM	INC	
INR	INRJ	
♦ITTG	MAL	
MEHK	♦MSC	
♦MULB	NJS	
♦PHIN	PIHS	
♦PRX	PSLI	
♦RECT	RFE	
♦RTCF	SAR	
SCE	SCN	
♦SEKG	♦SIEG	
SLD	SOD	
SPE	SST	
SSY	STI	
THEF	TOSJ	
UPI	♦VALG	
	WAB	
1N4006F	♦FGRS	282 - 73
1N4006G	♦DII	282 - 74
1N4007	Δ♦MOTA	401 -202
ASI	CEI	
CEN	CODI	
CRI	DII	
♦DIT	♦DIX	
EDI	EDL	
ELT	ETC	
FEC	♦FGRS	
FSC	GDC	
♦GIC	GTC	
HTN	IDC	
IMTM	INC	
INR	INRJ	
♦ITTG	MAL	
MEHK	♦MSC	
♦MULB	NJS	
♦PHIN	PIHS	
♦PRX	PSLI	
♦RECT	RFE	
♦RTCF	SAR	
SCE	SCN	
♦SEKG	♦SIEG	
SLD	SOD	
SPE	SSI	
SST	SSY	
STI	THEF	
TOSJ	UPI	
♦VALG	WAB	
1N4007F	♦FGRS	401 -203
1N4007G	♦DII	401 -204
1N4008	CEI	244 - 88
CEN	HTN	
♦IDC	SCE	
SLD	SPE	
	SST	
1N4009	♦APD	244 -183
CEI	CEN	
♦FSC	HTN	
IDC	MDC	
cont.next col.		

TYPE No.	MFRS	Pg&Line
1N4009		
(cont.)	MSC	
♦MULB	♦PHIN	
♦RTCF	SCE	
SPE	STI	
THEF	♦VALG	
1N4010	CDI	174 -176
CODI	IDC	
MSC	SIEG	
1N4011	CEN	401 - 97
SSI	UTX	
1N4012	CEN	295 -147
EDL	ETC	
HSE	IDC	
SCN	SSI	
	SST	
1N4013	CEN	295 -171
EDL	ETC	
HSE	IDC	
SCN	SSI	
	SST	
1N4014	CEN	295 -182
EDL	ETC	
HSE	IDC	
SCN	SSI	
	SST	
1N4015	CEN	403 - 72
EDL	ETC	
HSE	IDC	
SCN	SSI	
	SST	
1N4016	IDC	380 - 67
MSC	SSI	
1N4016A	IDC	380 - 58
MSC	SSI	
1N4016B	IDC	380 - 42
	MSC	
1N4017	IDC	380 -195
MSC	SSI	
1N4017A	IDC	380 -186
MSC	SSI	
1N4017B	IDC	380 -171
MSC	SSI	
1N4018	IDC	381 - 93
MSC	SSI	
1N4018A	IDC	381 - 85
MSC	SSI	
1N4018B	IDC	381 - 70
MSC	SSI	
1N4019	IDC	381 -195
MSC	SSI	
1N4019A	IDC	381 -192
MSC	SSI	
1N4019B	IDC	381 -183
MSC	SSI	
1N4020	IDC	382 -102
MSC	SSI	
1N4020A	IDC	382 - 93
MSC	SSI	
1N4020B	IDC	382 - 77
MSC	SSI	
1N4021	IDC	383 - 17
MSC	SSI	
1N4021A	IDC	383 - 9
MSC	SSI	
1N4021B	IDC	382 -193
MSC	SSI	
1N4022	IDC	383 -182
MSC	SSI	
1N4022A	IDC	383 -173
MSC	SSI	
1N4022B	IDC	383 -157
MSC	SSI	
1N4023	IDC	384 - 90
MSC	SSI	
1N4023A	IDC	384 - 82
MSC	SSI	
1N4023B	IDC	384 - 71
MSC	SSI	
1N4024	IDC	385 - 48
MSC	SSI	
1N4024A	IDC	385 - 39
MSC	SSI	
1N4024B	IDC	385 - 23
MSC	SSI	
1N4025	IDC	386 - 1
MSC	SSI	
1N4025A	IDC	385 -193
MSC	SSI	
1N4025B	IDC	385 -177
MSC	SSI	
1N4026	IDC	386 -106
MSC	SSI	
1N4026A	IDC	386 - 97
MSC	SSI	
1N4026B	IDC	386 - 82
MSC	SSI	
1N4027	IDC	387 - 23
MSC	SSI	
1N4027A	IDC	387 - 14
MSC	SSI	
1N4027B	IDC	386 -198
MSC	SSI	
1N4028	IDC	387 -162
MSC	SSI	
1N4028A	IDC	387 -152
MSC	SSI	
1N4028B	IDC	387 -136
MSC	SSI	
1N4029	IDC	388 - 81
MSC	SSI	
1N4029A	IDC	388 - 72
MSC	SSI	

Δ-Registered with JEDEC by this manufacturer

♦-Mfr's data sheet available in microfilm service

1. TYPE No. CROSS INDEX

IN TYPE NUMBER SEQUENCE

TYPE No.	MFRS	Pg&Line
1N4029B	IDC	388 - 56
	MSC	
	SSI	
1N4030	IDC	388 -187
	MSC	
	SSI	
1N4030A	IDC	388 -177
	MSC	
	SSI	
1N4030B	IDC	388 -161
	MSC	
	SSI	
1N4031	IDC	389 -100
	MSC	
	SSI	
1N4031A	IDC	389 - 91
	MSC	
	SSI	
1N4031B	IDC	389 - 75
	MSC	
	SSI	
1N4032	IDC	389 -197
	MSC	
	SSI	
1N4032A	IDC	389 -191
	MSC	
	SSI	
1N4032B	IDC	389 -179
	MSC	
	SSI	
1N4033	IDC	390 -108
	MSC	
	SSI	
1N4033A	IDC	390 -102
	MSC	
	SSI	
1N4033B	IDC	390 - 90
	MSC	
	SSI	
1N4034	IDC	391 - 41
	MSC	
	SSI	
1N4034A	IDC	391 - 34
	MSC	
	SSI	
1N4034B	IDC	391 - 21
	MSC	
	SSI	
1N4035	IDC	391 -178
	MSC	
	SSI	
1N4035A	MSC	391 -172
	SSI	
1N4035B	IDC	391 -160
	MSC	
	SSI	
1N4036	IDC	392 - 92
	MSC	
	SSI	
1N4036A	IDC	392 - 83
	MSC	
	SSI	
1N4036B	IDC	392 - 68
	MSC	
	SPE	
	SSI	
1N4037	IDC	393 - 12
	MSC	
	SPE	
	SSI	
1N4037A	IDC	393 - 7
	MSC	
	SSI	
1N4037B	IDC	392 -194
	MSC	
	SSI	
1N4038	IDC	393 -103
	MSC	
	SSI	
1N4038A	IDC	393 - 96
	MSC	
	SSI	
1N4038B	IDC	393 - 84
	MSC	
	SPE	
	SSI	
1N4039	IDC	394 - 20
	MSC	
	SSI	
1N4039A	IDC	394 - 12
	MSC	
	SSI	
1N4039B	IDC	393 -195
	MSC	
	SSI	
1N4040	IDC	394 -131
	MSC	
	SSI	
1N4040A	IDC	394 -124
	MSC	
	SSI	
1N4040B	IDC	394 -112
	MSC	
	SPE	
	SSI	
1N4041	IDC	395 - 41
	MSC	
1N4041A	IDC	395 - 35
	MSC	
1N4041B	IDC	395 - 23
	MSC	
1N4042	IDC	395 -139
	MSC	
1N4042A	IDC	395 -129
	MSC	
1N4042B	IDC	395 -113
	MSC	
	SPE	
1N4043	IDC	244 -184
1N4044	ΔPRX	310 - 24
	ASI	
	CEN	
	COO	♦DIT
	EDL	ETC
	HSE	IDC
	♦INR	INRJ
	♦NAT	NJS
	SAR	SSI
	STR	TIC
	UPI	WAB
1N4045	ΔPRX	310 - 25
	ASI	CEN
	COO	♦DIT
	EDL	ETC
	HSE	IDC
	♦INR	INRJ
	♦NAT	NJS
	SAR	SPE
	SSI	STR
	UPI	WAB
1N4046	ΔPRX	310 - 26
	ASI	CEN
	COO	♦DIT
	EDL	ETC
	HSE	IDC
	♦INR	INRJ
	SAR	SSI
	STR	UPI
		WAB
1N4047	ΔPRX	310 - 27
	ASI	CEN
	COO	♦DIT
	EDL	ETC
	HSE	IDC
	♦INR	INRJ
	♦NAT	SAR
	SPE	SSI
	STR	TIC
	UPI	WAB
1N4048	ΔPRX	310 - 28
	ASI	CEN
	COO	♦DIT
	EDL	ETC
	HSE	♦IDC
	♦INR	INRJ
	SAR	SSI
	STR	WAB
1N4049	ΔPRX	310 - 29
	ASI	CEN
	COO	♦DIT
	EDL	ETC
	HSE	IDC
	♦INR	INRJ
	♦NAT	SAR
	SPE	SSI
	STR	UPI
		WAB
1N4050	ΔPRX	310 - 30
	ASI	CEN
	COO	♦DIT
	EDL	ETC
	HSE	♦IDC
	♦INR	INRJ
	♦NAT	SAR
	SSI	STR
	UPI	WAB
1N4051	ΔPRX	310 - 32
	ASI	CEN
	COO	♦DIT
	EDL	IDC
	♦INR	INRJ
	♦NAT	SAR
	SSI	STR
	UPI	WAB
1N4052	ΔPRX	310 - 34
	ASI	CEN
	COO	♦DIT
	EDL	♦IDC
	♦INR	INRJ
	♦NAT	SAR
	SSI	STR
	TIC	UPI
		WAB
1N4053	ΔPRX	310 - 36
	ASI	CEN
	COO	♦DIT
	EDL	IDC
	♦INR	INRJ
	♦NAT	SAR
	SSI	STR
	UPI	WAB
1N4054	ΔPRX	310 - 38
	ASI	CEN
	COO	♦DIT
	EDL	♦IDC
	♦INR	INRJ
	♦NAT	SAR
	SPE	SSI
	STR	TIC
	UPI	WAB
1N4055	ΔPRX	310 - 40
	ASI	CEN
	COO	♦DIT
	EDL	IDC
	♦INR	INRJ
	♦NAT	SAR
	SSI	STR
	UPI	WAB
1N4056	ΔPRX	404 -157
	ASI	CEN
	COO	♦DIT
	EDL	♦IDC
	♦INR	INRJ
	♦NAT	NJS
	SAR	SSI
	STR	TIC
	UPI	WAB
1N4057	AMX	192 - 4
	CDI	CODI
	GSE	IDC
	♦MSC	SCE
	♦SIEG	SSI
		STI
1N4057A	Δ♦MSC	192 - 5
	AMX	CDI
	CODI	GSE
	IDC	SCE
	♦SIEG	SSI
		STI
1N4058	AMX	194 - 85
	CDI	CODI
	GSE	IDC
	♦MSC	SCE
	♦SIEG	SSI
	STI	WAB
1N4058A	AMX	194 - 86
	CDI	CODI
	GSE	IDC
	♦MSC	SCE
	♦SIEG	SSI
	STI	WAB
1N4059	AMX	197 - 86
cont.next col.		
1N4059	CDI	
(cont.)	CODI	GSE
	IDC	♦MSC
	SCE	♦SIEG
	SSI	STI
1N4059A	Δ♦MSC	197 - 87
	AMX	CDI
	CODI	GSE
	IDC	SCE
	♦SIEG	SSI
		STI
1N4060	Δ♦MSC	199 - 96
	AMX	CDI
	CODI	GSE
	IDC	SCE
	SIEG	SSI
		STI
1N4060A	AMX	199 - 97
	CDI	CODI
	GSE	IDC
	♦MSC	SCE
	SIEG	SSI
		STI
1N4061	Δ♦MSC	201 - 86
	AMX	CDI
	CODI	GSE
	IDC	SCE
	♦SIEG	SPE
	SSI	STI
1N4061A	Δ♦MSC	201 - 87
	AMX	CDI
	CODI	GSE
	IDC	SCE
	♦SIEG	SPE
	SSI	STI
1N4062	Δ♦MSC	202 -195
	AMX	CDI
	CODI	GSE
	IDC	SCE
	♦SIEG	SSI
		STI
1N4062A	Δ♦MSC	202 -196
	AMX	CDI
	CODI	GSE
	IDC	SCE
	♦SIEG	SSI
		STI
1N4063	Δ♦MSC	205 -156
	AMX	CDI
	CODI	♦GSE
	IDC	SCE
	SIEG	SSI
		STI
1N4063A	Δ♦MSC	205 -157
	AMX	CDI
	CODI	♦GSE
	IDC	SCE
	♦SIEG	SSI
		STI
1N4064	Δ♦MSC	207 - 80
	AMX	CDI
	CODI	♦GSE
	IDC	SCE
	♦SIEG	SSI
		STI
1N4064A	Δ♦MSC	207 - 81
	AMX	CDI
	CODI	♦GSE
	IDC	SCE
	♦SIEG	SSI
		STI
1N4065	Δ♦MSC	208 -173
	AMX	CDI
	CODI	♦GSE
	IDC	SCE
	♦SIEG	SSI
		STI
1N4065A	Δ♦MSC	208 -174
	AMX	CDI
	CODI	♦GSE
	IDC	SCE
	♦SIEG	SSI
		STI
1N4066	Δ♦MSC	210 - 92
	AMX	CDI
	CODI	♦GSE
	IDC	SCE
	♦SIEG	SPE
	SSI	STI
1N4066A	Δ♦MSC	210 - 93
	AMX	CDI
	CODI	♦GSE
	IDC	SCE
	♦SIEG	SSI
		STI
1N4067	Δ♦MSC	212 - 70
	AMX	CDI
	CODI	♦GSE
	IDC	SCE
	♦SIEG	SSI
		STI
1N4067A	Δ♦MSC	212 - 71
	AMX	CDI
	CODI	♦GSE
	IDC	SCE
	♦SIEG	SSI
		STI
1N4068	Δ♦MSC	213 - 87
	AMX	CDI
	CODI	♦GSE
	IDC	SCE
	♦SIEG	SSI
		STI
1N4068A	Δ♦MSC	213 - 88
	AMX	CDI
	CODI	♦GSE
	IDC	SCE
	♦SIEG	SSI
		STI
1N4069	Δ♦MSC	214 - 95
	AMX	CDI
	CODI	♦GSE
	IDC	SCE
	♦SIEG	SSI
		STI
1N4069A	Δ♦MSC	214 - 96
	AMX	CDI
	CODI	♦GSE
	IDC	SCE
	♦SIEG	SSI
		STI
1N4070	Δ♦MSC	215 - 84
	AMX	CDI
	CODI	♦GSE
	IDC	SCE
	♦SIEG	SSI
		STI
1N4070A	Δ♦MSC	215 - 85
	AMX	CDI
	CODI	♦GSE
	IDC	SCE
	♦SIEG	SSI
		STI
1N4071	Δ♦MSC	216 - 88
	AMX	CDI
	CODI	♦GSE
	IDC	SCE
	♦SIEG	SSI
		STI
1N4071A	Δ♦MSC	216 - 89
	AMX	CDI
	CODI	♦GSE
	IDC	SCE
	♦SIEG	SSI
		STI
1N4072	Δ♦MSC	217 - 69
	AMX	CDI
	CODI	♦GSE
	IDC	SCE
	♦SIEG	SSI
		STI
1N4072A	Δ♦MSC	217 - 70
	AMX	CDI
	CODI	♦GSE
	IDC	SCE
	♦SIEG	SSI
		STI
1N4073	Δ♦MSC	218 - 52
	AMX	CDI
	CODI	♦GSE
	IDC	SCE
	♦SIEG	SSI
		STI
1N4073A	Δ♦MSC	218 - 53
	AMX	CDI
	CODI	♦GSE
	IDC	SCE
	♦SIEG	SSI
		STI
1N4074	Δ♦MSC	219 - 28
	AMX	CDI
	CODI	♦GSE
	IDC	SCE
	♦SIEG	SSI
		STI
1N4074A	Δ♦MSC	219 - 29
	AMX	CDI
	CODI	♦GSE
	IDC	SCE
	♦SIEG	SSI
		STI
1N4075	Δ♦MSC	219 - 85
	AMX	CDI
	CODI	♦GSE
	IDC	SCE
	♦SIEG	SSI
		STI
1N4075A	Δ♦MSC	219 - 86
	AMX	CDI
	CODI	♦GSE
	IDC	SCE
	♦SIEG	SSI
		STI
1N4076	Δ♦MSC	220 - 7
	AMX	CDI
	CODI	♦GSE
	IDC	SCE
	♦SIEG	SSI
		STI
1N4076A	Δ♦MSC	220 - 8
	AMX	CDI
	CODI	♦GSE
	IDC	SCE
	♦SIEG	SSI
		STI
1N4077	Δ♦MSC	220 -169
	AMX	CDI
	CODI	♦GSE
	IDC	SCE
	♦SIEG	SSI
		STI
1N4077A	Δ♦MSC	220 -170
	AMX	CDI
	CODI	♦GSE
	IDC	SCE
	♦SIEG	SSI
		STI
1N4078	Δ♦MSC	221 - 23
	AMX	CDI
	CODI	♦GSE
	IDC	SCE
	♦SIEG	SSI
		STI
1N4078A	Δ♦MSC	221 - 24
	AMX	CDI
	CODI	♦GSE
	IDC	SCE
	♦SIEG	SSI
		STI
1N4079	Δ♦MSC	221 -129
	AMX	CDI
	CODI	♦GSE
	IDC	SCE
	♦SIEG	SSI
		STI
1N4079A	Δ♦MSC	221 -130
	AMX	CDI
	CODI	♦GSE
	IDC	SCE
	♦SIEG	SSI
		STI
1N4080	Δ♦MSC	222 - 83
	AMX	CDI
	CODI	♦GSE
	IDC	SCE
	♦SIEG	SSI
		STI
1N4080A	Δ♦MSC	222 - 84
	AMX	CDI
	CODI	♦GSE
	IDC	SCE
	♦SIEG	SSI
		STI
1N4081	Δ♦MSC	223 - 47
	AMX	CDI
	CODI	♦GSE
	IDC	SCE
	♦SIEG	SSI
		STI
1N4081A	Δ♦MSC	223 - 48
	AMX	CDI
	CODI	♦GSE
	IDC	SCE
	♦SIEG	SSI
		STI
1N4082	Δ♦MSC	223 -116
	AMX	CDI
	CODI	♦GSE
	IDC	SCE
	♦SIEG	SSI
		STI
1N4082A	Δ♦MSC	223 -117
	AMX	CDI
	CODI	♦GSE
	IDC	SCE
	♦SIEG	SSI
		STI
1N4083	Δ♦MSC	224 - 81
	AMX	CDI
	CODI	♦GSE
	IDC	SCE
	♦SIEG	SSI
		STI
1N4083A	Δ♦MSC	224 - 82
	AMX	CDI
	CODI	♦GSE
	IDC	SCE
	♦SIEG	SSI
		STI
1N4084	Δ♦MSC	225 -105
	AMX	CDI
	CODI	♦GSE
	IDC	SCE
	♦SIEG	SSI
		STI
1N4084A	Δ♦MSC	225 -106
	AMX	CDI
	CODI	♦GSE
	IDC	SCE
	♦SIEG	SSI
		STI
1N4085	Δ♦MSC	227 - 35
	AMX	CDI
	CODI	♦GSE
	IDC	SCE
	♦SIEG	SSI
		STI
1N4085A	Δ♦MSC	227 - 36
	AMX	CDI
	CODI	GSE
	IDC	SCE
	♦SIEG	SSI
		STI
1N4086	IDC	251 -130
	MSC	SCE
	SSI	SSY
1N4087	ASI	245 -145
	CEN	IDC
	MDC	SCE
	STI	WAB
1N4088	CEI	231 -203
	CEN	IDC
		UPI
1N4089	ΔSOD	282 -127
	CEN	ETC
	IDC	STI
		UPI
1N4092	CEI	231 - 77
	CEN	ETC
	IDC	MDC
cont.next page		

Δ-Registered with JEDEC by this manufacturer

♦-Mfr's data sheet available in microfilm service

1. TYPE No. CROSS INDEX

IN TYPE NUMBER SEQUENCE

TYPE No.	MFRS	Pg&Line
1N4092		
(cont.)	MSC	
	SCE	
	SSY	
	STI	
	UPI	
1N4093	CEI	231 - 78
	CEN	
	ETC	
	IDC	
	MSC	
	SCE	
	SSY	
	UPI	
1N4095	CEN	170 -201
	CODI	
	IDC	
	KSI	
	MSC	
	SCE	
	SIEG	
1N4096	IDC	219 - 95
	♦MSC	
	SCE	
	♦TRWS	
1N4097	IDC	220 -189
	♦MSC	
	SCE	
	♦TRWS	
1N4098	Δ♦UNI	224 - 87
	IDC	
	♦MSC	
	SCE	
	TRWS	
1N4099	Δ♦MOTA	177 -197
	♦APD	
	CDI	
	CEN	
	CODI	
	EAS	
	GDC	
	GHZ	
	HTN	
	IDC	
	KSI	
	MDC	
	♦MSC	
	SCE	
	♦SIEG	
	SPE	
	♦SPR	
	SSI	
	TRWS	
	UPI	
1N4100	Δ♦MOTA	179 -183
	♦APD	
	CDI	
	CEN	
	CODI	
	EAS	
	GDC	
	GHZ	
	HTN	
	IDC	
	KSI	
	♦MSC	
	SCE	
	♦SIEG	
	SPE	
	♦SPR	
	SSI	
	TRWS	
1N4101	Δ♦MOTA	181 -163
	CDI	
	CEN	
	CODI	
	EAS	
	GDC	
	GHZ	
	HTN	
	IDC	
	KSI	
	♦MSC	
	SCE	
	♦SIEG	
	SPE	
	♦SPR	
	SSI	
	TRWS	
1N4102	Δ♦MOTA	183 -154
	♦APD	
	CDI	
	CEN	
	CODI	
	EAS	
	GHZ	
	HTN	
	IDC	
	KSI	
	♦MSC	
	SCE	
	♦SIEG	
	♦SPR	
	SSI	
	TRWS	
1N4103	Δ♦MOTA	184 -211
	♦APD	
	CDI	
	CEN	
	CODI	
	EAS	
	GDC	
	GHZ	
	HTN	
	IDC	
	KSI	
	♦MSC	
	SCE	
	♦SIEG	
	♦SPR	
	SSI	
	TRWS	
1N4104	Δ♦MOTA	187 - 37
	♦APD	
	CDI	
	CEN	
	CODI	
	EAS	
	GDC	
	GHZ	
	HTN	
	IDC	
	KSI	
	♦MSC	
	SCE	
	♦SIEG	
	SPE	
	♦SPR	
	SSI	
	TRWS	
1N4105	Δ♦MOTA	188 -164
	♦APD	
	CDI	
	CEN	
	CODI	
	GDC	
	GHZ	
	HTN	
	IDC	
	KSI	
	♦MSC	
	SCE	
	♦SIEG	
	SPE	
	♦SPR	
	SSI	
	TRWS	
1N4106	Δ♦MOTA	190 -114
	♦APD	
	CDI	
	CEN	
	CODI	
	GDC	
	GHZ	
	HTN	
	IDC	
	KSI	
	♦MSC	
	SCE	
	♦SIEG	
	♦SPR	
	SSI	
	TRWS	
	WAB	
1N4107	Δ♦MOTA	192 -102
	♦APD	
	CDI	
	CEN	
	CODI	
	GDC	
	GHZ	
	HTN	
	IDC	
	KSI	
	♦MSC	
	SCE	
	♦SIEG	
	♦SPR	
	SSI	
	TRWS	
1N4108	Δ♦MOTA	193 -165
	♦APD	
	CDI	
	CEN	
	CODI	
	GHZ	
	HTN	
	IDC	
	KSI	
	♦MSC	
	SCE	
cont.next col.		

TYPE No.	MFRS	Pg&Line
1N4108		
(cont.)	♦SIEG	
	♦SPR	
	SSI	
	TRWS	
1N4109	Δ♦MOTA	194 -122
	♦APD	
	CDI	
	CEN	
	CODI	
	GDC	
	GHZ	
	HTN	
	IDC	
	KSI	
	♦MSC	
	SCE	
	♦SIEG	
	SPE	
	♦SPR	
	SSI	
	TRWS	
1N4110	Δ♦MOTA	196 - 32
	♦APD	
	CDI	
	CEN	
	CODI	
	GDC	
	GHZ	
	HTN	
	IDC	
	KSI	
	♦MSC	
	SCE	
	♦SIEG	
	♦SPR	
	SSI	
	TRWS	
	UPI	
1N4111	Δ♦MOTA	197 - 98
	♦APD	
	CDI	
	CEN	
	CODI	
	GHZ	
	HTN	
	IDC	
	KSI	
	♦MSC	
	SCE	
	♦SIEG	
	♦SPR	
	SSI	
	TRWS	
1N4112	Δ♦MOTA	198 - 31
	♦APD	
	CDI	
	CEN	
	CODI	
	GDC	
	GHZ	
	HTN	
	IDC	
	KSI	
	♦MSC	
	SCE	
	♦SIEG	
	♦SPR	
	SSI	
	TRWS	
1N4113	Δ♦MOTA	199 -114
	♦APD	
	CDI	
	CEN	
	CODI	
	GHZ	
	HTN	
	IDC	
	KSI	
	♦MSC	
	SCE	
	♦SIEG	
	♦SPR	
	SSI	
	TRWS	
1N4114	Δ♦MOTA	200 - 37
	♦APD	
	CDI	
	CEN	
	CODI	
	GDC	
	GHZ	
	HTN	
	IDC	
	KSI	
	♦MSC	
	SCE	
	♦SIEG	
	♦SPR	
	SSI	
	TRWS	
	WAB	
1N4115	Δ♦MOTA	201 -136
	♦APD	
	CDI	
	CEN	
	GDC	
	GHZ	
	HTN	
	IDC	
	KSI	
	♦MSC	
	SCE	
	♦SIEG	
	♦SPR	
	SSI	
	TRWS	
1N4116	Δ♦MOTA	203 - 46
	♦APD	
	CDI	
	CEN	
	GDC	
	GHZ	
	HTN	
	IDC	
	KSI	
	♦MSC	
	SCE	
	♦SIEG	
	♦SPR	
	SSI	
	TRWS	
1N4117	Δ♦MOTA	204 - 94
	♦APD	
	CDI	
	CEN	
	GHZ	
	HTN	
	IDC	
	KSI	
	♦MSC	
	SCE	
	♦SIEG	
	♦SPR	
	SSI	
	TRWS	
1N4118	Δ♦MOTA	204 -186
	♦APD	
	CDI	
	CEN	
	GDC	
	GHZ	
	HTN	
	IDC	
	KSI	
	♦MSC	
	SCE	
	♦SIEG	
	♦SPR	
	SSI	
	TRWS	
1N4119	Δ♦MOTA	206 - 26
	♦APD	
	CDI	
	CEN	
	GHZ	
	HTN	
	IDC	
	KSI	
	♦MSC	
	SCE	
	♦SIEG	
	♦SPR	
	SSI	
	TRWS	
1N4120	Δ♦MOTA	206 -118
	♦APD	
	CDI	
	CEN	
	GDC	
	GHZ	
	HTN	
	IDC	
	KSI	
	♦MSC	
	SCE	
	♦SIEG	
	♦SPR	
	SSI	
	TRWS	
1N4121	Δ♦MOTA	208 - 3
	♦APD	
	♦CDI	
	CEN	
	GDC	
	GHZ	
	HTN	
	IDC	
	KSI	
	♦MSC	
	SCE	
	♦SIEG	
	SPE	
	♦SPR	
	SSI	
	TRWS	

TYPE No.	MFRS	Pg&Line
1N4122	Δ♦MOTA	209 - 92
	♦APD	
	CEN	
	GDC	
	HTN	
	IDC	
	♦MSC	
	SCE	
	♦SIEG	
	♦SPR	
	SSI	
	TRWS	
1N4123	Δ♦MOTA	210 -131
	♦APD	
	CEN	
	GDC	
	HTN	
	IDC	
	♦MSC	
	SCE	
	♦SIEG	
	♦SPR	
	SSI	
	TRWS	
1N4124	Δ♦MOTA	211 -152
	♦APD	
	CEN	
	GDC	
	HTN	
	IDC	
	♦MSC	
	SCE	
	♦SIEG	
	SPE	
	♦SPR	
	SSI	
	TRWS	
1N4125	Δ♦MOTA	212 -164
	♦APD	
	CEN	
	GDC	
	HTN	
	IDC	
	♦MSC	
	SCE	
	♦SIEG	
	♦SPR	
	SSI	
1N4126	Δ♦MOTA	213 -180
	♦APD	
	CEN	
	GDC	
	HTN	
	IDC	
	♦MSC	
	SCE	
	♦SIEG	
	♦SPR	
	SSI	
	WAB	
1N4127	Δ♦MOTA	214 -163
	♦APD	
	CEN	
	GDC	
	HTN	
	IDC	
	♦MSC	
	SCE	
	♦SIEG	
	♦SPR	
	SSI	
1N4128	Δ♦MOTA	215 -139
	♦APD	
	CEN	
	HTN	
	IDC	
	♦MSC	
	SCE	
	♦SIEG	
	♦SPR	
	SSI	
	SST	
1N4129	Δ♦MOTA	215 -172
	♦APD	
	CEN	
	GDC	
	HTN	
	IDC	
	♦MSC	
	SCE	
	♦SIEG	
	SSI	
1N4130	Δ♦MOTA	216 -147
	♦APD	
	CEN	
	GDC	
	HTN	
	IDC	
	♦MSC	
	SCE	
	♦SIEG	
	SSI	
1N4131	Δ♦MOTA	217 -138
	♦APD	
	CEN	
	GDC	
	HTN	
	IDC	
	♦MSC	
	SCE	
	♦SIEG	
	SSI	
1N4132	Δ♦MOTA	218 -124
	♦APD	
	CEN	
	GDC	
	HTN	
	IDC	
	♦MSC	
	SCE	
	♦SIEG	
	SSI	
1N4133	CEN	219 - 73
	HTN	
	IDC	
	♦MOTA	
	♦MSC	
	SCE	
	♦SIEG	
	SSI	
1N4134	Δ♦MOTA	219 -111
	CEN	
	GDC	
	HTN	
	IDC	
	♦MSC	
	SCE	
	♦SIEG	
	SSI	
1N4135	Δ♦MOTA	220 - 67
	CEN	
	GDC	
	HTN	
	IDC	
	♦MSC	
	SCE	
	♦SIEG	
	SSI	
1N4136	CEN	304 - 62
	COO	
	DIT	
	EDL	
	HSE	
	HTN	
	IDC	
	IDI	
	PRX	
	SAR	
	SSI	
	UPI	
1N4137	CEN	304 -110
	COO	
	EDL	
	ETC	
	HSE	
	HTN	
	IDC	
	IDI	
	PRX	
	SAR	
	SSI	
	UPI	
1N4138	ASI	304 -147
	CEN	
	COO	
	EDL	
	HSE	
	HTN	
	IDC	
	IDI	
	PRX	
	SAR	
	SPE	
	SSI	
	UPI	
	WAB	
1N4139	Δ♦SOD	287 -178
	ASI	
	CEN	
	CODI	
	EDI	
	EDL	
	HTN	
	IDC	
	SCN	
	SPE	
	SSI	
cont.next col.		

TYPE No.	MFRS	Pg&Line
1N4139		
(cont.)	STI	
	UPI	
	WAB	
1N4140	Δ♦SOD	288 - 16
	ASI	
	CEN	
	CODI	
	EDI	
	EDL	
	HTN	
	IDC	
	SCN	
	SIEG	
	SSI	
	SSY	
	STI	
	UPI	
	WAB	
1N4141	Δ♦SOD	288 - 92
	ASI	
	CEN	
	CODI	
	EDI	
	EDL	
	HTN	
	IDC	
	SCN	
	SIEG	
	SPE	
	SSI	
	SSY	
	STI	
	UPI	
	WAB	
1N4142	Δ♦SOD	288 -190
	ASI	
	CEN	
	CODI	
	EDI	
	EDL	
	HTN	
	IDC	
	SCN	
	SPE	
	SSI	
	STI	
	UPI	
	WAB	
1N4143	Δ♦SOD	289 - 56
	ASI	
	CEN	
	CODI	
	EDI	
	EDL	
	HTN	
	IDC	
	SCN	
	SPE	
	SSI	
	STI	
1N4144	Δ♦SOD	289 -126
	ASI	
	CEN	
	CODI	
	EDI	
	EDL	
	HTN	
	IDC	
	SCN	
	SSI	
	STI	
1N4145	Δ♦SOD	402 -165
	ASI	
	CEN	
	CODI	
	EDI	
	EDL	
	HTN	
	IDC	
	SCN	
	SPE	
	SSI	
	SSY	
	STI	
	UPI	
1N4146	Δ♦SOD	406 -121
	ASI	
	CEN	
	CODI	
	EDI	
	EDL	
	HTN	
	IDC	
	SCN	
	SPE	
	SSI	
	SSY	
	STI	
	UPI	
1N4147	CEN	245 - 15
	HTN	
	IDC	
	MSC	
	SOD	
	STI	
1N4148	♦ALGG	246 -108
	♦APD	
	♦APX	
	ASI	
	CDIL	
	CEI	
	CEN	
	♦DIX	
	♦FSC	
	GDC	
	HITJ	
	HTN	
	IDC	
	IMTM	
	INC	
	♦ITTG	
	MISI	
	♦MSC	
	♦MULB	
	NJS	
	♦PHIN	
	RHM	
	RHMJ	
	♦RTCF	
	SCE	
	SCN	
	SELI	
	♦SIEG	
	♦SLCB	
	SLD	
	SOD	
	SPE	
	SPR	
	STI	
	THEF	
	TOSJ	
	♦UNI	
	UPI	
	♦VALG	
	WAB	
1N4149	♦ALGG	247 - 51
	♦APD	
	ASI	
	CEN	
	FSC	
	GDC	
	HITJ	
	HTN	
	IDC	
	INC	
	♦ITTG	
	MISI	
	MSC	
	♦MULB	
	♦PHIN	
	RHM	
	RHMJ	
	♦RTCF	
	SCE	
	♦SLCB	
	SLD	
	SPE	
	SPR	
	SST	
	STI	
	THEF	
	♦UNI	
	♦VALG	
	WAB	
1N4150	♦APD	251 - 99
	♦APX	
	ASI	
	CEN	
	♦FSC	
	GDC	
	HITJ	
	HTN	
	IDC	
	♦ITTG	
	MSC	
	♦MULB	
	♦PHIN	
	RHM	
	RHMJ	
	♦RTCF	
	SCE	
	SCN	
	SLD	
	SPE	
	SPR	
	SST	
	SSY	
	STI	
	THEF	
	♦UNI	
	UPI	
	♦VALG	
	WAB	
1N4151	♦ALGG	246 -109
cont.next col.		

TYPE No.	MFRS	Pg&Line
1N4151		
(cont.)	APD	
	♦APX	
	HITJ	
	♦INC	
	♦ITTG	
	RHMJ	
	SPR	
	WAB	
1N4152	♦APD	245 - 76
	ASI	
	CEN	
	FSC	
	GDC	
	HITJ	
	HTN	
	IDC	
	♦ITTG	
	♦MSC	
	RHM	
	RHMJ	
	SCE	
	SCN	
	SLD	
	SPE	
	SST	
	SSY	
	STI	
	THEF	
	♦UNI	
	WAB	
1N4153	♦APD	246 -110
	ASI	
	CEN	
	FSC	
	GDC	
	HITJ	
	HTN	
	IDC	
	♦ITTG	
	♦MSC	
	RHM	
	RHMJ	
	SCE	
	SCN	
	SLD	
	SPE	
	SPR	
	SST	
	STI	
	THEF	
	♦UNI	
	WAB	
1N4154	♦ALGG	245 - 38
	♦APD	
	♦APX	
	ASI	
	CEN	
	FSC	
	GDC	
	HITJ	
	HTN	
	IDC	
	INC	
	♦ITTG	
	MISI	
	♦MSC	
	♦MULB	
	♦PHIN	
	RHM	
	RHMJ	
	♦RTCF	
	SCE	
	SCN	
	SLD	
	SPE	
	SST	
	STI	
	THEF	
	♦UNI	
	UPI	
	♦VALG	
	WAB	
1N4156	APD	232 - 17
	CEN	
	CODI	
	EAS	
	GDC	
	HTN	
	IDC	
	SPE	
	UPI	
1N4157	APD	232 - 19
	CEN	
	CODI	
	EAS	
	GDC	
	HTN	
	IDC	
	SPE	
	UPI	
1N4158	CEN	178 -142
	HTN	
	IDC	
	SAR	
	SCE	
	SCN	
	SPE	
1N4158A	CEN	178 -130
	HTN	
	IDC	
	SAR	
	SCE	
	SCN	
1N4158B	CEN	178 - 97
	HTN	
	IDC	
	SAR	
	SCE	
	SCN	
1N4159	CEN	180 -135
	HTN	
	IDC	
	SAR	
	SCE	
	SCN	
1N4159A	CEN	180 -122
	HTN	
	IDC	
	SAR	
	SCE	
	SCN	
1N4159B	CEN	180 - 90
	HTN	
	IDC	
	MSC	
	SAR	
	SCE	
	SCN	
1N4160	CEN	182 -123
	HTN	
	IDC	
	SAR	
	SCE	
	SCN	
1N4160A	CEN	182 -110
	HTN	
	IDC	
	SAR	
	SCE	
	SCN	
1N4160B	CEN	182 - 75
	HTN	
	IDC	
	MSC	
	SAR	
	SCE	
	SCN	
1N4161	CEN	185 -151
	HTN	
	IDC	
	SAR	
	SCE	
	SCN	
1N4161A	CEN	185 -139
	HTN	
	IDC	
	MSC	
	SAR	
	SCE	
	SCN	
1N4161B	CEN	185 -106
	HTN	
	IDC	
	MSC	
	SAR	
	SCE	
	SCN	
1N4162	CEN	188 - 10
	HTN	
	IDC	
	SAR	
	SCE	
	SCN	
	WAB	
1N4162A	CEN	187 -204
	HTN	
	IDC	
	SAR	
	SCE	
	SCN	
1N4162B	CEN	187 -164
cont.next page		

Δ-Registered with JEDEC by this manufacturer

♦-Mfr's data sheet available in microfilm service

1. TYPE No. CROSS INDEX

IN TYPE NUMBER SEQUENCE

TYPE No.	MFRS	Pg&Line
1N4162B		
(cont.)	HTN	
	IDC	
	MSC	
	SAR	
	SCE	
	SCN	
1N4163	CEN	189 -124
	HTN	
	IDC	
	MSC	
	SAR	
	SCE	
	SCN	
	SPE	
1N4163A	CEN	189 -111
	HTN	
	IDC	
	MSC	
	SAR	
	SCE	
	SCN	
1N4163B	CEN	189 - 77
	HTN	
	IDC	
	SAR	
	SCE	
	SCN	
	SPE	
1N4164	CEN	191 - 99
	HTN	
	IDC	
	MSC	
	SAR	
	SCE	
	SCN	
1N4164A	CEN	191 - 84
	HTN	
	IDC	
	SAR	
	SCE	
	SCN	
1N4164B	CEN	191 - 44
	HTN	
	IDC	
	MSC	
	SAR	
	SCE	
	SCN	
	SSY	
1N4165	CEN	193 - 43
	HTN	
	IDC	
	SAR	
	SCE	
	SCN	
1N4165A	CEN	193 - 29
	HTN	
	IDC	
	MSC	
	SAR	
	SCE	
	SCN	
1N4165B	CEN	192 -210
	HTN	
	IDC	
	MSC	
	SAR	
	SCE	
	SCN	
	SSY	
1N4166	CEN	195 - 98
	HTN	
	IDC	
	MSC	
	SAR	
	SCE	
	SCN	
	SSY	
1N4166A	CEN	195 - 82
	HTN	
	IDC	
	MSC	
	SAR	
	SCE	
	SCN	
	SPE	
1N4166B	CEN	195 - 44
	HTN	
	IDC	
	MSC	
	SAR	
	SCE	
	SCN	
1N4167	CEN	196 -187
	HTN	
	IDC	
	MSC	
	SAR	
	SCE	
	SCN	
1N4167A	CEN	196 -172
	HTN	
	IDC	
	MSC	
	SAR	
	SCE	
	SCN	
1N4167B	CEN	196 -139
	HTN	
	IDC	
	SAR	
	SCE	
	SCN	
1N4168	CEN	198 -206
	HTN	
	IDC	
	SAR	
	SCE	
	SCN	
	SPE	
1N4168A	CEN	198 -190
	HTN	
	IDC	
	MSC	
	SAR	
	SCE	
	SCN	
1N4168B	CEN	198 -155
	HTN	
	IDC	
	SAR	
	SCE	
	SCN	
1N4169	CEN	200 -196
	HTN	
	IDC	
	SAR	
	SCE	
	SCN	
	SPE	
1N4169A	CEN	200 -181
	HTN	
	IDC	
	SAR	
	SCE	
	SCN	
1N4169B	CEN	200 -148
	HTN	
	IDC	
	MSC	
	SAR	
	SCE	
	SCN	
1N4170	CEN	202 - 96
	HTN	
	IDC	
	MSC	
	SAR	
	SCE	
	SCN	
	SPE	
1N4170A	CEN	202 - 81
	HTN	
	IDC	
	SAR	
	SCE	
	SCN	
1N4170B	CEN	202 - 46
	HTN	
	IDC	
	MSC	
	SAR	
	SCE	
	SCN	
1N4171	CEN	203 -191
	HTN	
	IDC	
	SAR	
	SCE	
	SCN	
	SPE	
	SSY	
1N4171A	CEN	203 -177
cont.next col.		

TYPE No.	MFRS	Pg&Line
1N4171A		
(cont.)	HTN	
	IDC	
	MSC	
	SAR	
	SCE	
	SCN	
1N4171B	CEN	203 -144
	HTN	
	IDC	
	SAR	
	SCE	
	SCN	
	SPE	
1N4172	CEN	205 -134
	HTN	
	IDC	
	MSC	
	SAR	
	SCE	
	SCN	
1N4172A	CEN	205 -119
	HTN	
	IDC	
	SAR	
	SCE	
	SCN	
1N4172B	CEN	205 - 83
	HTN	
	IDC	
	SAR	
	SCE	
	SCN	
	SPE	
1N4173	CEN	207 - 58
	HTN	
	IDC	
	MSC	
	SAR	
	SCE	
	SCN	
	SSY	
1N4173A	CEN	207 - 43
	HTN	
	IDC	
	MSC	
	SAR	
	SCE	
	SCN	
1N4173B	CEN	207 - 8
	HTN	
	IDC	
	MSC	
	SAR	
	SCE	
	SCN	
	SSY	
1N4174	CEN	208 -151
	HTN	
	IDC	
	MSC	
	SAR	
	SCE	
	SCN	
1N4174A	CEN	208 -137
	HTN	
	IDC	
	MSC	
	SAR	
	SCE	
	SCN	
	SSY	
1N4174B	CEN	208 -101
	HTN	
	IDC	
	MSC	
	SAR	
	SCE	
	SCN	
	SSY	
1N4175	CEN	210 - 3
	HTN	
	IDC	
	MSC	
	SAR	
	SCE	
	SCN	
1N4175A	CEN	209 -194
	HTN	
	IDC	
	SAR	
	SCE	
	SCN	
1N4175B	CEN	209 -167
	HTN	
	IDC	
	MSC	
	SAR	
	SCE	
	SCN	
1N4176	CEN	211 - 40
	HTN	
	IDC	
	MSC	
	SAR	
	SCE	
	SCN	
1N4176A	CEN	211 - 29
	HTN	
	IDC	
	MSC	
	SAR	
	SCE	
	SCN	
1N4176B	CEN	211 - 4
	HTN	
	IDC	
	SAR	
	SCE	
	SCN	
1N4177	CEN	212 - 49
	HTN	
	IDC	
	SAR	
	SCE	
	SCN	
1N4177A	CEN	212 - 38
	HTN	
	IDC	
	MSC	
	SAR	
	SCE	
	SCN	
1N4177B	CEN	212 - 16
	HTN	
	IDC	
	SAR	
	SCE	
	SCN	
1N4178	CEN	213 - 65
	HTN	
	IDC	
	MSC	
	SAR	
	SCE	
	SCN	
1N4178A	CEN	213 - 54
	HTN	
	IDC	
	MSC	
	SAR	
	SCE	
	SCN	
1N4178B	CEN	213 - 33
	HTN	
	IDC	
	MSC	
	SAR	
	SCE	
	SCN	
1N4179	CEN	214 - 60
	HTN	
	IDC	
	SAR	
	SCE	
	SCN	
1N4179A	CEN	214 - 50
	HTN	
	IDC	
	MSC	
	SAR	
	SCE	
	SCN	
1N4179B	CEN	214 - 31
	HTN	
	IDC	
	SAR	
	SCE	
	SCN	
1N4180	CEN	215 - 50
	HTN	
	IDC	
	SAR	
	SCE	
	SCN	
	SPE	

TYPE No.	MFRS	Pg&Line
1N4180A	CEN	215 - 38
	HTN	
	IDC	
	SAR	
	SCE	
	SCN	
1N4180B	CEN	215 - 17
	HTN	
	IDC	
	MSC	
	SAR	
	SCE	
	SCN	
1N4181	CEN	216 - 54
	HTN	
	IDC	
	SAR	
	SCE	
	SCN	
1N4181A	CEN	216 - 43
	HTN	
	IDC	
	MSC	
	SAR	
	SCE	
	SCN	
1N4181B	CEN	216 - 23
	HTN	
	IDC	
	SAR	
	SCE	
	SCN	
1N4182	CEN	217 - 35
	HTN	
	IDC	
	SAR	
	SCE	
	SCN	
1N4182A	CEN	217 - 24
	HTN	
	IDC	
	SAR	
	SCE	
	SCN	
1N4182B	CEN	217 - 4
	HTN	
	IDC	
	MSC	
	SAR	
	SCE	
	SCN	
1N4183	CEN	218 - 18
	HTN	
	IDC	
	SAR	
	SCE	
	SCN	
1N4183A	CEN	218 - 6
	HTN	
	IDC	
	MSC	
	SAR	
	SCE	
	SCN	
1N4183B	CEN	217 -186
	HTN	
	IDC	
	SAR	
	SCE	
	SCN	
1N4184	CEN	218 -197
	HTN	
	IDC	
	MSC	
	SAR	
	SCE	
	SCN	
1N4184A	CEN	218 -186
	HTN	
	IDC	
	SAR	
	SCE	
	SCN	
1N4184B	CEN	218 -166
	HTN	
	IDC	
	MSC	
	SAR	
	SCE	
	SCN	
1N4185	CEN	219 -176
	HTN	
	IDC	
	MSC	
	SAR	
	SCE	
	SCN	
	SSY	
1N4185A	CEN	219 -165
	HTN	
	IDC	
	MSC	
	SAR	
	SCE	
	SCN	
1N4185B	CEN	219 -148
	HTN	
	IDC	
	SAR	
	SCE	
	SCN	
1N4186	CEN	220 -138
	HTN	
	IDC	
	MSC	
	SAR	
	SCE	
	SCN	
	SPE	
1N4186A	CEN	220 -126
	HTN	
	IDC	
	MSC	
	SAR	
	SCE	
	SCN	
1N4186B	CEN	220 -107
	HTN	
	IDC	
	MSC	
	SAR	
	SCE	
	SCN	
1N4187	CEN	221 -101
	HTN	
	IDC	
	MSC	
	SAR	
	SCE	
	SCN	
	SPE	
1N4187A	CEN	221 - 89
	HTN	
	IDC	
	MSC	
	SAR	
	SCE	
	SCN	
1N4187B	CEN	221 - 72
	HTN	
	IDC	
	MSC	
	SAR	
	SCE	
	SCN	
	THEF	
1N4188	CEN	222 - 54
	HTN	
	IDC	
	MSC	
	SAR	
	SCE	
	SCN	
1N4188A	CEN	222 - 40
	HTN	
	IDC	
	MSC	
	SAR	
	SCE	
	SCN	
1N4188B	CEN	222 - 23
	HTN	
	IDC	
	SAR	
	SCE	
	SCN	
	THEF	
1N4189	CEN	223 - 8
	HTN	
	IDC	
	SAR	
	SCE	
	SCN	
	SPE	
1N4189A	CEN	222 -184
cont.next col.		

TYPE No.	MFRS	Pg&Line
1N4189A		
(cont.)	HTN	
	IDC	
	SAR	
	SCE	
	SCN	
1N4189B	CEN	222 -168
	HTN	
	IDC	
	MSC	
	SAR	
	SCE	
	SCN	
	SPE	
	THEF	
1N4190	CEN	224 - 41
	HTN	
	IDC	
	SAR	
	SCE	
	SCN	
1N4190A	CEN	224 - 28
	HTN	
	IDC	
	MSC	
	SAR	
	SCE	
	SCN	
1N4190B	CEN	224 - 12
	HTN	
	IDC	
	MSC	
	SAR	
	SCE	
	SCN	
	THEF	
1N4191	CEN	224 -171
	HTN	
	IDC	
	SAR	
	SCE	
	SCN	
1N4191A	CEN	224 -160
	HTN	
	IDC	
	MSC	
	SAR	
	SCE	
	SCN	
1N4191B	CEN	224 -145
	HTN	
	IDC	
	MSC	
	SAR	
	SCE	
	SCN	
	THEF	
1N4192	CEN	225 -181
	HTN	
	IDC	
	SAR	
	SCE	
	SCN	
	WAB	
1N4192A	CEN	225 -168
	HTN	
	IDC	
	MSC	
	SAR	
	SCE	
	SCN	
1N4192B	CEN	225 -150
	HTN	
	IDC	
	SAR	
	SCE	
	SCN	
	THEF	
1N4193	CEN	226 -182
	HTN	
	IDC	
	MSC	
	SAR	
	SCE	
	SCN	
	SPE	
1N4193A	CEN	226 -170
	HTN	
	IDC	
	MSC	
	SAR	
	SCE	
	SCN	
1N4193B	CEN	226 -154
	HTN	
	IDC	
	SAR	
	SCE	
	SCN	
	THEF	
1N4194	UTX	379 - 67
1N4194A	UTX	379 - 58
1N4194B	UTX	379 - 46
1N4195	UTX	379 -198
1N4195A	UTX	379 -189
1N4195B	UTX	379 -179
1N4196	UTX	380 -107
1N4196A	UTX	380 - 98
1N4196B	UTX	380 - 86
1N4197	UTX	381 - 28
1N4197A	UTX	381 - 18
1N4197B	UTX	381 - 6
1N4198	UTX	381 -138
1N4198A	UTX	381 -128
1N4198B	UTX	381 -113
1N4199	UTX	382 - 26
1N4199A	UTX	382 - 16
1N4199B	UTX	382 - 4
1N4200	UTX	382 -148
1N4200A	UTX	382 -137
1N4200B	UTX	382 -121
1N4201	UTX	383 - 55
1N4201A	UTX	383 - 44
1N4201B	UTX	383 - 31
1N4202	UTX	383 -132
1N4202A	UTX	383 -125
1N4202B	UTX	383 -119
1N4203	UTX	384 - 33
1N4203A	UTX	384 - 21
1N4203B	UTX	384 - 5
1N4204	UTX	384 -130
1N4204A	UTX	384 -118
1N4204B	UTX	384 -104
1N4205	UTX	384 -192
1N4205A	UTX	384 -187
1N4205B	UTX	384 -183
1N4206	UTX	385 - 96
1N4206A	UTX	385 - 83
1N4206B	UTX	385 - 68
1N4207	UTX	385 -158
1N4207A	UTX	385 -154
1N4207B	UTX	385 -150
1N4208	UTX	386 - 43
1N4208A	UTX	386 - 31
1N4208B	UTX	386 - 18
1N4209	UTX	386 -150
1N4209A	UTX	386 -138
1N4209B	UTX	386 -123
1N4210	UTX	387 - 65
1N4210A	UTX	387 - 53
1N4210B	UTX	387 - 39
1N4211	UTX	387 -120
1N4211A	UTX	387 -117
1N4211B	UTX	387 -115

TYPE No.	MFRS	Pg&Line
1N4212	UTX	388 - 7
1N4212A	UTX	387 -197
1N4212B	UTX	387 -181
1N4213	UTX	388 -123
1N4213A	UTX	388 -111
1N4213B	UTX	388 - 99
1N4214	UTX	389 - 32
1N4214A	UTX	389 - 20
1N4214B	UTX	389 - 5
1N4215	UTX	389 -141
1N4215A	UTX	389 -129
1N4215B	UTX	389 -116
1N4216	UTX	390 - 33
1N4216A	UTX	390 - 22
1N4216B	UTX	390 - 9
1N4217	UTX	390 -140
1N4217A	UTX	390 -129
1N4217B	UTX	390 -117
1N4218	UTX	391 - 3
1N4218A	UTX	390 -198
1N4218B	UTX	390 -195
1N4219	UTX	391 - 75
1N4219A	UTX	391 - 64
1N4219B	UTX	391 - 51
1N4220	UTX	391 -141
1N4220A	UTX	391 -135
1N4220B	UTX	391 -131
1N4221	UTX	392 - 6
1N4221A	UTX	391 -199
1N4221B	UTX	391 -187
1N4222	UTX	392 - 51
1N4222A	UTX	392 - 47
1N4222B	UTX	392 - 44
1N4223	UTX	392 -133
1N4223A	UTX	392 -121
1N4223B	UTX	392 -107
1N4224	UTX	393 - 45
1N4224A	UTX	393 - 34
1N4224B	UTX	393 - 22
1N4225	UTX	393 -139
1N4225A	UTX	393 -128
1N4225B	UTX	393 -115
1N4226	UTX	394 - 60
1N4226A	UTX	394 - 48
1N4226B	UTX	394 - 35
1N4227	UTX	394 -166
1N4227A	UTX	394 -155
1N4227B	UTX	394 -142
1N4228	UTX	395 - 74
1N4228A	UTX	395 - 63
1N4228B	UTX	395 - 51
1N4229	UTX	395 -183
1N4229A	UTX	395 -172
1N4229B	UTX	395 -158
1N4230	AMX	396 - 32
IDC	UTX	
1N4230A	UTX	396 - 28
1N4230B	UTX	396 - 25
1N4231	UTX	396 -101
1N4231A	UTX	396 - 90
1N4231B	UTX	396 - 78
1N4232	UTX	396 -188
1N4232A	UTX	396 -177
1N4232B	UTX	396 -165
1N4233	UTX	397 - 77
1N4233A	UTX	397 - 66
1N4233B	UTX	397 - 54
1N4234	UTX	397 -142
1N4234A	UTX	397 -136
1N4234B	UTX	397 -131
1N4235	UTX	398 - 20
1N4235A	UTX	398 - 9
1N4235B	UTX	397 -192
1N4236	UTX	398 - 97
1N4236A	UTX	398 - 88
1N4236B	UTX	398 - 79
1N4237	UTX	398 -153
1N4237A	UTX	398 -151
1N4237B	UTX	398 -149
1N4238	UTX	399 - 23
1N4238A	UTX	399 - 13
1N4238B	UTX	399 - 4
1N4239	UTX	399 -119
1N4239A	UTX	399 -110
1N4239B	UTX	399 -101
1N4240	IDC	378 - 55
MSC	SCE	
1N4241	IDC	378 -148
MSC	SCE	
1N4242	IDC	271 - 95
PDE	STI	
1N4243	IDC	271 - 96
PDE	SPE	
	STI	
1N4244	Δ♦FSC	244 - 46
IDC	SPE	
	THEF	
1N4245	CEN	254 -103
EDL	GDC	
♦GESY	♦GIC	
HTN	IDC	
MSC	SCN	
SLD	SPE	
♦SSI	SST	
♦UNI	UPI	
	WAB	
1N4246	ASI	255 - 19
CEN	EDL	
GDC	♦GESY	
♦GIC	HTN	
IDC	MSC	
SCN	SLD	
♦SSI	SST	
cont.next page		

Δ-Registered with JEDEC by this manufacturer

♦-Mfr's data sheet available in microfilm service

1. TYPE No. CROSS INDEX

IN TYPE NUMBER SEQUENCE

TYPE No.	MFRS	Pg&Line
1N4246		
(cont.)	♦UNI	
UPI	WAB	
1N4247	ASI	255 -143
CEN	EDL	
GDC	♦GESY	
♦GIC	HTN	
IDC	MSC	
SCN	SLD	
SPE	♦SSI	
SST	♦UNI	
	WAB	
1N4248	CEN	255 -219
EDL	ETC	
GDC	♦GESY	
♦GIC	HTN	
IDC	MSC	
SCN	SLD	
♦SSI	SST	
	♦UNI	
1N4249	CEN	256 - 73
EDL	GDC	401 -190
♦GESY	♦GIC	
HTN	IDC	
MSC	SCN	
SLD	SPE	
♦SSI	SST	
	TRWS	
1N4250	CEN	255 -220
ETC	IDC	
SCN	SLD	
SPE	♦SSI	
	SST	
1N4251	CEN	256 - 74
ETC	IDC	
SCN	SLD	
♦SSI	SST	
1N4252	CEN	256 - 95
IDC	SCN	
SLD	♦SSI	
	SST	
1N4253	CEN	256 -118
IDC	SCN	
SLD	♦SSI	
	SST	
1N4254	CEN	256 -119
♦CODI	IDC	
♦MSC	SCN	
SLD	♦SSI	
	SST	
1N4255	CEN	256 -146
♦CODI	IDC	
♦MSC	SCN	
SLD	♦SSI	
1N4256	CEN	256 -166
♦CODI	IDC	
♦MSC	SCN	
SLD	♦SSI	
1N4257	CEN	256 -184
♦CODI	IDC	
♦MSC	SCN	
SLD	♦SSI	
1N4258	ΔDII	379 - 68
SCN	UTX	
1N4258A	ΔDII	379 - 59
	UTX	
1N4258B	ΔDII	379 - 47
	UTX	
1N4259	ΔDII	379 -199
SCN	UTX	
1N4259A	ΔDII	379 -190
	UTX	
1N4259B	ΔDII	379 -180
	UTX	
1N4260	ΔDII	380 -108
SCN	UTX	
1N4260A	ΔDII	380 - 99
	UTX	
1N4260B	ΔDII	380 - 87
	UTX	
1N4261	ΔDII	381 - 29
SCN	UTX	
1N4261A	ΔDII	381 - 19
	UTX	
1N4261B	ΔDII	381 - 7
	UTX	
1N4262	ΔDII	381 -139
IDC	SCN	
	UTX	
1N4262A	ΔDII	381 -129
IDC	UTX	
1N4262B	ΔDII	381 -114
IDC	UTX	
1N4263	ΔDII	382 - 27
SCN	UTX	
1N4263A	ΔDII	382 - 17
	UTX	
1N4263B	ΔDII	382 - 5
	UTX	
1N4264	ΔDII	382 -149
SCN	UTX	
1N4264A	ΔDII	382 -138
	UTX	
1N4264B	ΔDII	382 -122
	UTX	
1N4265	ΔDII	383 - 56
SCN	UTX	
1N4265A	ΔDII	383 - 45
	UTX	
1N4265B	ΔDII	383 - 32
	UTX	
1N4266	ΔDII	384 - 34
IDC	SCN	
	UTX	
1N4266A	ΔDII	384 - 22
IDC	UTX	
1N4266B	ΔDII	384 - 6
IDC	UTX	
1N4267	ΔDII	384 -131
IDC	SCN	
	UTX	
1N4267A	ΔDII	384 -119
IDC	UTX	
1N4267B	ΔDII	384 -105
IDC	UTX	
1N4268	ΔDII	385 - 97
IDC	SCN	
	UTX	
1N4268A	ΔDII	385 - 84
IDC	UTX	
1N4268B	ΔDII	385 - 69
IDC	UTX	
1N4269	ΔDII	386 - 44
IDC	SCN	
	UTX	
1N4269A	ΔDII	386 - 32
IDC	UTX	
1N4269B	ΔDII	386 - 19
IDC	UTX	
1N4270	ΔDII	386 -151
SCN	UTX	
1N4270A	ΔDII	386 -139
	UTX	
1N4270B	ΔDII	386 -124
	UTX	
1N4271	ΔDII	387 - 66
IDC	SCN	
	UTX	
1N4271A	ΔDII	387 - 54
IDC	UTX	
1N4271B	ΔDII	387 - 40
IDC	UTX	
1N4272	ΔDII	388 - 8
SCN	SPE	
	UTX	
1N4272A	ΔDII	387 -198
	UTX	
1N4272B	ΔDII	387 -182
	UTX	
1N4273	ΔDII	388 -124
SCN	UTX	
1N4273A	ΔDII	388 -112
	UTX	
1N4273B	ΔDII	388 -100
	UTX	
1N4274	ΔDII	389 - 33
SCN	UTX	
1N4274A	ΔDII	389 - 21
	UTX	
1N4274B	ΔDII	389 - 6
	UTX	
1N4275	ΔDII	389 -142
SCN	UTX	
1N4275A	ΔDII	389 -130
	UTX	
1N4275B	ΔDII	389 -117
	UTX	
1N4276	ΔDII	390 - 34
SCN	UTX	
1N4276A	ΔDII	390 - 23
	UTX	
1N4276B	ΔDII	390 - 10
1N4277	ΔDII	390 -141
SCN	UTX	
1N4277A	ΔDII	390 -130
	UTX	
1N4277B	ΔDII	390 -118
	UTX	
1N4278	ΔDII	391 - 76
SCN	UTX	
1N4278A	ΔDII	391 - 65
	UTX	
1N4278B	ΔDII	391 - 52
SPE	UTX	
1N4279	ΔDII	392 - 7
SCN	UTX	
1N4279A	ΔDII	391 -200
	UTX	
1N4279B	ΔDII	391 -188
	UTX	
1N4280	ΔDII	392 -134
SCN	UTX	
1N4280A	ΔDII	392 -122
SPE	UTX	
1N4280B	ΔDII	392 -108
	UTX	
1N4281	ΔDII	393 - 46
SCN	UTX	
1N4281A	ΔDII	393 - 35
	UTX	
1N4281B	ΔDII	393 - 23
	UTX	
1N4282	ΔDII	393 -140
SCN	UTX	
1N4282A	ΔDII	393 -129
	UTX	
1N4282B	ΔDII	393 -116
	UTX	
1N4283	ΔDII	394 - 61
SCN	UTX	
1N4283A	ΔDII	394 - 49
	UTX	
1N4283B	ΔDII	394 - 36
1N4284A	ΔDII	394 -156
1N4284B	ΔDII	394 -143
	UTX	
1N4285	ΔDII	395 - 75
SCN	UTX	
1N4285A	ΔDII	395 - 64
	UTX	
1N4285B	ΔDII	395 - 52
	UTX	
1N4286	ΔDII	395 -184
SCN	UTX	
1N4286A	ΔDII	395 -173
	UTX	
1N4286B	ΔDII	395 -159
	UTX	
1N4287	ΔDII	396 -102
SCN	UTX	
1N4287A	ΔDII	396 - 91
	UTX	
1N4287B	ΔDII	396 - 79
	UTX	
1N4288	ΔDII	396 -189
SCN	UTX	
1N4288A	ΔDII	396 -178
	UTX	
1N4288B	ΔDII	396 -166
	UTX	
1N4289	ΔDII	397 - 78
SCN	UTX	
1N4289A	ΔDII	397 - 67
	UTX	
1N4289B	ΔDII	397 - 55
	UTX	
1N4290	ΔDII	398 - 21
SCN	UTX	
1N4290A	ΔDII	398 - 10
	UTX	
1N4290B	ΔDII	397 -193
	UTX	
1N4291	ΔDII	398 - 98
SCN	UTX	
1N4291A	ΔDII	398 - 89
	UTX	
1N4291B	ΔDII	398 - 80
	UTX	
1N4292	ΔDII	399 - 24
SCN	UTX	
1N4292A	ΔDII	399 - 14
	UTX	
1N4292B	ΔDII	399 - 5
	UTX	
1N4293	ΔDII	399 -120
SCN	UTX	
1N4293A	ΔDII	399 -111
	UTX	
1N4293B	ΔDII	399 -102
	UTX	
1N4295	ΔMSC	187 - 25
CDI	CODI	
GSE	IDC	
1N4295A	CODI	187 - 18
GSE	IDC	
	SPE	
1N4296	ΔMSC	187 -157
GSE	IDC	
1N4296A	GSE	187 -155
	IDC	
1N4297	♦GSE	380 -151
IDC	WAB	
1N4297A	ΔMSC	380 -152
♦GSE	IDC	
1N4297B	♦GSE	380 -153
	IDC	
1N4298	♦GSE	380 -154
	IDC	
1N4298A	ΔMSC	380 -155
♦GSE	IDC	
1N4298B	♦GSE	380 -156
	IDC	
1N4299	♦GSE	382 - 58
	IDC	
1N4299A	♦GSE	382 - 59
	IDC	
1N4299B	♦GSE	382 - 60
	IDC	
1N4300	♦GSE	382 - 61
	IDC	
1N4300A	♦GSE	382 - 62
	IDC	
1N4300B	♦GSE	382 - 63
IDC	SPE	
1N4301	ΔMSC	380 -157
	IDC	
1N4301A	IDC	380 -158
1N4301B	ΔMSC	380 -159
	IDC	
1N4302	ΔMSC	380 -160
	IDC	
1N4302A	ΔMSC	380 -161
	IDC	
1N4302B	IDC	380 -162
1N4303	IDC	382 - 64
1N4303A	IDC	382 - 65
1N4303B	IDC	382 - 66
1N4304	IDC	382 - 67
1N4304A	IDC	382 - 68
1N4304B	IDC	382 - 69
1N4305	♦APD	246 -111
ASI	CEN	
FSC	HITJ	
IDC	♦ITTG	
MSC	SCE	
SLD	SPE	
SST	SSY	
STI	THEF	
♦UNI	WAB	
1N4306	ASI	271 -104
CEI	CODI	
cont.next col.		
1N4306		
(cont.)	♦FSC	
GTC	IDC	
IDI	PDE	
SCA	SPE	
SSI	STI	
	WAB	
1N4307	ASI	271 -105
CEI	CODI	
♦FSC	GTC	
IDC	IDI	
PDE	SCA	
SPE	SSI	
STI	WAB	
1N4308	CEN	246 -212
IDC	MDC	
MSC	SCE	
	STI	
1N4309	IDC	245 -134
MDC	MSC	
1N4310	IDC	246 - 64
MDC	MSC	
1N4311	ASI	246 -213
IDC	MDC	
MSC	WAB	
1N4312	IDC	247 -101
MDC	SCE	
SPE	SSI	
1N4313	IDC	247 - 14
	SSI	
1N4314	IDC	246 -172
	SSI	
1N4315	IDC	245 - 61
	SSI	
1N4316	IDC	246 - 25
1N4317	IDC	246 -173
	SSI	
1N4318	IDC	247 - 91
	SSI	
1N4319	IDC	246 -178
	SSI	
1N4321	MSC	213 -166
SSI	TRWS	
1N4322	IDC	245 -201
MSC	SSI	
1N4323	GDC	178 -143
IDC	MSC	
1N4323A	IDC	178 -131
	MSC	
1N4323B	IDC	178 - 98
1N4324	GDC	180 -136
	IDC	
1N4324A	IDC	180 -123
	MSC	
1N4324B	IDC	180 - 91
1N4325	GDC	182 -124
	IDC	
1N4325A	IDC	182 -111
	MSC	
1N4325B	IDC	182 - 76
1N4326	GDC	185 -152
IDC	MSC	
1N4326A	GDC	185 -140
	IDC	
1N4326B	GDC	185 -107
IDC	MSC	
1N4327	GDC	188 - 11
IDC	MSC	
1N4327A	IDC	187 -205
	MSC	
1N4327B	IDC	187 -165
MSC	SPE	
1N4328	GDC	189 -125
IDC	MSC	
1N4328A	IDC	189 -112
	MSC	
1N4328B	IDC	189 - 78
1N4329	GDC	191 -100
IDC	MSC	
	SPE	
1N4329A	IDC	191 - 85
	MSC	
1N4329B	IDC	191 - 45
MSC	SPE	
1N4330	GDC	193 - 44
IDC	MSC	
1N4330A	IDC	193 - 30
1N4330B	IDC	192 -211
1N4331	GDC	195 - 99
IDC	MSC	
1N4331A	IDC	195 - 83
	MSC	
1N4331B	IDC	195 - 45
1N4332	GDC	196 -188
	IDC	
1N4332A	IDC	196 -173
	MSC	
1N4332B	IDC	196 -140
	MSC	
1N4333	GDC	198 -207
IDC	MSC	
1N4333A	IDC	198 -191
	MSC	
1N4333B	IDC	198 -156
	MSC	
1N4334	GDC	200 -197
IDC	MSC	
1N4334A	GDC	200 -182
	IDC	
1N4334B	GDC	200 -149
	IDC	
1N4335	GDC	202 - 97
IDC	MSC	
1N4335A	IDC	202 - 82
	MSC	
1N4335B	IDC	202 - 47
	MSC	
1N4336	GDC	203 -192
	IDC	
1N4336A	IDC	203 -178
MSC	SPE	
1N4336B	IDC	203 -145
	MSC	
1N4337	GDC	205 -135
	IDC	
1N4337A	IDC	205 -120
	MSC	
1N4337B	IDC	205 - 84
1N4338	GDC	207 - 59
IDC	MSC	
	WAB	
1N4338A	IDC	207 - 44
	MSC	
1N4338B	IDC	207 - 9
1N4339	GDC	208 -152
	IDC	
1N4339A	IDC	208 -138
1N4339B	IDC	208 -102
1N4340	GDC	210 - 4
	IDC	
1N4340A	IDC	209 -195
1N4340B	IDC	209 -168
MSC	SPE	
1N4341	GDC	211 - 41
IDC	MSC	
1N4341A	IDC	211 - 30
1N4341B	IDC	211 - 5
	MSC	
1N4342	GDC	212 - 50
IDC	MSC	
1N4342A	IDC	212 - 39
	MSC	
1N4342B	IDC	212 - 17
1N4343	GDC	213 - 66
IDC	MSC	
1N4343A	IDC	213 - 55
	MSC	
1N4343B	IDC	213 - 34
	MSC	
1N4344	GDC	214 - 61
	IDC	
1N4344A	IDC	214 - 51
1N4344B	IDC	214 - 32
1N4345	GDC	215 - 51
	IDC	
1N4345A	IDC	215 - 39
	MSC	
1N4345B	IDC	215 - 18
	MSC	
1N4346	GDC	216 - 55
IDC	MSC	
	SPE	
1N4346A	IDC	216 - 44
	MSC	
1N4346B	IDC	216 - 24
1N4347	GDC	217 - 36
IDC	MSC	
1N4347A	IDC	217 - 25
	MSC	
1N4347B	IDC	217 - 5
1N4348	GDC	218 - 19
IDC	MSC	
	SPE	
1N4348A	IDC	218 - 7
	MSC	
1N4348B	IDC	217 -187
	MSC	
1N4349	GDC	218 -198
IDC	MSC	
1N4349A	IDC	218 -187
1N4349B	IDC	218 -167
	MSC	
1N4350	GDC	219 -177
	IDC	
1N4350A	IDC	219 -166
1N4350B	IDC	219 -149
	MSC	
1N4351	GDC	220 -139
IDC	MSC	
1N4351A	IDC	220 -127
1N4351B	IDC	220 -108
	MSC	
1N4352	GDC	221 -102
IDC	MSC	
1N4352A	GDC	221 - 90
IDC	MSC	
1N4352B	GDC	221 - 73
	IDC	
1N4353	GDC	222 - 55
	IDC	
1N4353A	IDC	222 - 41
1N4353B	IDC	222 - 24
1N4354	GDC	223 - 9
	IDC	
1N4354A	IDC	222 -185
	MSC	
1N4354B	IDC	222 -169
	MSC	
1N4355	GDC	224 - 42
	IDC	
1N4355A	IDC	224 - 29
	MSC	
1N4355B	IDC	224 - 13
	MSC	
1N4356	GDC	224 -172
	IDC	

Δ-Registered with JEDEC by this manufacturer

♦-Mfr's data sheet available in microfilm service

1. TYPE No. CROSS INDEX

IN TYPE NUMBER SEQUENCE

TYPE No.	MFRS	Pg&Line
1N4356A	IDC	224 -161
	MSC	
1N4356B	IDC	224 -146
	MSC	
1N4357	GDC	226 - 1
IDC	MSC	
1N4357A	IDC	225 -169
	MSC	
1N4357B	IDC	225 -151
	MSC	
1N4358	GDC	226 -183
IDC	MSC	
1N4358A	IDC	226 -171
1N4358B	IDC	226 -155
	MSC	
1N4360	CEN	164 - 19
CODI	IDC	
KSI	MSC	
SIEG	SSI	
	WAB	
1N4361	CEN	277 - 72
ETC	IDC	
SLD	SSI	
SST	STI	
1N4362	CEN	163 - 23
IDC	SSI	
1N4363	IDC	247 - 95
MSC	SSI	
1N4364	CEI	278 - 24
CEN	ETC	
HTN	IDC	
SCN	SLCB	
SSI	SSY	
	UPI	
1N4365	ASI	278 - 64
CEI	CEN	
ETC	HTN	
IDC	SCN	
SLCB	SSI	
	WAB	
1N4366	CEI	278 -108
CEN	ETC	
HTN	IDC	
SCN	SLCB	
SSI	UPI	
1N4367	CEI	278 -146
CEN	ETC	
HTN	IDC	
SCN	SLCB	
SPE	SSI	
	UPI	
1N4368	CEI	278 -181
CEN	ETC	
HTN	IDC	
SCN	SLCB	
	SSI	
1N4369	CEI	278 -217
CEN	ETC	
HTN	IDC	
SCN	SLCB	
	SSI	
1N4370	Δ♦MOTA	164 - 37
CODI	GDC	
HTN	IDC	
KSI	MDC	
♦MSC	SIEG	
SLD	SPE	
SPR	SST	
	TRWS	
1N4370A	Δ♦MOTA	164 - 28
CODI	HTN	
IDC	♦INC	
KSI	MDC	
♦MSC	♦SIEG	
SLD	SPE	
SST	THEF	
TRWS	UPI	
1N4371	Δ♦MOTA	164 -154
CODI	GDC	
HTN	IDC	
KSI	MDC	
♦MSC	♦SIEG	
SLD	SPE	
SPR	SST	
TRWS	WAB	
1N4371A	Δ♦MOTA	164 -143
CODI	HTN	
IDC	♦INC	
KSI	MDC	
♦MSC	♦SIEG	
SLD	SPE	
SST	THEF	
TRWS	WAB	
1N4372	Δ♦MOTA	165 - 86
CODI	GDC	
HTN	IDC	
KSI	♦MSC	
♦SIEG	SLD	
SPE	SPR	
SST	THEF	
TRWS	WAB	
1N4372A	Δ♦MOTA	165 - 69
CODI	HTN	
IDC	♦INC	
KSI	♦MSC	
♦SIEG	SLD	
SPE	SST	
THEF	TRWS	
	WAB	
1N4374	SCN	411 - 55
1N4375	IDC	246 - 36
	SPE	
1N4376	Δ♦FSC	244 - 47
	IDC	
	SCN	

TYPE No.	MFRS	Pg&Line
1N4377	EDI	417 -147
	SCN	
1N4380	IDC	257 - 83
SCE	SSI	
1N4381	IDC	241 - 65
	SSI	
1N4382	MSC	246 - 21
1N4383	ASI	280 -211
CEN	CODI	
ETC	HTN	
♦ITTG	SAR	
SCN	SLD	
SPE	SSI	
STR	THEF	
UPI	WAB	
1N4384	ASI	281 -116
CEN	CODI	
ETC	HTN	
IDC	♦ITTG	
SAR	SCN	
SLD	SPE	
SSI	THEF	
UPI	WAB	
1N4385	ASI	282 - 5
CEN	CODI	
ETC	HTN	
♦ITTG	SAR	
SCN	SLD	
SPE	SSI	
SST	STR	
THEF	UPI	
	WAB	
1N4389	CEN	231 - 42
ETC	IDC	
	UPI	
1N4390	IDC	244 -140
SPE	SSI	
1N4391	IDC	244 -141
	SSI	
1N4392	IDC	244 - 92
SPE	SSI	
1N4400	♦APD	178 -144
CEN	IDC	
	SCN	
1N4400A	♦APD	178 -132
CEN	IDC	
	SCN	
1N4400B	♦APD	178 - 99
CEN	IDC	
	SCN	
1N4401	♦APD	180 -137
CEN	IDC	
SCN	SPE	
1N4401A	♦APD	180 -124
CEN	IDC	
	SCN	
1N4401B	♦APD	180 - 92
CEN	IDC	
	SCN	
1N4402	♦APD	182 -125
CEN	IDC	
	SCN	
1N4402A	♦APD	182 -112
CEN	IDC	
	SCN	
1N4402B	♦APD	182 - 77
CEN	IDC	
	SCN	
1N4403	♦APD	185 -153
CEN	IDC	
	SCN	
1N4403A	♦APD	185 -141
CEN	IDC	
	SCN	
1N4403B	♦APD	185 -108
CEN	IDC	
	SCN	
1N4404	♦APD	188 - 12
CEN	IDC	
	SCN	
1N4404A	♦APD	187 -206
CEN	IDC	
	SCN	
1N4404B	♦APD	187 -166
CEN	IDC	
	SCN	
1N4405	♦APD	189 -126
CEN	IDC	
SCN	SPE	
	WAB	
1N4405A	♦APD	189 -113
CEN	IDC	
	SCN	
1N4405B	♦APD	189 - 79
CEN	IDC	
	SCN	
1N4406	♦APD	191 -101
CEN	IDC	
SCN	SPE	
1N4406A	♦APD	191 - 86
CEN	IDC	
	SCN	
1N4406B	♦APD	191 - 46
CEN	IDC	
	SCN	
1N4407	♦APD	193 - 45
CEN	IDC	
SCN	SPE	
1N4407A	♦APD	193 - 31
CEN	IDC	
	SCN	
1N4407B	♦APD	192 -212
CEN	IDC	
	SCN	

TYPE No.	MFRS	Pg&Line
1N4408	♦APD	195 -100
CEN	IDC	
SCN	SPE	
	WAB	
1N4408A	♦APD	195 - 84
CEN	IDC	
	SCN	
1N4408B	♦APD	195 - 46
CEN	IDC	
	SCN	
1N4409	♦APD	196 -189
CEN	IDC	
	SCN	
1N4409A	CEN	196 -174
	SCN	
1N4409B	SCN	196 -141
1N4410	♦APD	198 -208
CEN	IDC	
SCN	SPE	
1N4410A	♦APD	198 -192
CEN	IDC	
	SCN	
1N4410B	♦APD	198 -157
CEN	IDC	
	SCN	
1N4411	♦APD	200 -198
CEN	IDC	
	SCN	
1N4411A	♦APD	200 -183
CEN	IDC	
	SCN	
1N4411B	♦APD	200 -150
CEN	IDC	
	SCN	
1N4412	♦APD	202 - 98
CEN	IDC	
	SCN	
1N4412A	♦APD	202 - 83
CEN	IDC	
	SCN	
1N4412B	♦APD	202 - 48
CEN	IDC	
	SCN	
1N4413	♦APD	203 -193
CEN	IDC	
	SCN	
1N4413A	♦APD	203 -179
CEN	IDC	
	SCN	
1N4413B	♦APD	203 -146
CEN	IDC	
	SCN	
1N4414	♦APD	205 -136
CEN	IDC	
SCN	SPE	
1N4414A	♦APD	205 -121
CEN	IDC	
	SCN	
1N4414B	♦APD	205 - 85
CEN	IDC	
	SCN	
1N4415	♦APD	207 - 60
CEN	IDC	
	SCN	
1N4415A	APD	207 - 45
CEN	SCN	
1N4415B	APD	207 - 10
	SCN	
1N4416	♦APD	208 -153
CEN	IDC	
SCN	SPE	
1N4416A	♦APD	208 -139
CEN	IDC	
SCN	SPE	
1N4416B	♦APD	208 -103
CEN	IDC	
	SCN	
1N4417	♦APD	210 - 5
CEN	IDC	
	SCN	
1N4417A	♦APD	209 -196
CEN	IDC	
	SCN	
1N4417B	♦APD	209 -169
CEN	IDC	
	SCN	
1N4418	♦APD	211 - 42
CEN	IDC	
SCN	SPE	
1N4418A	♦APD	211 - 31
CEN	IDC	
	SCN	
1N4418B	♦APD	211 - 6
CEN	IDC	
	SCN	
1N4419	♦APD	212 - 51
CEN	IDC	
	SCN	
1N4419A	♦APD	212 - 40
CEN	IDC	
	SCN	
1N4419B	♦APD	212 - 18
CEN	IDC	
	SCN	
1N4420	♦APD	213 - 67
CEN	IDC	
	SCN	
1N4420A	♦APD	213 - 56
CEN	IDC	
	SCN	
1N4420B	♦APD	213 - 35
CEN	IDC	
	SCN	

TYPE No.	MFRS	Pg&Line
1N4421	♦APD	214 - 62
CEN	IDC	
	SCN	
1N4421A	CEN	214 - 52
	SCN	
1N4421B	SCN	214 - 33
1N4422	♦APD	215 - 52
CEN	IDC	
	SCN	
1N4422A	♦APD	215 - 40
CEN	IDC	
	SCN	
1N4422B	♦APD	215 - 19
CEN	IDC	
	SCN	
1N4423	♦APD	216 - 56
CEN	IDC	
	SCN	
1N4423A	♦APD	216 - 45
CEN	IDC	
	SCN	
1N4423B	♦APD	216 - 25
CEN	IDC	
SCN	SPE	
1N4424	♦APD	217 - 37
CEN	IDC	
	SCN	
1N4424A	♦APD	217 - 26
CEN	IDC	
	SCN	
1N4424B	♦APD	217 - 6
CEN	IDC	
	SCN	
1N4425	♦APD	218 - 20
CEN	IDC	
	SCN	
1N4425A	APD	218 - 8
CEN	IDC	
	SCN	
1N4425B	APD	217 -188
CEN	IDC	
	SCN	
1N4426	♦APD	218 -199
CEN	IDC	
SCN	SPE	
1N4426A	APD	218 -188
CEN	IDC	
	SCN	
1N4426B	APD	218 -168
CEN	IDC	
	SCN	
1N4427	CEN	219 -178
IDC	SCN	
1N4427A	CEN	219 -167
	SCN	
1N4427B	SCN	219 -150
1N4428	CEN	220 -140
IDC	SCN	
1N4428A	CEN	220 -128
IDC	SCN	
1N4428B	CEN	220 -109
IDC	SCN	
1N4429	CEN	221 -103
IDC	SCN	
1N4429A	CEN	221 - 91
IDC	SCN	
1N4429B	CEN	221 - 74
IDC	SCN	
1N4430	CEN	222 - 56
IDC	SCN	
1N4430A	CEN	222 - 42
IDC	SCN	
1N4430B	CEN	222 - 25
IDC	SCN	
1N4431	CEN	223 - 10
IDC	SCN	
1N4431A	CEN	222 -186
IDC	SCN	
1N4431B	CEN	222 -170
IDC	SCN	
1N4432	CEN	224 - 43
IDC	SCN	
1N4432A	CEN	224 - 30
IDC	SCN	
1N4432B	CEN	224 - 14
IDC	SCN	
1N4433	CEN	224 -173
IDC	SCN	
1N4434	CEN	226 - 2
IDC	SCN	
1N4434A	CEN	225 -170
IDC	SCN	
1N4434B	CEN	225 -152
IDC	SCN	
1N4435	CEN	226 -184
IDC	SCN	
1N4435A	CEN	226 -172
IDC	SCN	
1N4435B	CEN	226 -156
IDC	SCN	
1N4436	UPI	367 -197
	♦VARO	
1N4437	♦VARO	368 - 18
1N4438	UPI	368 - 56
	♦VARO	
1N4441	ΔVARO	241 -136
1N4444	Δ♦GESY	246 - 55
ASI	CEN	
GDC	HTN	
IDC	MSC	
SCE	SLD	
SST	SSY	
THEF	♦UNI	
	WAB	

TYPE No.	MFRS	Pg&Line
1N4445	CEN	247 - 97
	THEF	
1N4446	Δ♦GESY	247 - 52
♦ALGG	♦APD	
♦APX	ASI	
CEN	FSC	
GDC	HITJ	
HTN	IDC	
INC	♦ITTG	
MISI	MSC	
♦MULB	♦PHIN	
RHM	RHMJ	
♦RTCF	SCE	
♦SLCB	SLD	
SPE	SST	
STI	THEF	
♦UNI	UPI	
♦VALG	WAB	
1N4447	Δ♦GESY	247 - 53
♦ALGG	♦APD	
ASI	CEN	
FSC	GDC	
HITJ	HTN	
IDC	INC	
♦ITTG	MSC	
RHM	RHMJ	
SCE	SLCB	
SLD	SPE	
SPR	SST	
SSY	STI	
THEF	♦UNI	
	WAB	
1N4448	Δ♦GESY	247 - 54
♦ALGG	♦APD	
♦APX	CEN	
FSC	GDC	
HITJ	HTN	
IDC	INC	
♦ITTG	MISI	
MSC	♦MULB	
♦PHIN	RHM	
RHMJ	♦RTCF	
SCE	♦SLCB	
SLD	SPE	
SST	STI	
THEF	♦UNI	
UPI	♦VALG	
	WAB	
1N4449	Δ♦GESY	247 - 55
♦ALGG	♦APD	
ASI	CEN	
FSC	GDC	
HITJ	HTN	
IDC	INC	
♦ITTG	MISI	
MSC	♦MULB	
♦PHIN	RHM	
RHMJ	♦RTCF	
SCE	♦SLCB	
SLD	SST	
STI	THEF	
♦UNI	VALG	
	WAB	
1N4450	Δ♦GESY	245 - 77
♦APD	ASI	
CEN	♦FSC	
GDC	HITJ	
HTN	IDC	
♦ITTG	MSC	
RHM	RHMJ	
SCE	SLD	
SST	STI	
THEF	TIC	
♦UNI	WAB	
1N4451	Δ♦GESY	245 -103
♦APD	ASI	
GDC	HTN	
IDC	♦ITTG	
MSC	SCE	
SLD	SST	
STI	♦UNI	
	WAB	
1N4452	♦APD	251 -204
ASI	GDC	
HTN	IDC	
SCE	SLD	
♦UNI	WAB	
1N4453	ASI	231 - 28
CODI	GDC	
♦GESY	HTN	
IDC	♦ITTG	
SCE	SLD	
SST	SSY	
♦UNI	WAB	
1N4454	Δ♦GESY	246 -112
♦APD	ASI	
CEN	♦FSC	
GDC	HITJ	
HTN	IDC	
INC	♦ITTG	
MISI	MSC	
RHM	RHMJ	
SLD	SPE	
SST	SSY	
STI	THEF	
♦UNI	WAB	
1N4455	ETC	231 - 30
IDC	UPI	
1N4456	IDC	251 -133
	UPI	
1N4457	IDC	251 -134
1N4458	ASI	291 - 78
CEI	CEN	
cont.next page		

Δ-Registered with JEDEC by this manufacturer

♦-Mfr's data sheet available in microfilm service

1. TYPE No. CROSS INDEX

IN TYPE NUMBER SEQUENCE

TYPE No.	MFRS	Pg&Line
1N4458 (cont.)	EDL	
	ETC	
	HSE	
	IDI	
	SAR	
	SOD	
	SSI	
	WAB	
1N4459	ASI	402 -215
	CEI	
	EDL	
	ETC	
	GTC	
	HSE	
	IDC	
	IDI	
	PRX	
	SAR	
	SCN	
	SOD	
	SSI	
	WAB	
1N4460	CEN	175 -157
	MSC	
	SCE	
1N4461	CEN	178 -159
	IDC	
	MSC	
	SCE	♦UNI
1N4462	CEN	180 -151
	IDC	♦MSC
	SCE	♦UNI
1N4463	CEN	182 -140
	IDC	♦MSC
	SCE	♦UNI
1N4464	CEN	185 -172
	IDC	♦MSC
	SCE	♦UNI
1N4465	CEN	188 - 33
	♦MSC	
	SCE	
	SPE	♦UNI
1N4466	CEN	189 -147
	IDC	♦MSC
	SCE	♦UNI
1N4467	CEN	191 -122
	♦MSC	
	SCE	
	♦UNI	
1N4468	CEN	193 - 64
	♦MSC	
	SCE	
	♦UNI	
1N4469	CEN	195 -119
	♦MSC	
	SCE	
	♦UNI	
1N4470	CEN	197 - 2
	♦MSC	
	SCE	
	♦UNI	
1N4471	CEN	199 - 18
	♦MSC	
	SCE	
	♦UNI	
1N4472	CEN	201 - 11
	♦MSC	
	SCE	
	♦UNI	
1N4473	CEN	202 -118
	♦MSC	
	SCE	
	♦UNI	
1N4474	CEN	204 - 4
	♦MSC	
	SCE	
	♦UNI	
1N4475	CEN	205 -158
	♦MSC	
	SCE	
	♦UNI	
1N4476	CEN	207 - 82
	♦MSC	
	SCE	
	♦UNI	
1N4477	CEN	208 -175
	♦MSC	
	SCE	
	♦UNI	
1N4478	CEN	210 - 24
	♦MSC	
	SCE	
	♦UNI	
1N4479	CEN	211 - 61
	♦MSC	
	SCE	
	♦UNI	
1N4480	CEN	212 - 72
	♦MSC	
	SCE	
	♦UNI	
1N4481	CEN	213 - 89
	♦MSC	
	SCE	
	♦UNI	
1N4482	CEN	214 - 83
	♦MSC	
	SCE	
	♦UNI	
1N4483	CEN	215 - 72
	♦MSC	
	SCE	
	♦UNI	
1N4484	CEN	216 - 76
	♦MSC	
	SCE	
	♦UNI	
1N4485	CEN	217 - 57
	♦MSC	
	SCE	
	♦UNI	
1N4486	CEN	218 - 40
	♦MSC	
	SCE	
	♦UNI	
1N4487	CEN	219 - 17
	♦MSC	
	SCE	
	♦UNI	
1N4488	CEN	219 -195
	♦MSC	
	SCE	
	♦UNI	
1N4489	CEN	220 -159
	♦MSC	
	SCE	
	♦UNI	
1N4490	CEN	221 -119
	SCE	
1N4491	CEN	222 - 73
	SCE	
1N4492	CEN	223 - 26
	SCE	
1N4493	CEN	224 - 60
	SCE	
1N4494	CEN	224 -186
	♦MSC	
	SCE	
1N4495	CEN	226 - 18
	SCE	
1N4496	CEN	227 - 12
	SCE	
1N4497	SSI	412 - 34
1N4498	SSI	419 -129
1N4499	IDC	175 -118
1N4500	CEN	246 -179
	IDC	
	MSC	
	SSY	
	STI	
	WAB	
1N4501	CODI	179 - 17
	IDC	
	UPI	
1N4502	CEI	231 - 53
	CEN	
	IDC	
	MDC	
	SSY	
	UPI	
	WAB	
1N4503	TRWS	209 - 12
1N4504	TRWS	227 - 49
1N4505	♦CODI	424 -158
	SPE	
	SSI	
1N4506	CEN	295 - 29
	EDL	
	ETC	
	HSE	
	IDC	
	SAR	
	SCN	
	SSI	
	SST	
	UPI	
	WAB	
1N4507	CEN	295 - 82
	EDL	
	ETC	
	HSE	
	IDC	
	SAR	
	SCN	
	SPE	
	SSI	
	SST	
	UPI	
	WAB	
1N4508	CEN	295 -129
	EDL	
	ETC	
	HSE	
	IDC	
	SAR	
	SCN	
	SPE	
	SSI	
	SST	
	UPI	
	WAB	
1N4509	CEN	295 -165
	EDL	
	ETC	
	HSE	
	IDC	
	SCN	
	SPE	
	SSI	
	SST	
	UPI	
	WAB	
1N4510	CEN	403 - 67
	EDL	
	ETC	
	HSE	
	IDC	
	♦NAT	
	SCN	
	SSI	
	SST	
	UPI	
	WAB	
1N4511	CEN	406 -178
	EDL	
	ETC	
	HSE	
	IDC	
	♦NAT	
	SCN	
	SPE	
	SSI	
	SST	
	UPI	
	WAB	
1N4512	SSI	231 - 93
1N4513	EDI	415 - 2
	STI	
1N4514	CEN	282 -142
	EDI	
	ETC	
	HSE	
	IDC	
	STI	
1N4517	ΔSOD	254 -104
	CEN	
	ETC	
	HSE	
	SPE	
	♦SSI	
	STI	
	UPI	
	WAB	
1N4523	IDC	244 -117
	MISI	
	SSI	
	STI	
1N4524	IDC	244 - 56
	SCE	
	SSI	
	STI	
	UPI	
	WAB	
1N4525	CEN	301 - 4
	EDL	
	ETC	
	HSE	
	IDC	
	SAR	
	SSI	
	SST	
	UPI	
	WAB	
1N4526	CEN	301 - 19
	EDL	
	ETC	
	HSE	
	IDC	
	SAR	
	SSI	
	SST	
	UPI	
	WAB	
1N4527	CEN	301 - 31
	EDL	
	HSE	
	IDC	
	SAR	
	SSI	
	SST	
	WAB	
1N4528	CEN	301 - 37
	EDL	
	HSE	
	IDC	
	SPE	
	SSI	
	SST	
	WAB	
1N4529	CEN	403 -170
	EDL	
	HSE	
	IDC	
	♦NAT	
	SPE	
	SSI	
	SST	
	WAB	
1N4530	CEN	407 - 19
	EDL	
	HSE	
	IDC	
	♦NAT	
	SPE	
	SSI	
	SST	
	TIC	
	WAB	
1N4531	♦APD	246 -113
	♦APX	
	CEN	
	♦MSC	
	MULB	
	PHIN	
	RHMJ	
	RHMF	
	STI	
	THEF	
	♦UNI	
	VALG	
1N4532	♦APX	246 - 65
	CEN	
	HITJ	
	INC	
	♦MSC	
	MULB	
	PHIN	
	RHMJ	
	RTCF	
	VALG	
1N4533	CEN	245 - 62
	IDC	
	♦MSC	
	RHMJ	
	♦UNI	
1N4534	♦APD	245 -135
	CEN	
	IDC	
	♦MSC	
	RHMJ	
	SSY	
	♦UNI	
1N4535	ΔMSC	228 - 58
	CODI	
	IDC	
	SIEG	
1N4536	CEN	244 -174
	HITJ	
	IDC	
	INC	
	♦MSC	
	RHMJ	
1N4537	EDL	414 - 1
	SCN	
	SOD	
	SSI	
1N4538	EDL	417 - 14
	SCN	
	SOD	
	SSI	
1N4539	EDL	419 -160
	SCN	
	SSI	
1N4540	EDL	421 - 20
	SCN	
	SOD	
	SSI	
1N4541	ΔTRWS	236 -134
1N4542	ΔTRWS	236 -135
1N4543	TRWS	236 -136
1N4544	ΔTRWS	236 -137
1N4545	ΔTRWS	236 -138
1N4546	EDI	431 -150
1N4547	IDC	248 - 88
1N4548	IDC	244 -175
1N4549	ΔMSC	377 -123
	CEN	
	IDC	
	SCN	
	SIEG	
	SPE	
	SSI	
1N4549A	ΔMSC	377 -120
	CEN	
	IDC	
	♦MOTA	
	SCN	
	SSI	
1N4549B	Δ ♦MSC	377 -117
	CEN	
	IDC	
	♦MOTA	
	SCN	
	♦SIEG	
	SSI	
	WAB	
1N4550	ΔMSC	377 -161
	CEN	
	IDC	
	SCN	
	SIEG	
1N4550A	ΔMSC	377 -158
	CEN	
	IDC	
	♦MOTA	
	SCN	
1N4550B	Δ ♦MSC	377 -155
	CEN	
	IDC	
	♦MOTA	
	SCN	
	♦SIEG	
	WAB	
1N4551	ΔMSC	378 - 44
	CEN	
	ETC	
	IDC	
	SCN	
	SIEG	
1N4551A	ΔMSC	378 - 41
	CEN	
	ETC	
	IDC	
	♦MOTA	
	SCN	
1N4551B	Δ ♦MSC	378 - 38
	CEN	
	ETC	
	IDC	
	♦MOTA	
	SCN	
	♦SIEG	
1N4552	ΔMSC	378 - 87
	CEN	
	ETC	
	IDC	
	SCN	
	SIEG	
1N4552A	ΔMSC	378 - 84
	CEN	
	ETC	
	IDC	
	♦MOTA	
	SCN	
1N4552B	Δ ♦MSC	378 - 81
	CEN	
	ETC	
	IDC	
	♦MOTA	
	SCN	
	♦SIEG	
1N4553	ΔMSC	378 -134
	CEN	
	ETC	
	IDC	
	SCN	
	SIEG	
	SPE	
1N4553A	ΔMSC	378 -131
	CEN	
	ETC	
	IDC	
	♦MOTA	
	SCN	
1N4553B	Δ ♦MSC	378 -128
	CEN	
	ETC	
	IDC	
	♦MOTA	
	SCN	
	♦SIEG	
1N4554	ΔMSC	378 -188
	♦CEN	
	ETC	
	IDC	
	SCN	
	SIEG	
	SPE	
1N4554A	ΔMSC	378 -185
	CEN	
	ETC	
	IDC	
	♦MOTA	
	SCN	
1N4554B	Δ ♦MSC	378 -181
	CEN	
	ETC	
	IDC	
	♦MOTA	
	SCN	
	♦SIEG	
	SPE	
1N4555	ΔMSC	379 - 95
	CEN	
	ETC	
	IDC	
	SCN	
	SIEG	
1N4555A	ΔMSC	379 - 90
	CEN	
	ETC	
	IDC	
	♦MOTA	
	SCN	
1N4555B	Δ ♦MSC	379 - 83
	CEN	
	ETC	
	IDC	
	♦MOTA	
	SCN	
	♦SIEG	
1N4556	ΔMSC	380 - 18
	CEN	
	ETC	
	IDC	
	SCN	
	SIEG	
	SPE	
1N4556A	ΔMSC	380 - 13
	CEN	
	ETC	
	IDC	
	♦MOTA	
	SCN	
1N4556B	Δ ♦MSC	380 - 6
	CEN	
	ETC	
	IDC	
	♦MOTA	
	SCN	
	♦SIEG	
1N4557	ΔMSC	377 -124
	CEN	
	ETC	
	IDC	
	SCN	
	SIEG	
1N4557A	ΔMSC	377 -121
	CEN	
	ETC	
	IDC	
	♦MOTA	
	SAR	
	SCN	
1N4557B	Δ ♦MSC	377 -118
	CEN	
	ETC	
	IDC	
	♦MOTA	
	SCN	
	♦SIEG	
1N4558	ΔMSC	377 -162
	CEN	
	ETC	
	IDC	
	SAR	
	SCN	
	SIEG	
1N4558A	ΔMSC	377 -159
	CEN	
	ETC	
	IDC	
	♦MOTA	
	SAR	
	SCN	
1N4558B	Δ ♦MSC	377 -156
	CEN	
	ETC	
	IDC	
	♦MOTA	
	SAR	
	SCN	
	♦SIEG	
1N4559	ΔMSC	378 - 45
	CEN	
	ETC	
	IDC	
	SAR	
	SCN	
	SIEG	
	SPE	
1N4559A	ΔMSC	378 - 42
	CEN	
	ETC	
	IDC	
	♦MOTA	
	SAR	
	SCN	
1N4559B	Δ ♦MSC	378 - 39
	CEN	
	ETC	
	IDC	
	♦MOTA	
	SAR	
	SCN	
	♦SIEG	
1N4560	ΔMSC	378 - 88
	CEN	
	ETC	
	IDC	
	SAR	
	SCN	
	SIEG	
1N4560A	ΔMSC	378 - 85
	CEN	
	ETC	
	IDC	
	♦MOTA	
	SAR	
	SCN	
1N4560B	Δ ♦MSC	378 - 82
	CEN	
	ETC	
	IDC	
	♦MOTA	
	SAR	
	SCN	
	♦SIEG	
1N4561	ΔMSC	378 -135
	CEN	
	ETC	
	SAR	
	SCN	
	SIEG	
1N4561A	ΔMSC	378 -132
	CEN	
	ETC	
	♦MOTA	
	SAR	
	SCN	
1N4561B	Δ ♦MSC	378 -129
	CEN	
	ETC	
	MOTA	
	SAR	
	SCN	
	♦SIEG	
1N4562	ΔMSC	378 -189
	CEN	
	ETC	
	SAR	
	SCN	
	SIEG	
1N4562A	ΔMSC	378 -186
	CEN	
	ETC	
	♦MOTA	
	SAR	
	SCN	
1N4562B	Δ ♦MSC	378 -182
	CEN	
	ETC	
	♦MOTA	
	SAR	
	SCN	
	♦SIEG	
1N4563	ΔMSC	379 - 96
	CEN	
	ETC	
	SAR	
	SCN	
	SIEG	
	SPE	
1N4563A	ΔMSC	379 - 91
	CEN	
	ETC	
	♦MOTA	
	SAR	
	SCN	
1N4563B	Δ ♦MSC	379 - 84
	CEN	
	ETC	
	♦MOTA	
	SAR	
	SCN	
	♦SIEG	
1N4564	ΔMSC	380 - 19
	CEN	
	ETC	
	SAR	
	SCN	
	SIEG	
1N4564A	ΔMSC	380 - 14
	CEN	
	ETC	
	♦MOTA	
	SAR	
	SCN	
1N4564B	Δ ♦MSC	380 - 7
	CEN	
	ETC	
	♦MOTA	
	SCN	
	♦SIEG	
1N4565	Δ ♦MSC	176 -110
	♦APD	
	CDI	
	CODI	
	GSE	
	IDC	
	♦MOTA	
	SCE	
	♦SIEG	
	SPE	
	THEF	
	UTX	
	WAB	
1N4565A	Δ ♦MSC	176 -111
	♦APD	
	CDI	
	CODI	
	GSE	
	IDC	
	♦MOTA	
	SCE	
	♦SIEG	
	THEF	
	UTX	
	WAB	
1N4565B	CODI	176 - 43
	IDC	
	MSC	
	UTX	
1N4566	Δ ♦MSC	176 -112
	♦APD	
	CDI	
	CODI	
	GSE	
	IDC	
	♦MOTA	
	SCE	
	♦SIEG	
	THEF	
	UTX	
	WAB	
1N4566A	Δ ♦MSC	176 -113
	♦APD	
	CDI	
	CODI	
	GSE	
	IDC	
	♦MOTA	
	SCE	
	♦SIEG	
	THEF	
	UTX	
	WAB	
1N4566B	CODI	176 - 44
	IDC	
	MSC	
	UTX	
1N4567	Δ ♦MSC	176 -114
	♦APD	
	CDI	
	CODI	
	GSE	
	IDC	
	♦MOTA	
	SCE	
	♦SIEG	
	THEF	
	UTX	
1N4567A	Δ ♦MSC	176 -115
	♦APD	
	CDI	
	CODI	
	GSE	
	IDC	
	♦MOTA	
	SCE	
	♦SIEG	
	THEF	
	UTX	
	WAB	
1N4567B	CODI	176 - 45
	IDC	
	MSC	
	UTX	
1N4568	Δ ♦MSC	176 -116
	♦APD	
	CDI	
	CODI	
	DIT	
	GSE	
	IDC	
	♦MOTA	
	SCE	
	♦SIEG	
	THEF	
	UTX	
1N4568A	Δ ♦MSC	176 -117
	♦APD	
	CDI	
	CODI	
	DIT	
	GSE	
	IDC	
	♦MOTA	
	SCE	
	♦SIEG	
	THEF	
	UTX	
	WAB	
1N4568B	CODI	176 - 46
	IDC	
	MSC	
	UTX	
1N4569	Δ ♦MSC	176 -118
	♦APD	
	CDI	
	CODI	
	GSE	
	IDC	
	♦MOTA	
	SCE	
	SIEG	
	THEF	
	UTX	
1N4569A	Δ ♦MSC	176 -119
	♦APD	
	CDI	
	CODI	
	GSE	
	IDC	
	♦MOTA	
	SCE	
	♦SIEG	
	THEF	
	UTX	
	WAB	
1N4569B	CODI	176 - 47
	IDC	
	MSC	
	UTX	
1N4570	Δ ♦MSC	176 -120
	♦APD	
	CDI	
	CODI	
	GSE	
	IDC	
	♦MOTA	
	SCE	
	♦SIEG	
	THEF	
	UTX	
1N4570A	Δ ♦MSC	176 -121
	♦APD	
	CDI	
	CODI	
	GSE	
	IDC	
	♦MOTA	
	SCE	
	♦SIEG	
	THEF	
	UTX	
	WAB	
1N4570B	CODI	176 - 48

cont.next page

Δ-Registered with JEDEC by this manufacturer

♦-Mfr's data sheet available in microfilm service

1. TYPE No. CROSS INDEX

IN TYPE NUMBER SEQUENCE

TYPE No.	MFRS	Pg&Line
1N4570B		
(cont.)	IDC	
	MSC	
	UTX	
1N4571	Δ♦MSC	176 -122
	♦APD	
	CODI	
	GSE	
	IDC	
	♦MOTA	
	SCE	
	♦SIEG	
	THEF	
	UTX	
1N4571A	Δ♦MSC	176 -123
	♦APD	
	CDI	
	CODI	
	GSE	
	IDC	
	♦MOTA	
	SCE	
	♦SIEG	
	THEF	
	UTX	
	WAB	
1N4571B	CODI	176 - 49
	IDC	
	MSC	
	UTX	
1N4572	Δ♦MSC	176 -124
	♦APD	
	CDI	
	CODI	
	GSE	
	IDC	
	♦MOTA	
	SCE	
	♦SIEG	
	THEF	
	UTX	
1N4572A	Δ♦MSC	176 -125
	♦APD	
	CDI	
	CODI	
	GSE	
	IDC	
	♦MOTA	
	SCE	
	♦SIEG	
	SPE	
	THEF	
	UTX	
	WAB	
1N4572B	CODI	176 - 50
	IDC	
	MSC	
	UTX	
1N4573	Δ♦MSC	176 -126
	♦APD	
	CDI	
	CODI	
	DIT	
	GSE	
	IDC	
	♦MOTA	
	SCE	
	♦SIEG	
	THEF	
	UTX	
	WAB	
1N4573A	Δ♦MSC	176 -127
	♦APD	
	CDI	
	CODI	
	DIT	
	GSE	
	IDC	
	♦MOTA	
	SCE	
	♦SIEG	
	THEF	
	UTX	
	WAB	
1N4573B	CODI	176 - 51
	IDC	
	MSC	
	UTX	
1N4574	Δ♦MSC	176 -128
	♦APD	
	CDI	
	CODI	
	GSE	
	IDC	
	♦MOTA	
	SCE	
	♦SIEG	
	THEF	
	UTX	
1N4574A	Δ♦MSC	176 -129
	♦APD	
	CDI	
	CODI	
	GSE	
	IDC	
	♦MOTA	
	SCE	
	♦SIEG	
	THEF	
	UTX	
	WAB	
1N4574B	CODI	176 - 52
	IDC	
	MSC	
	UTX	
1N4575	Δ♦MSC	176 -130
	♦APD	
	CDI	
	CODI	
	♦GSE	
	IDC	
	♦MOTA	
	SCE	
	♦SIEG	
	SPE	
	THEF	
	UTX	
1N4575A	Δ♦MSC	176 -131
	♦APD	
	CDI	
	CODI	
	♦GSE	
	IDC	
	♦MOTA	
	SCE	
	♦SIEG	
	THEF	
	UTX	
	WAB	
1N4575B	CODI	176 - 53
	IDC	
	MSC	
	UTX	
1N4576	Δ♦MSC	176 -132
	♦APD	
	CDI	
	CODI	
	♦GSE	
	IDC	
	♦MOTA	
	SCE	
	♦SIEG	
	THEF	
	UTX	
	WAB	
1N4576A	Δ♦MSC	176 -133
	♦APD	
	CDI	
	CODI	
	GSE	
	IDC	
	♦MOTA	
	SCE	
	♦SIEG	
	SPE	
	THEF	
	UTX	
	WAB	
1N4576B	CODI	176 - 54
	IDC	
	MSC	
	UTX	
1N4577	Δ♦MSC	176 -134
	♦APD	
	CDI	
	CODI	
	DIT	
	♦GSE	
	IDC	
	♦MOTA	
	SCE	
	♦SIEG	
	THEF	
	UTX	
1N4577A	Δ♦MSC	176 -135
	♦APD	
	CDI	
	CODI	
	DIT	
	♦GSE	
	IDC	
cont.next col.		

TYPE No.	MFRS	Pg&Line
1N4577A		
(cont.)	♦MOTA	
	SCE	♦SIEG
	THEF	UTX
		WAB
1N4577B	CODI	176 - 55
	IDC	MSC
		UTX
1N4578	Δ♦MSC	176 -136
	♦APD	CDI
	CODI	DIT
	♦GSE	IDC
	♦MOTA	SCE
	♦SIEG	SPE
	THEF	UTX
1N4578A	Δ♦MSC	176 -137
	♦APD	CDI
	CODI	DIT
	♦GSE	IDC
	♦MOTA	SCE
	♦SIEG	THEF
	UTX	WAB
1N4578B	CODI	176 - 56
	IDC	MSC
		UTX
1N4579	Δ♦MSC	176 -138
	♦APD	CDI
	CODI	DIT
	♦GSE	IDC
	♦MOTA	SCE
	♦SIEG	THEF
		UTX
1N4579A	Δ♦MSC	176 -139
	♦APD	CDI
	CODI	♦DIT
	♦GSE	IDC
	♦MOTA	SCE
	♦SIEG	THEF
	UTX	WAB
1N4579B	CODI	176 - 57
	IDC	MSC
		UTX
1N4580	Δ♦MSC	176 -140
	♦APD	CDI
	CODI	♦DIT
	♦GSE	IDC
	♦MOTA	SCE
	♦SIEG	THEF
	UTX	WAB
1N4580A	Δ♦MSC	176 -141
	♦APD	CDI
	CODI	♦DIT
	♦GSE	IDC
	♦MOTA	SCE
	♦SIEG	THEF
	UTX	WAB
1N4580B	CODI	176 - 58
	IDC	MSC
		UTX
1N4581	Δ♦MSC	176 -142
	♦APD	CDI
	CODI	♦DIT
	♦GSE	IDC
	♦MOTA	SCE
	♦SIEG	THEF
	UTX	WAB
1N4581A	Δ♦MSC	176 -143
	♦APD	CDI
	CODI	♦DIT
	♦GSE	IDC
	♦MOTA	SCE
	♦SIEG	THEF
	UTX	WAB
1N4581B	CODI	176 - 59
	IDC	MSC
		UTX
1N4582	Δ♦MSC	176 -144
	♦APD	CDI
	CODI	♦DIT
	♦GSE	IDC
	♦MOTA	SCE
	♦SIEG	SPE
	THEF	UTX
		WAB
1N4582A	Δ♦MSC	176 -145
	♦APD	CDI
	CODI	♦DIT
	♦GSE	IDC
	♦MOTA	SCE
	♦SIEG	THEF
	UTX	WAB
1N4582B	CODI	176 - 60
	IDC	MSC
		UTX
1N4583	Δ♦MSC	176 -146
	♦APD	CDI
	CODI	♦DIT
	♦GSE	IDC
	♦MOTA	SCE
	♦SIEG	THEF
		UTX
1N4583A	Δ♦MSC	176 -147
	♦APD	CDI
	CODI	♦DIT
	♦GSE	IDC
	♦MOTA	SCE
	♦SIEG	THEF
	UTX	WAB
1N4583B	CODI	176 - 61
	IDC	MSC
		UTX
1N4584	Δ♦MSC	176 -148
	♦APD	CDI
cont.next col.		

TYPE No.	MFRS	Pg&Line
1N4584		
(cont.)	CODI	
	♦DIT	♦GSE
	IDC	♦MOTA
	SCE	♦SIEG
	THEF	UTX
1N4584A	Δ♦MSC	176 -149
	♦APD	CDI
	CODI	♦DIT
	♦GSE	IDC
	♦MOTA	SCE
	♦SIEG	THEF
	UTX	WAB
1N4584B	CODI	176 - 62
	IDC	MSC
		UTX
1N4585	ETC	282 - 54
	IDC	SAR
	SCN	SLD
	SST	SSY
	STR	THEF
1N4586	ETC	401 -179
	IDC	SAR
	SCN	SLD
	SPE	SST
	STR	THEF
1N4587	ΔPRX	307 - 58
	ASI	CEN
	COO	♦DIT
	EDL	ETC
	HSE	IDC
	SAR	SSI
	SST	WAB
1N4588	ΔPRX	307 - 87
	ASI	CEN
	COO	♦DIT
	EDL	ETC
	HSE	IDC
	SAR	SPE
	SSI	WAB
1N4589	ΔPRX	307 -124
	ASI	CEN
	COO	♦DIT
	EDL	ETC
	HSE	IDC
	SAR	SPE
	SSI	WAB
1N4590	ΔPRX	307 -153
	ASI	CEN
	COO	EDL
	ETC	HSE
	♦IDC	SAR
	SSI	WAB
1N4591	ΔPRX	307 -184
	ASI	CEN
	COO	EDL
	ETC	HSE
	IDC	SAR
	SPE	SSI
		WAB
1N4592	ΔPRX	307 -200
	ASI	CEN
	COO	EDL
	♦IDC	SAR
	SSI	WAB
1N4594	ΔPRX	404 - 89
	ASI	CEN
	COO	EDL
	IDC	SAR
	SSI	WAB
1N4595	ΔPRX	407 -182
	ASI	CEN
	COO	EDL
	♦IDC	SAR
	SSI	WAB
1N4596	ΔPRX	410 - 29
	CEN	EDL
	IDC	SAR
	SSI	WAB
1N4597	ΔTRWS	423 - 73
	CEN	IDC
	SCN	SPE
1N4606	♦APD	246 -194
	CEN	GDC
	IDC	♦MSC
	RHM	RHMJ
	SPE	STI
1N4607	♦APD	246 -196
	GDC	IDC
	♦MSC	SPE
	SSY	♦UNI
		UPI
1N4608	♦APD	246 -197
	GDC	IDC
	♦MSC	♦UNI
		WAB
1N4610	IDC	246 -180
	MSC	SPR
		STR
1N4611	CODI	177 - 85
	IDC	SPE
1N4611A	CODI	177 - 86
	IDC	MSC
1N4611B	CODI	177 - 87
	DIT	IDC
	MSC	SPE
1N4611C	CODI	177 - 88
	IDC	MSC
1N4612	CODI	177 - 89
	IDC	UTX
1N4612A	CODI	177 - 90
	IDC	MSC
		UTX

TYPE No.	MFRS	Pg&Line
1N4612B	CODI	177 - 91
	IDC	MSC
		UTX
1N4612C	CODI	177 - 92
	IDC	MSC
		UTX
1N4613	CODI	177 - 93
	IDC	SPE
		UTX
1N4613A	CODI	177 - 94
	IDC	MSC
		UTX
1N4613B	CODI	177 - 95
	IDC	MSC
		UTX
1N4613C	CODI	177 - 96
	IDC	MSC
	SPE	UTX
1N4614	ΔTRWS	163 -100
	♦CDI	CODI
	EAS	GHZ
	IDC	KSI
	♦MOTA	♦MSC
	♦SIEG	SPE
	♦SPR	SSI
1N4615	ΔTRWS	163 -128
	♦CDI	CODI
	EAS	GHZ
	IDC	KSI
	♦MOTA	♦MSC
	♦SIEG	SPE
	♦SPR	SSI
1N4616	ΔTRWS	163 -172
	♦CDI	CODI
	EAS	GHZ
	IDC	KSI
	♦MOTA	♦MSC
	♦SIEG	SPE
	♦SPR	SSI
1N4617	ΔTRWS	164 - 20
	♦CDI	CODI
	EAS	GHZ
	IDC	KSI
	♦MOTA	♦MSC
	♦SIEG	SPE
	♦SPR	SSI
1N4618	ΔTRWS	164 -133
	♦CDI	CODI
	EAS	GHZ
	IDC	KSI
	♦MOTA	♦MSC
	♦SIEG	SPE
		♦SPR
1N4619	ΔTRWS	165 - 58
	♦CDI	CODI
	EAS	GHZ
	IDC	KSI
	♦MOTA	♦MSC
	♦SIEG	SPE
		♦SPR
1N4620	ΔTRWS	165 -189
	♦CDI	CODI
	EAS	GHZ
	IDC	KSI
	♦MOTA	♦MSC
	♦SIEG	SPE
		♦SPR
1N4621	ΔTRWS	166 -160
	♦CDI	CODI
	EAS	GHZ
	IDC	KSI
	♦MOTA	♦MSC
	♦SIEG	SPE
		♦SPR
1N4622	ΔTRWS	167 -125
	♦CDI	CODI
	EAS	GHZ
	IDC	KSI
	♦MOTA	♦MSC
	♦SIEG	SPE
		♦SPR
1N4623	ΔTRWS	168 -131
	♦CDI	CODI
	EAS	GHZ
	IDC	KSI
	♦MOTA	♦MSC
	♦SIEG	SPE
		♦SPR
1N4624	ΔTRWS	169 -162
	♦CDI	CODI
	EAS	GHZ
	IDC	KSI
	♦MOTA	♦MSC
	♦SIEG	SPE
		♦SPR
1N4625	ΔTRWS	171 - 39
	CDI	CODI
	EAS	GHZ
	IDC	KSI
	♦MOTA	♦MSC
	♦SIEG	SPE
		♦SPR
1N4626	ΔTRWS	172 -113
	CDI	CODI
	EAS	GHZ
	IDC	KSI
	♦MOTA	♦MSC
	♦SIEG	SPE
		♦SPR
1N4627	ΔTRWS	174 -112
	CDI	CODI
	EAS	GHZ
	IDC	KSI
cont.next col.		

TYPE No.	MFRS	Pg&Line
1N4627		
(cont.)	♦MOTA	
	♦MSC	♦SIEG
	SPE	♦SPR
1N4628	ΔTRWS	178 - 64
	CODI	IDC
	KSI	MSC
		SIEG
1N4629	ΔTRWS	180 - 60
	CODI	IDC
	KSI	MSC
		SIEG
1N4630	ΔTRWS	182 - 42
	CODI	IDC
	KSI	MSC
		SIEG
1N4631	ΔTRWS	185 - 78
	CODI	IDC
	KSI	MSC
		SIEG
1N4632	ΔTRWS	187 -126
	CODI	IDC
	KSI	MSC
		SIEG
1N4632A	GSE	330 - 89
1N4633	ΔTRWS	189 - 60
	CODI	IDC
	KSI	MSC
		SIEG
1N4633A	GSE	330 - 90
1N4634	CODI	191 - 19
	IDC	KSI
	MSC	SIEG
		TRWS
1N4634A	GSE	330 - 91
1N4635	ΔTRWS	192 -194
	CODI	IDC
	KSI	MSC
		SIEG
1N4635A	GSE	330 - 92
1N4636	ΔTRWS	195 - 23
	CODI	IDC
	KSI	MSC
		SIEG
1N4636A	GSE	330 - 93
1N4637	ΔTRWS	196 -124
	CODI	IDC
	KSI	MSC
		SIEG
1N4637A	GSE	330 - 94
1N4638	ΔTRWS	198 -133
	CODI	IDC
	KSI	MSC
		SIEG
1N4639	ΔTRWS	200 -130
	CODI	IDC
	KSI	MSC
		SIEG
1N4640	ΔTRWS	202 - 26
	IDC	KSI
	MSC	SIEG
1N4641	ΔTRWS	203 -130
	IDC	KSI
	MSC	SIEG
1N4642	ΔTRWS	205 - 64
	IDC	KSI
	MSC	SIEG
		SPE
1N4643	ΔTRWS	206 -201
	IDC	KSI
	MSC	SIEG
1N4644	ΔTRWS	208 - 88
	IDC	KSI
	MSC	SIEG
1N4645	IDC	209 -157
	MSC	SIEG
		TRWS
1N4646	ΔTRWS	210 -194
	IDC	MSC
	SIEG	WAB
1N4647	ΔTRWS	212 - 7
	IDC	MSC
		SIEG
1N4648	ΔTRWS	213 - 21
	IDC	MSC
		SIEG
1N4649	ΔTRWS	166 - 71
	CEN	IDC
		SPE
1N4650	ΔTRWS	167 - 36
	CEN	IDC
1N4651	ΔTRWS	168 - 16
	CEN	IDC
		UPI
1N4652	ΔTRWS	169 - 38
	CEN	IDC
1N4653	ΔTRWS	170 - 91
	CEN	IDC
		SPE
1N4654	ΔTRWS	171 -172
	CEN	IDC
1N4655	ΔTRWS	173 - 56
	CEN	IDC
1N4656	ΔTRWS	175 -119
	CEN	IDC
		MSC
1N4657	ΔTRWS	178 -100
	CEN	IDC
		MSC
1N4658	ΔTRWS	180 - 93
	CEN	IDC
		MSC
1N4659	CEN	182 - 78
cont.next page		

Δ-Registered with JEDEC by this manufacturer

♦-Mfr's data sheet available in microfilm service

1. TYPE No. CROSS INDEX

IN TYPE NUMBER SEQUENCE

TYPE No.	MFRS	Pg&Line
1N4659 (cont.)	IDC	
	MSC	
	TRWS	
1N4660	ΔTRWS	185 -109
	CEN	
	IDC	
	MSC	
1N4661	ΔTRWS	187 -167
	CEN	
	IDC	
	MSC	
1N4662	ΔTRWS	189 - 80
	CEN	
	IDC	
	MSC	
1N4663	ΔTRWS	191 - 47
	CEN	
	IDC	
	MSC	
1N4664	ΔTRWS	192 -213
	CEN	
	IDC	
	MSC	
1N4665	ΔTRWS	195 - 47
	CEN	
	IDC	
	MSC	
1N4666	ΔTRWS	196 -142
	CEN	
	IDC	
	MSC	
1N4667	CEN	198 -158
	IDC	
	MSC	
	TRWS	
1N4668	ΔTRWS	200 -151
	CEN	
	IDC	
	MSC	
1N4669	ΔTRWS	202 - 49
	CEN	
	IDC	
	MSC	
1N4670	ΔTRWS	203 -147
	CEN	
	IDC	
	MSC	
1N4671	ΔTRWS	205 - 86
	CEN	
	IDC	
	MSC	
1N4672	ΔTRWS	207 - 11
	CEN	
	IDC	
	MSC	
1N4673	ΔTRWS	208 -104
	CEN	
	IDC	
	MSC	
1N4674	ΔTRWS	209 -170
	CEN	
	IDC	
	MSC	
1N4675	ΔTRWS	211 - 7
	CEN	
	IDC	
	MSC	
1N4676	ΔTRWS	212 - 19
	CEN	
	IDC	
	MSC	
1N4677	ΔTRWS	213 - 36
	CEN	
	IDC	
	MSC	
1N4678	♦APD	163 -101
	CODI	
	GHZ	
	IDC	
	KSI	
	♦MOTA	
	♦MSC	
	♦SIEG	
	TRWS	
1N4679	ΔTRWS	163 -129
	♦APD	
	CODI	
	GHZ	
	IDC	
	KSI	
	♦MOTA	
	♦MSC	
	♦SIEG	
1N4680	ΔTRWS	163 -173
	♦APD	
	CODI	
	GHZ	
	IDC	
	KSI	
	♦MOTA	
	♦MSC	
	♦SIEG	
1N4681	ΔTRWS	164 - 21
	♦APD	
	CODI	
	GHZ	
	IDC	
	KSI	
	♦MOTA	
	♦MSC	
	♦SIEG	
1N4682	ΔTRWS	164 -134
	♦APD	
	CODI	
	GHZ	
	IDC	
	KSI	
	♦MOTA	
	♦MSC	
	♦SIEG	
1N4683	ΔTRWS	165 - 59
	♦APD	
	CODI	
	GHZ	
	IDC	
	KSI	
	♦MOTA	
	♦MSC	
	♦SIEG	
1N4684	ΔTRWS	165 -190
	♦APD	
	CODI	
	GHZ	
	IDC	
	KSI	
	♦MOTA	
	♦MSC	
	♦SIEG	
1N4685	ΔTRWS	166 -161
	♦APD	
	CODI	
	GHZ	
	IDC	
	KSI	
	♦MOTA	
	♦MSC	
	♦SIEG	
1N4686	ΔTRWS	167 -126
	♦APD	
	CODI	
	GHZ	
	IDC	
	KSI	
	♦MOTA	
	♦MSC	
	♦SIEG	
1N4687	ΔTRWS	168 -132
	♦APD	
	CODI	
	GHZ	
	IDC	
	KSI	
	♦MOTA	
	♦MSC	
	♦SIEG	
1N4688	ΔTRWS	169 -163
	♦APD	
	CODI	
	GHZ	
	IDC	
	KSI	
	♦MOTA	
	♦MSC	
	♦SIEG	
	STI	
	WAB	

TYPE No.	MFRS	Pg&Line
1N4689	ΔTRWS	171 - 40
	♦APD	
	CODI	
	GHZ	
	IDC	
	KSI	
	♦MOTA	
	♦MSC	
	♦SIEG	
1N4690	ΔTRWS	172 -114
	♦APD	
	CODI	
	GHZ	
	IDC	
	KSI	
	♦MOTA	
	♦MSC	
	♦SIEG	
1N4691	ΔTRWS	174 -113
	♦APD	
	CODI	
	GHZ	
	IDC	
	KSI	
	♦MOTA	
	♦MSC	
	♦SIEG	
1N4692	ΔTRWS	177 -153
	♦APD	
	CODI	
	GHZ	
	IDC	
	KSI	
	♦MOTA	
	♦MSC	
	♦SIEG	
1N4693	ΔTRWS	179 -145
	♦APD	
	CODI	
	GHZ	
	IDC	
	KSI	
	♦MOTA	
	♦MSC	
	♦SIEG	
1N4694	ΔTRWS	181 -128
	♦APD	
	CODI	
	GHZ	
	IDC	
	KSI	
	♦MOTA	
	♦MSC	
	♦SIEG	
1N4695	ΔTRWS	183 -130
	♦APD	
	CODI	
	GHZ	
	IDC	
	KSI	
	♦MOTA	
	♦MSC	
	♦SIEG	
1N4696	ΔTRWS	184 -140
	♦APD	
	CODI	
	GHZ	
	IDC	
	KSI	
	♦MOTA	
	♦MSC	
	♦SIEG	
1N4697	ΔTRWS	186 -204
	♦APD	
	CODI	
	GHZ	
	IDC	
	KSI	
	♦MOTA	
	♦MSC	
	♦SIEG	
1N4698	ΔTRWS	188 -165
	♦APD	
	CODI	
	GHZ	
	IDC	
	KSI	
	♦MOTA	
	♦MSC	
	♦SIEG	
1N4699	ΔTRWS	190 -115
	♦APD	
	CODI	
	GHZ	
	IDC	
	KSI	
	♦MOTA	
	♦MSC	
	♦SIEG	
1N4700	♦APD	192 -103
	CODI	
	CRI	
	GHZ	
	IDC	
	KSI	
	♦MOTA	
	♦MSC	
	♦SIEG	
1N4701	♦APD	193 -166
	CODI	
	CRI	
	GHZ	
	IDC	
	KSI	
	♦MOTA	
	♦MSC	
	♦SIEG	
1N4702	♦APD	194 -123
	CODI	
	CRI	
	GHZ	
	IDC	
	KSI	
	♦MOTA	
	♦MSC	
	♦SIEG	
1N4703	♦APD	196 - 33
	CODI	
	CRI	
	GHZ	
	IDC	
	KSI	
	♦MOTA	
	♦MSC	
	♦SIEG	
1N4704	♦APD	197 - 99
	CODI	
	CRI	
	GHZ	
	IDC	
	KSI	
	♦MOTA	
	♦MSC	
	♦SIEG	
1N4705	♦APD	198 - 32
	CODI	
	CRI	
	GHZ	
	IDC	
	KSI	
	♦MOTA	
	♦MSC	
	♦SIEG	
1N4706	♦APD	199 -115
	CODI	
	CRI	
	GHZ	
	IDC	
	KSI	
	♦MOTA	
	♦MSC	
	♦SIEG	
1N4707	♦APD	200 - 38
	CODI	
	CRI	
	GHZ	
	IDC	
	KSI	
	♦MOTA	
	♦MSC	
	♦SIEG	
1N4708	♦APD	201 -137
	CRI	
	GHZ	
	IDC	
	KSI	
	♦MOTA	
	♦MSC	
	♦SIEG	
1N4709	♦APD	203 - 47
	CRI	
	GHZ	
	IDC	
	KSI	
	♦MOTA	
	♦MSC	
	♦SIEG	
1N4710	♦APD	204 - 95
	CRI	
	GHZ	
	IDC	
	KSI	
	♦MOTA	
	♦MSC	
	♦SIEG	
1N4711	♦APD	204 -187
	CRI	
	GHZ	
	IDC	
	KSI	

cont.next col.

TYPE No.	MFRS	Pg&Line
1N4711 (cont.)	♦MOTA	
	♦MSC	
	♦SIEG	
1N4712	♦APD	206 - 27
	CRI	
	GHZ	
	IDC	
	KSI	
	♦MOTA	
	♦MSC	
	♦SIEG	
1N4713	♦APD	206 -119
	CRI	
	GHZ	
	IDC	
	KSI	
	♦MOTA	
	♦MSC	
	♦SIEG	
1N4714	♦APD	208 - 4
	CRI	
	GHZ	
	IDC	
	KSI	
	♦MOTA	
	♦MSC	
	♦SIEG	
1N4715	♦APD	209 - 93
	CRI	
	IDC	
	♦MOTA	
	♦MSC	
	♦SIEG	
1N4716	♦APD	210 -132
	CRI	
	IDC	
	♦MOTA	
	♦MSC	
	♦SIEG	
1N4717	♦APD	211 -153
	CRI	
	IDC	
	♦MOTA	
	♦MSC	
	♦SIEG	
1N4718	CEN	257 - 90
	CRI	
	IDC	
	SSI	
1N4719	Δ♦MOTA	287 -198
	ASI	
	CODI	
	HTN	
	IDC	
	SCN	
	SLD	
	SPE	
	SST	
	UPI	
	WAB	
1N4720	Δ♦MOTA	288 - 38
	ASI	
	CODI	
	CRI	
	HTN	
	IDC	
	SCN	
	SLD	
	SPE	
	SST	
	UPI	
	WAB	
1N4721	Δ♦MOTA	288 -118
	ASI	
	CODI	
	CRI	
	HTN	
	SCN	
	SLD	
	SPE	
	SST	
	STI	
	UPI	
	WAB	
1N4722	Δ♦MOTA	288 -216
	ASI	
	CODI	
	CRI	
	HTN	
	IDC	
	SCN	
	SLD	
	SPE	
	SST	
	STI	
	UPI	
	WAB	
1N4723	Δ♦MOTA	289 - 78
	ASI	
	CODI	
	CRI	
	HTN	
	IDC	
	SCN	
	SLD	
	SPE	
	SST	
1N4724	Δ♦MOTA	289 -146
	ASI	
	CODI	
	CRI	
	HTN	
	IDC	
	SCN	
	SLD	
	SPE	
	SST	
1N4725	Δ♦MOTA	402 -179
	ASI	
	CODI	
	CRI	
	HTN	
	IDC	
	SCN	
	SLD	
	SPE	
	SST	
1N4726	CRI	244 -137
	HTN	
	IDC	
1N4727	♦APD	244 -138
	CRI	
	GDC	
	HITJ	
	HTN	
	IDC	
	MSC	
	STI	
	♦UNI	
	UPI	
1N4728	Δ♦MOTA	166 - 84
	♦APD	
	♦CDIL	
	CEN	
	CRI	
	♦DIT	
	FGRS	
	GDC	
	HITJ	
	HTN	
	IDC	
	MSC	
	NJS	
	SCN	
	♦SIEG	
	SPE	
	SST	
	THEF	
	UPI	
	WAB	
1N4728A	Δ♦MOTA	166 - 72
	♦ALGG	
	♦APD	
	CEN	
	CRI	
	HITJ	
	HTN	
	IDC	
	♦MSC	
	NJS	
	SCN	
	♦SIEG	
	SPE	
	SST	
	THEF	
	♦UNI	
	UPI	
1N4729	Δ♦MOTA	167 - 52
	♦APD	
	♦CDIL	
	CEN	
	CRI	
	♦DIT	
	FGRS	
	GDC	
	HITJ	
	HTN	
	IDC	
	♦ITTG	
	MSC	

cont.next col.

TYPE No.	MFRS	Pg&Line
1N4729 (cont.)	NJS	
	SCN	
	SIEG	
	SPE	
	SST	
	THEF	
	UPI	
	WAB	
1N4729A	Δ♦MOTA	167 - 37
	♦ALGG	
	♦APD	
	CEN	
	CRI	
	HITJ	
	HTN	
	IDC	
	ITTG	
	♦MSC	
	NJS	
	SCN	
	♦SIEG	
	SPE	
	SST	
	THEF	
	♦UNI	
	UPI	
1N4730	Δ♦MOTA	168 - 32
	♦APD	
	♦CDIL	
	CEN	
	CRI	
	♦DIT	
	FGRS	
	GDC	
	HITJ	
	HTN	
	IDC	
	♦ITTG	
	MSC	
	NJS	
	SCN	
	SIEG	
	SPE	
	SST	
	THEF	
	♦UNI	
	UPI	
1N4730A	Δ♦MOTA	168 - 17
	♦ALGG	
	♦APD	
	CEN	
	CRI	
	HITJ	
	HTN	
	IDC	
	ITTG	
	♦MSC	
	NJS	
	SCN	
	♦SIEG	
	SPE	
	SST	
	THEF	
	UPI	
1N4731	Δ♦MOTA	169 - 53
	♦APD	
	♦CDIL	
	CEN	
	CRI	
	♦DIT	
	FGRS	
	GDC	
	HITJ	
	HTN	
	IDC	
	♦ITTG	
	MSC	
	NJS	
	SCN	
	SIEG	
	SPE	
	SST	
	THEF	
	♦UNI	
	UPI	
1N4731A	Δ♦MOTA	169 - 39
	♦ALGG	
	♦APD	
	CEN	
	CRI	
	HITJ	
	HTN	
	IDC	
	ITTG	
	♦MSC	
	NJS	
	SCN	
	♦SIEG	
	SPE	
	SST	
	THEF	
	UPI	
	WAB	
1N4732	Δ♦MOTA	170 -108
	♦APD	
	♦CDIL	
	CEN	
	CRI	
	♦DIT	
	FGRS	
	GDC	
	HITJ	
	HTN	
	IDC	
	♦ITTG	
	MSC	
	NJS	
	SCN	
	SIEG	
	SPE	
	SST	
	THEF	
	♦UNI	
	UPI	
1N4732A	Δ♦MOTA	170 - 92
	♦ALGG	
	♦APD	
	CEN	
	CRI	
	HITJ	
	HTN	
	IDC	
	ITTG	
	♦MSC	
	NJS	
	SCN	
	♦SIEG	
	SPE	
	SST	
	THEF	
	TIC	
	♦UNI	
	UPI	
	WAB	
1N4733	Δ♦MOTA	171 -190
	♦APD	
	♦CDIL	
	CEN	
	CRI	
	♦DIT	
	FGRS	
	GDC	
	HITJ	
	HTN	
	IDC	
	♦ITTG	
	MSC	
	NJS	
	SCN	
	♦SIEG	
	SPE	
	SST	
	THEF	
	UPI	
	WAB	
1N4733A	Δ♦MOTA	171 -173
	♦ALGG	
	♦APD	
	CEN	
	CRI	
	FGRS	
	HITJ	
	HTN	
	IDC	
	INC	
	ITTG	
	♦MSC	
	NJS	
	SCN	
	♦SIEG	
	SPE	
	SST	
	THEF	
	♦UNI	
	UPI	
	WAB	
1N4734	Δ♦MOTA	173 - 77
	♦APD	
	♦CDIL	
	CEN	
	CRI	
	♦DIT	
	FGRS	
	GDC	
	HITJ	
	HTN	
	IDC	
	♦ITTG	
	MSC	
	NJS	
	SAR	
	SCN	
	SIEG	
	SPE	
	SST	
	THEF	
	♦UNI	
	UPI	
	WAB	

cont.next page

TYPE No.	MFRS	Pg&Line
1N4734A	Δ♦MOTA	173 - 57
	♦ALGG	
	♦APD	
	CEN	
	CRI	
	FGRS	
	HITJ	
	HTN	
	IDC	
	INC	
	ITTG	
	♦MSC	
	NJS	
	SAR	
	SCN	
	♦SIEG	
	SPE	
	SST	
	THEF	
	♦UNI	
	UPI	
	WAB	
1N4735	Δ♦MOTA	175 -140
	♦APD	
	♦CDIL	
	CEN	
	CRI	
	♦DIT	
	FGRS	
	FSC	
	GDC	
	HITJ	
	HTN	
	IDC	
	♦ITTG	
	MSC	
	NJS	
	SAR	
	SCN	
	SIEG	
	SPE	
	♦SPR	
	SST	
	♦UNI	
	UPI	
1N4735A	Δ♦MOTA	175 -120
	♦ALGG	
	♦APD	
	CDIL	
	CEN	
	CRI	
	FGRS	
	♦FSC	
	HITJ	
	HTN	
	IDC	
	INC	
	ITTG	
	♦MSC	
	NJS	
	SAR	
	SCN	
	♦SIEG	
	SPE	
	SST	
	THEF	
	♦UNI	
	UPI	
	WAB	
1N4736	Δ♦MOTA	178 -133
	♦APD	
	♦CDIL	
	CEN	
	CRI	
	♦DIT	
	FGRS	
	FSC	
	GDC	
	HITJ	
	HTN	
	IDC	
	♦ITTG	
	MSC	
	NJS	
	SAR	
	SCN	
	SIEG	
	SPE	
	♦SPR	
	SST	
	♦UNI	
	UPI	
1N4736A	Δ♦MOTA	178 -101
	♦ALGG	
	♦APD	
	CDIL	
	CEN	
	CRI	
	FGRS	
	♦FSC	
	HITJ	
	HTN	
	IDC	
	INC	
	ITTG	
	♦MSC	
	NJS	
	SAR	
	SCN	
	♦SIEG	
	SPE	
	SST	
	THEF	
	♦UNI	
	UPI	
	WAB	
1N4737	Δ♦MOTA	180 -125
	♦APD	
	♦CDIL	
	CEN	
	CRI	
	♦DIT	
	FGRS	
	GDC	
	HITJ	
	HTN	
	IDC	
	♦ITTG	
	MSC	
	NJS	
	SAR	
	SCN	
	SIEG	
	SPE	
	♦SPR	
	SST	
	♦UNI	
	UPI	
1N4737A	Δ♦MOTA	180 - 94
	♦ALGG	
	♦APD	
	CDIL	
	CEN	
	CRI	
	FGRS	
	HITJ	
	HTN	
	IDC	
	INC	
	ITTG	
	♦MSC	
	NJS	
	SAR	
	SCN	
	♦SIEG	
	SPE	
	SST	
	THEF	
	UPI	
	WAB	
1N4738	Δ♦MOTA	182 -113
	♦APD	
	♦CDIL	
	CEN	
	CRI	
	♦DIT	
	FGRS	
	FSC	
	GDC	
	HITJ	
	HTN	
	IDC	
	♦ITTG	
	MSC	
	NJS	
	SAR	
	SCN	
	SIEG	
	SPE	
	♦SPR	
	SST	
	UPI	
1N4738A	Δ♦MOTA	182 - 79
	♦ALGG	
	♦APD	
	CDIL	
	CEN	
	CRI	
	FGRS	
	♦FSC	
	HITJ	
	HTN	
	IDC	
	INC	
	ITTG	
	♦MSC	
	NJS	
	SAR	
	SCN	
	♦SIEG	
	SPE	
	SST	
	THEF	
	UPI	
	WAB	
1N4739	Δ♦MOTA	185 -142
	♦APD	
	♦CDIL	
	CEN	
	CRI	

Δ-Registered with JEDEC by this manufacturer

♦-Mfr's data sheet available in microfilm service

1. TYPE No. CROSS INDEX

IN TYPE NUMBER SEQUENCE

TYPE No.	MFRS	Pg&Line
1N4739 (cont.)	♦DIT	
	FGRS	
	GDC	
	HITJ	
	HTN	
	IDC	
	♦ITTG	
	MSC	
	NJS	
	SAR	
	SCN	
	SIEG	
	SPE	
	♦SPR	
	SST	
	UPI	
	WAB	
1N4739A	Δ♦MOTA	185 -110
	♦ALGG	
	♦APD	
	CDIL	
	CEN	
	CRI	
	FGRS	
	HITJ	
	HTN	
	IDC	
	INC	
	ITTG	
	♦MSC	
	NJS	
	SAR	
	SCN	
	♦SIEG	
	SPE	
	SST	
	THEF	
	♦UNI	
	UPI	
	WAB	
1N4740	Δ♦MOTA	187 -207
	♦APD	
	♦CDIL	
	CEN	
	CRI	
	DII	
	♦DIT	
	FGRS	
	♦FSC	
	GDC	
	HITJ	
	HTN	
	IDC	
	♦ITTG	
	MSC	
	NJS	
	SAR	
	SCN	
	SIEG	
	SPE	
	♦SPR	
	SST	
	♦UNI	
	UPI	
	WAB	
1N4740A	Δ♦MOTA	187 -168
	♦ALGG	
	♦APD	
	CDIL	
	CEN	
	CRI	
	DII	
	FGRS	
	♦FSC	
	HITJ	
	HTN	
	IDC	
	INC	
	ITTG	
	♦MSC	
	NJS	
	SAR	
	SCN	
	♦SIEG	
	SPE	
	SST	
	THEF	
	♦UNI	
	UPI	
	WAB	
1N4741	Δ♦MOTA	189 -114
	♦APD	
	♦CDIL	
	CEN	
	CRI	
	DII	
	♦DIT	
	FGRS	
	GDC	
	HITJ	
	HTN	
	IDC	
	♦ITTG	
	MSC	
	NJS	
	SAR	
	SCN	
	SIEG	
	SPE	
	♦SPR	
	SST	
	SSY	
	UPI	
1N4741A	Δ♦MOTA	189 - 81
	♦ALGG	
	♦APD	
	CDIL	
	CEN	
	CRI	
	DII	
	FGRS	
	HITJ	
	HTN	
	IDC	
	INC	
	ITTG	
	♦MSC	
	NJS	
	SAR	
	SCN	
	♦SIEG	
	SPE	
	SST	
	THEF	
	UPI	
	WAB	
1N4742	Δ♦MOTA	191 - 87
	♦APD	
	♦CDIL	
	CEN	
	CRI	
	DII	
	♦DIT	
	FGRS	
	FSC	
	GDC	
	HITJ	
	HTN	
	IDC	
	♦ITTG	
	MSC	
	NJS	
	SAR	
	SCN	
	SIEG	
	SPE	
	♦SPR	
	SST	
	SSY	
	UPI	
	WAB	
1N4742A	Δ♦MOTA	191 - 48
	♦ALGG	
	♦APD	
	CDIL	
	CEN	
	CRI	
	DII	
	FGRS	
	♦FSC	
	HITJ	
	HTN	
	IDC	
	INC	
	ITTG	
	♦MSC	
	NJS	
	SAR	
	SCN	
	♦SIEG	
	SPE	
	SST	
	THEF	
	UPI	
	WAB	
1N4743	Δ♦MOTA	193 - 32
	♦APD	
	♦CDIL	
	CEN	
	CRI	
	DII	
	♦DIT	
	FGRS	
	GDC	
	HITJ	
	HTN	
	IDC	
	♦ITTG	
	MSC	
	NJS	
	SAR	
	SCN	
	SIEG	
	SPE	
	♦SPR	
	SST	
	♦UNI	
	UPI	
1N4743A	Δ♦MOTA	193 - 1
	♦ALGG	
	♦APD	
	CDIL	
	CEN	
cont.next col.		

TYPE No.	MFRS	Pg&Line
1N4743A (cont.)	CRI	
	DII	
	FGRS	
	HITJ	
	HTN	
	IDC	
	INC	
	ITTG	
	♦MSC	
	NJS	
	SAR	
	SCN	
	♦SIEG	
	SPE	
	SST	
	THEF	
	♦UNI	
	UPI	
	WAB	
1N4744	Δ♦MOTA	195 - 85
	♦APD	
	♦CDIL	
	CEN	
	CRI	
	DII	
	♦DIT	
	FGRS	
	FSC	
	GDC	
	HITJ	
	HTN	
	IDC	
	♦ITTG	
	MSC	
	NJS	
	SAR	
	SCN	
	SIEG	
	SPE	
	♦SPR	
	SST	
	♦UNI	
	UPI	
	WAB	
1N4744A	Δ♦MOTA	195 - 48
	♦ALGG	
	♦APD	
	CDIL	
	CEN	
	CRI	
	DII	
	FGRS	
	FSC	
	HITJ	
	HTN	
	IDC	
	INC	
	ITTG	
	♦MSC	
	NJS	
	SAR	
	SCN	
	♦SIEG	
	SPE	
	SST	
	THEF	
	♦UNI	
	UPI	
	WAB	
1N4745	Δ♦MOTA	196 -175
	♦APD	
	♦CDIL	
	CEN	
	CRI	
	DII	
	♦DIT	
	FGRS	
	GDC	
	HITJ	
	HTN	
	IDC	
	♦ITTG	
	MSC	
	NJS	
	SAR	
	SCN	
	SIEG	
	SPE	
	♦SPR	
	SST	
	SSY	
	♦UNI	
	UPI	
	WAB	
1N4745A	Δ♦MOTA	196 -143
	♦ALGG	
	♦APD	
	CDIL	
	CEN	
	CRI	
	DII	
	FGRS	
	HITJ	
	HTN	
	IDC	
	INC	
	ITTG	
	♦MSC	
	NJS	
	SAR	
	SCN	
	♦SIEG	
	SPE	
	SST	
	THEF	
	♦UNI	
	UPI	
	WAB	
1N4746	Δ♦MOTA	198 -193
	♦APD	
	♦CDIL	
	CEN	
	CRI	
	DII	
	♦DIT	
	FGRS	
	FSC	
	GDC	
	HITJ	
	HTN	
	IDC	
	♦ITTG	
	MSC	
	NJS	
	SAR	
	SCN	
	SIEG	
	SPE	
	♦SPR	
	SST	
	SSY	
	♦UNI	
	UPI	
	WAB	
1N4746A	Δ♦MOTA	198 -159
	♦ALGG	
	♦APD	
	CDIL	
	CEN	
	CRI	
	DII	
	FGRS	
	FSC	
	HITJ	
	HTN	
	IDC	
	INC	
	ITTG	
	♦MSC	
	NJS	
	SAR	
	SCN	
	♦SIEG	
	SPE	
	SST	
	THEF	
	UPI	
	WAB	
1N4747	Δ♦MOTA	200 -184
	♦APD	
	♦CDIL	
	CEN	
	CRI	
	DII	
	♦DIT	
	FGRS	
	FSC	
	GDC	
	HITJ	
	HTN	
	IDC	
	♦ITTG	
	MSC	
	NJS	
	SAR	
	SCN	
	SIEG	
	SPE	
	♦SPR	
	SST	
	UPI	
	WAB	
1N4747A	Δ♦MOTA	200 -152
	♦ALGG	
	♦APD	
	CDIL	
	CEN	
	CRI	
	DII	
	FGRS	
	FSC	
	HITJ	
	HTN	
	IDC	
	INC	
	ITTG	
	♦MSC	
	NJS	
	SAR	
	SCN	
	♦SIEG	
cont.next col.		

TYPE No.	MFRS	Pg&Line
1N4747A (cont.)	SPE	
	SST	
	THEF	
	UPI	
	WAB	
1N4748	Δ♦MOTA	202 - 84
	♦APD	
	♦CDIL	
	CEN	
	CRI	
	DII	
	♦DIT	
	FGRS	
	GDC	
	HITJ	
	HTN	
	IDC	
	♦ITTG	
	MSC	
	NJS	
	SAR	
	SCN	
	SIEG	
	SPE	
	♦SPR	
	SST	
	UPI	
	WAB	
1N4748A	Δ♦MOTA	202 - 50
	♦ALGG	
	APD	
	CDIL	
	CEN	
	CRI	
	DII	
	FGRS	
	HITJ	
	HTN	
	IDC	
	INC	
	ITTG	
	♦MSC	
	NJS	
	SAR	
	SCN	
	♦SIEG	
	SPE	
	SST	
	SSY	
	UPI	
	WAB	
1N4749	Δ♦MOTA	203 -180
	♦APD	
	♦CDIL	
	CEN	
	CRI	
	DII	
	♦DIT	
	FGRS	
	GDC	
	HITJ	
	HTN	
	IDC	
	♦ITTG	
	MSC	
	NJS	
	SAR	
	SCN	
	SIEG	
	SPE	
	♦SPR	
	SST	
	♦UNI	
	UPI	
	WAB	
1N4749A	Δ♦MOTA	203 -148
	♦ALGG	
	♦APD	
	CDIL	
	CEN	
	CRI	
	DII	
	FGRS	
	HITJ	
	HTN	
	IDC	
	INC	
	ITTG	
	♦MSC	
	NJS	
	SAR	
	SCN	
	♦SIEG	
	SPE	
	SST	
	THEF	
	♦UNI	
	UPI	
	WAB	
1N4750	Δ♦MOTA	205 -122
	♦APD	
	♦CDIL	
	CEN	
	CRI	
	DII	
	♦DIT	
	FGRS	
	FSC	
	GDC	
	HITJ	
	HTN	
	IDC	
	♦ITTG	
	MSC	
	NJS	
	SAR	
	SCN	
	SIEG	
	SPE	
	♦SPR	
	SST	
	UPI	
	WAB	
1N4750A	Δ♦MOTA	205 - 87
	♦ALGG	
	♦APD	
	CDIL	
	CEN	
	CRI	
	DII	
	FGRS	
	FSC	
	HTN	
	IDC	
	INC	
	ITTG	
	♦MSC	
	NJS	
	SAR	
	SCN	
	♦SIEG	
	SPE	
	SST	
	THEF	
	UPI	
	WAB	
1N4751	Δ♦MOTA	207 - 46
	♦APD	
	♦CDIL	
	CEN	
	CRI	
	DII	
	♦DIT	
	FGRS	
	GDC	
	HITJ	
	HTN	
	IDC	
	♦ITTG	
	MSC	
	NJS	
	SAR	
	SCN	
	SIEG	
	SPE	
	♦SPR	
	SST	
	♦UNI	
	UPI	
	WAB	
1N4751A	Δ♦MOTA	207 - 12
	♦ALGG	
	CDIL	
	CEN	
	CRI	
	DII	
	FGRS	
	HITJ	
	HTN	
	IDC	
	INC	
	ITTG	
	♦MSC	
	NJS	
	SAR	
	SCN	
	♦SIEG	
	SPE	
	SST	
	THEF	
	UPI	
	WAB	
1N4752	Δ♦MOTA	208 -140
	♦APD	
	♦CDIL	
	CEN	
	CRI	
	DII	
	♦DIT	
	FGRS	
	FSC	
	GDC	
	HITJ	
	HTN	
	IDC	
	♦ITTG	
	MSC	
cont.next col.		

TYPE No.	MFRS	Pg&Line
1N4752 (cont.)	NJS	
	SAR	
	SCN	
	SIEG	
	SPE	
	♦SPR	
	SST	
	♦UNI	
	UPI	
1N4752A	Δ♦MOTA	208 -105
	♦ALGG	
	♦APD	
	CDIL	
	CEN	
	CRI	
	DII	
	FGRS	
	FSC	
	HITJ	
	HTN	
	IDC	
	INC	
	ITTG	
	♦MSC	
	NJS	
	SAR	
	SCN	
	♦SIEG	
	SPE	
	SST	
	THEF	
	♦UNI	
	UPI	
	WAB	
1N4753	Δ♦MOTA	209 -197
	♦APD	
	♦CDIL	
	CEN	
	CRI	
	DII	
	♦DIT	
	GDC	
	HITJ	
	HTN	
	IDC	
	INC	
	ITTG	
	♦MSC	
	NJS	
	SAR	
	SCN	
	♦SIEG	
	SPE	
	SST	
	THEF	
	♦UNI	
	UPI	
	WAB	
1N4753A	Δ♦MOTA	209 -171
	♦ALGG	
	♦APD	
	CEN	
	CRI	
	DII	
	HITJ	
	HTN	
	IDC	
	♦MSC	
	NJS	
	SAR	
	SCN	
	♦SIEG	
	SPE	
	SST	
	UPI	
1N4754	Δ♦MOTA	211 - 32
	♦APD	
	♦CDIL	
	CEN	
	CRI	
	DII	
	♦DIT	
	GDC	
	HTN	
	IDC	
	MSC	
	NJS	
	SAR	
	SCN	
	SIEG	
	SPE	
	♦SPR	
	SST	
	UPI	
1N4754A	Δ♦MOTA	211 - 8
	♦ALGG	
	♦APD	
	CEN	
	CRI	
	DII	
	HTN	
	IDC	
	♦MSC	
	NJS	
	SAR	
	SCN	
	♦SIEG	
	SPE	
	SST	
	THEF	
	UPI	
1N4755	Δ♦MOTA	212 - 41
	♦APD	
	♦CDIL	
	CEN	
	CRI	
	DII	
	♦DIT	
	GDC	
	HTN	
	IDC	
	MSC	
	NJS	
	SAR	
	SCN	
	SIEG	
	SPE	
	♦SPR	
	SST	
	UPI	
1N4755A	Δ♦MOTA	212 - 20
	♦ALGG	
	♦APD	
	CEN	
	CRI	
	DII	
	HTN	
	IDC	
	♦MSC	
	NJS	
	SAR	
	SCN	
	♦SIEG	
	SPE	
	SST	
	THEF	
	UPI	
	WAB	
1N4756	Δ♦MOTA	213 - 57
	♦APD	
	♦CDIL	
	CEN	
	CRI	
	♦DIT	
	GDC	
	HTN	
	IDC	
	MSC	
	NJS	
	SAR	
	SCN	
	SIEG	
	SPE	
	♦SPR	
	SST	
	UPI	
1N4756A	Δ♦MOTA	213 - 37
	♦ALGG	
	♦APD	
	CEN	
	CRI	
	HTN	
	IDC	
	♦MSC	
	NJS	
	SAR	
	SCN	
	♦SIEG	
	SPE	
	SST	
	THEF	
	TIC	
	UPI	
1N4757	Δ♦MOTA	214 - 53
	♦APD	
	♦CDIL	
	CEN	
	CRI	
	♦DIT	
	GDC	
	HTN	
	IDC	
	MSC	
	NJS	
	SAR	
	SCN	
	SIEG	
	SPE	
	♦SPR	
	SST	
	UPI	
1N4757A	Δ♦MOTA	214 - 34
	♦ALGG	
	♦APD	
	CEN	
	CRI	
	HTN	
	IDC	
	♦MSC	
	NJS	
	SAR	
cont.next col.		

TYPE No.	MFRS	Pg&Line
1N4757A (cont.)	♦SIEG	
	SPE	
	SST	
	THEF	
	UPI	
1N4758	Δ♦MOTA	215 - 41
	♦APD	
	♦CDIL	
	CEN	
	CRI	
	♦DIT	
	GDC	
	HTN	
	IDC	
	MSC	
	NJS	
	SAR	
	SCN	
	SIEG	
	SPE	
	SST	
	UPI	
1N4758A	Δ♦MOTA	215 - 20
	♦ALGG	
	♦APD	
	CEN	
	CRI	
	HTN	
	IDC	
	♦MSC	
	NJS	
	SAR	
	SCN	
	♦SIEG	
	SPE	
	SST	
	THEF	
	UPI	
1N4759	Δ♦MOTA	216 - 46
	♦APD	
	♦CDIL	
	CEN	
	CRI	
	♦DIT	
	GDC	
	HTN	
	IDC	
	MSC	
	NJS	
	SAR	
	SCN	
	SIEG	
	SPE	
	SST	
	UPI	
1N4759A	Δ♦MOTA	216 - 26
	♦ALGG	
	♦APD	
	CEN	
	CRI	
	HTN	
	IDC	
	♦MSC	
	NJS	
	SAR	
	SCN	
	♦SIEG	
	SPE	
	SST	
	THEF	
	UPI	
1N4760	Δ♦MOTA	217 - 27
	♦APD	
	♦CDIL	
	CEN	
	CRI	
	♦DIT	
	GDC	
	HTN	
	IDC	
	MSC	
	NJS	
	SAR	
	SCN	
	SIEG	
	SPE	
	SST	
	UPI	
1N4760A	Δ♦MOTA	217 - 7
	♦ALGG	
	♦APD	
	CEN	
	CRI	
	HTN	
	IDC	
	♦MSC	
	NJS	
	SAR	
	SCN	
	♦SIEG	
	SPE	
	SST	
	THEF	
	UPI	
	WAB	
1N4761	Δ♦MOTA	218 - 9
	APD	
	♦CDIL	
	CEN	
	CRI	
	♦DIT	
	GDC	
	HTN	
	IDC	
	MSC	
	NJS	
	SAR	
	SCN	
	SIEG	
	SST	
	UPI	
1N4761A	Δ♦MOTA	217 -189
	♦ALGG	
	APD	
	CEN	
	CRI	
	HTN	
	IDC	
	♦MSC	
	NJS	
	SAR	
	SCN	
	♦SIEG	
	SPE	
	SST	
	THEF	
	UPI	
1N4762	Δ♦MOTA	218 -189
	APD	
	♦CDIL	
	CEN	
	CRI	
	♦DIT	
	GDC	
	HTN	
	IDC	
	MSC	
	NJS	
	SAR	
	SCN	
	SIEG	
	SPE	
	SST	
	UPI	
1N4762A	Δ♦MOTA	218 -169
	♦ALGG	
	APD	
	CEN	
	HTN	
	IDC	
	♦MSC	
	NJS	
	SAR	
	SCN	
	♦SIEG	
	SPE	
	SST	
	THEF	
	UPI	
1N4763	Δ♦MOTA	219 -168
	♦CDIL	
	CEN	
	♦DIT	
	GDC	
	HTN	
	IDC	
	MSC	
	NJS	
	SAR	
	SCN	
	SIEG	
	SPE	
	SST	
	UPI	
1N4763A	Δ♦MOTA	219 -151
	♦ALGG	
	CEN	
	HTN	
	IDC	
	♦MSC	
	NJS	
	SAR	
	SCN	
	♦SIEG	
	SPE	
	SST	
	THEF	
	UPI	
1N4764	Δ♦MOTA	220 -129
	♦CDIL	
	CEN	
	♦DIT	
	GDC	
	HTN	
	IDC	
cont.next page		

Δ-Registered with JEDEC by this manufacturer

♦-Mfr's data sheet available in microfilm service

1. TYPE No. CROSS INDEX

IN TYPE NUMBER SEQUENCE

TYPE No.	MFRS	Pg&Line
1N4764		
(cont.)	MSC	
	NJS	SAR
	SCN	SIEG
	SPE	SST
		UPI
1N4764A	Δ♦MOTA	220 -110
	♦ALGG	CEN
	CRI	HTN
	IDC	♦MSC
	NJS	SAR
	SCN	♦SIEG
	SPE	SST
	THEF	UPI
1N4765	Δ♦MOTA	184 -141
	♦APD	CDI
	CODI	GSE
	HTN	IDC
	♦MSC	SAR
	SCN	♦SIEG
	THEF	UPI
1N4765A	Δ♦MOTA	184 -142
	♦APD	CDI
	CODI	GSE
	HTN	IDC
	♦MSC	♦SIEG
	THEF	UPI
1N4765B	IDC	184 -109
	MSC	
1N4766	Δ♦MOTA	184 -143
	♦APD	CDI
	CODI	GSE
	HTN	IDC
	♦MSC	SAR
	SCN	♦SIEG
	THEF	UPI
1N4766A	Δ♦MOTA	184 -144
	♦APD	CDI
	CODI	GSE
	HTN	IDC
	♦MSC	SIEG
	THEF	UPI
1N4766B	IDC	184 -110
	MSC	
1N4767	Δ♦MOTA	184 -145
	♦APD	CDI
	CODI	GSE
	HTN	IDC
	♦MSC	SAR
	SCN	♦SIEG
	THEF	UPI
1N4767A	Δ♦MOTA	184 -146
	♦APD	CDI
	CODI	GSE
	HTN	IDC
	♦MSC	♦SIEG
	THEF	UPI
1N4767B	IDC	184 -111
	MSC	
1N4768	Δ♦MOTA	184 -147
	♦APD	CDI
	CODI	GSE
	HTN	IDC
	♦MSC	SCN
	SIEG	THEF
		UPI
1N4768A	Δ♦MOTA	184 -148
	♦APD	CDI
	CODI	GSE
	HTN	IDC
	♦MSC	♦SIEG
	THEF	UPI
1N4768B	IDC	184 -112
	MSC	
1N4769	Δ♦MOTA	184 -149
	♦APD	CDI
	CODI	GSE
	HTN	IDC
	♦MSC	SCN
	♦SIEG	THEF
		UPI
1N4769A	Δ♦MOTA	184 -150
	♦APD	CDI
	CODI	GSE
	HTN	IDC
	♦MSC	♦SIEG
	THEF	UPI
1N4769B	IDC	184 -113
	MSC	
1N4770	Δ♦MOTA	184 -151
	♦APD	CDI
	CODI	GSE
	HTN	IDC
	♦MSC	SCN
	♦SIEG	THEF
		UPI
1N4770A	Δ♦MOTA	184 -152
	♦APD	CDI
	CODI	GSE
	HTN	IDC
	♦MSC	♦SIEG
	THEF	UPI
1N4770B	IDC	184 -114
	MSC	
1N4771	Δ♦MOTA	184 -153
	♦APD	CDI
	CODI	GSE
	HTN	IDC
	♦MSC	SCN
	♦SIEG	THEF
		UPI
1N4771A	Δ♦MOTA	184 -154
	♦APD	CDI
cont.next col.		

TYPE No.	MFRS	Pg&Line
1N4771A		
(cont.)	CODI	
	GSE	HTN
	IDC	♦MSC
	SIEG	THEF
		UPI
1N4771B	IDC	184 -115
	MSC	
1N4772	Δ♦MOTA	184 -155
	♦APD	CDI
	CODI	GSE
	HTN	IDC
	♦MSC	♦SIEG
	♦THEF	UPI
1N4772A	Δ♦MOTA	184 -156
	♦APD	CDI
	CODI	GSE
	HTN	IDC
	♦MSC	♦SIEG
	THEF	UPI
1N4772B	IDC	184 -116
	MSC	
1N4773	Δ♦MOTA	184 -157
	♦APD	CDI
	CODI	GSE
	HTN	IDC
	♦MSC	♦SIEG
	THEF	UPI
1N4773A	Δ♦MOTA	184 -158
	♦APD	CDI
	CODI	GSE
	HTN	IDC
	♦MSC	♦SIEG
	THEF	UPI
1N4773B	IDC	184 -117
	MSC	
1N4774	Δ♦MOTA	184 -159
	♦APD	CDI
	CODI	GSE
	HTN	IDC
	♦MSC	♦SIEG
	SPE	THEF
		UPI
1N4774A	Δ♦MOTA	184 -160
	♦APD	CDI
	CODI	GSE
	HTN	IDC
	♦MSC	♦SIEG
	THEF	UPI
1N4774B	IDC	184 -118
	MSC	
1N4775	Δ♦MOTA	183 - 73
	♦APD	CDI
	CODI	♦GSE
	HTN	IDC
	♦MSC	♦SIEG
	THEF	UPI
1N4775A	Δ♦MOTA	183 - 74
	♦APD	CDI
	CODI	♦GSE
	HTN	IDC
	♦MSC	♦SIEG
	THEF	UPI
1N4775B	IDC	183 - 61
	MSC	
1N4776	Δ♦MOTA	183 - 75
	♦APD	CDI
	CODI	♦GSE
	HTN	IDC
	♦MSC	SIEG
	THEF	UPI
1N4776A	Δ♦MOTA	183 - 76
	♦APD	CDI
	CODI	♦GSE
	HTN	IDC
	♦MSC	♦SIEG
	THEF	UPI
1N4776B	IDC	183 - 62
	MSC	
1N4777	Δ♦MOTA	183 - 77
	♦APD	CDI
	CODI	♦GSE
	HTN	IDC
	♦MSC	♦SIEG
	THEF	UPI
1N4777A	Δ♦MOTA	183 - 78
	♦APD	CDI
	CODI	♦GSE
	HTN	IDC
	♦MSC	♦SIEG
	THEF	UPI
1N4777B	IDC	183 - 63
	MSC	
1N4778	Δ♦MOTA	183 - 79
	♦APD	CDI
	CODI	♦GSE
	HTN	IDC
	♦MSC	♦SIEG
	THEF	UPI
1N4778A	Δ♦MOTA	183 - 80
	♦APD	CDI
	CODI	♦GSE
	HTN	IDC
	♦MSC	♦SIEG
	THEF	UPI
1N4778B	IDC	183 - 64
	MSC	
1N4779	Δ♦MOTA	183 - 81
	♦APD	CDI
	CODI	♦GSE
	HTN	IDC
	♦MSC	♦SIEG
	THEF	UPI

TYPE No.	MFRS	Pg&Line
1N4779A	Δ♦MOTA	183 - 82
	♦APD	CDI
	CODI	♦GSE
	HTN	IDC
	♦MSC	♦SIEG
	THEF	UPI
1N4779B	IDC	183 - 65
	MSC	
1N4780	Δ♦MOTA	183 - 83
	♦APD	CDI
	CODI	♦GSE
	HTN	IDC
	♦MSC	♦SIEG
	THEF	UPI
1N4780A	Δ♦MOTA	183 - 84
	♦APD	CDI
	CODI	♦GSE
	HTN	IDC
	♦MSC	♦SIEG
	THEF	UPI
1N4780B	IDC	183 - 66
	MSC	
1N4781	Δ♦MOTA	183 - 85
	APD	CDI
	CODI	♦GSE
	HTN	IDC
	♦MSC	♦SIEG
	THEF	UPI
1N4781A	Δ♦MOTA	183 - 86
	♦APD	CDI
	CODI	♦GSE
	HTN	IDC
	♦MSC	♦SIEG
	THEF	UPI
1N4781B	IDC	183 - 67
	MSC	
1N4782	Δ♦MOTA	183 - 87
	♦APD	CDI
	CODI	♦GSE
	HTN	IDC
	♦MSC	♦SIEG
	THEF	UPI
1N4782A	Δ♦MOTA	183 - 88
	♦APD	CDI
	CODI	♦GSE
	HTN	IDC
	♦MSC	♦SIEG
	THEF	UPI
1N4782B	IDC	183 - 68
	MSC	
1N4783	Δ♦MOTA	183 - 89
	♦APD	CDI
	CODI	♦GSE
	HTN	IDC
	♦MSC	♦SIEG
	SPE	THEF
		UPI
1N4783A	Δ♦MOTA	183 - 90
	♦APD	CDI
	CODI	♦GSE
	HTN	IDC
	♦MSC	♦SIEG
	THEF	UPI
1N4783B	IDC	183 - 69
	MSC	
1N4784	Δ♦MOTA	183 - 91
	♦APD	CDI
	CODI	♦GSE
	HTN	IDC
	♦MSC	♦SIEG
	SPE	THEF
		UPI
1N4784A	Δ♦MOTA	183 - 92
	♦APD	CDI
	CODI	♦GSE
	HTN	IDC
	♦MSC	♦SIEG
	THEF	UPI
1N4784B	IDC	183 - 70
	MSC	
1N4785	CEN	232 - 82
	IDI	NJS
	SPE	SST
1N4816	Δ♦PRX	283 - 87
	CEN	CODI
	CRI	EDL
	ETC	HTN
	IDC	INR
	INRJ	MAL
	MEHK	NJS
	SCN	SPE
	STI	UPI
		WAB
1N4817	Δ♦PRX	283 -137
	CEN	CODI
	CRI	♦DIT
	EDL	ETC
	HTN	IDC
	INR	INRJ
	MAL	MEHK
	NJS	SCN
	SPE	STI
	UPI	WAB
1N4818	Δ♦PRX	283 -201
	CEN	CODI
	CRI	♦DIT
	EDL	ETC
	HTN	IDC
	INR	INRJ
	MAL	MEHK
	NJS	SCN
	SPE	STI
	UPI	WAB

TYPE No.	MFRS	Pg&Line
1N4819	Δ♦PRX	284 - 44
	CEN	CODI
	CRI	♦DIT
	EDL	ETC
	HTN	INR
	INRJ	MAL
	MEHK	NJS
	SCN	SPE
	STI	UPI
		WAB
1N4820	Δ♦PRX	284 - 89
	CEN	CODI
	CRI	EDL
	ETC	HTN
	IDC	INR
	INRJ	MAL
	MEHK	NJS
	SCN	SPE
	SSY	STI
	UPI	WAB
1N4821	Δ♦PRX	284 -149
	CEN	CODI
	CRI	♦DIT
	EDL	ETC
	HTN	IDC
	INR	INRJ
	MAL	MEHK
	NJS	SCN
	SPE	STI
		WAB
1N4822	Δ♦PRX	284 -192
	CEN	CODI
	CRI	♦DIT
	EDL	ETC
	HTN	IDC
	INR	INRJ
	MAL	MEHK
	NJS	SCN
	SPE	STI
	UPI	WAB
1N4824	SPE	259 - 47
1N4827	CEN	241 - 67
	IDC	STI
1N4828	IDC	232 - 5
	MSC	UPI
1N4829	APD	232 - 18
	CODI	EAS
	GDC	IDC
	SPE	UPI
1N4830	APD	232 - 20
	CODI	EAS
	GDC	IDC
	SPE	UPI
1N4831	CEN	185 -159
	MSC	SCN
1N4831A	CEN	185 -158
	MSC	SCN
		SPE
1N4831B	CEN	185 -157
	MSC	SCN
1N4832	CEN	188 - 18
	MSC	SCN
1N4832A	CEN	188 - 17
	MSC	SCN
1N4832B	CEN	188 - 16
	MSC	SCN
1N4833	CEN	189 -132
	MSC	SCN
		SPE
1N4833A	CEN	189 -131
		MSC
1N4833B	CEN	189 -130
1N4834	CEN	191 -107
	MSC	SCN
1N4834A	CEN	191 -106
	MSC	SCN
1N4834B	CEN	191 -105
	MSC	SCN
1N4835	CEN	193 - 51
	MSC	SCN
1N4835A	CEN	193 - 50
	MSC	SCN
1N4835B	CEN	193 - 49
	MSC	SCN
1N4836	CEN	195 -106
	MSC	SCN
1N4836A	CEN	195 -105
	MSC	SCN
1N4836B	CEN	195 -104
	MSC	SCN
1N4837	CEN	196 -195
	MSC	SCN
1N4837A	CEN	196 -194
	MSC	SCN
1N4837B	CEN	196 -193
	MSC	SCN
1N4838	CEN	199 - 5
	MSC	SCN
1N4838A	CEN	199 - 4
	MSC	SCN
1N4838B	CEN	199 - 3
	MSC	SCN
1N4839	CEN	200 -204
	MSC	SCN
1N4839A	CEN	200 -203
	MSC	SCN
1N4839B	CEN	200 -202
	MSC	SCN
1N4840	CEN	202 -104
	MSC	SCN
1N4840A	CEN	202 -103
	MSC	SCN
1N4840B	CEN	202 -102
	MSC	SCN

TYPE No.	MFRS	Pg&Line
1N4841	CEN	203 -199
	MSC	SCN
1N4841A	CEN	203 -198
	MSC	SCN
1N4841B	CEN	203 -197
	MSC	SCN
1N4842	CEN	205 -142
	MSC	SCN
1N4842A	CEN	205 -141
	MSC	SCN
1N4842B	CEN	205 -140
	MSC	SCN
1N4843	CEN	207 - 66
	MSC	SCN
1N4843A	CEN	207 - 65
	MSC	SCN
1N4843B	CEN	207 - 64
	MSC	SCN
1N4844	CEN	208 -159
	MSC	SCN
1N4844A	CEN	208 -158
	MSC	SCN
1N4844B	CEN	208 -157
	MSC	SCN
1N4845	CEN	210 - 11
	MSC	SCN
		SPE
1N4845A	CEN	210 - 10
	MSC	SCN
1N4845B	CEN	210 - 9
	MSC	SCN
1N4846	CEN	211 - 48
	MSC	SCN
1N4846A	CEN	211 - 47
	MSC	SCN
1N4846B	CEN	211 - 46
	MSC	SCN
1N4847	CEN	212 - 57
	MSC	SCN
1N4847A	CEN	212 - 56
	MSC	SCN
1N4847B	CEN	212 - 55
	MSC	SCN
1N4848	CEN	213 - 73
	MSC	SCN
		SPE
1N4848A	CEN	213 - 72
	MSC	SCN
1N4848B	CEN	213 - 71
	MSC	SCN
1N4849	CEN	214 - 68
	MSC	SCN
1N4849A	CEN	214 - 67
	MSC	SCN
1N4849B	CEN	214 - 66
	MSC	SCN
1N4850	CEN	215 - 58
	MSC	SCN
		SPE
1N4850A	CEN	215 - 57
	MSC	SCN
1N4850B	CEN	215 - 56
	MSC	SCN
1N4851	CEN	216 - 62
	MSC	SCN
1N4851A	CEN	216 - 61
	MSC	SCN
1N4851B	CEN	216 - 60
	MSC	SCN
1N4852	CEN	217 - 43
	MSC	SCN
1N4852A	CEN	217 - 42
	MSC	SCN
1N4852B	CEN	217 - 41
	MSC	SCN
1N4853	CEN	218 - 26
	MSC	SCN
1N4853A	CEN	218 - 25
	MSC	SCN
1N4853B	CEN	218 - 24
	MSC	SCN
1N4854	CEN	219 - 6
	MSC	SCN
1N4854A	CEN	219 - 5
	MSC	SCN
1N4854B	CEN	219 - 4
	MSC	SCN
1N4855	CEN	219 -184
	MSC	SCN
1N4855A	CEN	219 -183
	MSC	SCN
1N4855B	CEN	219 -182
	MSC	SCN
1N4856	CEN	220 -146
	MSC	SCN
1N4856A	CEN	220 -145
	MSC	SCN
1N4856B	CEN	220 -144
	MSC	SCN
1N4857	CEN	221 -109
	MSC	SCN
1N4857A	CEN	221 -108
	MSC	SCN
1N4857B	CEN	221 -107
	MSC	SCN
1N4858	CEN	222 - 61
	MSC	SCN
		SPE
1N4858A	CEN	222 - 60
	MSC	SCN
		SPE
1N4858B	CEN	222 - 59
	MSC	SCN

Δ-Registered with JEDEC by this manufacturer

♦-Mfr's data sheet available in microfilm service

1. TYPE No. CROSS INDEX

IN TYPE NUMBER SEQUENCE

TYPE No.	MFRS	Pg&Line
1N4859	CEN	223 - 16
	MSC	
	SCN	
1N4859A	CEN	223 - 15
	MSC	
	SCN	
	SPE	
1N4859B	CEN	223 - 14
	MSC	
	SCN	
1N4860	CEN	224 - 49
	MSC	
	SCN	
1N4860A	CEN	224 - 48
	MSC	
	SCN	
	SPE	
1N4860B	CEN	224 - 47
	MSC	
	SCN	
1N4861	♦APD	249 -138
	CEN	
	GDC	
	HITJ	
	IDC	
	SPE	
1N4862	♦APD	249 -139
	CEN	
	GDC	
	HITJ	
	IDC	
1N4863	CEN	246 - 56
	GDC	
	HITJ	
	MSC	
1N4864	CEN	247 - 98
	GDC	
	IDC	
	MSC	
	SPE	
	SSI	
	SSY	
	WAB	
1N4865	ΔINR	411 - 84
	AMX	
	IDC	
	INRJ	
	SCN	
	SSI	
	UTX	
1N4866	ΔINR	417 -165
	AMX	
	IDC	
	INRJ	
	SCN	
	SSI	
	UTX	
1N4867	ΔINR	419 -143
	AMX	
	IDC	
	INRJ	
	SCN	
	SSI	
	UTX	
1N4868	ΔINR	423 -201
	AMX	
	IDC	
	INRJ	
	SCN	
	SSI	
	UTX	
1N4869	ΔINR	425 -189
	AMX	
	IDC	
	INRJ	
	SCN	
	SSI	
	UTX	
1N4870	ΔINR	427 -161
	AMX	
	IDC	
	INRJ	
	SCN	
	SPE	
	SSI	
	UTX	
1N4871	ΔINR	428 -137
	AMX	
	IDC	
	INRJ	
	SCN	
	SSI	
	UTX	
1N4872	ΔINR	429 -123
	AMX	
	IDC	
	INRJ	
	SCN	
	SSI	
	UTX	
1N4873	ΔINR	430 -184
	AMX	
	IDC	
	INRJ	
	SCN	
	SPE	
	SSI	
	UTX	
1N4874	ΔINR	431 -151
	AMX	
	IDC	
	INRJ	
	SCN	
	SSI	
	UTX	
1N4875	ΔINR	432 - 81
	AMX	
	IDC	
	INRJ	
	SCN	
	SSI	
	UTX	
1N4876	ΔINR	432 -189
	AMX	
	IDC	
	INRJ	
	SCN	
	SSI	
	UTX	
1N4877	ΔINR	433 - 65
	AMX	
	IDC	
	INRJ	
	SCN	
	SSI	
	UTX	
1N4878	CEN	305 -197
	EDL	
	IDC	
	SCN	
	SSI	
	WAB	
1N4879	CEN	308 - 66
	EDL	
	ETC	
	HSE	
	IDC	
	SCN	
	SSI	
	UPI	
1N4880	CEN	309 -101
	EDL	
	ETC	
	HSE	
	IDC	
	SSI	
	WAB	
1N4881	IDC	201 - 53
	MSC	
	TRWS	
1N4882	IDC	210 - 66
	MSC	
	TRWS	
1N4883	IDC	191 -156
	♦TRWS	
1N4884	IDC	201 - 44
	♦TRWS	
1N4887	ΔINR	433 -102
	AMX	
	INRJ	
	SCN	
1N4888	IDC	238 - 30
1N4889	TRWS	392 -195
1N4890	Δ♦MSC	176 - 31
	CODI	
	IDC	
	SCE	
	♦SIEG	
1N4890A	Δ♦MSC	176 - 32
cont.next col.		

TYPE No.	MFRS	Pg&Line
1N4890A		
(cont.)	CODI	
	IDC	
	SCE	
	♦SIEG	
1N4891	Δ♦MSC	176 - 33
	CODI	
	IDC	
	SCE	
	♦SIEG	
1N4891A	Δ♦MSC	176 - 34
	CODI	
	IDC	
	SCE	
	♦SIEG	
	SPE	
1N4892	Δ♦MSC	176 - 35
	CODI	
	IDC	
	SCE	
	♦SIEG	
1N4892A	Δ♦MSC	176 - 36
	CODI	
	IDC	
	SCE	
	♦SIEG	
1N4893	Δ♦MSC	176 - 37
	CODI	
	IDC	
	SCE	
	♦SIEG	
1N4893A	Δ♦MSC	176 - 38
	CODI	
	IDC	
	SCE	
	♦SIEG	
1N4894	Δ♦MSC	176 - 39
	CODI	
	IDC	
	SCE	
	♦SIEG	
1N4894A	Δ♦MSC	176 - 40
	CODI	
	IDC	
	SCE	
	♦SIEG	
1N4895	Δ♦MSC	176 - 41
	CODI	
	IDC	
	SCE	
	♦SIEG	
1N4895A	Δ♦MSC	176 - 42
	CODI	
	IDC	
	SCE	
	SIEG	
1N4896	Δ♦MSC	192 - 33
	CDI	
	CODI	
	IDC	
	SCE	
	♦SIEG	
1N4896A	Δ♦MSC	192 - 34
	CDI	
	CODI	
	IDC	
	SCE	
	♦SIEG	
1N4897	Δ♦MSC	192 - 35
	CDI	
	CODI	
	IDC	
	SCE	
	♦SIEG	
1N4897A	Δ♦MSC	192 - 36
	CDI	
	CODI	
	IDC	
	SCE	
	♦SIEG	
1N4898	Δ♦MSC	192 - 37
	CDI	
	CODI	
	IDC	
	SCE	
	♦SIEG	
1N4898A	Δ♦MSC	192 - 38
	CDI	
	CODI	
	IDC	
	SCE	
	♦SIEG	
1N4899	Δ♦MSC	192 - 39
	CDI	
	CODI	
	IDC	
	SCE	
	♦SIEG	
1N4899A	Δ♦MSC	192 - 40
	CDI	
	CODI	
	IDC	
	SCE	
	♦SIEG	
1N4900	Δ♦MSC	192 - 41
	CDI	
	CODI	
	IDC	
	SCE	
	♦SIEG	
1N4900A	Δ♦MSC	192 - 42
	CDI	
	CODI	
	IDC	
	SCE	
	♦SIEG	
1N4901	Δ♦MSC	192 - 43
	CDI	
	CODI	
	IDC	
	SCE	
	♦SIEG	
1N4901A	Δ♦MSC	192 - 44
	CDI	
	CODI	
	IDC	
	SCE	
	♦SIEG	
1N4902	Δ♦MSC	192 - 45
	CDI	
	CODI	
	IDC	
	SCE	
	♦SIEG	
1N4902A	Δ♦MSC	192 - 46
	CDI	
	CODI	
	IDC	
	SCE	
	♦SIEG	
1N4903	Δ♦MSC	192 - 47
	CDI	
	CODI	
	IDC	
	SCE	
	♦SIEG	
1N4903A	Δ♦MSC	192 - 48
	CDI	
	CODI	
	IDC	
	SCE	
	♦SIEG	
1N4904	Δ♦MSC	192 - 49
	CDI	
	CODI	
	IDC	
	SCE	
	♦SIEG	
1N4904A	Δ♦MSC	192 - 50
	CDI	
	CODI	
	IDC	
	SCE	
	♦SIEG	
1N4905	Δ♦MSC	192 - 51
	CDI	
	CODI	
	DIT	
	IDC	
	SCE	
	♦SIEG	
	SPE	
	UPI	
1N4905A	Δ♦MSC	192 - 52
cont.next col.		

TYPE No.	MFRS	Pg&Line
1N4905A		
(cont.)	CDI	
	CODI	
	IDC	
	SCE	
	♦SIEG	
1N4906	CDI	192 - 53
	CODI	
	IDC	
	♦MSC	
	SCE	
	♦SIEG	
1N4906A	Δ♦MSC	192 - 54
	CDI	
	CODI	
	IDC	
	SCE	
	♦SIEG	
1N4907	Δ♦MSC	192 - 55
	CDI	
	CODI	
	IDC	
	SCE	
	♦SIEG	
1N4907A	Δ♦MSC	192 - 56
	CDI	
	CODI	
	IDC	
	SCE	
	♦SIEG	
1N4908	Δ♦MSC	192 - 57
	CDI	
	CODI	
	IDC	
	SCE	
	♦SIEG	
1N4908A	CDI	192 - 58
	CODI	
	DIT	
	IDC	
	♦MSC	
	SCE	
	♦SIEG	
1N4909	Δ♦MSC	192 - 59
	CDI	
	CODI	
	IDC	
	SCE	
	♦SIEG	
1N4909A	Δ♦MSC	192 - 60
	CDI	
	CODI	
	DIT	
	IDC	
	SCE	
	♦SIEG	
1N4910	Δ♦MSC	192 - 61
	CDI	
	CODI	
	IDC	
	SCE	
	♦SIEG	
1N4910A	Δ♦MSC	192 - 62
	CDI	
	CODI	
	IDC	
	SCE	
	♦SIEG	
1N4911	CDI	192 - 63
	CODI	
	IDC	
	♦MSC	
	SCE	
	♦SIEG	
1N4911A	Δ♦MSC	192 - 64
	CDI	
	CODI	
	IDC	
	SCE	
	♦SIEG	
1N4912	Δ♦MSC	192 - 65
	CDI	
	CODI	
	IDC	
	SCE	
	♦SIEG	
1N4912A	Δ♦MSC	192 - 66
	CDI	
	CODI	
	IDC	
	SCE	
	♦SIEG	
1N4913	Δ♦MSC	192 - 67
	CDI	
	CODI	
	IDC	
	SCE	
	♦SIEG	
1N4913A	CDI	192 - 68
	CODI	
	IDC	
	♦MSC	
	SCE	
	♦SIEG	
1N4914	Δ♦MSC	192 - 69
	CDI	
	CODI	
	IDC	
	SCE	
	♦SIEG	
1N4914A	Δ♦MSC	192 - 70
	CDI	
	CODI	
	IDC	
	SCE	
	♦SIEG	
1N4915	Δ♦MSC	192 - 71
	CDI	
	CODI	
	IDC	
	SCE	
	♦SIEG	
1N4915A	Δ♦MSC	192 - 72
	CDI	
	CODI	
	IDC	
	SCE	
	♦SIEG	
1N4916	Δ♦MSC	199 -173
	CDI	
	CODI	
	IDC	
	SCE	
	♦SIEG	
1N4916A	Δ♦MSC	199 -174
	CDI	
	CODI	
	IDC	
	SCE	
	♦SIEG	
1N4917	Δ♦MSC	199 -175
	CDI	
	CODI	
	IDC	
	SCE	
	♦SIEG	
1N4917A	Δ♦MSC	199 -176
	CDI	
	CODI	
	IDC	
	SCE	
	♦SIEG	
1N4918	Δ♦MSC	199 -177
	CDI	
	CODI	
	IDC	
	SCE	
	♦SIEG	
1N4918A	Δ♦MSC	199 -178
	CDI	
	CODI	
	IDC	
	SCE	
	♦SIEG	
1N4919	Δ♦MSC	199 -179
	CDI	
	CODI	
	IDC	
	SCE	
	♦SIEG	
1N4919A	Δ♦MSC	199 -180
cont.next col.		

TYPE No.	MFRS	Pg&Line
1N4919A		
(cont.)	CDI	
	CODI	
	IDC	
	SCE	
	♦SIEG	
1N4920	Δ♦MSC	199 -181
	CDI	
	CODI	
	IDC	
	SCE	
	♦SIEG	
1N4920A	Δ♦MSC	199 -182
	CDI	
	CODI	
	IDC	
	SCE	
	♦SIEG	
1N4921	Δ♦MSC	199 -183
	CDI	
	CODI	
	IDC	
	SCE	
	♦SIEG	
1N4921A	CDI	199 -184
	CODI	
	IDC	
	♦MSC	
	SCE	
	♦SIEG	
1N4922	Δ♦MSC	199 -185
	CDI	
	CODI	
	IDC	
	SCE	
	♦SIEG	
1N4922A	Δ♦MSC	199 -186
	CDI	
	CODI	
	IDC	
	SCE	
	♦SIEG	
1N4923	Δ♦MSC	199 -187
	CDI	
	CODI	
	IDC	
	SCE	
	♦SIEG	
1N4923A	Δ♦MSC	199 -188
	CDI	
	CODI	
	IDC	
	SCE	
	♦SIEG	
1N4924	Δ♦MSC	199 -189
	CDI	
	CODI	
	IDC	
	SCE	
	♦SIEG	
1N4924A	Δ♦MSC	199 -190
	CDI	
	CODI	
	IDC	
	SCE	
	♦SIEG	
1N4925	Δ♦MSC	199 -191
	CDI	
	CODI	
	IDC	
	SCE	
	♦SIEG	
1N4925A	Δ♦MSC	199 -192
	CDI	
	CODI	
	IDC	
	SCE	
	♦SIEG	
1N4926	Δ♦MSC	199 -193
	CDI	
	CODI	
	IDC	
	SCE	
	♦SIEG	
1N4926A	Δ♦MSC	199 -194
	CDI	
	CODI	
	IDC	
	SCE	
	♦SIEG	
1N4927	CDI	199 -195
	CODI	
	IDC	
	♦MSC	
	SCE	
	♦SIEG	
1N4927A	Δ♦MSC	199 -196
	CDI	
	CODI	
	IDC	
	SCE	
	♦SIEG	
1N4928	Δ♦MSC	199 -197
	CDI	
	CODI	
	IDC	
	SCE	
	♦SIEG	
1N4928A	Δ♦MSC	199 -198
	CDI	
	CODI	
	IDC	
	SCE	
	♦SIEG	
1N4929	Δ♦MSC	199 -199
	CDI	
	CODI	
	IDC	
	SCE	
	♦SIEG	
1N4929A	Δ♦MSC	199 -200
	CDI	
	CODI	
	IDC	
	SCE	
	♦SIEG	
1N4930	Δ♦MSC	199 -201
	CDI	
	CODI	
	IDC	
	SCE	
	♦SIEG	
1N4930A	Δ♦MSC	199 -202
	CDI	
	CODI	
	IDC	
	SCE	
	♦SIEG	
1N4931	Δ♦MSC	199 -203
	CDI	
	CODI	
	IDC	
	SCE	
	♦SIEG	
1N4931A	Δ♦MSC	199 -204
	CDI	
	CODI	
	IDC	
	SCE	
	♦SIEG	
1N4932	Δ♦MSC	199 -205
	CDI	
	CODI	
	IDC	
	SCE	
	SIEG	
1N4932A	CDI	199 -206
	CODI	
	IDC	
	♦MSC	
	SCE	
	♦SIEG	
1N4933	CEN	257 -159
	♦DII	
	EDL	
	♦FEC	
	FGRS	
	♦FSC	
	♦GIC	
	HTN	
	IDC	

TYPE No.	MFRS	Pg&Line
1N4933		
(cont.)	♦ITTG	
	♦MOTA	
	RECT	
	SCN	
	SLD	
	SPE	
	SSI	
	SST	
	WAB	
1N4933G	♦DII	257 -206
1N4934	CEN	258 - 75
	♦DII	
	EDL	
	♦FEC	
	FGRS	
	♦FSC	
	♦GIC	
	HTN	
	IDC	
	♦ITTG	
	♦MOTA	
	RECT	
	SCN	
	SLD	
	SPE	
	SSI	
	SST	
	WAB	
1N4934G	♦DII	258 -152
1N4935	CEN	259 - 71
	♦DII	
	EDL	
	♦FEC	
	FGRS	
	♦FSC	
	♦GIC	
	HTN	
	IDC	
	♦ITTG	
	♦MOTA	
	RECT	
	SCN	
	SLD	
	SPE	
	SSI	
	SST	
	WAB	
1N4935G	♦DII	259 -156
1N4936	CEN	260 - 38
	♦DII	
	EDL	
	♦FEC	
	FGRS	
	♦FSC	
	♦GIC	
	HTN	
	IDC	
	♦ITTG	
	♦MOTA	
	RECT	
	SCN	
	SLD	
	SPE	
	SSI	
	SST	
	WAB	
1N4936G	♦DII	260 -115
1N4937	CEN	260 -165
	♦DII	
	EDL	
	♦FEC	
	FGRS	
	♦FSC	
	♦GIC	
	HTN	
	IDC	
	♦MOTA	
	RECT	
	SCN	
	SLD	
	SPE	
	SSI	
	SST	
	WAB	
1N4937G	♦DII	261 - 33
1N4938	Δ♦UNI	249 -103
	FSC	
	HITJ	
	HTN	
	IDC	
	MSC	
	SSI	
	SST	
1N4942	CEN	259 - 66
	♦DII	
	EDL	
	♦GIC	
	HTN	
	IDC	
	MSC	
	RECT	
	SCN	
	SEN	
	♦SSI	
	THEF	
	♦UNI	
1N4942G	♦DII	239 -101
1N4943	CEN	259 -189
	EDL	
	♦GIC	
	HTN	
	IDC	
	MSC	
	SCN	
	♦SSI	
	UNI	
1N4944	CEN	260 - 29
	♦DII	
	EDL	
	♦GIC	
	HTN	
	IDC	
	MSC	
	RECT	
	SCN	
	SEN	
	♦SSI	
	THEF	
	♦UNI	
1N4944G	♦DII	239 -195
1N4944GP	GIC	254 -176
1N4945	CEN	260 -123
	EDL	
	♦GIC	
	HTN	
	IDC	
	MSC	
	SCN	
	♦SSI	
	UNI	
1N4946	CEN	260 -203
	♦DII	
	EDL	
	♦GIC	
	HTN	
	IDC	
	MSC	
	RECT	
	SCN	
	SEN	
	♦SSI	
	THEF	
	♦UNI	
1N4946G	♦DII	240 - 49
1N4947	CEN	261 - 61
	♦DII	
	EDL	
	♦GIC	
	HTN	
	IDC	
	MSC	
	RECT	
	SCN	
	SEN	
	♦SSI	
	THEF	
	UNI	
	WAB	
1N4947G	♦DII	240 -102
1N4948	CEN	261 -134
	♦DII	
	EDL	
	♦GIC	
	HTN	
	IDC	
	MSC	
	RECT	
	SCN	
	SEN	
	♦SSI	
	THEF	
	UNI	
1N4948G	♦DII	240 -145
1N4949	IDC	248 - 89
	INRJ	
1N4950	IDC	231 - 35
	MSC	
	UPI	
1N4951	UPI	231 - 39
1N4952	UPI	231 - 40

Δ-Registered with JEDEC by this manufacturer

♦-Mfr's data sheet available in microfilm service

1. TYPE No. CROSS INDEX

IN TYPE NUMBER SEQUENCE

TYPE No.	MFRS	Pg&Line
1N4954	Δ♦UNI	379 - 10
	♦MSC	
	SCN	
	♦THEF	
	TRWS	
1N4955	Δ♦UNI	379 -122
	♦MSC	
	SCN	
	SPE	
	♦THEF	
	TRWS	
1N4956	Δ♦UNI	380 - 43
	♦MSC	
	SCN	
	♦THEF	
	TRWS	
1N4957	Δ♦UNI	380 -172
	♦MSC	
	SCN	
	♦THEF	
	TRWS	
1N4958	Δ♦UNI	381 - 71
	♦MSC	
	SCN	
	SPE	
	♦THEF	
	TRWS	
1N4959	Δ♦UNI	381 -184
	♦MSC	
	SCN	
	♦THEF	
	TRWS	
1N4960	Δ♦UNI	382 - 78
	♦MSC	
	SCN	
	♦THEF	
	TRWS	
1N4960D	MSC	382 - 79
	TRWS	
1N4961	Δ♦UNI	382 -194
	♦MSC	
	SCN	
	SPE	
	♦THEF	
	TRWS	
1N4962	Δ♦UNI	383 -158
	♦MSC	
	SCN	
	SPE	
	♦THEF	
	TRWS	
	UPI	
1N4963	Δ♦UNI	384 - 72
	♦MSC	
	SCN	
	♦THEF	
	TRWS	
1N4964	Δ♦UNI	385 - 24
	♦MSC	
	SCN	
	♦THEF	
	TRWS	
	WAB	
1N4965	Δ♦UNI	385 -178
	♦MSC	
	SCN	
	♦THEF	
	TRWS	
1N4966	Δ♦UNI	386 - 83
	♦MSC	
	SCN	
	♦THEF	
	TRWS	
1N4967	Δ♦UNI	386 -199
	♦MSC	
	SCN	
	SPE	
	♦THEF	
	TRWS	
1N4968	Δ♦UNI	387 -137
	♦MSC	
	SCN	
	SPE	
	♦THEF	
	TRWS	
1N4969	Δ♦UNI	388 - 57
	♦MSC	
	SCN	
	♦THEF	
	TRWS	
1N4970	Δ♦UNI	388 -162
	♦MSC	
	SCN	
	SPE	
	♦THEF	
	TRWS	
1N4971	Δ♦UNI	389 - 76
	♦MSC	
	SCN	
	SPE	
	♦THEF	
	TRWS	
1N4972	♦MSC	389 -180
	SCN	
	SPE	
	♦THEF	
	TRWS	
	♦UNI	
1N4973	Δ♦UNI	390 - 91
	♦MSC	
	SCN	
	♦THEF	
	TRWS	
1N4974	Δ♦UNI	391 - 22
	♦MSC	
	SCN	
	♦THEF	
	TRWS	
1N4975	Δ♦UNI	391 -161
	♦MSC	
	SCN	
	♦THEF	
	TRWS	
	WAB	
1N4976	Δ♦UNI	392 - 69
	♦MSC	
	SCN	
	♦THEF	
	TRWS	
1N4977	Δ♦UNI	392 -196
	♦MSC	
	SCN	
	SPE	
	♦THEF	
	TRWS	
1N4978	Δ♦UNI	393 - 85
	♦MSC	
	SCN	
	♦THEF	
	TRWS	
1N4979	Δ♦UNI	393 -196
	♦MSC	
	SCN	
	♦THEF	
	TRWS	
1N4980	Δ♦UNI	394 -113
	♦MSC	
	SCN	
	♦THEF	
	TRWS	
1N4981	Δ♦UNI	395 - 24
	♦MSC	
	SCN	
	♦THEF	
	TRWS	
1N4982	Δ♦UNI	395 -114
	♦MSC	
	SCN	
	♦THEF	
	TRWS	
1N4983	♦MSC	396 - 50
	SCN	
	♦THEF	
	TRWS	
	♦UNI	
1N4984	Δ♦UNI	396 -136
	♦MSC	
	SCN	
	♦THEF	
	TRWS	
1N4985	Δ♦UNI	397 - 25
	♦MSC	
	SCN	
	SPE	
	♦THEF	
	TRWS	
1N4986	Δ♦UNI	397 -162
	♦MSC	
	SCN	
	♦THEF	
	TRWS	
1N4987	Δ♦UNI	398 - 52
	♦MSC	
	SCN	
	♦THEF	
	TRWS	
1N4988	Δ♦UNI	398 -165
	♦MSC	
	SCN	
	♦THEF	
	TRWS	
1N4989	Δ♦UNI	399 - 74
	♦MSC	
	SCN	
	SPE	
	♦THEF	
	TRWS	
1N4990	Δ♦UNI	399 -145
	♦MSC	
	SCN	
	TRWS	
1N4991	Δ♦UNI	399 -156
	♦MSC	
	SCN	
	TRWS	
1N4992	Δ♦UNI	399 -172
	♦MSC	
	SCN	
	TRWS	
1N4993	Δ♦UNI	399 -183
	♦MSC	
	SCN	
	TRWS	
1N4994	Δ♦UNI	400 - 2
	♦MSC	
	SCN	
	TRWS	
1N4995	Δ♦UNI	400 - 11
	♦MSC	
	SCN	
	TRWS	
1N4996	Δ♦UNI	400 - 25
	♦MSC	
	SCN	
	TRWS	
1N4997	♦DIT	287 -174
	HTN	
	IDC	
	♦MOTA	
	SLD	
	SPE	
	SSI	
	SST	
	TRWS	
	WAB	
1N4998	♦DIT	288 - 11
	HTN	
	IDC	
	♦MOTA	
	SLD	
	SPE	
	SSI	
	SST	
	WAB	
1N4999	♦DIT	288 - 82
	HTN	
	♦MOTA	
	SLD	
	SPE	
	SSI	
1N5000	HTN	288 -180
	♦MOTA	
	SLD	
	SPE	
	SSI	
	SST	
1N5001	♦DIT	289 - 45
	HTN	
	♦MOTA	
	SLD	
	SPE	
	SSI	
	SST	
1N5002	♦DIT	289 -119
	HTN	
	♦MOTA	
	SLD	
	SSI	
	SST	
1N5003	HTN	402 -160
	♦MOTA	
	SLD	
	SPE	
	SSI	
	SST	
1N5004	CEN	280 - 63
	HTN	
	IDC	
	SCN	
	SSI	
1N5005	CEN	280 -151
	HTN	
	IDC	
	SCN	
	SPE	
	SSI	
1N5006	CEN	281 - 58
	HTN	
	IDC	
	SCN	
	SSI	
1N5007	CEN	281 -175
	HTN	
	IDC	
	SCN	
	SSI	
1N5008	CEN	166 -106
	♦GSE	
	HTN	
	IDC	
	SCN	
1N5008A	CEN	166 -104
	♦GSE	
	HTN	
	IDC	
	SCN	
1N5009	CEN	167 - 77
	♦GSE	
	HTN	
	IDC	
	SCN	
1N5009A	CEN	167 - 75
	♦GSE	
	HTN	
	IDC	
	SCN	
1N5010	CEN	168 - 62
	♦GSE	
	HTN	
	IDC	
	SCN	
1N5010A	CEN	168 - 60
	♦GSE	
	HTN	
	IDC	
	SCN	
1N5011	CEN	169 - 82
	♦GSE	
	HTN	
	IDC	
	SCN	
	SPE	
1N5011A	CEN	169 - 80
	♦GSE	
	HTN	
	IDC	
	SCN	
1N5012	CEN	170 -139
	♦GSE	
	HTN	
	IDC	
	SCN	
1N5012A	CEN	170 -137
	♦GSE	
	HTN	
	IDC	
	SCN	
1N5013	CEN	172 - 12
	♦GSE	
	HTN	
	IDC	
	SCN	
1N5013A	CEN	172 - 10
	♦GSE	
	IDC	
	SCN	
1N5014	CEN	173 -110
cont.next col.		
1N5014		
(cont.)	♦GSE	
	HTN	
	IDC	
	SCN	
1N5014A	CEN	173 -108
	♦GSE	
	IDC	
	SCN	
1N5015	ΔMSC	175 -175
	CEN	
	♦GSE	
	HTN	
	IDC	
	SCN	
1N5015A	CEN	175 -173
	♦GSE	
	IDC	
	SCN	
1N5016	ΔMSC	178 -180
	CEN	
	♦GSE	
	HTN	
	IDC	
	SCN	
1N5016A	ΔMSC	178 -178
	CEN	
	♦GSE	
	IDC	
	SCN	
1N5017	ΔMSC	180 -173
	CEN	
	♦GSE	
	HTN	
	IDC	
	SCN	
	SPE	
1N5017A	ΔMSC	180 -170
	CEN	
	♦GSE	
	IDC	
	SCN	
	SPE	
1N5018	ΔMSC	182 -163
	CEN	
	♦GSE	
	HTN	
	IDC	
	SCN	
	SPE	
1N5018A	ΔMSC	182 -159
	CEN	
	♦GSE	
	IDC	
	SCN	
1N5019	ΔMSC	185 -197
	CEN	
	♦GSE	
	HTN	
	IDC	
	SCN	
1N5019A	ΔMSC	185 -194
	CEN	
	♦GSE	
	IDC	
	SCN	
1N5020	ΔMSC	188 - 63
	CEN	
	♦GSE	
	HTN	
	IDC	
	SCN	
1N5020A	ΔMSC	188 - 59
	CEN	
	♦GSE	
	IDC	
	SCN	
1N5021	ΔMSC	189 -176
	CEN	
	♦GSE	
	HTN	
	IDC	
	SCN	
1N5021A	ΔMSC	189 -172
	CEN	
	♦GSE	
	IDC	
	SCN	
1N5022	ΔMSC	191 -151
	CEN	
	♦GSE	
	HTN	
	IDC	
	SCN	
1N5022A	ΔMSC	191 -147
	CEN	
	♦GSE	
	IDC	
	SCN	
	SPE	
1N5023	ΔMSC	193 - 92
	CEN	
	♦GSE	
	HTN	
	IDC	
	SCN	
1N5023A	ΔMSC	193 - 89
	CEN	
	♦GSE	
	IDC	
	SCN	
1N5024	ΔMSC	194 - 33
	CEN	
	♦GSE	
	HTN	
	IDC	
	SCN	
1N5024A	ΔMSC	194 - 32
	CEN	
	♦GSE	
	IDC	
	SCN	
1N5025	ΔMSC	195 -147
	CEN	
	♦GSE	
	HTN	
	IDC	
	SCN	
1N5025A	ΔMSC	195 -144
	CEN	
	♦GSE	
	IDC	
	SCN	
1N5026	ΔMSC	197 - 26
	CEN	
	♦GSE	
	HTN	
	IDC	
	SCN	
1N5026A	ΔMSC	197 - 23
	CEN	
	♦GSE	
	IDC	
	SCN	
1N5027	ΔMSC	197 -148
	CEN	
	♦GSE	
	HTN	
	IDC	
	SCN	
	SPE	
1N5027A	ΔMSC	197 -147
	CEN	
	♦GSE	
	IDC	
	SCN	
1N5028	ΔMSC	199 - 46
	CEN	
	♦GSE	
	HTN	
	IDC	
	SCN	
1N5028A	ΔMSC	199 - 42
	CEN	
	♦GSE	
	IDC	
	SCN	
1N5029	ΔMSC	199 -151
	CEN	
	♦GSE	
	HTN	
	IDC	
	SCN	
1N5029A	ΔMSC	199 -150
	CEN	
	♦GSE	
	IDC	
	SCN	
1N5030	ΔMSC	201 - 39
	CEN	
	♦GSE	
	HTN	
	IDC	
	SCN	
	SPE	
1N5030A	ΔMSC	201 - 35
	CEN	
	♦GSE	
	IDC	
	SCN	
1N5031	ΔMSC	202 -145
	CEN	
	♦GSE	
	HTN	
	IDC	
	SCN	
1N5031A	ΔMSC	202 -142
	CEN	
	♦GSE	
	IDC	
	SCN	
1N5032	ΔMSC	204 - 32
	CEN	
	♦GSE	
	HTN	
	IDC	
	SCN	
1N5032A	ΔMSC	204 - 29
	CEN	
	♦GSE	
	IDC	
	SCN	
1N5033	ΔMSC	204 -126
	CEN	
	♦GSE	
	HTN	
	IDC	
	SCN	
1N5033A	ΔMSC	204 -125
	CEN	
	♦GSE	
	IDC	
	SCN	
	SPE	
1N5034	ΔMSC	205 -187
	CEN	
	♦GSE	
	HTN	
	IDC	
	SCN	
1N5034A	ΔMSC	205 -183
	CEN	
	♦GSE	
	IDC	
	SCN	
1N5035	ΔMSC	207 -111
	CEN	
	♦GSE	
	HTN	
	IDC	
	SCN	
1N5035A	ΔMSC	207 -107
	CEN	
	♦GSE	
	IDC	
	SCN	
1N5036	ΔMSC	208 -204
	CEN	
	♦GSE	
	HTN	
	IDC	
	SCN	
	SPE	
1N5036A	ΔMSC	208 -200
	CEN	
	♦GSE	
	IDC	
	SCN	
1N5037	ΔMSC	210 - 52
	CEN	
	♦GSE	
	HTN	
	IDC	
	SCN	
1N5037A	ΔMSC	210 - 49
	CEN	
	♦GSE	
	IDC	
	SCN	
1N5038	ΔMSC	211 - 89
	CEN	
	♦GSE	
	HTN	
	IDC	
	SCN	
1N5038A	ΔMSC	211 - 86
	CEN	
	♦GSE	
	IDC	
	SCN	
1N5039	ΔMSC	212 -100
	CEN	
	♦GSE	
	HTN	
	IDC	
	SCN	
1N5039A	ΔMSC	212 - 97
	CEN	
	♦GSE	
	IDC	
	SCN	
	SPE	
1N5040	ΔMSC	212 -137
	CEN	
	♦GSE	
	HTN	
	IDC	
	SCN	
1N5040A	ΔMSC	212 -136
	CEN	
	♦GSE	
	IDC	
	SCN	
1N5041	ΔMSC	213 -117
	CEN	
	♦GSE	
	HTN	
	IDC	
	SCN	
1N5041A	ΔMSC	213 -114
	CEN	
	♦GSE	
	IDC	
	SCN	
1N5042	ΔMSC	213 -160
	CEN	
	♦GSE	
	HTN	
	IDC	
	SCN	
1N5042A	ΔMSC	213 -159
	CEN	
	♦GSE	
	IDC	
	SCN	
1N5043	ΔMSC	214 -112
	CEN	
	♦GSE	
	HTN	
	IDC	
	SCN	
1N5043A	ΔMSC	214 -109
	CEN	
	♦GSE	
	IDC	
	SCN	
1N5044	ΔMSC	214 -143
	CEN	
	♦GSE	
	HTN	
	IDC	
	SCN	
1N5044A	ΔMSC	214 -142
	CEN	
	♦GSE	
	IDC	
	SCN	
1N5045	ΔMSC	215 -101
	CEN	
	♦GSE	
	HTN	
	IDC	
	SCN	
1N5045A	ΔMSC	215 - 98
	CEN	
	♦GSE	
	IDC	
	SCN	
1N5046	ΔMSC	216 -105
	CEN	
	♦GSE	
	HTN	
	IDC	
	SCN	
1N5046A	ΔMSC	216 -102
	CEN	
	♦GSE	
	IDC	
	SCN	
1N5047	ΔMSC	217 - 86
	CEN	
	♦GSE	
	HTN	
	IDC	
	SCN	
1N5047A	ΔMSC	217 - 83
	CEN	
	♦GSE	
	IDC	
	SCN	
1N5048	ΔMSC	218 - 69
	CEN	
	♦GSE	
	HTN	
	IDC	
	SCN	
1N5048A	ΔMSC	218 - 66
	CEN	
	♦GSE	
	IDC	
	SCN	
1N5049	ΔMSC	219 - 43
	CEN	
	♦GSE	
	HTN	
	IDC	
	SCN	
1N5049A	ΔMSC	219 - 41
	CEN	
	♦GSE	
	IDC	
	SCN	
1N5050	ΔMSC	220 - 22
	CEN	
	♦GSE	
	HTN	
	IDC	
	SCN	
1N5050A	ΔMSC	220 - 20
	CEN	
	♦GSE	
	IDC	
	SCN	
	SPE	
1N5051	ΔMSC	220 -184
	CEN	
	♦GSE	
	HTN	
	IDC	
	SCN	
1N5051A	ΔMSC	220 -182
	CEN	
	♦GSE	
	IDC	
	SCN	
1N5052	CEN	285 - 26
	CODI	
	ETC	
	HTN	
	IDC	
	INR	
	INRJ	
	MEHK	
	♦PRX	
	SCN	
	SSY	
	STI	
	STR	
	WAB	
1N5053	CEN	285 - 53
	CODI	
	ETC	
	HTN	
	IDC	
	INR	
	INRJ	
	MEHK	
	♦PRX	
	SCN	
	SPE	
	SSY	
	STI	
	STR	
	WAB	
1N5054	CEN	402 - 55
	CODI	
	ETC	
	HTN	
	IDC	
	INR	
	INRJ	
	MEHK	
	♦PRX	
	SCN	
	SPE	
	STI	
	STR	
	WAB	
1N5055	CEN	280 - 64
	CODI	
	ETC	
	HTN	
	IDC	
	SLD	
	SPE	
	SST	
	UPI	
1N5056	CEN	280 -152
	CODI	
	ETC	
	HTN	
	IDC	
	SLD	
	SPE	
	SST	
	UPI	
1N5057	CEN	279 - 87
	CODI	
	HTN	
	IDC	
	SLD	
	SST	
	UPI	
1N5058	CEN	279 - 94
	CODI	
	ETC	
	HTN	
	IDC	
	SLD	
	SST	
	UPI	
1N5059	Δ♦GESY	253 -105
	♦ALGG	
	CEN	
	ELT	
	GDC	
	♦GIC	
	HITJ	
	HTN	
	IDC	
	MSC	
	NJS	
	SOD	
	SLD	
	SPE	
	♦SSI	
	SST	
	UPI	
	WAB	
1N5060	Δ♦GESY	255 - 20
	♦ALGG	
	ASI	
	CEN	
	ELT	
	GDC	
	♦GIC	
	HITJ	
	HTN	
	MSC	
	♦MULB	
	NJS	
	♦PHIN	
	RTCF	
	SLD	
	SOD	
	SPE	
	♦SSI	
	SST	
	UPI	
	♦VALG	
	WAB	
1N5061	Δ♦GESY	255 -144
	♦ALGG	
	ASI	
	CEN	
	ELT	
	GDC	
	♦GIC	
	HITJ	
	HTN	
cont.next page		

Δ-Registered with JEDEC by this manufacturer

♦-Mfr's data sheet available in microfilm service

1. TYPE No. CROSS INDEX

IN TYPE NUMBER SEQUENCE

TYPE No.	MFRS	Pg&Line
1N5061		
(cont.)	MSC	
♦MULB	NJS	
♦PHIN	RTCF	
SLD	SOD	
SPE	♦SSI	
SST	TIC	
UPI	♦VALG	
	WAB	
1N5062	♦ALGG	256 - 1
CEN	ELT	
GDC	♦GESY	
♦GIC	HITJ	
HTN	IDC	
MSC	♦MULB	
♦PHIN	RTCF	
SLD	SOD	
SPE	♦SSI	
SST	♦VALG	
1N5063	Δ♦UNI	178 -185
♦MSC	♦TRWS	
1N5064	Δ♦UNI	180 -178
♦MSC	SPE	
	♦TRWS	
1N5065	Δ♦UNI	182 -168
IDC	♦MSC	
	♦TRWS	
1N5066	Δ♦UNI	185 -202
♦MSC	♦TRWS	
1N5067	Δ♦UNI	188 - 68
♦MSC	♦TRWS	
1N5068	ΔUNI	189 -181
MSC	♦TRWS	
1N5069	Δ♦UNI	193 - 97
♦MSC	♦TRWS	
1N5070	Δ♦UNI	194 - 38
♦MSC	SPE	
	♦TRWS	
1N5071	Δ♦UNI	195 -152
♦MSC	♦TRWS	
1N5072	Δ♦UNI	197 - 31
♦MSC	♦TRWS	
1N5073	Δ♦UNI	199 - 51
♦MSC	♦TRWS	
1N5074	Δ♦UNI	202 -150
♦MSC	♦TRWS	
1N5075	Δ♦UNI	204 - 37
♦MSC	♦TRWS	
1N5076	Δ♦UNI	205 -192
♦MSC	♦TRWS	
	UPI	
1N5077	Δ♦UNI	207 -116
♦MSC	TRWS	
1N5078	Δ♦UNI	209 - 3
♦MSC	♦TRWS	
1N5079	Δ♦UNI	210 - 57
♦MSC	♦TRWS	
1N5080	ΔUNI	211 - 94
	MSC	
1N5081	Δ♦UNI	211 -126
♦MSC	♦TRWS	
1N5082	ΔUNI	212 -105
	MSC	
1N5083	Δ♦UNI	212 -138
♦MSC	♦TRWS	
1N5084	ΔUNI	213 -122
	MSC	
1N5085	Δ♦UNI	213 -161
♦MSC	♦TRWS	
1N5086	ΔUNI	214 -117
	MSC	
1N5087	Δ♦UNI	215 -106
♦MSC	♦TRWS	
1N5088	Δ♦UNI	215 -155
♦MSC	♦TRWS	
1N5089	ΔUNI	216 -110
MSC	♦TRWS	
1N5090	Δ♦UNI	217 - 91
	MSC	
1N5091	Δ♦UNI	217 -116
♦MSC	♦TRWS	
1N5092	Δ♦UNI	218 - 74
♦MSC	♦TRWS	
1N5093	Δ♦UNI	218 -105
♦MSC	♦TRWS	
1N5094	Δ♦UNI	219 - 48
	MSC	
1N5095	ΔUNI	220 - 27
	MSC	
1N5096	Δ♦UNI	221 -147
	♦MSC	
1N5097	Δ♦UNI	222 -103
	♦MSC	
1N5098	ΔUNI	223 - 54
	♦MSC	
1N5099	ΔUNI	223 -123
	♦MSC	
1N5100	Δ♦UNI	225 - 25
	♦MSC	
1N5101	Δ♦UNI	225 - 89
♦MSC	TRWS	
1N5102	Δ♦UNI	226 - 47
♦MSC	SPE	
	TRWS	
1N5103	Δ♦UNI	226 -102
♦MSC	TRWS	
1N5104	Δ♦UNI	227 - 42
♦MSC	TRWS	
1N5105	Δ♦UNI	227 - 74
♦MSC	TRWS	
1N5106	Δ♦UNI	227 - 83
♦MSC	TRWS	
1N5107	Δ♦UNI	227 - 93
♦MSC	TRWS	

TYPE No.	MFRS	Pg&Line
1N5108	Δ♦UNI	227 -107
MSC	TRWS	
1N5109	Δ♦UNI	227 -112
♦MSC	TRWS	
1N5110	Δ♦UNI	227 -122
♦MSC	TRWS	
1N5111	Δ♦UNI	227 -131
♦MSC	TRWS	
1N5112	Δ♦UNI	227 -145
MSC	TRWS	
1N5113	Δ♦UNI	227 -149
♦MSC	TRWS	
1N5114	Δ♦UNI	227 -158
♦MSC	TRWS	
1N5115	Δ♦UNI	227 -165
♦MSC	TRWS	
1N5116	Δ♦UNI	227 -175
MSC	TRWS	
1N5117	Δ♦UNI	227 -188
♦MSC	TRWS	
1N5118	Δ♦UNI	383 - 94
MSC	SCN	
	TRWS	
1N5119	Δ♦UNI	390 - 64
MSC	SCN	
SPE	TRWS	
1N5120	Δ♦UNI	390 -173
MSC	SCN	
	TRWS	
1N5121	Δ♦UNI	391 -113
MSC	SCN	
	TRWS	
1N5122	Δ♦UNI	392 -163
MSC	SCN	
	TRWS	
1N5123	Δ♦UNI	393 -168
MSC	SCN	
	TRWS	
1N5124	Δ♦UNI	394 - 91
MSC	SCN	
	TRWS	
1N5125	Δ♦UNI	395 - 3
MSC	SCN	
	TRWS	
1N5126	Δ♦UNI	397 -111
MSC	SCN	
	TRWS	
1N5127	Δ♦UNI	398 -125
MSC	SCN	
	TRWS	
1N5128	Δ♦UNI	399 - 50
MSC	SCN	
	TRWS	
1N5129	Δ♦UNI	399 -165
MSC	SCN	
	TRWS	
1N5130	Δ♦UNI	399 -176
MSC	SCN	
	TRWS	
1N5131	Δ♦UNI	399 -192
MSC	SCN	
	TRWS	
1N5132	Δ♦UNI	400 - 4
MSC	SCN	
	TRWS	
1N5133	Δ♦UNI	400 - 18
MSC	TRWS	
1N5134	Δ♦UNI	400 - 27
MSC	SCN	
SPE	TRWS	
1N5162	Δ♦INR	407 -197
INRJ	SSI	
1N5165	ΔHPA	436 - 78
	TRWM	
1N5166	ΔHPA	436 - 79
	TRWM	
1N5167	ΔHPA	436 - 80
	TRWM	
1N5170	ΔSOD	251 -159
ASI	CEI	
CEN	HTN	
IDC	SCN	
♦SSI	STI	
UPI	WAB	
1N5171	ΔSOD	252 -134
ASI	CEN	
CODI	HTN	
IDC	SCN	
SPE	♦SSI	
STI	UPI	
	WAB	
1N5172	ΔSOD	253 -106
ASI	CEN	
CODI	HTN	
IDC	SCN	
♦SSI	STI	
UPI	WAB	
1N5173	ΔSOD	254 -149
ASI	CEN	
CODI	HTN	
IDC	SCN	
SPE	♦SSI	
STI	UPI	
	WAB	
1N5174	ΔSOD	255 - 21
ASI	CEN	
CODI	HTN	
IDC	SCN	
♦SSI	STI	
UPI	WAB	
1N5175	ΔSOD	255 - 61
ASI	CEN	
CODI	HTN	

cont.next col.

TYPE No.	MFRS	Pg&Line
1N5175		
(cont.)	IDC	
SCN	♦SSI	
STI	WAB	
1N5176	ΔSOD	286 -159
ASI	CEN	
CODI	HTN	
IDC	SCN	
SPE	♦SSI	
SSY	STI	
	WAB	
1N5177	ΔSOD	256 - 2
CEN	CODI	
HTN	IDC	
SCN	♦SSI	
	STI	
1N5178	ΔSOD	256 - 75
CEN	CODI	
HTN	IDC	
SCN	♦SSI	
	STI	
1N5179	APD	231 - 41
CODI	EAS	
	UPI	
1N5180	TRWS	290 - 34
	UPI	
1N5181	EDL	256 -202
♦MSC	SCN	
SPE	♦SSI	
♦THEF	UNI	
1N5182	EDL	257 - 2
♦MSC	SCN	
SPE	♦SSI	
♦THEF	UNI	
1N5183	EDL	425 -139
♦MSC	SCN	
♦SSI	♦THEF	
	UNI	
1N5184	EDL	427 - 61
♦MSC	SCN	
♦SSI	♦THEF	
	UNI	
1N5185	CEN	257 -187
♦GIC	SSI	
	♦TRWS	
1N5186	Δ♦UNI	253 - 56
CEN	♦GIC	
MSC	SEN	
♦SSI	TRWS	
1N5187	Δ♦UNI	254 - 47
CEN	♦GIC	
MSC	SEN	
♦SSI	TRWS	
1N5188	Δ♦UNI	254 -177
CEN	♦GIC	
MSC	SEN	
SPE	♦SSI	
	TRWS	
1N5189	CEN	260 -130
♦GIC	SEN	
SSI	TRWS	
1N5190	Δ♦UNI	255 - 84
CEN	♦GIC	
MSC	SEN	
♦SSI	TRWS	
1N5194	ΔUNI	235 -147
♦APD	CEN	
MSC	SPE	
STI	TIC	
	UPI	
1N5195	ΔUNI	235 -148
MSC	SPE	
	STI	
1N5196	ΔUNI	235 -149
MSC	STI	
1N5197	CEN	287 -189
EDL	HTN	
MAL	SCN	
SSI	UPI	
1N5198	ASI	288 - 26
CEN	EDL	
HTN	MAL	
SCN	SPE	
SSI	UPI	
	WAB	
1N5199	ASI	288 -105
CEN	EDL	
HTN	MAL	
SCN	SPE	
SSI	UPI	
	WAB	
1N5200	CEN	288 -205
EDL	MAL	
SCN	SSI	
	UPI	
1N5201	CEN	289 - 71
EDL	MAL	
SCN	SSI	
1N5206	TRWS	286 -128
1N5207	TRWS	290 - 59
1N5208	ΔUNI	234 - 32
♦APD	CEN	
	UPI	
1N5209	ΔUNI	233 -185
♦APD	CEN	
1N5210	ΔUNI	233 - 49
1N5211	CEN	280 -153
SSI	UPI	
1N5212	CEN	281 - 59
SSI	UPI	
1N5213	CEN	281 -176
	SSI	
1N5214	CEN	279 - 41
	SSI	

TYPE No.	MFRS	Pg&Line
1N5215	CEN	276 -175
SSI	UPI	
1N5216	CEN	276 -214
SSI	UPI	
1N5217	CEN	277 - 36
	SSI	
1N5218	CEN	276 - 49
	SSI	
1N5219	CEN	244 -203
	MSC	
1N5220	CEN	231 -187
SPE	UPI	
1N5221	Δ♦MOTA	164 - 64
CEN	CODI	
CRI	FGRS	
HTN	IDC	
KSI	♦MSC	
RHM	SIEG	
SPE	SPR	
UPI	WAB	
1N5221A	Δ♦MOTA	164 - 59
CEN	CODI	
CRI	HTN	
IDC	KSI	
MSC	RHM	
	UPI	
1N5221B	Δ♦MOTA	164 - 47
♦ALGG	CEN	
CODI	CRI	
HTN	IDC	
♦INC	KSI	
MSC	NECE	
RHM	♦SIEG	
THEF	UPI	
	WAB	
1N5222	Δ♦MOTA	164 -103
CEN	CODI	
CRI	FGRS	
HTN	IDC	
KSI	♦MSC	
RHM	SIEG	
SPE	SPR	
	UPI	
1N5222A	Δ♦MOTA	164 -100
CEN	CODI	
CRI	HTN	
IDC	KSI	
MSC	RHM	
SPE	UPI	
1N5222B	Δ♦MOTA	164 - 98
♦ALGG	CEN	
CODI	CRI	
HTN	IDC	
♦INC	KSI	
MSC	NECE	
RHM	♦SIEG	
THEF	UPI	
1N5223	Δ♦MOTA	164 -185
CEN	CODI	
CRI	♦DIT	
FGRS	HITJ	
HTN	IDC	
KSI	♦MSC	
NJS	RHM	
SIEG	SPE	
SPR	UPI	
	WAB	
1N5223A	Δ♦MOTA	164 -180
CEN	CODI	
CRI	♦DIT	
HITJ	HTN	
IDC	KSI	
MSC	NJS	
RHM	SPE	
	UPI	
1N5223B	Δ♦MOTA	164 -164
♦ALGG	CEN	
CODI	CRI	
♦DIT	HITJ	
HTN	IDC	
♦INC	KSI	
MSC	NECE	
NJS	RHM	
♦SIEG	SPE	
SSY	THEF	
UPI	WAB	
1N5224	Δ♦MOTA	165 - 27
CEN	CODI	
CRI	♦DIT	
FGRS	HITJ	
HTN	IDC	
KSI	♦MSC	
NJS	RHM	
SIEG	SPR	
	UPI	
1N5224A	Δ♦MOTA	165 - 24
CEN	CODI	
CRI	♦DIT	
HITJ	HTN	
IDC	KSI	
MSC	NJS	
RHM	SPE	
	UPI	
1N5224B	Δ♦MOTA	165 - 21
♦ALGG	CEN	
CODI	CRI	
♦DIT	HITJ	
HTN	IDC	
♦INC	KSI	
MSC	NECE	
NJS	RHM	
♦SIEG	SPE	
THEF	UPI	

TYPE No.	MFRS	Pg&Line
1N5225	CEN	165 -124
CODI	CRI	
♦DIT	FGRS	
HITJ	HTN	
IDC	KSI	
♦MOTA	♦MSC	
NJS	RHM	
SIEG	SPE	
SPR	UPI	
	WAB	
1N5225A	CEN	165 -118
CODI	CRI	
♦DIT	HITJ	
HTN	IDC	
KSI	♦MOTA	
MSC	NJS	
RHM	SPE	
	UPI	
1N5225B	♦ALGG	165 - 97
CEN	CODI	
CRI	♦DIT	
HITJ	HTN	
IDC	♦INC	
KSI	♦MOTA	
MSC	NECE	
NJS	RHM	
♦SIEG	THEF	
	UPI	
1N5226	Δ♦MOTA	166 - 59
♦APD	CDIL	
CEN	CODI	
CRI	♦DIT	
FGRS	HITJ	
HTN	IDC	
♦ITTG	KSI	
♦MSC	NJS	
RHM	SIEG	
SPE	SPR	
UPI	WAB	
1N5226A	Δ♦MOTA	166 - 52
♦APD	CEN	
CODI	CRI	
♦DIT	HITJ	
HTN	IDC	
ITTG	KSI	
MSC	NJS	
RHM	UPI	
1N5226B	Δ♦MOTA	166 - 32
♦ALGG	♦APD	
CEN	CODI	
CRI	♦DIT	
HITJ	HTN	
IDC	♦INC	
ITTG	KSI	
MSC	NECE	
NJS	RHM	
♦SIEG	SPE	
THEF	UPI	
1N5227	♦APD	167 - 23
CDIL	CEN	
CODI	CRI	
♦DIT	FGRS	
HITJ	HTN	
IDC	♦ITTG	
KSI	♦MOTA	
♦MSC	NJS	
RHM	SIEG	
SPE	SPR	
UPI	WAB	
1N5227A	Δ♦MOTA	167 - 16
♦APD	CEN	
CODI	CRI	
♦DIT	HITJ	
HTN	IDC	
ITTG	KSI	
MSC	NJS	
RHM	UPI	
	WAB	
1N5227B	Δ♦MOTA	166 -207
♦ALGG	♦APD	
CEN	CODI	
CRI	♦DIT	
HITJ	HTN	
IDC	♦INC	
ITTG	KSI	
MSC	NECE	
NJS	RHM	
♦SIEG	THEF	
UPI	WAB	
1N5228	Δ♦MOTA	167 -200
♦APD	CDIL	
CEN	CODI	
CRI	♦DIT	
FGRS	HITJ	
HTN	IDC	
♦ITTG	KSI	
♦MSC	NJS	
RHM	SIEG	
SPE	SPR	
	UPI	
1N5228A	Δ♦MOTA	167 -193
♦APD	CEN	
CODI	CRI	
♦DIT	HITJ	
HTN	IDC	
ITTG	KSI	
MSC	NJS	
RHM	SPE	
	UPI	
1N5228B	Δ♦MOTA	167 -173
♦ALGG	♦APD	
CEN	CODI	
CRI	♦DIT	

cont.next page

1. TYPE No. CROSS INDEX

IN TYPE NUMBER SEQUENCE

TYPE No.	MFRS	Pg&Line
1N5228B		
(cont.)	HITJ	
HTN	IDC	
♦INC	ITTG	
KSI	MSC	
NECE	NJS	
RHM	♦SIEG	
SPE	THEF	
	UPI	
1N5229	Δ♦MOTA	169 - 14
♦APD	CDIL	
CEN	CODI	
CRI	♦DIT	
FGRS	HITJ	
HTN	IDC	
♦ITTG	KSI	
♦MSC	NJS	
RHM	SIEG	
SPE	SPR	
	UPI	
1N5229A	Δ♦MOTA	169 - 7
♦APD	CEN	
CODI	CRI	
♦DIT	HITJ	
HTN	IDC	
ITTG	KSI	
MSC	NJS	
RHM	UPI	
1N5229B	Δ♦MOTA	168 -198
♦ALGG	♦APD	
CEN	CODI	
CRI	♦DIT	
HITJ	HTN	
IDC	♦INC	
ITTG	KSI	
MSC	NECE	
NJS	RHM	
♦SIEG	THEF	
UPI	WAB	
1N5230	Δ♦MOTA	170 - 61
♦APD	CDIL	
CEN	CODI	
CRI	♦DIT	
FGRS	HITJ	
HTN	IDC	
♦ITTG	KSI	
♦MSC	NJS	
RHM	SIEG	
SPE	SPR	
	UPI	
1N5230A	Δ♦MOTA	170 - 54
♦APD	CEN	
CODI	CRI	
♦DIT	HITJ	
HTN	IDC	
ITTG	KSI	
MSC	NJS	
RHM	SPE	
	UPI	
1N5230B	Δ♦MOTA	170 - 31
♦ALGG	♦APD	
CEN	CODI	
CRI	♦DIT	
HITJ	HTN	
IDC	♦INC	
ITTG	KSI	
MSC	NECE	
NJS	RHM	
♦SIEG	SPE	
THEF	UPI	
1N5231	Δ♦MOTA	171 -141
♦APD	CDIL	
CEN	CODI	
CRI	♦DIT	
ETC	FGRS	
♦FSC	HITJ	
HTN	IDC	
♦ITTG	KSI	
♦MSC	NJS	
RHM	SIEG	
SPE	SPR	
UPI	WAB	
1N5231A	Δ♦MOTA	171 -134
♦APD	CEN	
CODI	CRI	
♦DIT	FGRS	
FSC	HITJ	
HTN	IDC	
ITTG	KSI	
MSC	NJS	
UPI	WAB	
1N5231B	Δ♦MOTA	171 -112
♦ALGG	♦APD	
CEN	CODI	
CRI	♦DIT	
FGRS	♦FSC	
HITJ	HTN	
IDC	INC	
ITTG	KSI	
MSC	NECE	
NJS	RHM	
♦SIEG	SPE	
THEF	UPI	
	WAB	
1N5232	Δ♦MOTA	173 - 21
♦APD	CDIL	
CEN	CODI	
CRI	♦DIT	
ETC	FGRS	
FSC	HITJ	
HTN	IDC	
♦ITTG	KSI	
♦MSC	NJS	
cont.next col.		

TYPE No.	MFRS	Pg&Line
1N5232		
(cont.)	RHM	
SIEG	SPE	
SPR	STR	
	UPI	
1N5232A	Δ♦MOTA	173 - 13
♦APD	CEN	
CODI	CRI	
♦DIT	FGRS	
FSC	HITJ	
HTN	IDC	
ITTG	KSI	
MSC	NJS	
RHM	SPE	
STR	UPI	
	WAB	
1N5232B	Δ♦MOTA	172 -200
♦ALGG	♦APD	
CEN	CODI	
CRI	♦DIT	
FGRS	♦FSC	
HITJ	HTN	
IDC	INC	
ITTG	KSI	
MSC	NECE	
NJS	RHM	
♦SIEG	SPE	
STR	THEF	
UPI	WAB	
1N5233	Δ♦MOTA	174 - 13
♦APD	CDIL	
CEN	CODI	
CRI	♦DIT	
ETC	FGRS	
HITJ	HTN	
IDC	♦ITTG	
KSI	♦MSC	
NJS	RHM	
SIEG	SPE	
SPR	UPI	
1N5233A	Δ♦MOTA	174 - 8
♦APD	CEN	
CODI	CRI	
♦DIT	FGRS	
HITJ	HTN	
IDC	ITTG	
KSI	MSC	
NJS	RHM	
SPE	UPI	
1N5233B	Δ♦MOTA	173 -206
♦ALGG	♦APD	
CEN	CODI	
CRI	♦DIT	
FGRS	HITJ	
HTN	IDC	
INC	ITTG	
KSI	MSC	
NECE	NJS	
RHM	♦SIEG	
SPE	SSY	
THEF	UPI	
	WAB	
1N5234	Δ♦MOTA	175 - 85
♦APD	CDIL	
CEN	CODI	
CRI	♦DIT	
ETC	FGRS	
FSC	HITJ	
HTN	IDC	
♦ITTG	KSI	
♦MSC	NJS	
RHM	SIEG	
SPE	SPR	
UPI	WAB	
1N5234A	Δ♦MOTA	175 - 78
♦APD	CEN	
CODI	CRI	
♦DIT	FGRS	
FSC	HITJ	
HTN	IDC	
ITTG	KSI	
MSC	NJS	
RHM	SPE	
	UPI	
1N5234B	Δ♦MOTA	175 - 52
♦ALGG	♦APD	
CEN	CODI	
CRI	♦DIT	
FGRS	♦FSC	
HITJ	HTN	
IDC	INC	
ITTG	KSI	
MSC	NECE	
NJS	RHM	
♦SIEG	SPE	
THEF	UPI	
	WAB	
1N5235	Δ♦MOTA	178 - 56
♦APD	CDIL	
CEN	CODI	
CRI	♦DIT	
ETC	FGRS	
FSC	HITJ	
HTN	IDC	
♦ITTG	KSI	
♦MSC	NJS	
RHM	SIEG	
SPE	SPR	
UPI	WAB	
1N5235A	Δ♦MOTA	178 - 49
♦APD	CEN	
CODI	CRI	
♦DIT	FGRS	
cont.next col.		

TYPE No.	MFRS	Pg&Line
1N5235A		
(cont.)	FSC	
HITJ	HTN	
IDC	ITTG	
KSI	MSC	
NJS	RHM	
SPE	UPI	
	WAB	
1N5235B	Δ♦MOTA	178 - 21
♦ALGG	♦APD	
CEN	CODI	
CRI	♦DIT	
FGRS	♦FSC	
HITJ	HTN	
IDC	INC	
ITTG	KSI	
MSC	NECE	
NJS	RHM	
♦SIEG	SPE	
THEF	UPI	
	WAB	
1N5236	Δ♦MOTA	180 - 53
♦APD	CDIL	
CEN	CODI	
CRI	ETC	
FGRS	FSC	
HITJ	HTN	
IDC	♦ITTG	
KSI	♦MSC	
NJS	RHM	
SIEG	SPE	
SPR	UPI	
	WAB	
1N5236A	Δ♦MOTA	180 - 45
♦APD	CEN	
CODI	CRI	
FGRS	FSC	
HITJ	HTN	
IDC	ITTG	
KSI	MSC	
NJS	RHM	
	UPI	
1N5236B	Δ♦MOTA	180 - 20
♦ALGG	♦APD	
CEN	CODI	
CRI	FGRS	
♦FSC	HITJ	
HTN	IDC	
INC	ITTG	
KSI	MSC	
NECE	NJS	
RHM	♦SIEG	
THEF	UPI	
	WAB	
1N5237	Δ♦MOTA	182 - 34
♦APD	CDIL	
CEN	CODI	
CRI	ETC	
FGRS	FSC	
HITJ	HTN	
IDC	♦ITTG	
KSI	♦MSC	
NJS	RHM	
SIEG	SPR	
	UPI	
1N5237A	Δ♦MOTA	182 - 25
♦APD	CEN	
CODI	CRI	
FGRS	FSC	
HITJ	HTN	
IDC	INC	
ITTG	KSI	
MSC	NJS	
RHM	SPE	
	UPI	
1N5237B	Δ♦MOTA	181 -203
♦ALGG	♦APD	
CEN	CODI	
CRI	♦FSC	
HITJ	HTN	
IDC	INC	
ITTG	KSI	
MSC	NECE	
NJS	RHM	
♦SIEG	SPE	
THEF	UPI	
	WAB	
1N5238	Δ♦MOTA	183 -181
♦APD	CDIL	
CEN	CODI	
CRI	ETC	
FGRS	HITJ	
HTN	IDC	
♦ITTG	KSI	
♦MSC	NJS	
RHM	♦SIEG	
SPR	UPI	
1N5238A	Δ♦MOTA	183 -177
♦APD	CEN	
CODI	CRI	
FGRS	HITJ	
HTN	IDC	
INC	ITTG	
KSI	MSC	
NJS	RHM	
	UPI	
1N5238B	Δ♦MOTA	183 -171
♦ALGG	♦APD	
CEN	CODI	
CRI	FGRS	
HITJ	HTN	
IDC	INC	
INRJ	ITTG	
cont.next col.		

TYPE No.	MFRS	Pg&Line
1N5238B		
(cont.)	KSI	
MSC	NECE	
NJS	RHM	
♦SIEG	SPE	
THEF	UPI	
1N5239	Δ♦MOTA	185 - 69
♦APD	CDIL	
CEN	CODI	
CRI	ETC	
FGRS	FSC	
HITJ	HTN	
IDC	♦ITTG	
KSI	♦MSC	
NJS	RHM	
SIEG	SPE	
SPR	UPI	
1N5239A	Δ♦MOTA	185 - 59
♦APD	CEN	
CODI	CRI	
FGRS	FSC	
HITJ	HTN	
IDC	ITTG	
KSI	MSC	
NJS	RHM	
	UPI	
1N5239B	Δ♦MOTA	185 - 34
♦ALGG	♦APD	
CEN	♦CODI	
CRI	FGRS	
♦FSC	HITJ	
HTN	IDC	
INC	ITTG	
KSI	MSC	
NECE	NJS	
RHM	♦SIEG	
SPE	SSY	
THEF	UPI	
	WAB	
1N5240	Δ♦MOTA	187 -116
♦APD	CDIL	
CEN	CODI	
CRI	ETC	
FGRS	FSC	
HITJ	HTN	
IDC	♦ITTG	
KSI	♦MSC	
NJS	RHM	
SIEG	SPE	
SPR	UPI	
1N5240A	Δ♦MOTA	187 -108
♦APD	CEN	
CODI	CRI	
FGRS	FSC	
HITJ	HTN	
IDC	INC	
ITTG	KSI	
MSC	NJS	
RHM	SPE	
UPI	WAB	
1N5240B	Δ♦MOTA	187 - 78
♦ALGG	♦APD	
CEN	CODI	
CRI	FGRS	
♦FSC	HITJ	
HTN	IDC	
INC	ITTG	
KSI	MSC	
NECE	NJS	
RHM	♦SIEG	
SPE	THEF	
UPI	WAB	
1N5241	Δ♦MOTA	189 - 53
♦APD	CDIL	
CEN	CODI	
CRI	FGRS	
HITJ	HTN	
IDC	♦ITTG	
KSI	♦MSC	
NJS	RHM	
SIEG	SPR	
	UPI	
1N5241A	Δ♦MOTA	189 - 45
♦APD	CEN	
CODI	CRI	
FGRS	HITJ	
HTN	IDC	
INC	ITTG	
KSI	MSC	
NJS	RHM	
	UPI	
1N5241B	Δ♦MOTA	189 - 19
♦ALGG	♦APD	
CEN	CODI	
CRI	FGRS	
HITJ	HTN	
IDC	INC	
ITTG	KSI	
MSC	NECE	
NJS	RHM	
♦SIEG	SPE	
THEF	UPI	
	WAB	
1N5242	Δ♦MOTA	191 - 12
♦APD	CDIL	
CEN	CODI	
CRI	FGRS	
♦FSC	HITJ	
HTN	IDC	
♦ITTG	KSI	
♦MSC	NJS	
RHM	SIEG	
SPE	SPR	
UPI	WAB	

TYPE No.	MFRS	Pg&Line
1N5242A	Δ♦MOTA	191 - 4
♦APD	CEN	
CODI	CRI	
FGRS	FSC	
HITJ	HTN	
IDC	INC	
ITTG	KSI	
MSC	NJS	
RHM	SPE	
	UPI	
1N5242B	Δ♦MOTA	190 -190
♦ALGG	♦APD	
CEN	CODI	
CRI	FGRS	
FSC	HITJ	
HTN	IDC	
INC	ITTG	
KSI	MSC	
NECE	NJS	
RHM	♦SIEG	
SPE	THEF	
UPI	WAB	
1N5243	♦APD	192 -187
CDIL	CEN	
CODI	CRI	
FGRS	HITJ	
HTN	IDC	
♦ITTG	KSI	
♦MOTA	♦MSC	
NJS	RHM	
SIEG	SPE	
SPR	UPI	
1N5243A	Δ♦MOTA	192 -179
♦APD	CEN	
CODI	CRI	
FGRS	HITJ	
HTN	IDC	
ITTG	KSI	
MSC	NJS	
RHM	UPI	
1N5243B	Δ♦MOTA	192 -156
♦ALGG	♦APD	
CEN	CODI	
CRI	FGRS	
HITJ	HTN	
IDC	INC	
ITTG	KSI	
MSC	NECE	
NJS	RHM	
♦SIEG	SPE	
THEF	UPI	
	WAB	
1N5244	Δ♦MOTA	193 -199
♦APD	CDIL	
CEN	CODI	
CRI	FGRS	
HITJ	HTN	
IDC	♦ITTG	
KSI	♦MSC	
NJS	RHM	
SIEG	SPE	
SPR	UPI	
1N5244A	Δ♦MOTA	193 -192
♦APD	CEN	
CODI	CRI	
FGRS	HITJ	
HTN	IDC	
ITTG	KSI	
MSC	NJS	
RHM	UPI	
1N5244B	Δ♦MOTA	193 -185
♦ALGG	♦APD	
CEN	CODI	
CRI	FGRS	
HITJ	HTN	
IDC	INC	
ITTG	KSI	
MSC	NECE	
NJS	RHM	
♦SIEG	SPE	
THEF	UPI	
	WAB	
1N5245	Δ♦MOTA	195 - 15
♦APD	CDIL	
CEN	CODI	
CRI	FGRS	
FSC	HITJ	
HTN	IDC	
♦ITTG	KSI	
♦MSC	NJS	
RHM	SIEG	
SPE	SPR	
	UPI	
1N5245A	Δ♦MOTA	195 - 4
♦APD	CEN	
CODI	CRI	
FGRS	FSC	
HITJ	HTN	
IDC	ITTG	
KSI	MSC	
NJS	RHM	
SPE	UPI	
1N5245B	Δ♦MOTA	194 -177
♦ALGG	♦APD	
CEN	CODI	
CRI	FGRS	
♦FSC	HITJ	
HTN	IDC	
INC	ITTG	
KSI	MSC	
NECE	NJS	
RHM	♦SIEG	
SPE	THEF	
UPI	WAB	

Δ-Registered with JEDEC by this manufacturer

♦-Mfr's data sheet available in microfilm service

1. TYPE No. CROSS INDEX

IN TYPE NUMBER SEQUENCE

TYPE No.	MFRS	Pg&Line
1N5246	Δ♦MOTA	196 -118
	♦APD	
	CDIL	
	CEN	
	CODI	
	CRI	
	FGRS	
	HITJ	
	HTN	
	IDC	
	♦ITTG	
	KSI	
	♦MSC	
	NJS	
	RHM	
	SIEG	
	SPE	
	SPR	
	UPI	
1N5246A	Δ♦MOTA	196 -109
	♦APD	
	CEN	
	CODI	
	CRI	
	FGRS	
	HITJ	
	HTN	
	IDC	
	ITTG	
	KSI	
	MSC	
	NJS	
	RHM	
	SPE	
	UPI	
1N5246B	Δ♦MOTA	196 - 84
	♦ALGG	♦APD
	CEN	
	CODI	
	CRI	
	FGRS	
	HITJ	
	HTN	
	IDC	
	INC	
	ITTG	
	KSI	
	MSC	
	NECE	
	NJS	
	RHM	
	♦SIEG	
	THEF	
	UPI	
	WAB	
1N5247	Δ♦MOTA	197 -123
	♦APD	
	CDIL	
	CEN	
	CODI	
	CRI	
	FGRS	
	HITJ	
	HTN	
	IDC	
	♦ITTG	
	KSI	
	♦MSC	
	NJS	
	RHM	
	SIEG	
	SPR	
	UPI	
1N5247A	Δ♦MOTA	197 -116
	♦APD	
	CEN	
	CODI	
	CRI	
	FGRS	
	HITJ	
	HTN	
	IDC	
	ITTG	
	KSI	
	MSC	
	NJS	
	RHM	
	UPI	
1N5247B	Δ♦MOTA	197 -110
	♦ALGG	♦APD
	CEN	
	CODI	
	CRI	
	FGRS	
	HITJ	
	HTN	
	IDC	
	INC	
	ITTG	
	KSI	
	MSC	
	NECE	
	NJS	
	RHM	
	♦SIEG	
	SPE	
	THEF	
	UPI	
1N5248	Δ♦MOTA	198 -127
	♦APD	
	CDIL	
	CEN	
	CODI	
	CRI	
	FGRS	
	HITJ	
	HTN	
	IDC	
	♦ITTG	
	KSI	
	♦MSC	
	NJS	
	RHM	
	SIEG	
	SPE	
	SPR	
	SSY	
	UPI	
	WAB	
1N5248A	Δ♦MOTA	198 -118
	♦APD	
	CEN	
	CODI	
	CRI	
	FGRS	
	HITJ	
	HTN	
	IDC	
	ITTG	
	KSI	
	MSC	
	NJS	
	RHM	
	SPE	
	UPI	
1N5248B	Δ♦MOTA	198 - 89
	♦ALGG	♦APD
	CEN	
	CODI	
	CRI	
	FGRS	
	HITJ	
	HTN	
	IDC	
	INC	
	ITTG	
	KSI	
	MSC	
	NECE	
	NJS	
	RHM	
	♦SIEG	
	SPE	
	THEF	
	UPI	
	WAB	
1N5249	Δ♦MOTA	199 -135
	♦APD	
	CDIL	
	CEN	
	CODI	
	CRI	
	FGRS	
	HITJ	
	HTN	
	IDC	
	♦ITTG	
	KSI	
	♦MSC	
	NJS	
	RHM	
	SIEG	
	SPR	
	UPI	
1N5249A	Δ♦MOTA	199 -130
	♦APD	
	CEN	
	CODI	
	CRI	
	FGRS	
	HITJ	
	HTN	
	IDC	
	ITTG	
	KSI	
	MSC	
	NJS	
	RHM	
	UPI	
1N5249B	Δ♦MOTA	199 -126
	♦ALGG	♦APD
	CEN	
	CODI	
	CRI	
	FGRS	
cont.next col.		

TYPE No.	MFRS	Pg&Line
1N5249B		
(cont.)		
	HITJ	
	HTN	
	IDC	
	INC	
	ITTG	
	KSI	
	MSC	
	NECE	
	NJS	
	RHM	
	♦SIEG	
	THEF	
	UPI	
	WAB	
1N5250	Δ♦MOTA	200 -124
	♦APD	
	CDIL	
	CEN	
	CODI	
	CRI	
	FGRS	
	HITJ	
	HTN	
	IDC	
	♦ITTG	
	KSI	
	♦MSC	
	NJS	
	RHM	
	SIEG	
	SPE	
	SPR	
	UPI	
1N5250A	Δ♦MOTA	200 -115
	♦APD	
	CEN	
	CODI	
	CRI	
	FGRS	
	HITJ	
	HTN	
	IDC	
	ITTG	
	KSI	
	MSC	
	NJS	
	RHM	
	♦UNI	
	UPI	
1N5250B	Δ♦MOTA	200 - 84
	♦ALGG	♦APD
	CEN	
	CODI	
	CRI	
	FGRS	
	HITJ	
	HTN	
	IDC	
	INC	
	ITTG	
	KSI	
	MSC	
	NECE	
	NJS	
	RHM	
	♦SIEG	
	SPE	
	THEF	
	UPI	
	WAB	
1N5251	Δ♦MOTA	202 - 19
	♦APD	
	CDIL	
	CEN	
	CRI	
	FGRS	
	HITJ	
	HTN	
	IDC	
	♦ITTG	
	KSI	
	♦MSC	
	NJS	
	RHM	
	SIEG	
	SPR	
	UPI	
1N5251A	Δ♦MOTA	202 - 11
	♦APD	
	CEN	
	CRI	
	FGRS	
	HITJ	
	HTN	
	IDC	
	ITTG	
	KSI	
	MSC	
	NJS	
	RHM	
	SPE	
	UPI	
1N5251B	Δ♦MOTA	201 -194
	♦ALGG	♦APD
	CEN	
	CRI	
	FGRS	
	HITJ	
	HTN	
	IDC	
	INC	
	ITTG	
	KSI	
	MSC	
	NECE	
	NJS	
	RHM	
	♦SIEG	
	SPE	
	THEF	
	UPI	
1N5252	Δ♦MOTA	203 -123
	♦APD	
	CDIL	
	CEN	
	CRI	
	FGRS	
	HITJ	
	HTN	
	IDC	
	♦ITTG	
	KSI	
	♦MSC	
	NJS	
	RHM	
	SIEG	
	SPE	
	SPR	
	UPI	
1N5252A	Δ♦MOTA	203 -115
	♦APD	
	CEN	
	CRI	
	FGRS	
	HITJ	
	HTN	
	IDC	
	ITTG	
	KSI	
	MSC	
	NJS	
	RHM	
	SPE	
	UPI	
1N5252B	Δ♦MOTA	203 - 91
	♦ALGG	♦APD
	CEN	
	CRI	
	FGRS	
	HITJ	
	HTN	
	IDC	
	INC	
	ITTG	
	KSI	
	MSC	
	NECE	
	NJS	
	RHM	
	♦SIEG	
	SPE	
	THEF	
	UPI	
	WAB	
1N5253	Δ♦MOTA	204 -114
	♦APD	
	CDIL	
	CEN	
	CRI	
	FGRS	
	HITJ	
	HTN	
	IDC	
	♦ITTG	
	KSI	
	♦MSC	
	NJS	
	RHM	
	SIEG	
	SPE	
	SPR	
	UPI	
1N5253A	Δ♦MOTA	204 -109
	♦APD	
	CEN	
	CRI	
	FGRS	
	HITJ	
	HTN	
	IDC	
	ITTG	
	KSI	
	MSC	
cont.next col.		

TYPE No.	MFRS	Pg&Line
1N5253A		
(cont.)		
	NJS	
	RHM	
	SPE	
	UPI	
1N5253B	Δ♦MOTA	204 -105
	♦ALGG	♦APD
	CEN	
	CRI	
	FGRS	
	HITJ	
	HTN	
	IDC	
	INC	
	ITTG	
	KSI	
	MSC	
	NECE	
	NJS	
	RHM	
	♦SIEG	
	SPE	
	THEF	
	UPI	
1N5254	Δ♦MOTA	205 - 57
	♦APD	
	CDIL	
	CEN	
	CRI	
	FGRS	
	FSC	
	HITJ	
	HTN	
	IDC	
	♦ITTG	
	KSI	
	♦MSC	
	NJS	
	RHM	
	SIEG	
	SPE	
	SPR	
	UPI	
	WAB	
1N5254A	Δ♦MOTA	205 - 49
	♦APD	
	CEN	
	CRI	
	FSC	
	HITJ	
	HTN	
	IDC	
	ITTG	
	KSI	
	MSC	
	NJS	
	RHM	
	SPE	
	UPI	
1N5254B	Δ♦MOTA	205 - 25
	♦ALGG	♦APD
	CEN	
	CRI	
	FGRS	
	FSC	
	HITJ	
	HTN	
	IDC	
	INC	
	ITTG	
	KSI	
	MSC	
	NECE	
	NJS	
	RHM	
	♦SIEG	
	THEF	
	UPI	
1N5255	Δ♦MOTA	206 - 49
	♦APD	
	CDIL	
	CEN	
	CRI	
	FGRS	
	HITJ	
	HTN	
	IDC	
	♦ITTG	
	KSI	
	♦MSC	
	NJS	
	RHM	
	SIEG	
	SPR	
	UPI	
1N5255A	Δ♦MOTA	206 - 44
	♦APD	
	CEN	
	CRI	
	FGRS	
	HITJ	
	HTN	
	IDC	
	ITTG	
	KSI	
	MSC	
	NJS	
	RHM	
	UPI	
1N5255B	Δ♦MOTA	206 - 40
	♦ALGG	♦APD
	CEN	
	CRI	
	FGRS	
	HITJ	
	HTN	
	IDC	
	INC	
	ITTG	
	KSI	
	MSC	
	NECE	
	NJS	
	RHM	
	♦SIEG	
	SPE	
	THEF	
	UPI	
1N5256	Δ♦MOTA	206 -193
	♦APD	
	CDIL	
	CEN	
	CRI	
	FGRS	
	HITJ	
	HTN	
	IDC	
	♦ITTG	
	KSI	
	♦MSC	
	NJS	
	RHM	
	SIEG	
	SPR	
	UPI	
1N5256A	Δ♦MOTA	206 -184
	♦APD	
	CEN	
	CRI	
	FGRS	
	HITJ	
	HTN	
	IDC	
	ITTG	
	KSI	
	MSC	
	NJS	
	RHM	
	UPI	
1N5256B	Δ♦MOTA	206 -161
	♦ALGG	♦APD
	CEN	
	CRI	
	FGRS	
	HITJ	
	HTN	
	IDC	
	INC	
	ITTG	
	KSI	
	MSC	
	NECE	
	NJS	
	RHM	
	♦SIEG	
	SPE	
	THEF	
	UPI	
1N5257	♦APD	208 - 81
	CDIL	
	CEN	
	CRI	
	FGRS	
	HITJ	
	HTN	
	IDC	
	♦ITTG	
	KSI	
	♦MOTA	
	♦MSC	
	NJS	
	RHM	
	SIEG	
	SPE	
	SPR	
	UPI	
1N5257A	Δ♦MOTA	208 - 73
	♦APD	
	CEN	
cont.next col.		

TYPE No.	MFRS	Pg&Line
1N5257A		
(cont.)		
	CRI	
	FGRS	
	HITJ	
	HTN	
	IDC	
	ITTG	
	KSI	
	MSC	
	NJS	
	RHM	
	UPI	
1N5257B	Δ♦MOTA	208 - 49
	♦ALGG	♦APD
	CEN	
	CRI	
	FGRS	
	HITJ	
	HTN	
	IDC	
	INC	
	ITTG	
	KSI	
	MSC	
	NECE	
	NJS	
	RHM	
	♦SIEG	
	SPE	
	THEF	
	UPI	
	WAB	
1N5258	Δ♦MOTA	209 -152
	♦APD	
	CDIL	
	CEN	
	CRI	
	HITJ	
	HTN	
	IDC	
	♦MSC	
	NJS	
	RHM	
	SIEG	
	SPE	
	SPR	
	UPI	
1N5258A	Δ♦MOTA	209 -144
	♦APD	
	CEN	
	CRI	
	HITJ	
	HTN	
	IDC	
	MSC	
	NJS	
	RHM	
	UPI	
1N5258B	Δ♦MOTA	209 -126
	♦ALGG	♦APD
	CEN	
	CRI	
	HITJ	
	HTN	
	IDC	
	MSC	
	NECE	
	NJS	
	RHM	
	♦SIEG	
	SPE	
	SSY	
	THEF	
	UPI	
1N5259	Δ♦MOTA	210 -189
	♦APD	
	CEN	
	CRI	
	HTN	
	IDC	
	♦MSC	
	NJS	
	RHM	
	SIEG	
	SPR	
	UPI	
1N5259A	Δ♦MOTA	210 -182
	♦APD	
	CEN	
	CRI	
	HTN	
	IDC	
	MSC	
	NJS	
	RHM	
	UPI	
1N5259B	Δ♦MOTA	210 -162
	♦ALGG	♦APD
	CEN	
	CRI	
	HTN	
	IDC	
	MSC	
	NECE	
	NJS	
	RHM	
	♦SIEG	
	SPE	
	THEF	
	UPI	
1N5260	Δ♦MOTA	212 - 2
	♦APD	
	CEN	
	CRI	
	HTN	
	IDC	
	♦MSC	
	NJS	
	RHM	
	♦SIEG	
	SPR	
	UPI	
1N5260A	Δ♦MOTA	211 -198
	♦APD	
	CEN	
	CRI	
	HTN	
	IDC	
	MSC	
	NJS	
	RHM	
	UPI	
1N5260B	Δ♦MOTA	211 -180
	♦ALGG	♦APD
	CEN	
	CRI	
	HTN	
	IDC	
	MSC	
	NECE	
	NJS	
	RHM	
	♦SIEG	
	SPE	
	THEF	
	UPI	
1N5261	Δ♦MOTA	213 - 16
	♦APD	
	CEN	
	CRI	
	HTN	
	IDC	
	♦MSC	
	NJS	
	RHM	
	SIEG	
	SPR	
	STR	
	UPI	
1N5261A	Δ♦MOTA	213 - 9
	♦APD	
	CEN	
	CRI	
	HTN	
	IDC	
	MSC	
	NJS	
	RHM	
	STR	
	UPI	
1N5261B	Δ♦MOTA	212 -192
	♦ALGG	♦APD
	CEN	
	CRI	
	HTN	
	IDC	
	MSC	
	NECE	
	NJS	
	RHM	
	♦SIEG	
	STR	
	THEF	
	UPI	
1N5262	Δ♦MOTA	214 - 19
	♦APD	
	CEN	
	CRI	
	HTN	
	IDC	
	♦MSC	
	NJS	
	RHM	
	♦SIEG	
	SPR	
	UPI	
1N5262A	Δ♦MOTA	214 - 13
	♦APD	
	CEN	
cont.next col.		

TYPE No.	MFRS	Pg&Line
1N5262A		
(cont.)		
	CRI	
	HTN	
	IDC	
	MSC	
	NJS	
	RHM	
	UPI	
1N5262B	Δ♦MOTA	213 -202
	♦ALGG	♦APD
	CEN	
	CRI	
	HTN	
	IDC	
	MSC	
	NECE	
	NJS	
	RHM	
	♦SIEG	
	SPE	
	THEF	
	UPI	
1N5263	Δ♦MOTA	215 - 4
	♦APD	
	CEN	
	CRI	
	HTN	
	IDC	
	♦MSC	
	NJS	
	RHM	
	SCN	
	SPR	
	UPI	
1N5263A	Δ♦MOTA	214 -197
	♦APD	
	CEN	
	CRI	
	HTN	
	IDC	
	MSC	
	NJS	
	RHM	
	UPI	
1N5263B	Δ♦MOTA	214 -185
	♦ALGG	♦APD
	CEN	
	CRI	
	HTN	
	IDC	
	MSC	
	NECE	
	NJS	
	RHM	
	♦SIEG	
	SPE	
	THEF	
	UPI	
1N5264	Δ♦MOTA	215 -149
	♦APD	
	CEN	
	CRI	
	HTN	
	IDC	
	♦MSC	
	NJS	
	RHM	
	SIEG	
	SPR	
	UPI	
1N5264A	Δ♦MOTA	215 -146
	♦APD	
	CEN	
	CRI	
	HTN	
	IDC	
	MSC	
	NJS	
	RHM	
	SPE	
	UPI	
1N5264B	Δ♦MOTA	215 -144
	♦ALGG	♦APD
	CEN	
	CRI	
	HTN	
	IDC	
	MSC	
	NECE	
	NJS	
	RHM	
	♦SIEG	
	THEF	
	UPI	
1N5265	Δ♦MOTA	216 - 11
	♦APD	
	CEN	
	CRI	
	HTN	
	IDC	
	♦MSC	
	NJS	
	RHM	
	UPI	
1N5265A	Δ♦MOTA	216 - 4
	♦APD	
	CEN	
	CRI	
	HTN	
	IDC	
	MSC	
	NJS	
	RHM	
	UPI	
1N5265B	Δ♦MOTA	215 -195
	♦ALGG	♦APD
	CEN	
	CRI	
	HTN	
	IDC	
	MSC	
	NECE	
	NJS	
	RHM	
	♦SIEG	
	THEF	
	UPI	
	WAB	
1N5266	Δ♦MOTA	216 -186
	♦APD	
	CEN	
	CRI	
	HTN	
	IDC	
	♦MSC	
	NJS	
	RHM	
	♦SIEG	
	UPI	
1N5266A	Δ♦MOTA	216 -180
	♦APD	
	CEN	
	CRI	
	HTN	
	IDC	
	MSC	
	NJS	
	RHM	
	UPI	
1N5266B	Δ♦MOTA	216 -168
	♦ALGG	♦APD
	CEN	
	CRI	
	HTN	
	IDC	
	MSC	
	NECE	
	NJS	
	RHM	
	♦SIEG	
	SPE	
	THEF	
	UPI	
1N5267	Δ♦MOTA	217 -173
	CEN	
	CRI	
	HTN	
	IDC	
	♦MSC	
	NJS	
	RHM	
	SIEG	
	SPE	
	UPI	
1N5267A	Δ♦MOTA	217 -167
	CEN	
	CRI	
	HTN	
	IDC	
	MSC	
	NJS	
	RHM	
	UPI	
1N5267B	Δ♦MOTA	217 -156
	♦ALGG	CEN
	CEN	
	CRI	
	HTN	
	IDC	
	MSC	
	NECE	
	NJS	
	RHM	
	♦SIEG	
	THEF	
	UPI	

Δ-Registered with JEDEC by this manufacturer

♦-Mfr's data sheet available in microfilm service

1. TYPE No. CROSS INDEX

IN TYPE NUMBER SEQUENCE

TYPE No.	MFRS	Pg&Line
1N5268	Δ♦MOTA	218 -154
	CEN	
	HTN	
	♦MSC	
	RHM	
	SPE	
1N5268A	Δ♦MOTA	218 -147
	CEN	
	HTN	
	MSC	
	RHM	
1N5268B	Δ♦MOTA	218 -138
	♦ALGG	
	CRI	
	IDC	
	NECE	
	RHM	
	THEF	
1N5269	Δ♦MOTA	219 - 83
	CEN	
	HTN	
	♦MSC	
	RHM	
1N5269A	Δ♦MOTA	219 - 80
	CEN	
	HTN	
	MSC	
	RHM	
1N5269B	Δ♦MOTA	219 - 78
	♦ALGG	
	CRI	
	IDC	
	NECE	
	RHM	
	THEF	
1N5270	Δ♦MOTA	219 -137
	CEN	
	HTN	
	♦MSC	
	RHM	
	SPE	
1N5270A	Δ♦MOTA	219 -131
	CEN	
	HTN	
	MSC	
	RHM	
1N5270B	Δ♦MOTA	219 -124
	♦ALGG	
	CRI	
	IDC	
	NECE	
	RHM	
	THEF	
1N5271	Δ♦MOTA	220 - 94
	CEN	
	HTN	
	♦MSC	
	RHM	
	SPE	
1N5271A	Δ♦MOTA	220 - 89
	CEN	
	HTN	
	MSC	
	RHM	
1N5271B	Δ♦MOTA	220 - 81
	CEN	
	HTN	
	MSC	
	RHM	
	SPE	
1N5272	Δ♦MOTA	221 - 60
	CEN	
	HTN	
	♦MSC	
	RHM	
1N5272A	Δ♦MOTA	221 - 56
	CEN	
	HTN	
	MSC	
	RHM	
1N5272B	Δ♦MOTA	221 - 50
	CEN	
	HTN	
	MSC	
	♦SIEG	
	THEF	
1N5273	Δ♦MOTA	222 - 11
	CEN	
	HTN	
	♦MSC	
	SIEG	
1N5273A	Δ♦MOTA	222 - 6
	CEN	
	HTN	
	MSC	
	SPE	
1N5273B	Δ♦MOTA	221 -192
	CEN	
	HTN	
	MSC	
	THEF	
1N5274	Δ♦MOTA	222 -155
	CEN	
	HTN	
	♦MSC	
	SIEG	
1N5274A	Δ♦MOTA	222 -150
	CEN	
	HTN	
	MSC	
1N5274B	Δ♦MOTA	222 -145
	CEN	
	HTN	
	MSC	
	THEF	
1N5275	Δ♦MOTA	223 - 92
	CEN	
	HTN	
	♦MSC	
	SIEG	
	UPI	
1N5275A	Δ♦MOTA	223 - 88
	CEN	
	HTN	
	MSC	
1N5275B	Δ♦MOTA	223 - 85
	CEN	
	HTN	
	MSC	
	SPE	
1N5276	Δ♦MOTA	223 -182
	CEN	
	HTN	
	♦MSC	
	SIEG	
1N5276A	Δ♦MOTA	223 -176
	CEN	
	HTN	
	MSC	
	SPE	
1N5276B	Δ♦MOTA	223 -177
	CEN	
	HTN	
	MSC	
	THEF	
1N5277	Δ♦MOTA	224 -133
	CEN	
	HTN	
	♦MSC	
	SIEG	
1N5277A	Δ♦MOTA	224 -128
	CEN	
	HTN	
	MSC	
1N5277B	Δ♦MOTA	224 -123
	CEN	
	HTN	
	MSC	
	THEF	
1N5278	Δ♦MOTA	225 - 60
	CEN	
	HTN	
	♦MSC	
	SIEG	
1N5278A	Δ♦MOTA	225 - 56
	CEN	
	HTN	
	MSC	
1N5278B	Δ♦MOTA	225 - 53
	CEN	
	HTN	
	MSC	
	THEF	
1N5279	Δ♦MOTA	225 -138
	CEN	
	HTN	
	♦MSC	
	SIEG	
1N5279A	Δ♦MOTA	225 -133
	CEN	
	HTN	
	MSC	
1N5279B	ΔMOTA	225 -127
	CEN	
	HTN	
	MSC	
	THEF	
1N5280	Δ♦MOTA	226 - 79
	CEN	
	HTN	
	♦MSC	
	SIEG	
1N5280A	Δ♦MOTA	226 - 76
	CEN	
	HTN	
	MSC	
1N5280B	Δ♦MOTA	226 - 74
	CEN	
	HTN	
	MSC	
	THEF	
1N5281	Δ♦MOTA	226 -142
	CEN	
	HTN	
	♦MSC	
	♦SIEG	
1N5281A	Δ♦MOTA	226 -137
	CEN	
cont.next col.		
1N5281A (cont.)	HTN	
	IDC	
	MSC	
	NJS	
	UPI	
1N5281B	Δ♦MOTA	226 -132
	CEN	
	HTN	
	MSC	
	SPE	
1N5282	Δ♦FSC	246 -181
	♦APD	
	IDC	
	SPE	
1N5283	Δ♦MOTA	434 - 12
	KSI	
	SOD	
1N5284	Δ♦MOTA	434 - 13
	KSI	
	♦SOD	
1N5285	Δ♦MOTA	434 - 14
	KSI	
	SOD	
1N5286	Δ♦MOTA	434 - 15
	KSI	
	SOD	
1N5287	Δ♦MOTA	434 - 16
	KSI	
	SOD	
1N5288	Δ♦MOTA	434 - 17
	KSI	
	SOD	
1N5289	Δ♦MOTA	434 - 18
	KSI	
	SOD	
1N5290	Δ♦MOTA	434 - 19
	KSI	
	SOD	
1N5291	Δ♦MOTA	434 - 20
	KSI	
	SOD	
1N5292	Δ♦MOTA	434 - 21
	KSI	
	SOD	
1N5293	Δ♦MOTA	434 - 22
	KSI	
	SOD	
1N5294	Δ♦MOTA	434 - 23
	KSI	
	SOD	
1N5295	Δ♦MOTA	434 - 24
	KSI	
	SOD	
1N5296	Δ♦MOTA	434 - 25
	KSI	
	SOD	
1N5297	Δ♦MOTA	434 - 26
	KSI	
	SOD	
1N5298	Δ♦MOTA	434 - 27
	KSI	
	SOD	
1N5299	Δ♦MOTA	434 - 28
	KSI	
	SOD	
1N5300	Δ♦MOTA	434 - 29
	KSI	
	SOD	
1N5301	Δ♦MOTA	434 - 30
	KSI	
	SOD	
1N5302	Δ♦MOTA	434 - 31
	KSI	
	SOD	
1N5303	Δ♦MOTA	434 - 32
	KSI	
	SOD	
1N5304	Δ♦MOTA	434 - 33
	KSI	
	SOD	
1N5305	Δ♦MOTA	434 - 34
	KSI	
	SOD	
1N5306	Δ♦MOTA	434 - 35
	KSI	
	SOD	
1N5307	Δ♦MOTA	434 - 36
	KSI	
	SOD	
1N5308	Δ♦MOTA	434 - 37
	KSI	
	SOD	
1N5309	Δ♦MOTA	434 - 38
	KSI	
	SOD	
1N5310	Δ♦MOTA	434 - 39
	KSI	
	SOD	
1N5311	Δ♦MOTA	434 - 40
	KSI	
	SOD	
1N5312	Δ♦MOTA	434 - 41
	KSI	
	SOD	
1N5313	Δ♦MOTA	434 - 42
	KSI	
	SOD	
1N5314	Δ♦MOTA	434 - 43
	KSI	
	SOD	
	♦TCY	
1N5315	♦MSC	247 - 15
1N5316	♦MSC	247 - 16
1N5317	♦APD	246 -182
	♦MSC	
1N5318	♦MSC	246 -114
	STI	
1N5319	♦MSC	245 - 78
	SPE	
1N5320	ΔUNI	247 - 96
	SPE	
1N5324	EDI	429 - 17
	SCN	
1N5326	ΔTRWS	295 - 21
	UPI	
1N5330	UNI	411 - 51
1N5331	CEN	256 - 96
	♦COO	
	♦DIT	
	♦NAT	
	SPE	
	SST	
1N5332	CEN	407 - 20
	♦COO	
	♦DIT	
	IDI	
	SCN	
	SSI	
1N5333	CEN	377 - 52
	♦DIT	
	HTN	
	NJS	
	SIEG	
	SST	
1N5333A	Δ♦MOTA	377 - 50
	CEN	
	♦DIT	
	HTN	
	NJS	
	SPE	
1N5333B	Δ♦MOTA	377 - 45
	CEN	
	♦GSE	
	♦MSC	
	SCN	
	SPE	
	♦THEF	
1N5334	CEN	377 - 74
	CRI	
	♦GSE	
	MSC	
	SCN	
	SPE	
1N5334A	Δ♦MOTA	377 - 72
	CEN	
	♦DIT	
	HTN	
	NJS	
1N5334B	Δ♦MOTA	377 - 66
	CEN	
	♦GSE	
	♦MSC	
	SCN	
	SPE	
1N5335	CEN	377 - 97
	CRI	
	♦GSE	
	MSC	
	SCN	
	SPE	
1N5335A	Δ♦MOTA	377 - 95
	CEN	
	♦DIT	
	HTN	
	NJS	
	SPE	
1N5335B	Δ♦MOTA	377 - 91
	CEN	
	♦GSE	
	♦MSC	
	SCN	
	SPE	
	♦THEF	
1N5336	CEN	377 -137
	CRI	
	♦GSE	
	MSC	
	SCN	
1N5336A	Δ♦MOTA	377 -135
	CEN	
	♦DIT	
	HTN	
	NJS	
1N5336B	Δ♦MOTA	377 -130
	CEN	
	♦GSE	
	♦MSC	
	SCN	
	SPE	
1N5337	CEN	378 - 16
	CRI	
	♦GSE	
	MSC	
	SCN	
1N5337A	Δ♦MOTA	378 - 14
	CEN	
cont.next col.		
1N5337A (cont.)	♦DIT	
	♦GSE	
	MSC	
	SCN	
1N5337B	Δ♦MOTA	378 - 9
	CEN	
	♦GSE	
	♦MSC	
	SCN	
	♦THEF	
1N5338	CEN	378 - 63
	CRI	
	♦GSE	
	MSC	
	SCN	
	SPE	
1N5338A	Δ♦MOTA	378 - 61
	CEN	
	♦DIT	
	HTN	
	NJS	
	SPE	
1N5338B	Δ♦MOTA	378 - 56
	CEN	
	♦GSE	
	♦MSC	
	SCN	
	SPE	
	♦THEF	
1N5339	CEN	378 -103
	CRI	
	♦GSE	
	MSC	
	SCN	
	SPE	
1N5339A	Δ♦MOTA	378 -101
	CEN	
	♦DIT	
	HTN	
	NJS	
1N5339B	Δ♦MOTA	378 - 96
	CEN	
	♦GSE	
	♦MSC	
	SPE	
	♦THEF	
1N5340	CEN	378 -147
	CRI	
	♦GSE	
	MSC	
	SCN	
	SPE	
1N5340A	Δ♦MOTA	378 -146
	CEN	
	♦DIT	
	HTN	
	NJS	
	SPE	
1N5340B	Δ♦MOTA	378 -145
	CEN	
	♦GSE	
	♦MSC	
	SCN	
	SPE	
	♦THEF	
1N5341	CEN	378 -158
	CRI	
	♦GSE	
	MSC	
	SCN	
	SPE	
1N5341A	Δ♦MOTA	378 -156
	CEN	
	♦DIT	
	HTN	
	NJS	
	SST	
1N5341B	Δ♦MOTA	378 -151
	CEN	
	♦GSE	
	♦MSC	
	SCN	
	SPE	
	♦THEF	
1N5342	CEN	379 - 31
	CRI	
	♦GSE	
	MSC	
	SCN	
	SPE	
1N5342A	Δ♦MOTA	379 - 24
	CEN	
	♦DIT	
	HTN	
	MSC	
	SCN	
1N5342B	Δ♦MOTA	379 - 11
	CEN	
	♦GSE	
	♦MSC	
	SCN	
	SPE	
	♦THEF	

Δ-Registered with JEDEC by this manufacturer

♦-Mfr's data sheet available in microfilm service

1. TYPE No. CROSS INDEX

IN TYPE NUMBER SEQUENCE

TYPE No.	MFRS	Pg&Line
1N5343	CEN	379 -145
	♦DIT	
	FGRS	
	♦GSE	
	HTN	
	IDC	
	MSC	
	NJS	
	SCN	
	SIEG	
	SPE	
	SST	
	WAB	
1N5343A	Δ♦MOTA	379 -137
	CEN	
	♦DIT	
	FGRS	
	♦GSE	
	HTN	
	IDC	
	MAL	
	MSC	
	NJS	
	SCN	
	SST	
	WAB	
1N5343B	Δ♦MOTA	379 -123
	CEN	
	FGRS	
	♦GSE	
	HTN	
	IDC	
	♦MSC	
	NJS	
	SCN	
	♦SIEG	
	SPE	
	SST	
	♦THEF	
	WAB	
1N5344	CEN	380 - 68
	CRI	
	♦DIT	
	FGRS	
	♦GSE	
	HTN	
	MSC	
	NJS	
	SCN	
	SIEG	
	SST	
	WAB	
1N5344A	Δ♦MOTA	380 - 59
	CEN	
	CRI	
	♦DIT	
	FGRS	
	♦GSE	
	HTN	
	MAL	
	MSC	
	NJS	
	SCN	
	SPE	
	SST	
	WAB	
1N5344B	Δ♦MOTA	380 - 44
	CEN	
	CRI	
	FGRS	
	♦GSE	
	HTN	
	♦MSC	
	NJS	
	SCN	
	♦SIEG	
	SPE	
	SST	
	♦THEF	
	UPI	
	WAB	
1N5345	CEN	380 -144
	CRI	
	♦DIT	
	FGRS	
	♦GSE	
	HTN	
	IDC	
	MSC	
	NJS	
	SCN	
	SIEG	
	SPE	
	SST	
	WAB	
1N5345A	Δ♦MOTA	380 -143
	CEN	
	CRI	
	♦DIT	
	FGRS	
	♦GSE	
	HTN	
	IDC	
	MSC	
	NJS	
	SCN	
	SST	
	WAB	
1N5345B	Δ♦MOTA	380 -141
	CEN	
	CRI	
	FGRS	
	♦GSE	
	HTN	
	♦MSC	
	NJS	
	SCN	
	♦SIEG	
	SPE	
	SST	
	♦THEF	
	WAB	
1N5346	FGRS	380 -166
1N5346A	CEN	380 -187
	CRI	
	FGRS	
	♦GSE	
	HTN	
	IDC	
	MAL	
	MSC	
	NJS	
	SCN	
	SST	
	WAB	
1N5347	FGRS	381 - 65
1N5348	FGRS	381 -178
1N5349	FGRS	382 - 72
1N5349A	CEN	382 - 94
	CRI	
	FGRS	
	♦GSE	
	HTN	
	IDC	
	MAL	
	MSC	
	NJS	
	SCN	
	SPE	
	SST	
	WAB	
1N5350	CEN	383 - 18
	CRI	
	FGRS	
	♦GSE	
	HTN	
	IDC	
	MSC	
	NJS	
	SCN	
	SIEG	
	SPE	
	SST	
	WAB	
1N5350A	Δ♦MOTA	383 - 10
	CEN	
	CRI	
	FGRS	
	♦GSE	
	HTN	
	IDC	
	MSC	
	NJS	
	SCN	
	SST	
	WAB	
1N5350B	Δ♦MOTA	382 -195
	CEN	
	CRI	
	FGRS	
	♦GSE	
	HTN	
	IDC	
	♦MSC	
	NJS	
	SCN	
	♦SIEG	
	SPE	
	SST	
	♦THEF	
	WAB	
1N5351	CEN	383 -109
	CRI	
	FGRS	
	♦GSE	
	HTN	
	IDC	
	MSC	
	NJS	
	SCN	
cont.next col.		

TYPE No.	MFRS	Pg&Line
1N5351		
(cont.)	SIEG	
	SPE	
	SST	
	WAB	
1N5351A	Δ♦MOTA	383 -104
	CEN	
	CRI	
	FGRS	
	♦GSE	
	HTN	
	IDC	
	MSC	
	NJS	
	SCN	
	SPE	
	SST	
	WAB	
1N5351B	Δ♦MOTA	383 - 95
	CEN	
	CRI	
	FGRS	
	♦GSE	
	HTN	
	IDC	
	♦MSC	
	NJS	
	SCN	
	♦SIEG	
	SPE	
	SST	
	♦THEF	
	WAB	
1N5352	CEN	383 -183
	CRI	
	FGRS	
	♦GSE	
	HTN	
	IDC	
	MSC	
	NJS	
	SCN	
	SIEG	
	SPE	
	SST	
	UPI	
	WAB	
1N5352A	ΔMOTA	383 -174
	CEN	
	CRI	
	FGRS	
	♦GSE	
	HTN	
	IDC	
	MAL	
	MSC	
	NJS	
	SCN	
	SPE	
	SST	
	UPI	
	WAB	
1N5352B	Δ♦MOTA	383 -159
	CEN	
	CRI	
	FGRS	
	♦GSE	
	HTN	
	IDC	
	♦MSC	
	NJS	
	SCN	
	♦SIEG	
	SPE	
	SST	
	♦THEF	
	UPI	
	WAB	
1N5353	CEN	384 - 91
	CRI	
	FGRS	
	♦GSE	
	HTN	
	IDC	
	MSC	
	NJS	
	SCN	
	SIEG	
	SST	
	WAB	
1N5353A	Δ♦MOTA	384 - 83
	CEN	
	CRI	
	FGRS	
	♦GSE	
	HTN	
	IDC	
	MSC	
	NJS	
	SCN	
	SPE	
	SST	
	WAB	
1N5353B	Δ♦MOTA	384 - 73
	CEN	
	CRI	
	FGRS	
	♦GSE	
	HTN	
	IDC	
	♦MSC	
	NJS	
	SCN	
	♦SIEG	
	SPE	
	SST	
	♦THEF	
	WAB	
1N5354	CEN	384 -178
	CRI	
	FGRS	
	♦GSE	
	HTN	
	IDC	
	MSC	
	NJS	
	SCN	
	SIEG	
	SPE	
	SST	
	WAB	
1N5354A	Δ♦MOTA	384 -176
	CEN	
	CRI	
	FGRS	
	♦GSE	
	HTN	
	IDC	
	MSC	
	NJS	
	SCN	
	SST	
	WAB	
1N5354B	Δ♦MOTA	384 -170
	CEN	
	CRI	
	FGRS	
	♦GSE	
	HTN	
	IDC	
	♦MSC	
	NJS	
	SCN	
	♦SIEG	
	SPE	
	SST	
	♦THEF	
	WAB	
1N5355	CEN	385 - 49
	CRI	
	FGRS	
	♦GSE	
	HTN	
	IDC	
	MSC	
	NJS	
	SCN	
	SIEG	
	SPE	
	SST	
	WAB	
1N5355A	CEN	385 - 40
	CRI	
	FGRS	
	♦GSE	
	HTN	
	IDC	
	MAL	
	MSC	
	NJS	
	SCN	
	SPE	
	SST	
	WAB	
1N5355B	Δ♦MOTA	385 - 25
	CEN	
	CRI	
	FGRS	
	♦GSE	
	HTN	
	IDC	
	♦MSC	
	NJS	
	SCN	
	♦SIEG	
	SPE	
	SST	
	♦THEF	
	WAB	
1N5356	CEN	385 -143
	CRI	
	FGRS	
	♦GSE	
	HTN	
cont.next col.		

TYPE No.	MFRS	Pg&Line
1N5356		
(cont.)	IDC	
	MSC	
	NJS	
	SCN	
	SIEG	
	SPE	
	SST	
	WAB	
1N5356A	Δ♦MOTA	385 -141
	CEN	
	CRI	
	FGRS	
	♦GSE	
	HTN	
	IDC	
	MSC	
	NJS	
	SCN	
	SST	
	WAB	
1N5356B	Δ♦MOTA	385 -135
	CEN	
	CRI	
	FGRS	
	♦GSE	
	HTN	
	IDC	
	♦MSC	
	NJS	
	SCN	
	♦SIEG	
	SPE	
	SST	
	♦THEF	
	WAB	
1N5357	CEN	386 - 2
	CRI	
	FGRS	
	♦GSE	
	HTN	
	IDC	
	MSC	
	NJS	
	SCN	
	SIEG	
	SPE	
	SST	
	WAB	
1N5357A	ΔMOTA	385 -194
	AMR	
	CEN	
	CRI	
	FGRS	
	♦GSE	
	HTN	
	IDC	
	MAL	
	MSC	
	NJS	
	SCN	
	SPE	
	SST	
	UPI	
	WAB	
1N5357B	Δ♦MOTA	385 -179
	AMR	
	CEN	
	CRI	
	FGRS	
	♦GSE	
	HTN	
	IDC	
	♦MSC	
	NJS	
	SCN	
	♦SIEG	
	SPE	
	SST	
	♦THEF	
	WAB	
1N5358	AMR	386 -107
	CEN	
	CRI	
	FGRS	
	♦GSE	
	HTN	
	IDC	
	MSC	
	NJS	
	SCN	
	SIEG	
	SPE	
	SST	
	WAB	
1N5358A	Δ♦MOTA	386 - 98
	AMR	
	CEN	
	CRI	
	FGRS	
	♦GSE	
	HTN	
	IDC	
	MSC	
	NJS	
	SCN	
	SST	
	WAB	
1N5358B	Δ♦MOTA	386 - 84
	AMR	
	CEN	
	CRI	
	FGRS	
	GSE	
	♦HTN	
	IDC	
	♦MSC	
	NJS	
	SCN	
	♦SIEG	
	SST	
	♦THEF	
	WAB	
1N5359	AMR	387 - 24
	CEN	
	CRI	
	FGRS	
	♦GSE	
	HTN	
	IDC	
	MSC	
	NJS	
	SCN	
	SIEG	
	SPE	
	SST	
	WAB	
1N5359A	Δ♦MOTA	387 - 15
	AMR	
	CEN	
	CRI	
	FGRS	
	♦GSE	
	HTN	
	IDC	
	MSC	
	NJS	
	SCN	
	SPE	
	SST	
	WAB	
1N5359B	Δ♦MOTA	386 -200
	AMR	
	CEN	
	CRI	
	FGRS	
	♦GSE	
	HTN	
	IDC	
	♦MSC	
	NJS	
	SCN	
	♦SIEG	
	SPE	
	SST	
	♦THEF	
	WAB	
1N5360	AMR	387 -110
	CEN	
	CRI	
	FGRS	
	♦GSE	
	HTN	
	IDC	
	MSC	
	NJS	
	SCN	
	SIEG	
	SPE	
	SST	
	UPI	
	WAB	
1N5360A	ΔMOTA	387 -108
	AMR	
	CEN	
	CRI	
	FGRS	
	♦GSE	
	HTN	
	IDC	
	MAL	
	MSC	
	NJS	
	SCN	
	SPE	
	SST	
	WAB	
1N5360B	Δ♦MOTA	387 -102
	AMR	
	CEN	
	CRI	
	FGRS	
cont.next col.		

TYPE No.	MFRS	Pg&Line
1N5360B		
(cont.)	♦GSE	
	HTN	
	IDC	
	♦MSC	
	NJS	
	SCN	
	♦SIEG	
	SPE	
	SST	
	♦THEF	
	WAB	
1N5361	AMR	387 -163
	CEN	
	CRI	
	FGRS	
	♦GSE	
	HTN	
	IDC	
	MSC	
	NJS	
	SCN	
	SIEG	
	SPE	
	SST	
	WAB	
1N5361A	Δ♦MOTA	387 -153
	AMR	
	CEN	
	CRI	
	FGRS	
	♦GSE	
	HTN	
	IDC	
	MSC	
	NJS	
	SCN	
	SPE	
	SST	
	WAB	
1N5361B	Δ♦MOTA	387 -138
	AMR	
	CEN	
	CRI	
	FGRS	
	♦GSE	
	HTN	
	IDC	
	♦MSC	
	NJS	
	SCN	
	♦SIEG	
	SPE	
	SST	
	♦THEF	
	WAB	
1N5362	AMR	388 - 43
	CEN	
	CRI	
	FGRS	
	♦GSE	
	HTN	
	MSC	
	NJS	
	SCN	
	SIEG	
	SPE	
	SST	
	WAB	
1N5362A	Δ♦MOTA	388 - 42
	AMR	
	CEN	
	CRI	
	FGRS	
	♦GSE	
	HTN	
	MSC	
	NJS	
	SCN	
	SPE	
	SST	
	WAB	
1N5362B	Δ♦MOTA	388 - 40
	AMR	
	CEN	
	CRI	
	FGRS	
	♦GSE	
	HTN	
	♦MSC	
	NJS	
	SCN	
	♦SIEG	
	SPE	
	SST	
	♦THEF	
	WAB	
1N5363	AMR	388 - 82
	CEN	
	CRI	
	FGRS	
	♦GSE	
	HTN	
	IDC	
	MSC	
	NJS	
	SCN	
	SIEG	
	SPE	
	SST	
	WAB	
1N5363A	ΔMOTA	388 - 73
	AMR	
	CEN	
	CRI	
	FGRS	
	♦GSE	
	HTN	
	IDC	
	MAL	
	MSC	
	NJS	
	SCN	
	SPE	
	SST	
	WAB	
1N5363B	Δ♦MOTA	388 - 58
	AMR	
	CEN	
	CRI	
	FGRS	
	♦GSE	
	HTN	
	IDC	
	♦MSC	
	NJS	
	SCN	
	♦SIEG	
	SPE	
	SST	
	♦THEF	
	WAB	
1N5364	AMR	388 -188
	CEN	
	CRI	
	FGRS	
	♦GSE	
	HTN	
	IDC	
	MSC	
	NJS	
	SCN	
	SIEG	
	SPE	
	SST	
	UPI	
	WAB	
1N5364A	Δ♦MOTA	388 -178
	AMR	
	CEN	
	CRI	
	FGRS	
	♦GSE	
	HTN	
	IDC	
	MSC	
	NJS	
	SCN	
	SST	
	WAB	
1N5364B	Δ♦MOTA	388 -163
	AMR	
	CEN	
	CRI	
	FGRS	
	♦GSE	
	HTN	
	IDC	
	♦MSC	
	NJS	
	SCN	
	♦SIEG	
	SPE	
	SST	
	♦THEF	
	UPI	
	WAB	
1N5365	AMR	389 -101
	CEN	
	CRI	
	♦FGRS	
	♦GSE	
	HTN	
	IDC	
	MSC	
	NJS	
	SCN	
	SIEG	
	SPE	
	SST	
	UPI	
	WAB	
1N5365A	ΔMOTA	389 - 92
	AMR	
	CEN	
	CRI	
	♦GSE	
cont.next col.		

TYPE No.	MFRS	Pg&Line
1N5365A		
(cont.)	HTN	
	IDC	
	MAL	
	MSC	
	NJS	
	SCN	
	SPE	
	SST	
	UPI	
	WAB	
1N5365B	Δ♦MOTA	389 - 77
	AMR	
	CEN	
	CRI	
	♦GSE	
	HTN	
	IDC	
	♦MSC	
	NJS	
	SCN	
	♦SIEG	
	SPE	
	SST	
	♦THEF	
	UPI	
	WAB	
1N5366	AMR	389 -198
	CEN	
	CRI	
	♦FGRS	
	♦GSE	
	HTN	
	IDC	
	MSC	
	NJS	
	SCN	
	SIEG	
	SPE	
	SST	
	UPI	
1N5366A	ΔMOTA	389 -192
	AMR	
	CEN	
	CRI	
	♦GSE	
	HTN	
	IDC	
	MAL	
	MSC	
	NJS	
	SCN	
	SPE	
	SST	
1N5366B	Δ♦MOTA	389 -181
	AMR	
	CEN	
	CRI	
	♦GSE	
	HTN	
	IDC	
	♦MSC	
	NJS	
	SCN	
	♦SIEG	
	SPE	
	SST	
	♦THEF	
1N5367	AMR	390 -109
	CEN	
	CRI	
	♦FGRS	
	♦GSE	
	HTN	
	IDC	
	MSC	
	NJS	
	SCN	
	SIEG	
	SPE	
	SST	
	WAB	
1N5367A	Δ♦MOTA	390 -103
	AMR	
	CEN	
	CRI	
	♦GSE	
	HTN	
	IDC	
	MSC	
	NJS	
	SCN	
	SST	
	WAB	
1N5367B	Δ♦MOTA	390 - 92
	AMR	
	CEN	
	CRI	
	♦GSE	
	HTN	
	IDC	
	♦MSC	
	NJS	
	SCN	
	♦SIEG	
	SPE	
	SST	
	♦THEF	
	WAB	
1N5368	AMR	391 - 42
	CEN	
	CRI	
	♦FGRS	
	♦GSE	
	HTN	
	IDC	
	MSC	
	NJS	
	SCN	
	SIEG	
	SPE	
	SST	
1N5368A	ΔMOTA	391 - 35
	AMR	
	CEN	
	CRI	
	♦GSE	
	HTN	
	IDC	
	MAL	
	MSC	
	NJS	
	SCN	
	SPE	
	SST	
1N5368B	Δ♦MOTA	391 - 23
	AMR	
	CEN	
	CRI	
	♦GSE	
	HTN	
	IDC	
	♦MSC	
	NJS	
	SCN	
	♦SIEG	
	SPE	
	SST	
	♦THEF	
	WAB	
1N5369	AMR	391 -179
	CEN	
	CRI	
	♦FGRS	
	♦GSE	
	HTN	
	IDC	
	MSC	
	NJS	
	SCN	
	SIEG	
	SPE	
	SST	
	UPI	
1N5369A	ΔMOTA	391 -173
	AMR	
	CEN	
	CRI	
	♦GSE	
	HTN	
	IDC	
	MAL	
	MSC	
	NJS	
	SCN	
	SPE	
	SST	
1N5369B	Δ♦MOTA	391 -162
	AMR	
	CEN	
	CRI	
	♦GSE	
	HTN	
	IDC	
	♦MSC	
	NJS	
	SCN	
	♦SIEG	
	SPE	
	SST	
	♦THEF	
	WAB	
1N5370	AMR	392 - 93
	CEN	
	CRI	
	♦FGRS	
	♦GSE	
	HTN	
	IDC	
	MSC	
	NJS	
	SCN	
	SIEG	
	SST	

Δ-Registered with JEDEC by this manufacturer

♦-Mfr's data sheet available in microfilm service

1. TYPE No. CROSS INDEX

IN TYPE NUMBER SEQUENCE

TYPE No.	MFRS	Pg&Line
1N5370A	ΔMOTA	392 - 84
	AMR	
	CEN	
	CRI	
	♦GSE	
	HTN	
	IDC	
	MAL	
	MSC	
	NJS	
	SCN	
	SPE	
	SST	
1N5370B	Δ♦MOTA	392 - 70
	AMR	
	CEN	
	CRI	
	♦GSE	
	HTN	
	IDC	
	♦MSC	
	NJS	
	SCN	
	♦SIEG	
	SPE	
	SST	
	♦THEF	
1N5371	AMR	392 -175
	CEN	
	CRI	
	♦FGRS	
	♦GSE	
	HTN	
	IDC	
	MSC	
	NJS	
	SCN	
	SIEG	
	SPE	
	SST	
1N5371A	Δ♦MOTA	392 -170
	AMR	
	CEN	
	CRI	
	♦GSE	
	HTN	
	IDC	
	MSC	
	NJS	
	SCN	
	SPE	
	SST	
1N5371B	Δ♦MOTA	392 -164
	AMR	
	CEN	
	CRI	
	♦GSE	
	HTN	
	IDC	
	♦MSC	
	NJS	
	SCN	
	♦SIEG	
	SPE	
	SST	
	♦THEF	
1N5372	AMR	393 - 13
	CEN	
	CRI	
	♦FGRS	
	♦GSE	
	HTN	
	IDC	
	MSC	
	NJS	
	SCN	
	SST	
1N5372A	Δ♦MOTA	393 - 8
	AMR	
	CEN	
	CRI	
	♦GSE	
	HTN	
	IDC	
	MSC	
	NJS	
	SCN	
	SST	
1N5372B	Δ♦MOTA	392 -197
	AMR	
	CEN	
	CRI	
	♦GSE	
	HTN	
	IDC	
	♦MSC	
	NJS	
	SCN	
	♦SIEG	
	SPE	
	SST	
	♦THEF	
	WAB	
1N5373	AMR	393 -104
	CEN	
	CRI	
	♦FGRS	
	♦GSE	
	HTN	
	IDC	
	MSC	
	NJS	
	SCN	
	SIEG	
	SST	
1N5373A	Δ♦MOTA	393 - 97
	AMR	
	CEN	
	CRI	
	♦GSE	
	HTN	
	IDC	
	MSC	
	NJS	
	SCN	
	SPE	
	SST	
1N5373B	Δ♦MOTA	393 - 86
	AMR	
	CEN	
	CRI	
	♦GSE	
	HTN	
	IDC	
	♦MSC	
	NJS	
	SCN	
	♦SIEG	
	SPE	
	SST	
	♦THEF	
	WAB	
1N5374	CEN	394 - 21
	CRI	
	♦FGRS	
	♦GSE	
	HTN	
	IDC	
	MSC	
	NJS	
	SCN	
	SIEG	
	SST	
1N5374A	Δ♦MOTA	394 - 13
	CEN	
	CRI	
	♦GSE	
	HTN	
	IDC	
	MSC	
	NJS	
	SCN	
	SPE	
	SST	
1N5374B	Δ♦MOTA	393 -197
	CEN	
	CRI	
	♦GSE	
	HTN	
	IDC	
	♦MSC	
	NJS	
	SCN	
	♦SIEG	
	SPE	
	SST	
	♦THEF	
	WAB	
1N5375	CEN	394 -132
	CRI	
	♦FGRS	
	♦GSE	
	HTN	
	IDC	
	MSC	
	NJS	
	SCN	
	SIEG	
	SPE	
	SST	
	WAB	
1N5375A	ΔMOTA	394 -125
	CEN	
	CRI	
	♦GSE	
	HTN	
	IDC	
	MAL	
	MSC	
	NJS	
	SCN	
	SPE	
	SST	
1N5375B	Δ♦MOTA	394 -114
	CEN	
	CRI	
	♦GSE	
	HTN	
	IDC	
	♦MSC	
	NJS	
	SCN	
	SPE	
	SST	
	♦THEF	
1N5376	CEN	394 -196
	CRI	
	♦FGRS	
	♦GSE	
	HTN	
	IDC	
	MSC	
	NJS	
	SCN	
	SIEG	
	SST	
1N5376A	Δ♦MOTA	394 -195
	CEN	
	♦GSE	
	HTN	
	IDC	
	MSC	
	NJS	
	SCN	
	SST	
1N5376B	Δ♦MOTA	394 -193
	CEN	
	♦GSE	
	HTN	
	IDC	
	♦MSC	
	NJS	
	SCN	
	♦SIEG	
	SPE	
	SST	
	♦THEF	
1N5377	CEN	395 - 42
	CRI	
	♦FGRS	
	♦GSE	
	HTN	
	IDC	
	MSC	
	NJS	
	SCN	
	SIEG	
	SPE	
	SST	
1N5377A	ΔMOTA	395 - 36
	CEN	
	CRI	
	♦GSE	
	HTN	
	IDC	
	MAL	
	MSC	
	NJS	
	SCN	
	SPE	
	SST	
1N5377B	Δ♦MOTA	395 - 25
	CEN	
	CRI	
	♦GSE	
	HTN	
	IDC	
	♦MSC	
	NJS	
	SCN	
	♦SIEG	
	SST	
	♦THEF	
	WAB	
1N5378	CEN	395 -140
	CRI	
	♦FGRS	
	♦GSE	
	HTN	
	IDC	
	MSC	
	NJS	
	SCN	
	SIEG	
	SST	
	WAB	
1N5378A	ΔMOTA	395 -130
	CEN	
	CRI	
	♦GSE	
	HTN	
	IDC	
	MAL	
	MSC	
	NJS	
	SCN	
	SPE	
	SST	
	WAB	
1N5378B	Δ♦MOTA	395 -115
	CEN	
	CRI	
	♦GSE	
	HTN	
	IDC	
	♦MSC	
	NJS	
	SCN	
	♦SIEG	
	SPE	
	SST	
	♦THEF	
	WAB	
1N5379	CEN	396 - 67
	CRI	
	♦FGRS	
	♦GSE	
	HTN	
	IDC	
	MSC	
	NJS	
	SCN	
	SIEG	
	SPE	
	SST	
1N5379A	ΔMOTA	396 - 61
	CEN	
	CRI	
	♦GSE	
	HTN	
	IDC	
	MAL	
	MSC	
	NJS	
	SCN	
	SST	
1N5379B	Δ♦MOTA	396 - 51
	CEN	
	CRI	
	♦GSE	
	HTN	
	IDC	
	♦MSC	
	NJS	
	SCN	
	♦SIEG	
	SST	
	♦THEF	
1N5380	CEN	396 -154
	CRI	
	♦FGRS	
	♦GSE	
	HTN	
	IDC	
	MSC	
	NJS	
	SCN	
	SIEG	
	SST	
1N5380A	ΔMOTA	396 -148
	CEN	
	CRI	
	♦GSE	
	HTN	
	IDC	
	MAL	
	MSC	
	NJS	
	SCN	
	SST	
1N5380B	Δ♦MOTA	396 -137
	CEN	
	CRI	
	♦GSE	
	HTN	
	IDC	
	♦MSC	
	NJS	
	SCN	
	♦SIEG	
	SPE	
	SST	
	♦THEF	
1N5381	CEN	397 - 43
	CRI	
	♦FGRS	
	♦GSE	
	HTN	
	IDC	
	MSC	
	NJS	
	SCN	
	SIEG	
	SST	
1N5381A	Δ♦MOTA	397 - 37
	CEN	
	CRI	
	♦GSE	
	HTN	
	IDC	
	MSC	
	NJS	
	SCN	
	SPE	
	SST	
1N5381B	Δ♦MOTA	397 - 26
	CEN	
	CRI	
	♦GSE	
	HTN	
	IDC	
	♦MSC	
	NJS	
	SCN	
	♦SIEG	
	SST	
	♦THEF	
1N5382	CEN	397 -124
	CRI	
	♦FGRS	
	♦GSE	
	HTN	
	MSC	
	NJS	
	SCN	
	SIEG	
	SST	
	WAB	
1N5382A	Δ♦MOTA	397 -120
	CEN	
	CRI	
	♦GSE	
	HTN	
	MSC	
	NJS	
	SCN	
	SST	
1N5382B	Δ♦MOTA	397 -112
	CEN	
	CRI	
	♦GSE	
	HTN	
	IDC	
	♦MSC	
	NJS	
	SCN	
	♦SIEG	
	SPE	
	SST	
	♦THEF	
1N5383	CEN	397 -180
	CRI	
	♦FGRS	
	♦GSE	
	HTN	
	MSC	
	NJS	
	SCN	
	SIEG	
	SPE	
	SST	
1N5383A	Δ♦MOTA	397 -174
	CEN	
	CRI	
	♦GSE	
	HTN	
	MSC	
	NJS	
	SCN	
	SPE	
	SST	
	UPI	
1N5383B	Δ♦MOTA	397 -163
	CEN	
	CRI	
	♦GSE	
	HTN	
	♦MSC	
	NJS	
	SCN	
	♦SIEG	
	SPE	
	SST	
	♦THEF	
	WAB	
1N5384	CEN	398 - 69
	CRI	
	♦FGRS	
	♦GSE	
	HTN	
	MSC	
	NJS	
	SCN	
	SIEG	
	SPE	
	SST	
1N5384A	Δ♦MOTA	398 - 64
	CEN	
	CRI	
	♦GSE	
	HTN	
	MSC	
	NJS	
	SCN	
	SPE	
	SST	
1N5384B	Δ♦MOTA	398 - 53
	CEN	
	CRI	
	♦GSE	
	HTN	
	♦MSC	
	NJS	
	SCN	
	♦SIEG	
	SST	
	♦THEF	
1N5385	CEN	398 -133
	CRI	
	♦FGRS	
	♦GSE	
	HTN	
	MSC	
	NJS	
	SCN	
	SIEG	
	SST	
1N5385A	Δ♦MOTA	398 -130
	CEN	
	CRI	
	♦GSE	
	HTN	
	MSC	
	NJS	
	SCN	
	SST	
1N5385B	Δ♦MOTA	398 -126
	CEN	
	CRI	
	♦GSE	
	HTN	
	♦MSC	
	NJS	
	SCN	
	♦SIEG	
	SST	
	♦THEF	
1N5386	CEN	398 -183
	CRI	
	♦FGRS	
	♦GSE	
	HTN	
	MSC	
	NJS	
	SCN	
	SIEG	
	SST	
1N5386A	Δ♦MOTA	398 -177
	CEN	
	CRI	
	♦GSE	
	HTN	
	MSC	
	NJS	
	SCN	
	SPE	
	SST	
1N5386B	Δ♦MOTA	398 -166
	CEN	
	CRI	
	♦GSE	
	HTN	
	♦MSC	
	NJS	
	SCN	
	♦SIEG	
	SPE	
	SST	
	♦THEF	
1N5387	CEN	399 - 58
	CRI	
	♦FGRS	
	♦GSE	
	HTN	
	MSC	
	NJS	
	SCN	
	SIEG	
	SST	
1N5387A	Δ♦MOTA	399 - 55
	CEN	
	CRI	
	♦GSE	
	HTN	
cont.next col.		
1N5387A		
(cont.)	MSC	
	NJS	SCN
		SST
1N5387B	Δ♦MOTA	399 - 51
	CEN	CRI
	♦GSE	HTN
	♦MSC	NJS
	SCN	♦SIEG
	SST	♦THEF
1N5388	CEN	399 - 91
	CRI	♦FGRS
	♦GSE	HTN
	MSC	NJS
	SCN	SIEG
	SPE	SST
1N5388A	ΔMOTA	399 - 85
	CEN	CRI
	♦GSE	HTN
	MAL	MSC
	NJS	SCN
	SPE	SST
		UPI
1N5388B	Δ♦MOTA	399 - 75
	CEN	CRI
	♦GSE	HTN
	♦MSC	NJS
	SCN	♦SIEG
	SPE	SST
	♦THEF	UPI
		WAB
1N5389	EDI	241 - 20
1N5391	ΔPRX	283 -107
	CEN	CODI
	♦DII	♦DIX
	EDL	♦FEC
	FGRS	GIC
	HTN	♦INC
	MEHK	♦MOTA
	RECT	RFE
	SCN	SPE
	SSI	SSY
	UPI	WAB
1N5391G	♦DII	283 -108
1N5392	ΔPRX	283 -161
	CEN	CODI
	♦DII	♦DIX
	EDL	♦FEC
	FGRS	GIC
	HTN	♦INC
	MEHK	♦MOTA
	RECT	RFE
	SCN	SPE
	SSI	UPI
		WAB
1N5392G	♦DII	283 -162
1N5393	ΔPRX	284 - 8
	CEN	CODI
	♦DII	♦DIX
	EDL	♦FEC
	FGRS	GIC
	HTN	♦INC
	MEHK	♦MOTA
	RECT	RFE
	SCN	SPE
	SSI	WAB
1N5393G	♦DII	284 - 9
1N5394	ΔPRX	284 - 54
	CEN	CODI
	♦DII	EDL
	♦FEC	FGRS
	GIC	HTN
	♦INC	MEHK
	RECT	SCN
	SPE	SSI
		WAB
1N5394G	♦DII	284 - 55
1N5395	ΔPRX	284 -115
	CEN	CODI
	♦DII	♦DIX
	EDL	♦FEC
	FGRS	GIC
	HTN	♦INC
	MEHK	♦MOTA
	RECT	RFE
	SCN	SPE
	SSI	WAB
1N5395G	♦DII	284 -116
1N5395GP	GIC	284 -117
1N5396	ΔPRX	284 -161
	CEN	CODI
	♦DII	EDL
	♦FEC	FGRS
	GIC	HTN
	♦INC	MEHK
	RECT	SCN
	SPE	SSI
		WAB
1N5396G	♦DII	284 -162
1N5396GP	GIC	284 -163
1N5397	ΔPRX	284 -219
	CEN	CODI
	♦DII	♦DIX
	EDL	♦FEC
	FGRS	GIC
	HTN	♦INC
	MEHK	♦MOTA
	RECT	RFE
	SCN	SPE
	SSI	WAB
1N5397G	♦DII	284 -220
1N5397GP	GIC	285 - 1
1N5398	ΔPRX	285 - 74
cont.next col.		
1N5398		
(cont.)	CEN	
	CODI	♦DII
	♦DIX	EDL
	♦FEC	FGRS
	GIC	HTN
	♦INC	MEHK
	♦MOTA	RECT
	RFE	SCN
	SSI	WAB
1N5398G	♦DII	285 - 75
1N5398GP	GIC	285 - 76
1N5399	ΔPRX	402 - 75
	CEN	CODI
	♦DII	♦DIX
	EDL	♦FEC
	FGRS	GIC
	HTN	♦INC
	MEHK	♦MOTA
	RECT	RFE
	SCN	SPE
	SSI	WAB
1N5399G	♦DII	402 - 76
1N5399GP	GIC	402 - 77
1N5400	Δ♦PRX	287 -205
	ASI	CEN
	CODI	CRI
	♦DII	♦DIT
	♦DIX	EDL
	ELT	ETC
	FEC	♦FGRS
	♦GIC	GTC
	HTN	♦INC
	MEHK	♦MOTA
	NJS	♦RECT
	RFE	SCN
	SOD	SPE
	♦SSI	SST
	UPI	WAB
1N5400G	♦DII	287 -199
1N5401	Δ♦PRX	288 - 48
	ASI	CEN
	CODI	CRI
	♦DII	♦DIT
	♦DIX	EDL
	ELT	ETC
	FEC	♦FGRS
	♦GIC	GTC
	HTN	♦INC
	MEHK	♦MOTA
	NJS	♦RECT
	RFE	SCN
	SOD	SPE
	♦SSI	SST
	THEF	UPI
		WAB
1N5401G	♦DII	288 - 39
1N5402	Δ♦PRX	288 -130
	ASI	CEN
	CODI	CRI
	♦DII	♦DIT
	♦DIX	EDL
	ELT	ETC
	FEC	♦FGRS
	♦GIC	GTC
	HTN	♦INC
	MEHK	♦MOTA
	NJS	♦RECT
	RFE	SCN
	SOD	SPE
	♦SSI	SST
	SSY	STI
	THEF	UPI
		WAB
1N5402G	♦DII	288 -119
1N5403	Δ♦PRX	288 -162
	ASI	CEN
	CODI	CRI
	♦DIT	EDL
	ELT	ETC
	FEC	♦GIC
	GTC	HTN
	♦INC	MEHK
	NJS	♦RECT
	SCN	SOD
	♦SSI	SST
	UPI	WAB
1N5404	Δ♦PRX	289 - 7
	ASI	CEN
	CODI	CRI
	♦DII	♦DIT
	♦DIX	EDL
	ELT	ETC
	FEC	♦FGRS
	♦GIC	GTC
	HTN	♦INC
	MEHK	♦MOTA
	NJS	♦RECT
	RFE	SCN
	SOD	SPE
	♦SSI	SST
	STI	THEF
	UPI	WAB
1N5404G	♦DII	288 -217
1N5405	Δ♦PRX	289 - 28
	ASI	CEN
	CODI	CRI
	♦DIT	EDL
	ELT	ETC
	FEC	♦GIC
	GTC	HTN
	♦INC	MEHK
	NJS	♦RECT
cont.next page		

Δ-Registered with JEDEC by this manufacturer

♦-Mfr's data sheet available in microfilm service

1. TYPE No. CROSS INDEX

IN TYPE NUMBER SEQUENCE

TYPE No.	MFRS	Pg&Line
1N5405		
(cont.)	SCN	
	SOD	♦SSI
	SST	SSY
	UPI	WAB
1N5406	Δ♦PRX	289 - 89
	ASI	CEN
	CODI	CRI
	♦DII	♦DIT
	♦DIX	EDL
	ELT	ETC
	FEC	♦FGRS
	♦GIC	GTC
	HTN	♦INC
	MEHK	♦MOTA
	NJS	♦RECT
	RFE	SCN
	SOD	SPE
	♦SSI	SST
	SSY	THEF
	UPI	WAB
1N5406G	♦DII	289 - 79
1N5407	ΔPRX	289 -159
	ASI	CEN
	CODI	CRI
	♦DII	♦DIT
	♦DIX	EDL
	ELT	ETC
	♦FGRS	♦GIC
	GTC	HTN
	♦INC	MEHK
	♦MOTA	NJS
	♦RECT	RFE
	SCN	SOD
	SPE	♦SSI
	SST	THEF
	UPI	WAB
1N5407G	♦DII	289 -147
1N5408	ΔPRX	402 -191
	ASI	CEN
	CODI	CRI
	♦DII	♦DIT
	♦DIX	EDL
	ELT	ETC
	♦FGRS	♦GIC
	GTC	HTN
	♦INC	MEHK
	♦MOTA	NJS
	♦RECT	RFE
	SCN	SOD
	SPE	♦SSI
	SST	UPI
		WAB
1N5408G	♦DII	402 -180
1N5409	ΔTRWS	301 -156
	EDL	SSI
	SST	TRWO
1N5410	ΔTRWS	295 - 49
	EDL	SSI
	SST	TRWO
		UPI
1N5412	HITJ	245 - 63
		MSC
1N5413	HITJ	246 -174
		MSC
1N5414	HITJ	246 -214
		MSC
1N5415	♦GIC	252 - 91
	♦MSC	SEN
	SPE	SSI
	♦THEF	TRWO
	♦TRWS	♦UNI
1N5416	ΔSET	253 - 57
	ASI	CRI
	♦GIC	♦MSC
	SEN	SPE
	SSI	♦THEF
	TRWO	♦TRWS
	♦UNI	WAB
1N5417	ΔSET	254 - 48
	CRI	♦GIC
	♦MSC	SEN
	SSI	♦THEF
	TRWO	♦TRWS
		♦UNI
1N5418	ΔSET	254 -178
	CRI	DIT
	♦GIC	♦MSC
	SEN	SPE
	SSI	♦THEF
	TRWO	♦TRWS
		♦UNI
1N5419	CRI	255 - 51
	♦GIC	♦MSC
	SEN	SSI
	♦THEF	TRWO
	♦TRWS	♦UNI
1N5420	CRI	255 -121
	♦GIC	♦MSC
	SEN	SSI
	♦THEF	TRWO
	♦TRWS	♦UNI
1N5426	ΔMIC	231 -167
	♦APD	UPI
1N5433	SSI	247 -194
		TRWS
1N5434	CRI	261 - 37
	SSI	TRWS
1N5435	CRI	295 -151
	SSI	TRWS
1N5477	CSD	237 - 32
	SCN	SSI
1N5478	CSD	237 - 33
	SCN	SSI
1N5479	CSD	237 - 34
	SCN	SSI
1N5480	CSD	237 - 35
	SCN	SSI
1N5481	CSD	237 - 36
	SCN	SSI
1N5482	CSD	237 - 56
	EDL	SCN
		SSI
1N5483	CSD	237 - 57
	EDL	SCN
		SSI
1N5484	CRI	237 - 58
	CSD	EDL
	SCN	SSI
1N5485	CRI	237 - 59
	CSD	EDL
	SCN	SSI
1N5518	APD	166 - 25
	CODI	CRI
	EAS	GHZ
	KSI	♦MSC
1N5518A	Δ♦MOTA	166 - 18
	CODI	GHZ
	KSI	MSC
1N5518B	Δ♦MOTA	165 -205
	CODI	GHZ
	KSI	MSC
1N5518C	CODI	165 -201
	GHZ	KSI
		MSC
1N5518D	CODI	165 -199
	GHZ	KSI
		MSC
1N5519	APD	166 -200
	CODI	CRI
	EAS	GHZ
	IDC	KSI
		♦MSC
1N5519A	Δ♦MOTA	166 -195
	CODI	GHZ
	KSI	MSC
1N5519B	Δ♦MOTA	166 -176
	CODI	GHZ
	KSI	MSC
1N5519C	CODI	166 -171
	GHZ	KSI
		MSC
1N5519D	CODI	166 -169
	GHZ	KSI
		MSC
1N5520	APD	167 -165
	CODI	EAS
	GHZ	IDC
	KSI	♦MSC
1N5520A	Δ♦MOTA	167 -160
	CODI	CRI
	GHZ	KSI
		MSC
1N5520B	Δ♦MOTA	167 -142
	CODI	GHZ
	KSI	MSC
1N5520C	CODI	167 -137
	GHZ	KSI
		MSC
1N5520D	CODI	167 -135
	GHZ	KSI
		MSC
1N5521	APD	168 -184
	CODI	EAS
	GHZ	IDC
	KSI	♦MSC
		TRWS
1N5521A	Δ♦MOTA	168 -178
	CODI	CRI
	♦DIT	GHZ
	KSI	MSC
		TRWS
1N5521B	Δ♦MOTA	168 -157
	CODI	GHZ
	KSI	MSC
		TRWS
1N5521C	CODI	168 -148
	GHZ	KSI
	MSC	TRWS
1N5521D	CODI	168 -142
	GHZ	KSI
	MSC	TRWS
1N5522	APD	170 - 23
	CODI	EAS
	GHZ	IDC
	KSI	♦MSC
		TRWS
1N5522A	Δ♦MOTA	170 - 16
	CODI	CRI
	♦DIT	GHZ
	KSI	MSC
		TRWS
1N5522B	Δ♦MOTA	169 -196
	CODI	GHZ
	KSI	MSC
		TRWS
1N5522C	CODI	169 -185
	GHZ	KSI
	MSC	SPE
		TRWS
1N5522D	CODI	169 -179
	GHZ	KSI
	MSC	TRWS
1N5523	APD	171 -105
	CODI	EAS
	GHZ	IDC
	KSI	♦MSC
		TRWS
1N5523A	Δ♦MOTA	171 - 98
	CODI	CRI
	♦DIT	GHZ
	KSI	MSC
		TRWS
1N5523B	Δ♦MOTA	171 - 71
	CODI	GHZ
	KSI	MSC
		TRWS
1N5523C	CODI	171 - 61
	GHZ	KSI
	MSC	TRWS
1N5523D	CODI	171 - 55
	GHZ	KSI
	MSC	TRWS
1N5524	APD	172 -194
	CODI	EAS
	GHZ	IDC
	KSI	♦MSC
		TRWS
1N5524A	Δ♦MOTA	172 -188
	CODI	CRI
	♦DIT	GHZ
	KSI	MSC
		TRWS
1N5524B	Δ♦MOTA	172 -159
	CODI	GHZ
	KSI	MSC
	SPE	TRWS
1N5524C	CODI	172 -143
	GHZ	KSI
	MSC	TRWS
1N5524D	CODI	172 -135
	GHZ	KSI
	MSC	TRWS
1N5525	APD	175 - 46
	CODI	EAS
	GHZ	IDC
	KSI	♦MSC
	SPE	TRWS
		WAB
1N5525A	Δ♦MOTA	175 - 40
	CODI	CRI
	♦DIT	GHZ
	IDC	KSI
	MSC	TRWS
1N5525B	Δ♦MOTA	174 -177
	CODI	GHZ
	IDC	KSI
	MSC	TRWS
1N5525C	CODI	174 -156
	GHZ	KSI
	MSC	SPE
		TRWS
1N5525D	CODI	174 -147
	GHZ	KSI
	MSC	TRWS
1N5526	APD	178 - 15
	CODI	CRI
	EAS	GHZ
	IDC	KSI
	♦MSC	TRWS
1N5526A	Δ♦MOTA	178 - 10
	CODI	♦DIT
	GHZ	IDC
	KSI	MSC
	SES	TRWS
1N5526B	Δ♦MOTA	177 -198
	CODI	GHZ
	IDC	KSI
	MSC	SES
		TRWS
1N5526C	CODI	177 -181
	GHZ	IDC
	KSI	MSC
	SPE	TRWS
1N5526D	CODI	177 -172
	GHZ	IDC
	KSI	MSC
		TRWS
1N5527	APD	180 - 13
	CODI	EAS
	GHZ	IDC
	KSI	♦MSC
	SES	TRWS
1N5527A	Δ♦MOTA	180 - 7
	CODI	CRI
	♦DIT	GHZ
	IDC	KSI
	MSC	SES
		TRWS
1N5527B	Δ♦MOTA	179 -184
	CODI	GHZ
	IDC	KSI
	MSC	SES
		TRWS
1N5527C	CODI	179 -172
	GHZ	IDC
	KSI	MSC
		TRWS
1N5527D	CODI	179 -166
	GHZ	IDC
	KSI	MSC
	SPE	TRWS
1N5528	APD	181 -197
	CODI	EAS
	GHZ	IDC
	KSI	♦MSC
	SES	TRWS
1N5528A	Δ♦MOTA	181 -190
	CODI	CRI
	♦DIT	GHZ
	IDC	KSI
cont.next col.		
1N5528A		
(cont.)	MSC	
	SES	TRWS
1N5528B	Δ♦MOTA	181 -164
	CODI	GHZ
	IDC	KSI
	MSC	SES
		TRWS
1N5528C	CODI	181 -153
	GHZ	IDC
	KSI	MSC
		TRWS
1N5528D	CODI	181 -147
	GHZ	IDC
	KSI	MSC
		TRWS
1N5529	APD	185 - 27
	CODI	EAS
	GHZ	IDC
	KSI	♦MSC
	SES	TRWS
1N5529A	Δ♦MOTA	185 - 22
	CODI	CRI
	♦DIT	GHZ
	IDC	KSI
	MSC	SES
		TRWS
1N5529B	Δ♦MOTA	184 -212
	CODI	GHZ
	IDC	KSI
	MSC	SES
	SPE	TRWS
1N5529C	CODI	184 -200
	GHZ	IDC
	KSI	MSC
		TRWS
1N5529D	CODI	184 -194
	GHZ	IDC
	KSI	MSC
		TRWS
1N5530	APD	187 - 72
	CODI	EAS
	GHZ	IDC
	KSI	♦MSC
	SES	TRWS
1N5530A	Δ♦MOTA	187 - 66
	CODI	CRI
	♦DIT	GHZ
	IDC	KSI
	MSC	SES
		TRWS
1N5530B	Δ♦MOTA	187 - 38
	CODI	GHZ
	IDC	KSI
	MSC	SES
		TRWS
1N5530C	CODI	187 - 26
	GHZ	IDC
	KSI	MSC
		TRWS
1N5530D	CODI	187 - 19
	GHZ	IDC
	KSI	MSC
		TRWS
1N5531	APD	189 - 14
	CODI	GHZ
	IDC	IDI
	KSI	♦MSC
	SES	TRWS
1N5531A	Δ♦MOTA	189 - 10
	CODI	CRI
	♦DIT	GHZ
	IDC	KSI
	MSC	SES
		TRWS
1N5531B	Δ♦MOTA	188 -192
	CODI	GHZ
	IDC	KSI
	MSC	SES
		TRWS
1N5531C	CODI	188 -186
	GHZ	IDC
	KSI	MSC
	SPE	TRWS
1N5531D	CODI	188 -183
	GHZ	IDC
	KSI	MSC
	SPE	TRWS
1N5532	APD	190 -184
	CODI	GHZ
	IDC	KSI
	♦MSC	SES
		TRWS
1N5532A	Δ♦MOTA	190 -179
	CODI	CRI
	♦DIT	GHZ
	IDC	KSI
	MSC	SES
		TRWS
1N5532B	Δ♦MOTA	190 -154
	CODI	GHZ
	IDC	KSI
	MSC	SES
		TRWS
1N5532C	CODI	190 -145
	GHZ	IDC
	KSI	MSC
		TRWS
1N5532D	CODI	190 -142
	GHZ	IDC
	KSI	MSC
		TRWS
1N5533	APD	192 -149
cont.next col.		
1N5533		
(cont.)	CODI	
	GHZ	IDC
	KSI	♦MSC
		SES
1N5533A	Δ♦MOTA	192 -145
	CODI	CRI
	♦DIT	GHZ
	IDC	KSI
	MSC	SES
1N5533B	Δ♦MOTA	192 -126
	CODI	GHZ
	IDC	KSI
	MSC	SES
1N5533C	CODI	192 -121
	GHZ	IDC
	KSI	MSC
1N5533D	CODI	192 -118
	GHZ	IDC
	KSI	MSC
1N5534	APD	193 -183
	CODI	GHZ
	IDC	KSI
		♦MSC
1N5534A	Δ♦MOTA	193 -182
	CODI	CRI
	♦DIT	GHZ
	IDC	KSI
		MSC
1N5534B	Δ♦MOTA	193 -175
	CODI	GHZ
	IDC	KSI
	MSC	SES
1N5534C	CODI	193 -172
	GHZ	IDC
	KSI	MSC
1N5534D	CODI	193 -171
	GHZ	IDC
	KSI	MSC
1N5535	APD	194 -172
	CODI	GHZ
	IDC	KSI
	♦MSC	SES
1N5535A	Δ♦MOTA	194 -168
	CODI	CRI
	♦DIT	GHZ
	IDC	KSI
	MSC	SES
1N5535B	Δ♦MOTA	194 -150
	CODI	GHZ
	IDC	KSI
	MSC	SES
1N5535C	CODI	194 -144
	GHZ	IDC
	KSI	MSC
1N5535D	CODI	194 -141
	GHZ	IDC
	KSI	MSC
1N5536	APD	196 - 77
	CODI	GHZ
	IDC	KSI
	♦MSC	SES
1N5536A	Δ♦MOTA	196 - 74
	CODI	♦DIT
	GHZ	IDC
	KSI	MSC
		SES
1N5536B	Δ♦MOTA	196 - 55
	CODI	GHZ
	IDC	KSI
	MSC	SES
1N5536C	CODI	196 - 50
	GHZ	IDC
	KSI	MSC
1N5536D	CODI	196 - 47
	GHZ	IDC
	KSI	MSC
1N5537	APD	197 -109
	CODI	GHZ
	IDC	KSI
	♦MSC	SES
		SPE
1N5537A	Δ♦MOTA	197 -108
	CODI	CRI
	♦DIT	GHZ
	IDC	KSI
	MSC	SES
1N5537B	Δ♦MOTA	197 -104
	CODI	GHZ
	IDC	KSI
	MSC	SES
1N5537C	CODI	197 -103
	GHZ	IDC
	KSI	MSC
1N5537D	CODI	197 -102
	GHZ	IDC
	KSI	MSC
		SPE
1N5538	APD	198 - 84
	CODI	GHZ
	IDC	KSI
	♦MSC	SES
1N5538A	Δ♦MOTA	198 - 80
	CODI	CRI
	♦DIT	GHZ
	IDC	KSI
	MSC	SES
1N5538B	Δ♦MOTA	198 - 62
	CODI	GHZ
	IDC	KSI
	MSC	SES
1N5538C	CODI	198 - 54
	GHZ	IDC
	KSI	MSC

Δ-Registered with JEDEC by this manufacturer

♦-Mfr's data sheet available in microfilm service

1. TYPE No. CROSS INDEX

IN TYPE NUMBER SEQUENCE

TYPE No.	MFRS	Pg&Line
1N5538D	CODI	198 - 51
	GHZ	
	IDC	
	KSI	
	MSC	
1N5539	APD	199 -125
	CODI	
	GHZ	
	IDC	
	KSI	
	SES	
1N5539A	Δ♦MOTA	199 -124
	CODI	
	CRI	
	♦DIT	
	GHZ	
	IDC	
	KSI	
	SES	
1N5539B	Δ♦MOTA	199 -120
	CODI	
	GHZ	
	IDC	
	KSI	
	SES	
1N5539C	CODI	199 -119
	GHZ	
	IDC	
	KSI	
1N5539D	CODI	199 -118
	GHZ	
	IDC	
	KSI	
1N5540	Δ♦MOTA	200 - 79
	APD	
	CODI	
	GHZ	
	IDC	
	KSI	
	♦MSC	
	SES	
1N5540A	Δ♦MOTA	200 - 77
	CODI	
	♦DIT	
	GHZ	
	IDC	
	KSI	
	MSC	
	SES	
1N5540B	Δ♦MOTA	200 - 62
	CODI	
	GHZ	
	IDC	
	KSI	
	MSC	
	SES	
1N5540C	CODI	200 - 55
	GHZ	
	IDC	
	KSI	
	MSC	
1N5540D	CODI	200 - 52
	GHZ	
	IDC	
	KSI	
	MSC	
	SPE	
1N5541	APD	201 -187
	GHZ	
	IDC	
	KSI	
	♦MSC	
	SES	
1N5541A	Δ♦MOTA	201 -184
	♦DIT	
	GHZ	
	IDC	
	KSI	
	MSC	
	SES	
1N5541B	Δ♦MOTA	201 -167
	GHZ	
	IDC	
	KSI	
	MSC	
	SES	
	SPE	
1N5541C	GHZ	201 -159
	IDC	
	KSI	
	MSC	
1N5541D	GHZ	201 -156
	IDC	
	KSI	
	MSC	
	SPE	
1N5542	APD	203 - 86
	GHZ	
	IDC	
	KSI	
	♦MSC	
	SES	
1N5542A	Δ♦MOTA	203 - 83
	♦DIT	
	GHZ	
	IDC	
	KSI	
	MSC	
	SES	
1N5542B	Δ♦MOTA	203 - 68
	GHZ	
	IDC	
	KSI	
	MSC	
	SES	
1N5542C	GHZ	203 - 63
	IDC	
	KSI	
	MSC	
1N5542D	GHZ	203 - 60
	IDC	
	KSI	
	MSC	
	SPE	
1N5543	APD	204 -104
	GHZ	
	IDC	
	KSI	
	SES	
1N5543A	Δ♦MOTA	204 -103
	♦DIT	
	GHZ	
	IDC	
	KSI	
	SES	
1N5543B	Δ♦MOTA	204 - 99
	GHZ	
	IDC	
	KSI	
	SES	
1N5543C	GHZ	204 - 98
	IDC	
	KSI	
1N5543D	GHZ	204 - 97
	KSI	
1N5544	APD	206 - 38
	GHZ	
	KSI	
	SES	
1N5544A	Δ♦MOTA	206 - 36
	♦DIT	
	GHZ	
	KSI	
	SES	
1N5544B	Δ♦MOTA	206 - 31
	GHZ	
	KSI	
	SES	
1N5544C	GHZ	206 - 30
	KSI	
1N5544D	GHZ	206 - 29
	IDC	
	KSI	
1N5545	GHZ	206 -155
	IDC	
	KSI	
	♦MSC	
	SES	
1N5545A	Δ♦MOTA	206 -152
	♦DIT	
	GHZ	
	IDC	
	KSI	
	MSC	
	SES	
1N5545B	Δ♦MOTA	206 -135
	GHZ	
	IDC	
	KSI	
	MSC	
	SES	
	SPE	
1N5545C	GHZ	206 -130
	IDC	
	KSI	
	MSC	
1N5545D	GHZ	206 -127
	IDC	
	KSI	
	MSC	
1N5546	GHZ	206 - 39
	IDC	
	KSI	
	SES	
1N5546A	Δ♦MOTA	206 - 37
	♦DIT	
	GHZ	
	IDC	
	KSI	
	SES	
1N5546B	Δ♦MOTA	208 - 23
	GHZ	
	IDC	
	KSI	
	MSC	
	SES	
	WAB	
1N5546C	GHZ	208 - 17
	IDC	
	KSI	
	MSC	
1N5546D	GHZ	208 - 14
	IDC	
	KSI	
	MSC	
	SPE	
1N5550	ΔSET	254 -105
	GIC	
	♦MSC	
	SEN	
	♦SSI	
	♦UNI	
	UPI	
1N5551	ΔSET	255 - 22
	GIC	
	♦MSC	
	SEN	
	SPE	
	♦SSI	
	♦UNI	
	WAB	
1N5552	ΔSET	255 -145
	GIC	
	♦MSC	
	SEN	
	SPE	
	♦SSI	
	♦UNI	
1N5553	ΔSET	256 - 3
	CRI	
	GIC	
	♦MSC	
	SEN	
	♦SSI	
	♦UNI	
1N5554	ΔSET	256 - 76
	CRI	
	GIC	
	♦MSC	
	SEN	
	SPE	
	♦SSI	
1N5555	Δ♦GSE	316 - 4
	♦MSC	
	SCN	
	♦SIEG	
1N5556	Δ♦GSE	316 - 5
	CRI	
	♦MSC	
	SCN	
	♦SIEG	
	WAB	
1N5557	Δ♦GSE	316 - 6
	♦MSC	
	SCN	
	♦SIEG	
1N5558	Δ♦GSE	316 - 7
	CRI	
	♦MSC	
	SCN	
	♦SIEG	
1N5559	♦APD	178 -145
	CRI	
	IDC	
	MSC	
	SES	
1N5559A	IDC	178 -134
	MSC	
	SCN	
1N5559B	CEN	178 -102
	IDC	
	MSC	
	SCN	
1N5560	♦APD	180 -138
	IDC	
	MSC	
	SES	
1N5560A	CRI	180 -126
	IDC	
	MSC	
	SCN	
1N5560B	CEN	180 - 95
	IDC	
	MSC	
	SCN	
1N5561	♦APD	182 -126
	IDC	
	MSC	
	SES	
1N5561A	IDC	182 -114
	MSC	
	SCN	
	SPE	
1N5561B	CEN	182 - 80
	IDC	
	MSC	
	SCN	
1N5562	♦APD	185 -154
	IDC	
	MSC	
	SES	
1N5562A	CRI	185 -143
	IDC	
	MSC	
	SCN	
1N5562B	CEN	185 -111
	IDC	
	MSC	
	SCN	
1N5563	♦APD	188 - 13
	IDC	
	MSC	
	SES	
1N5563A	CRI	187 -208
	IDC	
	MSC	
	SCN	
1N5563B	CEN	187 -169
	IDC	
	MSC	
	SCN	
	SPE	
1N5564	♦APD	189 -127
	IDC	
	MSC	
	SES	
1N5564A	IDC	189 -115
	MSC	
	SCN	
1N5564B	CEN	189 - 82
	IDC	
	MSC	
	SCN	
1N5565	♦APD	191 -102
	IDC	
	MSC	
	SES	
1N5565A	CRI	191 - 88
	IDC	
	MSC	
	SCN	
1N5565B	CEN	191 - 49
	IDC	
	MSC	
	SCN	
	SPE	
1N5566	♦APD	193 - 46
	IDC	
	MSC	
	SES	
1N5566A	CRI	193 - 33
	IDC	
	MSC	
	SCN	
1N5566B	CEN	193 - 2
	IDC	
	MSC	
	SCN	
1N5567	♦APD	195 -101
	IDC	
	MSC	
	SES	
1N5567A	CRI	195 - 86
	IDC	
	MSC	
	SCN	
1N5567B	CEN	195 - 49
	IDC	
	MSC	
	SCN	
1N5568	♦APD	196 -190
	IDC	
	MSC	
	SES	
	SPE	
1N5568A	IDC	196 -176
	MSC	
	SCN	
1N5568B	CEN	196 -144
	IDC	
	MSC	
	SCN	
	SPE	
1N5569	♦APD	198 -209
	IDC	
	MSC	
	SES	
1N5569A	CRI	198 -194
	IDC	
	MSC	
	SCN	
	SES	
1N5569B	CEN	198 -160
	IDC	
	MSC	
	SCN	
	SES	
1N5570	♦APD	200 -199
	IDC	
	MSC	
	SES	
1N5570A	CRI	200 -165
	IDC	
	MSC	
	SCN	
	SES	
1N5570B	CEN	200 -153
	IDC	
	MSC	
	SCN	
	SES	
1N5571	♦APD	202 - 99
	IDC	
	MSC	
	SES	
1N5571A	CRI	202 - 85
	IDC	
	MSC	
	SCN	
	SES	
1N5571B	CEN	202 - 51
	IDC	
	MSC	
	SCN	
	SES	
1N5572	♦APD	203 -194
	IDC	
	MSC	
	SES	
1N5572A	CRI	203 -181
	IDC	
	MSC	
	SCN	
	SES	
1N5572B	CEN	203 -149
	IDC	
	MSC	
	SCN	
	SES	
1N5573	♦APD	205 -137
	IDC	
	MSC	
	SES	
1N5573A	CRI	205 -123
	IDC	
	MSC	
	SCN	
	SES	
1N5573B	CEN	205 - 88
	IDC	
	MSC	
	SCN	
	SES	
1N5574	♦APD	207 - 61
	IDC	
	MSC	
1N5574A	CRI	207 - 47
	IDC	
	MSC	
	SCN	
	SES	
1N5574B	CEN	207 - 13
	IDC	
	MSC	
	SCN	
	SES	
1N5575	♦APD	208 -154
	IDC	
	MSC	
	SES	
1N5575A	CRI	208 -141
	IDC	
	MSC	
	SCN	
	SES	
1N5575B	CEN	208 -106
	IDC	
	MSC	
	SCN	
	SES	
1N5576	IDC	210 - 6
	MSC	
	SES	
1N5576A	CRI	209 -198
	IDC	
	MSC	
	SCN	
	SES	
1N5576B	CEN	209 -172
	IDC	
	MSC	
	SCN	
	SES	
1N5577	IDC	211 - 43
	MSC	
	SES	
1N5577A	IDC	211 - 33
	MSC	
	SCN	
	SES	
1N5577B	CEN	211 - 9
	IDC	
	MSC	
	SCN	
	SES	
1N5578	IDC	212 - 52
	MSC	
	SES	
1N5578A	CRI	212 - 42
	IDC	
	MSC	
	SCN	
	SES	
1N5578B	CEN	212 - 21
	IDC	
	MSC	
	SCN	
	SES	
1N5579	IDC	213 - 68
	MSC	
	SES	
1N5579A	CRI	213 - 58
	IDC	
	MSC	
	SCN	
	SES	
1N5579B	CEN	213 - 38
	IDC	
	MSC	
	SCN	
	SES	
1N5580	IDC	214 - 63
	MSC	
	SES	
1N5580A	CRI	214 - 54
	IDC	
	MSC	
	SCN	
	SES	
1N5580B	CEN	214 - 35
	IDC	
	MSC	
	SCN	
	SES	
1N5581	IDC	215 - 53
	MSC	
	SES	
1N5581A	CRI	215 - 42
	IDC	
	MSC	
	SCN	
	SES	
1N5581B	CEN	215 - 21
	IDC	
	MSC	
	SCN	
	SES	
1N5582	IDC	216 - 57
	MSC	
	SES	
1N5582A	CRI	216 - 47
	IDC	
	MSC	
	SCN	
	SES	
1N5582B	CEN	216 - 27
	IDC	
	MSC	
	SCN	
	SES	
1N5583	IDC	217 - 38
	MSC	
	SES	
1N5583A	CRI	217 - 28
	IDC	
	MSC	
	SCN	
	SES	
1N5583B	CEN	217 - 8
	IDC	
	MSC	
	SCN	
	SES	
1N5584	IDC	218 - 21
	MSC	
	SES	
1N5584A	CRI	218 - 10
	IDC	
	MSC	
	SCN	
	SES	
1N5584B	CEN	217 -190
	IDC	
	MSC	
	SCN	
	SES	
1N5585	IDC	219 - 1
	MSC	
	SES	
1N5585A	CRI	218 -190
	IDC	
	MSC	
	SCN	
	SES	
1N5585B	CEN	218 -170
	IDC	
	MSC	
	SCN	
	SES	
1N5586	IDC	219 -179
	MSC	
	SES	
1N5586A	CRI	219 -169
	IDC	
	MSC	
	SCN	
	SES	
1N5586B	CEN	219 -152
	IDC	
	MSC	
	SCN	
	SES	
1N5587	IDC	220 -141
	MSC	
	SES	
1N5587A	CRI	220 -130
	IDC	
	MSC	
	SCN	
	SES	
1N5587B	CEN	220 -111
	IDC	
	MSC	
	SCN	
	SES	
1N5588	IDC	221 -104
	MSC	
	SES	
1N5588A	CRI	221 - 92
	IDC	
	MSC	
	SCN	
	SES	
	SPE	
1N5588B	CEN	221 - 75
	IDC	
	MSC	
	SCN	
	SES	
1N5589	IDC	222 - 57
	MSC	
	SES	
1N5589A	CRI	222 - 43
	IDC	
	MSC	
	SCN	
	SES	
1N5589B	CEN	222 - 26
	IDC	
	MSC	
	SCN	
	SES	
1N5590	IDC	223 - 11
	MSC	
	SES	
1N5590A	CRI	222 -187
	IDC	
	MSC	
	SCN	
	SES	
1N5590B	CEN	222 -171
	IDC	
	MSC	
	SCN	
	SES	
1N5591	IDC	224 - 44
	MSC	
	SES	
1N5591A	CRI	224 - 31
	IDC	
	MSC	
	SCN	
	SES	
1N5591B	CEN	224 - 15
	IDC	
	MSC	
	SCN	
	SES	
1N5592	IDC	224 -174
	MSC	
	SES	
1N5592A	CRI	224 -162
	IDC	
	MSC	
	SCN	
	SES	
1N5592B	CEN	224 -147
	IDC	
	MSC	
	SCN	
	SES	
1N5593	IDC	226 - 3
	MSC	
	SES	
1N5593A	IDC	225 -171
	MSC	
	SCN	
	SES	
1N5593B	CEN	225 -153
	IDC	
	MSC	
	SCN	
	SES	
1N5594	IDC	226 -185
	MSC	
	SES	
1N5594A	CRI	226 -173
	IDC	
	MSC	
	SCN	
	SES	
1N5594B	CEN	226 -157
	IDC	
	MSC	
	SCN	
	SES	
1N5595	SSI	423 -197
1N5596	SSI	425 -177
1N5597	Δ♦UNI	427 -135
	CRI	
	SSI	
1N5598	SSI	429 - 79
1N5599	SSI	417 -171
1N5600	MSC	423 -203
	SSI	
	UTX	
1N5601	CRI	425 -180
	MSC	
	SSI	
1N5602	MSC	417 -185
	SSI	
	UTX	
1N5603	Δ♦UNI	424 - 22
	MSC	
	SSI	
	UTX	
1N5604	MSC	425 -198
	SSI	
	UTX	
1N5605	♦APD	231 -147
	CEN	
	CRI	
	SES	
	SPE	
	STI	
1N5606	CEN	231 - 85
	CRI	
	IDC	
	MSC	
	STI	
1N5607	CRI	231 - 59
	IDC	
	MSC	
	STI	
1N5608	CEN	243 - 52
	CRI	
	HITJ	
	IDC	
	STI	
1N5609	CEN	249 - 79
	CRI	
	HITJ	
	IDC	
	STI	
1N5611	CRI	316 - 8
1N5614	ΔSET	254 -106
	ASI	
	CEN	
	♦GIC	
	MSC	
	SEN	
	SPE	
	♦SSI	
	THEF	
	WAB	
1N5615	ΔSET	254 - 49
	CEN	
	♦GIC	
	♦GICB	
	MSC	
	SEN	
	SSI	
	THEF	
	TRWO	
	♦TRWS	
1N5616	ΔSET	255 - 23
	CEN	
	♦GIC	
	MSC	
	SEN	
	♦SSI	
	THEF	
1N5617	ΔSET	254 -179
	CEN	
	♦GIC	
	♦GICB	
	MSC	
	SEN	
	SSI	
	THEF	
	TRWO	
	♦TRWS	
1N5618	ΔSET	255 -146
	ASI	
	CEN	
	♦GIC	
	MSC	
	SEN	
	♦SSI	
	THEF	
	WAB	
1N5619	CEN	255 -107
	♦GIC	
	♦GICB	
	MSC	
	SEN	
	SSI	
	THEF	
	TRWO	
	♦TRWS	
1N5620	ΔSET	256 - 4
	CEN	
	♦GIC	
	SEN	
	♦SSI	
	THEF	
1N5621	ΔSET	255 -191
	CEN	
	♦GIC	
	♦GICB	
	MSC	
	SEN	
	SSI	
	THEF	
	♦TRWS	
1N5622	ΔSET	256 - 77
	CEN	
	♦GIC	
	MSC	
	SEN	
	♦SSI	
	THEF	
1N5623	CEN	256 - 46
	DIT	
	♦GIC	
	♦GICB	
	MSC	
	SEN	
	SPE	
	SSI	
	THEF	
	♦TRWS	
1N5624	Δ♦GESY	254 -107
	♦ALGG	
	ASI	
	CEN	
	ELT	
	GDC	
	♦GIC	

cont.next page

Δ-Registered with JEDEC by this manufacturer

♦-Mfr's data sheet available in microfilm service

1. TYPE No. CROSS INDEX

IN TYPE NUMBER SEQUENCE

TYPE No.	MFRS	Pg&Line
1N5624		
(cont.)	SOD	
SPE	♦SSI	
SST	THEF	
UPI	WAB	
1N5625	Δ♦GESY	255 - 24
♦ALGG	ASI	
CEN	CRI	
ELT	GDC	
♦GIC	SOD	
SPE	♦SSI	
SST	THEF	
UPI	WAB	
1N5626	Δ♦GESY	237 - 73
♦ALGG	ASI	255 -147
CEN	CRI	
ELT	GDC	
♦GIC	SOD	
SPE	♦SSI	
SST	THEF	
	WAB	
1N5627	Δ♦GESY	237 - 74
♦ALGG	ASI	256 - 5
CEN	♦DIT	
GDC	♦GIC	
SOD	SPE	
♦SSI	THEF	
	WAB	
1N5629	Δ♦GSE	330 - 95
CEN	CRI	
♦MSC	SAR	
SCN	♦SIEG	
♦SLCB	THEF	
1N5629A	Δ♦GSE	330 - 96
CEN	♦DIT	
♦MSC	SAR	
SCN	♦SIEG	
♦SLCB	THEF	
1N5630	Δ♦GSE	330 - 97
CEN	♦MSC	
SAR	SCN	
♦SIEG	♦SLCB	
	♦THEF	
1N5630A	Δ♦GSE	330 - 98
CEN	CRI	
♦DIT	♦MSC	
SAR	SCN	
♦SIEG	♦SLCB	
	THEF	
1N5631	Δ♦GSE	330 - 99
CEN	CRI	
♦MSC	SAR	
SCN	♦SIEG	
♦SLCB	THEF	
1N5631A	Δ♦GSE	330 -100
CEN	♦DIT	
♦MSC	SAR	
SCN	♦SIEG	
♦SLCB	THEF	
1N5632	Δ♦GSE	330 -101
CEN	CRI	
♦MSC	SAR	
SCN	♦SIEG	
♦SLCB	THEF	
1N5632A	Δ♦GSE	330 -102
CEN	♦DIT	
♦MSC	SAR	
SCN	♦SIEG	
♦SLCB	THEF	
1N5633	Δ♦GSE	330 -103
CEN	CRI	
♦MSC	SAR	
SCN	♦SIEG	
♦SLCB	THEF	
1N5633A	Δ♦GSE	330 -104
CEN	♦DIT	
♦MSC	SAR	
SCN	♦SIEG	
♦SLCB	THEF	
1N5634	Δ♦GSE	330 -105
CEN	CRI	
♦MSC	SAR	
SCN	♦SIEG	
♦SLCB	SPE	
	THEF	
1N5634A	Δ♦GSE	330 -106
CEN	♦DIT	
♦MSC	SAR	
SCN	♦SIEG	
♦SLCB	THEF	
1N5635	Δ♦GSE	330 -107
CEN	♦MSC	
SAR	SCN	
♦SIEG	♦SLCB	
	THEF	
1N5635A	Δ♦GSE	330 -108
CEN	CRI	
♦DIT	♦MSC	
SAR	SCN	
♦SIEG	♦SLCB	
	THEF	
1N5636	Δ♦GSE	330 -109
CEN	♦MSC	
SAR	SCN	
♦SIEG	♦SLCB	
	THEF	
1N5636A	Δ♦GSE	330 -110
CEN	CRI	
♦DIT	♦MSC	
SAR	SCN	
♦SIEG	♦SLCB	
	THEF	
1N5637	Δ♦GSE	331 - 1
cont.next col.		

TYPE No.	MFRS	Pg&Line
1N5637		
(cont.)	CEN	
♦MSC	SAR	
SCN	♦SIEG	
	THEF	
1N5637A	Δ♦GSE	331 - 2
CEN	♦DIT	
♦MSC	SAR	
SCN	♦SIEG	
♦SLCB	THEF	
1N5638	Δ♦GSE	331 - 3
CEN	♦MSC	
SAR	SCN	
♦SIEG	♦SLCB	
	THEF	
1N5638A	Δ♦GSE	331 - 4
CEN	CRI	
♦DIT	♦MSC	
SAR	SCN	
♦SIEG	♦SLCB	
	THEF	
1N5639	Δ♦GSE	331 - 5
CEN	♦MSC	
SAR	SCN	
♦SIEG	♦SLCB	
	THEF	
1N5639A	Δ♦GSE	331 - 6
CEN	CRI	
♦DIT	♦MSC	
SAR	SCN	
♦SIEG	♦SLCB	
	THEF	
1N5640	Δ♦GSE	331 - 7
CEN	CRI	
♦MSC	SAR	
SCN	♦SIEG	
♦SLCB	THEF	
1N5640A	Δ♦GSE	331 - 8
CEN	♦DIT	
♦MSC	SAR	
SCN	♦SIEG	
♦SLCB	THEF	
1N5641	Δ♦GSE	331 - 9
CEN	♦MSC	
SAR	SCN	
♦SIEG	♦SLCB	
	THEF	
1N5641A	Δ♦GSE	331 - 10
CEN	CRI	
♦DIT	♦MSC	
SAR	SCN	
♦SIEG	♦SLCB	
	THEF	
1N5642	Δ♦GSE	331 - 11
CEN	♦MSC	
SAR	SCN	
♦SIEG	♦SLCB	
	THEF	
1N5642A	Δ♦GSE	331 - 12
CEN	♦DIT	
♦MSC	SAR	
SCN	♦SIEG	
♦SLCB	THEF	
1N5643	Δ♦GSE	331 - 13
CEN	♦MSC	
SAR	SCN	
♦SIEG	♦SLCB	
	THEF	
1N5643A	Δ♦GSE	331 - 14
CEN	♦DIT	
♦MSC	SAR	
SCN	♦SIEG	
♦SLCB	THEF	
1N5644	Δ♦GSE	331 - 15
CEN	♦MSC	
SAR	SCN	
♦SIEG	♦SLCB	
SPE	THEF	
1N5644A	Δ♦GSE	331 - 16
CEN	CRI	
♦DIT	♦MSC	
SAR	SCN	
♦SIEG	♦SLCB	
SPE	THEF	
1N5645	Δ♦GSE	331 - 17
CEN	♦MSC	
SAR	SCN	
♦SIEG	♦SLCB	
	THEF	
1N5645A	Δ♦GSE	331 - 18
CEN	♦DIT	
♦MSC	SAR	
SCN	♦SIEG	
♦SLCB	THEF	
1N5646	Δ♦GSE	331 - 19
CEN	♦MSC	
SAR	SCN	
♦SIEG	SLCB	
	THEF	
1N5646A	Δ♦GSE	331 - 20
CEN	♦DIT	
♦MSC	SAR	
SCN	♦SIEG	
♦SLCB	THEF	
1N5647	Δ♦GSE	331 - 21
CEN	♦MSC	
SAR	♦SIEG	
♦SLCB	THEF	
1N5647A	Δ♦GSE	331 - 22
CEN	♦CRI	
♦DIT	♦MSC	
SAR	♦SIEG	
♦SLCB	SPE	
	THEF	

TYPE No.	MFRS	Pg&Line
1N5648	Δ♦GSE	331 - 23
CEN	♦MSC	
SAR	SCN	
♦SIEG	♦SLCB	
	THEF	
1N5648A	Δ♦GSE	331 - 24
CEN	♦DIT	
♦MSC	SAR	
SCN	♦SIEG	
♦SLCB	THEF	
1N5649	Δ♦GSE	331 - 25
CEN	♦MSC	
SAR	SCN	
♦SIEG	SLCB	
	THEF	
1N5649A	Δ♦GSE	331 - 26
CEN	CRI	
♦DIT	♦MSC	
SAR	SCN	
♦SIEG	♦SLCB	
	THEF	
1N5650	Δ♦GSE	331 - 27
CEN	♦MSC	
SAR	SCN	
♦SIEG	♦SLCB	
	THEF	
1N5650A	Δ♦GSE	331 - 28
CEN	DIT	
♦MSC	SAR	
SCN	♦SIEG	
♦SLCB	THEF	
1N5651	Δ♦GSE	331 - 29
CEN	♦MSC	
SAR	SCN	
♦SIEG	♦SLCB	
	THEF	
1N5651A	Δ♦GSE	331 - 30
CEN	CRI	
DIT	♦MSC	
SAR	SCN	
♦SIEG	♦SLCB	
	THEF	
1N5652	Δ♦GSE	331 - 31
CEN	♦MSC	
SAR	SCN	
♦SIEG	♦SLCB	
	THEF	
1N5652A	Δ♦GSE	331 - 32
CEN	DIT	
♦MSC	SAR	
SCN	♦SIEG	
♦SLCB	SPE	
	THEF	
1N5653	Δ♦GSE	331 - 33
CEN	♦MSC	
SAR	SCN	
♦SIEG	♦SLCB	
	THEF	
1N5653A	Δ♦GSE	331 - 34
CEN	CRI	
DIT	♦MSC	
SAR	SCN	
♦SIEG	♦SLCB	
	THEF	
1N5654	Δ♦GSE	331 - 35
CEN	♦MSC	
SAR	SCN	
♦SIEG	♦SLCB	
	THEF	
1N5654A	Δ♦GSE	331 - 36
CEN	DIT	
♦MSC	SAR	
SCN	♦SIEG	
♦SLCB	THEF	
1N5655	Δ♦GSE	331 - 37
CEN	♦MSC	
SAR	SCN	
♦SIEG	♦SLCB	
	THEF	
1N5655A	Δ♦GSE	331 - 38
CEN	DIT	
♦MSC	SAR	
SCN	♦SIEG	
♦SLCB	THEF	
1N5656	Δ♦GSE	331 - 39
CEN	♦MSC	
SAR	SCN	
♦SIEG	♦SLCB	
	THEF	
1N5656A	Δ♦GSE	331 - 40
CEN	DIT	
♦MSC	SAR	
SCN	♦SIEG	
♦SLCB	THEF	
1N5657	Δ♦GSE	331 - 41
CEN	♦MSC	
SAR	SCN	
♦SIEG	♦SLCB	
	THEF	
1N5657A	Δ♦GSE	331 - 42
CEN	CRI	
♦MSC	SAR	
SCN	♦SIEG	
♦SLCB	THEF	
1N5658	Δ♦GSE	331 - 43
CEN	♦MSC	
SAR	SCN	
♦SIEG	♦SLCB	
	THEF	
1N5658A	Δ♦GSE	331 - 44
CEN	CRI	
DIT	♦MSC	
SAR	SCN	
cont.next col.		

TYPE No.	MFRS	Pg&Line
1N5658A		
(cont.)	♦SIEG	
♦SLCB	THEF	
1N5659	Δ♦GSE	331 - 45
CEN	♦MSC	
SAR	SCN	
♦SIEG	♦SLCB	
	THEF	
1N5659A	Δ♦GSE	331 - 46
CEN	DIT	
♦MSC	SAR	
SCN	♦SIEG	
♦SLCB	THEF	
1N5660	Δ♦GSE	331 - 47
CEN	♦MSC	
SAR	SCN	
♦SIEG	♦SLCB	
	THEF	
1N5660A	Δ♦GSE	331 - 48
CEN	DIT	
♦MSC	SAR	
SCN	♦SIEG	
♦SLCB	THEF	
1N5661	Δ♦GSE	331 - 49
CEN	CRI	
♦MSC	SAR	
SCN	♦SIEG	
♦SLCB	THEF	
1N5661A	Δ♦GSE	331 - 50
CEN	DIT	
♦MSC	SAR	
SCN	♦SIEG	
♦SLCB	THEF	
1N5662	Δ♦GSE	331 - 51
CEN	♦MSC	
SAR	SCN	
♦SIEG	♦SLCB	
	THEF	
1N5662A	Δ♦GSE	331 - 52
CEN	DIT	
♦MSC	SAR	
SCN	♦SIEG	
♦SLCB	THEF	
1N5663	Δ♦GSE	331 - 53
CEN	♦MSC	
SAR	SCN	
♦SIEG	♦SLCB	
	THEF	
1N5663A	Δ♦GSE	331 - 54
CEN	DIT	
♦MSC	SAR	
SCN	♦SIEG	
♦SLCB	THEF	
1N5664	Δ♦GSE	331 - 55
CEN	♦MSC	
SAR	SCN	
♦SIEG	♦SLCB	
	THEF	
1N5664A	Δ♦GSE	331 - 56
CEN	CRI	
DIT	♦MSC	
SAR	SCN	
♦SIEG	♦SLCB	
	THEF	
1N5665	Δ♦GSE	331 - 57
CEN	♦MSC	
SAR	SCN	
♦SIEG	♦SLCB	
	THEF	
1N5665A	Δ♦GSE	331 - 58
CEN	♦MSC	
SAR	SCN	
♦SIEG	♦SLCB	
	THEF	
1N5670A	CRI	164 - 92
1N5676A	CRI	169 -109
1N5678A	STI	172 - 59
1N5711	Δ♦HPA	231 -132
SPE	♦THEF	
	TRWM	
1N5712	Δ♦HPA	231 -160
♦THEF	♦TRWM	
1N5713	TRWM	231 -148
1N5719	Δ♦HPA	231 -204
	♦TRWM	
1N5720	CEN	245 - 16
	HITJ	
1N5721	CEN	244 -118
CRI	GDC	
	HITJ	
1N5726	GDC	246 - 41
	HITJ	
1N5727	GDC	245 -211
	HITJ	
1N5728	MSC	169 -197
1N5728B	♦APD	169 -198
CEN	♦INC	
♦MSC	SES	
	♦SIEG	
1N5728C	♦APD	169 -186
MSC	SIEG	
1N5728D	♦APD	169 -180
MSC	SIEG	
1N5729	MSC	171 - 72
1N5729B	♦APD	171 - 73
CEN	CRI	
♦INC	♦MSC	
	♦SIEG	
1N5729C	♦APD	171 - 62
MSC	SIEG	
1N5729D	♦APD	171 - 56
MSC	SIEG	
1N5730	MSC	172 -160

TYPE No.	MFRS	Pg&Line
1N5730B	♦APD	172 -161
CEN	CRI	
♦INC	♦MSC	
	♦SIEG	
1N5730C	♦APD	172 -144
	MSC	
1N5730D	♦APD	172 -136
	MSC	
1N5731	MSC	174 -178
1N5731B	♦APD	174 -179
CEN	CRI	
♦INC	♦MSC	
	♦SIEG	
1N5731C	♦APD	174 -157
MSC	SIEG	
1N5731D	♦APD	174 -148
MSC	SIEG	
1N5732B	♦APD	177 -199
CEN	CRI	
♦INC	♦MSC	
	♦SIEG	
1N5732C	♦APD	177 -182
MSC	SIEG	
1N5732D	♦APD	177 -173
MSC	SIEG	
1N5733B	♦APD	179 -185
CEN	♦INC	
♦MSC	♦SIEG	
1N5733C	♦APD	179 -173
MSC	SIEG	
1N5733D	♦APD	179 -167
	MSC	
1N5734B	♦APD	181 -165
CEN	♦INC	
♦MSC	♦SIEG	
	SPE	
1N5734C	♦APD	181 -154
CRI	MSC	
	SIEG	
1N5734D	♦APD	181 -148
MSC	SIEG	
1N5735B	♦APD	184 -213
CEN	♦INC	
♦MSC	♦SIEG	
1N5735C	♦APD	184 -201
MSC	SIEG	
1N5735D	♦APD	184 -195
MSC	SIEG	
1N5736B	♦APD	187 - 39
CEN	CRI	
♦INC	♦MSC	
	♦SIEG	
1N5736C	♦APD	187 - 27
MSC	SIEG	
1N5736D	♦APD	187 - 20
	MSC	
1N5737B	♦APD	188 -193
CEN	♦INC	
♦MSC	♦SIEG	
1N5737C	♦APD	188 -187
MSC	SIEG	
1N5737D	♦APD	188 -184
MSC	SIEG	
1N5738B	♦APD	190 -155
CEN	CRI	
♦INC	♦MSC	
	♦SIEG	
1N5738C	♦APD	190 -146
MSC	SIEG	
1N5738D	♦APD	190 -143
MSC	SIEG	
1N5739B	♦APD	192 -127
CEN	♦INC	
♦MSC	♦SIEG	
1N5739C	♦APD	192 -122
MSC	SIEG	
1N5739D	♦APD	192 -119
MSC	SIEG	
1N5740B	♦APD	194 -151
CEN	CRI	
♦INC	♦MSC	
	♦SIEG	
1N5740C	♦APD	194 -145
MSC	SIEG	
1N5740D	♦APD	194 -142
MSC		
1N5741B	♦APD	196 - 56
CEN	♦INC	
♦MSC	SIEG	
1N5741C	♦APD	196 - 51
MSC	SIEG	
1N5741D	♦APD	196 - 48
MSC	SIEG	
1N5742B	♦APD	198 - 63
CEN	CRI	
♦INC	♦MSC	
	♦SIEG	
1N5742C	♦APD	198 - 55
MSC	SIEG	
1N5742D	♦APD	198 - 52
MSC	SIEG	
1N5743B	♦APD	200 - 63
CEN	♦INC	
♦MSC	♦SIEG	
1N5743C	♦APD	200 - 56
MSC	SIEG	
1N5743D	♦APD	200 - 53
MSC	SIEG	
1N5744B	♦APD	201 -168
CEN	CRI	
♦INC	♦MSC	
	♦SIEG	
1N5744C	♦APD	201 -160
MSC	SIEG	

Δ-Registered with JEDEC by this manufacturer

♦-Mfr's data sheet available in microfilm service

1. TYPE No. CROSS INDEX

IN TYPE NUMBER SEQUENCE

TYPE No.	MFRS	Pg&Line
1N5744D	♦APD	201 -157
MSC	SIEG	
1N5745B	♦APD	203 - 69
CEN	♦INC	
♦MSC	♦SIEG	
1N5745C	♦APD	203 - 64
MSC	SIEG	
1N5745D	♦APD	203 - 61
MSC	SIEG	
1N5746B	♦APD	205 - 2
CEN	CRI	
♦INC	♦MSC	
	♦SIEG	
1N5746C	♦APD	204 -204
MSC	SIEG	
1N5746D	♦APD	204 -202
MSC	SIEG	
1N5747B	♦APD	206 -136
CEN	♦INC	
♦MSC	♦SIEG	
1N5747C	♦APD	206 -131
MSC	SIEG	
1N5747D	♦APD	206 -128
MSC	SIEG	
1N5748B	♦APD	208 - 24
CEN	CRI	
♦INC	♦MSC	
	♦SIEG	
1N5748C	♦APD	208 - 18
MSC	SIEG	
1N5748D	♦APD	208 - 15
MSC	SIEG	
1N5749B	♦APD	209 -108
CEN	♦MSC	
	♦SIEG	
1N5749C	♦APD	209 -102
MSC	SIEG	
1N5749D	♦APD	209 -101
MSC	SIEG	
1N5750B	♦APD	210 -145
CEN	♦MSC	
♦MULB	♦PHIN	
♦RTCF	♦SIEG	
	♦VALG	
1N5750C	♦APD	210 -140
MSC	SIEG	
1N5750D	♦APD	210 -139
MSC	SIEG	
1N5751B	♦APD	211 -165
CEN	CRI	
♦MSC	♦MULB	
♦PHIN	♦RTCF	
♦SIEG	♦VALG	
1N5751C	♦APD	211 -161
MSC	SIEG	
1N5751D	♦APD	211 -160
MSC	SIEG	
1N5752B	♦APD	212 -177
CEN	♦MSC	
♦MULB	♦PHIN	
♦RTCF	♦SIEG	
	♦VALG	
1N5752C	♦APD	212 -173
MSC	SIEG	
1N5752D	♦APD	212 -172
MSC	SIEG	
1N5753B	♦APD	213 -188
CEN	♦MSC	
♦MULB	♦PHIN	
♦RTCF	♦SIEG	
	♦VALG	
1N5753C	♦APD	213 -185
MSC	SIEG	
1N5753D	♦APD	213 -184
MSC	SIEG	
1N5754B	♦APD	214 -173
CEN	MSC	
♦MULB	♦PHIN	
♦RTCF	♦VALG	
1N5754C	♦APD	214 -170
	MSC	
1N5754D	♦APD	214 -169
	MSC	
1N5755B	♦APD	215 -183
CEN	MSC	
♦MULB	♦PHIN	
♦RTCF	♦VALG	
1N5755C	♦APD	215 -180
	MSC	
1N5755D	♦APD	215 -179
	MSC	
1N5756B	♦APD	216 -156
CEN	CRI	
MSC	♦MULB	
♦PHIN	♦RTCF	
	♦VALG	
1N5756C	♦APD	216 -152
	MSC	
1N5756D	♦APD	216 -151
	MSC	
1N5757B	CEN	217 -146
MSC	♦MULB	
♦PHIN	♦RTCF	
	♦VALG	
1N5757C	MSC	217 -143
1N5757D	MSC	217 -142
1N5759A	UTX	445 - 5
1N5760A	UTX	445 - 6
1N5767	ΔHPA	231 -205
GHZ	MIC	
♦UNI	WAB	
1N5768	FSC	314 - 28
1N5770	FSC	314 - 29
1N5772	FSC	314 - 30

TYPE No.	MFRS	Pg&Line
1N5774	FSC	314 - 31
1N5802	Δ♦UNI	252 - 13
♦DIT	♦MSC	
♦SSI	♦THEF	
TRWO	♦TRWS	
1N5803	Δ♦UNI	252 -180
♦DIT	♦MSC	
♦THEF	TRWO	
	♦TRWS	
1N5804	Δ♦UNI	252 -197
♦DIT	♦MSC	
♦SSI	♦THEF	
TRWO	♦TRWS	
1N5805	Δ♦UNI	253 -119
♦DIT	♦MSC	
♦THEF	TRWO	
	♦TRWS	
1N5806	Δ♦UNI	253 -165
CRI	♦DIT	
♦MSC	♦SSI	
♦THEF	TRWO	
	♦TRWS	
1N5807	Δ♦UNI	257 -101
CRI	♦DIT	
MSC	SEN	
♦SSI	♦THEF	
TRWO	♦TRWS	
1N5808	Δ♦UNI	257 -210
♦DIT	MSC	
SEN	♦THEF	
TRWO	♦TRWS	
1N5809	Δ♦UNI	258 - 4
♦DIT	MSC	
SEN	SPE	
♦SSI	♦THEF	
TRWO	♦TRWS	
1N5810	Δ♦UNI	258 -155
♦DIT	MSC	
SEN	♦THEF	
TRWO	♦TRWS	
1N5811	Δ♦UNI	258 -165
♦DIT	MSC	
SEN	SPE	
♦SSI	♦THEF	
TRWO	♦TRWS	
1N5812	Δ♦UNI	252 - 32
CEN	DII	
♦DIT	MSC	
SCN	SPE	
	♦SSI	
1N5813	Δ♦UNI	257 -212
CEN	DII	
♦DIT	MSC	
SCN	♦SSI	
1N5814	Δ♦UNI	252 -218
CEN	DII	
♦DIT	MSC	
SCN	♦SSI	
1N5815	Δ♦UNI	258 -157
CEN	DII	
♦DIT	MSC	
SCN	♦SSI	
1N5816	Δ♦UNI	253 -183
CEN	DII	
♦DIT	MSC	
SCN	♦SSI	
1N5817	Δ♦MOTA	374 - 28
CEN	CRI	
♦DII	♦DIT	
♦GIC	♦INC	
♦ITTG	NJS	
	♦UNI	
1N5818	Δ♦MOTA	374 - 36
CEN	CRI	
♦DII	♦DIT	
♦GIC	♦INC	
♦ITTG	NJS	
	♦UNI	
1N5819	Δ♦MOTA	374 - 43
CEN	♦DII	
♦GIC	♦INC	
♦ITTG	NJS	
	♦UNI	
1N5820	Δ♦MOTA	374 - 71
CEN	CRI	
♦DII	♦DIT	
♦GIC	♦INC	
NJS	SPE	
1N5821	Δ♦MOTA	374 - 76
CEN	CRI	
♦DII	♦DIT	
♦GIC	♦INC	
	NJS	
1N5822	Δ♦MOTA	374 - 81
CEN	♦DII	
♦GIC	♦INC	
	NJS	
1N5823	Δ♦MOTA	374 -161
CEN	CRI	
♦DIT	SPE	
1N5824	Δ♦MOTA	374 -166
CEN	CRI	
	♦DIT	
1N5825	Δ♦MOTA	374 -174
CEN	CRI	
	♦DIT	
1N5826	Δ♦MOTA	374 -163
CEN	♦DII	
♦DIT	NJS	
1N5827	Δ♦MOTA	374 -168
CEN	♦DII	
♦DIT	MCY	
NJS	SPE	

TYPE No.	MFRS	Pg&Line
1N5828	Δ♦MOTA	374 -178
CEN	♦DII	
♦DIT	NJS	
1N5829	Δ♦MOTA	374 -218
CEN	♦DII	
♦DIT	NJS	
1N5830	Δ♦MOTA	374 -219
CEN	♦DII	
♦DIT	NJS	
1N5831	Δ♦MOTA	374 -220
CEN	♦DII	
♦DIT	NJS	
1N5832	Δ♦MOTA	375 - 43
CEN	CRI	
♦DII	♦DIT	
	SPE	
1N5833	Δ♦MOTA	375 - 45
CEN	CRI	
♦DII	♦DIT	
1N5834	Δ♦MOTA	375 - 48
CEN	CRI	
♦DII	♦DIT	
	MCY	
1N5835	CRI	251 -195
1N5836	CRI	252 - 79
1N5837A	CRI	164 - 60
1N5837B	CRI	164 - 48
1N5838A	CRI	164 -101
1N5839A	CRI	164 -181
1N5840A	CRI	165 - 25
1N5841A	CRI	165 -119
1N5842A	CRI	166 - 53
1N5842B	FERB	166 - 33
1N5843A	CRI	167 - 17
DIT	SPR	
1N5843B	DIT	166 -208
FERB	SPR	
1N5844A	CRI	167 -194
DIT	SPR	
1N5844B	DIT	167 -174
FERB	SPR	
1N5845A	CRI	169 - 8
DIT	SPR	
1N5845B	DIT	168 -199
FERB	SPR	
1N5846A	CRI	170 - 55
	SPR	
1N5846B	FERB	170 - 32
	SPR	
1N5847A	CRI	171 -135
	SPR	
1N5847B	FERB	171 -113
	SPR	
1N5848A	CRI	173 - 14
SPE	SPR	
1N5848B	FERB	172 -201
	SPR	
1N5849A	CRI	174 - 9
	SPR	
1N5849B	FERB	173 -207
	SPR	
1N5850A	CRI	175 - 79
	SPR	
1N5850B	FERB	175 - 53
	SPR	
1N5851A	CRI	176 - 50
	SPR	
1N5851B	FERB	178 - 22
	SPR	
1N5852A	CRI	180 - 46
	SPR	
1N5852B	FERB	180 - 21
	SPR	
1N5853A	CRI	182 - 26
	SPR	
1N5853B	FERB	181 -204
	SPR	
1N5854A	CRI	183 -178
	SPR	
1N5854B	FERB	183 -172
	SPR	
1N5855A	CRI	185 - 60
SPE	SPR	
1N5855B	FERB	185 - 35
	SPR	
1N5856A	CRI	187 -109
	SPR	
1N5856B	FERB	187 - 79
	SPR	
1N5857A	CRI	189 - 46
	SPR	
1N5857B	FERB	189 - 20
	SPR	
1N5858A	CRI	191 - 5
	SPR	
1N5858B	FERB	190 -191
	SPR	
1N5859A	CRI	192 -180
	SPR	
1N5859B	FERB	192 -157
	SPR	
1N5860A	CRI	193 -193
	SPR	
1N5860B	FERB	193 -186
	SPR	
1N5861A	CRI	195 - 5
	SPR	
1N5861B	FERB	194 -178
	SPR	
1N5862A	CRI	196 -110
	SPR	
1N5862B	FERB	196 - 85
	SPR	

TYPE No.	MFRS	Pg&Line
1N5863A	CRI	197 -117
	SPR	
1N5863B	FERB	197 -111
	SPR	
1N5864A	CRI	198 -119
	SPR	
1N5864B	FERB	198 - 90
	SPR	
1N5865A	CRI	199 -131
	SPR	
1N5865B	FERB	199 -127
	SPR	
1N5866A	CRI	200 -116
	SPR	
1N5866B	FERB	200 - 85
	SPR	
1N5867A	CRI	202 - 12
	SPR	
1N5867B	FERB	201 -195
	SPR	
1N5868A	CRI	203 -116
	SPR	
1N5868B	FERB	203 - 92
	SPR	
1N5869A	CRI	204 -110
	SPR	
1N5869B	FERB	204 -106
	SPR	
1N5870A	CRI	205 - 50
	SPR	
1N5870B	FERB	205 - 26
	SPR	
1N5871A	CRI	206 - 45
	SPR	
1N5871B	FERB	206 - 41
	SPR	
1N5872A	CRI	206 -185
	SPR	
1N5872B	FERB	206 -162
	SPR	
1N5873A	CRI	208 - 74
	SPR	
1N5873B	FERB	208 - 50
	SPR	
1N5874A	CRI	209 -145
	SPR	
1N5874B	FERB	209 -127
	SPR	
1N5875A	CRI	210 -183
	SPR	
1N5875B	FERB	210 -163
	SPR	
1N5876A	CRI	211 -199
	SPR	
1N5876B	FERB	211 -181
	SPR	
1N5877A	CRI	213 - 10
	SPR	
1N5877B	FERB	212 -193
	SPR	
1N5878A	CRI	214 - 14
	SPR	
1N5878B	SPR	214 - 1
1N5879A	CRI	214 -198
1N5880A	CRI	215 -147
1N5881A	CRI	216 - 5
1N5882A	CRI	216 -181
1N5883A	CRI	217 -168
1N5884A	CRI	218 -148
1N5885A	CRI	219 - 81
1N5886A	CRI	219 -132
1N5887A	CRI	220 - 90
1N5888A	CRI	221 - 57
1N5889A	CRI	222 - 7
1N5890A	CRI	222 -151
1N5891A	CRI	223 - 89
1N5892A	CRI	223 -178
1N5893A	CRI	224 -129
1N5894A	CRI	225 - 57
1N5895A	CRI	225 -134
1N5896A	CRI	226 - 77
1N5897A	CRI	226 -138
1N5898	CRI	261 -208
1N5899	CRI	261 -209
1N5900	CRI	262 - 1
1N5901	CRI	262 - 2
1N5902	CRI	262 - 3
1N5903	CRI	262 - 4
1N5904	CRI	262 - 5
1N5905	CRI	262 - 6
1N5907	Δ♦GSE	331 - 59
CRI	♦MSC	
SCN	♦SIEG	
	♦THEF	
1N5908	Δ♦GSE	331 - 60
CRI	♦MOTA	
SCN	SPE	
	♦THEF	
1N5913	CEN	166 - 97
CRI	♦MSC	
NJS	SIEG	
1N5913A	Δ♦MOTA	166 - 96
CEN	CRI	
♦MSC	NJS	
	SIEG	
1N5913B	Δ♦MOTA	166 - 95
CEN	♦MSC	
NJS	SIEG	
1N5913C	♦MSC	166 - 94
	SIEG	
1N5913D	♦MSC	166 - 93
	SIEG	
1N5914	Δ♦MOTA	167 - 65
cont.next col.		

TYPE No.	MFRS	Pg&Line
1N5914	CEN	
(cont.)		
CRI	♦MSC	
NJS	SIEG	
	SPE	
1N5914A	Δ♦MOTA	167 - 64
CEN	CRI	
♦MSC	NJS	
	SIEG	
1N5914B	Δ♦MOTA	167 - 63
CEN	♦MSC	
NJS	SIEG	
1N5914C	♦MSC	167 - 62
	SIEG	
1N5914D	♦MSC	167 - 61
	SIEG	
1N5915	CEN	168 - 50
♦MSC	NJS	
	SIEG	
1N5915A	Δ♦MOTA	168 - 49
CEN	CRI	
♦MSC	NJS	
	SIEG	
1N5915B	Δ♦MOTA	168 - 48
CEN	♦MSC	
NJS	SIEG	
1N5915C	♦MSC	168 - 47
	SIEG	
1N5915D	♦MSC	168 - 46
	SIEG	
1N5916	CEN	169 - 70
♦MSC	NJS	
	SIEG	
1N5916A	Δ♦MOTA	169 - 69
CEN	CRI	
♦MSC	NJS	
	SIEG	
1N5916B	Δ♦MOTA	169 - 68
CEN	♦MSC	
NJS	SIEG	
1N5916C	♦MSC	169 - 67
	SIEG	
1N5916D	♦MSC	169 - 66
	SIEG	
1N5917	CEN	170 -127
CRI	♦MSC	
NJS	SIEG	
1N5917A	Δ♦MOTA	170 -126
CEN	♦MSC	
NJS	SIEG	
1N5917B	Δ♦MOTA	170 -124
CEN	CRI	
♦MSC	NJS	
	SIEG	
1N5917C	♦MSC	170 -123
	SIEG	
1N5917D	♦MSC	170 -122
	SIEG	
1N5918	CEN	171 -209
♦MSC	NJS	
	SIEG	
1N5918A	Δ♦MOTA	171 -208
CEN	CRI	
♦MSC	NJS	
	SIEG	
1N5918B	Δ♦MOTA	171 -206
CEN	♦MSC	
NJS	SIEG	
1N5918C	♦MSC	171 -205
	SIEG	
1N5918D	♦MSC	171 -204
	SIEG	
1N5919	CEN	173 - 97
♦MSC	NJS	
	SIEG	
1N5919A	Δ♦MOTA	173 - 96
CEN	CRI	
♦MSC	NJS	
	SIEG	
1N5919B	Δ♦MOTA	173 - 94
CEN	♦MSC	
NJS	SIEG	
1N5919C	♦MSC	173 - 93
	SIEG	
1N5919D	♦MSC	173 - 92
	SIEG	
1N5920	CEN	175 -162
♦MSC	NJS	
	SIEG	
1N5920A	Δ♦MOTA	175 -161
CEN	CRI	
♦MSC	NJS	
	SIEG	
1N5920B	Δ♦MOTA	175 -158
CEN	♦MSC	
NJS	SIEG	
1N5920C	♦MSC	175 -156
	SIEG	
1N5920D	♦MSC	175 -155
	SIEG	
1N5921	CEN	178 -167
♦MSC	NJS	
	SIEG	
1N5921A	Δ♦MOTA	178 -165
CEN	CRI	
♦MSC	NJS	
	SIEG	
1N5921B	Δ♦MOTA	178 -160
CEN	♦MSC	
NJS	SIEG	
1N5921C	♦MSC	178 -157
	SIEG	
1N5921D	♦MSC	178 -156
	SIEG	

Δ-Registered with JEDEC by this manufacturer

♦-Mfr's data sheet available in microfilm service

1. TYPE No. CROSS INDEX

IN TYPE NUMBER SEQUENCE

TYPE No.	MFRS	Pg&Line
1N5922	CEN	180 -159
	♦MSC	
	NJS	
	SIEG	
1N5922A	Δ♦MOTA	180 -157
	CEN	
	♦MSC	
	NJS	
	SIEG	
1N5922B	Δ♦MOTA	180 -152
	CEN	
	♦MSC	
	NJS	
	SIEG	
1N5922C	♦MSC	180 -149
	SIEG	
1N5922D	♦MSC	180 -148
	SIEG	
1N5923	CEN	182 -148
	♦MSC	
	NJS	
	SIEG	
1N5923A	Δ♦MOTA	182 -146
	CEN	
	♦MSC	
	NJS	
	SIEG	
1N5923B	Δ♦MOTA	182 -141
	CEN	
	♦MSC	
	NJS	
	SIEG	
1N5923C	♦MSC	182 -138
	SIEG	
1N5923D	♦MSC	182 -137
	SIEG	
1N5924	CEN	185 -182
	♦MSC	
	NJS	
	SIEG	
1N5924A	Δ♦MOTA	185 -179
	CEN	
	♦MSC	
	NJS	
	SIEG	
1N5924B	Δ♦MOTA	185 -173
	CEN	
	♦MSC	
	NJS	
	SIEG	
1N5924C	♦MSC	185 -170
	SIEG	
1N5924D	♦MSC	185 -169
	SIEG	
1N5925	CEN	188 - 46
	♦MSC	
	NJS	
	SIEG	
1N5925A	Δ♦MOTA	188 - 43
	CEN	
	♦MSC	
	NJS	
	SIEG	
1N5925B	Δ♦MOTA	188 - 34
	CEN	
	♦MSC	
	NJS	
	SIEG	
1N5925C	♦MSC	188 - 31
	SIEG	
1N5925D	♦MSC	188 - 30
	SIEG	
1N5926	CEN	189 -159
	♦MSC	
	NJS	
	SIEG	
1N5926A	Δ♦MOTA	189 -156
	CEN	
	♦MSC	
	NJS	
	SIEG	
1N5926B	Δ♦MOTA	189 -148
	CEN	
	♦MSC	
	NJS	
	SIEG	
1N5926C	♦MSC	189 -145
	SIEG	
1N5926D	♦MSC	189 -144
	SIEG	
1N5927	CEN	191 -134
	♦MSC	
	NJS	
	SIEG	
1N5927A	Δ♦MOTA	191 -131
	CEN	
	♦MSC	
	NJS	
	SIEG	
1N5927B	Δ♦MOTA	191 -123
	CEN	
	♦MSC	
	NJS	
	SIEG	
	SPE	
1N5927C	♦MSC	191 -120
	SIEG	
1N5927D	♦MSC	191 -119
	SIEG	
1N5928	CEN	193 - 76
	♦MSC	
	NJS	
	SIEG	
1N5928A	Δ♦MOTA	193 - 73
	CEN	
	♦MSC	
	NJS	
	SIEG	
1N5928B	Δ♦MOTA	193 - 65
	CEN	
	♦MSC	
	NJS	
	SIEG	
1N5928C	♦MSC	193 - 62
	SIEG	
1N5928D	♦MSC	193 - 61
	SIEG	
1N5929	CEN	195 -132
	♦MSC	
	NJS	
	SIEG	
1N5929A	Δ♦MOTA	195 -128
	CEN	
	♦MSC	
	NJS	
	SIEG	
1N5929B	Δ♦MOTA	195 -120
	CEN	
	♦MSC	
	NJS	
	SIEG	
1N5929C	♦MSC	195 -117
	SIEG	
1N5929D	SIEG	195 -116
1N5930	CEN	197 - 13
cont.next col.		

TYPE No.	MFRS	Pg&Line
1N5930		
(cont.)	♦MSC	
	NJS	
	SIEG	
1N5930A	Δ♦MOTA	197 - 10
	CEN	
	♦MSC	
	NJS	
	SIEG	
1N5930B	Δ♦MOTA	197 - 3
	CEN	
	♦MSC	
	NJS	
	SIEG	
1N5930C	SIEG	196 -206
1N5930D	SIEG	196 -205
1N5931	CEN	199 - 29
	♦MSC	
	NJS	
	SIEG	
1N5931A	Δ♦MOTA	199 - 26
	CEN	
	♦MSC	
	NJS	
	SIEG	
1N5931B	Δ♦MOTA	199 - 19
	CEN	
	♦MSC	
	NJS	
	SIEG	
1N5931C	SIEG	199 - 16
1N5931D	SIEG	199 - 15
1N5932	CEN	201 - 22
	♦MSC	
	NJS	
	SIEG	
1N5932A	Δ♦MOTA	201 - 19
	CEN	
	♦MSC	
	NJS	
	SIEG	
1N5932B	Δ♦MOTA	201 - 12
	CEN	
	♦MSC	
	NJS	
	SIEG	
1N5932C	SIEG	201 - 7
1N5932D	SIEG	201 - 6
1N5933	CEN	202 -129
	♦MSC	
	NJS	
	SIEG	
	SPE	
1N5933A	Δ♦MOTA	202 -126
	CEN	
	♦MSC	
	NJS	
	SIEG	
1N5933B	Δ♦MOTA	202 -119
	CEN	
	♦MSC	
	NJS	
	SIEG	
1N5933C	SIEG	202 -116
1N5933D	SIEG	202 -115
1N5934	CEN	204 - 15
	♦MSC	
	NJS	
	SIEG	
1N5934A	Δ♦MOTA	204 - 12
	CEN	
	♦MSC	
	NJS	
	SIEG	
1N5934B	Δ♦MOTA	204 - 5
	CEN	
	♦MSC	
	NJS	
	SIEG	
1N5934C	SIEG	204 - 2
1N5934D	SIEG	204 - 1
1N5935	CEN	205 -169
	♦MSC	
	NJS	
	SIEG	
1N5935A	Δ♦MOTA	205 -166
	CEN	
	♦MSC	
	NJS	
	SIEG	
1N5935B	CEN	205 -159
	♦MSC	
	NJS	
	SIEG	
1N5935C	SIEG	205 -154
1N5935D	SIEG	205 -153
1N5936	CEN	207 - 93
	♦MSC	
	NJS	
	SIEG	
1N5936A	Δ♦MOTA	207 - 90
	CEN	
	♦MSC	
	NJS	
	SIEG	
1N5936B	Δ♦MOTA	207 - 83
	CEN	
	♦MSC	
	NJS	
	SIEG	
1N5936C	SIEG	207 - 78
1N5936D	SIEG	207 - 77
1N5937	CEN	208 -186
	♦MSC	
	NJS	
	SIEG	
1N5937A	Δ♦MOTA	208 -183
	CEN	
	♦MSC	
	NJS	
	SIEG	
1N5937B	Δ♦MOTA	208 -176
	CEN	
	♦MSC	
	NJS	
	SIEG	
1N5937C	SIEG	208 -171
1N5937D	SIEG	208 -170
1N5938	CEN	210 - 35
	♦MSC	
	NJS	
	SIEG	
1N5938A	Δ♦MOTA	210 - 32
	CEN	
	♦MSC	
	NJS	
	SIEG	
1N5938B	Δ♦MOTA	210 - 25
	CEN	
	♦MSC	
	NJS	
	SIEG	
1N5938C	SIEG	210 - 22
1N5938D	SIEG	210 - 21
1N5939	CEN	211 - 72
	CRI	
	♦MSC	
	NJS	
	SIEG	
1N5939A	Δ♦MOTA	211 - 69
	CEN	
	CRI	
cont.next col.		

TYPE No.	MFRS	Pg&Line
1N5939A		
(cont.)	♦MSC	
	NJS	
	SIEG	
1N5939B	Δ♦MOTA	211 - 62
	CEN	
	♦MSC	
	NJS	
	SIEG	
1N5939C	SIEG	211 - 59
1N5939D	SIEG	211 - 58
1N5940	CEN	212 - 83
	♦MSC	
	NJS	
	SIEG	
1N5940A	Δ♦MOTA	212 - 80
	CEN	
	CRI	
	♦MSC	
	NJS	
	SIEG	
1N5940B	Δ♦MOTA	212 - 73
	CEN	
	♦MSC	
	NJS	
	SIEG	
1N5940C	SIEG	212 - 68
1N5940D	SIEG	212 - 67
1N5941	CEN	213 -100
	♦MSC	
	NJS	
	SIEG	
1N5941A	Δ♦MOTA	213 - 97
	CEN	
	CRI	
	♦MSC	
	NJS	
	SIEG	
1N5941B	Δ♦MOTA	213 - 90
	CEN	
	♦MSC	
	NJS	
	SIEG	
1N5941C	SIEG	213 - 85
1N5941D	SIEG	213 - 84
1N5942	CEN	214 - 93
	♦MSC	
	NJS	
	SIEG	
1N5942A	Δ♦MOTA	214 - 90
	CEN	
	CRI	
	♦MSC	
	NJS	
	SIEG	
1N5942B	Δ♦MOTA	214 - 84
	CEN	
	♦MSC	
	NJS	
	SIEG	
1N5942C	SIEG	214 - 81
1N5942D	SIEG	214 - 80
1N5943	CEN	215 - 82
	♦MSC	
	NJS	
	SIEG	
1N5943A	Δ♦MOTA	215 - 79
	CEN	
	CRI	
	♦MSC	
	NJS	
	SIEG	
1N5943B	Δ♦MOTA	215 - 73
	CEN	
	♦MSC	
	NJS	
	SIEG	
1N5943C	SIEG	215 - 70
1N5943D	SIEG	215 - 69
1N5944	CEN	216 - 86
	♦MSC	
	NJS	
	SIEG	
1N5944A	Δ♦MOTA	216 - 83
	CEN	
	CRI	
	♦MSC	
	NJS	
	SIEG	
1N5944B	Δ♦MOTA	216 - 77
	CEN	
	♦MSC	
	NJS	
	SIEG	
1N5944C	SIEG	216 - 74
1N5944D	♦MSC	216 - 73
1N5945	CEN	217 - 67
	♦MSC	
	NJS	
	SIEG	
1N5945A	Δ♦MOTA	217 - 64
	CEN	
	CRI	
	♦MSC	
	NJS	
	SIEG	
1N5945B	Δ♦MOTA	217 - 58
	CEN	
	♦MSC	
	NJS	
	SIEG	
1N5945C	♦MSC	217 - 55
	SIEG	
1N5945D	♦MSC	217 - 54
	SIEG	
1N5946	CEN	218 - 50
	♦MSC	
	NJS	
	SIEG	
1N5946A	Δ♦MOTA	218 - 47
	CEN	
	CRI	
	♦MSC	
	NJS	
	SIEG	
1N5946B	Δ♦MOTA	218 - 41
	CEN	
	♦MSC	
	NJS	
	SIEG	
1N5946C	♦MSC	218 - 38
	SIEG	
1N5946D	♦MSC	218 - 37
	SIEG	
1N5947	CEN	219 - 26
	♦MSC	
	NJS	
	SIEG	
1N5947A	Δ♦MOTA	219 - 23
	CEN	
	CRI	
	♦MSC	
	NJS	
	SIEG	
1N5947B	Δ♦MOTA	219 - 18
	CEN	
	♦MSC	
	NJS	
	SIEG	
1N5947C	♦MSC	219 - 15
	SIEG	
1N5947D	♦MSC	219 - 14
	SIEG	
1N5948	CEN	220 - 5
	♦MSC	
	NJS	
	SIEG	

TYPE No.	MFRS	Pg&Line
1N5948A	Δ♦MOTA	220 - 2
	CEN	
	CRI	
	♦MSC	
	NJS	
	SIEG	
1N5948B	Δ♦MOTA	219 -196
	CEN	
	♦MSC	
	NJS	
	SIEG	
1N5948C	♦MSC	219 -193
	SIEG	
1N5948D	♦MSC	219 -192
	SIEG	
1N5949	CEN	220 -167
	♦MSC	
	NJS	
	SIEG	
1N5949A	Δ♦MOTA	220 -164
	CEN	
	CRI	
	♦MSC	
	NJS	
	SIEG	
1N5949B	Δ♦MOTA	220 -160
	CEN	
	♦MSC	
	NJS	
	SIEG	
1N5949C	MSC	220 -157
	SIEG	
1N5949D	♦MSC	220 -156
	SIEG	
1N5950	CEN	221 -127
	♦MSC	
	NJS	
	SIEG	
1N5950A	Δ♦MOTA	221 -124
	CEN	
	CRI	
	♦MSC	
	NJS	
	SIEG	
1N5950B	Δ♦MOTA	221 -120
	CEN	
	♦MSC	
	NJS	
	SIEG	
1N5950C	♦MSC	221 -117
	SIEG	
1N5950D	♦MSC	221 -116
	SIEG	
1N5951	CEN	222 - 81
	♦MSC	
	NJS	
	SIEG	
1N5951A	Δ♦MOTA	222 - 78
	CEN	
	CRI	
	♦MSC	
	NJS	
	SIEG	
1N5951B	Δ♦MOTA	222 - 74
	CEN	
	♦MSC	
	NJS	
	SIEG	
1N5951C	♦MSC	222 - 71
	SIEG	
1N5951D	♦MSC	222 - 70
	SIEG	
1N5952	CEN	223 - 34
	♦MSC	
	NJS	
	SIEG	
1N5952A	Δ♦MOTA	223 - 31
	CEN	
	CRI	
	♦MSC	
	NJS	
	SIEG	
1N5952B	Δ♦MOTA	223 - 27
	CEN	
	♦MSC	
	NJS	
	SIEG	
1N5952C	♦MSC	223 - 24
	SIEG	
1N5952D	♦MSC	223 - 23
	SIEG	
1N5953	CEN	224 - 68
	♦MSC	
	NJS	
	SIEG	
1N5953A	Δ♦MOTA	224 - 65
	CEN	
	CRI	
	♦MSC	
	NJS	
	SIEG	
1N5953B	Δ♦MOTA	224 - 61
	CEN	
	♦MSC	
	NJS	
	SIEG	
1N5953C	♦MSC	224 - 58
	SIEG	
1N5953D	♦MSC	224 - 57
	SIEG	
1N5954	CEN	225 - 6
	GIC	
	♦MSC	
	NJS	
	SIEG	
1N5954A	Δ♦MOTA	225 - 2
	CEN	
	CRI	
	GIC	
	♦MSC	
	NJS	
	SIEG	
1N5954B	Δ♦MOTA	224 -187
	CEN	
	GIC	
	♦MSC	
	NJS	
	SIEG	
1N5954C	♦MSC	224 -184
	SIEG	
1N5954D	♦MSC	224 -183
	SIEG	
1N5955	CEN	226 - 28
	GIC	
	♦MSC	
	NJS	
	SIEG	
1N5955A	Δ♦MOTA	226 - 24
	CEN	
	CRI	
	GIC	
	♦MSC	
	NJS	
	SIEG	
1N5955B	Δ♦MOTA	226 - 19
	CEN	
	GIC	
	♦MSC	
	NJS	
	SIEG	
1N5955C	♦MSC	226 - 16
	SIEG	
1N5955D	SIEG	226 - 15
1N5956	CEN	227 - 22
	GIC	
	♦MSC	
	NJS	
	SIEG	

TYPE No.	MFRS	Pg&Line
1N5956A	Δ♦MOTA	227 - 18
	CEN	
	CRI	
	GIC	
	♦MSC	
	NJS	
	SIEG	
1N5956B	Δ♦MOTA	227 - 13
	CEN	
	GIC	
	♦MSC	
	NJS	
	SIEG	
1N5956C	♦MSC	227 - 10
	SIEG	
1N5956D	♦MSC	227 - 9
	SIEG	
1N5985	♦MSC	164 - 65
	NJS	
1N5985A	Δ♦MOTA	164 - 61
	CRI	
	MSC	
	NJS	
	SIEG	
1N5985B	Δ♦MOTA	164 - 49
	♦INC	
	MSC	
	NJS	
	SIEG	
1N5985C	MSC	164 - 44
1N5985D	MSC	164 - 42
1N5986	♦MSC	164 -186
	NJS	
1N5986A	Δ♦MOTA	164 -182
	CRI	
	MSC	
	NJS	
	SIEG	
1N5986B	Δ♦MOTA	164 -165
	♦INC	
	MSC	
	NJS	
	SIEG	
1N5986C	MSC	164 -162
1N5986D	MSC	164 -160
1N5987	♦MSC	165 -125
	NJS	
1N5987A	Δ♦MOTA	165 -120
	CRI	
	MSC	
	NJS	
	SIEG	
1N5987B	Δ♦MOTA	165 - 98
	♦INC	
	MSC	
	NJS	
	SIEG	
1N5987C	MSC	165 - 94
1N5987D	MSC	165 - 91
1N5988	♦APD	166 - 60
	♦MSC	
	NJS	
1N5988A	Δ♦MOTA	166 - 54
	♦APD	
	CRI	
	MSC	
	NJS	
	SIEG	
1N5988B	Δ♦MOTA	166 - 34
	♦APD	
	CEN	
	♦INC	
	MSC	
	NJS	
	SIEG	
1N5988C	♦APD	166 - 30
	MSC	
1N5988D	♦APD	166 - 28
	MSC	
1N5989	♦APD	167 - 24
	♦MSC	
	NJS	
1N5989A	Δ♦MOTA	167 - 18
	♦APD	
	CRI	
	MSC	
	NJS	
	SIEG	
1N5989B	Δ♦MOTA	166 -209
	♦APD	
	CEN	
	♦INC	
	MSC	
	NJS	
	SIEG	
1N5989C	♦APD	166 -205
	MSC	
1N5989D	♦APD	166 -203
	MSC	
1N5990	♦APD	167 -201
	♦MSC	
	NJS	
1N5990A	Δ♦MOTA	167 -195
	♦APD	
	CRI	
	MSC	
	NJS	
	SIEG	
1N5990B	Δ♦MOTA	167 -175
	♦APD	
	CEN	
	♦INC	
	MSC	
	NJS	
	SIEG	
1N5990C	♦APD	167 -170
	MSC	
1N5990D	♦APD	167 -168
	MSC	
1N5991	♦APD	169 - 15
	♦MSC	
	NJS	
1N5991A	Δ♦MOTA	169 - 9
	♦APD	
	CRI	
	MSC	
	NJS	
	SIEG	
1N5991B	Δ♦MOTA	168 -200
	♦APD	
	CEN	
	♦INC	
	MSC	
	NJS	
	SIEG	
1N5991C	♦APD	168 -195
	MSC	
1N5991D	♦APD	168 -193
	MSC	
1N5992	♦APD	170 - 62
	♦MSC	
	NJS	
1N5992A	Δ♦MOTA	170 - 56
	♦APD	
	CRI	
	MSC	
	NJS	
	SIEG	
1N5992B	Δ♦MOTA	170 - 33
	♦APD	
	CEN	
	♦INC	
	MSC	
	NJS	
	SIEG	
1N5992C	♦APD	170 - 29
	MSC	
1N5992D	♦APD	170 - 27
	MSC	
1N5993	♦APD	171 -142
	♦MSC	
	NJS	

Δ-Registered with JEDEC by this manufacturer

♦-Mfr's data sheet available in microfilm service

1. TYPE No. CROSS INDEX

IN TYPE NUMBER SEQUENCE

TYPE No.	MFRS	Pg&Line
1N5993A	△♦MOTA	171 -136
	♦APD	
	CRI	
	MSC	
	NJS	
	SIEG	
1N5993B	△♦MOTA	171 -114
	♦APD	
	CEN	
	♦INC	
	MSC	
	NJS	
	SIEG	
1N5993C	♦APD	171 -110
	MSC	
1N5993D	♦APD	171 -108
	MSC	
1N5994	♦APD	173 - 22
	♦MSC	
	NJS	
1N5994A	△♦MOTA	173 - 15
	♦APD	
	CRI	
	MSC	
	NJS	
	SIEG	
1N5994B	△♦MOTA	172 -202
	♦APD	
	CEN	
	♦INC	
	MSC	
	SIEG	
1N5994C	♦APD	172 -199
	MSC	
1N5994D	♦APD	172 -197
	MSC	
1N5995	♦APD	175 - 86
	♦MSC	
1N5995A	△♦MOTA	175 - 80
	♦APD	
	CRI	
	MSC	
	SIEG	
1N5995B	△♦MOTA	175 - 54
	♦APD	
	CEN	
	♦INC	
	MSC	
	NJS	
	SIEG	
1N5995C	♦APD	175 - 51
	MSC	
1N5995D	♦APD	175 - 49
	MSC	
1N5996	♦APD	178 - 57
	♦MSC	
	NJS	
1N5996A	△♦MOTA	178 - 51
	♦APD	
	MSC	
	NJS	
	SIEG	
1N5996B	△♦MOTA	178 - 23
	♦APD	
	CEN	
	♦INC	
	MSC	
	NJS	
	SIEG	
1N5996C	♦APD	178 - 20
	MSC	
1N5996D	♦APD	178 - 18
	MSC	
1N5997	♦APD	180 - 54
	CRI	
	♦MSC	
	NJS	
1N5997A	△♦MOTA	180 - 47
	♦APD	
	MSC	
	NJS	
	SIEG	
1N5997B	△♦MOTA	180 - 22
	♦APD	
	CEN	
	♦INC	
	MSC	
	NJS	
	SIEG	
1N5997C	♦APD	180 - 18
	MSC	
1N5997D	♦APD	180 - 16
	MSC	
1N5998	♦APD	182 - 35
	♦MSC	
	NJS	
1N5998A	△♦MOTA	182 - 27
	♦APD	
	CRI	
	MSC	
	NJS	
	SIEG	
1N5998B	△♦MOTA	182 - 1
	♦APD	
	CEN	
	♦INC	
	MSC	
	NJS	
	SIEG	
1N5998C	♦APD	181 -202
	MSC	
1N5998D	♦APD	181 -200
	MSC	
1N5999	♦APD	185 - 70
	♦MSC	
	NJS	
1N5999A	△♦MOTA	185 - 61
	♦APD	
	CRI	
	MSC	
	NJS	
	SIEG	
1N5999B	△♦MOTA	185 - 36
	♦APD	
	CEN	
	♦INC	
	MSC	
	NJS	
	SIEG	
1N5999C	♦APD	185 - 32
	MSC	
1N5999D	♦APD	185 - 30
	MSC	
1N6000	♦APD	187 -117
	♦MSC	
	NJS	
1N6000A	△♦MOTA	187 -110
	♦APD	
	CRI	
	MSC	
	NJS	
1N6000B	△♦MOTA	187 - 80
	♦APD	
	CEN	
	♦INC	
	MSC	
	NJS	
1N6000C	♦APD	187 - 77
	MSC	
1N6000D	♦APD	187 - 75
	MSC	
1N6001	♦APD	189 - 54
	♦MSC	
	NJS	
1N6001A	△♦MOTA	189 - 47
	♦APD	
	CRI	
	MSC	
	NJS	
1N6001B	△♦MOTA	189 - 21

cont.next col.

TYPE No.	MFRS	Pg&Line
1N6001B		
(cont.)	♦APD	
	CEN	
	CRI	
	♦INC	
	MSC	
	NJS	
1N6001C	♦APD	189 - 18
	MSC	
1N6001D	♦APD	189 - 16
	MSC	
1N6002	♦APD	191 - 13
	♦MSC	
	NJS	
1N6002A	△♦MOTA	191 - 6
	♦APD	
	CRI	
	MSC	
	NJS	
1N6002B	△♦MOTA	190 -192
	♦APD	
	CEN	
	♦INC	
	MSC	
	NJS	
1N6002C	♦APD	190 -188
	MSC	
1N6002D	♦APD	190 -186
	MSC	
1N6003	♦APD	192 -188
	♦MSC	
	NJS	
1N6003A	△♦MOTA	192 -181
	♦APD	
	CRI	
	MSC	
	NJS	
1N6003B	△♦MOTA	192 -158
	♦APD	
	CEN	
	♦INC	
	MSC	
	NJS	
1N6003C	♦APD	192 -153
	MSC	
1N6003D	♦APD	192 -151
	MSC	
1N6004	♦APD	195 - 16
	♦MSC	
	NJS	
1N6004A	△♦MOTA	195 - 6
	♦APD	
	CRI	
	MSC	
	NJS	
1N6004B	△♦MOTA	194 -179
	♦APD	
	CEN	
	♦INC	
	MSC	
	NJS	
1N6004C	♦APD	194 -176
	MSC	
1N6004D	♦APD	194 -174
	MSC	
	SPE	
1N6005	♦APD	196 -119
	♦MSC	
	NJS	
1N6005A	△♦MOTA	196 -111
	♦APD	
	CRI	
	MSC	
	NJS	
1N6005B	△♦MOTA	196 - 86
	♦APD	
	CEN	
	♦INC	
	MSC	
	NJS	
1N6005C	♦APD	196 - 81
	MSC	
	SPE	
1N6005D	♦APD	196 - 79
	MSC	
1N6006	♦APD	198 -128
	♦MSC	
	NJS	
1N6006A	△♦MOTA	198 -120
	♦APD	
	CRI	
	MSC	
	NJS	
1N6006B	△♦MOTA	198 - 91
	♦APD	
	CEN	
	♦INC	
	MSC	
	NJS	
1N6006C	♦APD	198 - 88
	MSC	
1N6006D	♦APD	198 - 86
	MSC	
1N6007	♦APD	200 -125
	♦MSC	
	NJS	
1N6007A	△♦MOTA	200 -117
	♦APD	
	CRI	
	MSC	
	NJS	
1N6007B	△♦MOTA	200 - 86
	♦APD	
	CEN	
	♦INC	
	MSC	
	NJS	
1N6007C	♦APD	200 - 83
	MSC	
1N6007D	♦APD	200 - 81
	MSC	
1N6008	♦APD	202 - 20
	♦MSC	
	NJS	
1N6008A	△♦MOTA	202 - 13
	♦APD	
	CRI	
	MSC	
	NJS	
1N6008B	△♦MOTA	201 -196
	♦APD	
	CEN	
	♦INC	
	♦MSC	
	NJS	
1N6008C	♦APD	201 -193
	MSC	
1N6008D	♦APD	201 -191
	MSC	
1N6009	♦APD	203 -124
	♦MSC	
	NJS	
1N6009A	△♦MOTA	203 -117
	♦APD	
	CRI	
	MSC	
	NJS	
1N6009B	△♦MOTA	203 - 93
	♦APD	
	CEN	
	♦INC	
	MSC	
	NJS	
1N6009C	♦APD	203 - 90
	MSC	
1N6009D	♦APD	203 - 88
	MSC	

TYPE No.	MFRS	Pg&Line
1N6010	♦APD	205 - 58
	♦MSC	
	NJS	
1N6010A	△♦MOTA	205 - 51
	♦APD	
	CRI	
	MSC	
	NJS	
1N6010B	△♦MOTA	205 - 27
	♦APD	
	CEN	
	♦INC	
	MSC	
	NJS	
1N6010C	♦APD	205 - 23
	MSC	
1N6010D	♦APD	205 - 21
	MSC	
1N6011	♦APD	206 -194
	♦MSC	
	NJS	
1N6011A	△♦MOTA	206 -186
	♦APD	
	CRI	
	MSC	
	NJS	
1N6011B	△♦MOTA	206 -163
	♦APD	
	CEN	
	♦INC	
	MSC	
	NJS	
1N6011C	♦APD	206 -160
	MSC	
1N6011D	♦APD	206 -158
	MSC	
1N6012	♦APD	208 - 82
	♦MSC	
	NJS	
1N6012A	△♦MOTA	208 - 75
	♦APD	
	MSC	
	NJS	
1N6012B	△♦MOTA	208 - 51
	♦APD	
	CEN	
	♦INC	
	MSC	
	NJS	
1N6012C	♦APD	208 - 47
	MSC	
1N6012D	♦APD	208 - 45
	MSC	
1N6013	♦APD	209 -153
	♦MSC	
	NJS	
1N6013A	△♦MOTA	209 -146
	♦APD	
	CRI	
	MSC	
	NJS	
1N6013B	△♦MOTA	209 -128
	♦APD	
	CEN	
	MSC	
	NJS	
1N6013C	♦APD	209 -124
	MSC	
1N6013D	♦APD	209 -123
	MSC	
1N6014	♦APD	210 -190
	♦MSC	
	NJS	
1N6014A	△♦MOTA	210 -184
	♦APD	
	CRI	
	MSC	
	NJS	
1N6014B	△♦MOTA	210 -164
	♦APD	
	CEN	
	MSC	
	NJS	
1N6014C	♦APD	210 -161
	MSC	
1N6014D	♦APD	210 -160
	MSC	
1N6015	♦APD	212 - 3
	♦MSC	
	NJS	
1N6015A	△♦MOTA	211 -200
	♦APD	
	CRI	
	MSC	
	NJS	
1N6015B	△♦MOTA	211 -182
	♦APD	
	CEN	
	MSC	
	NJS	
1N6015C	♦APD	211 -179
	MSC	
1N6015D	♦APD	211 -178
	MSC	
1N6016	♦APD	213 - 17
	♦MSC	
	NJS	
1N6016A	△♦MOTA	213 - 11
	♦APD	
	CRI	
	MSC	
	NJS	
1N6016B	△♦MOTA	212 -194
	♦APD	
	CEN	
	MSC	
	NJS	
1N6016C	♦APD	212 -191
	MSC	
1N6016D	♦APD	212 -190
	MSC	
1N6017	♦APD	214 - 20
	MSC	
	NJS	
1N6017A	△♦MOTA	214 - 15
	♦APD	
	CRI	
	MSC	
	NJS	
1N6017B	△♦MOTA	214 - 2
	♦APD	
	CEN	
	MSC	
	NJS	
1N6017C	♦APD	213 -201
	MSC	
1N6017D	♦APD	213 -200
	MSC	
1N6018	♦APD	215 - 5
	MSC	
	NJS	
1N6018A	△MOTA	214 -199
	♦APD	
	MSC	
	NJS	
1N6018B	△♦MOTA	214 -186
	♦APD	
	CEN	
	MSC	
	NJS	
1N6018C	♦APD	214 -184
	MSC	
1N6018D	♦APD	214 -183
	MSC	
1N6019	♦APD	216 - 12
	MSC	
	NJS	

TYPE No.	MFRS	Pg&Line
1N6019A	△♦MOTA	216 - 6
	♦APD	
	CRI	
	MSC	
	NJS	
1N6019B	△♦MOTA	215 -196
	♦APD	
	CEN	
	MSC	
	NJS	
1N6019C	♦APD	215 -194
	MSC	
1N6019D	♦APD	215 -193
	MSC	
1N6020	♦APD	216 -187
	MSC	
	NJS	
1N6020A	△♦MOTA	216 -182
	♦APD	
	CRI	
	MSC	
	NJS	
1N6020B	△♦MOTA	216 -169
	♦APD	
	CEN	
	MSC	
	NJS	
1N6020C	♦APD	216 -167
	MSC	
1N6020D	♦APD	216 -166
	MSC	
1N6021	MSC	217 -174
	NJS	
1N6021A	△♦MOTA	217 -169
	CRI	
	MSC	
	NJS	
1N6021B	△♦MOTA	217 -157
	MSC	
	NJS	
1N6022	MSC	218 -155
	NJS	
1N6022A	△♦MOTA	218 -149
	CRI	
	MSC	
	NJS	
1N6022B	△♦MOTA	218 -139
	MSC	
	NJS	
1N6023	MSC	219 -138
	NJS	
1N6023A	△♦MOTA	219 -133
	CRI	
	MSC	
	NJS	
1N6023B	△♦MOTA	219 -125
	MSC	
	NJS	
1N6024	MSC	220 - 95
	NJS	
1N6024A	△♦MOTA	220 - 91
	CRI	
	MSC	
	NJS	
1N6024B	△♦MOTA	220 - 82
	MSC	
	NJS	
1N6025	MSC	221 - 61
	NJS	
1N6025A	△♦MOTA	221 - 58
	CRI	
	MSC	
	NJS	
1N6025B	△♦MOTA	221 - 51
	MSC	
	NJS	
1N6026	MSC	222 - 12
	NJS	
1N6026A	CRI	222 - 8
	MSC	
	NJS	
1N6026B	MSC	222 - 1
1N6027	MSC	222 -156
1N6027A	CRI	222 -152
	MSC	
1N6027B	MSC	222 -146
	NJS	
1N6028	MSC	223 -183
	NJS	
1N6028A	MSC	223 -179
	NJS	
1N6028B	MSC	223 -171
	NJS	
1N6029	MSC	224 -134
	NJS	
1N6029A	CRI	224 -130
	MSC	
	NJS	
1N6029B	MSC	224 -124
	NJS	
1N6030	MSC	225 -139
	NJS	
1N6030A	MSC	225 -135
	NJS	
1N6030B	MSC	225 -128
	NJS	
1N6031	MSC	226 -143
	NJS	
1N6031A	CRI	226 -139
	MSC	
	NJS	
1N6031B	MSC	226 -133
	NJS	
1N6036	△♦GSE	331 - 61
	CEN	
	♦MSC	
	SAR	
	SCN	
	SLCB	
	THEF	
1N6036A	△♦GSE	331 - 62
	CEN	
	CRI	
	♦MSC	
	SAR	
	SCN	
	SLCB	
	THEF	
1N6037	△♦GSE	331 - 63
	CEN	
	♦MSC	
	SAR	
	SCN	
	SLCB	
	THEF	
1N6037A	△♦GSE	331 - 64
	CEN	
	DIT	
	♦MSC	
	SAR	
	SCN	
	SLCB	
	THEF	
1N6038	△♦GSE	331 - 65
	CEN	
	♦MSC	
	SAR	
	SCN	
	SLCB	
	THEF	

TYPE No.	MFRS	Pg&Line
1N6038A	△♦GSE	331 - 66
	CEN	
	♦MSC	
	SAR	
	SCN	
	SLCB	
	THEF	
1N6039	△♦GSE	331 - 67
	CEN	
	♦MSC	
	SAR	
	SCN	
	SLCB	
	THEF	
1N6039A	△♦GSE	331 - 68
	CEN	
	♦MSC	
	SAR	
	SCN	
	SLCB	
	THEF	
1N6040	△♦GSE	331 - 69
	CEN	
	♦MSC	
	SAR	
	SCN	
	SLCB	
	THEF	
1N6040A	△♦GSE	331 - 70
	CEN	
	♦MSC	
	SAR	
	SCN	
	SLCB	
	THEF	
1N6041	△♦GSE	331 - 71
	CEN	
	CRI	
	♦MSC	
	SAR	
	SCN	
	SLCB	
	THEF	
1N6041A	△♦GSE	331 - 72
	CEN	
	DIT	
	♦MSC	
	SAR	
	SCN	
	SLCB	
	THEF	
1N6042	△♦GSE	331 - 73
	CEN	
	♦MSC	
	SAR	
	SCN	
	SLCB	
	THEF	
1N6042A	△♦GSE	331 - 74
	CEN	
	♦MSC	
	SAR	
	SCN	
	SLCB	
	THEF	
1N6043	△♦GSE	331 - 75
	CEN	
	♦MSC	
	SAR	
	SCN	
	SLCB	
	THEF	
1N6043A	△♦GSE	331 - 76
	CEN	
	♦MSC	
	SAR	
	SCN	
	SLCB	
	THEF	
1N6044	△♦GSE	331 - 77
	CEN	
	♦MSC	
	SAR	
	SCN	
	SLCB	
	THEF	
1N6044A	△♦GSE	331 - 78
	CEN	
	♦MSC	
	SAR	
	SCN	
	SLCB	
	THEF	
1N6045	△♦GSE	331 - 79
	CEN	
	♦MSC	
	SAR	
	SCN	
	SLCB	
	THEF	
1N6045A	△♦GSE	331 - 80
	CEN	
	♦MSC	
	SAR	
	SCN	
	SLCB	
	THEF	
1N6046	△♦GSE	331 - 81
	CEN	
	♦MSC	
	SAR	
	SCN	
	SLCB	
	THEF	
1N6046A	△♦GSE	331 - 82
	CEN	
	♦MSC	
	SAR	
	SCN	
	SLCB	
	THEF	
1N6047	△♦GSE	331 - 83
	CEN	
	♦MSC	
	SAR	
	SCN	
	SLCB	
	THEF	
1N6047A	△♦GSE	331 - 84
	CEN	
	♦MSC	
	SAR	
	SCN	
	SLCB	
	THEF	
1N6048	△♦GSE	331 - 85
	CEN	
	CRI	
	♦MSC	
	SAR	
	SCN	
	SLCB	
	THEF	
1N6048A	△♦GSE	331 - 86
	CEN	
	♦MSC	
	SAR	
	SCN	
	SLCB	
	THEF	
1N6049	△♦GSE	331 - 87
	CEN	
	♦MSC	
	SAR	
	SCN	
	SLCB	
	THEF	
1N6049A	△♦GSE	331 - 88
	CEN	
	♦MSC	
	SAR	
	SCN	
	SLCB	
	THEF	
1N6050	△♦GSE	331 - 89
	CEN	
	♦MSC	
	SAR	
	SCN	
	SLCB	
	THEF	
1N6050A	△♦GSE	331 - 90
	CEN	
	♦MSC	
	SAR	
	SCN	
	SLCB	
	THEF	
1N6051	△♦GSE	331 - 91
	CEN	
	CRI	
	♦MSC	
	SAR	
	SCN	
	SLCB	
	THEF	
1N6051A	△♦GSE	331 - 92
	CEN	
	♦MSC	
	SAR	
	SCN	
	SLCB	
	THEF	
1N6052	△♦GSE	331 - 93

cont.next page

△-Registered with JEDEC by this manufacturer

♦-Mfr's data sheet available in microfilm service

1. TYPE No. CROSS INDEX

IN TYPE NUMBER SEQUENCE

TYPE No.	MFRS	Pg&Line
1N6052		
(cont.)	CEN	
	CRI	♦MSC
	SAR	SCN
	SLCB	THEF
1N6052A	Δ♦GSE	331 - 94
	CEN	♦MSC
	SAR	SCN
	SLCB	THEF
1N6053	Δ♦GSE	331 - 95
	CEN	CRI
	♦MSC	SAR
	SCN	SLCB
		THEF
1N6053A	Δ♦GSE	331 - 96
	CEN	♦MSC
	SAR	SCN
	SLCB	THEF
1N6054	Δ♦GSE	331 - 97
	CEN	CRI
	♦MSC	SAR
	SCN	SLCB
		THEF
1N6054A	Δ♦GSE	331 - 98
	CEN	♦MSC
	SAR	SCN
	SLCB	THEF
1N6055	Δ♦GSE	331 - 99
	CEN	♦MSC
	SAR	SCN
	SLCB	THEF
1N6055A	Δ♦GSE	331 -100
	CEN	♦MSC
	SAR	SCN
	SLCB	THEF
1N6056	Δ♦GSE	331 -101
	♦MSC	SAR
	SCN	SLCB
		THEF
1N6056A	Δ♦GSE	331 -102
	♦MSC	SAR
	SCN	SLCB
		THEF
1N6057	Δ♦GSE	331 -103
	♦MSC	SAR
	SCN	SLCB
		THEF
1N6057A	Δ♦GSE	331 -104
	♦MSC	SAR
	SCN	SLCB
		THEF
1N6058	Δ♦GSE	331 -105
	♦MSC	SAR
	SCN	SLCB
		THEF
1N6058A	Δ♦GSE	331 -106
	♦MSC	SAR
	SCN	SLCB
		THEF
1N6059	Δ♦GSE	331 -107
	♦MSC	SAR
	SCN	SLCB
		THEF
1N6059A	Δ♦GSE	331 -108
	♦MSC	SAR
	SCN	SLCB
		THEF
1N6060	Δ♦GSE	331 -109
	CRI	♦MSC
	SAR	SCN
	SLCB	THEF
1N6060A	Δ♦GSE	331 -110
	♦MSC	SAR
	SCN	SLCB
		THEF
1N6061	Δ♦GSE	332 - 1
	♦MSC	SAR
	SCN	SLCB
		THEF
1N6061A	Δ♦GSE	332 - 2
	♦MSC	SAR
	SCN	SLCB
		THEF
1N6062	Δ♦GSE	332 - 3
	♦MSC	SAR
	SCN	SLCB
		THEF
1N6062A	Δ♦GSE	332 - 4
	♦MSC	SAR
	SCN	SLCB
		THEF
1N6063	Δ♦GSE	332 - 5
	CRI	♦MSC
	SAR	SCN
	SLCB	THEF
1N6063A	Δ♦GSE	332 - 6
	♦MSC	SAR
	SCN	SLCB
		THEF
1N6064	Δ♦GSE	332 - 7
	♦MSC	SAR
	SCN	SLCB
		THEF
1N6064A	Δ♦GSE	332 - 8
	♦MSC	SAR
	SCN	SLCB
		THEF
1N6065	Δ♦GSE	332 - 9
	♦MSC	SAR
	SCN	SLCB
		THEF
1N6065A	Δ♦GSE	332 - 10
	♦MSC	SAR
cont.next col.		

TYPE No.	MFRS	Pg&Line
1N6065A		
(cont.)	SCN	
	SLCB	THEF
1N6066	Δ♦GSE	332 - 11
	CEN	♦MSC
	SAR	SCN
	SLCB	THEF
1N6066A	Δ♦GSE	332 - 12
	CEN	♦MSC
	SAR	SCN
	SLCB	THEF
1N6067	Δ♦GSE	332 - 13
	CEN	♦MSC
	SAR	SCN
	SLCB	♦THEF
1N6067A	Δ♦GSE	332 - 14
	CEN	♦MSC
	SAR	SCN
	SLCB	THEF
1N6068	Δ♦GSE	332 - 15
	CEN	CRI
	♦MSC	SAR
	SCN	SLCB
		THEF
1N6068A	Δ♦GSE	332 - 16
	CEN	♦MSC
	SAR	SCN
	SLCB	THEF
1N6069	Δ♦GSE	332 - 17
	CEN	♦MSC
	SAR	SCN
	SLCB	THEF
1N6069A	Δ♦GSE	332 - 18
	CEN	♦MSC
	SAR	SCN
	SLCB	THEF
1N6070	Δ♦GSE	332 - 19
	CEN	♦MSC
	SAR	SCN
	SLCB	THEF
1N6070A	Δ♦GSE	332 - 20
	CEN	♦MSC
	SAR	SCN
	SLCB	THEF
1N6071	Δ♦GSE	332 - 21
	CEN	♦MSC
	SAR	SCN
	SLCB	THEF
1N6071A	Δ♦GSE	332 - 22
	CEN	♦MSC
	SAR	SCN
	SLCB	THEF
1N6072	Δ♦GSE	332 - 23
	CEN	♦MSC
	SAR	SCN
	SLCB	SPE
		THEF
1N6072A	Δ♦GSE	332 - 24
	CEN	♦MSC
	SAR	SCN
	SLCB	THEF
1N6073	CRI	252 - 25
		♦MSC
1N6074	Δ♦SET	252 -210
	DIT	♦MSC
1N6075	Δ♦SET	253 -177
	DIT	♦MSC
1N6076	DIT	252 - 26
	♦MSC	SSI
1N6077	♦MSC	252 -211
		SSI
1N6078	DIT	253 -178
	♦MSC	SSI
1N6079	DIT	252 - 27
	♦MSC	SEN
1N6080	ΔSET	252 -212
	DIT	♦MSC
		SEN
1N6081	ΔSET	253 -179
	DIT	♦MSC
		SEN
1N6082	ΔTRWS	168 -185
	APD	CODI
	CRI	EAS
	GHZ	KSI
		MSC
1N6082A	ΔTRWS	168 -179
	APD	CODI
	CRI	GHZ
	KSI	MSC
1N6082B	ΔTRWS	168 -158
	APD	CODI
	CRI	GHZ
	KSI	MSC
1N6082C	ΔTRWS	168 -149
	APD	CODI
	CRI	GHZ
	KSI	MSC
1N6082D	ΔTRWS	168 -143
	APD	CODI
	CRI	GHZ
		KSI
1N6083	ΔTRWS	170 - 24
	APD	CODI
	CRI	EAS
	GHZ	KSI
		MSC
1N6083A	ΔTRWS	170 - 17
	APD	CODI
	CRI	GHZ
	KSI	MSC
1N6083B	ΔTRWS	169 -199
	APD	CODI
cont.next col.		

TYPE No.	MFRS	Pg&Line
1N6083B		
(cont.)	CRI	
	GHZ	KSI
		MSC
1N6083C	ΔTRWS	169 -187
	APD	CODI
	CRI	GHZ
	KSI	MSC
1N6083D	ΔTRWS	169 -181
	APD	CODI
	CRI	GHZ
		KSI
1N6084	ΔTRWS	171 -106
	APD	CODI
	CRI	EAS
	GHZ	KSI
		MSC
1N6084A	ΔTRWS	171 - 99
	APD	CODI
	CRI	GHZ
	KSI	MSC
1N6084B	ΔTRWS	171 - 74
	APD	CODI
	CRI	GHZ
	KSI	MSC
1N6084C	ΔTRWS	171 - 63
	APD	CODI
	CRI	GHZ
	KSI	MSC
1N6084D	ΔTRWS	171 - 57
	APD	CODI
	CRI	GHZ
		KSI
1N6085	ΔTRWS	172 -195
	APD	CODI
	CRI	EAS
	GHZ	KSI
		MSC
1N6085A	ΔTRWS	172 -189
	APD	CODI
	CRI	GHZ
	KSI	MSC
1N6085B	ΔTRWS	172 -162
	APD	CODI
	CRI	GHZ
	KSI	MSC
1N6085C	ΔTRWS	172 -145
	APD	CODI
	CRI	GHZ
	KSI	MSC
1N6085D	ΔTRWS	172 -137
	APD	CODI
	CRI	GHZ
		KSI
1N6086	ΔTRWS	175 - 47
	APD	CODI
	CRI	EAS
	GHZ	KSI
		MSC
1N6086A	ΔTRWS	175 - 41
	APD	CODI
	CRI	GHZ
	KSI	MSC
1N6086B	ΔTRWS	174 -180
	APD	CODI
	CRI	GHZ
	KSI	MSC
1N6086C	ΔTRWS	174 -158
	APD	CODI
	CRI	♦GHZ
	KSI	MSC
1N6086D	ΔTRWS	174 -149
	APD	CODI
	CRI	GHZ
		KSI
1N6087	ΔTRWS	178 - 16
	APD	CODI
	CRI	EAS
	GHZ	KSI
		MSC
1N6087A	ΔTRWS	178 - 11
	APD	CODI
	CRI	GHZ
	KSI	MSC
1N6087B	ΔTRWS	177 -200
	APD	CODI
	CRI	GHZ
	KSI	MSC
1N6087C	ΔTRWS	177 -183
	APD	CODI
	CRI	GHZ
	KSI	MSC
1N6087D	ΔTRWS	177 -174
	APD	CODI
	CRI	GHZ
		KSI
1N6088	ΔTRWS	180 - 14
	APD	CODI
	CRI	EAS
	GHZ	KSI
		MSC
1N6088A	ΔTRWS	180 - 8
	APD	CODI
	CRI	GHZ
	KSI	MSC
1N6088B	ΔTRWS	179 -186
	APD	CODI
	GHZ	KSI
		MSC
1N6088C	ΔTRWS	179 -174
	APD	CODI
	GHZ	KSI
		MSC

TYPE No.	MFRS	Pg&Line
1N6088D	ΔTRWS	179 -168
	APD	CODI
	GHZ	KSI
1N6089	ΔTRWS	181 -198
	APD	CODI
	EAS	GHZ
	KSI	MSC
1N6089A	ΔTRWS	181 -191
	APD	CODI
	GHZ	KSI
		MSC
1N6089B	ΔTRWS	181 -166
	APD	CODI
	GHZ	KSI
		MSC
1N6089C	ΔTRWS	181 -155
	APD	CODI
	GHZ	KSI
		MSC
1N6089D	ΔTRWS	181 -149
	APD	CODI
	GHZ	KSI
1N6090	ΔTRWS	185 - 28
	APD	CODI
	EAS	GHZ
	KSI	MSC
1N6090A	ΔTRWS	185 - 23
	APD	CODI
	GHZ	KSI
		MSC
1N6090B	ΔTRWS	184 -214
	APD	CODI
	GHZ	KSI
		MSC
1N6090C	ΔTRWS	184 -202
	APD	CODI
	GHZ	KSI
		MSC
1N6090D	ΔTRWS	184 -196
	APD	CODI
	GHZ	KSI
1N6091	ΔTRWS	187 - 73
	APD	CODI
	EAS	GHZ
	KSI	MSC
1N6091A	ΔTRWS	187 - 67
	APD	CODI
	GHZ	KSI
1N6091B	ΔTRWS	187 - 40
	APD	CODI
	GHZ	KSI
1N6091C	ΔTRWS	187 - 28
	APD	CODI
	GHZ	KSI
1N6091D	ΔTRWS	187 - 21
	APD	CODI
	GHZ	KSI
1N6095	Δ♦TRWS	298 - 93
	CEN	COO
	♦DII	DIT
	GTC	INR
	INRJ	♦MOTA
	NJS	SOD
	SSI	TRWO
		♦UNI
1N6096	Δ♦TRWS	298 -100
	CEN	COO
	♦DII	DIT
	GTC	INR
	INRJ	♦MOTA
	NJS	♦SOD
	SSI	TRWO
		♦UNI
1N6097	Δ♦TRWS	302 -114
	CEN	COO
	♦DII	♦DIT
	GTC	INR
	INRJ	♦MOTA
	NJS	♦SOD
	SSI	TRWO
		♦UNI
1N6098	Δ♦TRWS	302 -118
	CEN	COO
	♦DII	♦DIT
	GTC	INR
	INRJ	♦MOTA
	NJS	♦SOD
	SSI	TRWO
		♦UNI
1N6099	ΔFSC	247 -100
1N6102	MSC	332 - 25
		♦THEF
1N6102A	♦MSC	332 - 26
	♦THEF	
1N6103	MSC	332 - 27
	♦THEF	
1N6103A	♦MSC	332 - 28
	♦THEF	
1N6104	MSC	332 - 29
	♦THEF	
1N6104A	♦MSC	332 - 30
	♦THEF	
1N6105	MSC	332 - 31
	♦THEF	
1N6105A	♦MSC	332 - 32
	♦THEF	
1N6106	MSC	332 - 33
	♦THEF	
1N6106A	♦MSC	332 - 34
	♦THEF	
1N6107	MSC	332 - 35
	♦THEF	
1N6107A	♦MSC	332 - 36
	♦THEF	

TYPE No.	MFRS	Pg&Line
1N6108	MSC	332 - 37
	♦THEF	
1N6108A	♦MSC	332 - 38
	♦THEF	
1N6109	MSC	332 - 39
	♦THEF	
1N6109A	♦MSC	332 - 40
	♦THEF	
1N6110	MSC	332 - 41
	♦THEF	
1N6110A	♦MSC	332 - 42
	♦THEF	
1N6111	MSC	332 - 43
	♦THEF	
1N6111A	♦MSC	332 - 44
	♦THEF	
1N6112	MSC	332 - 45
	♦THEF	
1N6112A	♦MSC	332 - 46
	♦THEF	
1N6113	MSC	332 - 47
	♦THEF	
1N6113A	♦MSC	332 - 48
	♦THEF	
1N6114	MSC	332 - 49
	♦THEF	
1N6114A	♦MSC	332 - 50
	♦THEF	
1N6115	MSC	332 - 51
	♦THEF	
1N6115A	♦MSC	332 - 52
	♦THEF	
1N6116	MSC	332 - 53
	♦THEF	
1N6116A	♦MSC	332 - 54
	♦THEF	
1N6117	MSC	332 - 55
	♦THEF	
1N6117A	♦MSC	332 - 56
	♦THEF	
1N6118	MSC	332 - 57
	♦THEF	
1N6118A	♦MSC	332 - 58
	♦THEF	
1N6119	MSC	332 - 59
	♦THEF	
1N6119A	♦MSC	332 - 60
	♦THEF	
1N6120	MSC	332 - 61
	♦THEF	
1N6120A	♦MSC	332 - 62
	♦THEF	
1N6121	MSC	332 - 63
	♦THEF	
1N6121A	♦MSC	332 - 64
	♦THEF	
1N6122	MSC	332 - 65
	♦THEF	
1N6122A	♦MSC	332 - 66
	♦THEF	
1N6123	MSC	332 - 67
	♦THEF	
1N6123A	♦MSC	332 - 68
	♦THEF	
1N6124	MSC	332 - 69
	♦THEF	
1N6124A	♦MSC	332 - 70
	♦THEF	
1N6125	MSC	332 - 71
	♦THEF	
1N6125A	♦MSC	332 - 72
	♦THEF	
1N6126	MSC	332 - 73
	♦THEF	
1N6126A	♦MSC	332 - 74
	♦THEF	
1N6127	MSC	332 - 75
	♦THEF	
1N6127A	♦MSC	332 - 76
	♦THEF	
1N6128	MSC	332 - 77
	♦THEF	
1N6128A	♦MSC	332 - 78
	♦THEF	
1N6129	MSC	332 - 79
	♦THEF	
1N6129A	♦MSC	332 - 80
	♦THEF	
1N6130	MSC	332 - 81
	♦THEF	
1N6130A	♦MSC	332 - 82
	♦THEF	
1N6131	MSC	332 - 83
	♦THEF	
1N6131A	♦MSC	332 - 84
	♦THEF	
1N6132	MSC	332 - 85
	♦THEF	
1N6132A	♦MSC	332 - 86
	♦THEF	
1N6133	MSC	332 - 87
	♦THEF	
1N6133A	♦MSC	332 - 88
	♦THEF	
1N6134	MSC	332 - 89
	♦THEF	
1N6134A	♦MSC	332 - 90
	♦THEF	
1N6135	MSC	332 - 91
	♦THEF	
1N6135A	♦MSC	332 - 92
	♦THEF	
1N6136	MSC	332 - 93
	♦THEF	

Δ-Registered with JEDEC by this manufacturer

♦-Mfr's data sheet available in microfilm service

1. TYPE No. CROSS INDEX

IN TYPE NUMBER SEQUENCE

TYPE No.	MFRS	Pg&Line
1N6136A	♦MSC	332 - 94
	♦THEF	
1N6137	MSC	332 - 95
	♦THEF	
1N6137A	♦MSC	332 - 96
	♦THEF	
1N6139	MSC	332 - 97
	♦THEF	
1N6139A	♦MSC	332 - 98
	♦THEF	
1N6140	MSC	332 - 99
	♦THEF	
1N6140A	♦MSC	332 -100
	♦THEF	
1N6141	MSC	332 -101
	♦THEF	
1N6141A	♦MSC	332 -102
	♦THEF	
1N6142	MSC	332 -103
	♦THEF	
1N6142A	♦MSC	332 -104
	♦THEF	
1N6143	MSC	332 -105
	♦THEF	
1N6143A	♦MSC	332 -106
	♦THEF	
1N6144	MSC	332 -107
	♦THEF	
1N6144A	♦MSC	332 -108
	♦THEF	
1N6145	MSC	332 -109
	♦THEF	
1N6145A	♦MSC	332 -110
	♦THEF	
1N6146	MSC	333 - 1
	♦THEF	
1N6146A	♦MSC	333 - 2
	♦THEF	
1N6147	MSC	333 - 3
SPE	♦THEF	
1N6147A	♦MSC	333 - 4
	♦THEF	
1N6148	MSC	333 - 5
	♦THEF	
1N6148A	♦MSC	333 - 6
	♦THEF	
1N6149	MSC	333 - 7
	♦THEF	
1N6149A	♦MSC	333 - 8
	♦THEF	
1N6150	MSC	333 - 9
	♦THEF	
1N6150A	♦MSC	333 - 10
	♦THEF	
1N6151	MSC	333 - 11
	♦THEF	
1N6151A	♦MSC	333 - 12
	♦THEF	
1N6152	MSC	333 - 13
	♦THEF	
1N6152A	♦MSC	333 - 14
	♦THEF	
1N6153	MSC	333 - 15
	♦THEF	
1N6153A	♦MSC	333 - 16
	♦THEF	
1N6154	MSC	333 - 17
	♦THEF	
1N6154A	♦MSC	333 - 18
	♦THEF	
1N6155	MSC	333 - 19
	♦THEF	
1N6155A	♦MSC	333 - 20
	♦THEF	
1N6156	MSC	333 - 21
	♦THEF	
1N6156A	♦MSC	333 - 22
	♦THEF	
1N6157	MSC	333 - 23
	♦THEF	
1N6157A	♦MSC	333 - 24
	♦THEF	
1N6158	MSC	333 - 25
	♦THEF	
1N6158A	♦MSC	333 - 26
	♦THEF	
1N6159	MSC	333 - 27
	♦THEF	
1N6159A	♦MSC	333 - 28
	♦THEF	
1N6160	MSC	333 - 29
	♦THEF	
1N6160A	♦MSC	333 - 30
	♦THEF	
1N6161	MSC	333 - 31
	♦THEF	
1N6161A	♦MSC	333 - 32
	♦THEF	
1N6162	MSC	333 - 33
	♦THEF	
1N6162A	♦MSC	333 - 34
	♦THEF	
1N6163	MSC	333 - 35
	♦THEF	
1N6163A	♦MSC	333 - 36
	♦THEF	
1N6164	MSC	333 - 37
	♦THEF	
1N6164A	♦MSC	333 - 38
	♦THEF	
1N6165	MSC	333 - 39
	♦THEF	
1N6165A	♦MSC	333 - 40
	♦THEF	
1N6166	MSC	333 - 41
	♦THEF	
1N6166A	♦MSC	333 - 42
	♦THEF	
1N6167	MSC	333 - 43
	♦THEF	
1N6167A	♦MSC	333 - 44
	♦THEF	
1N6168	MSC	333 - 45
	♦THEF	
1N6168A	♦MSC	333 - 46
	♦THEF	
1N6169	MSC	333 - 47
	♦THEF	
1N6169A	♦MSC	333 - 48
	♦THEF	
1N6170	MSC	333 - 49
	♦THEF	
1N6170A	♦MSC	333 - 50
	♦THEF	
1N6171	MSC	333 - 51
	♦THEF	
1N6171A	♦MSC	333 - 52
	♦THEF	
1N6172	MSC	333 - 53
	♦THEF	
1N6172A	♦MSC	333 - 54
	♦THEF	
1N6173	MSC	333 - 55
	♦THEF	
1N6173A	♦MSC	333 - 56
	♦THEF	
1N6262	ΔCOO	305 - 78
1N6263	Δ ♦HPA	231 -133
SPE	THEF	
1N6267	ΔGSE	333 - 57
CEN	♦MOTA	
♦MSC	NJS	
SCN	SLCB	
1N6267A	ΔGSE	333 - 58
CEN	♦MOTA	
♦MSC	NJS	
SCN	SLCB	
1N6268	ΔGSE	333 - 59
CEN	♦MOTA	
♦MSC	NJS	
SCN	SLCB	
1N6268A	ΔGSE	333 - 60
CEN	♦MOTA	
♦MSC	NJS	
SCN	SLCB	
1N6269	ΔGSE	333 - 61
CEN	FGRS	
♦MOTA	♦MSC	
NJS	SCN	
	SLCB	
1N6269A	ΔGSE	333 - 62
CEN	♦MOTA	
♦MSC	NJS	
SCN	SLCB	
1N6270	ΔGSE	333 - 63
CEN	FGRS	
♦MOTA	♦MSC	
NJS	SCN	
	SLCB	
1N6270A	ΔGSE	333 - 64
CEN	♦MOTA	
♦MSC	NJS	
SCN	SLCB	
1N6271	ΔGSE	333 - 65
CEN	FGRS	
♦MOTA	♦MSC	
NJS	SCN	
	SLCB	
1N6271A	ΔGSE	333 - 66
CEN	♦MOTA	
♦MSC	NJS	
SCN	SLCB	
1N6272	ΔGSE	333 - 67
CEN	FGRS	
♦MOTA	♦MSC	
NJS	SCN	
	SLCB	
1N6272A	ΔGSE	333 - 68
CEN	♦MOTA	
♦MSC	NJS	
SCN	SLCB	
1N6273	ΔGSE	333 - 69
CEN	FGRS	
♦MOTA	♦MSC	
NJS	SCN	
	SLCB	
1N6273A	ΔGSE	333 - 70
CEN	♦MOTA	
♦MSC	NJS	
SCN	SLCB	
1N6274	ΔGSE	333 - 71
CEN	FGRS	
♦MOTA	♦MSC	
NJS	SCN	
	SLCB	
1N6274A	ΔGSE	333 - 72
CEN	♦MOTA	
♦MSC	NJS	
SCN	SLCB	
1N6275	ΔGSE	333 - 73
CEN	FGRS	
♦MOTA	♦MSC	
NJS	SCN	
	SLCB	
1N6275A	ΔGSE	333 - 74
CEN	♦MOTA	
♦MSC	NJS	
SCN	SLCB	
1N6276	ΔGSE	333 - 75
CEN	FGRS	
♦MOTA	♦MSC	
NJS	SCN	
	SLCB	
1N6276A	ΔGSE	333 - 76
CEN	♦MOTA	
♦MSC	NJS	
SCN	SLCB	
1N6277	ΔGSE	333 - 77
CEN	FGRS	
♦MOTA	♦MSC	
NJS	SCN	
	SLCB	
1N6277A	ΔGSE	333 - 78
CEN	♦MOTA	
♦MSC	NJS	
SCN	SLCB	
1N6278	ΔGSE	333 - 79
CEN	FGRS	
♦MOTA	♦MSC	
NJS	SCN	
	SLCB	
1N6278A	ΔGSE	333 - 80
CEN	♦MOTA	
♦MSC	NJS	
SCN	SLCB	
1N6279	ΔGSE	333 - 81
CEN	FGRS	
♦MOTA	♦MSC	
NJS	SCN	
	SLCB	
1N6279A	ΔGSE	333 - 82
CEN	♦MOTA	
♦MSC	NJS	
SCN	SLCB	
1N6280	ΔGSE	333 - 83
CEN	FGRS	
♦MOTA	♦MSC	
NJS	SCN	
	SLCB	
1N6280A	ΔGSE	333 - 84
CEN	♦MOTA	
♦MSC	NJS	
SCN	SLCB	
1N6281	ΔGSE	333 - 85
CEN	FGRS	
♦MOTA	♦MSC	
NJS	SCN	
	SLCB	
1N6281A	ΔGSE	333 - 86
CEN	♦MOTA	
♦MSC	NJS	
SCN	SLCB	
1N6282	ΔGSE	333 - 87
CEN	FGRS	
♦MOTA	♦MSC	
NJS	SCN	
	SLCB	
1N6282A	ΔGSE	333 - 88
CEN	♦MOTA	
♦MSC	NJS	
SCN	SLCB	
1N6283	ΔGSE	333 - 89
CEN	FGRS	
♦MOTA	♦MSC	
NJS	SCN	
	SLCB	
1N6283A	ΔGSE	333 - 90
CEN	♦MOTA	
♦MSC	NJS	
SCN	SLCB	
1N6284	ΔGSE	333 - 91
CEN	♦FGRS	
♦MOTA	♦MSC	
NJS	SCN	
	SLCB	
1N6284A	ΔGSE	333 - 92
CEN	♦MOTA	
♦MSC	NJS	
SCN	SLCB	
1N6285	ΔGSE	333 - 93
CEN	♦FGRS	
♦MOTA	♦MSC	
NJS	SCN	
	SLCB	
1N6285A	ΔGSE	333 - 94
CEN	♦MOTA	
♦MSC	NJS	
SCN	SLCB	
1N6286	ΔGSE	333 - 95
CEN	♦FGRS	
♦MOTA	♦MSC	
NJS	SCN	
	SLCB	
1N6286A	ΔGSE	333 - 96
CEN	♦MOTA	
♦MSC	NJS	
SCN	SLCB	
1N6287	ΔGSE	333 - 97
CEN	♦FGRS	
♦MOTA	♦MSC	
NJS	SCN	
	SLCB	
1N6287A	ΔGSE	333 - 98
CEN	♦MOTA	
♦MSC	NJS	
SCN	SLCB	
1N6288	ΔGSE	333 - 99
CEN	♦FGRS	
♦MOTA	♦MSC	
NJS	SCN	
	SLCB	
1N6288A	ΔGSE	333 -100
CEN	♦MOTA	
♦MSC	NJS	
SCN	SLCB	
1N6289	ΔGSE	333 -101
CEN	♦FGRS	
♦MOTA	♦MSC	
NJS	SCN	
	SLCB	
1N6289A	ΔGSE	333 -102
CEN	♦MOTA	
♦MSC	NJS	
SCN	SLCB	
1N6290	ΔGSE	333 -103
CEN	♦FGRS	
♦MOTA	♦MSC	
SCN	SLCB	
1N6290A	ΔGSE	333 -104
CEN	♦MOTA	
♦MSC	SCN	
	SLCB	
1N6291	ΔGSE	333 -105
CEN	♦FGRS	
♦MOTA	♦MSC	
SCN	SLCB	
1N6291A	ΔGSE	333 -106
CEN	♦MOTA	
♦MSC	SCN	
	SLCB	
1N6292	ΔGSE	333 -107
CEN	♦FGRS	
♦MOTA	♦MSC	
SCN	SLCB	
1N6292A	ΔGSE	333 -108
CEN	♦MOTA	
♦MSC	SCN	
	SLCB	
1N6293	ΔGSE	333 -109
CEN	♦FGRS	
♦MOTA	♦MSC	
SCN	SLCB	
1N6293A	ΔGSE	333 -110
CEN	♦MOTA	
♦MSC	SCN	
	SLCB	
1N6294	ΔGSE	334 - 1
CEN	♦FGRS	
♦MOTA	♦MSC	
SCN	SLCB	
1N6294A	ΔGSE	334 - 2
CEN	MOTA	
♦MSC	SCN	
	SLCB	
1N6295	ΔGSE	334 - 3
CEN	♦FGRS	
♦MOTA	♦MSC	
NJS	SCN	
	SLCB	
1N6295A	ΔGSE	334 - 4
CEN	♦MOTA	
♦MSC	NJS	
SCN	SLCB	
1N6296	ΔGSE	334 - 5
CEN	♦FGRS	
♦MOTA	♦MSC	
NJS	SCN	
	SLCB	
1N6296A	ΔGSE	334 - 6
CEN	♦MOTA	
♦MSC	NJS	
SCN	SLCB	
1N6297	ΔGSE	334 - 7
CEN	♦FGRS	
♦MOTA	♦MSC	
NJS	SCN	
	SLCB	
1N6297A	ΔGSE	334 - 8
CEN	♦MOTA	
♦MSC	NJS	
SCN	SLCB	
1N6298	ΔGSE	334 - 9
CEN	♦FGRS	
♦MOTA	♦MSC	
NJS	SCN	
	SLCB	
1N6298A	ΔGSE	334 - 10
CEN	♦MOTA	
♦MSC	NJS	
SCN	SLCB	
1N6299	ΔGSE	334 - 11
CEN	♦FGRS	
♦MOTA	♦MSC	
NJS	SCN	
	SLCB	
1N6299A	ΔGSE	334 - 12
CEN	♦MOTA	
♦MSC	NJS	
SCN	SLCB	
1N6300	ΔGSE	334 - 13
CEN	♦FGRS	
♦MOTA	♦MSC	
NJS	SCN	
	SLCB	
1N6300A	ΔGSE	334 - 14
CEN	♦MOTA	
♦MSC	NJS	
SCN	SLCB	
1N6301	ΔGSE	334 - 15
CEN	♦FGRS	
♦MOTA	♦MSC	
NJS	SCN	
	SLCB	
1N6301A	ΔGSE	334 - 16
cont.next col.		
1N6301A		
(cont.)	CEN	
♦MOTA	♦MSC	
NJS	SCN	
	SLCB	
1N6302	ΔGSE	334 - 17
CEN	♦FGRS	
♦MOTA	♦MSC	
NJS	SCN	
	SLCB	
1N6302A	ΔGSE	334 - 18
CEN	♦MOTA	
♦MSC	NJS	
SCN	SLCB	
1N6303	ΔGSE	334 - 19
♦FGRS	♦MOTA	
♦MSC	NJS	
SCN	SLCB	
1N6303A	ΔGSE	334 - 20
♦MOTA	♦MSC	
NJS	SCN	
	SLCB	
1N6309	CDI	334 - 21
	♦MSC	
1N6310	CDI	334 - 22
	♦MSC	
1N6311	CDI	334 - 23
	♦MSC	
1N6312	CDI	334 - 24
	♦MSC	
1N6314	CDI	334 - 25
	♦MSC	
1N6315	CDI	444 - 3
	♦MSC	
1N6316	CDI	334 - 26
	♦MSC	
1N6317	CDI	334 - 27
	♦MSC	
1N6318	CDI	334 - 28
	♦MSC	
1N6319	CDI	334 - 29
	♦MSC	
1N6320	CDI	334 - 30
	♦MSC	
1N6323	CDI	334 - 31
	♦MSC	
1N6324	CDI	334 - 32
	♦MSC	
1N6325	CDI	334 - 33
	♦MSC	
1N6326	CDI	334 - 34
	♦MSC	
1N6327	CDI	334 - 35
	♦MSC	
1N6328	CDI	334 - 36
	♦MSC	
1N6329	CDI	334 - 37
	♦MSC	
1N6330	CDI	334 - 38
	♦MSC	
1N6331	CDI	334 - 39
1N6391	♦INR	374 -216
1N6402	ΔGSE	334 - 40
1N6402A	ΔGSE	334 - 41
1N6403	ΔGSE	334 - 42
1N6403A	ΔGSE	334 - 43
1N6404	ΔGSE	334 - 44
1N6404A	ΔGSE	334 - 45
1N6405	ΔGSE	334 - 46
1N6405A	ΔGSE	334 - 47
1N6406	ΔGSE	334 - 48
1N6406A	ΔGSE	334 - 49
1N6407	ΔGSE	334 - 50
1N6407A	ΔGSE	334 - 51
1N6408	ΔGSE	334 - 52
1N6408A	ΔGSE	334 - 53
1N6409	ΔGSE	334 - 54
1N6409A	ΔGSE	334 - 55
1N6410	ΔGSE	334 - 56
1N6410A	ΔGSE	334 - 57
1N6411	ΔGSE	334 - 58
1N6411A	ΔGSE	334 - 59
1N6412	ΔGSE	334 - 60
1N6412A	ΔGSE	334 - 61
1N6413	ΔGSE	334 - 62
1N6413A	ΔGSE	334 - 63
1N6414	ΔGSE	334 - 64
1N6414A	ΔGSE	334 - 65
1N6415	ΔGSE	334 - 66
1N6415A	ΔGSE	334 - 67
1N6416	ΔGSE	334 - 68
1N6416A	GSE	334 - 69
1N6417	ΔGSE	334 - 70
1N6417A	ΔGSE	334 - 71
1N6418	ΔGSE	334 - 72
1N6418A	ΔGSE	334 - 73
1N6419	ΔGSE	334 - 74
1N6419A	ΔGSE	334 - 75
1N6420	ΔGSE	334 - 76
1N6420A	ΔGSE	334 - 77
1N6421	ΔGSE	334 - 78
1N6421A	ΔGSE	334 - 79
1N6422	ΔGSE	334 - 80
1N6422A	ΔGSE	334 - 81
1N6423	ΔGSE	334 - 82
1N6423A	ΔGSE	334 - 83
1N6424	ΔGSE	334 - 84
1N6424A	ΔGSE	334 - 85
1N6425	ΔGSE	334 - 86
1N6425A	GSE	334 - 87
1N6426	ΔGSE	334 - 88
1N6426A	ΔGSE	334 - 89
1N6427	ΔGSE	334 - 90
1N6427A	ΔGSE	334 - 91

Δ-Registered with JEDEC by this manufacturer

♦-Mfr's data sheet available in microfilm service

1. TYPE No. CROSS INDEX

IN TYPE NUMBER SEQUENCE

TYPE No.	MFRS	Pg&Line
1N6428	ΔGSE	334 - 92
1N6428A	ΔGSE	334 - 93
1N6429	ΔGSE	334 - 94
1N6429A	ΔGSE	334 - 95
1N6430	ΔGSE	334 - 96
1N6430A	ΔGSE	334 - 97
1N6431	ΔGSE	334 - 98
1N6431A	ΔGSE	334 - 99
1N6438	ΔGSE	334 -100
1N6438A	ΔGSE	334 -101
1N6439	ΔGSE	334 -102
1N6439A	ΔGSE	334 -103
1N6440	ΔGSE	334 -104
1N6440A	ΔGSE	334 -105
1N6441	ΔGSE	334 -106
1N6441A	ΔGSE	334 -107
1N6442	ΔGSE	334 -108
1N6442A	ΔGSE	334 -109
1N6443	ΔGSE	334 -110
1N6443A	ΔGSE	335 - 1
1N6444	ΔGSE	335 - 2
1N6445	ΔGSE	335 - 3
1N6445A	ΔGSE	335 - 4
1N6446	ΔGSE	335 - 5
1N6446A	ΔGSE	335 - 6
1N6447	ΔGSE	335 - 7
1N6447A	ΔGSE	335 - 8
1N6448	ΔGSE	335 - 9
1N6448A	ΔGSE	335 - 10
1N6449	ΔGSE	335 - 11
1N6449A	ΔGSE	335 - 12
1N6450	ΔGSE	335 - 13
1N6450A	ΔGSE	335 - 14
1N6451A	ΔGSE	335 - 15
1N6452	ΔGSE	335 - 16
1N6452A	ΔGSE	335 - 17
1N6453	ΔGSE	335 - 18
1N6453A	ΔGSE	335 - 19
1N6454	ΔGSE	335 - 20
1N6454A	ΔGSE	335 - 21
1N6455A	ΔGSE	335 - 22
1N6456	ΔGSE	335 - 23
1N6456A	ΔGSE	335 - 24
1NE11	TOSJ	401 -180
1NZ61	TOSJ	402 - 1
1P643	♦FGRS	238 - 74
	♦ITTG	
1P644	♦FGRS	238 -142
	♦ITTG	
1P645	♦FGRS	239 -102
	♦ITTG	
1P646	♦FGRS	239 -108
	♦ITTG	
1P647	♦FGRS	239 -137
	♦ITTG	
1P648	♦FGRS	239 -197
1P649	♦ITTG	276 -107
1QE11	TOSJ	406 - 53
1R5BZ61	♦TOSJ	283 -175
1R5DZ61	♦TOSJ	284 - 23
1R5GZ61	♦TOSJ	284 -130
1R5JZ61	♦TOSJ	285 - 9
1R5TH61	♦TOSJ	248 -154
1R61	IMTM	291 -141
1R62	IMTM	291 -193
1RM40	♦THEF	421 -199
1RM60	♦THEF	424 -199
1RM80	♦THEF	426 - 69
1RM100	♦THEF	427 -109
1RM120	♦THEF	428 -104
1RM150	♦THEF	429 - 80
1RM200	♦THEF	430 -164
1RM250	♦THEF	431 -126
1S030	SLCB	277 -212
1S031	SLCB	278 - 25
1S032	SLCB	278 - 65
1S32	CEI	232 -213
HSE	IMTM	
	TOSJ	
1S33	CEI	232 -214
HSE	IMTM	
	TOSJ	
1S034	SLCB	278 -147
1S34	CEI	232 -215
HSE	IMTM	
	♦TOSJ	
1S036	SLCB	278 -218
1S038	SLCB	279 - 44
1S40	CEI	278 - 26
	HSE	
1S41	CEI	278 - 66
	HSE	
1S42	CEI	278 -109
	HSE	
1S43	CEI	278 -148
	HSE	
1S45	CEI	278 -219
	HSE	
1S84H	♦CEI	249 -123
1S102	SLCB	279 -188
1S104	SLCB	279 -189
1S106	SLCB	279 -128
1S108	SLCB	279 - 65
1S111	SLCB	276 - 77
1S113	SLCB	276 - 92
1S115	SLCB	276 -106
1S117	SLCB	276 -111
1S120	SLCB	275 - 32
1S121	SLCB	275 - 62
1S130	SLCB	235 -177
1S131	SLCB	235 -178
1S132	SLCB	235 -179
1S134	SLCB	235 -180
1S136	SLCB	235 -181
1S138	SLCB	235 -182
1S144	IMTM	445 - 7
	TOSJ	
1S180	CEI	231 -206
	HSE	
1S181	CEI	231 -207
	HSE	
1S188	TSAJ	233 -111
1S206	MITJ	274 -161
1S220	♦TOSJ	169 -116
1S221	♦TOSJ	172 - 82
1S222	♦TOSJ	177 - 72
1S223	♦TOSJ	180 -127
1S224	♦TOSJ	183 -104
1S225	♦TOSJ	186 -111
1S226	♦TOSJ	189 -116
1S227	♦TOSJ	191 - 89
1S228	♦TOSJ	193 - 34
1S229	♦TOSJ	194 - 13
1S230	♦TOSJ	195 - 87
1S231	♦TOSJ	196 -177
1S232	♦TOSJ	197 -133
1S233	♦TOSJ	198 -195
1S234	♦TOSJ	199 -142
1S235	♦TOSJ	200 -186
1S236	♦TOSJ	202 - 86
1S237	♦TOSJ	203 -182
1S238	♦TOSJ	204 -119
1S239	♦TOSJ	205 -124
1S240	♦TOSJ	207 - 48
1S241	♦TOSJ	208 -142
1S242	♦TOSJ	209 -199
1S243	♦TOSJ	211 - 34
1S244	♦TOSJ	212 - 43
1S245	♦TOSJ	212 -131
1S246	♦TOSJ	213 - 59
1S247	♦TOSJ	213 -154
1S248	♦TOSJ	214 -138
1S249	♦TOSJ	215 - 43
1S250	♦TOSJ	216 - 48
1S251	♦TOSJ	217 - 29
1S252	♦TOSJ	218 - 11
1S253	♦TOSJ	218 -191
1S254	♦TOSJ	219 -170
1S255	♦TOSJ	220 -131
1S256	♦TOSJ	221 - 22
1S257	♦TOSJ	221 - 93
1S258	♦TOSJ	222 - 44
1S259	♦TOSJ	222 -188
1S260	♦TOSJ	223 -100
1S261	♦TOSJ	224 - 32
1S262	♦TOSJ	378 - 5
1S263	♦TOSJ	378 - 95
1S264	♦TOSJ	379 - 2
1S265	♦TOSJ	379 -191
1S266	♦TOSJ	380 -139
1S267	♦TOSJ	381 - 60
1S268	♦TOSJ	382 - 18
1S269	♦TOSJ	382 -139
1S270	♦TOSJ	383 - 46
1S271	♦TOSJ	383 -126
1S272	♦TOSJ	384 - 23
1S273	♦TOSJ	384 -120
1S274	♦TOSJ	384 -188
1S275	♦TOSJ	385 - 85
1S276	♦TOSJ	385 -155
1S277	♦TOSJ	386 - 33
1S278	♦TOSJ	386 -140
1S279	♦TOSJ	387 - 55
1S280	♦TOSJ	387 -118
1S281	♦TOSJ	387 -199
1S282	♦TOSJ	388 -113
1S283	♦TOSJ	389 - 22
1S284	♦TOSJ	389 -131
1S285	♦TOSJ	390 - 24
1S286	♦TOSJ	390 -131
1S287	♦TOSJ	390 -199
1S288	♦TOSJ	391 - 66
1S289	♦TOSJ	391 -136
1S290	♦TOSJ	392 - 48
1S291	♦TOSJ	392 -123
1S292	♦TOSJ	393 - 36
1S293	♦TOSJ	393 -130
1S294	♦TOSJ	394 - 50
1S295	♦TOSJ	394 -157
1S296	♦TOSJ	395 - 65
1S297	♦TOSJ	395 -174
1S298	♦TOSJ	396 - 29
1S299	♦TOSJ	396 - 92
1S300	♦TOSJ	396 -179
1S301	♦TOSJ	397 - 68
1S302	♦TOSJ	397 -137
1S303	♦TOSJ	398 - 11
1S410	SLCB	288 - 49
1S411	SLCB	288 -132
1S413	SLCB	289 - 9
1S415	SLCB	289 - 91
1S417	SLCB	289 -161
1S419	SLCB	402 -193
1S420	SLCB	294 - 13
1S421	SLCB	294 - 46
1S423	SLCB	294 - 92
1S425	SLCB	294 -129
1S426	SLCB	232 -149
	TSAJ	
1S427	SLCB	294 -145
1S430	SLCB	287 -206
1S431	SLCB	288 - 50
1S432	SLCB	288 -133
1S434	SLCB	289 - 10
1S436	SLCB	289 - 92
1S438	SLCB	289 -162
1S441	CEI	287 -147
	SLCB	
1S442	CEI	287 -152
	SLCB	
1S446	CEI	288 - 54
	SLCB	
1S447	CEI	233 - 59
	HSE	
1S448	CEI	232 -206
	HSE	
1S449	CEI	233 - 60
	HSE	
1S451	CEI	232 -207
	HSE	
1S452	CEI	233 - 61
	HSE	
1S453	CEI	233 - 66
	HSE	
1S456	CEI	274 -112
	HSE	
1S457	CEI	274 -123
	HSE	
1S458	HSE	274 -133
1S459	HSE	274 -137
1S770	IMTM	296 - 40
1S770R	IMTM	296 - 41
1S920	FSC	235 -201
1S921	FSC	235 -202
1S922	FSC	235 -203
1S923	FSC	235 -204
1S941#B	♦SHEJ	308 -160
1S942#B	♦SHEJ	308 -180
1S951	SLCB	251 -101
1S952#C	NECJ	245 - 24
1S953	NECE	245 - 34
	♦NECJ	
1S954	NECE	246 - 66
	♦NECJ	
1S955	NECE	246 -215
	♦NECJ	
1S990	NJRC	163 - 29
1S991	NJRC	163 - 72
1S1011	NJRC	434 - 44
1S1288	IMTM	297 -110
1S1288R	IMTM	298 - 15
1S1314	IMTM	233 -159
	♦TOSJ	
1S1342	MITJ	279 - 72
1S1343	MITJ	279 - 82
1S1344	MITJ	279 - 88
1S1345	MITJ	279 - 98
1S1346	MITJ	279 -110
1S1347	MITJ	279 -122
1S1348	MITJ	401 -133
1S1349	MITJ	406 - 28
1S1465	TOSJ	294 - 39
1S1553	IMTM	234 -157
	♦TOSJ	
1S1554	IMTM	234 -158
	♦TOSJ	
1S1555	IMTM	234 -159
	♦TOSJ	
1S1575	TOSJ	295 - 77
1S1576	TOSJ	295 -126
1S1577	TOSJ	295 -162
1S1578	TOSJ	403 - 64
1S1579	IMTM	233 -144
	♦TOSJ	
1S1580	IMTM	233 -145
	♦TOSJ	
1S1585	IMTM	246 -202
	♦TOSJ	
1S1586	IMTM	246 - 19
	♦TOSJ	
1S1587	IMTM	246 - 20
	♦TOSJ	
1S1588	IMTM	245 - 39
	♦TOSJ	
1S1640	TOSJ	296 - 61
1S1641	TOSJ	297 -120
1S1650	CEI	231 - 1
	TOSJ	
1S1651	CEI	231 - 2
	TOSJ	
1S1715	IMTM	176 -207
1S1716	IMTM	179 -159
1S1717	IMTM	183 - 95
1S1718	IMTM	186 - 93
1S1829	IMTM	282 - 68
	♦TOSJ	
1S1830	IMTM	401 -198
	♦TOSJ	
1S1832	IMTM	248 -159
	♦TOSJ	
1S1834	IMTM	248 -123
	♦TOSJ	
1S1835	IMTM	248 -131
	♦TOSJ	
1S1855	♦NECJ	244 -173
1S1856	♦NECJ	244 -172
1S1857	♦NECJ	244 -139
1S1885	IMTM	280 - 86
	♦TOSJ	
1S1885A	IMTM	282 -165
	♦TOSJ	
1S1886	IMTM	280 -182
	♦TOSJ	
1S1886A	IMTM	282 -178
	♦TOSJ	
1S1887	IMTM	281 - 86
	♦TOSJ	
1S1887A	IMTM	282 -199
	♦TOSJ	
1S1888	IMTM	281 -202
	♦TOSJ	
1S1888H	♦IMTM	285 - 72
1S1888J	♦IMTM	402 - 73
1S1890	♦TOSJ	283 - 1
1S1891	♦TOSJ	283 - 22
1S1892	♦TOSJ	402 - 29
1S1925	NJRC	439 - 50
1S1926	NJRC	439 - 51
1S1941	IMTM	276 -159
1S1941B	IMTM	277 -195
1S1941L	IMTM	277 -217
1S1942	IMTM	276 -182
1S1943	♦IMTM	277 - 1
1S1944	IMTM	277 - 42
1S1944H	IMTM	279 - 50
1S1944J	IMTM	401 -126
1S1992	NECJ	238 - 51
1S1993	NECJ	238 - 36
1S1994	NECJ	238 - 52
1S1995	NECJ	238 - 37
1S2030A	SLCB	165 - 70
1S2033	SLCB	166 - 19
1S2033A	SLCB	166 - 1
1S2036	SLCB	166 -196
1S2036A	SLCB	166 -177
1S2039	SLCB	167 -161
1S2039A	SLCB	167 -143
1S2043	SLCB	168 -180
1S2043A	SLCB	168 -159
1S2047	SLCB	170 - 18
1S2047A	SLCB	169 -200
1S2051	SLCB	171 -100
1S2051A	SLCB	171 - 75
1S2056	SLCB	172 -190
1S2056A	SLCB	172 -163
1S2062	SLCB	175 - 42
1S2062A	SLCB	174 -181
1S2067	SLCB	183 - 93
1S2068A	SLCB	177 -201
1S2069	SLCB	183 - 94
1S2070	SLCB	245 -189
1S2071	SLCB	244 -168
1S2072	SLCB	246 -185
1S2074H	♦HITJ	245 -158
1S2075	SLCB	180 - 9
1S2075A	SLCB	179 -187
1S2075K	♦HITJ	245 - 51
1S2076	♦HITJ	245 - 37
	SLCB	
1S2076A	♦HITJ	246 - 50
	SLCB	
1S2082	SLCB	181 -192
1S2082A	SLCB	181 -167
1S2090	♦HITJ	438 - 43
1S2091	IMTM	232 -216
SLCB	♦TOSJ	
1S2091A	SLCB	184 -215
1S2092	IMTM	232 -217
SLCB	♦TOSJ	
1S2095A	IMTM	251 -103
SLCB	♦TOSJ	
1S2097	SLCB	247 -141
1S2098	SLCB	247 -113
1S2099	SLCB	247 - 99
1S2100	SLCB	187 - 68
1S2100A	SLCB	187 - 41
1S2110	SLCB	189 - 11
1S2110A	SLCB	188 -194
1S2120	SLCB	190 -180
1S2120A	SLCB	190 -156
1S2128	SLCB	174 - 19
1S2129	SLCB	183 -208
1S2130	SLCB	192 -146
1S2130A	SLCB	192 -128
1S2131	SLCB	199 - 95
1S2134	NECJ	245 -101
	SLCB	
1S2135	♦NECJ	246 - 57
	SLCB	
1S2144	SLCB	245 - 99
1S2145	SLCB	246 -206
1S2148	SLCB	283 -138
1S2149	SLCB	283 -202
1S2150	SLCB	194 -169
1S2150A	SLCB	194 -152
1S2160A	SLCB	196 - 57
1S2180	SLCB	198 - 81
1S2180A	SLCB	198 - 64
1S2186	SLCB	237 -108
	♦TOSJ	
1S2187	SLCB	439 - 98
	♦TOSJ	
1S2190	NECJ	181 -124
	SLCB	
1S2191	NECJ	181 -125
1S2192	NECJ	181 -126
	SLCB	
1S2198	SLCB	439 - 52
1S2210	NECJ	238 - 29
1S2211	NECJ	238 - 65
1S2220	SLCB	201 -185
1S2220A	SLCB	201 -169
1S2233	SLCB	284 -217
1S2234	SLCB	285 - 73
1S2235	SLCB	402 - 74
1S2236	IMTM	231 - 3
SLCB	♦TOSJ	
1S2237	SLCB	431 - 1
1S2240	SLCB	203 - 84
1S2240A	SLCB	203 - 70
1S2247	MITJ	311 -177
	SLCB	
1S2248	MITJ	311 -179
	SLCB	
1S2249	MITJ	311 -183
	SLCB	
1S2250	MITJ	404 -211
	SLCB	
1S2251	MITJ	408 - 95
	SLCB	
1S2252	MITJ	411 -202
	SLCB	
1S2253	MITJ	415 -176
	SLCB	
1S2254	MITJ	418 - 7
	SLCB	
1S2255	MITJ	419 -208
	SLCB	
1S2256	MITJ	404 -146
	SLCB	
1S2257	♦MITJ	408 - 20
	SLCB	
1S2258	MITJ	411 -180
	SLCB	
1S2259	MITJ	413 - 33
	SLCB	
1S2260	MITJ	414 - 39
	SLCB	
1S2261	MITJ	408 -113
	SLCB	
1S2262	MITJ	413 - 90
	SLCB	
1S2263	MITJ	414 - 91
	SLCB	
1S2264	MITJ	415 -190
	SLCB	
1S2265	MITJ	418 - 16
	SLCB	
1S2266	MITJ	418 -198
	SLCB	
1S2267	♦HITJ	438 - 44
1S2268	♦HITJ	438 - 45
1S2270	SAKJ	280 -160
	SLCB	
1S2270A	SLCB	205 - 3
1S2271	SAKJ	281 - 66
	SLCB	
1S2272	SAKJ	281 -181
	SLCB	
1S2273	SAKJ	282 - 55
	SLCB	
1S2274	SAKJ	401 -181
	SLCB	
1S2300	SLCB	206 -153
1S2300A	SLCB	206 -137
1S2306	SLCB	279 -114
1S2307	SLCB	279 -127
1S2308	SLCB	401 -139
1S2309	SLCB	411 - 64
1S2310	SLCB	276 - 32
1S2311	SLCB	276 - 38
1S2312	SLCB	401 - 72
1S2313	SLCB	275 - 8
1S2314	SLCB	275 - 16
1S2315	SLCB	401 - 37
1S2330	SLCB	208 - 41
1S2330A	SLCB	208 - 25
1S2342	MITJ	309 - 39
1S2343	MITJ	309 - 47
1S2344	MITJ	309 - 58
1S2345	MITJ	309 - 65
1S2346	MITJ	309 - 69
1S2347	MITJ	309 - 79
1S2348H	♦HITJ	252 -135
1S2392	NECJ	280 -203
1S2394	NECJ	281 -108
1S2396	NECJ	282 - 2
1S2398	NECJ	282 - 87
1S2401	MITJ	279 - 70
1S2402	MITJ	279 - 79
1S2403	MITJ	279 - 95
1S2404	MITJ	279 -107
1S2405	MITJ	279 -120
1S2406	MITJ	401 -132
1S2408	MITJ	285 -205
1S2409	MITJ	286 - 17
1S2410	MITJ	286 - 57
1S2411	MITJ	286 - 87
1S2412	MITJ	286 -107
1S2413	MITJ	286 -136
1S2414	MITJ	286 -156
1S2415	MITJ	285 -206
1S2416	MITJ	286 - 18
1S2417	MITJ	286 - 58
1S2418	MITJ	286 - 88
1S2419	MITJ	286 -108
1S2420	MITJ	286 -137
1S2421	MITJ	286 -157
1S2428	MITJ	296 - 35
1S2429	MITJ	296 - 60
1S2430	MITJ	296 - 97
1S2431	MITJ	296 -110
1S2432	MITJ	296 -140
1S2433	MITJ	296 -149
1S2434	MITJ	294 -182
1S2435	MITJ	294 -212
1S2436	MITJ	295 - 26
1S2437	MITJ	295 - 52
1S2438	MITJ	295 - 78
1S2439	MITJ	295 - 99
1S2452	♦TOSJ	176 - 24
1S2453	♦TOSJ	176 - 25
1S2454	♦TOSJ	176 - 26
1S2460	IMTM	274 -121
	♦TOSJ	
1S2461	IMTM	274 -131
	♦TOSJ	
1S2462	IMTM	274 -145
	♦TOSJ	

Δ-Registered with JEDEC by this manufacturer

♦-Mfr's data sheet available in microfilm service

1. TYPE No. CROSS INDEX

IN TYPE NUMBER SEQUENCE

TYPE No.	MFRS	Pg&Line
1S2463	IMTM	274 -152
	TOSJ	
1S2464	SAKJ	296 - 98
1S2471	RHMJ	243 - 13
1S2472	RHMJ	242 -201
1S2473	RHMJ	242 -190
1S2588	NJRC	445 - 8
1S2606	NECJ	281 -220
1S2608	NECJ	282 - 85
1S2610	NECJ	401 -216
1S2711	♦TOSJ	248 -156
1S2712	TOSJ	248 -157
1S2745	TOSJ	248 -136
1S2746	TOSJ	248 -137
1S2747	TOSJ	248 -139
1S2756	IMTM	248 -126
	♦TOSJ	
1S2757	IMTM	248 -134
	♦TOSJ	
1S2762	NECJ	288 - 93
1S2764	NECJ	288 -191
1S2766	NECJ	289 - 57
1S2766A	NECJ	289 - 58
1S2768	NECJ	289 -127
1S2768A	NECJ	289 -128
1S2775	IMTM	248 -118
	♦TOSJ	
1S2776	IMTM	248 -125
	♦TOSJ	
1S2777	IMTM	248 -133
	♦TOSJ	
1S2787	RHMJ	245 - 35
1S2790	♦HITJ	438 - 46
1S2835	NECE	231 - 95
	♦NECJ	
1S2836	NECE	231 - 96
	♦NECJ	271 - 72
1S2837	NECE	231 - 97
	♦NECJ	
1S2838	♦NECE	231 - 98
1S4006,A	SLCB	178 -161
1S4007,A	SLCB	180 -153
1S4008,A	SLCB	182 -142
1S4009,A	SLCB	185 -174
1S4010,A	SLCB	188 - 35
1S4011,A	SLCB	189 -149
1S4012,A	SLCB	191 -124
1S4013,A	SLCB	193 - 66
1S4015,A	SLCB	195 -121
1S4016,A	SLCB	197 - 4
1S4018,A	SLCB	199 - 20
1S4020,A	SLCB	201 - 13
1S4022,A	SLCB	202 -120
1S4024,A	SLCB	204 - 6
1S4027,A	SLCB	205 -160
1S4030,A	SLCB	207 - 84
1S4033,A	SLCB	208 -177
1S4036,A	SLCB	210 - 26
1S4039,A	SLCB	211 - 63
1S4043,A	SLCB	212 - 74
1S4047,A	SLCB	213 - 91
1S4051,A	SLCB	214 - 85
1S4056,A	SLCB	215 - 74
1S4062,A	SLCB	216 - 78
1S4068,A	SLCB	217 - 59
1S4075,A	SLCB	218 - 42
1S4082,A	SLCB	219 - 19
1S4091,A	SLCB	219 -197
1S4100,A	SLCB	220 -161
1S4110,A	SLCB	221 -121
1S4120,A	SLCB	222 - 75
1S4130,A	SLCB	223 - 28
1S4150,A	SLCB	224 - 62
1S4160,A	SLCB	224 -188
1S4180,A	SLCB	226 - 20
1S4200,A	SLCB	227 - 14
1S5006,A	SLCB	379 - 48
1S5007,A	SLCB	379 -181
1S5008,A	SLCB	380 - 88
1S5009,A	SLCB	381 - 8
1S5010,A	SLCB	381 -115
1S5011,A	SLCB	382 - 6
1S5012,A	SLCB	382 -123
1S5013,A	SLCB	383 - 33
1S5015,A	SLCB	384 - 7
1S5015C	SLCB	384 - 24
1S5016,A	SLCB	384 -106
1S5016C	SLCB	384 -121
1S5018,A	SLCB	385 - 70
1S5018C	SLCB	385 - 86
1S5020,A	SLCB	386 - 20
1S5020C	SLCB	386 - 34
1S5022,A	SLCB	386 -125
1S5022C	SLCB	386 -141
1S5024,A	SLCB	387 - 41
1S5024C	SLCB	387 - 56
1S5027,A	SLCB	387 -183
1S5027C	SLCB	387 -200
1S5030,A	SLCB	388 -101
1S5030C	SLCB	388 -114
1S5033,A	SLCB	389 - 7
1S5033C	SLCB	389 - 23
1S5036,A	SLCB	389 -118
1S5036C	SLCB	389 -132
1S5039,A	SLCB	390 - 11
1S5039C	SLCB	390 - 25
1S5043,A	SLCB	390 -119
1S5043C	SLCB	390 -132
1S5047,A	SLCB	391 - 53
1S5047C	SLCB	391 - 67
1S5051,A	SLCB	391 -189
1S5051C	SLCB	391 -201
1S5056,A	SLCB	392 -109
1S5056C	SLCB	392 -124

TYPE No.	MFRS	Pg&Line
1S5062,A	SLCB	393 - 24
1S5062C	SLCB	393 - 37
1S5068,A	SLCB	393 -117
1S5068C	SLCB	393 -131
1S5075,A	SLCB	394 - 37
1S5075C	SLCB	394 - 51
1S5082,A	SLCB	394 -144
1S5082C	SLCB	394 -158
1S5091,A	SLCB	395 - 53
1S5091C	SLCB	395 - 66
1S5100,A	SLCB	395 -160
1S5100C	SLCB	395 -175
1S5110,A	SLCB	396 - 80
1S5110C	SLCB	396 - 93
1S5120,A	SLCB	396 -167
1S5120C	SLCB	396 -180
1S5130,A	SLCB	397 - 56
1S5130C	SLCB	397 - 69
1S5150,A	SLCB	397 -194
1S5150C	SLCB	398 - 12
1S6006	SLCB	379 - 60
1S6006A	SLCB	379 - 49
1S6007	SLCB	379 -192
1S6007A	SLCB	379 -182
1S6008	SLCB	380 -100
1S6008A	SLCB	380 - 89
1S6009	SLCB	381 - 20
1S6009A	SLCB	381 - 9
1S6010	SLCB	381 -130
1S6010A	SLCB	381 -116
1S6011	SLCB	382 - 19
1S6011A	SLCB	382 - 7
1S6012	SLCB	382 -140
1S6012A	SLCB	382 -124
1S6013	SLCB	383 - 47
1S6013A	SLCB	383 - 34
1S6015	SLCB	384 - 25
1S6015A	SLCB	384 - 8
1S6016	SLCB	384 -122
1S6016A	SLCB	384 -107
1S6018	SLCB	385 - 87
1S6018A	SLCB	385 - 71
1S6020	SLCB	386 - 35
1S6020A	SLCB	386 - 21
1S6022	SLCB	386 -142
1S6022A	SLCB	386 -126
1S6024	SLCB	387 - 57
1S6024A	SLCB	387 - 42
1S6027	SLCB	387 -201
1S6027A	SLCB	387 -184
1S6030	SLCB	388 -115
1S6030A	SLCB	388 -102
1S6033	SLCB	389 - 24
1S6033A	SLCB	389 - 8
1S6036	SLCB	389 -133
1S6036A	SLCB	389 -119
1S6039	SLCB	390 - 26
1S6039A	SLCB	390 - 12
1S6043	SLCB	390 -133
1S6043A	SLCB	390 -120
1S6047	SLCB	391 - 68
1S6047A	SLCB	391 - 54
1S6051	SLCB	391 -202
1S6051A	SLCB	391 -190
1S6056	SLCB	392 -125
1S6056A	SLCB	392 -110
1S6062	SLCB	393 - 38
1S6062A	SLCB	393 - 25
1S6068	SLCB	393 -132
1S6068A	SLCB	393 -118
1S6075	SLCB	394 - 52
1S6075A	SLCB	394 - 38
1S6082	SLCB	394 -159
1S6082A	SLCB	394 -145
1S6091	SLCB	395 - 67
1S6091A	SLCB	395 - 54
1S6100	SLCB	395 -176
1S6100A	SLCB	395 -161
1S6110	SLCB	396 - 94
1S6110A	SLCB	396 - 81
1S6120	SLCB	396 -181
1S6120A	SLCB	396 -168
1S6130	SLCB	397 - 70
1S6130A	SLCB	397 - 57
1S6150	SLCB	398 - 13
1S6150A	SLCB	397 -195
1S6160	SLCB	398 - 90
1S6160A	SLCB	398 - 81
1S6180	SLCB	399 - 15
1S6180A	SLCB	399 - 6
1S6200	SLCB	399 -112
1S6200A	SLCB	399 -103
1S7030A	♦SLCB	165 - 71
1S7033	SLCB	166 - 20
1S7033A	♦SLCB	166 - 2
1S7033B	SLCB	166 - 24
1S7036,B	SLCB	166 -178
1S7036A	♦SLCB	166 -179
1S7039,B	SLCB	167 -144
1S7039A	♦SLCB	167 -145
1S7043,B	SLCB	168 -160
1S7043A	♦SLCB	168 -161
1S7047,B	SLCB	170 - 19
1S7047A	♦SLCB	169 -201
1S7051,B	SLCB	171 -101
1S7051A	♦SLCB	171 - 76
1S7056,B	SLCB	172 -191
1S7056A	♦SLCB	172 -164
1S7062,B	SLCB	174 -182
1S7062A	♦SLCB	174 -183
1S7068,B	SLCB	177 -202
1S7068A	♦SLCB	177 -203
1S7075,B	SLCB	179 -188
1S7075A	SLCB	179 -189

TYPE No.	MFRS	Pg&Line
1S7082,A,B	♦SLCB	181 -168
1S7091,B	SLCB	184 -216
1S7091A	♦SLCB	185 - 1
1S7100,B	SLCB	187 - 42
1S7100A	♦SLCB	187 - 43
1S7110,B	SLCB	188 -195
1S7110A	♦SLCB	188 -196
1S7120,B	SLCB	190 -157
1S7120A	♦SLCB	190 -158
1S7130,B	SLCB	192 -129
1S7130A	♦SLCB	192 -130
1S7150,B	SLCB	194 -153
1S7150A	♦SLCB	194 -154
1S7160A	SLCB	196 - 58
1SM1	♦SELI	280 - 42
1SM3	♦SELI	287 -213
1SM6	♦SELI	291 -137
1SM15	♦SELI	296 - 39
1SM25	♦SELI	298 -133
1SM40	♦SELI	301 -103
1SM55	♦SELI	303 - 42
1SM70	♦SELI	304 - 27
1SM100	♦SELI	305 -188
1SM150	♦SELI	307 - 52
1SM200	♦SELI	308 -154
1SR19-100	SAKJ	294 - 14
1SR19-250	SAKJ	294 - 53
1SR19-400	SAKJ	294 - 93
1SR20-100	SAKJ	300 - 49
1SR20-250	SAKJ	300 - 93
1SR20-400	SAKJ	300 -123
1SR35-50	RHMJ	280 - 11
1SR35-100	RHMJ	280 - 87
1SR35-200	RHMJ	280 -184
1SR35-400	RHMJ	281 - 88
1SR124-50	RHMJ	280 - 12
1SR124-100	RHMJ	280 - 88
1SR124-200	RHMJ	280 -185
1SR124-400	RHMJ	281 - 89
1SS16	♦NECJ	438 - 64
1SS23	NECJ	437 - 39
1SS41	RHMJ	246 -115
1SS53	NECE	234 -180
	♦NECJ	
1SS54	NECE	234 -181
	♦NECJ	
1SS55	NECE	234 -182
	♦NECJ	
1SS68	HSE	245 -100
1SS78	NECJ	437 - 40
1SS81	♦HITJ	249 -104
1SS82	♦HITJ	249 -128
1SS83	♦HITJ	249 -135
1SS84	♦HITJ	250 - 98
1SS85	♦HITJ	446 - 44
1SS86	♦HITJ	439 - 24
1SS87	♦HITJ	439 - 25
1SS88	♦HITJ	436 - 81
1SS92	RHMJ	246 - 43
1SS93	RHMJ	245 -136
1SS94	RHMJ	245 - 25
1SS103	NECE	446 - 45
1SS104	IMTM	234 -193
	TOSJ	
1SS108	♦HITJ	244 -204
1SS110	♦HITJ	234 - 93
1SS115	♦HITJ	246 -216
1SS116	♦HITJ	247 - 92
1SS117	♦HITJ	245 - 36
1SS118	♦HITJ	246 - 86
1SS122H	HITJ	249 -136
1SS123	♦NECJ	271 - 73
1SS130	RHMJ	246 -116
1SS131	RHMJ	246 -183
1SS132	RHMJ	245 -159
1SS133	RHMJ	245 - 40
1SS134	RHMJ	242 -191
1SS135	RHMJ	234 - 81
1SS136	RHMJ	246 - 44
1SS137	RHMJ	245 -137
1SS138	RHMJ	245 - 26
1SS139	RHMJ	246 -192
1SS140	RHMJ	246 - 5
1SS141	RHMJ	245 - 55
1SS142	RHMJ	247 -147
1SS143	RHMJ	247 -129
1SS144	RHMJ	247 -111
1SS145	RHMJ	247 -148
1SS146	RHMJ	247 -130
1SS147	RHMJ	247 -112
1SS149H	HITJ	249 -133
1SS150(A)	HITJ	234 - 94
1SS151(A)	HITJ	439 - 47
1SS152(A)	HITJ	234 - 82
1SS165(A)	HITJ	439 - 48
1SS166(A)	HITJ	436 - 40
1SS168(A)	HITJ	234 - 95
1SS172	♦HITJ	247 - 94
1SS173	♦HITJ	245 - 57
1SS173A	♦HITJ	246 - 60
1SS174	♦HITJ	243 -164
1SS175	♦HITJ	246 -165
1SS175A	♦HITJ	247 - 72
1SS198	♦HITJ	237 -105
1SS199	♦HITJ	237 -102
1SS228	♦HITJ	374 - 7
1SS274	♦HITJ	374 - 8
1SS275	♦HITJ	374 - 9
1SS276	♦HITJ	374 - 10
1SV45	NECJ	444 - 4
1SV55	♦HITJ	435 - 58
1SV68	♦HITJ	235 -175
1SV69	♦HITJ	231 - 4
1SV70	♦HITJ	231 - 5

TYPE No.	MFRS	Pg&Line
1SV87	♦HITJ	232 -146
1SV89	♦HITJ	231 - 6
1SV97	♦HITJ	232 -147
1SV98	♦HITJ	438 - 65
1SV110	♦HITJ	231 - 7
1SV111	♦HITJ	231 - 8
1SV113	♦HITJ	232 -148
1SV114(A)	HITJ	444 - 5
1SV124	♦HITJ	231 - 9
1SV125(A)	HITJ	444 - 6
1SV126	♦HITJ	231 - 10
1SV132(A)	HITJ	444 - 7
1SV134	♦HITJ	231 - 11
1SV136(A)	HITJ	444 - 8
1SV141(A)	HITJ	444 - 9
1SV146	♦HITJ	231 - 12
1SV154	♦HITJ	238 -118
1SV178	♦HITJ	238 -119
1SV187	♦HITJ	238 -120
1SV192	♦HITJ	238 -216
1SX170	SLCB	252 -121
1SX171	SLCB	252 -183
1SX172	SLCB	253 - 91
1SX173	SLCB	254 - 85
1SX174	SLCB	254 -144
1SX175	SLCB	255 - 1
1SZ45A	NECE	176 -103
	NECJ	
1SZ46A	NECE	176 -104
	NECJ	
1SZ47	NECE	176 -105
	NECJ	
1SZ47A	NECE	176 -106
	NECJ	
1SZ48	NECE	176 -107
	NECJ	
1SZ50	NECE	174 -114
	NECJ	
1SZ51	NECE	174 -115
	NECJ	
1SZ52	NECE	174 -116
	NECJ	
1SZ53	NECE	174 -117
	NECJ	
1SZ57	IMTM	176 -202
	TOSJ	
1SZ58	IMTM	176 -203
	TOSJ	
1SZ59	IMTM	176 -204
	TOSJ	
1SZ60	IMTM	176 -205
1T22	♦SONY	234 - 2
1T22G	SONY	233 -134
1T23	♦SONY	232 -176
1T23G	SONY	232 -177
1T26	SONY	234 - 3
1T501	CEI	276 -162
1T502	CEI	276 -186
1T504	CEI	277 - 6
1T505	CEI	277 - 30
1T509	CEI	277 - 71
1T510	CEI	401 - 96
1TH61	TOSJ	248 -153
1Z6.2	IMTM	175 -141
	♦TOSJ	
1Z6.8	IMTM	178 -125
	♦TOSJ	
1Z7.5	IMTM	180 -128
	♦TOSJ	
1Z8.2	IMTM	182 -115
	♦TOSJ	
1Z9.1	IMTM	185 -144
	♦TOSJ	
1Z10	IMTM	188 - 1
	♦TOSJ	
1Z11	IMTM	189 -117
	♦TOSJ	
1Z12	IMTM	191 - 90
	♦TOSJ	
1Z13	IMTM	193 - 35
	♦TOSJ	
1Z15	IMTM	195 - 88
	♦TOSJ	
1Z16	IMTM	196 -178
	♦TOSJ	
1Z18	IMTM	198 -196
	♦TOSJ	
1Z20	IMTM	200 -187
	♦TOSJ	
1Z22	IMTM	202 - 87
	♦TOSJ	
1Z24	IMTM	203 -183
	♦TOSJ	
1Z27	IMTM	205 -125
	♦TOSJ	
1Z30	IMTM	207 - 49
	♦TOSJ	
1Z33	IMTM	208 -143
	TOSJ	
1.25AGD	SCN	163 - 94
1.5K6.8	GSE	335 - 25
1.5K6.8A	GSE	335 - 26
1.5K7.5	GSE	335 - 27
1.5K7.5A	GSE	335 - 28
1.5K8.2	GSE	335 - 29
1.5K8.2A	GSE	335 - 30
1.5K9.1	GSE	335 - 31
1.5K9.1A	GSE	335 - 32
1.5K10	GSE	335 - 33
1.5K10A	GSE	335 - 34
1.5K11	GSE	335 - 35
1.5K11A	GSE	335 - 36
1.5K12	GSE	335 - 37
1.5K12A	GSE	335 - 38

TYPE No.	MFRS	Pg&Line
1.5K13	GSE	335 - 39
1.5K13A	GSE	335 - 40
1.5K15	GSE	335 - 41
1.5K15A	GSE	335 - 42
1.5K16	GSE	335 - 43
1.5K16A	GSE	335 - 44
1.5K18	GSE	335 - 45
1.5K18A	GSE	335 - 46
1.5K20	GSE	335 - 47
1.5K20A	GSE	335 - 48
1.5K22	GSE	335 - 49
1.5K22A	GSE	335 - 50
1.5K24	GSE	335 - 51
1.5K24A	GSE	335 - 52
1.5K27	GSE	335 - 53
1.5K27A	GSE	335 - 54
1.5K30	GSE	335 - 55
1.5K30A	GSE	335 - 56
1.5K33	GSE	335 - 57
1.5K33A	GSE	335 - 58
1.5K36	GSE	335 - 59
1.5K36A	GSE	335 - 60
1.5K39	GSE	335 - 61
1.5K39A	GSE	335 - 62
1.5K43	GSE	335 - 63
1.5K43A	GSE	335 - 64
1.5K47	GSE	335 - 65
1.5K47A	GSE	335 - 66
1.5K51	GSE	335 - 67
1.5K51A	GSE	335 - 68
1.5K56	GSE	335 - 69
1.5K56A	GSE	335 - 70
1.5K62	GSE	335 - 71
1.5K62A	GSE	335 - 72
1.5K68	GSE	335 - 73
1.5K68A	GSE	335 - 74
1.5K75	GSE	335 - 75
1.5K75A	GSE	335 - 76
1.5K82	GSE	335 - 77
1.5K82A	GSE	335 - 78
1.5K91	GSE	335 - 79
1.5K91A	GSE	335 - 80
1.5K100	GSE	335 - 81
1.5K100A	GSE	335 - 82
1.5K110	GSE	335 - 83
1.5K110A	GSE	335 - 84
1.5K120	GSE	335 - 85
1.5K120A	GSE	335 - 86
1.5K130	GSE	335 - 87
1.5K130A	GSE	335 - 88
1.5K150	GSE	335 - 89
1.5K150A	GSE	335 - 90
1.5K160	GSE	335 - 91
1.5K160A	GSE	335 - 92
1.5K170	GSE	335 - 93
1.5K170A	GSE	335 - 94
1.5K180	GSE	335 - 95
1.5K180A	GSE	335 - 96
1.5K200	GSE	335 - 97
1.5K200A	GSE	335 - 98
1.5KC6.8	♦GSE	335 - 99
1.5KC6.8A	♦GSE	335 -100
1.5KC7.5	♦GSE	335 -101
1.5KC7.5A	♦GSE	335 -102
1.5KC7.5C	♦GSE	335 -103
1.5KC7.5CA	♦GSE	335 -104
1.5KC8.2	♦GSE	335 -105
1.5KC8.2A	♦GSE	335 -106
1.5KC8.2C	♦GSE	335 -107
1.5KC8.2CA	♦GSE	335 -108
1.5KC9.1	♦GSE	335 -109
1.5KC9.1A	♦GSE	335 -110
1.5KC9.1C	♦GSE	336 - 1
1.5KC9.1CA	♦GSE	336 - 2
1.5KC10	♦GSE	336 - 3
1.5KC10A	♦GSE	336 - 4
1.5KC10C	♦GSE	336 - 5
1.5KC10CA	♦GSE	336 - 6
1.5KC11	♦GSE	336 - 7
1.5KC11A	♦GSE	336 - 8
1.5KC11C	♦GSE	336 - 9
1.5KC11CA	♦GSE	336 - 10
1.5KC12	♦GSE	336 - 11
1.5KC12A	♦GSE	336 - 12
1.5KC13	♦GSE	336 - 13
1.5KC13A	♦GSE	336 - 14
1.5KC15	♦GSE	336 - 15
1.5KC15A	♦GSE	336 - 16
1.5KC16	♦GSE	336 - 17
1.5KC16A	♦GSE	336 - 18
1.5KC18	♦GSE	336 - 19
1.5KC18A	♦GSE	336 - 20
1.5KC20	♦GSE	336 - 21
1.5KC20A	♦GSE	336 - 22
1.5KC22	♦GSE	336 - 23
1.5KC22A	♦GSE	336 - 24
1.5KC24	♦GSE	336 - 25
1.5KC24A	♦GSE	336 - 26
1.5KC27	♦GSE	336 - 27
1.5KC27A	♦GSE	336 - 28
1.5KC30	♦GSE	336 - 29
1.5KC30A	♦GSE	336 - 30
1.5KC33	♦GSE	336 - 31
1.5KC33A	♦GSE	336 - 32
1.5KC36	♦GSE	336 - 33
1.5KC36A	♦GSE	336 - 34
1.5KC39	♦GSE	336 - 35
1.5KC39A	♦GSE	336 - 36
1.5KC43	♦GSE	336 - 37
1.5KC43A	♦GSE	336 - 38
1.5KC47	♦GSE	336 - 39
1.5KC47A	♦GSE	336 - 40
1.5KC51	♦GSE	336 - 41
1.5KC51A	♦GSE	336 - 42

Δ-Registered with JEDEC by this manufacturer

♦-Mfr's data sheet available in microfilm service

1. TYPE No. CROSS INDEX

IN TYPE NUMBER SEQUENCE

TYPE No.	MFRS	Pg&Line
1.5KC56	♦GSE	336 - 43
1.5KC56A	♦GSE	336 - 44
1.5KC62	♦GSE	336 - 45
1.5KC62A	♦GSE	336 - 46
1.5KC68	♦GSE	336 - 47
1.5KC68A	♦GSE	336 - 48
1.5KC75	♦GSE	336 - 49
1.5KC75A	♦GSE	336 - 50
1.5KC82	♦GSE	336 - 51
1.5KC82A	♦GSE	336 - 52
1.5KC91	♦GSE	336 - 53
1.5KC91A	♦GSE	336 - 54
1.5KC100	♦GSE	336 - 55
1.5KC100A	♦GSE	336 - 56
1.5KC110	♦GSE	336 - 57
1.5KC110A	♦GSE	336 - 58
1.5KE6V8A	♦THEF	316 - 9
1.5KE6V8CA	♦THEF	316 - 10
1.5KE6V8CP	♦THEF	316 - 11
1.5KE6V8P	♦THEF	316 - 12
1.5KE6.8	♦GSE	336 - 59
	♦MOTA	
1.5KE6.8A	♦GSE	336 - 60
	♦MOTA	
1.5KE7V5A	♦THEF	316 - 13
1.5KE7V5CA	♦THEF	316 - 14
1.5KE7V5CP	♦THEF	316 - 15
1.5KE7V5P	♦THEF	316 - 16
1.5KE7.5	♦GSE	336 - 61
	♦MOTA	
1.5KE7.5A	♦GSE	336 - 62
	♦MOTA	
1.5KE7.5C	♦GSE	336 - 63
1.5KE7.5CA	♦GSE	336 - 64
1.5KE8V2A	♦THEF	316 - 17
1.5KE8V2CA	♦THEF	316 - 18
1.5KE8V2CP	♦THEF	316 - 19
1.5KE8V2P	♦THEF	316 - 20
1.5KE8.2	♦GSE	336 - 65
	♦MOTA	
1.5KE8.2A	♦GSE	336 - 66
	♦MOTA	
1.5KE8.2C	♦GSE	336 - 67
1.5KE8.2CA	♦GSE	336 - 68
1.5KE9V1A	♦THEF	316 - 21
1.5KE9V1CA	♦THEF	316 - 22
1.5KE9V1CP	♦THEF	316 - 23
1.5KE9V1P	♦THEF	316 - 24
1.5KE9.1	♦GSE	336 - 69
	♦MOTA	
1.5KE9.1A	♦GSE	336 - 70
	♦MOTA	
1.5KE9.1C	♦GSE	336 - 71
1.5KE9.1CA	♦GSE	336 - 72
1.5KE10	♦GSE	336 - 73
	♦MOTA	
1.5KE10A	♦GSE	336 - 74
♦MOTA	♦THEF	
1.5KE10C	♦GSE	336 - 75
1.5KE10CA	♦GSE	336 - 76
	♦THEF	
1.5KE10CP	♦THEF	316 - 25
1.5KE10P	♦THEF	316 - 26
1.5KE11	♦GSE	336 - 77
	♦MOTA	
1.5KE11A	♦GSE	336 - 78
♦MOTA	♦THEF	
1.5KE11C	♦GSE	336 - 79
1.5KE11CA	♦GSE	336 - 80
	♦THEF	
1.5KE11CP	♦THEF	316 - 27
1.5KE11P	♦THEF	316 - 28
1.5KE12	♦GSE	336 - 81
	♦MOTA	
1.5KE12A	♦GSE	336 - 82
♦MOTA	♦THEF	
1.5KE12CA	♦THEF	316 - 29
1.5KE12CP	♦THEF	316 - 30
1.5KE12P	♦THEF	316 - 31
1.5KE13	♦GSE	336 - 83
	♦MOTA	
1.5KE13A	♦GSE	336 - 84
♦MOTA	♦THEF	
1.5KE13CA	♦THEF	316 - 32
1.5KE13CP	♦THEF	316 - 33
1.5KE13P	♦THEF	316 - 34
1.5KE15	♦GSE	336 - 85
	♦MOTA	
1.5KE15A	♦GSE	336 - 86
♦MOTA	♦THEF	
1.5KE15CA	♦THEF	316 - 35
1.5KE15CP	♦THEF	316 - 36
1.5KE15P	♦THEF	316 - 37
1.5KE16	♦GSE	336 - 87
	♦MOTA	
1.5KE16A	♦GSE	336 - 88
♦MOTA	♦THEF	
1.5KE16CA	♦THEF	316 - 38
1.5KE16CP	♦THEF	316 - 39
1.5KE16P	♦THEF	316 - 40
1.5KE18	♦GSE	336 - 89
	♦MOTA	
1.5KE18A	♦GSE	336 - 90
♦MOTA	♦THEF	
1.5KE18CA	♦THEF	316 - 41
1.5KE18CP	♦THEF	316 - 42
1.5KE18P	♦THEF	316 - 43
1.5KE20	♦GSE	336 - 91
	♦MOTA	
1.5KE20A	♦GSE	336 - 92
♦MOTA	♦THEF	
1.5KE20CA	♦THEF	316 - 44
1.5KE20CP	♦THEF	316 - 45
1.5KE20P	♦THEF	316 - 46

TYPE No.	MFRS	Pg&Line
1.5KE22	♦GSE	336 - 93
	♦MOTA	
1.5KE22A	♦GSE	336 - 94
	♦MOTA	
1.5KE22CA	♦THEF	316 - 47
1.5KE22CP	♦THEF	316 - 48
1.5KE22P	♦THEF	316 - 49
1.5KE24	♦GSE	336 - 95
	♦MOTA	
1.5KE24A	♦GSE	336 - 96
	♦MOTA	
1.5KE24CA	♦THEF	316 - 50
1.5KE24CP	♦THEF	316 - 51
1.5KE24P	♦THEF	316 - 52
1.5KE27	♦GSE	336 - 97
	♦MOTA	
1.5KE27A	♦GSE	336 - 98
	♦MOTA	
1.5KE27CA	♦THEF	316 - 53
1.5KE27CP	♦THEF	316 - 54
1.5KE27P	♦THEF	316 - 55
1.5KE30	♦GSE	336 - 99
	♦MOTA	
1.5KE30A	♦GSE	336 -100
	♦MOTA	
1.5KE30CA	♦THEF	316 - 56
1.5KE30CP	♦THEF	316 - 57
1.5KE30P	♦THEF	316 - 58
1.5KE33	♦GSE	336 -101
	♦MOTA	
1.5KE33A	♦GSE	336 -102
	♦MOTA	
1.5KE33CA	♦THEF	316 - 59
1.5KE33CP	♦THEF	316 - 60
1.5KE33P	♦THEF	316 - 61
1.5KE36	♦GSE	336 -103
	♦MOTA	
1.5KE36A	♦GSE	336 -104
	♦MOTA	
1.5KE36CA	♦THEF	316 - 62
1.5KE36CP	♦THEF	316 - 63
1.5KE36P	♦THEF	316 - 64
1.5KE39	♦GSE	336 -105
	♦MOTA	
1.5KE39A	♦GSE	336 -106
	♦MOTA	
1.5KE39CA	♦THEF	316 - 65
1.5KE39CP	♦THEF	316 - 66
1.5KE39P	♦THEF	316 - 67
1.5KE43	♦GSE	336 -107
	♦MOTA	
1.5KE43A	♦GSE	336 -108
	♦MOTA	
1.5KE43CA	♦THEF	316 - 68
1.5KE43CP	♦THEF	316 - 69
1.5KE43P	♦THEF	316 - 70
1.5KE47	♦GSE	336 -109
	♦MOTA	
1.5KE47A	♦GSE	336 -110
	♦MOTA	
1.5KE47CA	♦THEF	316 - 71
1.5KE47CP	♦THEF	316 - 72
1.5KE47P	♦THEF	316 - 73
1.5KE51	♦GSE	337 - 1
	♦MOTA	
1.5KE51A	♦GSE	337 - 2
	♦MOTA	
1.5KE51CA	♦THEF	316 - 74
1.5KE51CP	♦THEF	316 - 75
1.5KE51P	♦THEF	316 - 76
1.5KE56	♦GSE	337 - 3
	♦MOTA	
1.5KE56A	♦GSE	337 - 4
	♦MOTA	
1.5KE56CA	♦THEF	316 - 77
1.5KE56CP	♦THEF	316 - 78
1.5KE56P	♦THEF	316 - 79
1.5KE62	♦GSE	337 - 5
	♦MOTA	
1.5KE62A	♦GSE	337 - 6
	♦MOTA	
1.5KE62CA	♦THEF	316 - 80
1.5KE62CP	♦THEF	316 - 81
1.5KE62P	♦THEF	316 - 82
1.5KE68	♦GSE	337 - 7
	♦MOTA	
1.5KE68A	♦GSE	337 - 8
	♦MOTA	
1.5KE68CA	♦THEF	316 - 83
1.5KE68CP	♦THEF	316 - 84
1.5KE68P	♦THEF	316 - 85
1.5KE75	♦GSE	337 - 9
	♦MOTA	
1.5KE75A	♦GSE	337 - 10
	♦MOTA	
1.5KE75CA	♦THEF	316 - 86
1.5KE75CP	♦THEF	316 - 87
1.5KE75P	♦THEF	316 - 88
1.5KE82	♦GSE	337 - 11
	♦MOTA	
1.5KE82A	♦GSE	337 - 12
	♦MOTA	
1.5KE82CA	♦THEF	316 - 89
1.5KE82CP	♦THEF	316 - 90
1.5KE82P	♦THEF	316 - 91
1.5KE91	♦GSE	337 - 13
	♦MOTA	
1.5KE91A	♦GSE	337 - 14
	♦MOTA	
1.5KE91CA	♦THEF	316 - 92
1.5KE91CP	♦THEF	316 - 93
1.5KE91P	♦THEF	316 - 94
1.5KE100	♦GSE	337 - 15
	♦MOTA	

TYPE No.	MFRS	Pg&Line
1.5KE100A	♦GSE	337 - 16
	♦MOTA	
1.5KE100CA	♦THEF	316 - 95
1.5KE100CP	♦THEF	316 - 96
1.5KE100P	♦THEF	316 - 97
1.5KE110	♦GSE	337 - 17
	♦MOTA	
1.5KE110A	♦GSE	337 - 18
	♦MOTA	
1.5KE110CA	♦THEF	316 - 98
1.5KE110CP	♦THEF	316 - 99
1.5KE110P	♦THEF	316 -100
1.5KE120	♦GSE	337 - 19
	♦MOTA	
1.5KE120A	♦GSE	337 - 20
	♦MOTA	
1.5KE120CA	♦THEF	316 -101
1.5KE120CP	♦THEF	316 -102
1.5KE120P	♦THEF	316 -103
1.5KE130	♦GSE	337 - 21
	♦MOTA	
1.5KE130A	♦GSE	337 - 22
	♦MOTA	
1.5KE130CA	♦THEF	316 -104
1.5KE130CP	♦THEF	316 -105
1.5KE130P	♦THEF	316 -106
1.5KE150	♦GSE	337 - 23
	♦MOTA	
1.5KE150A	♦GSE	337 - 24
	♦MOTA	
1.5KE160	♦GSE	337 - 25
	♦MOTA	
1.5KE160A	♦GSE	337 - 26
	♦MOTA	
1.5KE170	♦GSE	337 - 27
	♦MOTA	
1.5KE170A	♦GSE	337 - 28
	♦MOTA	
1.5KE180	♦GSE	337 - 29
	♦MOTA	
1.5KE180A	♦GSE	337 - 30
	♦MOTA	
1.5KE180CA	♦THEF	316 -107
1.5KE180CP	♦THEF	316 -108
1.5KE200	♦GSE	337 - 31
	♦MOTA	
1.5KE200A	♦GSE	337 - 32
	♦MOTA	
1.5KE200CA	♦THEF	316 -109
1.5KE200CP	♦THEF	316 -110
1.5KE200P	♦THEF	317 - 1
1.5KE220	♦GSE	337 - 33
1.5KE220A	♦GSE	337 - 34
	♦THEF	
1.5KE220CA	♦THEF	317 - 2
1.5KE220CP	♦THEF	317 - 3
1.5KE220P	♦THEF	317 - 4
1.5KE250	♦GSE	337 - 35
1.5KE250A	♦GSE	337 - 36
	♦THEF	
1.5KE250CA	♦THEF	317 - 5
1.5KE250CP	♦THEF	317 - 6
1.5KE250P	♦THEF	317 - 7
1.5KE280A	♦THEF	317 - 8
1.5KE280CA	♦THEF	317 - 9
1.5KE280CP	♦THEF	317 - 10
1.5KE280P	♦THEF	317 - 11
1.5KE300	♦GSE	337 - 37
1.5KE300A	♦GSE	337 - 38
	♦THEF	
1.5KE300CA	♦THEF	317 - 12
1.5KE300CP	♦THEF	317 - 13
1.5KE300P	♦THEF	317 - 14
1.5KE320A	♦THEF	317 - 15
1.5KE320CA	♦THEF	317 - 16
1.5KE320CP	♦THEF	317 - 17
1.5KE320P	♦THEF	317 - 18
1.5KE350	♦GSE	337 - 39
1.5KE350A	♦GSE	337 - 40
	♦THEF	
1.5KE350CA	♦THEF	317 - 19
1.5KE350CP	♦THEF	317 - 20
1.5KE350P	♦THEF	317 - 21
1.5KE400	♦GSE	337 - 41
1.5KE400A	♦GSE	337 - 42
	♦THEF	
1.5KE400CA	♦THEF	317 - 22
1.5KE400CP	♦THEF	317 - 23
1.5KE400P	♦THEF	317 - 24
1.5KE440A	♦THEF	317 - 25
1.5KE440CA	♦THEF	317 - 26
1.5KE440CP	♦THEF	317 - 27
1.5KE440P	♦THEF	317 - 28
1.5S220	♦SCN	337 - 43
1.5S220A	♦SCN	337 - 44
1.5S250	♦SCN	337 - 45
1.5S250A	♦SCN	337 - 46
1.5S300	♦SCN	337 - 47
1.5S300A	♦SCN	337 - 48
1.5S350	♦SCN	337 - 49
1.5S350A	♦SCN	337 - 50
1.5S400	♦SCN	337 - 51
1.5S400A	♦SCN	337 - 52
1.5SE6.8	♦SCN	317 - 29
1.5SE6.8A	♦SCN	317 - 30
1.5SE7.5	♦SCN	337 - 53
1.5SE7.5A	♦SCN	337 - 54
1.5SE8.2	♦SCN	337 - 55
1.5SE8.2A	♦SCN	337 - 56
1.5SE9.1	♦SCN	317 - 31
1.5SE9.1A	♦SCN	317 - 32
1.5SE10	♦SCN	337 - 57
1.5SE10A	♦SCN	317 - 33
1.5SE11	♦SCN	317 - 34

TYPE No.	MFRS	Pg&Line
1.5SE11A	♦SCN	317 - 35
1.5SE12	♦SCN	337 - 58
1.5SE12A	♦SCN	337 - 59
1.5SE13	♦SCN	337 - 60
1.5SE13A	♦SCN	337 - 61
1.5SE15	♦SCN	317 - 36
1.5SE15A	♦SCN	337 - 62
1.5SE16	♦SCN	317 - 37
1.5SE16A	♦SCN	317 - 38
1.5SE18	♦SCN	337 - 63
1.5SE18A	♦SCN	337 - 64
1.5SE20	♦SCN	337 - 65
1.5SE20A	♦SCN	337 - 66
1.5SE22	♦SCN	337 - 67
1.5SE22A	♦SCN	337 - 68
1.5SE24	♦SCN	317 - 39
1.5SE24A	♦SCN	317 - 40
1.5SE27	♦SCN	317 - 41
1.5SE27A	♦SCN	317 - 42
1.5SE30	♦SCN	317 - 43
1.5SE30A	♦SCN	337 - 69
1.5SE33	♦SCN	337 - 70
1.5SE33A	♦SCN	317 - 44
1.5SE36	♦SCN	337 - 71
1.5SE36A	♦SCN	317 - 45
1.5SE39	♦SCN	317 - 46
1.5SE39A	♦SCN	337 - 72
1.5SE43	♦SCN	317 - 47
1.5SE43A	♦SCN	337 - 73
1.5SE47	♦SCN	317 - 48
1.5SE47A	♦SCN	337 - 74
1.5SE51	♦SCN	317 - 49
1.5SE51A	♦SCN	317 - 50
1.5SE56	♦SCN	337 - 75
1.5SE56A	♦SCN	337 - 76
1.5SE62	♦SCN	317 - 51
1.5SE62A	♦SCN	337 - 77
1.5SE68	♦SCN	317 - 52
1.5SE68A	♦SCN	317 - 53
1.5SE75	♦SCN	337 - 78
1.5SE75A	♦SCN	337 - 79
1.5SE82	♦SCN	337 - 80
1.5SE82A	♦SCN	317 - 54
1.5SE91	♦SCN	337 - 81
1.5SE91A	♦SCN	337 - 82
1.5SE100	♦SCN	317 - 55
1.5SE100A	♦SCN	317 - 56
1.5SE110	♦SCN	317 - 57
1.5SE110A	♦SCN	317 - 58
1.5SE120	♦SCN	317 - 59
1.5SE120A	♦SCN	337 - 83
1.5SE130	♦SCN	317 - 60
1.5SE130A	♦SCN	317 - 61
1.5SE150	♦SCN	317 - 62
1.5SE150A	♦SCN	337 - 84
1.5SE160	♦SCN	317 - 63
1.5SE160A	♦SCN	317 - 64
1.5SE170	♦SCN	317 - 65
1.5SE170A	♦SCN	317 - 66
1.5SE180	♦SCN	317 - 67
1.5SE180A	♦SCN	317 - 68
1.5SE200	♦SCN	337 - 85
1.5SE200A	♦SCN	317 - 69
1.5SE220	♦SCN	337 - 86
1.5SE220A	♦SCN	337 - 87
1.5SE250	♦SCN	337 - 88
1.5SE250A	♦SCN	337 - 89
1.5SE300	♦SCN	337 - 90
1.5SE300A	♦SCN	337 - 91
1.5SE350	♦SCN	337 - 92
1.5SE350A	♦SCN	337 - 93
1.5SE400	♦SCN	337 - 94
1.5SE400A	♦SCN	337 - 95
02BZ2.2	IMTM	163 -175
	TOSJ	
02BZ2.7	IMTM	164 -138
	TOSJ	
02BZ3.3	IMTM	165 -194
	TOSJ	
02BZ3.9	IMTM	167 -130
	TOSJ	
02BZ4.7	IMTM	169 -171
	TOSJ	
02Z5.6A	IMTM	172 -115
	TOSJ	
02Z6.2A	IMTM	174 - 96
	TOSJ	
02Z6.8A	IMTM	177 -147
	TOSJ	
02Z7.5A	IMTM	179 -146
	TOSJ	
02Z8.2A	IMTM	181 -129
	TOSJ	
02Z9.1A	IMTM	184 -161
	TOSJ	
02Z10A	IMTM	186 -205
	TOSJ	
02Z11A	IMTM	188 -166
	TOSJ	
02Z12A	IMTM	190 -116
	TOSJ	
02Z13A	IMTM	192 -104
	TOSJ	
02Z15A	IMTM	194 -124
	TOSJ	
02Z16A	IMTM	196 - 34
	TOSJ	
02Z18A	IMTM	198 - 33
	TOSJ	
02Z20A	TOSJ	200 - 42
02Z22A	TOSJ	201 -141
02Z24A	IMTM	203 - 48
	TOSJ	
2-OA90-M	MATJ	233 -167

TYPE No.	MFRS	Pg&Line
2-OA90A-M	MATJ	233 -168
2-OA99	MATJ	233 -169
2-OA99A	MATJ	233 -170
2A1/18	♦SSI	244 -177
2A1/52	♦SSI	250 - 64
2A2/18	♦SSI	244 -178
2A2/52	♦SSI	250 - 65
2A5/18	♦SSI	244 -179
2A5/52	♦SSI	250 - 66
2A12/18	SSI	235 - 86
2A12/52	SSI	250 - 67
2A13/18	SSI	236 - 56
2A13/52	SSI	250 - 68
2A14/18	SSI	236 - 91
2A14/52	SSI	250 - 69
2A15/18	SSI	236 -162
2A15/52	SSI	250 - 70
2A16/18	SSI	236 -213
2A16/52	SSI	250 - 71
2A22/18	SSI	235 - 87
2A23/18	SSI	236 - 57
2A24/18	♦SSI	236 - 92
2A25/18	SSI	236 -163
2A26/18	SSI	236 -214
2A30	SOD	285 -195
2A50	SOD	285 -207
2A52/18	SSI	235 - 88
2A53/18	SSI	236 - 58
2A54/18	SSI	236 - 93
2A55/18	SSI	236 -164
2A56/18	SSI	236 -215
2A100	SOD	286 - 22
2A119	MISI	231 -107
2A200	SOD	286 - 62
2A300	SOD	286 - 89
2A400	SOD	286 -112
2A500	SOD	286 -138
2A600	SOD	286 -160
2A800	SOD	286 -198
2A1000	SOD	402 -107
2A1200	SOD	406 -102
2AA112#B	MISI	231 -108
2AA113#B	MISI	231 -117
2AA116	MISI	231 - 29
2AA117	MISI	231 -159
2AA118	MISI	231 -158
2AA119	CEI	233 - 37
2ASLD1	SOD	412 - 66
2ASLD2	SOD	415 - 64
2ASLD3	SOD	419 -147
2ASLD4	SOD	422 - 7
2ASLD5	SOD	423 -213
2ASLD6	SOD	425 - 2
2ASLD7	SOD	425 -104
2ASLD8	SOD	426 - 96
2ASLD9	SOD	426 -179
2ASLD10	SOD	427 -170
2ASLD10TRA	SOD	427 -168
2ASLD10TRB	SOD	427 -169
2ASLD15	SOD	429 -125
2ASLD15TR	SOD	429 -128
2ASLD20	SOD	430 -186
2ASLD25	SOD	431 -153
2ASLD30	SOD	432 - 83
2ASLD35	SOD	432 -132
2ASLD40	SOD	432 -187
2ASLD40TR	SOD	432 -193
2ASLD45	SOD	433 - 17
2ASLD50	SOD	433 - 63
2ASLD75	SOD	433 - 98
2ASLD100	SOD	433 -139
2ASLD120	SOD	433 -166
2ASPC1	SOD	412 - 67
2ASPC2	SOD	415 - 65
2ASPC3	SOD	419 -148
2ASPC4	SOD	422 - 8
2ASPC5	SOD	423 -214
2ASPC6	SOD	425 - 3
2ASPC7	SOD	425 -105
2ASPC8	SOD	426 - 97
2ASPC9	SOD	426 -180
2ASPC10	SOD	427 -171
2ASPC15	SOD	429 -126
2ASPC20	SOD	430 -187
2ASPC25	SOD	431 -154
2ASPC30	SOD	432 - 84
2ASPC35	SOD	432 -133
2ASPC40	SOD	432 -188
2ASPC45	SOD	433 - 18
2ASPC50	SOD	433 - 64
2ASPC75	SOD	433 - 99
2ASPC100	SOD	433 -140
2ASPC120	SOD	433 -167
2ASPF16	♦SOD	412 - 82
2ASPF20	♦SOD	415 - 86
2ASPF30	♦SOD	419 -165
2ASPF40	♦SOD	422 - 26
2ASPF50	♦SOD	424 - 23
2ASPF60	♦SOD	425 - 12
2ASPF70	♦SOD	425 -114
2ASPF80	♦SOD	426 -108
2ASPF90	♦SOD	426 -188
2ASPF100	♦SOD	427 -193
2ASPF150	♦SOD	429 -148
2ASPF200	♦SOD	430 -199
2ASPF250	♦SOD	431 -164
2ASPF300	♦SOD	432 - 92
2ASPF350	♦SOD	432 -141
2ASPF400	♦SOD	432 -199
2ASPF450	♦SOD	433 - 25
2ASPF500	♦SOD	433 - 69
2ASPF750	♦SOD	433 -106
2ASPF1000	♦SOD	433 -143
2ASPF1200	♦SOD	433 -170

Δ-Registered with JEDEC by this manufacturer

♦-Mfr's data sheet available in microfilm service

1. TYPE No. CROSS INDEX

IN TYPE NUMBER SEQUENCE

TYPE No.	MFRS	Pg&Line
2ASPS16	♦SOD	412 -108
2ASPS20	♦SOD	415 -118
2ASPS30	♦SOD	419 -186
2ASPS40	♦SOD	422 - 41
2ASPS50	♦SOD	424 - 49
2ASPS60	♦SOD	425 - 23
2ASPS70	♦SOD	425 -122
2ASPS80	♦SOD	426 -119
2ASPS90	♦SOD	426 -196
2ASPS100	♦SOD	427 -208
2ASPS150	♦SOD	429 -162
2ASPS200	♦SOD	430 -212
2ASPS250	♦SOD	431 -176
2ASPS300	♦SOD	432 -104
2ASPS350	♦SOD	432 -149
2ASPS400	♦SOD	432 -208
2ASPS450	♦SOD	433 - 33
2ASPS500	♦SOD	433 - 79
2ASPS750	♦SOD	433 -113
2ASPS1000	♦SOD	433 -152
2ASPS1200	♦SOD	433 -179
2ATPF16	♦SOD	412 - 91
2ATPF20	♦SOD	415 -103
2ATPF30	♦SOD	419 -175
2ATPF40	♦SOD	422 - 33
2ATPF50	♦SOD	424 - 39
2ATPF60	♦SOD	425 - 13
2ATPF70	♦SOD	425 -115
2ATPF80	♦SOD	426 -110
2ATPF90	♦SOD	426 -191
2ATPF100	♦SOD	427 -199
2ATPF150	♦SOD	429 -150
2ATPF200	♦SOD	430 -201
2ATPF250	♦SOD	431 -166
2ATPF300	♦SOD	432 - 94
2ATPF350	♦SOD	432 -142
2ATPF400	♦SOD	432 -201
2ATPF450	♦SOD	433 - 26
2ATPF500	♦SOD	433 - 74
2ATPF750	♦SOD	433 -108
2ATPF1000	♦SOD	433 -148
2ATPF1200	♦SOD	433 -174
2ATPH16	♦SOD	412 - 92
2ATPH20	♦SOD	415 -104
2ATPH30	♦SOD	419 -176
2ATPH40	♦SOD	422 - 34
2ATPH50	♦SOD	424 - 40
2ATPH60	♦SOD	425 - 14
2ATPH70	♦SOD	425 -116
2ATPH80	♦SOD	426 -111
2ATPH90	♦SOD	426 -192
2ATPH100	♦SOD	427 -200
2ATPH150	♦SOD	429 -151
2ATPH200	♦SOD	430 -202
2ATPH250	♦SOD	431 -167
2ATPH300	♦SOD	432 - 95
2ATPH350	♦SOD	432 -143
2ATPH400	♦SOD	432 -202
2ATPH450	♦SOD	433 - 27
2ATPH500	♦SOD	433 - 75
2ATPH750	♦SOD	433 -109
2ATPH1000	♦SOD	433 -149
2ATPH1200	♦SOD	433 -175
2B1/18	♦SSI	244 -180
2B1/52	♦SSI	250 - 72
2B2/18	♦SSI	244 -181
2B2/52	♦SSI	250 - 73
2B4B41	TOSJ	362 -131
2B5/18	♦SSI	244 -182
2B5/52	♦SSI	250 - 74
2B12/18	SSI	235 - 89
2B13/18	SSI	236 - 59
2B14/18	SSI	236 - 94
2B15/18	SSI	236 -165
2B16/18	SSI	236 -216
2B22/18	SSI	235 - 90
2B23/18	SSI	236 - 60
2B24/18	SSI	236 - 95
2B25/18	SSI	236 -166
2B26/18	SSI	236 -217
2B52/18	SSI	235 - 91
2B53/18	SSI	236 - 61
2B54/18	SSI	236 - 96
2B55/18	SSI	236 -167
2B56/18	SSI	236 -218
2C1/18	♦SSI	244 -191
2C1/52	♦SSI	250 - 75
2C2/18	♦SSI	244 -192
2C2/52	♦SSI	250 - 76
2C05/18	♦SSI	244 -193
2C05/52	♦SSI	250 - 77
2C14/18	SSI	236 - 97
2C15/18	SSI	236 -168
2C16/18	SSI	237 - 1
2C17/18	SSI	237 - 37
2C24/18	SSI	236 - 98
2C25/18	SSI	236 -169
2C26/18	SSI	237 - 2
2C27/18	SSI	237 - 38
2C054/18	SSI	236 - 99
2C055/18	SSI	236 -170
2C056/18	SSI	237 - 3
2C057/18	SSI	237 - 39
2D4B41	TOSJ	362 -134
2DL15A	INRJ	247 -210
2DL18A	INRJ	247 -215
2DS506	LUCB	291 - 5
2EZ3.6D	MSC	167 - 73
2EZ3.6D10	MSC	167 - 70
2EZ3.6D5	♦MSC	167 - 66
	SIEG	
2EZ3.9D	MSC	168 - 58
2EZ3.9D10	MSC	168 - 55

TYPE No.	MFRS	Pg&Line
2EZ3.9D5	♦MSC	168 - 51
	SIEG	
2EZ4.3D	MSC	169 - 78
2EZ4.3D10	MSC	169 - 75
2EZ4.3D5	♦MSC	169 - 71
	SIEG	
2EZ4.7D	MSC	170 -135
2EZ4.7D10	MSC	170 -132
2EZ4.7D5	♦MSC	170 -128
	SIEG	
2EZ5.1D	MSC	172 - 8
2EZ5.1D10	MSC	172 - 5
2EZ5.1D5	♦MSC	172 - 1
	SIEG	
2EZ5.6D	MSC	173 -106
2EZ5.6D10	MSC	173 -103
2EZ5.6D5	♦MSC	173 - 98
	SIEG	
2EZ6.2D	MSC	175 -171
2EZ6.2D10	MSC	175 -168
2EZ6.2D5	♦MSC	175 -163
	SIEG	
2EZ6.8D	MSC	178 -177
2EZ6.8D10	MSC	178 -174
2EZ6.8D5	♦MSC	178 -168
	SIEG	
2EZ7.5D	MSC	180 -169
2EZ7.5D10	MSC	180 -166
2EZ7.5D5	♦MSC	180 -160
	SIEG	
2EZ8.2D	MSC	182 -158
2EZ8.2D10	MSC	182 -155
2EZ8.2D5	♦MSC	182 -149
	SIEG	
2EZ9.1D	MSC	185 -193
2EZ9.1D10	MSC	185 -190
2EZ9.1D5	♦MSC	185 -184
	SIEG	
2EZ10D5	♦MSC	188 - 48
	SIEG	
2EZ10D10	MSC	188 - 54
2EZ10D	MSC	188 - 57
2EZ11D5	♦MSC	189 -161
	SIEG	
2EZ11D10	MSC	189 -167
2EZ11D	MSC	189 -170
2EZ12D5	♦MSC	191 -136
	SIEG	
2EZ12D10	MSC	191 -142
2EZ12D	MSC	191 -145
2EZ13D5	♦MSC	193 - 78
	SIEG	
2EZ13D10	MSC	193 - 84
2EZ13D	MSC	193 - 87
2EZ14D5	♦MSC	194 - 23
	SIEG	
2EZ14D10	MSC	194 - 28
2EZ14D	MSC	194 - 31
2EZ15D5	♦MSC	195 -133
	SIEG	
2EZ15D10	MSC	195 -139
2EZ15D	MSC	195 -142
2EZ16D5	♦MSC	197 - 15
	SIEG	
2EZ16D10	MSC	197 - 19
2EZ16D	MSC	197 - 21
2EZ17D5	♦MSC	197 -141
	SIEG	
2EZ17D10	MSC	197 -144
2EZ17D	MSC	197 -146
2EZ18D5	♦MSC	199 - 31
	SIEG	
2EZ18D10	MSC	199 - 37
2EZ18D	MSC	199 - 40
2EZ19D5	♦MSC	199 -144
	SIEG	
2EZ19D10	MSC	199 -147
2EZ19D	MSC	199 -149
2EZ20D5	♦MSC	201 - 24
	SIEG	
2EZ20D10	MSC	201 - 30
2EZ20D	MSC	201 - 33
2EZ22D5	♦MSC	202 -131
	SIEG	
2EZ22D10	MSC	202 -137
2EZ22D	MSC	202 -140
2EZ24D5	♦MSC	204 - 17
	SIEG	
2EZ24D10	MSC	204 - 23
2EZ24D	MSC	204 - 26
2EZ27D5	♦MSC	205 -171
	SIEG	
2EZ27D10	MSC	205 -177
2EZ27D	MSC	205 -180
2EZ30D5	♦MSC	207 - 95
	SIEG	
2EZ30D10	MSC	207 -101
2EZ30D	MSC	207 -104
2EZ33D5	♦MSC	208 -188
	SIEG	
2EZ33D10	MSC	208 -194
2EZ33D	MSC	208 -197
2EZ36D5	♦MSC	210 - 37
	SIEG	
2EZ36D10	MSC	210 - 43
2EZ36D	MSC	210 - 46
2EZ39D5	♦MSC	211 - 74
	SIEG	
2EZ39D10	MSC	211 - 80
2EZ39D	MSC	211 - 83
2EZ43D5	♦MSC	212 - 85
	SIEG	
2EZ43D10	MSC	212 - 91
2EZ43D	MSC	212 - 94

TYPE No.	MFRS	Pg&Line
2EZ47D5	♦MSC	213 -102
	SIEG	
2EZ47D10	MSC	213 -108
2EZ47D	MSC	213 -111
2EZ51D5	♦MSC	214 - 97
	SIEG	
2EZ51D10	MSC	214 -103
2EZ51D	MSC	214 -106
2EZ56D5	♦MSC	215 - 86
	SIEG	
2EZ56D10	MSC	215 - 92
2EZ56D	MSC	215 - 95
2EZ62D5	♦MSC	216 - 90
	SIEG	
2EZ62D10	♦MSC	216 - 96
2EZ62D	MSC	216 - 99
2EZ68D5	♦MSC	217 - 71
	SIEG	
2EZ68D10	MSC	217 - 77
2EZ68D	MSC	217 - 80
2EZ75D5	♦MSC	218 - 54
	SIEG	
2EZ75D10	MSC	218 - 60
2EZ75D	MSC	218 - 63
2EZ82D5	♦MSC	219 - 30
	SIEG	
2EZ82D10	MSC	219 - 36
2EZ82D	MSC	219 - 39
2EZ91D5	♦MSC	220 - 9
	SIEG	
2EZ91D10	MSC	220 - 15
2EZ91D	MSC	220 - 18
2EZ100D5	♦MSC	220 -171
	SIEG	
2EZ100D10	MSC	220 -177
2EZ100D	MSC	220 -180
2EZ110D5	♦MSC	221 -131
	SIEG	
2EZ110D10	MSC	221 -137
2EZ110D	MSC	221 -140
2EZ120D5	♦MSC	222 - 85
	SIEG	
2EZ120D10	MSC	222 - 91
2EZ120D	MSC	222 - 94
2EZ130D5	♦MSC	223 - 36
	SIEG	
2EZ130D10	MSC	223 - 42
2EZ130D	MSC	223 - 45
2EZ140D5	♦MSC	223 -110
	SIEG	
2EZ140D10	MSC	223 -113
2EZ140D	MSC	223 -115
2EZ150D5	♦MSC	224 - 70
	SIEG	
2EZ150D10	MSC	224 - 76
2EZ150D	MSC	224 - 79
2EZ160D5	♦MSC	225 - 9
	SIEG	
2EZ160D10	MSC	225 - 15
2EZ160D	MSC	225 - 18
2EZ170D5	♦MSC	225 - 82
	SIEG	
2EZ170D10	MSC	225 - 83
2EZ170D	MSC	225 - 84
2EZ180D5	♦MSC	226 - 31
	SIEG	
2EZ180D10	MSC	226 - 37
2EZ180D	MSC	226 - 40
2EZ190D5	♦MSC	226 - 95
	SIEG	
2EZ190D10	MSC	226 - 96
2EZ190D	MSC	226 - 97
2EZ200D5	♦MSC	227 - 24
	SIEG	
2EZ200D10	MSC	227 - 30
2EZ200D	MSC	227 - 33
2E.5	SSI	251 -161
2FB050	♦CODI	362 -169
2FB050R	♦CODI	362 -170
2FB100	♦CODI	362 -207
2FB100R	♦CODI	362 -208
2FB200	♦CODI	363 - 39
2FB200R	♦CODI	363 - 40
2FB400	♦CODI	363 - 88
2FB400R	♦CODI	363 - 89
2FB600	♦CODI	363 -132
2FB600R	♦CODI	363 -133
2FB800	♦CODI	363 -170
2FB800R	♦CODI	363 -171
2FB1000	♦CODI	363 -201
2FB1000R	♦CODI	363 -202
2G1	♦SOD	286 - 5
2G2	♦SOD	286 - 63
2G4	♦SOD	286 -113
2G4B41	TOSJ	362 -138
2G6	♦SOD	286 -161
2G8	CEI	278 - 67
2G8#B	♦SOD	286 -199
2G10	♦SOD	402 -108
2J4B41	TOSJ	362 -140
2KBP01	♦FEC	362 -209
2KBP02	♦FEC	363 - 41
	♦GIC	
2KBP04	♦FEC	363 - 90
	♦GIC	
2KBP005	♦FEC	362 -171
	♦GIC	
2KBP06	♦FEC	363 -134
	♦GIC	
2KBP08	♦FEC	363 -172
	♦GIC	
2KBP10	♦FEC	363 -203
	♦GIC	
2KZ6.8	♦SAR	317 - 70

TYPE No.	MFRS	Pg&Line
2KZ6.8A	♦SAR	317 - 71
2KZ6.8B	♦SAR	317 - 72
2KZ7.5	♦SAR	317 - 73
2KZ7.5A	♦SAR	317 - 74
2KZ7.5B	♦SAR	317 - 75
2KZ8.2	♦SAR	317 - 76
2KZ8.2A	♦SAR	317 - 77
2KZ8.2B	♦SAR	317 - 78
2KZ9	♦SAR	317 - 79
2KZ9A	♦SAR	317 - 80
2KZ9B	♦SAR	317 - 81
2KZ9.1	♦SAR	317 - 82
2KZ9.1A	♦SAR	317 - 83
2KZ10	♦SAR	317 - 84
2KZ10A	♦SAR	317 - 85
2KZ10B	♦SAR	317 - 86
2KZ11	♦SAR	317 - 87
2KZ11A	♦SAR	317 - 88
2KZ11B	♦SAR	317 - 89
2KZ12	♦SAR	317 - 90
2KZ12A	♦SAR	317 - 91
2KZ12B	♦SAR	317 - 92
2KZ13	♦SAR	317 - 93
2KZ13A	♦SAR	317 - 94
2KZ13B	♦SAR	317 - 95
2KZ15	♦SAR	317 - 96
2KZ15A	♦SAR	317 - 97
2KZ15B	♦SAR	317 - 98
2KZ16	♦SAR	317 - 99
2KZ16A	♦SAR	317 -100
2KZ16B	♦SAR	317 -101
2KZ18	♦SAR	317 -102
2KZ18A	♦SAR	317 -103
2KZ18B	♦SAR	317 -104
2KZ20	♦SAR	317 -105
2KZ20A	♦SAR	444 - 10
2KZ20B	♦SAR	444 - 11
2KZ22	♦SAR	444 - 12
2KZ22A	♦SAR	444 - 13
2KZ22B	♦SAR	444 - 14
2KZ24	♦SAR	444 - 15
2KZ24A	♦SAR	444 - 16
2KZ24B	♦SAR	444 - 17
2KZ27	♦SAR	444 - 18
2KZ27A	♦SAR	444 - 19
2KZ27B	♦SAR	444 - 20
2KZ30	♦SAR	444 - 21
2KZ30A	♦SAR	444 - 22
2KZ30B	♦SAR	444 - 23
2KZ33	♦SAR	444 - 24
2KZ33A	♦SAR	444 - 25
2KZ33B	♦SAR	444 - 26
2KZ36	♦SAR	444 - 27
2KZ36A	♦SAR	444 - 28
2KZ36B	♦SAR	444 - 29
2KZ39	♦SAR	444 - 30
2KZ39A	♦SAR	444 - 31
2KZ39B	♦SAR	444 - 32
2KZ43	♦SAR	444 - 33
2KZ43A	♦SAR	444 - 34
2KZ43B	♦SAR	317 -106
2KZ47	♦SAR	317 -107
2KZ47A	♦SAR	317 -108
2KZ47B	♦SAR	317 -109
2KZ51	♦SAR	317 -110
2KZ51A	♦SAR	318 - 1
2KZ51B	♦SAR	318 - 2
2KZ56	♦SAR	318 - 3
2KZ56A	♦SAR	318 - 4
2KZ56B	♦SAR	318 - 5
2KZ62	♦SAR	318 - 6
2KZ62A	♦SAR	444 - 35
2KZ62B	♦SAR	318 - 7
2KZ68	♦SAR	318 - 8
2KZ68A	♦SAR	318 - 9
2KZ68B	♦SAR	318 - 10
2KZ75	♦SAR	318 - 11
2KZ75A	♦SAR	318 - 12
2KZ75B	♦SAR	318 - 13
2KZ82	♦SAR	318 - 14
2KZ82A	♦SAR	318 - 15
2KZ82B	♦SAR	318 - 16
2KZ90	♦SAR	318 - 17
2KZ90A	♦SAR	444 - 36
2KZ90B	♦SAR	318 - 18
2KZ91	♦SAR	318 - 19
2KZ91A	♦SAR	318 - 20
2KZ100	♦SAR	318 - 21
2KZ100A	♦SAR	318 - 22
2KZ100B	♦SAR	318 - 23
2KZ110	♦SAR	318 - 24
2KZ110A	♦SAR	318 - 25
2KZ110B	♦SAR	318 - 26
2KZ120	♦SAR	318 - 27
2KZ120A	♦SAR	318 - 28
2KZ120B	♦SAR	318 - 29
2KZ130	♦SAR	318 - 30
2KZ130A	♦SAR	318 - 31
2KZ130B	♦SAR	318 - 32
2KZ150	♦SAR	318 - 33
2KZ150A	♦SAR	318 - 34
2KZ150B	♦SAR	318 - 35
2KZ160	♦SAR	318 - 36
2KZ160A	♦SAR	318 - 37
2KZ160B	♦SAR	318 - 38
2KZ170	♦SAR	318 - 39
2KZ170A	♦SAR	318 - 40
2KZ170B	♦SAR	318 - 41
2KZ180	♦SAR	318 - 42
2KZ180A	♦SAR	318 - 43
2KZ180B	♦SAR	444 - 37
2KZ200	♦SAR	444 - 38
2KZ200A	♦SAR	444 - 39
2KZ200B	♦SAR	444 - 40

TYPE No.	MFRS	Pg&Line
2L15	EDL	410 -201
2L20	EDL	414 -178
2L25	EDL	417 -103
2L30	EDL	419 - 44
2L35	EDL	420 -170
2L40	EDL	421 -129
2L45	EDL	422 -185
2L50	EDL	423 - 69
2L55	EDL	424 - 89
2L60	EDL	424 -123
2L65	EDL	425 - 34
2L70	EDL	425 - 60
2L75	EDL	425 -132
2L80	EDL	426 - 3
2L85	EDL	426 -137
2L90	EDL	426 -151
2L95	EDL	426 -198
2L100	EDL	427 - 26
2L110	EDL	428 - 1
2L120	EDL	428 - 48
2L130	EDL	428 -160
2L140	EDL	428 -189
2L150	EDL	429 - 26
2L160	EDL	429 -180
2L170	EDL	430 - 13
2L180	EDL	430 - 46
2L190	EDL	430 - 71
2L200	EDL	430 -118
2L210	EDL	431 - 2
2L220	EDL	431 - 16
2L230	EDL	431 - 36
2L240	EDL	431 - 51
2L250	EDL	431 - 91
2L260	EDL	431 -179
2L270	EDL	431 -196
2L280	EDL	431 -208
2L290	EDL	432 - 6
2L300	EDL	432 - 34
2OA90	MISI	231 -109
2R0/18	SSI	251 -162
2R1/18	SSI	251 -163
2R1/52	♦SSI	257 - 91
2R2/18	SSI	238 - 32
2R2B	♦SSI	251 -164
2R2S	SSI	251 -165
2R3B	♦SSI	251 -166
2R3S	SSI	251 -167
2R4C	♦SSI	251 -168
2R4S	SSI	251 -169
2R5C	♦SSI	251 -170
2R5S	SSI	251 -171
2R6C	♦SSI	251 -172
2R6S	SSI	251 -173
2R7CD	SSI	251 -174
2R7S	♦SSI	304 -212
2R8CD	SSI	251 -175
2R8S	SSI	251 -176
2R52	SSI	257 - 92
2RE52	♦SSI	291 - 94
2SB50	♦CODI	362 -172
2SB100	♦CODI	363 - 1
2SB200	♦CODI	363 - 42
2SB400	♦CODI	363 - 91
2SB600	♦CODI	363 -135
2SB800	CODI	363 -173
2SB1000	CODI	363 -204
2SBF20	CODI	363 - 28
2SBF40	CODI	363 - 76
2SBF60	CODI	363 -123
2SBF80	CODI	363 -163
2SBF100	CODI	363 -197
2SD2A	SELI	442 - 27
2SFD111	MISI	231 - 82
2SM1	♦SELI	280 -129
2SM3	♦SELI	288 - 64
2SM6	♦SELI	291 -191
2SM15	♦SELI	296 - 74
2SM25	♦SELI	298 -172
2SM40	♦SELI	301 -126
2SM55	♦SELI	303 - 43
2SM70	♦SELI	304 - 57
2SM100	♦SELI	305 -203
2SM150	♦SELI	307 - 81
2SM200	♦SELI	308 -157
2VR5.6,A,B	SAR	173 - 99
2VR6,A,B	SAR	174 - 24
2VR6.2,A,B	SAR	175 -164
2VR6.8,A,B	SAR	178 -169
2VR7,A,B	SAR	179 - 26
2VR7.5,A,B	SAR	180 -161
2VR8.2,A,B	SAR	182 -150
2VR8.5,A,B	SAR	183 -105
2VR9.1,A,B	SAR	185 -185
2VR10,A,B	SAR	188 - 49
2VR11,A,B	SAR	189 -162
2VR12,A,B	SAR	191 -137
2VR13,A,B	SAR	193 - 79
2VR14,A,B	SAR	194 - 24
2VR15,A,B	SAR	195 -134
2VR16,A,B	SAR	197 - 16
2VR18,A,B	SAR	199 - 32
2VR20,A,B	SAR	201 - 25
2VR22,A,B	SAR	202 -132
2VR24,A,B	SAR	204 - 18
2VR27,A,B	SAR	205 -172
2VR28,A,B	SAR	206 - 56
2VR30,A,B	SAR	207 - 96
2VR33,A,B	SAR	208 -189
2VR36,A,B	SAR	210 - 38
2VR39,A,B	SAR	211 - 75
2VR43,A,B	SAR	212 - 86
2VR47,A,B	SAR	213 -103
2VR51,A,B	SAR	214 - 98
2VR56,A,B	SAR	215 - 87

Δ-Registered with JEDEC by this manufacturer

♦-Mfr's data sheet available in microfilm service

1. TYPE No. CROSS INDEX

IN TYPE NUMBER SEQUENCE

TYPE No.	MFRS	Pg&Line
2VR62,A,B	SAR	216 - 91
2VR67,A,B	SAR	216 -132
2VR68,A,B	SAR	217 - 72
2VR75,A,B	SAR	218 - 55
2VR80,A,B	SAR	218 -104
2VR82,A,B	SAR	219 - 31
2VR90,A,B	SAR	219 - 94
2VR91,A,B	SAR	220 - 10
2VR100,A,B	SAR	220 -172
2VR105,A,B	SAR	221 - 25
2VR110,A,B	SAR	221 -132
2VR120,A,B	SAR	222 - 86
2VR130,A,B	SAR	223 - 37
2VR150,A,B	SAR	224 - 71
2VR160,A,B	SAR	225 - 10
2VR180,A,B	SAR	226 - 32
2VR200,A,B	SAR	227 - 25
2W01	♦DII	361 -161
2W01G	♦DII	363 - 2
2W02	♦DII	363 - 29
	♦GIC	
2W02G	♦DII	363 - 43
2W04	♦DII	363 - 77
	♦GIC	
2W04G	♦DII	363 - 92
2W005	♦DII	362 -163
	♦GIC	
2W005G	♦DII	362 -173
2W06	♦DII	363 -124
	♦GIC	
2W06G	♦DII	363 -136
2W08	♦DII	363 -164
	♦GIC	
2W08G	♦DII	363 -174
2W10	♦DII	362 -111
2W10G	♦DII	363 -205
3A15	♦SOD	287 -148
3A30	♦SOD	287 -156
3A50	♦SOD	287 -179
3A50FS	SOD	287 -180
3A100	♦SOD	288 - 17
3A100FS	SOD	288 - 18
3A200	♦SOD	288 - 94
3A200FS	SOD	288 - 95
3A300	♦SOD	288 -149
3A300FS	SOD	288 -150
3A400	♦SOD	288 -192
3A400FS	SOD	288 -193
3A500	♦SOD	289 - 20
3A500FS	SOD	289 - 21
3A600	♦SOD	289 - 59
3A600FS	SOD	289 - 60
3A700	SOD	289 -101
3A700FS	SOD	289 -102
3A800	♦SOD	289 -129
3A800FS	SOD	289 -130
3A900	SOD	289 -168
3A900FS	SOD	289 -169
3A1000	♦SOD	402 -166
3A1000FS	SOD	402 -167
3A1100	SOD	405 - 76
3A1100FS	SOD	405 - 77
3A1200	♦SOD	406 -122
3A1200FS	SOD	406 -123
3A1300	SOD	408 -200
3A1300FS	SOD	408 -201
3AF2	SAR	288 - 73
3AF4	SAR	288 -142
3AF6	SAR	289 - 39
3AF8	SAR	289 -114
3B4B41	TOSJ	362 -201
3BZ61	♦TOSJ	288 - 43
3C50	SOD	287 -181
3C100	SOD	288 - 19
3C200	SOD	288 - 96
3C300	SOD	288 -151
3C400	SOD	288 -194
3C500	SOD	289 - 22
3C600	SOD	289 - 61
3C800	SOD	289 -131
3C1000	SOD	402 -168
3C1200	SOD	406 -124
3CC13	♦TOSJ	288 - 59
3CD13	♦TOSJ	288 - 60
3D4B41	TOSJ	363 - 33
3DD10	♦CODI	233 - 19
3DD15	♦CODI	233 - 20
3DD20	♦CODI	233 - 21
3DD25	♦CODI	233 - 22
3DD30	♦CODI	233 - 23
3DF10	♦CODI	241 -121
3DF12	♦CODI	241 -128
3DF15	♦CODI	241 -138
3DF20	♦CODI	241 -157
3DF25	♦CODI	241 -163
3DF30	♦CODI	241 -179
3DH61	TOSJ	248 -116
3DZ61	♦TOSJ	288 -123
3E1	DII	288 - 40
3E2	DII	288 -120
3E4	DII	288 -218
3E05	DII	287 -200
3E6	DII	289 - 80
3E8	DII	289 -148
3E10	DII	402 -181
3EZ3.9D	MSC	168 - 72
3EZ3.9D1	♦MSC	168 - 63
3EZ3.9D10	MSC	168 - 70
3EZ3.9D2	♦MSC	168 - 64
3EZ3.9D3	♦MSC	168 - 65
3EZ3.9D4	♦MSC	168 - 66
3EZ3.9D5	♦MSC	168 - 67
	SIEG	
3EZ4.3D	MSC	169 - 92

TYPE No.	MFRS	Pg&Line
3EZ4.3D1	♦MSC	169 - 83
3EZ4.3D10	MSC	169 - 90
3EZ4.3D2	♦MSC	169 - 84
3EZ4.3D3	♦MSC	169 - 85
3EZ4.3D4	♦MSC	169 - 86
3EZ4.3D5	♦MSC	169 - 87
	SIEG	
3EZ4.7D	MSC	170 -149
3EZ4.7D1	♦MSC	170 -140
3EZ4.7D10	MSC	170 -147
3EZ4.7D2	♦MSC	170 -141
3EZ4.7D3	♦MSC	170 -142
3EZ4.7D4	♦MSC	170 -143
3EZ4.7D5	♦MSC	170 -144
	SIEG	
3EZ5.1D	MSC	172 - 23
3EZ5.1D1	♦MSC	172 - 14
3EZ5.1D10	MSC	172 - 21
3EZ5.1D2	♦MSC	172 - 15
3EZ5.1D3	♦MSC	172 - 16
3EZ5.1D4	♦MSC	172 - 17
3EZ5.1D5	♦MSC	172 - 18
	SIEG	
3EZ5.6D	MSC	173 -121
3EZ5.6D1	♦MSC	173 -111
3EZ5.6D10	MSC	173 -119
3EZ5.6D2	♦MSC	173 -112
3EZ5.6D3	♦MSC	173 -113
3EZ5.6D4	♦MSC	173 -114
3EZ5.6D5	♦MSC	173 -115
	SIEG	
3EZ6.2D	MSC	175 -186
3EZ6.2D1	♦MSC	175 -176
3EZ6.2D10	MSC	175 -184
3EZ6.2D2	♦MSC	175 -177
3EZ6.2D3	♦MSC	175 -178
3EZ6.2D4	♦MSC	175 -179
3EZ6.2D5	♦MSC	175 -180
	SIEG	
3EZ6.8D	MSC	178 -197
3EZ6.8D1	♦MSC	178 -181
3EZ6.8D10	MSC	178 -193
3EZ6.8D2	♦MSC	178 -182
3EZ6.8D3	♦MSC	178 -183
3EZ6.8D4	♦MSC	178 -184
3EZ6.8D5	♦MSC	178 -186
	SIEG	
3EZ7.5D	MSC	180 -191
3EZ7.5D1	♦MSC	180 -174
3EZ7.5D10	MSC	180 -187
3EZ7.5D2	♦MSC	180 -175
3EZ7.5D3	♦MSC	180 -176
3EZ7.5D4	♦MSC	180 -177
3EZ7.5D5	♦MSC	180 -179
	SIEG	
3EZ8.2D	MSC	182 -181
3EZ8.2D1	♦MSC	182 -164
3EZ8.2D10	MSC	182 -177
3EZ8.2D2	♦MSC	182 -165
3EZ8.2D3	♦MSC	182 -166
3EZ8.2D4	♦MSC	182 -167
3EZ8.2D5	♦MSC	182 -169
	SIEG	
3EZ9.1D	MSC	186 - 12
3EZ9.1D1	♦MSC	185 -198
3EZ9.1D10	MSC	186 - 8
3EZ9.1D2	♦MSC	185 -199
3EZ9.1D3	♦MSC	185 -200
3EZ9.1D4	♦MSC	185 -201
3EZ9.1D5	♦MSC	185 -203
	SIEG	
3EZ10D1	♦MSC	188 - 64
3EZ10D2	♦MSC	188 - 65
3EZ10D3	♦MSC	188 - 66
3EZ10D4	♦MSC	188 - 67
3EZ10D5	♦MSC	188 - 69
	SIEG	
3EZ10D10	MSC	188 - 77
3EZ10D	MSC	188 - 81
3EZ11D1	♦MSC	189 -177
3EZ11D2	♦MSC	189 -178
3EZ11D3	♦MSC	189 -179
3EZ11D4	♦MSC	189 -180
3EZ11D5	♦MSC	189 -182
	SIEG	
3EZ11D10	MSC	189 -188
3EZ11D	MSC	189 -191
3EZ12D1	♦MSC	191 -152
3EZ12D2	♦MSC	191 -153
3EZ12D3	♦MSC	191 -154
3EZ12D4	♦MSC	191 -155
3EZ12D5	♦MSC	191 -157
	SIEG	
3EZ12D10	MSC	191 -165
3EZ12D	MSC	191 -169
3EZ13D1	♦MSC	193 - 93
3EZ13D2	♦MSC	193 - 94
3EZ13D3	♦MSC	193 - 95
3EZ13D4	♦MSC	193 - 96
3EZ13D5	♦MSC	193 - 98
	SIEG	
3EZ13D10	MSC	193 -105
3EZ13D	MSC	193 -109
3EZ14D1	♦MSC	194 - 34
3EZ14D2	♦MSC	194 - 35
3EZ14D3	♦MSC	194 - 36
3EZ14D4	♦MSC	194 - 37
3EZ14D5	♦MSC	194 - 39
	SIEG	
3EZ14D10	MSC	194 - 44
3EZ14D	MSC	194 - 48
3EZ15D1	♦MSC	195 -148
3EZ15D2	♦MSC	195 -149
3EZ15D3	♦MSC	195 -150

TYPE No.	MFRS	Pg&Line
3EZ15D4	♦MSC	195 -151
3EZ15D5	♦MSC	195 -153
	SIEG	
3EZ15D10	MSC	195 -161
3EZ15D	MSC	195 -165
3EZ16D1	♦MSC	197 - 27
3EZ16D2	♦MSC	197 - 28
3EZ16D3	♦MSC	197 - 29
3EZ16D4	♦MSC	197 - 30
3EZ16D5	♦MSC	197 - 32
	SIEG	
3EZ16D10	MSC	197 - 37
3EZ16D	MSC	197 - 40
3EZ17D1	♦MSC	197 -149
3EZ17D2	♦MSC	197 -150
3EZ17D3	♦MSC	197 -151
3EZ17D4	♦MSC	197 -152
3EZ17D5	♦MSC	197 -153
	SIEG	
3EZ17D10	MSC	197 -156
3EZ17D	MSC	197 -158
3EZ18D1	♦MSC	199 - 47
3EZ18D2	♦MSC	199 - 48
3EZ18D3	♦MSC	199 - 49
3EZ18D4	♦MSC	199 - 50
3EZ18D5	♦MSC	199 - 52
	SIEG	
3EZ18D10	MSC	199 - 60
3EZ18D	MSC	199 - 65
3EZ19D1	♦MSC	199 -153
3EZ19D2	♦MSC	199 -154
3EZ19D3	♦MSC	199 -155
3EZ19D4	♦MSC	199 -156
3EZ19D5	♦MSC	199 -157
	SIEG	
3EZ19D10	MSC	199 -160
3EZ19D	MSC	199 -162
3EZ20D1	♦MSC	201 - 40
3EZ20D2	♦MSC	201 - 41
3EZ20D3	♦MSC	201 - 42
3EZ20D4	♦MSC	201 - 43
3EZ20D5	♦MSC	201 - 45
	SIEG	
3EZ20D10	MSC	201 - 54
3EZ20D	MSC	201 - 58
3EZ22D1	♦MSC	202 -146
3EZ22D2	♦MSC	202 -147
3EZ22D3	♦MSC	202 -148
3EZ22D4	♦MSC	202 -149
3EZ22D5	♦MSC	202 -151
	SIEG	
3EZ22D10	MSC	202 -158
3EZ22D	MSC	202 -162
3EZ24D1	♦MSC	204 - 33
3EZ24D2	♦MSC	204 - 34
3EZ24D3	♦MSC	204 - 35
3EZ24D4	♦MSC	204 - 36
3EZ24D5	♦MSC	204 - 38
	SIEG	
3EZ24D10	MSC	204 - 46
3EZ24D	MSC	204 - 50
3EZ27D1	♦MSC	205 -188
3EZ27D2	♦MSC	205 -189
3EZ27D3	♦MSC	205 -190
3EZ27D4	♦MSC	205 -191
3EZ27D5	♦MSC	205 -193
	SIEG	
3EZ27D10	MSC	205 -201
3EZ27D	MSC	205 -206
3EZ28D1	♦MSC	206 - 57
3EZ28D2	♦MSC	206 - 58
3EZ28D3	♦MSC	206 - 59
3EZ28D4	♦MSC	206 - 60
3EZ28D5	♦MSC	206 - 61
3EZ28D10	MSC	206 - 62
3EZ28D	MSC	206 - 63
3EZ30D1	♦MSC	207 -112
3EZ30D2	♦MSC	207 -113
3EZ30D3	♦MSC	207 -114
3EZ30D4	♦MSC	207 -115
3EZ30D5	♦MSC	207 -117
	SIEG	
3EZ30D10	MSC	207 -126
3EZ30D	MSC	207 -130
3EZ33D1	♦MSC	208 -205
3EZ33D2	♦MSC	208 -206
3EZ33D3	♦MSC	209 - 1
3EZ33D4	♦MSC	209 - 2
3EZ33D5	♦MSC	209 - 4
	SIEG	
3EZ33D10	MSC	209 - 13
3EZ33D	MSC	209 - 17
3EZ36D1	♦MSC	210 - 53
3EZ36D2	♦MSC	210 - 54
3EZ36D3	♦MSC	210 - 55
3EZ36D4	♦MSC	210 - 56
3EZ36D5	♦MSC	210 - 58
	SIEG	
3EZ36D10	MSC	210 - 67
3EZ36D	MSC	210 - 71
3EZ39D1	♦MSC	211 - 90
3EZ39D2	♦MSC	211 - 91
3EZ39D3	♦MSC	211 - 92
3EZ39D4	♦MSC	211 - 93
3EZ39D5	♦MSC	211 - 95
	SIEG	
3EZ39D10	MSC	211 -101
3EZ39D	MSC	211 -104
3EZ43D1	♦MSC	212 -101
3EZ43D2	♦MSC	212 -102
3EZ43D3	♦MSC	212 -103
3EZ43D4	♦MSC	212 -104
3EZ43D5	♦MSC	212 -106
	SIEG	

TYPE No.	MFRS	Pg&Line
3EZ43D10	MSC	212 -112
3EZ43D	MSC	212 -115
3EZ47D1	♦MSC	213 -118
3EZ47D2	♦MSC	213 -119
3EZ47D3	♦MSC	213 -120
3EZ47D4	♦MSC	213 -121
3EZ47D5	♦MSC	213 -123
	SIEG	
3EZ47D10	MSC	213 -129
3EZ47D	MSC	213 -132
3EZ51D1	♦MSC	214 -113
3EZ51D2	♦MSC	214 -114
3EZ51D3	♦MSC	214 -115
3EZ51D4	♦MSC	214 -116
3EZ51D5	♦MSC	214 -118
	SIEG	
3EZ51D10	MSC	214 -124
3EZ51D	MSC	214 -127
3EZ56D1	♦MSC	215 -102
3EZ56D2	♦MSC	215 -103
3EZ56D3	♦MSC	215 -104
3EZ56D4	♦MSC	215 -105
3EZ56D5	♦MSC	215 -107
	SIEG	
3EZ56D10	MSC	215 -114
3EZ56D	MSC	215 -118
3EZ62D1	♦MSC	216 -106
3EZ62D2	♦MSC	216 -107
3EZ62D3	♦MSC	216 -108
3EZ62D4	♦MSC	216 -109
3EZ62D5	♦MSC	216 -111
	SIEG	
3EZ62D10	MSC	216 -117
3EZ62D	MSC	216 -120
3EZ68D1	♦MSC	217 - 87
3EZ68D2	♦MSC	217 - 88
3EZ68D3	♦MSC	217 - 89
3EZ68D4	♦MSC	217 - 90
3EZ68D5	♦MSC	217 - 92
	SIEG	
3EZ68D10	MSC	217 - 98
3EZ68D	MSC	217 -101
3EZ75D1	♦MSC	218 - 70
3EZ75D2	♦MSC	218 - 71
3EZ75D3	♦MSC	218 - 72
3EZ75D4	♦MSC	218 - 73
3EZ75D5	♦MSC	218 - 75
	SIEG	
3EZ75D10	MSC	218 - 82
3EZ75D	MSC	218 - 86
3EZ82D1	♦MSC	219 - 44
3EZ82D2	♦MSC	219 - 45
3EZ82D3	♦MSC	219 - 46
3EZ82D4	♦MSC	219 - 47
3EZ82D5	♦MSC	219 - 49
	SIEG	
3EZ82D10	MSC	219 - 55
3EZ82D	MSC	219 - 58
3EZ91D1	♦MSC	220 - 23
3EZ91D2	♦MSC	220 - 24
3EZ91D3	♦MSC	220 - 25
3EZ91D4	♦MSC	220 - 26
3EZ91D5	♦MSC	220 - 28
	SIEG	
3EZ91D10	MSC	220 - 34
3EZ91D	MSC	220 - 37
3EZ100D1	♦MSC	220 -185
3EZ100D2	♦MSC	220 -186
3EZ100D3	♦MSC	220 -187
3EZ100D4	♦MSC	220 -188
3EZ100D5	♦MSC	220 -190
	SIEG	
3EZ100D10	MSC	220 -197
3EZ100D	MSC	221 - 4
3EZ110D1	♦MSC	221 -143
3EZ110D2	♦MSC	221 -144
3EZ110D3	♦MSC	221 -145
3EZ110D4	♦MSC	221 -146
3EZ110D5	♦MSC	221 -148
	SIEG	
3EZ110D10	MSC	221 -154
3EZ110D	MSC	221 -158
3EZ120D1	♦MSC	222 - 98
3EZ120D2	♦MSC	222 - 99
3EZ120D3	♦MSC	222 -100
3EZ120D4	♦MSC	222 -101
3EZ120D5	♦MSC	222 -104
	SIEG	
3EZ120D10	MSC	222 -111
3EZ120D	MSC	222 -115
3EZ130D1	♦MSC	223 - 50
3EZ130D2	♦MSC	223 - 51
3EZ130D3	♦MSC	223 - 52
3EZ130D4	♦MSC	223 - 53
3EZ130D5	♦MSC	223 - 55
	SIEG	
3EZ130D10	MSC	223 - 61
3EZ130D	MSC	223 - 65
3EZ140D1	♦MSC	223 -118
3EZ140D2	♦MSC	223 -119
3EZ140D3	♦MSC	223 -120
3EZ140D4	♦MSC	223 -121
3EZ140D5	♦MSC	223 -124
	SIEG	
3EZ140D10	MSC	223 -129
3EZ140D	MSC	223 -133
3EZ150D1	♦MSC	224 - 84
3EZ150D2	♦MSC	224 - 85
3EZ150D3	♦MSC	224 - 86
3EZ150D4	♦MSC	223 -122
3EZ150D5	♦MSC	224 - 88
	SIEG	
3EZ150D10	MSC	224 - 94
3EZ150D	MSC	224 - 98

TYPE No.	MFRS	Pg&Line
3EZ160D1	♦MSC	225 - 21
3EZ160D2	♦MSC	225 - 22
3EZ160D3	♦MSC	225 - 23
3EZ160D4	♦MSC	225 - 24
3EZ160D5	♦MSC	225 - 26
	SIEG	
3EZ160D10	MSC	225 - 32
3EZ160D	MSC	225 - 36
3EZ170D1	♦MSC	225 - 85
3EZ170D2	♦MSC	225 - 86
3EZ170D3	♦MSC	225 - 87
3EZ170D4	♦MSC	225 - 88
3EZ170D5	♦MSC	225 - 90
	SIEG	
3EZ170D10	MSC	225 - 93
3EZ170D	MSC	225 - 96
3EZ180D1	♦MSC	226 - 43
3EZ180D2	♦MSC	226 - 44
3EZ180D3	♦MSC	226 - 45
3EZ180D4	♦MSC	226 - 46
3EZ180D5	♦MSC	226 - 48
	SIEG	
3EZ180D10	MSC	226 - 54
3EZ180D	MSC	226 - 59
3EZ190D1	♦MSC	226 - 98
3EZ190D2	♦MSC	226 - 99
3EZ190D3	♦MSC	226 -100
3EZ190D4	♦MSC	226 -101
3EZ190D5	♦MSC	226 -103
	SIEG	
3EZ190D10	MSC	226 -106
3EZ190D	MSC	226 -109
3EZ200D1	♦MSC	227 - 38
3EZ200D2	♦MSC	227 - 39
3EZ200D3	♦MSC	227 - 40
3EZ200D4	♦MSC	227 - 41
3EZ200D5	♦MSC	227 - 43
	SIEG	
3EZ200D10	MSC	227 - 50
3EZ200D	MSC	227 - 54
3E.5	SSI	251 -178
3FB050R	♦CODI	364 - 94
3FB100R	♦CODI	364 -108
3FB200R	♦CODI	364 -118
3FB400R	♦CODI	364 -135
3FB600R	♦CODI	364 -150
3FB800R	CODI	364 -165
3FB1000R	CODI	364 -180
3FC13	♦TOSJ	288 -152
3FD13	♦TOSJ	288 -153
3G1	♦SOD	287 -214
3G2	♦SOD	288 - 83
3G4	SOD	288 -181
3G4B41	TOSJ	363 - 81
3G6	SOD	289 - 46
3G8	♦SOD	289 -120
3G10	SOD	402 -161
3GC12	♦TOSJ	288 -195
3GH61	TOSJ	248 -121
3GZ61	♦TOSJ	289 - 2
3J4B41	TOSJ	363 -128
3JC12	♦TOSJ	289 - 62
3JH61	TOSJ	248 -129
3JZ61	♦TOSJ	289 - 84
3KZ6.8	♦SAR	174 - 36
3KZ7.5	♦SAR	177 -122
3KZ8.2	♦SAR	179 - 95
3KZ9.1	♦SAR	181 - 97
3KZ10	♦SAR	184 - 98
3KZ11	♦SAR	186 -161
3KZ12	♦SAR	188 -140
3KZ13	♦SAR	190 - 79
3KZ15	♦SAR	193 -144
3KZ16	♦SAR	194 - 73
3KZ18	♦SAR	197 - 67
3KZ20	♦SAR	199 - 61
3KZ22	♦SAR	200 - 16
3KZ24	♦SAR	201 -111
3KZ27	♦SAR	204 - 75
3KZ30	♦SAR	205 -202
3KZ33	♦SAR	206 - 97
3KZ36	♦SAR	207 -180
3KZ39	♦SAR	209 - 71
3KZ43	♦SAR	210 -115
3KZ47	♦SAR	211 -143
3KZ51	♦SAR	212 -149
3KZ56	♦SAR	213 -174
3KZ62	♦SAR	214 -149
3KZ66	♦SAR	215 -163
3KZ75	♦SAR	216 -136
3KZ82	♦SAR	217 -128
3KZ91	♦SAR	218 -112
3KZ100	♦SAR	219 - 99
3KZ110	♦SAR	220 - 49
3KZ120	♦SAR	221 - 32
3KZ130	♦SAR	221 -170
3KZ150	♦SAR	223 - 77
3KZ160	♦SAR	223 -142
3KZ180	♦SAR	225 - 47
3KZ200	♦SAR	226 - 55
3LC12	♦TOSJ	289 -132
3LF11	♦TOSJ	289 -164
3LZ61	♦TOSJ	289 -153
3N246	♦DIX	360 -108
	♦MOTA	
3N247	♦DIX	360 -138
	♦MOTA	
3N248	♦DIX	360 -174
	♦MOTA	
3N249	♦DIX	360 -209
	♦MOTA	
3N250	♦DIX	361 - 30
	♦MOTA	

Δ-Registered with JEDEC by this manufacturer

♦-Mfr's data sheet available in microfilm service

1. TYPE No. CROSS INDEX

IN TYPE NUMBER SEQUENCE

TYPE No.	MFRS	Pg&Line
3N251	♦DIX	361 - 54
	♦MOTA	
3N252	♦DIX	361 - 72
	♦MOTA	401 -205
3N253	♦DIX	362 -188
	♦MOTA	
3N254	♦DIX	363 - 18
	♦MOTA	
3N255	♦DIX	363 - 60
	♦MOTA	
3N256	♦DIX	363 -107
	♦MOTA	
3N257	♦DIX	363 -152
	♦MOTA	
3N258	♦DIX	363 -190
	♦MOTA	
3N259	♦DIX	364 - 1
	♦MOTA	402 - 95
3NC12	♦TOSJ	402 -169
3NF11	♦TOSJ	402 -194
3QF11	♦TOSJ	402 -195
3R0/18	SSI	251 -179
3R1/18	SSI	251 -180
3R2/18	SSI	238 - 43
3R2B	♦SSI	251 -181
3R2S	SSI	251 -182
3R3B	♦SSI	251 -183
3R3S	SSI	251 -184
3R4C	♦SSI	251 -185
3R4S	SSI	251 -186
3R5C	♦SSI	251 -187
3R5S	SSI	251 -188
3R6C	♦SSI	251 -189
3R6S	SSI	251 -190
3R7CD	SSI	251 -191
3R8CD	SSI	251 -193
3R8S	SSI	251 -194
3R52	SSI	257 - 93
3RUS2120	♦EDI	406 - 76
3RUS2150	♦EDI	411 - 85
3RUS2180	♦EDI	413 -216
3SBMB4F	♦SET	364 -129
3SF1	♦SET	253 - 58
3SF2	♦SET	254 - 50
3SM0	♦SET	256 - 59
3SM6	♦SET	255 -127
3SM8	♦SET	255 -206
3T6.2,A,B	SAR	175 -188
3T7.5,A,B	SAR	180 -194
3T9.1,A,B	SAR	186 - 16
3T11,A,B	SAR	189 -194
3T13,A,B	SAR	193 -113
3T16,A,B	SAR	197 - 44
3T20,A,B	SAR	201 - 62
3T24,A,B	SAR	204 - 54
3T30,A,B	SAR	207 -118
3T33,A,B	SAR	209 - 21
3T36,A,B	SAR	210 - 75
3T39,A,B	SAR	211 -107
3T43,A,B	SAR	212 -118
3T47,A,B	SAR	213 -135
3T51,A,B	SAR	214 -130
3T56,A,B	SAR	215 -123
3T62,A,B	SAR	216 -123
3T68,A,B	SAR	217 -104
3T75,A,B	SAR	218 - 90
3T82,A,B	SAR	219 - 61
3T91,A,B	SAR	220 - 40
3T100,A,B	SAR	221 - 8
3T110,A,B	SAR	221 -162
3T120,A,B	SAR	222 -119
3T130,A,B	SAR	223 - 69
3T150,A,B	SAR	224 -102
3T160,A,B	SAR	225 - 40
3T180,A,B	SAR	226 - 63
3T200,A,B	SAR	227 - 58
3VR5.6,A,B	♦SAR	173 -116
3VR6,A,B	APD	174 - 25
	SAR	
3VR6.2,A,B	APD	175 -181
	♦SAR	
3VR6.8,A,B	APD	178 -187
	♦SAR	
3VR7.5,A,B	APD	180 -180
	♦SAR	
3VR8.2,A,B	APD	182 -170
	♦SAR	
3VR8.5,A,B	APD	183 -106
	SAR	
3VR9.1,A,B	APD	186 - 1
	♦SAR	
3VR10,A,B	APD	188 - 70
	♦SAR	
3VR11,A,B	APD	189 -183
	♦SAR	
3VR12,A,B	APD	191 -158
	♦SAR	
3VR13,A,B	APD	193 - 99
	♦SAR	
3VR15,A,B	APD	195 -154
	♦SAR	
3VR16,A,B	APD	197 - 33
	♦SAR	
3VR18,A,B	APD	199 - 53
	♦SAR	
3VR20,A,B	APD	201 - 46
	♦SAR	
3VR22,A,B	APD	202 -152
	♦SAR	
3VR24,A,B	APD	204 - 39
	♦SAR	
3VR27,A,B	APD	205 -194
	♦SAR	

TYPE No.	MFRS	Pg&Line
3VR30,A,B	APD	207 -119
	♦SAR	
3VR33,A,B	APD	209 - 5
	♦SAR	
3VR36,A,B	APD	210 - 59
	♦SAR	
3VR39,A,B	APD	211 - 96
	♦SAR	
3VR43,A,B	APD	212 -107
	♦SAR	
3VR47,A,B	APD	213 -124
	♦SAR	
3VR51,A,B	APD	214 -119
	♦SAR	
3VR56,A,B	APD	215 -108
	♦SAR	
3VR62,A,B	♦SAR	216 -112
3VR67,A,B	SAR	216 -133
3VR68,A,B	♦SAR	217 - 93
3VR75,A,B	♦SAR	218 - 76
3VR82,A,B	♦SAR	219 - 50
3VR90,A,B	SAR	219 - 96
3VR91,A,B	♦SAR	220 - 29
3VR100,A,B	♦SAR	220 -191
3VR110,A,B	♦SAR	221 -149
3VR120,A,B	♦SAR	222 -105
3VR130,A,B	♦SAR	223 - 56
3VR150,A,B	♦SAR	224 - 89
3VR160,A,B	♦SAR	225 - 27
3VR180,A,B	♦SAR	226 - 49
3VR200,A,B	♦SAR	227 - 44
4AF1NLH	♦INR	298 -155
4AF1NLV	♦INR	298 -156
4AF1NPP	♦INR	298 -157
4AF2NLH	♦INR	298 -215
4AF2NLV	♦INR	298 -216
4AF2NPP	♦INR	298 -217
4AF4NLH	♦INR	299 - 68
4AF4NLV	♦INR	299 - 69
4AF4NPP	♦INR	299 - 70
4AF05NLH	♦INR	298 -121
4AF05NLV	♦INR	298 -122
4AF05NPP	♦INR	298 -123
4AF6NLH	♦INR	299 -129
4AF6NLV	♦INR	299 -130
4AF6NPP	♦INR	299 -131
4B4B41	TOSJ	365 - 45
4B10Y	INRJ	290 - 31
4B20Y	INRJ	290 - 43
4B30Y	INRJ	290 - 49
4B40Y	INRJ	290 - 57
4D4B41	TOSJ	365 - 65
4E.5	SSI	251 -218
4FB5	♦DII	274 - 1
4FB10	♦DII	274 - 5
4FB20	♦DII	274 - 14
4FB30	♦DII	274 - 21
4FB40	♦DII	274 - 25
4FC5	♦DII	274 - 2
4FC10	♦DII	274 - 6
4FC20	♦DII	274 - 15
4FC30	♦DII	274 - 22
4FC40	♦DII	274 - 26
4G4B41	TOSJ	365 - 87
4J4B41	TOSJ	365 -109
4R0/18	SSI	251 -200
4R1/18	SSI	251 -201
4R2/18	SSI	238 - 71
4R2B	♦SSI	251 -202
4R2S	SSI	251 -203
4R3B	♦SSI	251 -205
4R3S	SSI	251 -206
4R4C	♦SSI	251 -207
4R4S	SSI	251 -208
4R5C	♦SSI	251 -209
4R5S	SSI	251 -210
4R6C	♦SSI	251 -211
4R6S	SSI	251 -212
4R7CD	SSI	251 -213
4R8CD	SSI	251 -215
4R8S	SSI	251 -216
4R52	SSI	257 - 94
4SM1	♦SELI	281 - 33
4SM3	♦SELI	288 -166
4SM6	♦SELI	292 - 38
4SM15	♦SELI	296 -115
4SM25	♦SELI	299 - 27
4SM40	♦SELI	301 -171
4SM55	♦SELI	303 - 44
4SM70	♦SELI	304 - 99
4SM100	♦SELI	306 - 27
4SM150	♦SELI	307 -141
4SM200	♦SELI	308 -172
05RM80	♦THEF	426 - 44
05RM100	♦THEF	427 - 78
05RM120	♦THEF	428 - 87
05RM150	♦THEF	429 - 62
05RM200	♦THEF	430 -153
05RM250	♦THEF	431 -110
05SM1	♦SELI	279 -203
05SM05	♦SELI	276 -133
05Z2.0	IMTM	377 - 16
	TOSJ	
05Z2.2	IMTM	163 -178
	TOSJ	
05Z2.4	IMTM	164 - 39
	TOSJ	
05Z2.7	IMTM	164 -157
	TOSJ	
05Z3.0	IMTM	165 - 89
	TOSJ	
05Z3.3	IMTM	166 - 26
	TOSJ	

TYPE No.	MFRS	Pg&Line
05Z3.6	IMTM	166 -201
	TOSJ	
05Z3.9	IMTM	167 -166
	TOSJ	
05Z4.3	IMTM	168 -186
	TOSJ	
05Z4.7	IMTM	170 - 25
	TOSJ	
05Z5.1	IMTM	171 -129
	TOSJ	
05Z5.6	IMTM	173 - 7
	TOSJ	
05Z6.2	IMTM	175 - 72
	TOSJ	
05Z6.8	IMTM	178 - 41
	TOSJ	
05Z7.5	IMTM	180 - 40
	TOSJ	
05Z8.2	IMTM	182 - 18
	TOSJ	
05Z9.1	IMTM	185 - 55
	TOSJ	
05Z10	IMTM	187 -100
	TOSJ	
05Z11	IMTM	189 - 44
	TOSJ	
05Z12	IMTM	190 -214
	TOSJ	
05Z13	IMTM	192 -177
	TOSJ	
05Z15	IMTM	194 -197
	TOSJ	
05Z16	IMTM	196 -108
	TOSJ	
05Z18	IMTM	198 -111
	TOSJ	
05Z20	IMTM	200 -114
	TOSJ	
05Z22	IMTM	202 - 7
	TOSJ	
05Z24	IMTM	203 -114
	TOSJ	
05Z27	IMTM	205 - 19
	TOSJ	
05Z30	IMTM	206 -156
	TOSJ	
05Z33	IMTM	208 - 43
	TOSJ	
05Z36	IMTM	209 -121
	TOSJ	
05Z36X	IMTM	209 - 55
05Z36Y	IMTM	209 -147
05Z36Z	IMTM	210 - 94
05Z39	IMTM	210 -158
	TOSJ	
05Z43	IMTM	211 -176
	TOSJ	
05Z47	IMTM	212 -188
	TOSJ	
05Z51	IMTM	213 -198
	TOSJ	
5A1/18	♦SSI	245 -146
5A1/52	♦SSI	250 - 83
5A2/18	♦SSI	245 -147
5A2/52	♦SSI	250 - 84
5A5/18	♦SSI	245 -148
5A5/52	♦SSI	250 - 85
5A12/18	SSI	235 - 92
5A13/18	SSI	236 - 62
5A14/18	SSI	236 -100
5A15/18	SSI	236 -171
5A16/18	SSI	237 - 4
5A22/18	SSI	235 - 93
5A23/18	SSI	236 - 63
5A24/18	SSI	236 -101
5A25/18	SSI	236 -172
5A26/18	SSI	237 - 5
5A50	♦SOD	290 -108
5A52/18	SSI	235 - 94
5A53/18	SSI	236 - 64
5A54/18	SSI	236 -102
5A55/18	SSI	236 -173
5A56/18	SSI	237 - 6
5A100	♦SOD	290 -134
5A200	♦SOD	290 -166
5A400	♦SOD	290 -218
5A600	♦SOD	291 - 40
5A800	♦SOD	291 - 63
5A1000	♦SOD	402 -203
5B1	INRJ	290 - 9
5B1/18	♦SSI	245 -149
5B1/52	♦SSI	250 - 86
5B2	INRJ	290 - 10
5B2/18	♦SSI	245 -150
5B2/52	♦SSI	250 - 87
5B3	INRJ	290 - 11
5B4	INRJ	290 - 12
5B05	INRJ	365 - 8
5B5/18	♦SSI	245 -151
5B5/52	♦SSI	250 - 88
5B12/18	SSI	235 - 95
5B13/18	SSI	236 - 65
5B14/18	SSI	236 -103
5B15/18	SSI	236 -174
5B16/18	SSI	237 - 7
5B22/18	SSI	235 - 96
5B23/18	SSI	236 - 66
5B24/18	SSI	236 -104
5B25/18	SSI	236 -175
5B26/18	SSI	237 - 8
5B52/18	SSI	235 - 97
5B53/18	SSI	236 - 67
5B54/18	SSI	236 -105
5B55/18	SSI	236 -176

TYPE No.	MFRS	Pg&Line
5B56/18	SSI	237 - 9
5BL2C41	IMTM	272 -125
	TOSJ	
5BL41	IMTM	262 - 7
	TOSJ	
5C1/18	♦SSI	245 -205
5C1/52	♦SSI	250 - 89
5C1R10	SAKJ	238 -188
5C1R20	SAKJ	239 - 60
5C1R30	SAKJ	239 -115
5C1S10	SAKJ	238 -189
5C1S20	SAKJ	239 - 61
5C1S30	SAKJ	239 -116
5C2/18	♦SSI	245 -206
5C2/52	♦SSI	250 - 90
5C05/18	♦SSI	245 -207
5C05/52	♦SSI	245 -208
5C14/18	SSI	236 -106
5C15/18	SSI	236 -177
5C16/18	SSI	237 - 10
5C17/18	SSI	237 - 40
5C24/18	SSI	236 -107
5C25/18	SSI	236 -178
5C26/18	SSI	237 - 11
5C27/18	SSI	237 - 41
5C50	♦SOD	290 -109
5C054/18	SSI	236 -108
5C055/18	SSI	236 -179
5C056/18	SSI	237 - 12
5C057/18	SSI	237 - 42
5C100	♦SOD	290 -135
5C200	♦SOD	290 -167
5C400	♦SOD	290 -219
5C600	♦SOD	291 - 41
5C800	♦SOD	291 - 64
5C1000	♦SOD	402 -204
5CH1M	NECJ	271 -123
5CH2M	NECJ	271 -126
5CH3M	NECJ	271 -129
5CH4M	NECJ	271 -132
5CL2C41	IMTM	272 -127
	TOSJ	
5CL41	IMTM	262 - 10
	TOSJ	
5CS04SM	NECJ	436 - 82
5D50	♦SOD	290 -121
5D50FS	♦SOD	262 -139
5D100	♦SOD	290 -147
5D100FS	♦SOD	262 -151
5D200	♦SOD	290 -185
5D200FS	♦SOD	262 -164
5D400	♦SOD	291 - 14
5D400FS	♦SOD	262 -175
5D600	♦SOD	291 - 52
5D600FS	♦SOD	262 -186
5D800	♦SOD	291 - 75
5D800FS	♦SOD	262 -197
5D1000	♦SOD	402 -211
5DL2C41	IMTM	272 -129
	TOSJ	
5DL41	IMTM	262 - 13
	TOSJ	
5E1R20	SAKJ	239 - 62
5E1R40	SAKJ	239 -167
5E1R60	SAKJ	240 - 21
5E1S20	SAKJ	239 - 63
5E1S40	SAKJ	239 -168
5E1S60	SAKJ	240 - 22
5E.5	SSI	251 -219
5F1R07	♦SAKJ	238 -132
5F1R15	♦SAKJ	239 - 25
5F1S07	♦SAKJ	290 -131
5F1S15	♦SAKJ	290 -164
5FF05	♦SET	252 - 28
5FF10	♦SET	252 -213
5FF15	♦SET	253 -180
5FWJ2C41	TOSJ	272 -131
5GWJ2C41	IMTM	272 -132
	TOSJ	
5J3P	SAR	294 -179
5JH3	SAR	304 -204
5KF10(B)	INRJ	262 - 45
5KF20(B)	INRJ	262 - 55
5KP5.0	♦GSE	337 - 96
5KP5.0A	♦GSE	337 - 97
5KP6.0	♦GSE	337 - 98
5KP6.0A	♦GSE	337 - 99
5KP6.5	♦GSE	337 -100
5KP6.5A	♦GSE	337 -101
5KP7.0	♦GSE	337 -102
5KP7.0A	♦GSE	337 -103
5KP7.5	♦GSE	337 -104
5KP7.5A	♦GSE	337 -105
5KP8.0	♦GSE	337 -106
5KP8.0A	♦GSE	337 -107
5KP8.5	♦GSE	337 -108
5KP8.5A	♦GSE	337 -109
5KP9.0	♦GSE	337 -110
5KP9.0A	♦GSE	338 - 1
5KP10	♦GSE	338 - 2
5KP10A	♦GSE	338 - 3
5KP11	♦GSE	338 - 4
5KP11A	♦GSE	338 - 5
5KP12	♦GSE	338 - 6
5KP12A	♦GSE	338 - 7
5KP13	♦GSE	338 - 8
5KP13A	♦GSE	338 - 9
5KP14	♦GSE	338 - 10
5KP14A	♦GSE	338 - 11
5KP15	♦GSE	338 - 12
5KP15A	♦GSE	338 - 13
5KP16	♦GSE	338 - 14
5KP16A	♦GSE	338 - 15
5KP17	♦GSE	338 - 16

TYPE No.	MFRS	Pg&Line
5KP17A	♦GSE	338 - 17
5KP18	♦GSE	338 - 18
5KP18A	♦GSE	338 - 19
5KP20	♦GSE	338 - 20
5KP20A	♦GSE	338 - 21
5KP22	♦GSE	338 - 22
5KP22A	♦GSE	338 - 23
5KP24	♦GSE	338 - 24
5KP24A	♦GSE	338 - 25
5KP26	♦GSE	338 - 26
5KP26A	♦GSE	338 - 27
5KP28	♦GSE	338 - 28
5KP28A	♦GSE	338 - 29
5KP30	♦GSE	338 - 30
5KP30A	♦GSE	338 - 31
5KP33	♦GSE	338 - 32
5KP33A	♦GSE	338 - 33
5KP36	♦GSE	338 - 34
5KP36A	♦GSE	338 - 35
5KP40	♦GSE	338 - 36
5KP40A	♦GSE	338 - 37
5KP43	♦GSE	338 - 38
5KP43A	♦GSE	338 - 39
5KP45	♦GSE	338 - 40
5KP45A	♦GSE	338 - 41
5KP48	♦GSE	338 - 42
5KP48A	♦GSE	338 - 43
5KP51	♦GSE	338 - 44
5KP51A	♦GSE	338 - 45
5KP54	♦GSE	338 - 46
5KP54A	♦GSE	338 - 47
5KP58	♦GSE	338 - 48
5KP58A	♦GSE	338 - 49
5KP60	♦GSE	338 - 50
5KP60A	♦GSE	338 - 51
5KP64	♦GSE	338 - 52
5KP64A	♦GSE	338 - 53
5KP70	♦GSE	338 - 54
5KP70A	♦GSE	338 - 55
5KP75	♦GSE	338 - 56
5KP75A	♦GSE	338 - 57
5KP78	♦GSE	338 - 58
5KP78A	♦GSE	338 - 59
5KP85	♦GSE	338 - 60
5KP85A	♦GSE	338 - 61
5KP90	♦GSE	338 - 62
5KP90A	♦GSE	338 - 63
5KP100	♦GSE	338 - 64
5KP100A	♦GSE	338 - 65
5KP110	♦GSE	338 - 66
5KP110A	♦GSE	338 - 67
5KQ30(B)	INRJ	374 -107
5KQ40(B)	INRJ	374 -112
5KQ50(B)	INRJ	374 -115
5KQ60(B)	INRJ	374 -118
5L15	♦EDL	410 -205
5L20	EDL	414 -183
5L25	EDL	417 -105
5L30	EDL	419 - 57
5L35	EDL	420 -173
5L40	EDL	421 -141
5L45	EDL	422 -186
5L50	EDL	423 - 86
5L55	EDL	424 - 90
5L60	EDL	424 -139
5L65	EDL	425 - 35
5L70	EDL	425 - 69
5L75	EDL	425 -133
5L80	EDL	426 - 19
5L85	EDL	426 -138
5L90	EDL	426 -155
5L95	EDL	426 -199
5L100	EDL	427 - 44
5L110	EDL	428 - 4
5L120	EDL	428 - 60
5L130	EDL	428 -163
5L140	EDL	428 -191
5L150	EDL	429 - 33
5L160	EDL	429 -185
5L170	EDL	430 - 15
5L180	EDL	430 - 48
5L190	EDL	430 - 73
5L200	EDL	430 -127
5L209	EDL	414 -184
5L210	EDL	431 - 3
5L220	EDL	431 - 17
5L230	EDL	431 - 37
5L240	EDL	431 - 52
5L250	EDL	431 - 97
5L260	EDL	431 -180
5L270	EDL	431 -197
5L280	EDL	431 -209
5L290	EDL	432 - 7
5L300	EDL	432 - 40
5M47ZS10,5	MOTA	391 - 24
5Q3	SAR	298 - 64
5R0/18	SSI	251 -220
5R1/18	SSI	252 - 2
5R1/52	♦SSI	257 - 95
5R2/4	♦SSI	252 - 3
5R2/18	SSI	238 - 75
5R2/66	♦SSI	252 - 4
5R2B	♦SSI	252 - 5
5R2S	SSI	252 - 6
5R3/4	♦SSI	252 - 8
5R3/66	♦SSI	252 - 9
5R3B	♦SSI	252 - 10
5R3S	SSI	252 - 11
5R4/3	♦SSI	252 - 14
5R4/3C	♦SSI	252 - 33
5R4/4	♦SSI	252 - 15
5R4/59	♦SSI	252 - 34
5R4C	♦SSI	252 - 16
5R4S	SSI	252 - 17

Δ-Registered with JEDEC by this manufacturer

♦-Mfr's data sheet available in microfilm service

1. TYPE No. CROSS INDEX

IN TYPE NUMBER SEQUENCE

TYPE No.	MFRS	Pg&Line
5R5/3	♦SSI	252 - 35
5R5/3D	♦SSI	252 - 50
5R5/5	♦SSI	252 - 36
5R5/61	♦SSI	252 - 51
5R5C	♦SSI	252 - 37
5R5S	SSI	252 - 38
5R6/3	♦SSI	252 - 52
5R6/3D	♦SSI	252 - 53
5R6/5	♦SSI	252 - 54
5R6/61	♦SSI	252 - 55
5R6C	♦SSI	252 - 56
5R6S	SSI	252 - 57
5R7/3	♦SSI	252 - 58
5R7/3D	♦SSI	252 - 69
5R7/5	♦SSI	252 - 59
5R7/61	♦SSI	252 - 70
5R7CD	SSI	252 - 60
5R7S	♦SSI	305 - 2
5R8/3	♦SSI	252 - 71
5R8/3D	♦SSI	252 - 72
5R8/5	♦SSI	252 - 73
5R8/63	♦SSI	252 - 74
5R8CD	SSI	252 - 75
5R8S	SSI	252 - 76
5R52	SSI	257 - 96
5RE52	♦SSI	291 -100
5RO/18	♦SSI	252 - 1
5S1S03	SAKJ	374 -192
5S1S04	SAKJ	374 -198
6A1	♦DII	291 -160
	RECT	
6A1G	♦DII	291 -154
	♦RECT	
6A2	♦DII	291 -211
GTC	RECT	
6A2G	♦DII	291 -205
	♦RECT	
6A4	♦DII	292 - 58
GTC	RECT	
6A4G	♦DII	292 - 53
	♦RECT	
6A05Δ	♦RFE	291 -102
6A05#B	♦DII	291 -117
	RECT	
6A05G	♦DII	291 -111
	♦RECT	
6A6	♦DII	292 -116
GTC	RECT	
6A6F1	♦SCN	292 - 98
6A6F	♦SCN	292 - 99
6A6G	♦DII	292 -111
	♦RECT	
6A8	DII	292 -167
GTC	RECT	
6A8F1	♦SCN	292 -149
6A8F	♦SCN	292 -150
6A8G	♦DII	292 -162
	♦RECT	
6A10Δ	♦RFE	291 -144
6A10#B	DII	403 - 16
GTC	RECT	
6A10F1	♦SCN	402 -217
6A10F	♦SCN	402 -218
6A10G	♦DII	403 - 9
	♦RECT	
6A15	♦SOD	291 - 93
6A30	♦SOD	291 - 96
6A50	♦SOD	291 -103
6A100	♦SOD	291 -145
6A100#B	♦RFE	402 -220
6A150	♦SOD	291 -183
6A200	♦SOD	291 -195
6A300	♦SOD	292 - 13
6A400	♦SOD	292 - 42
6A500	♦SOD	292 - 80
6A600	♦SOD	292 -101
6A700	SOD	292 -147
6A800	♦SOD	292 -186
6A900	SOD	292 -195
6A1000	♦SOD	403 - 32
6A1200	♦SOD	406 -143
6ALZ6.8	♦SAR	379 - 38
6ALZ6.8A	♦SAR	379 - 37
6ALZ6.8B	♦SAR	379 - 39
6ALZ7.5	♦SAR	380 - 32
6ALZ7.5A	♦SAR	380 - 31
6ALZ7.5B	♦SAR	380 - 33
6ALZ8.2	♦SAR	380 - 76
6ALZ8.2A	♦SAR	380 - 74
6ALZ8.2B	♦SAR	380 - 78
6ALZ8.7	♦SAR	380 -146
6ALZ8.7A	♦SAR	380 -145
6ALZ8.7B	♦SAR	380 -147
6ALZ9.1	♦SAR	380 -203
6ALZ9.1A	♦SAR	380 -201
6ALZ9.1B	♦SAR	381 - 1
6ALZ10	♦SAR	381 -102
6ALZ10A	♦SAR	381 - 99
6ALZ10B	♦SAR	381 -104
6ALZ11	♦SAR	381 -197
6ALZ11A	♦SAR	381 -196
6ALZ11B	♦SAR	381 -198
6ALZ12	♦SAR	382 -110
6ALZ12A	♦SAR	382 -108
6ALZ12B	♦SAR	382 -112
6ALZ13	♦SAR	383 - 25
6ALZ13A	♦SAR	383 - 24
6ALZ13B	♦SAR	383 - 26
6ALZ14	♦SAR	383 -116
6ALZ14A	♦SAR	383 -115
6ALZ14B	♦SAR	383 -117
6ALZ15	♦SAR	383 -191
6ALZ15A	♦SAR	383 -189
6ALZ15B	♦SAR	383 -193

TYPE No.	MFRS	Pg&Line
6ALZ16	♦SAR	384 - 98
6ALZ16A	♦SAR	384 - 97
6ALZ16B	♦SAR	384 - 99
6ALZ17	♦SAR	384 -180
6ALZ17A	♦SAR	384 -179
6ALZ17B	♦SAR	384 -181
6ALZ18	♦SAR	385 - 57
6ALZ18A	♦SAR	385 - 55
6ALZ18B	♦SAR	385 - 59
6ALZ19	♦SAR	385 -145
6ALZ19A	♦SAR	385 -144
6ALZ19B	♦SAR	385 -146
6ALZ20	♦SAR	386 - 10
6ALZ20A	♦SAR	386 - 8
6ALZ20B	♦SAR	386 - 12
6ALZ22	♦SAR	386 -114
6ALZ22A	♦SAR	386 -113
6ALZ22B	♦SAR	386 -115
6ALZ23	♦SAR	386 -186
6ALZ23A	♦SAR	386 -185
6ALZ23B	♦SAR	386 -187
6ALZ24	♦SAR	387 - 32
6ALZ24A	♦SAR	387 - 30
6ALZ24B	♦SAR	387 - 34
6ALZ25	♦SAR	387 -112
6ALZ25A	♦SAR	387 -111
6ALZ25B	♦SAR	387 -113
6ALZ27	♦SAR	387 -171
6ALZ27A	♦SAR	387 -169
6ALZ27B	♦SAR	387 -173
6ALZ28	♦SAR	388 - 45
6ALZ28A	♦SAR	388 - 44
6ALZ28B	♦SAR	388 - 46
6ALZ30	♦SAR	388 - 90
6ALZ30A	♦SAR	388 - 88
6ALZ30B	♦SAR	388 - 92
6ALZ33	♦SAR	388 -196
6ALZ33A	♦SAR	388 -194
6ALZ33B	♦SAR	388 -198
6ALZ36	♦SAR	389 -109
6ALZ36A	♦SAR	389 -107
6ALZ36B	♦SAR	389 -111
6ALZ39	♦SAR	390 - 2
6ALZ39A	♦SAR	390 - 1
6ALZ39B	♦SAR	390 - 3
6ALZ43	♦SAR	390 -111
6ALZ43A	♦SAR	390 -110
6ALZ43B	♦SAR	390 -112
6ALZ47	♦SAR	391 - 44
6ALZ47A	♦SAR	391 - 43
6ALZ47B	♦SAR	391 - 45
6ALZ51	♦SAR	391 -181
6ALZ51A	♦SAR	391 -180
6ALZ51B	♦SAR	391 -182
6ALZ56	♦SAR	392 -100
6ALZ56A	♦SAR	392 - 99
6ALZ56B	♦SAR	392 -101
6ALZ60	♦SAR	392 -183
6ALZ60A	♦SAR	392 -181
6ALZ60B	♦SAR	392 -185
6ALZ62	♦SAR	393 - 15
6ALZ62A	♦SAR	393 - 14
6ALZ62B	♦SAR	393 - 17
6ALZ68	♦SAR	393 -106
6ALZ68A	♦SAR	393 -105
6ALZ68B	♦SAR	393 -108
6ALZ75	♦SAR	394 - 28
6ALZ75A	♦SAR	394 - 27
6ALZ75B	♦SAR	394 - 30
6ALZ82	♦SAR	394 -134
6ALZ82A	♦SAR	394 -133
6ALZ82B	♦SAR	394 -136
6ALZ87	♦SAR	394 -198
6ALZ87A	♦SAR	394 -197
6ALZ87B	♦SAR	395 - 1
6ALZ91	♦SAR	395 - 44
6ALZ91A	♦SAR	395 - 43
6ALZ91B	♦SAR	395 - 46
6ALZ100	♦SAR	395 -148
6ALZ100A	♦SAR	395 -146
6ALZ100B	♦SAR	395 -151
6ALZ110	♦SAR	396 - 71
6ALZ110A	♦SAR	396 - 70
6ALZ110B	♦SAR	396 - 73
6ALZ120	♦SAR	396 -158
6ALZ120A	♦SAR	396 -157
6ALZ120B	♦SAR	396 -160
6ALZ130	♦SAR	397 - 47
6ALZ130A	♦SAR	397 - 46
6ALZ130B	♦SAR	397 - 49
6ALZ140	♦SAR	397 -128
6ALZ140A	♦SAR	397 -127
6ALZ140B	♦SAR	397 -129
6ALZ150	♦SAR	397 -184
6ALZ150A	♦SAR	397 -183
6ALZ150B	♦SAR	397 -186
6ALZ160	♦SAR	398 - 73
6ALZ160A	♦SAR	398 - 72
6ALZ160B	♦SAR	398 - 75
6ALZ170	♦SAR	398 -137
6ALZ170A	♦SAR	398 -136
6ALZ170B	♦SAR	398 -138
6ALZ180	♦SAR	398 -187
6ALZ180A	♦SAR	398 -186
6ALZ180B	♦SAR	398 -189
6ALZ190	♦SAR	399 - 62
6ALZ190A	♦SAR	399 - 61
6ALZ190B	♦SAR	399 - 63
6ALZ200	♦SAR	399 - 95
6ALZ200A	♦SAR	399 - 94
6ALZ200B	♦SAR	399 - 97
6B4B41	♦TOSJ	366 - 43
6B20	INRJ	366 - 69
6B40	INRJ	366 - 98

TYPE No.	MFRS	Pg&Line
6B60	INRJ	366 -126
6BG11	♦TOSJ	258 - 76
6CC13	♦TOSJ	291 -184
6CD13	♦TOSJ	291 -185
6D4B41	♦TOSJ	366 - 68
6D50	♦SOD	291 -122
6D50FS	♦SOD	262 -140
6D100	♦SOD	291 -164
6D100FS	♦SOD	262 -152
6D200	♦SOD	291 -214
6D200FS	♦SOD	262 -165
6D400	♦SOD	292 - 61
6D400FS	♦SOD	262 -176
6D600	♦SOD	292 -121
6D600FS	♦SOD	262 -187
6D800	♦SOD	292 -172
6D800FS	♦SOD	262 -198
6D1000	♦SOD	403 - 19
6DG11	♦TOSJ	259 - 72
6FB050	♦CODI	366 - 26
6FB100	♦CODI	366 - 50
6FB200	♦CODI	366 - 76
6FB400	♦CODI	366 -105
6FB600	♦CODI	366 -133
6FB800	♦CODI	366 -160
6FB1000	♦CODI	366 -182
6FC13	TOSJ	292 - 17
6FD13	TOSJ	292 - 18
6FH1S	NECJ	262 - 47
6FH2S	NECJ	262 - 57
6FH3S	NECJ	262 - 65
6FH4S	NECJ	262 - 72
6FH05S	NECJ	262 - 40
6FL10S02	INRJ	258 - 68
6FL20S02	INRJ	259 - 64
6FL40S02	INRJ	260 - 27
6FL60S02	INRJ	260 -153
6FXF11	♦TOSJ	419 -180
6G4B41	TOSJ	366 - 97
6GC12	TOSJ	292 - 48
6GG11	♦TOSJ	260 - 39
6J4B41	TOSJ	366 -151
6JC12	TOSJ	292 -107
6LC12	TOSJ	292 -158
6LF11	♦TOSJ	292 -180
6M10	♦INRJ	296 - 59
6M20	♦INRJ	296 - 96
6M30	INRJ	296 -109
6M40	♦INRJ	296 -139
6M60	♦INRJ	296 -165
6M80	♦INRJ	296 -174
6M100	♦INRJ	403 - 93
6MA10	INRJ	296 - 54
6MA20	INRJ	296 - 90
6MA40	INRJ	296 -133
6MA60	INRJ	296 -161
6MA80	INRJ	296 -173
6MA100	INRJ	403 - 91
6NC12	♦TOSJ	403 - 4
6NF11	♦TOSJ	403 - 26
6QF11	♦TOSJ	406 -155
6RH1S	NECJ	262 - 48
6RH2S	NECJ	262 - 58
6RH3S	NECJ	262 - 66
6RH4S	NECJ	262 - 73
6RH05S	NECJ	262 - 41
6RM40	♦THEF	422 - 9
6RM60	♦THEF	425 - 5
6RM80	♦THEF	426 - 95
6RM100	♦THEF	427 -173
6RM120	♦THEF	428 -140
6RM150	♦THEF	429 -135
6RM200	♦THEF	430 -191
6RM250	♦THEF	431 -159
6SB050	♦CODI	366 - 27
6SB50	♦CODI	366 - 28
6SB100	♦CODI	366 - 51
6SB200	♦CODI	366 - 77
6SB400	♦CODI	366 -106
6SB600	♦CODI	366 -134
6SB800	♦CODI	366 -161
6SB1000	♦CODI	366 -183
6SBF20	CODI	366 - 67
6SBF40	CODI	366 - 96
6SBF60	CODI	366 -125
6SBF80	CODI	366 -153
6SBF100	CODI	366 -177
6SM1	♦SELI	281 -152
6SM3	♦SELI	289 - 31
6SM6	♦SELI	292 - 77
6SM15	♦SELI	296 -145
6SM25	♦SELI	299 - 80
6SM40	♦SELI	301 -199
6SM55	♦SELI	303 - 47
6SM70	♦SELI	304 -131
6SM100	♦SELI	306 - 73
6SM150	♦SELI	307 -181
6SM200	♦SELI	308 -190
7A1/18	♦SSI	246 - 87
7A1/52	♦SSI	250 - 99
7A2/18	♦SSI	246 - 88
7A2/52	♦SSI	250 -100
7A5/18	♦SSI	246 - 89
7A5/52	♦SSI	250 -101
7A12/18	SSI	235 - 98
7A13/18	SSI	236 - 68
7A14/18	SSI	236 -109
7A15/18	SSI	236 -180
7A16/18	SSI	237 - 13
7A22/18	SSI	235 - 99
7A23/18	SSI	236 - 69
7A24/18	SSI	236 -110
7A25/18	SSI	236 -181
7A26/18	SSI	237 - 14

TYPE No.	MFRS	Pg&Line
7A52/18	SSI	235 -100
7A53/18	SSI	236 - 70
7A54/18	SSI	236 -111
7A55/18	SSI	236 -112
7A56/18	SSI	237 - 15
7B1/18	♦SSI	246 - 90
7B1/52	♦SSI	250 -102
7B2/18	♦SSI	246 - 91
7B2/52	♦SSI	250 -103
7B5/18	♦SSI	246 - 92
7B5/52	♦SSI	250 -104
7B12/18	SSI	235 -101
7B13/18	SSI	236 - 71
7B14/18	SSI	236 -113
7B15/18	SSI	236 -182
7B16/18	SSI	237 - 16
7B22/18	SSI	235 -102
7B23/18	SSI	236 - 72
7B24/18	SSI	236 -114
7B25/18	SSI	236 -183
7B26/18	SSI	237 - 17
7B52/18	SSI	235 -103
7B53/18	SSI	236 - 73
7B54/18	SSI	236 -115
7B55/18	SSI	236 -184
7B56/18	SSI	237 - 18
7C1/18	♦SSI	246 -147
7C1/52	♦SSI	250 -105
7C2/18	♦SSI	246 -148
7C2/52	♦SSI	250 -106
7C05/18	♦SSI	246 -149
7C05/52	♦SSI	250 -107
7C14/18	SSI	236 -116
7C15/18	SSI	236 -185
7C16/18	SSI	237 - 19
7C17/18	SSI	237 - 43
7C24/18	SSI	236 -117
7C25/18	SSI	236 -186
7C26/18	SSI	237 - 20
7C27/18	SSI	237 - 44
7C054/18	SSI	236 -118
7C055/18	SSI	236 -187
7C056/18	SSI	237 - 21
7C057/18	SSI	237 - 45
7D8	♦CODI	275 -195
7D10	♦CODI	401 - 65
7D12	♦CODI	405 -208
7D15	♦CODI	411 - 23
7E.5	SSI	252 -136
7R0/18	SSI	252 -137
7R1/18	SSI	252 -139
7R1/52	♦SSI	257 -207
7R2/4	♦SSI	252 -140
7R2/18	SSI	238 -121
7R2/66	♦SSI	252 -141
7R2B	♦SSI	252 -142
7R2S	SSI	252 -143
7R3/4	♦SSI	252 -145
7R3/66	♦SSI	252 -146
7R3B	♦SSI	252 -147
7R3S	SSI	252 -148
7R4/3	♦SSI	252 -149
7R4/3C	♦SSI	252 -153
7R4/4	♦SSI	252 -150
7R4/59	♦SSI	252 -154
7R4C	♦SSI	252 -151
7R4S	SSI	252 -152
7R5/3	♦SSI	252 -155
7R5/3D	♦SSI	252 -159
7R5/5	♦SSI	252 -156
7R5/61	♦SSI	252 -160
7R5C	♦SSI	252 -157
7R5S	SSI	252 -158
7R6/3	♦SSI	252 -161
7R6/3D	♦SSI	252 -162
7R6/5	♦SSI	252 -163
7R6/61	♦SSI	252 -164
7R6C	♦SSI	252 -165
7R6S	SSI	252 -166
7R7/3	♦SSI	252 -167
7R7/3D	♦SSI	252 -170
7R7/5	♦SSI	252 -168
7R7/61	♦SSI	252 -171
7R7CD	SSI	252 -169
7R7S	♦SSI	305 - 8
7R8/3	♦SSI	252 -172
7R8/3D	♦SSI	252 -173
7R8/5	♦SSI	252 -174
7R8/63	♦SSI	252 -175
7R8CD	SSI	252 -176
7R8S	SSI	252 -177
7R52	SSI	257 -208
7RE52	♦SSI	291 -134
7RO/18	♦SSI	252 -138
8AF1NLH	♦INR	302 -142
8AF1NLV	♦INR	302 -143
8AF1NPP	♦INR	302 -144
8AF2NLH	♦INR	302 -172
8AF2NLV	♦INR	302 -173
8AF2NPP	♦INR	302 -174
8AF4NLH	♦INR	302 -207
8AF4NLV	♦INR	302 -208
8AF4NPP	♦INR	302 -209
8AF05NLH	♦INR	302 -127
8AF05NLV	♦INR	302 -128
8AF05NPP	♦INR	302 -129
8SB050	♦CODI	367 - 2
8SB100	♦CODI	367 - 15
8SB200	♦CODI	367 - 32
8SB400	♦CODI	367 - 48
8SB600	♦CODI	367 - 65
8SM1	♦SELI	282 - 27
8SM3	♦SELI	289 -107
8SM6	♦SELI	292 -138

TYPE No.	MFRS	Pg&Line
8SM15	♦SELI	296 -168
8SM25	♦SELI	299 -140
8SM40	♦SELI	302 - 15
8SM55	♦SELI	303 - 50
8SM70	♦SELI	304 -169
8SM100	♦SELI	306 -126
8SM150	♦SELI	308 - 7
8SM200	♦SELI	308 -206
9MF2A100	AEIL	258 -113
9MF2A200	AEIL	259 -112
9MF2A400	AEIL	260 - 75
9MF2A600	AEIL	260 -204
9MF2B100	AEIL	258 -130
9MF2B200	AEIL	259 -127
9MF2B400	AEIL	260 - 86
9MF2B600	AEIL	261 - 1
9MF2B800	AEIL	261 - 71
9MF10B100	AEIL	258 -131
9MF10B100R	AEIL	258 -132
9MF10B200	AEIL	259 -128
9MF10B200R	AEIL	259 -129
9MF10B400	AEIL	260 - 87
9MF10B400R	AEIL	260 - 88
9MF10B600	AEIL	261 - 2
9MF10B600R	AEIL	261 - 3
9MF10B800	AEIL	261 - 72
9MF10B800R	AEIL	261 - 73
10A1/18	♦SSI	247 - 4
10A1/52	♦SSI	250 -113
10A2/18	♦SSI	247 - 5
10A2/52	♦SSI	250 -114
10A5/18	♦SSI	247 - 6
10A5/52	♦SSI	250 -115
10A12/18	SSI	235 -104
10A13/18	SSI	236 - 74
10A14/18	SSI	236 -119
10A15/18	SSI	236 -188
10A16/18	SSI	237 - 22
10A22/18	SSI	235 -105
10A23/18	SSI	236 - 75
10A24/18	SSI	236 -120
10A25/18	SSI	236 -189
10A26/18	SSI	237 - 23
10A50	SOD	293 -209
10A52/18	SSI	235 -106
10A53/18	SSI	236 - 76
10A54/18	SSI	236 -121
10A55/18	SSI	236 -190
10A56/18	SSI	237 - 24
10A100	SOD	294 - 11
10A200	SOD	294 - 41
10A400	SOD	294 - 90
10A600	SOD	294 -128
10A800	SOD	294 -143
10B1/18	♦SSI	247 - 7
10B1/52	♦SSI	250 -116
10B2/18	♦SSI	247 - 8
10B2/52	♦SSI	250 -117
10B4B41	TOSJ	367 -130
10B5/18	♦SSI	247 - 9
10B5/52	♦SSI	250 -118
10B12/18	SSI	235 -107
10B13/18	SSI	236 - 77
10B14/18	SSI	236 -122
10B15/18	SSI	236 -191
10B16/18	SSI	237 - 25
10B22/18	SSI	235 -108
10B23/18	SSI	236 - 78
10B24/18	SSI	236 -123
10B25/18	SSI	236 -192
10B26/18	SSI	237 - 26
10B52/18	SSI	235 -109
10B53/18	SSI	236 - 79
10B54/18	SSI	236 -124
10B55/18	SSI	236 -193
10B56/18	SSI	237 - 27
10BL2C41	IMTM	272 -126
	TOSJ	
10C1R10	SAKJ	238 -190
10C1R20	SAKJ	239 - 64
10C1R30	SAKJ	239 -117
10C1S10	SAKJ	238 -191
10C1S20	SAKJ	239 - 65
10C1S30	SAKJ	239 -118
10C2/18	♦SSI	247 - 57
10C2/52	♦SSI	250 -120
10C2R10	SAKJ	238 -192
10C2R11	SAKJ	238 -193
10C2R20	SAKJ	239 - 66
10C2R21	SAKJ	239 - 67
10C2R30	SAKJ	239 -119
10C2S10	SAKJ	238 -194
10C2S11	SAKJ	238 -195
10C2S20	SAKJ	239 - 68
10C2S21	SAKJ	239 - 69
10C2S30	SAKJ	239 -120
10C2SR11	SAKJ	238 -196
10C2SR20	SAKJ	239 - 70
10C2SR21	SAKJ	239 - 71
10C2SR30	SAKJ	239 -121
10C2SR31	SAKJ	239 -122
10C2SS11	SAKJ	238 -197
10C2SS21	SAKJ	239 - 72
10C2SS30	SAKJ	239 -123
10C2SS31	SAKJ	239 -124
10C05/18	♦SSI	247 - 58
10C05/52	♦SSI	250 -121
10C11/18	♦SSI	247 - 59
10C11/52	♦SSI	247 - 60
10C14/18	SSI	236 -125
10C15/18	SSI	236 -194
10C16/18	SSI	237 - 28
10C17/18	SSI	237 - 46
10C24/18	SSI	236 -126

Δ-Registered with JEDEC by this manufacturer

♦-Mfr's data sheet available in microfilm service

1. TYPE No. CROSS INDEX

IN TYPE NUMBER SEQUENCE

TYPE No.	MFRS	Pg&Line
10C25/18	SSI	236 -195
10C26/18	SSI	237 - 29
10C27/18	SSI	237 - 47
10C054/18	SSI	236 -127
10C055/18	SSI	236 -196
10C056/18	SSI	237 - 30
10C057/18	SSI	237 - 48
10CL2C41	IMTM	272 -128
	TOSJ	
10CS04SM	NECJ	436 - 83
10D1	♦INR	280 - 95
	INRJ	
10D2	♦INR	280 -193
	♦INRJ	
10D4	♦INR	281 - 98
	♦INRJ	
10D4B41	TOSJ	367 -165
10D05	♦INR	280 - 18
10D6	♦INR	281 -211
	♦INRJ	
10D8	♦INR	282 - 75
	♦INRJ	
10D10	♦INR	401 -206
	♦INRJ	
10DF1	INRJ	247 - 73
10DF2	INRJ	247 -122
10DF4	INRJ	260 -100
10DF6	INRJ	261 - 20
10DL1	♦INR	280 - 48
	INRJ	
10DL2	♦INR	280 -136
	INRJ	
10DL2C41	TOSJ	272 -130
10E1	INRJ	280 - 89
10E1R20	SAKJ	239 - 73
10E1R40	SAKJ	239 -169
10E1R60	SAKJ	240 - 23
10E1S20	SAKJ	239 - 74
10E1S40	SAKJ	239 -170
10E1S60	SAKJ	240 - 24
10E2	INRJ	280 -186
10E2R20	SAKJ	239 - 75
10E2R21	SAKJ	239 - 76
10E2R40	SAKJ	239 -171
10E2R41	SAKJ	239 -172
10E2R60	SAKJ	240 - 25
10E2R61	SAKJ	240 - 26
10E2S20	SAKJ	239 - 77
10E2S21	SAKJ	239 - 78
10E2S40	SAKJ	239 -173
10E2S41	SAKJ	239 -174
10E2S60	SAKJ	240 - 27
10E2S61	SAKJ	240 - 28
10E4	INRJ	281 - 90
10E6	INRJ	281 -204
10E8	INRJ	282 - 70
10E.5	SSI	252 -184
10F1R07	SAKJ	238 -124
10F1R15	SAKJ	239 - 15
10F1S07	SAKJ	238 -125
10F1S15	SAKJ	239 - 16
10F2R07	SAKJ	240 - 55
10F2R15	SAKJ	239 - 17
10F2S07	SAKJ	240 - 56
10F2S15	SAKJ	239 - 18
10F20	♦CODI	241 -143
10F30	♦CODI	241 -165
10F40	♦CODI	241 -182
10F50	♦CODI	241 -197
10FWJ2C11	TOSJ	262 - 33
10FWJ2C41	TOSJ	272 -134
10G4B41	TOSJ	367 -207
10GWJ2C11	IMTM	262 - 38
	TOSJ	
10GWJ2C41	TOSJ	272 -136
10H3	♦SAR	291 -166
10HB05	♦CODI	367 -104
10HB10	♦CODI	367 -134
10HB20	♦CODI	367 -172
10HB40	♦CODI	367 -212
10HB60	♦CODI	368 - 30
10HB80	♦CODI	368 - 62
10J3P	SAR	294 -208
10J4B41	TOSJ	368 - 48
10JH3	SAR	304 -205
10KZ6.8	♦SAR	378 -150
10KZ7.5	♦SAR	379 - 5
10KZ8.2	♦SAR	379 -113
10KZ9.1	♦SAR	380 - 36
10KZ10	♦SAR	380 -163
10KZ11	♦SAR	381 - 63
10KZ12	♦SAR	381 -177
10KZ13	♦SAR	382 - 70
10KZ15	♦SAR	383 - 88
10KZ16	♦SAR	383 -151
10KZ18	♦SAR	384 -163
10KZ20	♦SAR	385 - 88
10KZ22	♦SAR	385 -170
10KZ24	♦SAR	386 - 77
10KZ27	♦SAR	387 - 95
10KZ30	♦SAR	387 -202
10KZ33	♦SAR	388 - 50
10KZ36	♦SAR	388 -155
10KZ39	♦SAR	389 - 66
10KZ43	♦SAR	389 -173
10KZ47	♦SAR	390 - 85
10KZ51	♦SAR	391 - 15
10KZ56	♦SAR	391 -155
10KZ62	♦SAR	392 - 63
10KZ66	♦SAR	392 -189
10KZ75	♦SAR	393 - 78
10KZ82	♦SAR	393 -185
10KZ91	♦SAR	394 -106
10KZ100	♦SAR	395 - 16

TYPE No.	MFRS	Pg&Line
10KZ110	♦SAR	395 -104
10KZ120	♦SAR	396 - 45
10KZ130	♦SAR	396 -130
10KZ150	♦SAR	397 -105
10KZ160	♦SAR	397 -157
10KZ180	♦SAR	398 -124
10KZ200	♦SAR	399 - 16
10L15	EDL	410 -217
10L20	EDL	414 -201
10L25	EDL	417 -112
10L30	EDL	419 - 76
10L35	EDL	420 -174
10L40	EDL	421 -159
10L45	EDL	422 -187
10L50	EDL	423 -104
10L55	EDL	424 - 93
10L60	EDL	424 -156
10L65	EDL	425 - 38
10L70	EDL	425 - 73
10L75	EDL	425 -137
10L80	EDL	426 - 30
10L85	EDL	426 -140
10L90	EDL	426 -158
10L95	EDL	426 -201
10L100	EDL	427 - 57
10L110	EDL	428 - 6
10L120	EDL	428 - 71
10L130	EDL	428 -165
10L140	EDL	428 -199
10L150	EDL	429 - 44
10L160	EDL	429 -193
10L170	EDL	430 - 17
10L180	EDL	430 - 52
10L190	EDL	430 - 75
10L200	EDL	430 -137
10L210	EDL	431 - 5
10L220	EDL	431 - 21
10L230	EDL	431 - 38
10L240	EDL	431 - 54
10L250	EDL	431 -107
10L260	EDL	431 -182
10L270	EDL	431 -198
10L280	EDL	431 -211
10L290	EDL	432 - 8
10L300	EDL	432 - 47
10M10	♦INRJ	301 -111
10M20	♦INRJ	301 -134
10M30	♦INRJ	301 -157
10M40	♦INRJ	301 -181
10M50	♦INRJ	301 -201
10M60	♦INRJ	301 -214
10M80	♦INRJ	302 - 25
10M100	♦INRJ	403 -178
10MA10	INRJ	301 -112
10MA20	INRJ	301 -135
10MA30	INRJ	301 -158
10MA40	INRJ	301 -182
10MA60	INRJ	301 -215
10MA80	INRJ	302 - 26
10MA100	INRJ	403 -179
10MA120	INRJ	407 - 30
10MA140	INRJ	409 -153
10MA160	INRJ	412 -142
10Q3	SAR	296 - 57
10R0/18	SSI	252 -185
10R1/18	SSI	252 -187
10R1/52	♦SSI	257 -215
10R1B	EDL	274 -127
10R2/4	♦SSI	252 -188
10R2/18	SSI	238 -143
10R2/66	♦SSI	252 -189
10R2B	EDL	252 -190
	♦SSI	
10R2S	SSI	252 -191
10R3/4	♦SSI	252 -193
10R3/66	♦SSI	252 -194
10R3B	EDL	252 -195
	♦SSI	
10R3S	SSI	252 -196
10R4/3	♦SSI	252 -198
10R4/3C	♦SSI	252 -219
10R4/4	♦SSI	252 -199
10R4/59	♦SSI	252 -220
10R4B	EDL	274 -156
10R4C	♦SSI	252 -200
10R4S	SSI	252 -201
10R5/3	♦SSI	253 - 1
10R5/3D	♦SSI	253 - 17
10R5/5	♦SSI	253 - 2
10R5/61	♦SSI	253 - 18
10R5B	EDL	274 -164
10R5C	♦SSI	253 - 3
10R5S	SSI	253 - 4
10R6/3	♦SSI	253 - 19
10R6/3D	♦SSI	253 - 20
10R6/5	♦SSI	253 - 21
10R6/61	♦SSI	253 - 22
10R6B	EDL	274 -170
10R6C	♦SSI	253 - 23
10R6S	SSI	253 - 24
10R7/3	♦SSI	253 - 25
10R7/3D	♦SSI	253 - 36
10R7/5	♦SSI	253 - 26
10R7/61	♦SSI	253 - 37
10R7B	EDL	274 -177
10R7CD	SSI	253 - 27
10R7S	♦SSI	305 - 10
10R8/3	♦SSI	253 - 38
10R8/3D	♦SSI	253 - 39
10R8/5	♦SSI	253 - 40
10R8/63	♦SSI	253 - 41
10R8B	EDL	274 -179
10R8CD	SSI	253 - 42
10R8S	SSI	253 - 43

TYPE No.	MFRS	Pg&Line
10R9B	EDL	274 -184
10R10B	EDL	401 - 28
10R11B	EDL	405 - 61
10R12B	EDL	405 -193
10R13B	EDL	408 -174
10R14B	EDL	409 - 54
10R15B	EDL	410 -218
10R16B	EDL	412 - 13
10R18B	EDL	413 -194
10R20B	EDL	414 -202
10R22B	EDL	416 - 70
10R24B	EDL	416 -207
10R26B	EDL	418 - 54
10R28B	EDL	418 -151
10R30B	EDL	419 - 77
10R32B	EDL	420 - 51
10R34B	EDL	420 -132
10R36B	EDL	421 - 3
10R38B	EDL	421 - 73
10R40B	EDL	421 -160
10R42B	EDL	422 -100
10R44B	EDL	422 -146
10R46B	EDL	422 -218
10R48B	EDL	423 - 22
10R50B	EDL	423 -105
10RE52	♦SSI	291 -142
10RM60	♦THEF	425 - 18
10RM80	♦THEF	426 -114
10RM100	♦THEF	427 -203
10RM120	♦THEF	428 -146
10RM150	♦THEF	429 -158
10RM200	♦THEF	430 -208
10RM220	♦THEF	431 - 33
10RM250	♦THEF	431 -172
10RO/18	♦SSI	252 -186
10S1S03	SAKJ	375 - 39
10S1S04	SAKJ	375 - 41
10S2S03	SAKJ	374 -193
10S2S04	SAKJ	374 -199
10S20	♦CODI	414 -177
10S30	♦CODI	419 - 43
10S40	♦CODI	421 -128
10S50	♦CODI	423 - 67
10SB050	♦CODI	367 -121
10SB100	CODI	367 -152
10SB200	CODI	367 -190
10SB400	♦CODI	368 - 10
10SB600	♦CODI	368 - 49
10SM1	♦SELI	401 -150
10SM3	♦SELI	402 -147
10SM6	♦SELI	292 -151
10SM15	♦SELI	296 -169
10SM25	♦SELI	299 -148
10SM40	♦SELI	302 - 18
10SM55	♦SELI	303 - 51
10SM70	♦SELI	304 -175
10SM100	♦SELI	306 -131
10SM150	♦SELI	308 - 19
10SM200	♦SELI	308 -209
10TB050	♦CODI	367 -122
10TB100	♦CODI	367 -153
10TB200	♦CODI	367 -191
10TB400	♦CODI	368 - 11
10TB600	♦CODI	368 - 50
10TQ030	♦INR	374 -142
10TQ035	♦INR	374 -144
10TQ040	♦INR	374 -145
10TQ045	♦INR	374 -148
11DQ03	♦INR	374 - 32
	INRJ	
11DQ04	♦INR	374 - 39
	INRJ	
11DQ05	♦INR	374 - 47
	INRJ	
11DQ06	♦INR	374 - 50
	INRJ	
11DQ10	INRJ	374 - 59
11E1	INRJ	280 - 65
11E2	INRJ	280 -154
11E4	INRJ	281 - 60
11R4S	NECJ	294 - 98
11R05S	NECJ	293 -210
11R5S	NECJ	294 -115
11R6S	NECJ	294 -133
11R8S	NECJ	294 -149
11R10S	NECJ	403 - 50
11R12S	NECJ	406 -169
12A6F1	♦SCN	295 -114
12A6F	♦SCN	295 -115
12A8F1	♦SCN	295 -153
12A8F	♦SCN	295 -154
12A10F1	♦SCN	403 - 55
12A10F	♦SCN	403 - 56
12A50	SOD	294 -176
12A100	SOD	294 -204
12A150	♦SOD	295 - 9
12A200	SOD	295 - 17
12A300	♦SOD	295 - 44
12A400	SOD	295 - 68
12A500	♦SOD	295 - 96
12A600	SOD	295 -117
12A800	SOD	295 -155
12A900	SOD	295 -183
12A1000	SOD	403 - 73
12BG11	♦TOSJ	258 - 77
12BH11	♦TOSJ	258 - 78
12CC12	♦TOSJ	295 - 10
12CD12	♦TOSJ	295 - 11
12CF11	TOSJ	295 -166
12CH1FM	NECE	271 -124
12CH1M	NECE	251 -136
	♦NECJ	
12CH2FM	NECE	271 -127

TYPE No.	MFRS	Pg&Line
12CH2M	NECE	251 -137
	♦NECJ	
12CH3FM	NECE	271 -130
12CH3M	NECE	251 -138
	♦NECJ	
12CH4FM	NECE	271 -133
12CH4M	NECE	251 -141
	♦NECJ	
12CTQ030	♦INR	374 -154
12CTQ035	♦INR	374 -156
12CTQ040	♦INR	374 -158
12CTQ045	♦INR	294 -174
12DG11	♦TOSJ	259 - 73
12DH11	♦TOSJ	259 - 74
12F5	INR	294 -168
12F5B	INR	294 -191
12F10	♦INR	294 -209
12F10B	INR	295 - 1
12F20	♦INR	295 - 22
12F20B	INR	295 - 36
12F40	♦INR	295 - 73
12F40B	INR	295 - 89
12F60	♦INR	295 -122
12F60B	INR	295 -136
12F80	♦INR	295 -161
12F80B	INR	261 - 98
12F100	♦INR	403 - 63
12F100B	INR	261 -148
12FC12	♦TOSJ	295 - 46
12FD12	♦TOSJ	295 - 47
12FH1S	NECJ	262 - 49
12FH2S	NECJ	262 - 59
12FH3S	NECJ	262 - 67
12FH4S	NECJ	262 - 74
12FH05S	NECJ	262 - 42
12FL5S05	INR	257 -188
12FL5S10	INR	257 -199
12FL10S02	INRJ	258 - 58
12FL10S05	INR	258 -114
12FL10S10	INR	258 -141
12FL20S02	INRJ	259 - 48
12FL20S05	INR	259 -113
12FL20S10	INR	259 -144
12FL40S02	INR	260 - 17
	INRJ	
12FL40S10	INR	260 - 99
12FL60S02	INRJ	260 -148
12FL60S05	INR	260 -205
12FL60S10	INR	261 - 19
12FL80S05	INR	261 - 62
12FL80S10	INR	261 - 84
12FL100S10	INR	261 -133
12FXF11	♦TOSJ	419 -187
12GC11	♦TOSJ	295 - 69
12GG11	TOSJ	260 - 40
12GH11	TOSJ	260 - 41
12JC11	♦TOSJ	295 -118
12JG11	♦TOSJ	260 -166
12JH11	♦TOSJ	260 -167
12LC11	♦TOSJ	295 -156
12LF11	TOSJ	295 -167
12MF5	INRJ	250 - 92
12MF10	INRJ	250 -123
12MF15	INRJ	250 -136
12MF20	INRJ	250 -145
12NC11	♦TOSJ	403 - 57
12NF11	TOSJ	403 - 68
12QF11	TOSJ	406 -179
12R0/18	SSI	253 -108
12R1/18	SSI	253 -110
12R1/52	♦SSI	258 -153
12R2/4	♦SSI	253 -111
12R2/66	♦SSI	253 -112
12R2B	SSI	253 -113
12R2S	SSI	253 -114
12R3/4	♦SSI	253 -115
12R3/66	♦SSI	253 -116
12R3B	SSI	253 -117
12R3S	SSI	253 -118
12R4/3	♦SSI	253 -120
12R4/3C	♦SSI	253 -125
12R4/4	♦SSI	253 -121
12R4/59	♦SSI	253 -126
12R4C	SSI	253 -122
12R4S	SSI	253 -123
12R5/3	♦SSI	253 -127
12R5/3D	♦SSI	253 -131
12R5/5	♦SSI	253 -128
12R5/61	♦SSI	253 -132
12R5C	SSI	253 -129
12R5S	SSI	253 -130
12R6/3	♦SSI	253 -133
12R6/3D	♦SSI	253 -134
12R6/5	♦SSI	253 -135
12R6/61	♦SSI	253 -136
12R6C	SSI	253 -137
12R6S	SSI	253 -138
12R7/3	♦SSI	253 -139
12R7/3D	♦SSI	253 -142
12R7/5	♦SSI	253 -140
12R7/61	♦SSI	253 -143
12R7CD	SSI	253 -141
12R7S	♦SSI	305 - 12
12R8/3	♦SSI	253 -144
12R8/3D	♦SSI	253 -145
12R8/5	♦SSI	253 -146
12R8/63	♦SSI	253 -147
12R8CD	SSI	253 -148
12R8S	SSI	253 -149
12R52	SSI	258 -154
12RH1S	NECJ	262 - 50
12RH2S	NECJ	262 - 60
12RH3S	NECJ	262 - 68
12RH4S	NECJ	262 - 75

TYPE No.	MFRS	Pg&Line
12RH05S	NECJ	262 - 43
12RO/18	♦SSI	253 -109
12SM1	♦SELI	406 - 36
12SM3	♦SELI	406 -114
12SM6	♦SELI	402 -219
12SM15	♦SELI	403 - 81
12SM25	♦SELI	403 -124
12SM40	♦SELI	403 -173
12SM55	♦SELI	403 -210
12SM70	♦SELI	404 - 3
12SM100	♦SELI	404 - 44
12SM150	♦SELI	404 - 85
12SM200	♦SELI	404 -117
12TB050	♦CODI	368 -110
12TB100	♦CODI	368 -123
12TB200	♦CODI	368 -140
12TB400	♦CODI	368 -160
12TB600	♦CODI	368 -175
15A50	♦SOD	296 - 32
15A100	♦SOD	296 - 50
15A200	♦SOD	296 - 82
15A400	♦SOD	296 -119
15A600	♦SOD	296 -155
15A800	♦SOD	296 -171
15B4B41	TOSJ	296 - 55
15BG15	TOSJ	262 -150
15BL11	TOSJ	262 - 8
15CC11	♦TOSJ	296 - 72
15CD11	♦TOSJ	296 - 73
15CG15	TOSJ	262 -162
15CL11	TOSJ	262 - 11
15D4B41	TOSJ	296 - 91
15DF4	INRJ	261 -206
15DF6	INRJ	261 -207
15DG15	TOSJ	262 -163
15DL11	TOSJ	262 - 14
15FC11	♦TOSJ	296 -111
15FD11	♦TOSJ	296 -112
15FWJ11	TOSJ	262 -134
15G4B41	TOSJ	296 -134
15GWJ11	TOSJ	262 -137
15IP02	♦GIC	296 - 83
15IP04	♦GIC	296 -120
15IP005	♦GIC	296 - 33
15IP06	♦GIC	296 -156
15IP08	♦GIC	296 -172
15IP10	♦GIC	403 - 82
15J4B41	TOSJ	296 -162
15KP17	♦GSE	338 - 68
15KP17A	♦GSE	338 - 69
15KP18	♦GSE	338 - 70
15KP18A	♦GSE	338 - 71
15KP20	♦GSE	338 - 72
15KP20A	♦GSE	338 - 73
15KP22	♦GSE	338 - 74
15KP22A	♦GSE	338 - 75
15KP24	♦GSE	338 - 76
15KP24A	♦GSE	338 - 77
15KP26	♦GSE	338 - 78
15KP26A	♦GSE	338 - 79
15KP28	♦GSE	338 - 80
15KP28A	♦GSE	338 - 81
15KP30	♦GSE	338 - 82
15KP30A	♦GSE	338 - 83
15KP33	♦GSE	338 - 84
15KP33A	♦GSE	338 - 85
15KP36	♦GSE	338 - 86
15KP36A	♦GSE	338 - 87
15KP40	♦GSE	338 - 88
15KP40A	♦GSE	338 - 89
15KP43	♦GSE	338 - 90
15KP43A	♦GSE	338 - 91
15KP45	♦GSE	338 - 92
15KP45A	♦GSE	338 - 93
15KP48	♦GSE	338 - 94
15KP48A	♦GSE	338 - 95
15KP51	♦GSE	338 - 96
15KP51A	♦GSE	338 - 97
15KP54	♦GSE	338 - 98
15KP54A	♦GSE	338 - 99
15KP58	♦GSE	338 -100
15KP58A	♦GSE	338 -101
15KP60	♦GSE	338 -102
15KP60A	♦GSE	338 -103
15KP64	♦GSE	338 -104
15KP64A	♦GSE	338 -105
15KP70	♦GSE	338 -106
15KP70A	♦GSE	338 -107
15KP75	♦GSE	338 -108
15KP75A	♦GSE	338 -109
15KP78	♦GSE	338 -110
15KP78A	♦GSE	339 - 1
15KP85	♦GSE	339 - 2
15KP85A	♦GSE	339 - 3
15KP90	♦GSE	339 - 4
15KP90A	♦GSE	339 - 5
15KP100	♦GSE	339 - 6
15KP100A	♦GSE	339 - 7
15KP110	♦GSE	339 - 8
15KP110A	♦GSE	339 - 9
15KP120	♦GSE	339 -10
15KP120A	♦GSE	339 -11
15KP130	♦GSE	339 -12
15KP130A	♦GSE	339 -13
15KP150	♦GSE	339 -14
15KP150A	♦GSE	339 -15
15KP160	♦GSE	339 -16
15KP160A	♦GSE	339 -17
15KP170	♦GSE	339 -18
15KP170A	♦GSE	339 -19
15KP180	♦GSE	339 -20
15KP180A	♦GSE	339 -21
15KP200	♦GSE	339 -22
15KP200A	♦GSE	339 -23

Δ-Registered with JEDEC by this manufacturer

♦-Mfr's data sheet available in microfilm service

1. TYPE No. CROSS INDEX

IN TYPE NUMBER SEQUENCE

TYPE No.	MFRS	Pg&Line
15KP220	♦GSE	339 - 24
15KP220A	♦GSE	339 - 25
15KP240	♦GSE	339 - 26
15KP240A	♦GSE	339 - 27
15KP260	♦GSE	339 - 28
15KP260A	♦GSE	339 - 29
15KP280	♦GSE	339 - 30
15KP280A	♦GSE	339 - 31
15KS17	♦SCN	318 - 44
15KS17A	♦SCN	318 - 45
15KS18	♦SCN	318 - 46
15KS18A	♦SCN	318 - 47
15KS20	♦SCN	318 - 48
15KS20A	♦SCN	318 - 49
15KS22	♦SCN	318 - 50
15KS22A	♦SCN	318 - 51
15KS24	♦SCN	318 - 52
15KS24A	♦SCN	318 - 53
15KS26	♦SCN	318 - 54
15KS26A	♦SCN	318 - 55
15KS28A	♦SCN	318 - 56
15KS30	♦SCN	318 - 57
15KS30A	♦SCN	318 - 58
15KS33	♦SCN	318 - 59
15KS33A	♦SCN	318 - 60
15KS36	♦SCN	318 - 61
15KS36A	♦SCN	318 - 62
15KS40	♦SCN	318 - 63
15KS40A	♦SCN	318 - 64
15KS43	♦SCN	318 - 65
15KS43A	♦SCN	318 - 66
15KS45	♦SCN	318 - 67
15KS45A	♦SCN	318 - 68
15KS48	♦SCN	318 - 69
15KS48A	♦SCN	318 - 70
15KS51	♦SCN	318 - 71
15KS51A	♦SCN	318 - 72
15KS54	♦SCN	318 - 73
15KS54A	♦SCN	318 - 74
15KS58	♦SCN	318 - 75
15KS58A	♦SCN	318 - 76
15KS60	♦SCN	318 - 77
15KS60A	♦SCN	318 - 78
15KS64	♦SCN	318 - 79
15KS64A	♦SCN	318 - 80
15KS70	♦SCN	318 - 81
15KS70A	♦SCN	318 - 82
15KS75	♦SCN	318 - 83
15KS75A	♦SCN	318 - 84
15KS78	♦SCN	318 - 85
15KS78A	♦SCN	318 - 86
15KS85	♦SCN	318 - 87
15KS85A	♦SCN	318 - 88
15KS90	♦SCN	318 - 89
15KS90A	♦SCN	318 - 90
15KS100	♦SCN	318 - 91
15KS100A	♦SCN	318 - 92
15KS110	♦SCN	318 - 93
15KS110A	♦SCN	318 - 94
15KS120	♦SCN	318 - 95
15KS120A	♦SCN	318 - 96
15KS130	♦SCN	318 - 97
15KS130A	♦SCN	318 - 98
15KS150	♦SCN	318 - 99
15KS150A	♦SCN	318 -100
15KS160	♦SCN	318 -101
15KS160A	♦SCN	318 -102
15KS170	♦SCN	318 -103
15KS170A	♦SCN	318 -104
15KS180	♦SCN	318 -105
15KS180A	♦SCN	318 -106
15KS200	♦SCN	318 -107
15KS200A	♦SCN	318 -108
15KS220	♦SCN	318 -109
15KS220A	♦SCN	318 -110
15KS240	♦SCN	319 - 1
15KS240A	♦SCN	319 - 2
15KS260	♦SCN	319 - 3
15KS260A	♦SCN	319 - 4
15KS280	♦SCN	319 - 5
15KS280A	♦SCN	319 - 6
15L15	EDL	411 - 6
15L20	EDL	414 -208
15L25	EDL	417 -113
15L30	EDL	419 - 79
15L35	EDL	420 -177
15L40	EDL	421 -165
15L45	EDL	422 -190
15L50	EDL	423 -110
15L55	EDL	424 - 94
15L60	EDL	424 -160
15L65	EDL	425 - 39
15L70	EDL	425 - 75
15L75	EDL	425 -140
15L80	EDL	426 - 36
15L85	EDL	426 -142
15L90	EDL	426 -160
15L95	EDL	426 -203
15L100	EDL	427 - 65
15L110	EDL	428 - 8
15L120	EDL	428 - 76
15L130	EDL	428 -167
15L140	EDL	428 -202
15L150	EDL	429 - 50
15L160	EDL	429 -198
15L170	EDL	430 - 19
15L180	EDL	430 - 55
15L190	EDL	430 - 77
15L200	EDL	430 -143
15L210	EDL	431 - 6
15L220	EDL	431 - 23
15L230	EDL	431 - 39
15L240	EDL	431 - 56
15L250	EDL	431 -111

TYPE No.	MFRS	Pg&Line
15L260	EDL	431 -184
15L270	EDL	431 -199
15L280	EDL	431 -213
15L290	EDL	432 - 9
15L300	EDL	432 - 50
15MA300	INRJ	419 -189
15MA400	INRJ	422 - 44
15MLA160	INRJ	263 -149
15MLA180	INRJ	263 -150
15MLA200	INRJ	263 -151
15N25A9	EDL	417 -114
15N25A	EDL	417 -115
15P1	MISI	247 - 75
15Q3	SAR	296 - 71
15R0/18	SSI	253 -152
15R1/18	SSI	253 -154
15R1/52	♦SSI	258 -159
15R2/4	♦SSI	253 -155
15R2/66	♦SSI	253 -156
15R2B	SSI	253 -157
15R2S	SSI	253 -158
15R3/4	♦SSI	253 -160
15R3/66	♦SSI	253 -161
15R3B	SSI	253 -162
15R3S	SSI	253 -163
15R4/3	♦SSI	253 -166
15R4/3C	♦SSI	253 -184
15R4/4	♦SSI	253 -167
15R4/59	♦SSI	253 -185
15R4C	SSI	253 -168
15R4S	SSI	253 -169
15R5/3	♦SSI	253 -186
15R5/3D	♦SSI	253 -200
15R5/5	♦SSI	253 -187
15R5/61	♦SSI	253 -201
15R5C	SSI	253 -188
15R5S	SSI	253 -189
15R6/3	♦SSI	253 -202
15R6/3D	♦SSI	253 -203
15R6/5	♦SSI	253 -204
15R6/61	♦SSI	253 -205
15R6C	SSI	253 -206
15R6S	SSI	253 -207
15R7/3	♦SSI	253 -208
15R7/3D	♦SSI	253 -217
15R7/5	♦SSI	253 -209
15R7/61	♦SSI	253 -218
15R7CD	SSI	253 -210
15R7S	♦SSI	305 - 13
15R8/3	♦SSI	253 -219
15R8/3D	♦SSI	253 -220
15R8/5	♦SSI	254 - 1
15R8/63	♦SSI	254 - 2
15R8CD	SSI	254 - 3
15R8S	SSI	254 - 4
15R52	SSI	258 -160
15RO/18	♦SSI	253 -153
15SB03S	NECE	262 - 30
	NECJ	
15SB04M	NECE	436 - 47
	♦NECJ	
15SB04S	NECE	262 - 35
	NECJ	
15SM6	♦SELI	406 -142
15SM15	♦SELI	406 -183
15SM25	♦SELI	406 -211
15SM40	♦SELI	407 - 26
15SM55	♦SELI	407 - 60
15SM70	♦SELI	407 - 80
15SM100	♦SELI	407 -126
15SM150	♦SELI	407 -178
15SM200	♦SELI	407 -212
15TB050	♦CODI	368 -203
15TB100	♦CODI	368 -220
15TB200	♦CODI	369 - 26
15TB400	♦CODI	369 - 53
15TB600	♦CODI	369 - 78
16F5	♦INR	296 -184
16F10	♦INR	296 -195
16F20	♦INR	296 -211
16F40	♦INR	297 - 9
16F60	♦INR	297 - 23
16F80	♦INR	297 - 38
16F100	♦INR	403 - 96
16FL5S02	INR	257 -147
16FL5S05	INR	257 -186
16FL5S10	INR	257 -198
16FL10S02	INR	258 - 57
	INRJ	
16FL10S05	INR	258 -112
16FL10S10	INR	258 -137
16FL20S02	INR	259 - 46
	INRJ	
16FL20S05	INR	259 -111
16FL20S10	INR	259 -134
16FL40S02	INR	260 - 16
	INRJ	
16FL40S10	INR	260 - 93
16FL60S02	INR	260 -147
	INRJ	
16FL60S05	INR	260 -202
16FL60S10	INR	261 - 8
16FL80S05	INR	261 - 60
16FL80S10	INR	261 - 80
16FL100S05	INR	261 -121
16FL100S10	INR	261 -131
16G010F	♦GBL	314 - 11
16G011F	♦GBL	314 - 21
16G011L	♦GBL	314 - 22
16KQ30(B)	INRJ	374 -170
16KQ40(B)	INRJ	374 -180
16KQ50(B)	INRJ	374 -184
16KQ60(B)	INRJ	374 -186
16MQ30	INRJ	374 -171

TYPE No.	MFRS	Pg&Line
16MQ40	INRJ	374 -181
16MQ50	INRJ	374 -185
16MQ60	INRJ	374 -187
16P1	HSE	247 -110
16P1#B	MISI	231 -208
16P2	HSE	233 - 40
17P2	HSE	233 - 41
18P2	HSE	233 - 42
19P1	MISI	244 -121
19P2	HSE	233 -197
20A6F	♦SCN	297 -193
20A8F	♦SCN	297 -212
20A10F	♦SCN	403 -108
20A50	SOD	297 - 97
20A100	SOD	297 -111
20A200	SOD	297 -136
20A400	SOD	297 -162
20A600	SOD	297 -196
20A800	SOD	297 -214
20C1#B	♦DII	286 - 23
20C1R10	SAKJ	238 -183
20C1R20	SAKJ	239 - 79
20C1R30	SAKJ	239 -125
20C1S10	SAKJ	238 -184
20C1S20	SAKJ	239 - 80
20C1S30	SAKJ	239 -126
20C2#B	♦DII	286 - 64
20C2R10	SAKJ	238 -198
20C2R20	SAKJ	239 - 81
20C2R30	SAKJ	239 -127
20C2S10	SAKJ	238 -199
20C2S20	SAKJ	239 - 82
20C2S30	SAKJ	239 -128
20C4#B	♦DII	286 -114
20C6#B	♦DII	286 -162
20CS04M	NECE	436 - 48
	♦NECJ	
20CTQ30	♦INR	297 - 90
20CTQ35	♦INR	297 - 91
20CTQ40	♦INR	297 - 93
20CTQ45	♦INR	297 - 94
20D1	INR	286 - 38
20D2	INR	286 - 79
20D4	INR	286 -127
20D05	INR	286 - 3
20D6	INR	286 -175
20D8	INR	286 -210
20D10	INR	402 -124
20E1	INRJ	285 -174
20E1R20	SAKJ	239 - 83
20E1R40	SAKJ	239 -175
20E1R60	SAKJ	240 - 29
20E1S20	SAKJ	239 - 84
20E1S40	SAKJ	239 -176
20E1S60	SAKJ	240 - 30
20E2	INRJ	285 -176
20E2R20	SAKJ	239 - 85
20E2R40	SAKJ	239 -177
20E2R60	SAKJ	240 - 31
20E2S20	SAKJ	239 - 86
20E2S40	SAKJ	239 -178
20E2S60	SAKJ	240 - 32
20E4	INRJ	285 -179
20E6	INRJ	285 -180
20E8	INRJ	285 -181
20E10	INRJ	402 - 90
20F1R07	SAKJ	238 -126
20F1R15	SAKJ	239 - 19
20F1S07	SAKJ	238 -127
20F1S15	SAKJ	239 - 20
20F2R07	SAKJ	238 -128
20F2R15	SAKJ	239 - 21
20F2S07	SAKJ	238 -129
20F2S15	SAKJ	239 - 22
20FQ020	♦INR	374 -215
	INRJ	
20FQ030	♦INR	374 -212
	INRJ	
20FQ035	♦INR	374 -213
20FQ040	♦INR	374 -214
20FQ045	♦INR	374 -217
	INRJ	
20H3	SAR	291 -216
20J3P	SAR	295 - 23
20JH3	SAR	304 -206
20L15	EDL	411 - 8
20L20	EDL	414 -212
20L25	EDL	417 -116
20L30	EDL	419 - 81
20L35	EDL	420 -178
20L40	EDL	421 -169
20L45	EDL	422 -192
20L50	EDL	423 -117
20L55	EDL	424 - 95
20L60	EDL	424 -166
20L65	EDL	425 - 41
20L70	EDL	425 - 78
20L75	EDL	425 -144
20L80	EDL	426 - 37
20L85	EDL	426 -143
20L90	EDL	426 -161
20L95	EDL	426 -204
20L100	EDL	427 - 71
20L110	EDL	428 - 9
20L120	EDL	428 - 80
20L130	EDL	428 -168
20L140	EDL	428 -203
20L150	EDL	429 - 54
20L160	EDL	429 -199
20L170	EDL	430 - 20
20L180	EDL	430 - 57
20L190	EDL	430 - 78
20L200	EDL	430 -146
20L210	EDL	431 - 7

TYPE No.	MFRS	Pg&Line
20L220	EDL	431 - 24
20L230	EDL	431 - 40
20L240	EDL	431 - 57
20L250	EDL	431 -113
20L260	EDL	431 -185
20L270	EDL	431 -200
20L280	EDL	431 -214
20L290	EDL	432 - 10
20L300	EDL	432 - 52
20M10	♦INRJ	303 - 95
20M20	♦INRJ	303 -114
20M30	♦INRJ	303 -134
20M40	♦INRJ	303 -160
20M50	♦INRJ	303 -174
20M60	♦INRJ	303 -191
20M80	♦INRJ	303 -210
20M100	♦INRJ	403 -219
20MA10	INRJ	303 - 89
20MA20	INRJ	303 -108
20MA30	INRJ	303 -126
20MA40	INRJ	303 -154
20MA60	INRJ	303 -185
20MA80	INRJ	303 -207
20MA100	INRJ	403 -216
20MA120	INRJ	407 - 72
20MA140	INRJ	409 -179
20MA160	INRJ	412 -166
20MLA60	INRJ	263 -195
20MLA80	INRJ	263 -198
20MLA100	INRJ	263 -200
20MLA120	INRJ	263 -202
20Q3	SAR	296 - 93
20RM60	♦THEF	425 - 19
20RM80	♦THEF	426 -115
20RM100	♦THEF	427 -204
20RM120	♦THEF	428 -147
20RM150	♦THEF	429 -159
20RM200	♦THEF	430 -209
20RM220	♦THEF	431 - 34
20RM250	♦THEF	431 -173
20S1S03	SAKJ	375 - 82
20S1S04	SAKJ	375 - 83
20S2S03	SAKJ	375 - 40
20S2S04	SAKJ	375 - 42
21DQ03	♦INR	374 - 62
	INRJ	
21DQ04	♦INR	374 - 63
	INRJ	
21DQ05	INRJ	374 - 64
21DQ06	INRJ	374 - 65
21FQ030	♦INR	375 - 10
	INRJ	
21FQ035	♦INR	299 -197
21FQ040	♦INR	299 -209
21FQ045	♦INR	375 - 25
	INRJ	
21PT60	INRJ	297 -200
21R4S	NECJ	297 -173
21R05S	NECJ	297 -104
21R5S	NECJ	297 -189
21R6S	NECJ	297 -201
21R8S	NECJ	298 - 3
21R10S	NECJ	403 -116
21R12S	NECJ	406 -201
22A50	SOD	298 - 12
22A100	SOD	298 - 17
22A200	SOD	298 - 27
22A400	SOD	298 - 40
22A600	SOD	298 - 48
22A800	SOD	298 - 57
22CC11	♦TOSJ	298 - 21
22CD11	♦TOSJ	298 - 22
22FC11	♦TOSJ	298 - 34
22FD11	♦TOSJ	298 - 35
24CH1FM	NECE	271 -125
24CH2FM	NECE	271 -128
24CH3FM	NECE	271 -131
24CH4FM	NECE	271 -134
25CC13	♦TOSJ	298 -165
25CD13	♦TOSJ	298 -166
25D4B41	TOSJ	370 - 4
25DF10	♦CODI	248 -142
25DF15	♦CODI	248 -151
25DF20	♦CODI	248 -162
25DF25	♦CODI	248 -166
25DF30	♦CODI	248 -171
25FC13	♦TOSJ	299 - 8
25FD13	♦TOSJ	299 - 9
25FXF11	♦TOSJ	419 -190
25G4B41	TOSJ	370 - 41
25GC12	♦TOSJ	299 - 34
25J4B41	TOSJ	370 - 76
25JC12	♦TOSJ	299 - 99
25L15	♦EDL	411 - 15
25L20	EDL	414 -220
25L25	♦EDL	417 -123
25L30	EDL	419 - 90
25L35	EDL	420 -183
25L40	EDL	421 -176
25L45	EDL	422 -200
25L50	EDL	423 -125
25L55	EDL	424 - 98
25L60	EDL	424 -177
25L65	EDL	425 - 46
25L70	EDL	425 - 79
25L75	EDL	425 -146
25L80	EDL	426 - 45
25L85	EDL	426 -144
25L90	EDL	426 -162
25L95	EDL	426 -205
25L100	EDL	427 - 79
25L110	EDL	428 - 11
25L120	EDL	428 - 88
25L130	EDL	428 -170

TYPE No.	MFRS	Pg&Line
25L140	EDL	428 -207
25L150	EDL	429 - 63
25L160	EDL	429 -204
25L170	EDL	430 - 23
25L180	EDL	430 - 60
25L190	EDL	430 - 80
25L200	EDL	430 -154
25L210	EDL	431 - 8
25L220	EDL	431 - 26
25L230	EDL	431 - 41
25L240	EDL	431 - 59
25L250	EDL	431 -118
25L260	EDL	431 -187
25L270	EDL	431 -201
25L280	EDL	431 -216
25L290	EDL	432 - 11
25L300	EDL	432 - 58
25LC12	TOSJ	299 -150
25LF11	♦TOSJ	299 -167
25NC12	♦TOSJ	403 -126
25NF11	♦TOSJ	403 -140
25PW5	INRJ	298 -108
25PW10	INRJ	298 -137
25PW20	INRJ	298 -179
25PW30	INRJ	299 - 10
25PW40	INRJ	299 - 36
25PW50	INRJ	299 - 83
25PW60	INRJ	299 -101
25QF11	♦TOSJ	407 - 1
26P1	MISI	249 - 29
28CPQ030	♦INR	298 - 95
28CPQ040	♦INR	298 -102
28CPQ050	♦INR	375 -164
28CPQ060	♦INR	375 -166
30A6F	♦SCN	300 -138
30A8F	♦SCN	300 -155
30A10F	♦SCN	403 -148
30AD50	♦SOD	300 - 18
30AD100	♦SOD	300 - 47
30AD200	♦SOD	300 - 82
30AD400	♦SOD	300 -119
30AD600	♦SOD	300 -144
30AD800	♦SOD	300 -160
30BG11	♦TOSJ	258 - 79
30BG15	TOSJ	263 - 40
30BL11	TOSJ	262 - 9
30CG15	TOSJ	263 - 41
30CL11	TOSJ	262 - 12
30CTQ30	♦INR	299 -195
30CTQ35	♦INR	299 -198
30CTQ40	♦INR	299 -210
30CTQ45	♦INR	299 -214
30D1	INRJ	288 - 35
30D2	INRJ	288 -115
30D4	INRJ	288 -213
30DF1	INRJ	247 - 74
30DF2	INRJ	247 -123
30DG11	♦TOSJ	259 - 75
30DG15	TOSJ	263 - 42
30DL1	♦INR	247 - 89
	INRJ	
30DL2	♦INR	247 -139
	INRJ	
30DL4	INRJ	247 -170
30DL11	TOSJ	262 - 15
30FH1S	NECJ	262 - 51
30FH2S	NECJ	262 - 61
30FH3S	NECJ	262 - 69
30FH4S	NECJ	262 - 76
30FQ030	♦INR	375 - 12
	INRJ	
30FQ030A	♦INR	299 -196
30FQ035	♦INR	299 -201
30FQ035A	♦INR	299 -202
30FQ040	♦INR	299 -211
30FQ040A	♦INR	299 -212
30FQ045	♦INR	375 - 29
	INRJ	
30FQ045A	♦INR	299 -220
30FWJ2C12	TOSJ	262 -135
30FWJ11	TOSJ	263 - 32
30GG11	♦TOSJ	260 - 42
30GWJ2C12	TOSJ	262 -138
30GWJ11	TOSJ	263 - 36
30H3	SAR	292 - 26
30HB050	♦CODI	370 -150
30HB100	♦CODI	370 -158
30HB200	♦CODI	370 -171
30HB400	♦CODI	370 -189
30HB600	♦CODI	370 -208
30HB800	♦CODI	370 -219
30J3P	SAR	295 - 50
30JG11	♦TOSJ	260 -168
30JH3	SAR	304 -207
30L15	EDL	411 - 27
30L20	EDL	415 - 12
30L25	EDL	417 -128
30L30	EDL	419 -103
30L35	EDL	420 -187
30L40	EDL	421 -188
30L45	EDL	422 -202
30L50	EDL	423 -133
30L55	EDL	424 - 99
30L60	EDL	424 -183
30L65	EDL	425 - 47
30L70	EDL	425 - 81
30L75	EDL	425 -149
30L80	EDL	426 - 53
30L85	EDL	426 -145
30L90	EDL	426 -164
30L95	EDL	426 -206
30L100	EDL	427 - 89
30L110	EDL	428 - 13
30L120	EDL	428 - 95

Δ-Registered with JEDEC by this manufacturer

♦-Mfr's data sheet available in microfilm service

1. TYPE No. CROSS INDEX

IN TYPE NUMBER SEQUENCE

TYPE No.	MFRS	Pg&Line
30L130	EDL	428 -171
30L140	EDL	428 -208
30L150	EDL	429 - 73
30L160	EDL	429 -206
30L170	EDL	430 - 24
30L180	EDL	430 - 61
30L190	EDL	430 - 83
30L200	EDL	430 -160
30L210	EDL	431 - 9
30L220	EDL	431 - 27
30L230	EDL	431 - 42
30L240	EDL	431 - 60
30L250	EDL	431 -123
30L260	EDL	431 -188
30L270	EDL	431 -202
30L280	EDL	431 -217
30L290	EDL	432 - 12
30L300	EDL	432 - 65
30MF5	INRJ	250 - 93
30MF10	INRJ	250 -124
30MF15	INRJ	250 -137
30MF20	INRJ	250 -146
30Q3	SAR	296 -108
30QHC030	♦INRJ	374 -172
30QHC045	♦INRJ	374 -183
30RH1S	NECJ	262 - 52
30RH2S	NECJ	262 - 62
30RH3S	NECJ	262 - 70
30RH4S	NECJ	262 - 77
30RH05S	NECJ	262 - 44
30S1S03	SAKJ	375 -116
30S1S04	SAKJ	375 -117
30SB03SA	NECE	262 - 31
	NECJ	
30SB04SA	NECE	262 - 36
	NECJ	
30TB050	♦CODI	370 -155
30TB100	♦CODI	370 -163
30TB200	♦CODI	370 -176
30TB400	♦CODI	370 -195
30TB600	♦CODI	370 -212
31DQ03	♦INR	374 - 75
	INRJ	
31DQ04	♦INR	374 - 80
	INRJ	
31DQ05	♦INR	374 - 85
	INRJ	
31DQ06	♦INR	374 - 88
	INRJ	
31MQ30	INRJ	375 - 11
31MQ40	INRJ	375 - 19
35AD50	♦SOD	300 -196
35AD100	♦SOD	300 -206
35AD200	♦SOD	300 -219
35AD400	♦SOD	301 - 15
35AD600	♦SOD	301 - 27
35AD800	♦SOD	301 - 36
40A50	♦SOD	301 - 90
40A100	♦SOD	301 -104
40A150	♦SOD	301 -123
40A200	♦SOD	301 -127
40A300	♦SOD	301 -155
40A400	♦SOD	301 -174
40A500	♦SOD	301 -200
40A600	♦SOD	301 -209
40AD50	♦SOD	301 - 94
40AD100	♦SOD	301 -108
40AD200	♦SOD	301 -130
40AD400	♦SOD	301 -176
40AD600	♦SOD	301 -210
40AD800	♦SOD	302 - 20
40C1R10	SAKJ	238 -200
40C1R20	SAKJ	238 - 9
40C1R30	SAKJ	239 -129
40C1S10	SAKJ	238 -201
40C1S20	SAKJ	239 - 87
40C1S30	SAKJ	239 -130
40C2R10	SAKJ	271 - 76
40C2R20	SAKJ	271 - 80
40C2R30	SAKJ	271 - 84
40C2S10	SAKJ	271 - 77
40C2S20	SAKJ	271 - 81
40C2S30	SAKJ	271 - 85
40CDQ020	♦INR	375 -181
40CDQ030	♦INR	375 -182
40CDQ035	♦INR	375 -183
40CDQ040	♦INR	375 -184
40CDQ045	♦INR	375 -185
40D1	♦INR	290 - 32
	INRJ	
40D2	♦INR	290 - 44
	INRJ	
40D4	♦INR	290 - 58
	INRJ	
40D6	♦INR	290 - 70
	INRJ	
40D8	♦INR	290 - 76
	INRJ	
40E1R20	SAKJ	239 - 88
40E1R40	SAKJ	239 -179
40E1R60	SAKJ	240 - 33
40E1S20	SAKJ	239 - 89
40E1S40	SAKJ	239 -180
40E1S60	SAKJ	240 - 34
40E2R20	SAKJ	271 - 82
40E2R40	SAKJ	271 - 86
40E2R60	SAKJ	271 - 88
40E2S20	SAKJ	271 - 83
40E2S40	SAKJ	271 - 87
40E2S60	SAKJ	271 - 89
40F1R07	♦SAKJ	238 -130
40F1R15	♦SAKJ	239 - 23
40F1S07	♦SAKJ	238 -131
40F1S15	♦SAKJ	239 - 24

TYPE No.	MFRS	Pg&Line
40F2R07	♦SAKJ	271 - 74
40F2R15	♦SAKJ	271 - 78
40F2S07	♦SAKJ	271 - 90
40F2S15	♦SAKJ	271 - 79
40H3	SAR	292 - 63
40HF5	♦INR	301 - 97
	INRJ	
40HF10	♦INR	301 -117
	INRJ	
40HF20	♦INR	301 -141
	INRJ	
40HF30	♦INR	301 -165
	INRJ	
40HF40	♦INR	301 -187
	INRJ	
40HF50	♦INR	301 -203
	INRJ	
40HF60	♦INR	302 - 3
	INRJ	
40HF70	INRJ	302 - 16
40HF80	♦INR	302 - 35
	INRJ	
40HF90	INRJ	302 - 44
40HF100	♦INR	403 -185
	INRJ	
40HF120	INR	407 - 27
40HFL10S02	INR	258 - 49
	INRJ	
40HFL10S05	INR	258 - 74
	INRJ	
40HFL10S10	INR	258 -133
	INRJ	
40HFL20S02	INR	259 - 36
	INRJ	
40HFL20S05	INR	259 - 70
	INRJ	
40HFL20S10	INR	259 -130
	INRJ	
40HFL40S02	INR	260 - 7
	INRJ	
40HFL40S05	INR	260 - 37
	INRJ	
40HFL40S10	INR	260 - 89
	INRJ	
40HFL60S02	INR	260 -144
	INRJ	
40HFL60S05	INR	260 -164
	INRJ	
40HFL60S10	INR	261 - 4
	INRJ	
40HFL80S05	INR	261 - 51
	INRJ	
40HFL80S10	INR	261 - 74
	INRJ	
40HFL100S05	INR	261 -114
	INRJ	
40HFL100S10	INR	261 -129
	INRJ	
40J3P	SAR	295 - 74
40JH3	SAR	304 -208
40L15	EDL	411 - 34
40L20	EDL	415 - 20
40L25	EDL	417 -133
40L30	EDL	419 -109
40L35	EDL	420 -188
40L40	EDL	421 -192
40L45	EDL	422 -204
40L50	EDL	423 -146
40L55	EDL	424 -102
40L60	EDL	424 -191
40L65	EDL	425 - 48
40L70	EDL	425 - 88
40L75	EDL	425 -152
40L80	EDL	426 - 62
40L85	EDL	426 -146
40L90	EDL	426 -168
40L95	EDL	426 -207
40L100	EDL	427 -101
40L110	EDL	428 - 14
40L120	EDL	428 -102
40L130	EDL	428 -172
40L140	EDL	428 -213
40L150	EDL	429 - 77
40L160	EDL	429 -209
40L170	EDL	430 - 25
40L180	EDL	430 - 62
40L190	EDL	430 - 84
40L200	EDL	430 -162
40L210	EDL	431 - 10
40L220	EDL	431 - 28
40L230	EDL	431 - 43
40L240	EDL	431 - 61
40L250	EDL	431 -125
40L260	EDL	431 -189
40L270	EDL	431 -203
40L280	EDL	431 -218
40L290	EDL	432 - 13
40L300	EDL	432 - 67
40Q3	SAR	296 -135
40Q4	SAR	296 -136
40S2S03	SAKJ	375 -192
40S2S04	SAKJ	375 -193
40SB03SA	NECE	262 - 32
	NECJ	
40SB04SA	NECE	262 - 37
	NECJ	
40SL1	INRJ	262 -127
40SL2	INRJ	262 -128
40SL3	INRJ	262 -129
40SL4	INRJ	262 -130
40SL05	INRJ	262 -126
40SL5	INRJ	262 -131
40SL6	INRJ	262 -132
41F1FM	NECJ	301 -113

TYPE No.	MFRS	Pg&Line
41F2FM	NECJ	301 -136
41F3FM	NECJ	301 -159
41MQ30	INRJ	375 - 47
41MQ40	INRJ	375 - 50
41MQ50	INRJ	375 - 51
41MQ60	INRJ	375 - 52
41R1FM	NECJ	301 -114
41R2FM	NECJ	301 -137
41R3FM	NECJ	301 -160
45M10	♦INRJ	307 - 61
45M20	♦INRJ	307 - 91
45M30	♦INRJ	307 -126
45M40	♦INRJ	307 -156
45M50	♦INRJ	307 -186
45M60	♦INRJ	307 -203
45M80	♦INRJ	308 - 27
45M100	♦INRJ	404 - 93
45MA10	INRJ	307 - 57
45MA20	INRJ	307 - 86
45MA30	INRJ	307 -123
45MA40	INRJ	307 -151
45MA60	INRJ	307 -198
45MA80	INRJ	308 - 22
45MA100	INRJ	404 - 87
45MA120	INRJ	407 -180
45MA140	INRJ	410 - 28
45MA160	INRJ	413 - 3
45MLA60	INRJ	264 - 43
45MLA80	INRJ	264 - 45
45MLA100	INRJ	264 - 47
45MLA120	INRJ	264 - 49
50AD50	♦SOD	302 -122
50AD100	♦SOD	302 -136
50AD200	♦SOD	302 -156
50AD400	♦SOD	302 -192
50AD600	SOD	302 -219
50AD800	♦SOD	303 - 13
50F20	♦CODI	241 -144
50F30	♦CODI	241 -166
50F40	♦CODI	241 -183
50F50	♦CODI	241 -198
50H3	SAR	292 - 87
50HQ020	♦INR	375 - 53
	INRJ	
50HQ030	♦INR	375 - 54
	INRJ	
50HQ035	INR	303 - 58
50HQ040	INR	303 - 62
50J1	SAR	284 -166
50J2P	SAR	294 -114
50J3P	SAR	295 - 98
50JH3	SAR	304 -210
50KZ5.0	♦SAR	379 -102
50KZ5.0A	♦SAR	379 - 4
50KZ6.0	♦SAR	379 -114
50KZ6.0A	♦SAR	379 -103
50KZ6.5	♦SAR	380 - 34
50KZ6.5A	♦SAR	380 - 35
50KZ7.0	♦SAR	380 -140
50KZ7.0A	♦SAR	380 - 37
50KZ7.5	♦SAR	381 - 59
50KZ7.5A	♦SAR	380 -150
50KZ8.0	♦SAR	381 - 64
50KZ8.0A	♦SAR	381 - 61
50KZ8.5	♦SAR	381 -171
50KZ8.5A	♦SAR	381 - 62
50KZ9.0	♦SAR	382 - 57
50KZ9.0A	♦SAR	381 -175
50KZ10	♦SAR	382 -182
50KZ10A	♦SAR	382 - 71
50KZ11	♦SAR	383 - 89
50KZ11A	♦SAR	382 -185
50KZ12	♦SAR	383 -152
50KZ12A	♦SAR	383 -140
50KZ13	♦SAR	384 -145
50KZ13A	♦SAR	384 - 67
50KZ14	♦SAR	385 - 14
50KZ14A	♦SAR	384 -165
50KZ15	♦SAR	385 -129
50KZ15A	♦SAR	385 - 15
50KZ16	♦SAR	385 -171
50KZ16A	♦SAR	385 -130
50KZ17	♦SAR	386 - 75
50KZ17A	♦SAR	385 -172
50KZ18	♦SAR	386 -183
50KZ18A	♦SAR	386 - 76
50KZ20	♦SAR	387 - 97
50KZ20A	♦SAR	386 -188
50KZ22	♦SAR	388 - 38
50KZ22A	♦SAR	387 -131
50KZ24	♦SAR	388 - 51
50KZ24A	♦SAR	388 - 47
50KZ26	♦SAR	388 -154
50KZ26A	♦SAR	388 -153
50KZ28	♦SAR	389 - 64
50KZ28A	♦SAR	388 -156
50KZ30	♦SAR	389 -172
50KZ30A	♦SAR	389 - 67
50KZ33	♦SAR	390 - 83
50KZ33A	♦SAR	389 -174
50KZ36	♦SAR	390 -168
50KZ36A	♦SAR	390 - 84
50KZ40	♦SAR	391 -105
50KZ40A	♦SAR	391 - 16
50KZ43	♦SAR	392 - 61
50KZ43A	♦SAR	391 -154
50KZ45	♦SAR	392 - 62
50KZ45A	♦SAR	392 - 60
50KZ48	♦SAR	392 -162
50KZ48A	♦SAR	392 -161
50KZ51	♦SAR	393 - 75
50KZ51A	♦SAR	393 - 74
50KZ54	♦SAR	393 - 77
50KZ54A	♦SAR	393 - 76

TYPE No.	MFRS	Pg&Line
50KZ58	♦SAR	393 -184
50KZ58A	♦SAR	393 - 79
50KZ60	♦SAR	393 -186
50KZ60A	♦SAR	393 -183
50KZ64	♦SAR	394 - 90
50KZ64A	♦SAR	393 -187
50KZ70	♦SAR	394 -192
50KZ70A	♦SAR	394 -107
50KZ75	♦SAR	395 -102
50KZ75A	♦SAR	395 - 2
50KZ78	♦SAR	395 -103
50KZ78A	♦SAR	395 -101
50KZ85	♦SAR	396 - 14
50KZ85A	♦SAR	395 -105
50KZ90	♦SAR	396 -129
50KZ90A	♦SAR	396 - 34
50KZ100	♦SAR	397 - 19
50KZ100A	♦SAR	396 -131
50KZ110	♦SAR	397 -106
50KZ110A	♦SAR	397 - 20
50L15	EDL	411 - 39
50L20	EDL	415 - 25
50L25	EDL	417 -137
50L30	EDL	419 -115
50L35	EDL	420 -190
50L40	EDL	421 -200
50L45	EDL	422 -207
50L50	EDL	423 -152
50L55	EDL	424 -103
50L60	EDL	424 -200
50L65	EDL	425 - 49
50L70	EDL	425 - 90
50L75	EDL	425 -158
50L80	EDL	426 - 70
50L85	EDL	426 -147
50L90	EDL	426 -169
50L95	EDL	426 -208
50L100	EDL	427 -110
50L110	EDL	428 - 15
50L120	EDL	428 -105
50L130	EDL	428 -173
50L140	EDL	428 -215
50L150	EDL	429 - 81
50L160	EDL	429 -210
50L170	EDL	430 - 26
50L180	EDL	430 - 63
50L190	EDL	430 - 85
50L200	EDL	430 -165
50L210	EDL	431 - 11
50L220	EDL	431 - 29
50L230	EDL	431 - 44
50L240	EDL	431 - 62
50L250	EDL	431 -127
50L260	EDL	431 -190
50L270	EDL	431 -204
50L280	EDL	432 - 1
50L290	EDL	432 - 14
50L300	EDL	432 - 68
50LA	SAR	286 -143
50LF11	♦TOSJ	303 - 28
50LF	SAR	291 - 35
50M9.1SZ,5	MOTA	381 - 45
50M	SAR	277 - 32
50MV80	♦INR	426 - 68
50NF11	♦TOSJ	403 -208
50QF11	♦TOSJ	407 - 55
50S20	♦CODI	414 -190
50S30	♦CODI	419 - 67
50S40	♦CODI	421 -152
50S50	CODI	423 - 94
50SQ030	♦INR	374 - 93
50SQ035	♦INR	374 - 94
50SQ040	♦INR	374 - 95
50SQ045	♦INR	374 - 96
50SQ060	♦INR	374 - 97
50SQ080	♦INR	374 - 98
50SQ090	♦INR	374 - 99
50SQ0100	♦INR	374 -100
50T6.8,A,B	♦SAR	379 - 85
50T7.5,A,B	♦SAR	380 - 8
50T8.2,A,B	♦SAR	380 -123
50T9.1,A,B	♦SAR	381 - 46
50T10,A,B	♦SAR	381 -154
50T11,A,B	♦SAR	382 - 42
50T12,A,B	♦SAR	382 -165
50T13,A,B	♦SAR	383 - 72
50T15,A,B	♦SAR	384 - 51
50T16,A,B	♦SAR	384 -148
50T18,A,B	♦SAR	385 -113
50T20,A,B	♦SAR	386 - 60
50T22,A,B	♦SAR	386 -167
50T24,A,B	♦SAR	387 - 80
50T27,A,B	♦SAR	388 - 22
50T30,A,B	♦SAR	388 -138
50T33,A,B	♦SAR	389 - 47
50T36,A,B	♦SAR	389 -156
50T39,A,B	♦SAR	390 - 47
50T43,A,B	♦SAR	390 -153
50T47,A,B	♦SAR	391 - 89
50T51,A,B	♦SAR	392 - 19
50T62,A,B	♦SAR	393 - 59
50T68,A,B	♦SAR	393 -153
50T75,A,B	♦SAR	394 - 75
50T82,A,B	♦SAR	394 -178
50T91,A,B	♦SAR	395 - 87
50T100,A,B	♦SAR	395 -197
50T110,A,B	♦SAR	396 -114
50T120,A,B	♦SAR	397 - 4
50T130,A,B	♦SAR	397 - 90
50T150,A,B	♦SAR	398 - 33
50T160,A,B	♦SAR	398 -110
50T180,A,B	♦SAR	399 - 36
50T200,A,B	♦SAR	399 -131
50Z6.2,A,B	SAR	378 -183

TYPE No.	MFRS	Pg&Line
50Z6.8,A,B	SAR	379 - 86
50Z7.5,A,B	SAR	380 - 9
50Z8.2,A,B	SAR	380 -124
50Z9.1,A,B	SAR	381 - 47
50Z10,A,B	SAR	381 -155
50Z11,A,B	SAR	382 - 43
50Z12,A,B	SAR	382 -166
50Z13,A,B	SAR	383 - 73
50Z14,A,B	SAR	383 -143
50Z15,A,B	SAR	384 - 52
50Z16,A,B	SAR	384 -149
50Z17,A,B	SAR	385 - 6
50Z18,A,B	SAR	385 -114
50Z19,A,B	SAR	385 -162
50Z20,A,B	SAR	386 - 61
50Z22,A,B	SAR	386 -168
50Z24,A,B	SAR	387 - 81
50Z25,A,B	SAR	387 -123
50Z27,A,B	SAR	388 - 23
50Z30,A,B	SAR	388 -139
50Z33,A,B	SAR	389 - 48
50Z36,A,B	SAR	389 -157
50Z39,A,B	SAR	390 - 48
50Z43,A,B	SAR	390 -154
50Z45,A,B	SAR	391 - 7
50Z47,A,B	SAR	391 - 90
50Z50,A,B	SAR	391 -146
50Z51,A,B	SAR	392 - 20
50Z52,A,B	SAR	392 - 54
50Z56,A,B	SAR	392 -147
50Z62,A,B	SAR	393 - 60
50Z68,A,B	SAR	393 -154
50Z75,A,B	SAR	394 - 76
50Z82,A,B	SAR	394 -179
50Z91,A,B	SAR	395 - 88
50Z100,A,B	SAR	395 -198
50Z105,A,B	SAR	396 - 37
50Z110,A,B	SAR	396 -115
50Z120,A,B	SAR	397 - 5
50Z130,A,B	SAR	397 - 91
50Z140,A,B	SAR	397 -150
50Z150,A,B	SAR	398 - 34
50Z160,A,B	SAR	398 -111
50Z175,A,B	SAR	398 -155
50Z180,A,B	SAR	399 - 37
50Z200,A,B	SAR	399 -132
51HQ045	♦INR	375 - 55
	INRJ	
52HQ030	♦INR	303 - 55
52HQ035	♦INR	303 - 57
52HQ040	♦INR	303 - 61
52HQ045	♦INR	303 - 68
52HV100AV18L	INR	433 -202
55HQ015	INRJ	303 - 34
55HQ020	INRJ	303 - 35
55HQ025	INRJ	303 - 36
55HQ030	INRJ	303 - 37
60BC15	♦TOSJ	303 - 96
60CDQ020	♦INR	303 - 54
60CDQ030	♦INR	303 - 56
60CDQ035	♦INR	303 - 59
60CDQ040	♦INR	303 - 63
60CDQ045	♦INR	303 - 69
60DC15	TOSJ	303 -115
60FC15	TOSJ	303 -135
60FWJ2C11	TOSJ	263 - 33
60FWJ11	TOSJ	263 -118
60GC15	TOSJ	303 -161
60GWJ2C11	TOSJ	263 - 37
60GWJ11	TOSJ	263 -120
60H3	SAR	292 -123
60HF10	♦INR	303 - 93
60HF20	♦INR	303 -112
60HF30	♦INR	303 -130
60HF40	♦INR	303 -158
60HF50	♦INR	303 -172
60HF60	♦INR	303 -187
60HF80	♦INR	303 -208
60HF100	♦INR	403 -217
60HQ030	INRJ	375 -118
60HQ035	♦INRJ	375 -119
60HQ045	♦INRJ	375 -121
60HQ060	♦INR	303 - 79
60HQ080	♦INR	303 - 80
60HQ090	♦INR	303 - 81
60HQ100	♦INR	303 - 86
60J1	SAR	285 - 10
60J2P	SAR	294 -130
60J3P	SAR	295 -123
60JC15	TOSJ	303 -192
60JH3	SAR	304 -211
60KS200C	♦GSE	339 - 32
60L15	EDL	411 - 52
60L20	EDL	415 - 36
60L25	EDL	417 -139
60L30	EDL	419 -123
60L35	EDL	420 -193
60L40	EDL	421 -204
60L45	EDL	422 -210
60L50	EDL	423 -164
60L55	EDL	424 -104
60L60	EDL	424 -204
60L65	EDL	425 - 50
60L70	EDL	425 - 92
60L75	EDL	425 -167
60L80	EDL	426 - 74
60L85	EDL	426 -148
60L90	EDL	426 -170
60L95	EDL	426 -209
60L100	EDL	427 -128
60L110	EDL	428 - 16
60L120	EDL	428 -115
60L130	EDL	428 -174
60L140	EDL	428 -216

Δ-Registered with JEDEC by this manufacturer

♦-Mfr's data sheet available in microfilm service

1. TYPE No. CROSS INDEX

IN TYPE NUMBER SEQUENCE

TYPE No.	MFRS	Pg&Line
60L150	EDL	429 - 98
60L160	EDL	429 -212
60L170	EDL	430 - 27
60L180	EDL	430 - 64
60L190	EDL	430 - 86
60L200	EDL	430 -176
60L210	EDL	431 - 12
60L220	EDL	431 - 30
60L230	EDL	431 - 45
60L240	EDL	431 - 64
60L250	EDL	431 -140
60L260	EDL	431 -191
60L270	EDL	431 -205
60L280	EDL	432 - 2
60L290	EDL	432 - 15
60L300	EDL	432 - 72
60LA	SAR	285 - 11
60LC15	TOSJ	303 -211
60LF	SAR	291 - 53
60M	SAR	277 - 47
60NC15	TOSJ	403 -220
60QC15	♦TOSJ	407 - 73
60S1	INRJ	291 -165
60S2	INRJ	291 -215
60S3	INRJ	292 - 25
60S4	INRJ	292 - 62
60S05	INRJ	291 -123
60S5#B	♦INR	292 - 86
	INRJ	
60S6	INRJ	292 -122
60S8	INRJ	292 -173
60S10	INRJ	403 - 20
60SB03S	NECE	262 - 34
	NECJ	
60SB04S	NECE	262 - 39
	NECJ	
61F1FM	NECJ	303 - 87
61F2FM	NECJ	303 -106
61F3FM	NECJ	303 -124
61MQ30	INRJ	375 - 60
61MQ40	INRJ	375 - 65
61MQ50	INRJ	375 - 78
61MQ60	INRJ	375 - 81
61R1FM	NECJ	303 - 88
61R2FM	NECJ	303 -107
61R3FM	NECJ	303 -125
67C015H20LSS	♦INR	411 - 86
67C024H20LSS	♦INR	417 - 7
67C030H20LSS	♦INR	419 -144
67C050H20LSS	♦INR	423 -202
67C075H20LSS	♦INR	425 -190
67C100H20LSS	♦INR	427 -162
67C120H20LSS	♦INR	428 -138
67C150H20LSS	♦INR	429 -124
67C200H20LSS	♦INR	430 -185
67C250H20LSS	♦INR	431 -152
67C300H20LSS	♦INR	432 - 82
67C400H20LSS	♦INR	432 -190
67C500H20LSS	♦INR	433 - 66
67C750H20LSS	♦INR	433 -103
67D006H53PNN	INR	275 -187
67D010H53PNN	INR	401 - 62
67D015H53PNN	INR	411 - 18
67D015H55FNN	INR	411 - 19
67D018H55FNN	INR	413 -196
67D020H53PNN	INR	415 - 3
67D024H55FNN	INR	416 -213
67D030H53PNN	INR	419 - 92
67D036H55FNN	INR	421 - 7
67D048H55FNN	INR	423 - 24
67D050H04TNN	♦INR	423 -128
67D050H20TTS	♦INR	423 -144
67D050H53PNN	INR	423 -129
67D050H55FNN	INR	423 -130
67D075H04TNN	♦INR	425 - 80
67D075H20TTS	♦INR	425 -150
67D075H55FNN	INR	425 -147
67D080H53PNN	INR	426 - 49
67D100H04TNN	♦INR	427 - 84
67D100H20TTS	♦INR	427 - 97
67D100H53PNN	INR	427 - 85
67D100H55FNN	INR	427 - 86
67D120H04TNN	♦INR	428 - 90
67D120H20TTS	♦INR	428 - 98
67D120H53PNN	INR	428 - 91
67D120H55FNN	INR	428 - 92
67D150H04TNN	♦INR	429 - 68
67D150H20TTS	♦INR	429 - 76
67D150H53PNN	INR	429 - 69
67D150H55FNN	INR	429 - 70
67D200H04TNN	♦INR	430 -157
67D200H20TTS	♦INR	430 -161
67D200H53PNN	INR	430 -158
67D200H55FNN	INR	430 -159
67D250H20TTS	♦INR	431 -124
67D250H53PNN	INR	431 -121
67D250H55FNN	INR	431 -122
67D300H04TNN	♦INR	432 - 61
67D300H20TTS	♦INR	432 - 66
67D300H53PNN	INR	432 - 62
67D300H55FNN	INR	432 - 63
67D400H04TNN	♦INR	432 -176
67D400H20TTS	♦INR	432 -180
67D400H55FNN	INR	432 -177
67D500H20TTS	INR	433 - 57
67D500H55FNN	INR	433 - 54
67D600H20TTS	INR	433 - 85
67D750H20TTS	INR	433 - 96
70H10A	INRJ	305 - 68
70H20A	INRJ	305 - 80
70H30A	INRJ	305 - 87
70H40A	INRJ	305 - 97
70H50A	INRJ	305 -103
70H60A	INRJ	305 -112

TYPE No.	MFRS	Pg&Line
70H80A	INRJ	305 -123
70H100A	INRJ	404 - 33
70HF10	♦INR	304 - 43
70HF80	♦INR	304 -192
70HF120	INR	407 - 81
70HF140	INR	409 -184
70HF160	INR	412 -172
70HFL10S02	♦INR	258 - 42
	INRJ	
70HFL10S05	♦INR	258 - 70
	INRJ	
70HFL10S10	♦INR	258 -121
	INRJ	
70HFL20S02	♦INR	259 - 27
	INRJ	
70HFL20S05	♦INR	259 - 67
	INRJ	
70HFL20S10	♦INR	259 -120
	INRJ	
70HFL40S02	♦INR	260 - 4
	INRJ	
70HFL40S05	♦INR	260 - 30
	INRJ	
70HFL40S10	♦INR	260 - 79
	INRJ	
70HFL60S02	♦INR	260 -141
	INRJ	
70HFL60S05	♦INR	260 -158
	INRJ	
70HFL60S10	♦INR	260 -213
	INRJ	
70HFL80S05	♦INR	261 - 47
	INRJ	
70HFL80S10	♦INR	261 - 68
	INRJ	
70HFL100S05	♦INR	261 -111
	INRJ	
70HFL100S10	♦INR	261 -127
	INRJ	
70HFR10	♦INR	304 - 44
70HFR20	♦INR	304 - 75
70HFR30	♦INR	304 - 94
70HFR40	♦INR	304 -121
70HFR50	♦INR	304 -137
70HFR60	♦INR	304 -160
70HFR80	♦INR	304 -193
70HFR100	♦INR	404 - 20
70HFR120	♦INR	407 - 96
70HFR140	♦INR	409 -188
70HFR160	♦INR	412 -174
70M10	♦INRJ	309 - 98
70M20	♦INRJ	309 -118
70M30	♦INRJ	309 -139
70M40	♦INRJ	309 -157
70M50	♦INRJ	309 -178
70M60	♦INRJ	309 -191
70M80	♦INRJ	309 -215
70M100	♦INRJ	404 -204
70MA10	INRJ	309 - 95
70MA20	INRJ	309 -115
70MA30	INRJ	309 -136
70MA40	INRJ	309 -154
70MA60	INRJ	309 -190
70MA80	INRJ	309 -212
70MA100	INRJ	404 -143
70MA120	INRJ	408 - 15
70MA140	INRJ	410 - 61
70MA160	INRJ	413 - 32
70MLA60	INRJ	265 -114
70MLA80	INRJ	265 -116
70MLA100	INRJ	265 -118
70MLA120	INRJ	265 -120
70MLAB160	INRJ	264 - 84
70MLAB180	INRJ	264 - 87
70MLAB200	INRJ	264 - 92
70MLAB250	INRJ	264 - 98
70U10	♦INR	309 -109
70U20	♦INR	309 -128
70U40	♦INR	309 -169
70U60	♦INR	309 -202
70U80	♦INR	310 - 10
70U100	♦INR	404 -154
70U120	♦INR	408 - 31
75HQ030	♦INR	375 -100
	INRJ	
75HQ035	♦INR	304 -216
75HQ040	♦INR	375 -103
	INRJ	
75HQ045	♦INR	375 -105
	INRJ	
75R1B	EDL	278 - 5
75R2B	EDL	278 - 44
75R3B	EDL	278 - 91
75R4B	EDL	278 -125
75R5B	EDL	278 -166
75R6B	EDL	278 -196
75R7B	EDL	279 - 17
75R8B	EDL	279 - 31
75R9B	EDL	279 - 55
75R10B	EDL	401 -112
75R11B	EDL	405 - 64
75R12B	EDL	406 - 14
75R13B	EDL	408 -178
75R14B	EDL	409 - 65
75R15B	EDL	411 - 57
75R16B	EDL	412 - 32
75R18B	EDL	413 -208
75R20B	EDL	415 - 43
75R22B	EDL	416 - 72
75R24B	EDL	417 - 5
75R26B	EDL	418 - 55
75R28B	EDL	418 -164
75R30B	EDL	419 -127
75R32B	EDL	420 - 56

TYPE No.	MFRS	Pg&Line
75R34B	EDL	420 -133
75R36B	EDL	421 - 14
75R38B	EDL	421 - 76
75R40B	EDL	421 -209
75R42B	EDL	422 -104
75R44B	EDL	422 -147
75R46B	EDL	422 -219
75R48B	EDL	423 - 29
75R50B	EDL	423 -171
80H3	SAR	292 -174
80L15	EDL	411 - 62
80L20	EDL	415 - 44
80L25	EDL	417 -148
80L30	EDL	419 -130
80L35	EDL	420 -195
80L40	EDL	421 -211
80L45	EDL	422 -211
80L50	EDL	423 -175
80L55	EDL	424 -105
80L60	EDL	424 -209
80L65	EDL	425 - 51
80L70	EDL	425 - 95
80L75	EDL	425 -173
80L80	EDL	426 - 81
80L85	EDL	426 -149
80L90	EDL	426 -173
80L95	EDL	426 -210
80L100	EDL	427 -139
80L110	EDL	428 - 18
80L120	EDL	428 -122
80L130	EDL	428 -175
80L140	EDL	429 - 2
80L150	EDL	429 -108
80L160	EDL	429 -214
80L170	EDL	430 - 28
80L180	EDL	430 - 65
80L190	EDL	430 - 88
80L200	EDL	430 -181
80L210	EDL	431 - 13
80L220	EDL	431 - 31
80L230	EDL	431 - 46
80L240	EDL	431 - 65
80L250	EDL	431 -145
80L260	EDL	431 -192
80L270	EDL	431 -206
80L280	EDL	432 - 3
80L290	EDL	432 - 16
80L300	EDL	432 - 77
80SQ030	♦INR	374 -132
	INRJ	
80SQ035	INR	374 -133
80SQ040	♦INR	374 -135
	INRJ	
80SQ045	♦INR	374 -136
	INRJ	
80TF3.9,A	♦TRI	377 -129
80TF4.7,A	♦TRI	378 - 50
80TF5.6,A	♦TRI	378 -140
80TF6.8,A	♦TRI	379 -101
80TF8.2,A	♦TRI	380 -136
80TF10,A	♦TRI	381 -167
80TF12,A	♦TRI	382 -178
80TF15,A	♦TRI	384 - 64
80TF18,A	♦TRI	385 -126
80TF22,A	♦TRI	386 -180
80TF27,A	♦TRI	388 - 35
80TF33,A	♦TRI	389 - 60
80TF39,A	♦TRI	390 - 60
80TF47,A	♦TRI	391 -102
80TF56,A	♦TRI	392 -159
81F1FMA	NECJ	305 - 35
81F2FMA	NECJ	305 - 38
81F3FMA	NECJ	305 - 42
81R1FMA	NECJ	305 - 36
81R2FMA	NECJ	305 - 39
81R3FMA	NECJ	305 - 43
85HF10	♦INR	305 - 71
85HF20	♦INR	305 - 83
85HF40	♦INR	305 -100
85HF60	♦INR	305 -115
85HF80	♦INR	305 -126
85HF100	♦INR	404 - 36
85HF120	♦INR	407 -110
85HF140	♦INR	409 -200
85HF160	♦INR	412 -186
85HFL10S02	♦INR	305 - 64
85HFL10S05	♦INR	305 - 65
85HFL10S10	♦INR	305 - 66
85HFL20S02	♦INR	305 - 75
85HFL20S05	♦INR	305 - 76
85HFL20S10	♦INR	305 - 77
85HFL40S02	♦INR	305 - 93
85HFL40S05	♦INR	305 - 94
85HFL40S10	♦INR	305 - 95
85HFL60S02	♦INR	305 -108
85HFL60S05	♦INR	305 -109
85HFL60S10	♦INR	305 -110
85HFL80S02	♦INR	305 -120
85HFL80S05	♦INR	305 -121
85HFL80S10	♦INR	305 -122
85HFL100S05	♦INR	404 - 31
85HFL100S10	♦INR	404 - 32
85HFR10	♦INR	305 - 72
85HFR20	♦INR	305 - 84
85HFR30	♦INR	305 - 90
85HFR40	♦INR	305 -101
85HFR50	♦INR	305 -106
85HFR60	♦INR	305 -116
85HFR80	♦INR	305 -127
85HFR100	♦INR	404 - 37
85HFR120	♦INR	407 -111
85HFR140	♦INR	409 -201
85HFR160	♦INR	412 -187
85HQ030	INR	305 - 58

TYPE No.	MFRS	Pg&Line
85HQ035	INR	305 - 59
85HQ040	INR	305 - 60
85HQ045	INR	305 - 61
85P1	MISI	246 - 10
100EXD21	TOSJ	417 -197
100F20	♦CODI	241 -145
100H3	SAR	403 - 21
100JB1L	♦INR	367 -148
100JB2L	♦INR	367 -186
100JB4L	♦INR	368 - 6
100JB05L	♦INR	367 -117
100JB6L	♦INR	368 - 44
100JB8L	♦INR	368 - 73
100JB10L	♦INR	368 - 90
100JB12L	♦INR	368 - 94
100JH21	TOSJ	263 -192
100L15	EDL	411 - 69
100L20	EDL	415 - 47
100L25	EDL	417 -153
100L30	EDL	419 -137
100L35	EDL	420 -196
100L40	EDL	421 -216
100L45	EDL	422 -212
100L50	EDL	423 -184
100L55	EDL	424 -106
100L60	EDL	424 -213
100L65	EDL	425 - 52
100L70	EDL	425 - 98
100L75	EDL	425 -181
100L80	EDL	426 - 86
100L85	EDL	426 -150
100L90	EDL	426 -176
100L95	EDL	426 -211
100L100	EDL	427 -143
100L110	EDL	428 - 20
100L120	EDL	428 -125
100L130	EDL	428 -176
100L140	EDL	429 - 3
100L150	EDL	429 -113
100L160	EDL	429 -215
100L170	EDL	430 - 29
100L180	EDL	430 - 66
100L190	EDL	430 - 89
100L200	EDL	430 -182
100L210	EDL	431 - 14
100L220	EDL	431 - 32
100L230	EDL	431 - 47
100L240	EDL	431 - 66
100L250	EDL	431 -146
100L260	EDL	431 -193
100L270	EDL	431 -207
100L280	EDL	432 - 4
100L290	EDL	432 - 17
100L300	EDL	432 - 78
100MAB180	INRJ	414 - 19
100MAB200	INRJ	415 -129
100MAB250	INRJ	417 -196
100MLAB160	INRJ	264 - 85
100MLAB180	INRJ	264 - 88
100MLAB200	INRJ	264 - 93
100QD21	TOSJ	407 -157
100QH21	TOSJ	263 -203
100R1B	EDL	280 - 49
100R2B	EDL	280 -137
100R3B	EDL	281 - 8
100R4B	EDL	281 - 44
100R5B	EDL	281 -133
100R6B	EDL	281 -161
100R7B	EDL	282 - 16
100R8B	EDL	282 - 35
100R9B	EDL	282 -101
100R10B	EDL	401 -158
100R11B	EDL	405 - 65
100R12B	EDL	406 - 41
100R13B	EDL	408 -179
100R14B	EDL	409 - 70
100R15B	EDL	411 - 70
100R16B	EDL	412 - 42
100R18B	EDL	413 -212
100R20B	EDL	415 - 48
100R22B	EDL	416 - 73
100R24B	EDL	417 - 6
100R26B	EDL	418 - 56
100R28B	EDL	418 -165
100R30B	EDL	419 -138
100R32B	EDL	420 - 57
100R34B	EDL	420 -134
100R36B	EDL	421 - 15
100R38B	EDL	421 - 77
100R40B	EDL	421 -217
100R42B	EDL	422 -105
100R44B	EDL	422 -148
100R46B	EDL	422 -220
100R48B	EDL	423 - 30
100R50B	EDL	423 -185
100S20	♦CODI	241 -146
100S30	♦CODI	241 -167
100S40	♦CODI	241 -184
100S50	♦CODI	241 -199
100YD21	TOSJ	415 -131
101F1FM	NECJ	305 -194
101F2FM	NECJ	305 -220
101F3FM	NECJ	306 - 17
101F4S	♦NECJ	306 - 60
101F5S	♦NECJ	306 - 79
101F6S	♦NECJ	306 -110
101F8S	♦NECJ	306 -163
101F10S	♦NECJ	404 - 69
101F12S	♦NECJ	407 -154
101KL40S10	♦INR	306 - 32
101KL40S15	INRJ	265 - 38
101KL40S20	INRJ	265 - 39
101KL60S10	♦INR	306 - 89
101KL60S15	INRJ	265 - 40

TYPE No.	MFRS	Pg&Line
101KL60S20	INRJ	265 - 41
101KL80S10	♦INR	306 -134
101KL80S15	INR	265 - 42
	INRJ	
101KL80S20	INRJ	265 - 43
101KL80S25	♦INR	433 -212
101KL100S10	♦INR	404 - 47
101KL100S15	INRJ	265 - 44
101KL100S20	INRJ	265 - 45
101KL100S25	♦INR	404 - 62
101KL100S30	INRJ	265 - 46
101KL120S10	♦INR	407 -129
101KL120S15	♦INR	407 -155
101KL120S20	INRJ	265 - 47
101KL120S25	♦INR	407 -142
101KL120S30	INR	265 - 48
	INRJ	
101KL130S10	♦INR	408 -215
101KL130S15	♦INR	409 - 2
101KL130S25	♦INR	408 -219
101KL130S30	INR	265 - 49
	INRJ	
101KL140S10	♦INR	409 -214
101KL140S15	♦INR	410 - 8
101KL140S20	♦INR	410 - 9
101KL140S25	♦INR	409 -216
101KL140S30	INR	265 - 50
	INRJ	
101KL150S10	♦INR	411 -149
101KL150S15	♦INR	411 -150
101KL150S20	♦INR	411 -151
101KL150S25	♦INR	411 -152
101KL150S30	INRJ	265 - 51
101KL160S10	♦INR	412 -207
101KL160S15	♦INR	412 -208
101KL160S20	♦INR	412 -209
101KL160S25	♦INR	412 -210
101KL160S30	INR	265 - 52
	INRJ	
101KLR40S10	♦INR	306 - 33
101KLR40S15	♦INR	306 - 61
101KLR40S20	♦INR	306 - 62
101KLR40S25	♦INR	306 - 63
101KLR40S30	♦INR	306 - 64
101KLR60S10	♦INR	306 - 90
101KLR60S15	♦INR	306 -113
101KLR60S20	♦INR	306 -114
101KLR60S25	♦INR	306 -115
101KLR60S30	♦INR	306 -116
101KLR80S10	♦INR	306 -135
101KLR80S15	♦INR	306 -166
101KLR80S20	♦INR	306 -167
101KLR80S25	♦INR	306 -168
101KLR80S30	♦INR	306 -169
101KLR100S10	♦INR	404 - 48
101KLR100S15	♦INR	404 - 71
101KLR100S20	♦INR	404 - 72
101KLR100S25	♦INR	404 - 73
101KLR100S30	♦INR	404 - 74
101KLR120S10	♦INR	407 -130
101KLR120S15	♦INR	407 -158
101KLR120S20	♦INR	407 -159
101KLR120S25	♦INR	407 -160
101KLR120S30	♦INR	407 -161
101KLR130S10	♦INR	408 -216
101KLR130S15	♦INR	409 - 3
101KLR130S20	♦INR	409 - 4
101KLR130S25	♦INR	409 - 5
101KLR130S30	♦INR	409 - 6
101KLR140S10	♦INR	409 -215
101KLR140S15	♦INR	410 - 11
101KLR140S20	♦INR	410 - 12
101KLR140S25	♦INR	410 - 13
101KLR140S30	♦INR	410 - 14
101KLR150S10	♦INR	411 -146
101KLR150S15	♦INR	411 -153
101KLR150S20	♦INR	411 -154
101KLR150S25	♦INR	411 -155
101KLR150S30	♦INR	411 -156
101KLR160S10	♦INR	412 -198
101KLR160S15	♦INR	412 -212
101KLR160S20	♦INR	412 -213
101KLR160S25	♦INR	412 -214
101KLR160S30	♦INR	412 -215
103PJLA160	INRJ	264 - 86
103PJLA180	INRJ	264 - 89
103PJLA200	INRJ	264 - 94
103PJLA250	INRJ	264 - 99
120MLA60	INRJ	268 -150
120MLA80	INRJ	268 -154
120MLA100	INRJ	268 -158
120MLA120	INRJ	268 -163
121	DII	253 - 79
121A	DII	253 - 80
122	DII	254 - 75
122A	DII	254 - 76
124	DII	254 -207
124A	DII	254 -208
126	DII	255 - 94
126A	DII	255 - 95
150BC15	♦TOSJ	307 - 62
150DC15	♦TOSJ	307 - 92
150FC15	♦TOSJ	307 -127
150GC15	♦TOSJ	307 -157
150JC15	TOSJ	307 -204
150K5A	INR	307 - 45
150K10A	♦INR	307 - 69
150K20A	♦INR	307 -107
150K60A	♦INR	307 -219
150K80A	♦INR	308 - 43
150K100A	♦INR	404 -106
150K120A	♦INR	407 -198
150KS5	INR	307 - 46
150KS10	INR	307 - 70

Δ-Registered with JEDEC by this manufacturer

♦-Mfr's data sheet available in microfilm service

1. TYPE No. CROSS INDEX

IN TYPE NUMBER SEQUENCE

TYPE No.	MFRS	Pg&Line
150KS20	INR	307 -108
150KS30	INR	307 -134
150KS40	INR	307 -173
150KS60	INR	307 -220
150KS80	INR	308 - 44
150KS100	INR	404 -107
150KS120	INR	407 -199
150L5A	INR	307 - 47
150L10A	♦INR	307 - 71
150L30A	♦INR	307 -135
150L60A	♦INR	308 - 1
150L100A	♦INR	404 -108
150L120A	♦INR	407 -200
150LC15	TOSJ	308 - 28
150LD13	TOSJ	308 - 25
150MLAB160	INRJ	266 - 39
150MLAB180	INRJ	266 - 41
150MLAB200	INRJ	266 - 43
150MLAB250	INRJ	266 - 45
150NC15	TOSJ	404 - 94
150ND13	TOSJ	404 - 91
150QC15	TOSJ	407 -185
150QD13	TOSJ	407 -183
150R1B	EDL	283 -121
150R2B	EDL	283 -184
150R3B	EDL	284 - 32
150R4B	EDL	284 - 72
150R5B	EDL	284 -137
150R6B	EDL	284 -174
150R7B	EDL	285 - 16
150R8B	EDL	285 - 37
150R9B	EDL	285 - 84
150R10B	EDL	402 - 38
150R11B	EDL	405 - 70
150R12B	EDL	406 - 85
150R13B	EDL	408 -192
150R14B	EDL	409 - 79
150R15B	EDL	411 - 91
150R16B	EDL	412 - 59
150R18B	EDL	413 -217
150R20B	EDL	415 - 58
150R22B	EDL	416 - 74
150R24B	EDL	417 - 9
150R26B	EDL	418 - 57
150R28B	EDL	418 -166
150R30B	EDL	419 -145
150R32B	EDL	420 - 59
150R34B	EDL	420 -135
150R36B	EDL	421 - 16
150R38B	EDL	421 - 78
150R40B	EDL	422 - 4
150R42B	EDL	422 -106
150R44B	EDL	422 -149
150R46B	EDL	423 - 1
150R48B	EDL	423 - 32
150R50B	EDL	423 -206
150TD13	TOSJ	411 -163
150YD13	TOSJ	415 -136
151	DII	253 - 93
151A	DII	253 - 94
151MQ30	INRJ	375 -123
151MQ40	INRJ	375 -124
152	DII	254 - 87
152A	DII	254 - 88
152K5A	INR	307 - 48
152K10A	INR	307 - 72
152K20A	INR	307 -109
152K30A	INR	307 -136
152K40A	INR	307 -174
152K60A	INR	308 - 2
152K80A	INR	308 - 45
152K100A	INR	404 -109
152L5A	INR	307 - 49
152L10A	INR	307 - 73
152L15A	INR	307 - 80
152L20A	INR	307 -110
152L25A	INR	307 -118
152L30A	INR	307 -137
152L40A	INR	307 -175
152L50A	INR	307 -193
152L60A	INR	308 - 3
152L70A	INR	308 - 17
152L80A	INR	308 - 46
152L90A	INR	308 - 55
152L100A	INR	404 -110
152L120A	INR	407 -201
153PJA180	INRJ	414 - 26
153PJA200	INRJ	415 -135
153PJA250	INRJ	417 -200
153PJLA60	INRJ	264 - 44
153PJLA80	INRJ	264 - 46
153PJLA100	INRJ	264 - 48
153PJLA120	INRJ	264 - 50
154	DII	255 - 3
154A	DII	255 - 4
154K5A	INR	307 - 50
154K10A	INR	307 - 74
154K20A	INR	307 -111
154K30A	INR	307 -138
154K40A	INR	307 -176
154K60A	INR	308 - 4
154K80A	INR	308 - 47
154K100A	INR	404 -111
154K120A	INR	407 -202
154L5A	INR	307 - 51
154L10A	INR	307 - 75
154L20A	INR	307 -112
154L30A	INR	307 -139
154L40A	INR	307 -177
154L60A	INR	308 - 5
154L80A	INR	308 - 48
154L90A	INR	308 - 56
154L100A	INR	404 -112
154L120A	INR	407 -203

TYPE No.	MFRS	Pg&Line
156	DII	255 -123
156A	DII	255 -124
200CNQ020	♦INR	375 -196
200CNQ030	♦INR	375 -197
200CNQ035	♦INR	375 -198
200CNQ040	♦INR	375 -199
200CNQ045	♦INR	375 -201
200EXD21	TOSJ	417 -204
200JH21	TOSJ	263 -193
200MAB180	INRJ	414 - 27
200MAB200	INRJ	415 -137
200MAB250	INRJ	417 -203
200QD21	TOSJ	408 - 3
200QH21	TOSJ	264 - 29
200R1B	EDL	286 - 9
200R2B	EDL	286 - 47
200R3B	EDL	286 - 83
200R4B	EDL	286 - 98
200R5B	EDL	286 -131
200R6B	EDL	286 -147
200R7B	EDL	286 -177
200R8B	EDL	286 -187
200R9B	EDL	286 -211
200R10B	EDL	402 - 96
200R11B	EDL	405 - 72
200R12B	EDL	406 -101
200R13B	EDL	408 -195
200R14B	EDL	409 - 84
200R15B	EDL	411 - 95
200R16B	EDL	412 - 68
200R18B	EDL	413 -218
200R20B	EDL	415 - 66
200R22B	EDL	416 - 75
200R24B	EDL	417 - 10
200R26B	EDL	418 - 58
200R28B	EDL	418 -167
200R30B	EDL	419 -149
200R32B	EDL	420 - 60
200R34B	EDL	420 -136
200R36B	EDL	421 - 17
200R38B	EDL	421 - 79
200R40B	EDL	422 - 10
200R42B	EDL	422 -107
200R44B	EDL	422 -150
200R46B	EDL	423 - 2
200R48B	EDL	423 - 33
200R50B	EDL	423 -215
200RS45	♦CODI	422 -195
200RS50	♦CODI	423 -122
200S40	CODI	421 -171
200S45	CODI	422 -193
200S50	CODI	423 -119
200YD21	TOSJ	415 -139
201CNQ020	♦INR	375 -217
201CNQ030	♦INR	375 -219
201CNQ035	♦INR	376 - 1
201CNQ040	♦INR	376 - 5
201CNQ045	♦INR	376 - 9
203PJLA160	INRJ	266 - 40
203PJLA180	INRJ	266 - 42
203PJLA200	INRJ	266 - 44
203PJLA250	INRJ	266 - 46
250BC15	♦TOSJ	309 - 99
250DC15	♦TOSJ	309 -119
250FC15	♦TOSJ	309 -140
250GC15	♦TOSJ	309 -158
250JB1L	♦INR	369 -210
250JB2L	♦INR	370 - 21
250JB4L	♦INR	370 - 58
250JB05L	♦INR	369 -187
250JB6L	♦INR	370 - 93
250JB8L	♦INR	370 -115
250JB10L	♦INR	370 -132
250JB12L	♦INR	370 -140
250JC15	♦TOSJ	309 -192
250LC15	♦TOSJ	309 -216
250MA60	INRJ	311 -206
250MA80	INRJ	311 -209
250MA100	INRJ	404 -219
250MA120	INRJ	408 -104
250MA140	INRJ	410 -138
250MA160	INRJ	413 - 82
250MA180	INRJ	414 - 85
250MLAB160	INRJ	268 - 45
250MLAB180	INRJ	268 - 52
250MLAB200	INRJ	268 - 59
250MLAB250	INRJ	268 - 75
250NC15	♦TOSJ	404 -144
250R1B	EDL	287 - 8
250R2B	EDL	287 - 28
250R3B	EDL	287 - 48
250R4B	EDL	287 - 56
250R5B	EDL	287 - 75
250R6B	EDL	287 - 85
250R7B	EDL	287 -102
250R8B	EDL	287 -111
250R9B	EDL	287 -130
250R10B	EDL	402 -128
250R11B	EDL	405 - 74
250R12B	EDL	406 -107
250R13B	EDL	408 -197
250R14B	EDL	409 - 85
250R15B	EDL	411 -100
250R16B	EDL	412 - 71
250R18B	EDL	413 -219
250R20B	EDL	415 - 72
250R22B	EDL	416 - 76
250R24B	EDL	417 - 11
250R26B	EDL	418 - 59
250R28B	EDL	418 -168
250R30B	EDL	419 -156
250R32B	EDL	420 - 62
250R34B	EDL	420 -137
250R36B	EDL	421 - 18

TYPE No.	MFRS	Pg&Line
250R38B	EDL	421 - 80
250R40B	EDL	422 - 19
250R42B	EDL	422 -108
250R44B	EDL	422 -151
250R46B	EDL	423 - 3
250R48B	EDL	423 - 35
250R50B	EDL	424 - 10
250RS35	♦CODI	420 -186
250RS40	♦CODI	421 -187
250S30	CODI	419 - 98
250S35	CODI	420 -185
250S40	CODI	421 -184
251F5S	NECJ	309 -175
251F6S	NECJ	309 -188
251F8S	NECJ	309 -209
251F10S	NECJ	404 -140
251F12S	NECJ	408 - 13
251UL20S10	♦INR	266 - 65
251UL20S15	♦INR	266 - 66
251UL40S10	♦INR	266 - 94
251UL40S15	♦INR	266 - 97
	INRJ	
251UL40S20	INRJ	266 -101
251UL60S10	♦INR	266 -127
251UL60S15	♦INR	266 -130
	INRJ	
251UL60S20	♦INR	266 -135
	INRJ	
251UL80S10	♦INR	266 -166
251UL80S15	♦INR	266 -169
	INRJ	
251UL80S20	♦INR	267 - 4
	INRJ	
251UL100S10	♦INR	267 - 34
251UL100S15	INR	267 - 37
	INRJ	
251UL100S20	♦INR	267 - 42
	INRJ	
251UL100S25	♦INR	267 - 48
251UL100S30	INRJ	267 - 49
251UL120S20	♦INR	267 - 76
	INRJ	
251UL120S25	♦INR	267 - 83
251UL120S30	INRJ	267 - 84
251UL130S30	INRJ	267 - 96
251UL140S20	♦INR	267 - 99
251UL140S25	♦INR	267 -106
251UL140S30	INR	267 -107
	INRJ	
251UL150S30	INRJ	267 -115
251UL160S25	♦INR	267 -121
251UL160S30	♦INR	267 -122
	INRJ	
251UL180S25	♦INR	267 -129
251UL180S30	♦INR	414 - 38
253PJA60	INRJ	309 -189
253PJA80	INRJ	309 -211
253PJA100	INRJ	404 -142
253PJA120	INRJ	408 - 14
253PJA140	INRJ	410 - 60
253PJA160	INRJ	413 - 31
253PJLA60	INRJ	265 -115
253PJLA80	INRJ	265 -117
253PJLA100	INRJ	265 -119
253PJLA120	INRJ	265 -121
300EXD13	TOSJ	417 -208
300EXH21	TOSJ	264 - 95
300FXD13	TOSJ	419 -194
300JH21	TOSJ	263 -194
300LD13	TOSJ	310 -153
300ND13	TOSJ	404 -172
300QD13	TOSJ	408 - 52
300QH21	TOSJ	264 - 78
300R1B	EDL	288 - 2
300R2B	EDL	288 - 74
300R3B	EDL	288 -143
300R4B	EDL	288 -175
300R5B	EDL	289 - 15
300R6B	EDL	289 - 40
300R7B	EDL	289 - 97
300R8B	EDL	289 -115
300R9B	EDL	289 -166
300R10B	EDL	402 -154
300R11B	EDL	405 - 75
300R12B	EDL	406 -120
300R13B	EDL	408 -199
300R14B	EDL	409 - 91
300R15B	EDL	411 -102
300R16B	EDL	412 - 75
300R18B	EDL	413 -220
300R20B	EDL	415 - 74
300R22B	EDL	416 - 77
300R24B	EDL	417 - 13
300R26B	EDL	418 - 60
300R28B	EDL	418 -169
300R30B	EDL	419 -157
300R32B	EDL	420 - 63
300R34B	EDL	420 -138
300R36B	EDL	421 - 19
300R38B	EDL	421 - 81
300R40B	EDL	422 - 20
300R42B	EDL	422 -109
300R44B	EDL	422 -152
300R46B	EDL	423 - 4
300R48B	EDL	423 - 36
300R50B	EDL	424 - 15
300TD13	TOSJ	411 -186
300U5A	♦INR	310 - 44
300U10A	♦INR	310 - 48
	INRJ	
300U15A	INRJ	310 - 53
300U20A	♦INR	310 - 58
	INRJ	
300U25A	INRJ	310 - 63

TYPE No.	MFRS	Pg&Line
300U30A	♦INR	310 - 68
	INRJ	
300U40A	♦INR	310 - 76
	INRJ	
300U50A	INR	310 - 85
	INRJ	
300U60A	♦INR	310 - 91
	INRJ	
300U70A	INRJ	310 - 99
300U80A	♦INR	310 -108
	INRJ	
300U90A	INRJ	310 -118
300U100A	♦INR	404 -161
	INRJ	
300U120A	♦INR	408 - 37
	INRJ	
300WD13	TOSJ	414 - 53
300YD13	TOSJ	415 -153
301U80	♦INR	310 -109
	INRJ	
301U100	♦INR	404 -162
	INRJ	
301U120	♦INR	408 - 38
	INRJ	
301U140	♦INR	410 - 78
	INRJ	
301U160	♦INR	413 - 38
	INRJ	
301U180	♦INR	414 - 46
	INRJ	
301U200	♦INR	415 -147
	INRJ	
301U210	♦INR	416 - 28
	INRJ	
301U220	♦INR	416 - 91
	INRJ	
301U230	♦INR	416 -162
	INRJ	
301U240	♦INR	417 - 26
	INRJ	
301U250	♦INR	417 -209
	INRJ	
302U5A	INR	310 - 45
302U10A	INR	310 - 49
	INRJ	
302U15A	INRJ	310 - 54
302U20A	INR	310 - 59
	INRJ	
302U25A	INRJ	310 - 64
302U30A	INR	310 - 69
	INRJ	
302U40A	INR	310 - 77
	INRJ	
302U50A	INRJ	310 - 86
302U60A	INR	310 - 92
	INRJ	
302U70A	INRJ	310 -100
302U80A	INR	310 -110
	INRJ	
302U90A	INRJ	310 -119
302U100A	INR	404 -163
	INRJ	
302U120A	INR	408 - 39
	INRJ	
303PJA180	INRJ	414 - 44
303PJA200	INRJ	415 -144
303PJA250	INRJ	417 -207
303U80	♦INR	310 -111
303U100	♦INR	404 -164
303U120	♦INR	408 - 40
303U140	♦INR	410 - 79
303U160	♦INR	413 - 39
303U180	♦INR	414 - 47
303U200	♦INR	415 -148
303U210	♦INR	416 - 29
303U220	♦INR	416 - 92
303U230	♦INR	416 -163
303U240	♦INR	417 - 27
303U250	♦INR	417 -210
305U120	♦INR	408 - 46
305U220	♦INR	416 - 94
309U80	♦INR	310 -112
309U100	♦INR	404 -165
309U120	♦INR	408 - 41
309U140	♦INR	410 - 80
309U160	♦INR	413 - 40
309U180	♦INR	414 - 48
309U200	♦INR	415 -149
309U210	♦INR	416 - 30
309U220	♦INR	416 - 93
309U230	♦INR	416 -164
309U240	♦INR	417 - 28
309U250	♦INR	417 -211
321	DII	253 - 81
321A	DII	253 - 82
322	DII	254 - 77
322A	DII	254 - 78
324	DII	254 -209
324A	DII	254 -210
326	DII	255 - 96
326A	DII	255 - 97
350R1B	EDL	289 -178
350R2B	EDL	289 -184
350R3B	EDL	289 -190
350R4B	EDL	289 -193
350R5B	EDL	289 -197
350R6B	EDL	289 -199
350R7B	EDL	289 -203
350R8B	EDL	289 -204
350R9B	EDL	289 -206
350R10B	EDL	402 -196
350R11B	EDL	405 - 79
350R12B	EDL	406 -127
350R13B	EDL	408 -204

TYPE No.	MFRS	Pg&Line
350R14B	EDL	409 - 92
350R15B	EDL	411 -107
350R16B	EDL	412 - 80
350R18B	EDL	414 - 2
350R20B	EDL	415 - 81
350R22B	EDL	416 - 78
350R24B	EDL	417 - 15
350R26B	EDL	418 - 61
350R28B	EDL	418 -170
350R30B	EDL	419 -163
350R32B	EDL	420 - 64
350R34B	EDL	420 -139
350R36B	EDL	421 - 21
350R38B	EDL	421 - 82
350R40B	EDL	422 - 25
350R42B	EDL	422 -110
350R44B	EDL	422 -153
350R46B	EDL	423 - 5
350R48B	EDL	423 - 37
350R50B	EDL	424 - 21
350RS25	♦CODI	417 -132
350RS30	♦CODI	419 -107
350S20	CODI	415 - 17
350S25	CODI	417 -130
350S30	CODI	419 -106
351	DII	253 - 95
351A	DII	253 - 96
352	DII	254 - 89
352A	DII	254 - 90
353PJLA160	INRJ	268 - 46
353PJLA180	INRJ	268 - 53
353PJLA200	INRJ	268 - 60
353PJLA250	INRJ	268 - 76
354	DII	255 - 5
354A	DII	255 - 6
356	DII	255 -125
356A	DII	255 -126
359V	MEHK	285 - 85
363A	♦PRX	257 -160
363B	♦PRX	258 - 80
363D	♦PRX	259 - 76
363F	♦PRX	259 -190
363H	♦PRX	260 - 43
363M	♦PRX	260 -169
363S	♦PRX	240 - 77
363Z	♦PRX	240 -122
368V	♦PRX	296 -175
368Z	♦PRX	403 - 94
384P	MEHK	285 - 27
384V	MEHK	285 - 86
388A	♦PRX	257 -157
388B	♦PRX	258 - 69
388D	♦PRX	259 - 65
388F	♦PRX	259 -188
388H	♦PRX	260 - 28
388M	♦PRX	260 -157
388S	♦PRX	240 - 78
388Z	♦PRX	240 -123
398P	MEHK	289 -103
398V	MEHK	289 -170
400EXD21	TOSJ	417 -215
400MAB180	INRJ	414 - 57
400MAB200	INRJ	415 -157
400MAB250	INRJ	417 -213
400QD21	TOSJ	408 - 61
400R1B	EDL	290 - 26
400R2B	EDL	290 - 38
400R3B	EDL	290 - 46
400R4B	EDL	290 - 52
400R5B	EDL	290 - 61
400R6B	EDL	290 - 65
400R7B	EDL	290 - 73
400R8B	EDL	290 - 75
400R9B	EDL	290 - 78
400R10B	EDL	402 -198
400R11B	EDL	405 - 80
400R12B	EDL	406 -129
400R13B	EDL	408 -206
400R14B	EDL	409 - 93
400R15B	EDL	411 -108
400R16B	EDL	412 - 83
400R18B	EDL	414 - 3
400R20B	EDL	415 - 87
400R22B	EDL	416 - 79
400R24B	EDL	417 - 16
400R26B	EDL	418 - 62
400R28B	EDL	418 -171
400R30B	EDL	419 -166
400R32B	EDL	420 - 65
400R34B	EDL	420 -140
400R36B	EDL	421 - 22
400R38B	EDL	421 - 83
400R40B	EDL	422 - 27
400R42B	EDL	422 -111
400R44B	EDL	422 -154
400R46B	EDL	423 - 6
400R48B	EDL	423 - 38
400R50B	EDL	424 - 24
400YD21	TOSJ	415 -160
401PDA20L15	♦INR	268 -146
401PDA40L15	♦INR	268 -147
401PDA60L15	♦INR	268 -148
401PDA60L20	♦INR	268 -149
	INRI	
401PDA80L15	♦INR	268 -152
401PDA80L20	♦INR	268 -153
401PDA100L20	♦INR	268 -156
401PDA100L25	♦INR	268 -157
401PDA100L30	♦INR	268 -174
401PDA120L20	♦INR	268 -161
401PDA120L25	♦INR	268 -162
401PDA120L30	♦INR	268 -175
401PDA140L20	♦INR	268 -166
401PDA140L25	♦INR	268 -167

Δ-Registered with JEDEC by this manufacturer

♦-Mfr's data sheet available in microfilm service

1. TYPE No. CROSS INDEX

IN TYPE NUMBER SEQUENCE

TYPE No.	MFRS	Pg&Line
401PDA140L30	♦INR	268 -176
401PDA160L25	♦INR	268 -169
401PDA160L30	♦INR	268 -177
401PDA180L25	♦INR	268 -171
401PDA180L30	♦INR	268 -172
403PJA60	INRJ	311 - 18
403PJA80	INRJ	311 - 40
403PJA100	INRJ	404 -178
403PJA120	INRJ	408 - 57
403PJA140	INRJ	410 - 91
403PJA160	INRJ	413 - 53
423AB1AB1	♦CSD	361 -162
423AB1AF1	♦CSD	364 -109
423AB1AI1	CSD	362 -202
423AC1AI1	CSD	362 -203
423AF1AH1	CSD	289 -210
423BB1AB1	♦CSD	361 -195
423BB1AF1	♦CSD	364 -119
423BB1AI1	CSD	363 - 34
423BC1AI1	CSD	363 - 35
423BF1AH1	CSD	289 -213
423DB1AB1	♦CSD	362 - 31
423DB1AF1	♦CSD	364 -136
423DB1AI1	CSD	363 - 82
423DC1AI1	CSD	363 - 83
423DF1AH1	CSD	289 -218
423EB2AF1	CSD	364 -181
423EF2AH1	CSD	402 -109
423EF3AH1	CSD	415 - 68
423FB1AB1	♦CSD	361 -136
423FB1AF1	♦CSD	364 - 95
423FB1AI1	CSD	362 -167
423FC1AI1	CSD	362 -168
423FF1AH1	CSD	289 -207
423MB1AB1	♦CSD	362 - 65
423MB1AF1	♦CSD	364 -151
423MB1AI1	CSD	363 -129
423MB2AI1	CSD	401 -173
423MB6AH1	CSD	417 -154
423MC1AI1	CSD	363 -130
423MC2AI1	CSD	401 -174
423MC5AE1	CSD	417 -162
423MC6AH1	CSD	417 -166
423MC11AH1	CSD	423 -186
423MD5AE1	CSD	417 -142
423MD6AH1	CSD	417 -141
423MD11AH1	CSD	423 -138
423MF1AH1	CSD	290 - 1
423MH5AE1	CSD	417 -143
423MH6AH1	CSD	417 -167
423MH10AE1	CSD	423 -169
423MH11AH1	CSD	423 -187
423NB1AB1	♦CSD	362 - 92
423NB1AF1	♦CSD	364 -166
423NB1AI1	CSD	363 -167
423NB2AF1	CSD	364 -187
423NB2AI1	CSD	411 - 73
423NC1AI1	CSD	363 -168
423NC2AI1	CSD	411 - 74
423NC7AE1	CSD	423 -198
423NC17AH1	CSD	427 -115
423ND17AH1	CSD	427 - 75
423NF1AH1	CSD	290 - 4
423NF2AH1	CSD	411 - 99
423NH10AE1	CSD	425 -168
423NH16AE1	CSD	428 -117
423NH26AH1	CSD	429 - 59
423PB1AB1	♦CSD	362 -112
423PB10AH1	♦CSD	425 -159
423PC8AE1	CSD	425 -186
423PC10AE1	CSD	427 -157
423PC13AE1	CSD	428 -135
423PC15AE1	CSD	429 -121
423PD8AE1	CSD	425 -169
423PD10AE1	CSD	427 -131
423PD13AE1	CSD	428 -118
423PD15AE1	CSD	429 -101
423PH5AS1	♦CSD	423 -156
423PH8AS1	♦CSD	425 -160
423PH10AE1	CSD	427 -132
423PH10AS1	♦CSD	427 -117
423PH13AS1	♦CSD	428 -107
423PH15AE1	CSD	429 -102
423PH15AS1	♦CSD	429 - 87
423PH20AS1	♦CSD	430 -169
423PH25AS1	♦CSD	431 -132
423SC14AH1	CSD	425 -170
423SD14AH1	CSD	425 -148
423SH14AH1	CSD	425 -171
423SH19AH1	CSD	427 -102
423SH24AH1	CSD	428 - 93
423TB8AH1	CSD	423 -172
424AB1AB1	CSD	272 -148
424AB1AF1	CSD	272 -149
424AF1AH1	CSD	238 -185
424BB1AB1	CSD	272 -152
424BB1AF1	CSD	272 -153
424BF1AH1	CSD	239 - 59
424DB1AB1	CSD	272 -156
424DB1AF1	CSD	272 -157
424DF1AH1	CSD	239 -165
424DF2AH1	CSD	240 - 68
424EF2AH1	CSD	240 -112
424EF3AH1	CSD	240 -169
424FB1AB1	CSD	272 -144
424FB1AF1	CSD	272 -145
424FF1AH1	CSD	238 -111
424MB1AB1	CSD	272 -160
424MB1AF1	CSD	272 -161
424MC5AE1	CSD	417 -151
424MC10AE1	CSD	423 -182
424MC13AE1	CSD	425 -178
424MD5AE1	CSD	417 -134
424MD10AE1	CSD	423 -148

TYPE No.	MFRS	Pg&Line
424MD13AE1	CSD	425 -156
424MF1AH1	CSD	240 - 4
424MH5AE1	CSD	417 -135
424MH5AS1	♦CSD	417 -131
424MH9AS1	♦CSD	423 -145
424MH10AE1	CSD	423 -149
424MH13AE1	CSD	425 -157
424MH13AS1	♦CSD	425 -151
424MH17AE1	CSD	427 -108
424MH17AS1	♦CSD	427 -100
424MH21AE1	CSD	428 -103
424MH21AS1	♦CSD	428 -101
424MH25AE1	CSD	429 - 78
425NH9AB1	CSD	423 -154
425NH10AB1	CSD	424 -192
425NH14AB1	CSD	426 - 38
425NH17AB1	CSD	427 - 67
425SH2AB1	CSD	401 -182
425SH3AB1	CSD	411 - 65
425SH4AB1	CSD	415 - 39
425SH6AB1	CSD	419 -118
425SH8AB1	CSD	421 -202
425SH23AB1	CSD	428 - 74
425SH29AB1	CSD	429 - 48
425SH38AB1	CSD	430 -140
426EH2AB1	CSD	240 -113
426EH3AB1	CSD	240 -170
426EH4AB1	CSD	240 -177
426EH6AB1	CSD	240 -178
426EH8AB1	CSD	240 -186
426EH10AB1	CSD	240 -188
426EH12AB1	CSD	240 -192
426EH16AB1	CSD	240 -197
426EH20AB1	CSD	240 -206
450R1B	EDL	290 - 87
450R2B	EDL	290 - 88
450R3B	EDL	290 - 89
450R4B	EDL	290 - 90
450R5B	EDL	290 - 91
450R6B	EDL	290 - 92
450R7B	EDL	290 - 93
450R8B	EDL	290 - 94
450R9B	EDL	290 - 95
450R10B	EDL	402 -201
450R11B	EDL	405 - 81
450R12B	EDL	406 -132
450R13B	EDL	408 -207
450R14B	EDL	409 - 94
450R15B	EDL	411 -109
450R16B	EDL	412 - 84
450R18B	EDL	414 - 4
450R20B	EDL	415 - 92
450R22B	EDL	416 - 80
450R24B	EDL	417 - 17
450R26B	EDL	418 - 63
450R28B	EDL	418 -172
450R30B	EDL	419 -169
450R32B	EDL	420 - 66
450R34B	EDL	420 -141
450R36B	EDL	421 - 23
450R38B	EDL	421 - 84
450R40B	EDL	422 - 29
450R42B	EDL	422 -112
450R44B	EDL	422 -155
450R46B	EDL	423 - 7
450R48B	EDL	423 - 39
450R50B	EDL	424 - 27
470PDA10	INR	311 - 89
470PDA20	INR	311 - 90
470PDA40	INR	311 - 91
470PDA60	INR	311 - 92
471PDA120	♦INR	408 - 79
	INRJ	
471PDA140	♦INR	410 -116
	INRJ	
471PDA160	♦INR	413 - 64
	INRJ	
471PDA180	♦INR	414 - 66
	INRJ	
471PDA200	♦INR	415 -167
	INRJ	
471PDA210	♦INR	416 - 32
471PDA220	♦INR	416 -102
471PDA230	♦INR	416 -169
471PDA240	♦INR	417 - 37
471PDA250	♦INR	417 -217
500EXH21	TOSJ	264 - 96
500HXD25	TOSJ	424 - 62
500R1B	EDL	290 -139
500R2B	EDL	290 -173
500R3B	EDL	290 -203
500R4B	EDL	291 - 6
500R5B	EDL	291 - 32
500R6B	EDL	291 - 47
500R7B	EDL	291 - 59
500R8B	EDL	291 - 69
500R9B	EDL	291 - 81
500R10B	EDL	402 -205
500R11B	EDL	405 - 83
500R12B	EDL	406 -138
500R13B	EDL	408 -209
500R14B	EDL	409 - 98
500R15B	EDL	411 -114
500R16B	EDL	412 - 88
500R18B	EDL	414 - 7
500R20B	EDL	415 - 95
500R22B	EDL	416 - 81
500R24B	EDL	417 - 18
500R26B	EDL	418 - 64
500R28B	EDL	418 -173
500R30B	EDL	419 -170
500R32B	EDL	420 - 67
500R34B	EDL	420 -142
500R36B	EDL	421 - 24

TYPE No.	MFRS	Pg&Line
500R38B	EDL	421 - 85
500R40B	EDL	422 - 30
500R42B	EDL	422 -113
500R44B	EDL	422 -156
500R46B	EDL	423 - 8
500R48B	EDL	423 - 40
500R50B	EDL	424 - 30
500RS20	♦CODI	415 - 35
500S10	CODI	401 - 92
500S15	CODI	411 - 49
500S20	CODI	415 - 34
500V5A	♦INR	311 - 98
500V10A	♦INR	311 -102
500V20A	♦INR	311 -106
500V30A	♦INR	311 -108
500V40A	♦INR	311 -112
500V50A	♦INR	311 -115
500V60A	♦INR	311 -124
501V60	♦INR	311 -118
501V60B	♦INR	311 -122
	INRJ	
501V80	♦INR	311 -130
501V80B	♦INR	311 -134
	INRJ	
501V100	♦INR	404 -196
501V100B	♦INR	404 -199
	INRJ	
501V120	♦INR	408 - 81
	INRJ	
501V120B	♦INR	408 - 86
	INRJ	
501V140	♦INR	410 -118
	INRJ	
501V140B	♦INR	410 -122
	INRJ	
501V160	♦INR	413 - 65
	INRJ	
501V180	♦INR	414 - 68
	INRJ	
501V200	♦INR	415 -169
	INRJ	
501V210	INR	416 - 33
	INRJ	
501V220	INR	416 -103
	INRJ	
501V230	INR	416 -170
	INRJ	
501V240	INR	417 - 38
	INRJ	
501V250	INR	417 -219
501VF60B	INRJ	311 -119
501VF80B	INRJ	311 -131
501VF100B	♦INR	404 -197
	INRJ	
501VF120	INRJ	408 - 82
501VF120B	INRJ	408 - 83
501VF140	♦INR	410 -119
	INRJ	
501VF140B	INRJ	410 -120
501VF160	INRJ	413 - 66
501VF180	♦INR	414 - 69
	INRJ	
501VF200	INRJ	415 -170
501VF210	♦INR	416 - 34
	INRJ	
501VF220	♦INR	416 -104
	INRJ	
501VF230	♦INR	416 -171
	INRJ	
501VF240	INRJ	417 - 39
501VR60B	INRJ	311 -127
501VR80B	INRJ	311 -137
501VR100B	INRJ	404 -206
501VR120	♦INR	408 - 87
	INRJ	
501VR120B	INRJ	408 - 89
501VR140	INRJ	410 -123
501VR140B	♦INR	410 -125
	INRJ	
501VR160	INRJ	413 - 68
501VR180	♦INR	414 - 71
	INRJ	
501VR200	INRJ	415 -172
501VR210	INR	416 - 36
	INRJ	
501VR220	INR	416 -106
	INRJ	
501VR230	INR	416 -173
	INRJ	
501VR240	INR	417 - 41
	INRJ	
502V5A	♦INR	311 - 99
502V10A	♦INR	311 -103
502V20A	♦INR	311 -107
502V30A	♦INR	311 -109
502V40A	♦INR	311 -113
502V50A	♦INR	311 -116
502V60A	♦INR	311 -125
503PJA180	INRJ	414 - 67
503PJA200	INRJ	415 -168
503PJA250	INRJ	417 -218
503PJLA60	INRJ	268 -151
503PJLA80	INRJ	268 -155
503PJLA100	INRJ	268 -159
503PJLA120	INRJ	268 -164
503V60	♦INR	311 -120
503V60B	♦INR	311 -123
503V80	♦INR	311 -132
503V80B	♦INR	311 -135
503V100	♦INR	404 -200
503V100B	♦INR	404 -201
503V120	♦INR	408 - 84
503V120B	♦INR	404 -202
503V140	♦INR	410 -121

TYPE No.	MFRS	Pg&Line
503V140B	♦INR	404 -203
503V160	♦INR	413 - 67
503V180	♦INR	414 - 70
503V200	♦INR	415 -171
503V210	♦INR	416 - 35
503V220	♦INR	416 -105
503V230	♦INR	416 -172
503V240	♦INR	417 - 40
503V250	♦INR	417 -220
523AB1AF1	CSD	366 - 52
523AB1AI1	CSD	365 - 29
523AC1AD1	♦CSD	293 -137
523AC1AI1	CSD	365 - 30
523AD1AD1	♦CSD	290 - 82
523BB1AF1	CSD	366 - 78
523BB1AI1	CSD	365 - 52
523BC1AD1	♦CSD	293 -144
523BC1AI1	CSD	365 - 53
523BD1AD1	♦CSD	290 - 83
523DB1AF1	CSD	366 -107
523DB1AI1	CSD	365 - 75
523DC1AD1	♦CSD	293 -153
523DC1AI1	CSD	365 - 76
523DD1AD1	♦CSD	290 - 84
523FB1AF1	CSD	366 - 29
523FB1AI1	CSD	365 - 14
523FC1AD1	♦CSD	293 -131
523FC1AI1	CSD	365 - 15
523FD1AD1	♦CSD	290 - 81
523MB1AF1	CSD	366 -135
523MB1AI1	CSD	365 - 94
523MB2AI1	CSD	402 -105
523MC1AD1	♦CSD	293 -161
523MC1AI1	CSD	365 - 95
523MC2AI1	CSD	402 -106
523MD1AD1	♦CSD	290 - 85
523MH5AE1	CSD	417 -163
523MH5AS1	♦CSD	417 -102
523MH9AS1	♦CSD	423 -196
523MH10AE1	CSD	423 -199
523MH13AS1	♦CSD	425 -185
523MH17AS1	♦CSD	427 -156
523MH21AS1	♦CSD	428 -134
523MH25AS1	♦CSD	429 -118
523NB1AF1	CSD	366 -162
523NB1AI1	CSD	365 -115
523NB2AI1	CSD	411 - 97
523NC1AD1	♦CSD	293 -165
523NC1AI1	CSD	365 -116
523NC2AI1	CSD	411 - 98
523NC4AE1	CSD	417 -176
523NC7AE1	CSD	424 - 8
523NC10AE1	CSD	425 -199
523ND1AD1	♦CSD	290 - 86
523ND4AE1	CSD	417 -164
523ND7AE1	CSD	423 -200
523ND10AE1	CSD	425 -187
523NH10AE1	CSD	425 -188
523NH13AE1	CSD	427 -158
523NH16AE1	CSD	428 -136
523NH20AE1	CSD	429 -122
524AB1AF1	CSD	272 -150
524AC1AD1	♦CSD	293 - 44
524AD1AD1	♦CSD	290 - 14
524BB1AF1	CSD	272 -154
524BC1AD1	♦CSD	293 - 46
524BD1AD1	♦CSD	290 - 15
524DB1AF1	CSD	272 -158
524DC1AD1	♦CSD	293 - 49
524DD1AD1	♦CSD	290 - 16
524FB1AF1	CSD	272 -146
524FC1AD1	♦CSD	293 - 42
524FD1AD1	♦CSD	290 - 13
524MB1AF1	CSD	272 -162
524MC1AD1	♦CSD	293 - 52
524MC5AE1	CSD	417 -169
524MC10AE1	CSD	423 -211
524MD1AD1	♦CSD	290 - 17
524MD5AE1	CSD	417 -149
524MD10AE1	CSD	423 -178
524MH5AE1	CSD	417 -150
524MH5AS1	♦CSD	417 -146
524MH9AS1	♦CSD	423 -173
524MH10AE1	CSD	423 -179
524MH13AE1	CSD	425 -176
524MH13AS1	♦CSD	425 -172
524MH17AE1	CSD	427 -140
524MH17AS1	♦CSD	427 -137
524MH21AE1	CSD	428 -123
524MH21AS1	♦CSD	428 -121
524MH25AS1	♦CSD	429 -107
550R1B	EDL	291 - 84
550R2B	EDL	291 - 85
550R3B	EDL	291 - 86
550R4B	EDL	291 - 87
550R5B	EDL	291 - 88
550R6B	EDL	291 - 89
550R7B	EDL	291 - 90
550R8B	EDL	291 - 91
550R9B	EDL	291 - 92
550R10B	EDL	402 -216
550R11B	EDL	405 - 84
550R12B	EDL	406 -141
550R13B	EDL	408 -210
550R14B	EDL	409 - 99
550R15B	EDL	411 -118
550R16B	EDL	412 - 90
550R18B	EDL	414 - 8
550R20B	EDL	415 -102
550R22B	EDL	416 - 82
550R24B	EDL	417 - 19
550R26B	EDL	418 - 65
550R28B	EDL	418 -174
550R30B	EDL	419 -174

TYPE No.	MFRS	Pg&Line
550R32B	EDL	420 - 68
550R34B	EDL	420 -143
550R36B	EDL	421 - 25
550R38B	EDL	421 - 86
550R40B	EDL	422 - 32
550R42B	EDL	422 -114
550R44B	EDL	422 -157
550R46B	EDL	423 - 9
550R48B	EDL	423 - 41
550R50B	EDL	424 - 37
600HT1U	♦INR	303 - 85
600HT2U	♦INR	303 -105
600HT3U	♦INR	303 -122
600HT4U	♦INR	303 -146
600HT6U	♦INR	303 -184
600HT8U	♦INR	303 -199
600HT10U	♦INR	403 -214
600R1B	EDL	291 -146
600R2B	EDL	291 -196
600R3B	EDL	292 - 14
600R4B	EDL	292 - 43
600R5B	EDL	292 - 81
600R6B	EDL	292 -102
600R7B	EDL	292 -140
600R8B	EDL	292 -154
600R9B	EDL	292 -189
600R10B	EDL	403 - 1
600R11B	EDL	405 - 85
600R12B	EDL	406 -144
600R13B	EDL	408 -211
600R14B	EDL	409 -100
600R15B	EDL	411 -119
600R16B	EDL	412 - 93
600R18B	EDL	414 - 9
600R20B	EDL	415 -105
600R22B	EDL	416 - 83
600R24B	EDL	417 - 20
600R26B	EDL	418 - 66
600R28B	EDL	418 -175
600R30B	EDL	419 -177
600R32B	EDL	420 - 69
600R34B	EDL	420 -144
600R36B	EDL	421 - 26
600R38B	EDL	421 - 87
600R40B	EDL	422 - 35
600R42B	EDL	422 -115
600R44B	EDL	422 -158
600R46B	EDL	423 - 10
600R48B	EDL	423 - 42
600R50B	EDL	424 - 41
651PDB40L20	♦INR	271 - 56
651PDB40L25	♦INR	271 - 57
651PDB50L20	♦INR	269 - 53
651PDB50L25	♦INR	269 - 54
651PDB60L20	♦INR	271 - 58
651PDB60L25	♦INR	271 - 59
651PDB80L20	♦INR	271 - 60
651PDB80L25	♦INR	271 - 61
651PDB80L30	♦INR	271 - 62
651PDB100L25	♦INR	271 - 63
651PDB100L30	♦INR	271 - 64
651PDB120L25	♦INR	271 - 65
651PDB120L30	♦INR	271 - 66
651PDB130L30	♦INR	270 - 61
651PDB140L30	♦INR	270 - 68
651PDB160L30	♦INR	270 - 89
673-1	♦UNI	361 -154
673-1S	♦UNI	361 -155
673-2	♦UNI	361 -181
673-2S	♦UNI	361 -182
673-3	♦UNI	362 - 10
673-3S	♦UNI	362 - 11
673-4	♦UNI	362 - 16
673-4S	♦UNI	362 - 17
673-5	♦UNI	362 - 47
673-5S	♦UNI	362 - 48
673-6	♦UNI	362 - 51
673-6S	♦UNI	362 - 52
673-7	♦UNI	360 - 45
673-8	♦UNI	416 -218
673-9	♦UNI	421 - 6
673-10	♦UNI	422 -101
673-11	♦UNI	423 - 23
673-12	♦UNI	423 -116
673-75	♦UNI	413 -203
673-85	♦UNI	419 -104
676-1	♦UNI	272 -165
676-1S	♦UNI	247 - 84
676-2	♦UNI	272 -167
676-2S	♦UNI	247 -134
676-3	♦UNI	272 -168
676-3S	♦UNI	247 -152
676-4	♦UNI	272 -169
676-4S	♦UNI	247 -165
676-5	♦UNI	272 -170
676-5S	♦UNI	247 -177
676-6	♦UNI	272 -171
676-6S	♦UNI	247 -190
676-12	♦UNI	272 -172
676-18	♦UNI	272 -173
676-24	♦UNI	272 -174
676-30	♦UNI	272 -175
676-36	♦UNI	272 -176
676-42	♦UNI	272 -177
676-48	♦UNI	272 -178
676-50	♦UNI	272 -179
678-1	♦UNI	373 - 4
678-2	♦UNI	373 - 9
678-3	♦UNI	373 - 15
678-4	♦UNI	373 - 17
678-5	♦UNI	373 - 21
678-6	♦UNI	373 - 23
679-1	♦UNI	369 -200
679-2	♦UNI	370 - 9

Δ-Registered with JEDEC by this manufacturer

♦-Mfr's data sheet available in microfilm service

1. TYPE No. CROSS INDEX

IN TYPE NUMBER SEQUENCE

TYPE No.	MFRS	Pg&Line
679-3	♦UNI	370 - 37
679-4	♦UNI	370 - 46
679-5	♦UNI	370 - 73
679-6	♦UNI	370 - 81
680-1	♦UNI	367 -139
680-2	♦UNI	367 -177
680-3	♦UNI	367 -201
680-4	♦UNI	367 -217
680-5	♦UNI	368 - 21
680-6	♦UNI	368 - 35
681-1D	♦UNI	296 - 51
681-1N	♦UNI	296 - 52
681-1P	♦UNI	296 - 53
681-2D	♦UNI	296 - 84
681-2N	♦UNI	296 - 85
681-2P	♦UNI	296 - 86
681-3D	♦UNI	296 -104
681-3N	♦UNI	296 -105
681-3P	♦UNI	296 -106
681-4D	♦UNI	296 -121
681-4N	♦UNI	296 -122
681-4P	♦UNI	296 -123
681-5D	♦UNI	296 -146
681-5N	♦UNI	296 -147
681-5P	♦UNI	296 -148
681-6D	♦UNI	296 -157
681-6N	♦UNI	296 -158
681-6P	♦UNI	296 -159
682-1	♦UNI	273 - 64
682-2	♦UNI	273 - 66
682-3	♦UNI	273 - 68
682-4	♦UNI	273 - 70
682-5	♦UNI	273 - 72
682-6	♦UNI	273 - 74
683-1	♦UNI	273 - 9
683-2	♦UNI	273 - 32
683-3	♦UNI	273 - 36
683-4	♦UNI	273 - 54
683-5	♦UNI	273 - 56
683-6	♦UNI	273 - 59
684-1	♦UNI	258 -142
684-2	♦UNI	259 -145
684-3	♦UNI	259 -208
684-4	♦UNI	260 -101
684-5	♦UNI	260 -135
684-6	♦UNI	261 - 21
688-10	♦UNI	277 - 75
688-12	♦UNI	276 -130
688-15	♦UNI	276 - 49
688-18	♦UNI	276 - 41
688-20	♦UNI	275 -203
688-25	♦UNI	275 - 28
689-1D(M)	♦UNI	272 - 80
689-1N	♦UNI	272 - 81
689-1P	♦UNI	272 - 82
689-2D(M)	♦UNI	272 -100
689-2N	♦UNI	272 -101
689-2P	♦UNI	272 -102
689-3D	♦UNI	272 -105
689-3N	♦UNI	272 -106
689-3P	♦UNI	272 -107
689-4D	♦UNI	272 -110
689-4N	♦UNI	272 -111
689-4P	♦UNI	272 -112
689-5D	♦UNI	272 -113
689-5N	♦UNI	272 -114
689-5P	♦UNI	272 -115
689-6D	♦UNI	272 -118
689-6N	♦UNI	272 -119
689-6P	♦UNI	272 -120
695-1	♦UNI	372 -157
695-2	♦UNI	372 -160
695-3	♦UNI	372 -166
695-4	♦UNI	372 -167
695-5	♦UNI	372 -174
695-6	♦UNI	372 -176
696-1	♦UNI	273 - 65
696-2	♦UNI	273 - 67
696-3	♦UNI	273 - 69
696-4	♦UNI	273 - 71
696-5	♦UNI	273 - 73
696-6	♦UNI	273 - 75
697-1	♦UNI	364 - 23
697-2	♦UNI	364 - 27
697-3	♦UNI	364 - 32
697-4	♦UNI	364 - 33
697-5	♦UNI	364 - 39
697-6	♦UNI	364 - 40
698-1	♦UNI	273 - 10
698-2	♦UNI	273 - 33
698-3	♦UNI	273 - 37
698-4	♦UNI	273 - 55
698-5	♦UNI	273 - 57
698-6	♦UNI	273 - 60
700-1	♦UNI	372 - 93
700-2	♦UNI	372 - 95
700-3	♦UNI	372 - 96
700-4	♦UNI	372 - 97
700-5	♦UNI	372 - 98
700-6	♦UNI	372 - 99
701-1	♦UNI	247 - 85
701-2	♦UNI	247 -135
701-3	♦UNI	247 -153
701-4	♦UNI	247 -166
701-5	♦UNI	247 -178
701-6	♦UNI	247 -191
701F6S	NECJ	311 -126
701F8S	NECJ	311 -136
701F10S	NECJ	404 -205
701F12S	NECJ	408 - 88
701F14S	NECJ	410 -124
701F16S	NECJ	413 - 69
701F18S	NECJ	414 - 72
703PJA60	INRJ	311 -205
703PJA80	INRJ	311 -207
703PJA100	INRJ	404 -218
703PJA120	INRJ	408 -102
703PJA140	INRJ	410 -136
703PJA160	INRJ	413 - 80
704-15K36	♦GSE	339 - 33
704-15K36T	♦GSE	339 - 34
704-34	♦GSE	339 - 35
704-34A	GSE	339 - 36
704-34B	GSE	339 - 37
704-45A	GSE	339 - 38
704-56A	GSE	339 - 39
704-190A	GSE	339 - 40
800-1	♦UNI	373 - 67
800-2	♦UNI	373 - 68
800-3	♦UNI	373 - 69
800-4	♦UNI	373 - 70
800-5	UNI	373 - 74
800-6	UNI	373 - 75
800EXD26	TOSJ	418 - 20
800EXH21	TOSJ	264 - 97
800FXD26	TOSJ	419 -219
800HB1U	♦INR	305 - 34
800HB2U	♦INR	305 - 37
800HB3U	♦INR	305 - 41
800HB4U	♦INR	305 - 46
800HB6U	♦INR	305 - 51
800PDB10	♦INR	312 - 83
800PDB20	♦INR	312 - 88
800PDB30	♦INR	312 - 92
800PDB40	♦INR	312 - 96
800PDB50	♦INR	312 -100
800PDB60	♦INR	312 -105
800UD26	TOSJ	413 - 93
800YD26	TOSJ	415 -193
800YKD26	TOSJ	418 -132
801-1	♦UNI	372 -197
801-2	♦UNI	372 -198
801-3	♦UNI	372 -200
801-4	♦UNI	372 -201
801-5	UNI	372 -205
801-6	UNI	372 -206
801F8H	NECJ	312 - 29
801F12H	NECJ	408 -109
801F16H	NECJ	413 - 87
801F20H	NECJ	415 -186
801F25H	NECJ	418 - 13
801F30H	NECJ	419 -215
801PDB60B	♦INR	312 -104
801PDB80B	♦INR	312 -114
801PDB100B	♦INR	405 - 18
801PDB120	♦INR	408 -115
801PDB120B	♦INR	408 -130
801PDB140	♦INR	410 -147
801PDB140B	♦INR	410 -161
801PDB160	♦INR	413 - 92
801PDB180	♦INR	414 - 93
801PDB200	♦INR	415 -192
801PDB210	♦INR	416 - 41
801PDB220	♦INR	416 -121
801PDB230	♦INR	416 -178
801PDB240	♦INR	417 - 55
801PDB250	♦INR	418 - 18
801PJA250	INRJ	418 - 19
801PJA300	INRJ	419 -218
801PJA400	INRJ	422 - 73
802-1	♦UNI	371 - 12
802-2	♦UNI	371 - 31
802-3	♦UNI	371 - 46
802-4	♦UNI	371 - 48
803-1	♦UNI	369 -149
803-2	♦UNI	369 -150
803-3	♦UNI	369 -152
803-4	♦UNI	369 -153
804-1D	♦UNI	297 - 98
804-1N	♦UNI	297 - 99
804-1P	♦UNI	297 -100
804-2D	♦UNI	297 -113
804-2N	♦UNI	297 -114
804-2P	♦UNI	297 -115
804-3D	♦UNI	297 -126
804-3N	♦UNI	297 -127
804-3P	♦UNI	297 -128
804-4D	♦UNI	297 -129
804-4N	♦UNI	297 -130
851PDE40L20	♦INR	312 - 38
851PDE40L25	♦INR	312 - 39
851PDE40L30	♦INR	312 - 40
851PDE50L20	♦INR	312 - 41
851PDE50L25	♦INR	312 - 42
851PDE50L30	♦INR	312 - 43
851PDE60L20	♦INR	312 - 44
851PDE60L25	♦INR	312 - 45
851PDE60L30	♦INR	312 - 46
851PDE80L20	♦INR	312 - 47
851PDE80L25	♦INR	312 - 48
851PDE80L30	♦INR	312 - 49
851PDE100L20	♦INR	405 - 10
851PDE100L25	♦INR	405 - 8
851PDE100L30	♦INR	405 - 9
851PDE120L20	♦INR	408 -121
851PDE120L25	♦INR	408 -119
851PDE120L30	♦INR	408 -120
851PDE130L20	♦INR	409 - 30
851PDE130L25	♦INR	409 - 31
851PDE130L30	♦INR	409 - 29
851PDE140L20	♦INR	410 -152
851PDE140L25	♦INR	410 -153
851PDE140L30	♦INR	410 -151
851PDE160L20	♦INR	413 - 98
851PDE160L25	♦INR	413 - 99
851PDE160L30	♦INR	413 - 97
1000DS10	CODI	427 -153
1000HB1U	♦INR	305 -193
1000HB2U	♦INR	305 -219
1000HB3U	♦INR	306 - 15
1000HB4U	♦INR	306 - 46
1000HB6U	♦INR	306 -103
1000HT1U	♦INR	305 -195
1000HT2U	♦INR	306 - 1
1000HT3U	♦INR	306 - 18
1000HT4U	♦INR	306 - 48
1000HT6U	♦INR	306 -104
1000HT8U	♦INR	306 -150
1001PDE120	♦INR	408 -131
1001PDE140	♦INR	410 -162
1001PDE160	♦INR	413 -107
1001PDE180	♦INR	414 -103
1001PDE200	♦INR	415 -204
1001PDE210	♦INR	416 - 46
1001PDE220	♦INR	416 -127
1001PDE230	♦INR	416 -183
1001PDE240	♦INR	417 - 62
1001PDE250	♦INR	418 - 24
1003PJA250	INRJ	418 - 25
1003PJA300	INRJ	420 - 5
1101PDK120	♦INR	408 -135
1101PDK140	♦INR	410 -165
1101PDK160	♦INR	413 -108
1101PDK180	♦INR	414 -104
1101PDK200	♦INR	415 -205
	INRJ	
1101PDK220	♦INR	416 -128
	INRJ	
1101PDK240	♦INR	417 - 64
	INRJ	
1101PDK260	♦INR	418 - 95
	INRJ	
1101PDK280	♦INR	418 -203
	INRJ	
1101PDK300	♦INR	420 - 7
	INRJ	
1200PDE10	♦INR	312 -151
1200PDE20	♦INR	312 -156
1200PDE30	♦INR	312 -161
1200PDE40	♦INR	312 -166
1200PDE50	♦INR	312 -171
1200PDE60	♦INR	312 -176
1201PDE20	♦INR	312 -158
1201PDE30	♦INR	312 -163
1201PDE40	♦INR	312 -168
1201PDE60	♦INR	312 -179
1201PDE80	♦INR	312 -188
1201PDE100	♦INR	405 - 29
1201PDE120	♦INR	408 -143
1201PDE140	♦INR	410 -172
1205	♦DII	252 -111
1205A	♦DII	252 -112
1500PJA10	INRJ	312 -200
1500PJA20	INRJ	312 -202
1500PJA30	INRJ	312 -205
1500PJA40	INRJ	312 -207
1505	♦DII	252 -123
1505A	♦DII	252 -124
1600EXD24	TOSJ	418 - 42
1600FD26	TOSJ	312 -220
1600FXD24	TOSJ	420 - 17
1601PDK120	♦INR	408 -151
	INRJ	
1601PDK140	♦INR	410 -183
	INRJ	
1601PDK160	♦INR	413 -121
	INRJ	
1601PDK180	♦INR	414 -117
	INRJ	
1601PDK200	♦INR	416 - 1
	INRJ	
1601PDK210	♦INRJ	416 - 55
1601PDK220	♦INR	416 -138
	INRJ	
1601PDK230	♦INRJ	416 -192
1601PDK240	♦INR	417 - 78
	INRJ	
1601PDK250	♦INR	418 - 40
	INRJ	
1750	♦HIEE	439 - 26
1751	♦HIEE	439 - 27
1754	♦HIEE	439 - 28
1755	♦HIEE	439 - 29
1762	♦HIEE	439 - 30
1763	♦HIEE	439 - 31
1764	♦HIEE	439 - 32
1765	♦HIEE	439 - 33
1768	♦HIEE	439 - 34
1785	♦HIEE	439 - 35
1793	♦HIEE	439 - 36
1794	♦HIEE	439 - 37
1795	♦HIEE	439 - 38
1798	♦HIEE	439 - 39
1813	♦HIEE	439 - 40
1814	♦HIEE	439 - 41
1815	♦HIEE	439 - 42
1833	♦HIEE	439 - 43
1834	♦HIEE	439 - 44
1835	♦HIEE	439 - 45
1843	♦HIEE	439 - 46
2001PDK60	♦INR	313 - 44
2001PDK80	INR	313 - 49
2001PDK100	INR	405 - 45
2001PDK120	INR	408 -159
2001PDK140	INR	410 -190
2001PDK160	INR	413 -129
2501PDK20	♦INR	313 - 89
	INRJ	
2501PDK30	♦INR	313 - 90
	INRJ	
2501PDK40	♦INR	313 - 91
	INRJ	
2501PDK60	♦INR	313 - 92
	INRJ	
2601PDN120	♦INR	408 -167
	INRJ	
2601PDN140	♦INR	410 -195
	INRJ	
2601PDN160	♦INR	413 -138
	INRJ	
2601PDN180	♦INR	414 -135
	INRJ	
2601PDN200	♦INR	416 - 21
	INRJ	
2601PDN210	INRJ	416 - 64
2601PDN220	INRJ	416 -156
2601PDN230	INRJ	416 -199
2601PDN240	♦INR	417 - 97
	INRJ	
2601PDN250	♦INR	418 - 50
	INRJ	
3000BD21	TOSJ	313 -105
3000PJA10	INRJ	313 -103
3001PDN60	♦INR	433 -211
	INRJ	
3001PDN80	♦INR	433 -213
	INRJ	
3001PDN100	♦INR	405 - 53
	INRJ	
3001PDN120	♦INR	408 -169
	INRJ	
3001PDN140	♦INR	410 -197
	INRJ	
3205	♦DII	252 -113
3205A	♦DII	252 -114
3505	♦DII	252 -125
3505A	♦DII	252 -126
4001PDR60	♦INR	313 -143
4001PDR80	♦INR	313 -144
4001PDR100	♦INR	405 - 57
4001PDR120	♦INR	408 -173
4001PDR140	♦INR	410 -199
4001PDR160	♦INR	413 -140
4001PDR180	♦INR	414 -138
4001PDR200	♦INR	416 - 25
5555E	♦SCN	339 - 41
5556E	♦SCN	339 - 42
5557E	♦SCN	339 - 43
5558E	♦SCN	339 - 44
9491AJ	SONY	163 - 59
9491AM	SONY	163 - 60
9491BJ	SONY	163 - 61
9491BM	SONY	163 - 62
A1A1	EDL	275 - 33
A1A5	EDL	275 - 34
A1A9	EDL	275 - 35
A1B1	EDL	275 - 49
A1B5	EDL	275 - 50
A1B9	EDL	275 - 51
A1C1	EDL	275 - 69
A1C5	EDL	275 - 70
A1C9	EDL	275 - 71
A1D1	EDL	275 - 87
A1D5	EDL	275 - 88
A1D9	EDL	275 - 89
A1E1	EDL	275 -103
A1E5	EDL	275 -104
A1E9	EDL	275 -105
A1F1	EDL	275 -117
A1F5	EDL	275 -118
A1F9	EDL	275 -119
A1G1	EDL	275 -129
A1G5	EDL	275 -130
A1G9	EDL	275 -131
A1H1	EDL	275 -140
A1H5	EDL	275 -141
A1H9	EDL	275 -142
A1K1	EDL	275 -149
A1K5	EDL	275 -150
A1K9	EDL	275 -151
A1M1	EDL	401 - 45
A1M5	EDL	401 - 46
A1M9	EDL	401 - 47
A1N1	EDL	405 -199
A1N5	EDL	405 -200
A1N9	EDL	405 -201
A2A1	EDL	277 - 77
A2A4	EDL	276 -118
A2A5	EDL	277 - 78
A2A9	EDL	277 - 79
A2B1	EDL	277 - 91
A2B4	EDL	276 -119
A2B5	EDL	277 - 92
A2B9	EDL	277 - 93
A2C1	EDL	277 -106
A2C4	EDL	276 -120
A2C5	EDL	277 -107
A2C9	EDL	277 -108
A2D1	EDL	277 -121
A2D4	EDL	276 -121
A2D5	EDL	277 -122
A2D9	EDL	277 -123
A2E1	EDL	277 -131
A2E4	EDL	276 -122
A2E5	EDL	277 -132
A2E9	EDL	277 -133
A2F1	EDL	277 -149
A2F4	EDL	276 -123
A2F5	EDL	277 -150
A2F9	EDL	277 -151
A2G1	EDL	277 -159
A2G4	EDL	276 -124
A2G5	EDL	277 -160
A2G9	EDL	277 -161
A2H1	EDL	277 -174
A2H4	EDL	276 -125
A2H5	EDL	277 -175
A2H9	EDL	277 -176
A2K1	EDL	277 -181
A2K4	EDL	276 -126
A2K5	EDL	277 -182
A2K9	EDL	277 -183
A2M1	EDL	401 - 98
A2M4	EDL	401 - 83
A2M5	EDL	401 - 99
A2M9	EDL	401 -100
A2N1	EDL	406 - 3
A2N4	EDL	405 -214
A2N5	EDL	406 - 4
A2N9	EDL	406 - 5
A2S009	TRWM	438 - 66
A2S024	TRWM	436 - 84
A2S087	♦TRWM	436 - 85
A2S097	♦TRWM	436 - 86
A2S302	♦TRWM	436 - 87
A2S303	♦TRWM	436 - 88
A2S305	♦TRWM	436 - 89
A2S306	♦TRWM	438 - 67
A2S308	♦TRWM	438 - 68
A2S356	♦TRWM	438 - 69
A2S370	♦TRWM	438 - 70
A2S396	♦TRWM	438 - 71
A2S401	♦TRWM	438 - 72
A2S566	♦TRWM	438 - 73
A2S730	TRWM	438 - 74
A2S800	TRWM	437 - 47
A2S804	TRWM	438 - 75
A2S805	TRWM	438 - 76
A2S807	TRWM	437 - 48
A2S810	♦TRWM	437 - 49
A2S811	♦TRWM	437 - 50
A2S813	♦TRWM	437 - 51
A2S814	♦TRWM	437 - 52
A2S815	♦TRWM	437 - 53
A2S818	♦TRWM	438 - 77
A2S819	♦TRWM	438 - 78
A2S825	♦TRWM	438 - 79
A2S826	♦TRWM	438 - 80
A2S860	♦TRWM	437 - 54
A2S862	♦TRWM	437 - 55
A2S864	♦TRWM	437 - 56
A2S865	♦TRWM	438 - 81
A2S866	♦TRWM	438 - 82
A2S900	♦TRWM	437 - 57
A2S912	♦TRWM	437 - 58
A2S970	♦TRWM	437 - 59
A3A1	EDL	277 -198
A3A3	EDL	277 -213
A3A5	EDL	277 -199
A3A9	EDL	277 -200
A3B1	EDL	278 - 6
A3B3	EDL	278 - 27
A3B5	EDL	278 - 7
A3B9	EDL	278 - 8
A3C1	EDL	278 - 45
A3C3	EDL	278 - 68
A3C5	EDL	278 - 46
A3C9	EDL	278 - 47
A3D1	EDL	278 - 92
A3D3	EDL	278 -110
A3D5	EDL	278 - 93
A3D9	EDL	278 - 94
A3E1	EDL	278 -126
A3E3	EDL	278 -149
A3E5	EDL	278 -127
A3E9	EDL	278 -128
A3F1	EDL	278 -167
A3F3	EDL	278 -182
A3F5	EDL	278 -168
A3F9	EDL	278 -169
A3G1	EDL	278 -197
A3G3	EDL	278 -220
A3G5	EDL	278 -198
A3G9	EDL	278 -199
A3H1	EDL	279 - 18
A3H3	EDL	279 - 25
A3H5	EDL	279 - 19
A3H9	EDL	279 - 20
A3K1	EDL	279 - 32
A3K3	EDL	279 - 45
A3K5	EDL	279 - 33
A3K9	EDL	279 - 34
A3M1	EDL	401 -113
A3M3	EDL	401 -123
A3M5	EDL	401 -114
A3M9	EDL	401 -115
A3N1	EDL	406 - 15
A3N3	EDL	406 - 24
A3N5	EDL	406 - 16
A3N9	EDL	406 - 17
A4A1	EDL	279 -129
A4A5	EDL	279 -130
A4A9	EDL	279 -131
A4B1	EDL	279 -135
A4B5	EDL	279 -136
A4B9	EDL	279 -137
A4C1	EDL	279 -142
A4C5	EDL	279 -143
A4C9	EDL	279 -144
A4D1	EDL	279 -148
A4D5	EDL	279 -149
A4D9	EDL	279 -150
A4E1	EDL	279 -155
A4E5	EDL	279 -156
A4E9	EDL	279 -157
A4F1	EDL	279 -161
A4F5	EDL	279 -162
A4F9	EDL	279 -163
A4G1	EDL	279 -167
A4G5	EDL	279 -168

Δ-Registered with JEDEC by this manufacturer

♦-Mfr's data sheet available in microfilm service

1. TYPE No. CROSS INDEX

IN TYPE NUMBER SEQUENCE

TYPE No.	MFRS	Pg&Line
A4G9	EDL	279 -169
A4H1	EDL	279 -174
A4H5	EDL	279 -175
A4H9	EDL	279 -176
A4K1	EDL	279 -180
A4K5	EDL	279 -181
A4K9	EDL	279 -182
A4M1	EDL	401 -140
A4M5	EDL	401 -141
A4M9	EDL	401 -142
A4N1	EDL	406 - 30
A4N5	EDL	406 - 31
A4N9	EDL	406 - 32
A5A1	EDL	279 -208
A5A2	EDL	274 -195
A5A5	EDL	279 -209
A5A9	EDL	279 -210
A5B1	EDL	280 - 50
A5B2	EDL	274 -203
A5B5	EDL	280 - 51
A5B9	EDL	280 - 52
A5C1	EDL	280 -138
A5C2	EDL	280 -161
A5C5	EDL	280 -139
A5C9	EDL	280 -140
A5D1	EDL	281 - 9
A5D2	EDL	274 -212
A5D5	EDL	281 - 10
A5D9	EDL	281 - 11
A5E1	EDL	281 - 45
A5E2	EDL	281 - 67
A5E5	EDL	281 - 46
A5E9	EDL	281 - 47
A5F1	EDL	281 -134
A5F2	EDL	275 - 6
A5F5	EDL	281 -135
A5F9	EDL	281 -136
A5G1	EDL	281 -162
A5G2	EDL	281 -182
A5G5	EDL	281 -163
A5G9	EDL	281 -164
A5H1	EDL	282 - 17
A5H2	EDL	282 - 25
A5H5	EDL	282 - 18
A5H9	EDL	282 - 19
A5K1	EDL	282 - 36
A5K2	EDL	282 - 89
A5K5	EDL	282 - 37
A5K9	EDL	282 - 38
A5M1	EDL	401 -159
A5M2	EDL	402 - 2
A5M5	EDL	401 -160
A5M9	EDL	401 -161
A5N1	EDL	406 - 42
A5N2	EDL	406 - 59
A5N5	EDL	406 - 43
A5N9	EDL	406 - 44
A6A1	EDL	282 -150
A6A5	EDL	282 -151
A6A9	EDL	282 -152
A6B1	EDL	282 -157
A6B5	EDL	282 -158
A6B9	EDL	282 -159
A6C1	EDL	282 -167
A6C5	EDL	282 -168
A6C9	EDL	282 -169
A6D1	EDL	282 -180
A6D5	EDL	282 -181
A6D9	EDL	282 -182
A6E1	EDL	282 -189
A6E5	EDL	282 -190
A6E9	EDL	282 -191
A6F1	EDL	282 -200
A6F5	EDL	282 -201
A6F9	EDL	282 -202
A6G1	EDL	282 -208
A6G5	EDL	282 -209
A6G9	EDL	282 -210
A6H1	EDL	283 - 3
A6H5	EDL	283 - 4
A6H9	EDL	283 - 5
A6K1	EDL	283 - 10
A6K5	EDL	283 - 11
A6K9	EDL	283 - 12
A6M1	EDL	402 - 17
A6M5	EDL	402 - 18
A6M9	EDL	402 - 19
A6N1	EDL	406 - 64
A6N5	EDL	406 - 65
A6N9	EDL	406 - 66
A7A1	EDL	283 - 73
A7A5	EDL	283 - 74
A7A9	EDL	283 - 75
A7B1	EDL	283 -122
A7B5	EDL	283 -123
A7B9	EDL	283 -124
A7C1	EDL	283 -185
A7C5	EDL	283 -186
A7C9	EDL	283 -187
A7D1	EDL	284 - 33
A7D5	EDL	284 - 34
A7D9	EDL	284 - 35
A7E1	EDL	284 - 73
A7E5	EDL	284 - 74
A7E9	EDL	284 - 75
A7F1	EDL	284 -138
A7F5	EDL	284 -139
A7F9	EDL	284 -140
A7G1	EDL	284 -175
A7G5	EDL	284 -176
A7G9	EDL	284 -177
A7H1	EDL	285 - 17
A7H5	EDL	285 - 18
A7H9	EDL	285 - 19

TYPE No.	MFRS	Pg&Line
A7K1	EDL	285 - 38
A7K5	EDL	285 - 39
A7K9	EDL	285 - 40
A7M1	EDL	402 - 39
A7M5	EDL	402 - 40
A7M9	EDL	402 - 41
A7N1	EDL	406 - 86
A7N5	EDL	406 - 87
A7N9	EDL	406 - 88
A11CA	♦HITJ	415 -219
A11CF	♦HITJ	418 - 39
A11DA	♦HITJ	420 - 16
A14A	GDC	287 - 9
	♦GESY	SST
A14B	GDC	280 -212
	♦GESY	
A14C	GDC	281 - 27
	♦GESY	
A14D	GDC	281 -117
	♦GESY	
A14E	GDC	281 -149
	♦GESY	
A14F	GDC	280 - 31
	♦GESY	SST
A14M	GESY	282 - 6
A14N	GESY	282 - 90
A14P	♦GESY	402 - 3
A14U	SST	279 -198
A15A	GDC	288 - 36
	♦GESY	NJS
	SST	
A15C	GDC	288 -160
	NJS	
A15E	GDC	289 - 26
	NJS	
A15F	GDC	287 -196
	♦GESY	NJS
	SST	
A15U	GDC	287 -154
	NJS	SST
A20	STI	231 - 87
A25A	♦NAT	298 -145
A25B	♦NAT	298 -201
A25D	♦NAT	299 - 57
A25M	♦NAT	299 -121
A25N	♦NAT	299 -162
A25P	♦NAT	403 -137
A25PB	♦NAT	406 -215
A040B250C700	♦SIEG	361 - 3
A72A	♦NAT	304 - 36
A72B	♦NAT	304 - 68
A72D	♦NAT	304 -114
A72M	♦NAT	304 -151
A72N	♦NAT	304 -183
A72P	♦NAT	404 - 11
A72PB	♦NAT	407 - 88
A77A	♦NAT	304 - 34
A77B	♦NAT	304 - 63
A77D	♦NAT	304 -111
A77M	♦NAT	304 -148
A77N	♦NAT	304 -181
A77P	♦NAT	404 - 7
A77PB	♦NAT	407 - 85
A100	MAL	280 -112
A114A	GDC	280 - 80
	♦GESY	
A114B	GDC	280 -175
	♦GESY	
A114C	GDC	281 - 19
	♦GESY	
A114D	GDC	281 - 81
	♦GESY	
A114E	GDC	281 -144
	♦GESY	
A114F	GDC	280 - 6
	♦GESY	
A114M	♦GESY	281 -196
A115A	GDC	288 - 27
	♦GESY	
A115B	GDC	288 -106
	♦GESY	
A115C	GDC	288 -157
	♦GESY	
A115D	GDC	288 -206
	♦GESY	
A115E	GDC	289 - 25
	♦GESY	
A115F	GDC	287 -190
	♦GESY	
A115M	GDC	289 - 72
	♦GESY	
A120UF	♦VMI	232 -107
A139E	♦NAT	299 - 82
A139M	♦NAT	299 -100
A139N	♦NAT	299 -151
A139P	♦NAT	403 -128
A160UF	♦VMI	232 -108
A170A	PRX	305 -200
A170B	PRX	306 - 7
A170C	PRX	306 - 23
A170D	PRX	306 - 69
A170E	PRX	306 - 84
A170M	PRX	306 -120
A170N	PRX	306 -174
A170P	PRX	404 - 78
A170PA	PRX	405 -105
A170PB	PRX	407 -166
A170PC	PRX	409 - 7
A170PD	PRX	410 - 17
A170PE	PRX	411 -157
A170S	PRX	306 -129
A170T	PRX	306 -180
A177A	PRX	305 -196
A177B	PRX	306 - 2

TYPE No.	MFRS	Pg&Line
A177C	PRX	306 - 19
A177D	PRX	306 - 49
A177E	PRX	306 - 77
A177M	PRX	306 -105
A177N	PRX	306 -151
A177P	PRX	404 - 63
A177PA	PRX	405 -104
A177PB	PRX	407 -143
A177PC	PRX	408 -220
A177PD	PRX	409 -217
A177PE	PRX	411 -148
A177S	PRX	306 -128
A177T	PRX	306 -179
A180A	♦NAT	307 - 67
	PRX	
A180B	♦NAT	307 -105
	PRX	
A180C	♦NAT	307 -132
	PRX	
A180D	♦NAT	307 -171
	PRX	
A180E	♦NAT	307 -191
	PRX	
A180M	♦NAT	307 -216
	PRX	
A180N	♦NAT	308 - 41
	PRX	
A180P	♦NAT	404 -104
	PRX	
A180PA	♦NAT	405 -117
	PRX	
A180PB	♦NAT	407 -196
	PRX	
A180PC	♦NAT	409 - 9
	PRX	
A180PD	♦NAT	410 - 35
	PRX	
A180PE	♦NAT	411 -165
	PRX	
A180S	♦NAT	308 - 16
	PRX	
A180T	♦NAT	308 - 54
	PRX	
A187A	PRX	307 - 55
A187B	PRX	307 - 84
A187C	PRX	307 -121
A187D	PRX	307 -149
A187E	PRX	307 -182
A187M	PRX	307 -196
A187N	PRX	308 - 21
A187P	PRX	404 - 86
A187PA	PRX	405 -114
A187PB	PRX	407 -179
A187PC	PRX	409 - 8
A187PD	PRX	410 - 27
A187PE	PRX	411 -162
A187S	PRX	308 - 9
A187T	PRX	308 - 50
A190A	PRX	309 -108
A190B	PRX	309 -127
A190C	PRX	309 -147
A190D	PRX	309 -168
A190E	PRX	309 -185
A190M	PRX	309 -201
A190N	PRX	310 - 9
A190P	PRX	404 -153
A190PA	PRX	405 -128
A190PB	PRX	408 - 30
A190PC	PRX	409 - 15
A190PD	PRX	410 - 71
A190PE	PRX	411 -182
A190S	PRX	309 -208
A190T	PRX	310 - 15
A197A	PRX	309 -100
A197B	PRX	309 -120
A197C	PRX	309 -141
A197D	PRX	309 -159
A197E	PRX	309 -179
A197M	PRX	309 -193
A197N	PRX	309 -217
A197P	PRX	404 -145
A197PA	PRX	405 -125
A197PB	PRX	408 - 19
A197PC	PRX	409 - 14
A197PD	PRX	410 - 65
A197PE	PRX	411 -179
A197S	PRX	309 -203
A197T	PRX	310 - 11
A198A	PRX	238 -212
A198B	PRX	239 - 98
A198C	PRX	239 -134
A198D	PRX	239 -192
A198E	PRX	239 -212
A198M	PRX	240 - 45
A198N	PRX	240 - 99
A198P	PRX	240 -142
A198PA	PRX	240 -148
A198PB	PRX	240 -156
A198PC	PRX	240 -161
A198PD	PRX	240 -166
A198PE	PRX	240 -173
A198S	PRX	240 - 59
A198T	PRX	240 -105
A200UF	♦VMI	232 -109
A315A(A)	♦GESY	238 -149
A315B(A)	♦GESY	239 - 27
A315F(A)	♦GESY	238 - 83
A315G(A)	♦GESY	239 - 4
A330E	PRX	312 -173
A330M	PRX	312 -178
A330N	PRX	312 -187
A330P	PRX	405 - 28
A330PA	PRX	405 -172
A330PB	PRX	408 -142

TYPE No.	MFRS	Pg&Line
A330PC	PRX	409 - 40
A330PD	PRX	410 -171
A330PE	PRX	411 -217
A330S	PRX	312 -183
A330T	PRX	312 -192
A337A	PRX	238 -206
A337B	PRX	239 - 93
A337C	PRX	239 -131
A337D	PRX	239 -187
A337E	PRX	239 -210
A337M	PRX	240 - 40
A337N	PRX	240 - 94
A337P	PRX	240 -137
A337PA	PRX	240 -146
A337PB	PRX	240 -151
A337PC	PRX	240 -159
A337PD	PRX	240 -164
A337PE	PRX	240 -171
A337S	PRX	240 - 57
A337T	PRX	240 -103
A387A	♦NAT	310 -139
A387B	♦NAT	310 -140
A387C	♦NAT	310 -141
A387D	♦NAT	310 -142
A387E	♦NAT	310 -143
A387M	♦NAT	310 -144
A387N	♦NAT	310 -146
A387P	♦NAT	310 -136
A387PA	♦NAT	310 -137
A387PB	♦NAT	310 -138
A387S	♦NAT	310 -145
A387T	♦NAT	310 -147
A390A	♦NAT	310 -195
	PRX	
A390B	♦NAT	310 -208
	PRX	
A390C	♦NAT	310 -214
	PRX	
A390D	♦NAT	311 - 9
	PRX	
A390E	♦NAT	311 - 16
	PRX	
A390M	♦NAT	311 - 31
	PRX	
A390N	♦NAT	311 - 52
	PRX	
A390P	♦NAT	404 -190
	PRX	
A390PA	♦NAT	405 -142
	PRX	
A390PB	♦NAT	408 - 70
	PRX	
A390PC	♦NAT	409 - 22
	PRX	
A390PD	♦NAT	410 -103
	PRX	
A390PE	♦NAT	411 -196
	PRX	
A390S	♦NAT	311 - 38
	PRX	
A390T	♦NAT	311 - 57
	PRX	
A397A	♦NAT	310 -191
	PRX	
A397B	♦NAT	310 -197
	PRX	
A397C	♦NAT	310 -211
	PRX	
A397D	♦NAT	310 -218
	PRX	
A397E	♦NAT	311 - 12
	PRX	
A397M	♦NAT	311 - 20
	PRX	
A397N	♦NAT	311 - 42
	PRX	
A397P	♦NAT	404 -180
	PRX	
A397PA	♦NAT	405 -140
	PRX	
A397PB	♦NAT	408 - 59
	PRX	
A397PC	♦NAT	409 - 20
	PRX	
A397PD	♦NAT	410 - 94
	PRX	
A397PE	♦NAT	411 -192
	PRX	
A397S	♦NAT	311 - 36
	PRX	
A397T	♦NAT	311 - 55
	PRX	
A398A	♦NAT	238 -214
	PRX	
A398B	♦NAT	239 - 99
	PRX	
A398C	♦NAT	239 -135
	PRX	
A398D	♦NAT	239 -193
	PRX	
A398E	♦NAT	239 -213
	PRX	
A398M	♦NAT	240 - 46
	PRX	
A398N	♦NAT	240 -100
	PRX	
A398P	♦NAT	240 -143
	PRX	
A398PA	♦NAT	240 -149
	PRX	
A398PB	♦NAT	240 -157
	PRX	
A398PC	♦NAT	240 -162
	PRX	

TYPE No.	MFRS	Pg&Line
A398PD	♦NAT	240 -167
	PRX	
A398PE	♦NAT	240 -174
	PRX	
A398S	♦NAT	240 - 60
	PRX	
A398T	♦NAT	240 -106
	PRX	
A399E	♦NAT	310 - 31
A399M	♦NAT	310 - 33
A399N	♦NAT	310 - 37
A399P	♦NAT	404 -156
A399PA	♦NAT	405 -129
A399PB	♦NAT	408 - 33
A399PC	♦NAT	409 - 16
A399PD	♦NAT	410 - 73
A399S	♦NAT	310 - 35
A399T	♦NAT	310 - 39
A402DA	♦NAT	408 - 93
A402DB	♦NAT	409 - 24
A402DC	♦NAT	410 -127
A402DD	♦NAT	411 -201
A402DE	♦NAT	413 - 71
A402DM	♦NAT	413 -162
A402DN	♦NAT	414 -144
A402DP	♦NAT	405 -152
A402DS	♦NAT	414 - 77
A402DT	♦NAT	415 -174
A402EA	♦NAT	416 -110
A402EB	♦NAT	416 -174
A402EC	♦NAT	417 - 43
A402ED	♦NAT	418 - 5
A402EE	♦NAT	418 - 80
A402EM	♦NAT	418 -126
A402EP	♦NAT	416 - 37
A430A	♦NAT	312 - 84
A430B	♦NAT	312 - 89
A430C	♦NAT	312 - 93
A430D	♦NAT	312 - 97
A430E	♦NAT	312 -101
	PRX	
A430M	♦NAT	312 -106
	PRX	
A430N	♦NAT	312 -115
	PRX	
A430P	♦NAT	405 - 19
	PRX	
A430PA	♦NAT	405 -166
	PRX	
A430PB	♦NAT	408 -132
	PRX	
A430PC	♦NAT	409 - 35
	PRX	
A430PD	♦NAT	410 -163
	PRX	
A430PE	♦NAT	411 -212
	PRX	
A430S	♦NAT	312 -110
	PRX	
A430T	♦NAT	312 -119
	PRX	
A432L	PRX	415 -163
A432LA	PRX	416 - 31
A432LB	PRX	416 -101
A432LC	PRX	416 -165
A432LD	PRX	417 - 36
A432LE	PRX	417 -216
A432LM	PRX	418 - 73
A432PM	♦GESY	413 - 63
	PRX	
A432PN	PRX	414 - 63
A432PT	PRX	414 -143
A433CA	PRX	420 - 36
A433CB	PRX	420 - 89
A433CP	PRX	419 -214
A433L	PRX	415 -185
A433LB	PRX	416 -118
A433LD	PRX	417 - 53
A433LM	PRX	418 - 88
A433LN	PRX	418 -195
A433LS	PRX	418 -130
A433LT	PRX	419 - 21
A433PM	PRX	413 - 84
A433PN	PRX	414 - 87
A433PS	PRX	413 -166
A433PT	PRX	414 -148
A437A	♦NAT	311 -167
A437B	♦NAT	311 -169
A437C	♦NAT	311 -172
A437D	♦NAT	311 -174
A437E	♦NAT	311 -210
	PRX	
A437M	♦NAT	311 -211
	PRX	
A437N	♦NAT	311 -213
	PRX	
A437P	♦NAT	404 -220
	PRX	
A437PA	♦NAT	405 -156
	PRX	
A437PB	♦NAT	408 -105
	PRX	
A437PC	♦NAT	409 - 27
	PRX	
A437PD	♦NAT	410 -139
	PRX	
A437PE	♦NAT	411 -206
	PRX	
A437S	♦NAT	311 -212
	PRX	
A437T	♦NAT	311 -215
	PRX	
A440E	PRX	312 -211
A440M	PRX	312 -213

Δ-Registered with JEDEC by this manufacturer

♦-Mfr's data sheet available in microfilm service

1. TYPE No. CROSS INDEX

IN TYPE NUMBER SEQUENCE

TYPE No.	MFRS	Pg&Line
A440N	PRX	312 -215
A440P	PRX	405 - 32
A440PA	PRX	405 -174
A440PB	PRX	408 -146
A440PC	PRX	409 - 42
A440PD	PRX	410 -177
A440PE	PRX	411 -219
A440S	PRX	312 -214
A440T	PRX	312 -216
A442CA	PRX	420 - 37
A442CB	PRX	420 - 90
A442CP	PRX	419 -216
A442L	PRX	311 -220
A442LA	PRX	312 - 1
A442LB	PRX	312 - 2
A442LC	PRX	312 - 3
A442LD	PRX	417 - 54
A442LE	PRX	418 - 14
A442LM	PRX	418 - 89
A442LN	PRX	418 -196
A442LS	PRX	418 -131
A442LT	PRX	419 - 22
A442PM	PRX	311 -217
A442PN	PRX	311 -218
A442PT	PRX	311 -219
A447E	PRX	239 -214
A447M	PRX	240 - 47
A447N	PRX	240 -101
A447P	PRX	240 -144
A447PA	PRX	240 -150
A447PB	PRX	240 -158
A447PC	PRX	240 -163
A447PD	PRX	240 -168
A447PE	PRX	240 -175
A447S	PRX	240 - 61
A447T	PRX	240 -107
A500L	♦NAT	415 -184
	PRX	
A500LA	♦NAT	416 - 40
	PRX	
A500LB	♦NAT	416 -117
	PRX	
A500LC	♦NAT	416 -177
	PRX	
A500LD	♦NAT	417 - 52
	PRX	
A500LE	♦NAT	418 - 12
	PRX	
A500LM	♦NAT	418 - 87
	PRX	
A500LN	♦NAT	418 -194
	PRX	
A500LP	♦NAT	419 -213
	PRX	
A500LS	♦NAT	418 -129
	PRX	
A500LT	♦NAT	419 - 20
	PRX	
A500PM	♦NAT	413 - 83
	PRX	
A500PN	♦NAT	414 - 86
	PRX	
A500PS	♦NAT	413 -165
	PRX	
A500PT	♦NAT	414 -147
	PRX	
A0503B20C700	SIEG	360 - 88
A0506B40C700	SIEG	360 -115
A0512B80C700	SIEG	360 -148
A0526B160C700	SIEG	360 -183
A0540B250C700	SIEG	361 - 4
A540L	♦NAT	415 -202
	PRX	
A540LA	♦NAT	416 - 44
	PRX	
A540LB	♦NAT	416 -125
	PRX	
A540LC	♦NAT	416 -181
	PRX	
A540LD	♦NAT	417 - 60
	PRX	
A540LE	♦NAT	418 - 23
A540LM	♦NAT	418 - 93
A540PM	♦NAT	413 -103
A540PN	♦NAT	414 - 99
A540PS	♦NAT	413 -168
A540PT	♦NAT	414 -150
A0553B320C700	SIEG	361 - 35
A570B	PRX	312 -203
A570C	PRX	312 -206
A570D	PRX	312 -208
A570E	PRX	312 -210
A570M	PRX	312 -212
A596N	♦NAT	311 -214
	PRX	
A596P	♦NAT	405 - 1
	PRX	
A596PA	♦NAT	405 -157
	PRX	
A596PB	♦NAT	408 -106
	PRX	
A596PC	♦NAT	409 - 28
	PRX	
A596PD	♦NAT	410 -140
	PRX	
A596PE	♦NAT	411 -207
A596T	♦NAT	311 -216
	PRX	
A600	MAL	282 - 7
A620CA	♦NAT	312 - 53
A620CB	♦NAT	312 - 55
A620CC	♦NAT	312 - 57
A620CD	♦NAT	312 - 59
A620CE	♦NAT	312 - 61

TYPE No.	MFRS	Pg&Line
A620CM	♦NAT	312 - 63
A620CN	♦NAT	312 - 67
A620CS	♦NAT	312 - 65
A620CT	♦NAT	405 - 12
A620DA	♦NAT	408 -125
A620DC	♦NAT	410 -155
A620DD	♦NAT	411 -210
A620DP	♦NAT	405 -161
A620LP	♦NAT	312 - 51
A620PC	♦NAT	409 - 33
A621A	♦NAT	313 - 32
A621B	♦NAT	313 - 34
A621C	♦NAT	313 - 36
A621D	♦NAT	313 - 39
A621E	♦NAT	313 - 41
A621M	♦NAT	313 - 43
A621N	♦NAT	313 - 48
A621P	♦NAT	405 - 44
A621PA	♦NAT	405 -181
A621PB	♦NAT	408 -158
A621S	♦NAT	313 - 46
A621T	♦NAT	313 - 51
A641L	♦NAT	415 -214
A641LA	♦NAT	416 - 51
A641LB	♦NAT	416 -134
A641LC	♦NAT	416 -188
A641LD	♦NAT	417 - 74
A641LE	♦NAT	418 - 35
A641LM	♦NAT	418 -106
A641PD	♦NAT	410 -176
A641PE	♦NAT	411 -218
A641PM	♦NAT	413 -116
A641PN	♦NAT	414 -112
A641PS	♦NAT	413 -177
A641PT	♦NAT	414 -157
A696L	GESY	415 -200
A696PM	GESY	413 -104
A696PN	♦GESY	414 -100
A696PS	♦GESY	413 -169
A696PT	GESY	414 -151
A730L	♦NAT	416 - 6
A730LA	♦NAT	416 - 57
A730LB	♦NAT	416 -140
A730LC	♦NAT	416 -193
A730LD	♦NAT	417 - 81
A730P	♦NAT	405 - 39
A730PA	♦NAT	405 -179
A730PB	♦NAT	408 -154
A730PC	♦NAT	409 - 47
A730PD	♦NAT	410 -187
A730PE	♦NAT	412 - 3
A730PM	♦NAT	413 -126
A730PN	♦NAT	414 -121
A730PS	♦NAT	413 -183
A730PT	♦NAT	414 -161
A740P	♦NAT	405 - 50
A740PA	♦NAT	405 -186
A740PB	♦NAT	408 -165
A740PC	♦NAT	409 - 51
A740PD	♦NAT	413 -189
A740PE	♦NAT	414 -131
A740PM	♦NAT	414 -167
	PRX	
A740PN	♦NAT	416 - 63
	PRX	
A740PS	♦NAT	416 - 17
	PRX	
A800	MAL	282 - 91
A1000	MAL	402 - 4
AA112#B	MISI	231 -110
AA113	MISI	232 - 92
	♦SIEG	
AA114	MISI	231 -111
AA116	MISI	232 -189
	♦SIEG	
AA117	MISI	233 - 76
	♦SIEG	
AA118	MISI	231 - 79
	♦SIEG	
AA119	MISI	233 - 38
♦MULB	♦PHIN	
♦RTCF	♦SIEG	
STI	♦VALG	
AA121#B	MISI	231 - 86
AA123#B	MISI	231 - 62
AA130#B	MISI	231 - 63
AA132	MISI	233 -148
AA133	MISI	233 -149
AA135	MISI	235 - 2
AA137#B	MISI	231 -112
AA138#B	MISI	231 -113
AA139	MISI	235 -112
AA143	♦ITTG	233 -198
	MISI	
AA144	♦ITTG	233 -195
	MISI	
AAY27	SIEG	248 - 93
AAY28	♦SIEG	243 - 19
AAY43	♦SIEG	435 - 61
AAY48	MISI	244 - 86
AAY49	MISI	245 -118
AAY53	SIEG	231 - 43
AAY54	SIEG	231 - 44
AAY55	SIEG	231 - 45
AAY60	♦MULB	434 - 11
♦PHIN	♦RTCF	
	♦VALG	
AAZ15	MISI	247 - 81
♦MULB	♦PHIN	
♦RTCF	♦VALG	
AAZ17	MISI	246 -166
♦MULB	♦PHIN	
♦RTCF	♦VALG	

TYPE No.	MFRS	Pg&Line
AAZ18	MISI	244 -166
♦MULB	♦PHIN	
♦RTCF	♦VALG	
AD110A	USSR	231 -114
AD516A	USSR	242 -160
AD516B	USSR	242 -161
AD-29	SAKJ	282 -103
AE1A	♦DII	283 -109
AE1B	♦DII	283 -164
AE1C	♦DII	284 - 12
AE1D	♦DII	284 -120
AE1E	♦DII	285 - 3
AE1F	♦DII	285 - 77
AE1G	♦DII	402 - 78
AE3A	♦DII	287 -201
AE3B	♦DII	288 - 41
AE3C	♦DII	288 -121
AE3D	♦DII	288 -219
AE3E	♦DII	289 - 81
AE3F	♦DII	289 -149
AE3G	♦DII	402 -182
AF68-3	♦DIT	293 - 62
AGP15-200	♦GIC	283 -219
AGP15-400	♦GIC	284 -106
AGP15-600	♦GIC	284 -207
AGP15-800	♦GIC	285 - 65
AP3.3A,B	♦APD	166 - 66
AP3.6A,B	♦APD	167 - 31
AP3.9A,B	♦APD	168 - 10
AP4.3A,B	♦APD	169 - 31
AP4.7A,B	♦APD	170 - 82
AP5.1A,B	♦APD	171 -161
AP5.6A,B	♦APD	173 - 44
AP6.0A,B	♦APD	174 - 17
AP6.2A,B	♦APD	175 -106
AP6.8A,B	♦APD	178 - 83
AP7.5A,B	♦APD	180 - 77
AP8.2A,B	♦APD	182 - 61
AP9.1A,B	♦APD	184 - 92
AP10.0A,B	♦APD	187 -147
AP11.0A,B	♦APD	189 - 68
AP12.0A,B	♦APD	191 - 31
AP13.0A,B	♦APD	192 -201
AP14.0A,B	♦APD	194 - 4
AP15.0A,B	♦APD	195 - 50
AP16.0A,B	♦APD	196 -145
AP17.0A,B	♦APD	197 -128
AP18.0A,B	♦APD	198 -161
AP19.0A,B	♦APD	199 -140
AP20.0A,B	♦APD	200 -154
AP22.0A,B	♦APD	202 - 52
AP24.0A,B	♦APD	203 -150
AP26.0A,B	♦APD	227 -100
AP28.0A,B	♦APD	206 - 52
AP30.0A,B	♦APD	207 - 14
AP33.0A,B	♦APD	208 -107
AP36.0A,B	♦APD	209 -173
AP39.0A,B	♦APD	211 - 10
AP2361	APD	446 - 35
AP3897	APD	446 - 36
AP3898	APD	445 - 9
AP4156	APD	446 - 37
AP4157	APD	446 - 38
AP4829	APD	446 - 39
AP4830	APD	446 - 40
AP5179	APD	446 - 41
AP5317	APD	246 -184
APD3.3A,B	♦APD	166 - 73
APD3.6A,B	♦APD	167 - 38
APD3.9A,B	♦APD	168 - 18
APD4.3A,B	♦APD	169 - 40
APD4.7A,B	♦APD	170 - 93
APD5.1A,B	♦APD	171 -174
APD5.6A,B	♦APD	173 - 58
APD6.2A,B	♦APD	175 -121
APD6.8A,B	♦APD	178 -103
APD7.5A,B	♦APD	180 - 96
APD8.2A,B	♦APD	182 - 81
APD9.1A,B	♦APD	185 -112
APD10.0A,B	♦APD	188 - 99
APD11.0A,B	♦APD	189 - 83
APD12.0A,B	♦APD	191 - 50
APD13.0A,B	♦APD	193 - 3
APD15.0A,B	♦APD	195 - 51
APD16.0A,B	♦APD	196 -146
APD18.0A,B	♦APD	198 -162
APD20.0A,B	♦APD	200 -155
APD22.0A,B	♦APD	202 - 53
APD24.0A,B	♦APD	203 -151
APD27.0A,B	♦APD	205 - 89
APD30.0A,B	♦APD	207 - 15
APD33.0A,B	♦APD	208 -108
APD36.0A,B	♦APD	209 -174
APD39.0A,B	♦APD	211 - 11
APD103	♦APD	163 - 18
APD200	APD	446 - 42
APD203	♦APD	163 - 66
APD300	APD	445 - 10
APD303	♦APD	163 -103
APD400	APD	445 - 11
APD3595	♦APD	231 -209
AR25A	♦GIC	298 -124
AR25B	♦GIC	298 -158
AR25D	♦GIC	298 -218
AR25F	GIC	299 - 22
AR25G	♦GIC	299 - 71
AR25H	GIC	299 - 95
AR25J	♦GIC	299 -132
AR25K	♦GIC	299 -169
AR25M	♦GIC	403 -142
AR402P01	ASGI	311 -147
AR402P02	ASGI	311 -149
AR402P03	ASGI	311 -151
AR402P04	ASGI	311 -153

TYPE No.	MFRS	Pg&Line
AR402P05	ASGI	311 -155
AR402P06	ASGI	311 -157
AR402P07	ASGI	311 -159
AR402P08	ASGI	311 -161
AR402P09	ASGI	311 -163
AR402P10	ASGI	404 -208
AR402P11	ASGI	405 -148
AR402P12	ASGI	408 - 91
AR402S01	ASGI	311 -148
AR402S02	ASGI	311 -150
AR402S03	ASGI	311 -152
AR402S04	ASGI	311 -154
AR402S05	ASGI	311 -156
AR402S06	ASGI	311 -158
AR402S07	ASGI	311 -160
AR402S08	ASGI	311 -162
AR402S09	ASGI	311 -164
AR402S10	ASGI	404 -209
AR402S11	ASGI	405 -149
AR402S12	ASGI	408 - 92
AR904P02	♦ASGI	312 -126
AR904P03	♦ASGI	312 -129
AR904P04	♦ASGI	312 -132
AR904P05	♦ASGI	312 -135
AR904P06	♦ASGI	312 -138
AR904P07	♦ASGI	312 -141
AR904P08	♦ASGI	312 -144
AR904P09	♦ASGI	312 -147
AR904P10	♦ASGI	405 - 23
AR904P11	♦ASGI	405 -170
AR904P12	♦ASGI	408 -138
AR904P13	♦ASGI	409 - 38
AR904P14	♦ASGI	410 -168
AR904P15	♦ASGI	411 -215
AR904P16	♦ASGI	413 -111
AR904P17	♦ASGI	413 -173
AR904P18	♦ASGI	414 -107
AR904P19	♦ASGI	414 -155
AR904P20	♦ASGI	415 -208
AR904P21	♦ASGI	416 - 48
AR904P22	♦ASGI	416 -130
AR904P23	♦ASGI	416 -185
AR904P24	♦ASGI	417 - 68
AR904P25	♦ASGI	418 - 31
AR904P26	♦ASGI	418 - 99
AR904P27	♦ASGI	418 -138
AR904P28	♦ASGI	418 -207
AR904P29	♦ASGI	419 - 29
AR904S02	♦ASGI	312 -127
AR904S03	♦ASGI	312 -130
AR904S04	♦ASGI	312 -133
AR904S05	♦ASGI	312 -136
AR904S06	♦ASGI	312 -139
AR904S07	♦ASGI	312 -142
AR904S08	♦ASGI	312 -145
AR904S09	♦ASGI	312 -148
AR904S10	♦ASGI	405 - 24
AR904S11	♦ASGI	405 -171
AR904S12	♦ASGI	408 -139
AR904S13	♦ASGI	409 - 39
AR904S14	♦ASGI	410 -169
AR904S15	♦ASGI	411 -216
AR904S16	♦ASGI	413 -112
AR904S17	♦ASGI	413 -174
AR904S18	♦ASGI	414 -108
AR904S19	♦ASGI	414 -156
AR904S20	♦ASGI	415 -209
AR904S21	♦ASGI	416 - 49
AR904S22	♦ASGI	416 -131
AR904S23	♦ASGI	416 -186
AR904S24	♦ASGI	417 - 69
AR904S25	♦ASGI	418 - 32
AR904S26	♦ASGI	418 -100
AR904S27	♦ASGI	418 -139
AR904S28	♦ASGI	418 -208
AR904S29	♦ASGI	419 - 30
AR912P25	♦ASGI	418 - 2
AR912P26	♦ASGI	418 - 77
AR912P27	♦ASGI	418 -123
AR912P28	♦ASGI	418 -184
AR912P29	♦ASGI	419 - 15
AR912P30	♦ASGI	419 -203
AR912P31	♦ASGI	420 - 33
AR912P32	♦ASGI	420 - 85
AR912P33	♦ASGI	420 -118
AR912P34	♦ASGI	420 -151
AR912P35	♦ASGI	420 -203
AR912P36	♦ASGI	421 - 36
AR912P37	♦ASGI	421 - 63
AR912P38	♦ASGI	421 - 97
AR912P39	♦ASGI	421 -113
AR912P40	♦ASGI	422 - 66
AR912P41	♦ASGI	422 - 91
AR912P42	♦ASGI	422 -122
AR912P43	♦ASGI	422 -137
AR912P44	♦ASGI	422 -169
AR912P45	♦ASGI	422 -214
AR912P46	♦ASGI	423 - 12
AR912P47	♦ASGI	423 - 16
AR912P48	♦ASGI	423 - 45
AR912P49	♦ASGI	423 - 54
AR912P50	♦ASGI	424 - 63
AR912P51	♦ASGI	424 - 70
AR912P52	♦ASGI	424 - 75
AR912P53	♦ASGI	424 - 80
AR912P54	♦ASGI	424 - 85
AR912P55	♦ASGI	424 -108
AR912P56	♦ASGI	424 -114
AR912S25	♦ASGI	418 - 3
AR912S26	♦ASGI	418 - 78
AR912S27	♦ASGI	418 -124
AR912S28	♦ASGI	418 -185
AR912S29	♦ASGI	419 - 16
AR912S30	♦ASGI	419 -204

TYPE No.	MFRS	Pg&Line
AR912S31	♦ASGI	420 - 34
AR912S32	♦ASGI	420 - 86
AR912S33	♦ASGI	420 -119
AR912S34	♦ASGI	420 -152
AR912S35	♦ASGI	420 -204
AR912S36	♦ASGI	421 - 37
AR912S37	♦ASGI	421 - 64
AR912S38	♦ASGI	421 - 98
AR912S39	♦ASGI	421 -114
AR912S40	♦ASGI	422 - 67
AR912S41	♦ASGI	422 - 92
AR912S42	♦ASGI	422 -123
AR912S43	♦ASGI	422 -138
AR912S44	♦ASGI	422 -170
AR912S45	♦ASGI	422 -215
AR912S46	♦ASGI	423 - 13
AR912S47	♦ASGI	423 - 17
AR912S48	♦ASGI	423 - 46
AR912S49	♦ASGI	423 - 55
AR912S50	♦ASGI	424 - 64
AR912S51	♦ASGI	424 - 71
AR912S52	♦ASGI	424 - 76
AR912S53	♦ASGI	424 - 81
AR912S54	♦ASGI	424 - 86
AR912S55	♦ASGI	424 -109
AR912S56	♦ASGI	424 -115
AR1101P01	♦ASGI	313 -168
AR1101P02	♦ASGI	313 -171
AR1101P03	♦ASGI	313 -174
AR1101P04	♦ASGI	313 -176
AR1101P05	♦ASGI	313 -179
AR1101P06	♦ASGI	313 -181
AR1101P07	♦ASGI	313 -184
AR1101P08	♦ASGI	313 -186
AR1101P09	♦ASGI	313 -188
AR1101P10	♦ASGI	405 - 58
AR1101S01	♦ASGI	313 -169
AR1101S02	♦ASGI	313 -172
AR1101S03	♦ASGI	313 -175
AR1101S04	♦ASGI	313 -177
AR1101S05	♦ASGI	313 -180
AR1101S06	♦ASGI	313 -182
AR1101S07	♦ASGI	313 -185
AR1101S08	♦ASGI	313 -187
AR1101S09	♦ASGI	313 -189
AR1101S10	♦ASGI	405 - 59
AR1104P10	♦ASGI	405 - 33
AR1104P11	♦ASGI	405 -176
AR1104P12	♦ASGI	408 -147
AR1104P13	♦ASGI	409 - 43
AR1104P14	♦ASGI	410 -179
AR1104P15	♦ASGI	411 -220
AR1104P16	♦ASGI	413 -117
AR1104P17	♦ASGI	413 -179
AR1104P18	♦ASGI	414 -113
AR1104P19	♦ASGI	414 -158
AR1104P20	♦ASGI	415 -216
AR1104P21	♦ASGI	416 - 52
AR1104P22	♦ASGI	416 -135
AR1104P23	♦ASGI	416 -189
AR1104P24	♦ASGI	417 - 75
AR1104P25	♦ASGI	418 - 36
AR1104P26	♦ASGI	418 -107
AR1104P27	♦ASGI	418 -142
AR1104P28	♦ASGI	418 -213
AR1104P29	♦ASGI	419 - 34
AR1104S10	♦ASGI	405 - 34
AR1104S11	♦ASGI	405 -177
AR1104S12	♦ASGI	408 -148
AR1104S13	♦ASGI	409 - 44
AR1104S14	♦ASGI	410 -180
AR1104S15	♦ASGI	412 - 1
AR1104S16	♦ASGI	413 -118
AR1104S17	♦ASGI	413 -180
AR1104S18	♦ASGI	414 -114
AR1104S19	♦ASGI	414 -159
AR1104S20	♦ASGI	415 -217
AR1104S21	♦ASGI	416 - 53
AR1104S22	♦ASGI	416 -136
AR1104S23	♦ASGI	416 -190
AR1104S24	♦ASGI	417 - 76
AR1104S25	♦ASGI	418 - 37
AR1104S26	♦ASGI	418 -108
AR1104S27	♦ASGI	418 -143
AR1104S28	♦ASGI	418 -214
AR1104S29	♦ASGI	419 - 35
AR1107P24	♦ASGI	417 - 65
AR1107P25	♦ASGI	418 - 28
AR1107P26	♦ASGI	418 - 96
AR1107P27	♦ASGI	418 -135
AR1107P28	♦ASGI	418 -204
AR1107P29	♦ASGI	419 - 26
AR1107P30	♦ASGI	420 - 8
AR1107P31	♦ASGI	420 - 42
AR1107P32	♦ASGI	420 - 99
AR1107P33	♦ASGI	420 -125
AR1107P34	♦ASGI	420 -159
AR1107P35	♦ASGI	420 -210
AR1107P36	♦ASGI	421 - 48
AR1107S24	♦ASGI	417 - 66
AR1107S25	♦ASGI	418 - 29
AR1107S26	♦ASGI	418 - 97
AR1107S27	♦ASGI	418 -136
AR1107S28	♦ASGI	418 -205
AR1107S29	♦ASGI	419 - 27
AR1107S30	♦ASGI	420 - 9
AR1107S31	♦ASGI	420 - 43
AR1107S32	♦ASGI	420 -100
AR1107S33	♦ASGI	420 -126
AR1107S34	♦ASGI	420 -160
AR1107S35	♦ASGI	420 -211
AR1107S36	♦ASGI	421 - 49
AR1109P30	♦ASGI	420 - 2
AR1109P31	♦ASGI	420 - 38

Δ-Registered with JEDEC by this manufacturer

♦-Mfr's data sheet available in microfilm service

1. TYPE No. CROSS INDEX

IN TYPE NUMBER SEQUENCE

TYPE No.	MFRS	Pg&Line
AR1109P32	♦ASGI	420 - 92
AR1109P33	♦ASGI	420 -121
AR1109P34	♦ASGI	420 -155
AR1109P35	♦ASGI	420 -206
AR1109P36	♦ASGI	421 - 43
AR1109P37	♦ASGI	421 - 66
AR1109P38	♦ASGI	421 -101
AR1109P39	♦ASGI	421 -116
AR1109P40	♦ASGI	422 - 74
AR1109P41	♦ASGI	422 - 94
AR1109P42	♦ASGI	422 -125
AR1109P43	♦ASGI	422 -140
AR1109P44	♦ASGI	422 -176
AR1109S30	♦ASGI	420 - 3
AR1109S31	♦ASGI	420 - 39
AR1109S32	♦ASGI	420 - 93
AR1109S33	♦ASGI	420 -122
AR1109S34	♦ASGI	420 -156
AR1109S35	♦ASGI	420 -207
AR1109S36	♦ASGI	421 - 44
AR1109S37	♦ASGI	421 - 67
AR1109S38	♦ASGI	421 -102
AR1109S39	♦ASGI	421 -117
AR1109S40	♦ASGI	422 - 75
AR1109S41	♦ASGI	422 - 95
AR1109S42	♦ASGI	422 -126
AR1109S43	♦ASGI	422 -141
AR1109S44	♦ASGI	422 -177
AR2004P06	♦ASGI	313 - 70
AR2004P07	♦ASGI	313 - 72
AR2004P08	♦ASGI	313 - 74
AR2004P09	♦ASGI	313 - 76
AR2004P10	♦ASGI	405 - 48
AR2004P11	♦ASGI	405 -184
AR2004P12	♦ASGI	408 -163
AR2004P13	♦ASGI	409 - 49
AR2004P14	♦ASGI	410 -192
AR2004P15	♦ASGI	412 - 6
AR2004P16	♦ASGI	413 -134
AR2004P17	♦ASGI	413 -187
AR2004P18	♦ASGI	414 -129
AR2004P19	♦ASGI	414 -165
AR2004P20	♦ASGI	416 - 15
AR2004P21	♦ASGI	416 - 61
AR2004P22	♦ASGI	416 -150
AR2004P23	♦ASGI	416 -197
AR2004P24	♦ASGI	417 - 92
AR2004S06	♦ASGI	313 - 71
AR2004S07	♦ASGI	313 - 73
AR2004S08	♦ASGI	313 - 75
AR2004S09	♦ASGI	313 - 77
AR2004S10	♦ASGI	405 - 49
AR2004S11	♦ASGI	405 -185
AR2004S12	♦ASGI	408 -164
AR2004S13	♦ASGI	409 - 50
AR2004S14	♦ASGI	410 -193
AR2004S15	♦ASGI	412 - 7
AR2004S16	♦ASGI	413 -135
AR2004S17	♦ASGI	413 -188
AR2004S18	♦ASGI	414 -130
AR2004S19	♦ASGI	414 -166
AR2004S20	♦ASGI	416 - 16
AR2004S21	♦ASGI	416 - 62
AR2004S22	♦ASGI	416 -151
AR2004S23	♦ASGI	416 -198
AR2004S24	♦ASGI	417 - 93
AR2009P24	♦ASGI	417 - 72
AR2009P25	♦ASGI	418 - 33
AR2009P26	♦ASGI	418 -104
AR2009P27	♦ASGI	418 -140
AR2009P28	♦ASGI	418 -211
AR2009P29	♦ASGI	419 - 32
AR2009P30	♦ASGI	420 - 14
AR2009P31	♦ASGI	420 - 45
AR2009P32	♦ASGI	420 -103
AR2009P33	♦ASGI	420 -128
AR2009P34	♦ASGI	420 -162
AR2009P35	♦ASGI	420 -213
AR2009P36	♦ASGI	421 - 51
AR2009P37	♦ASGI	421 - 70
AR2009P38	♦ASGI	421 -106
AR2009P39	♦ASGI	421 -120
AR2009P40	♦ASGI	422 - 78
AR2009P41	♦ASGI	422 - 98
AR2009P42	♦ASGI	422 -129
AR2009P43	♦ASGI	422 -144
AR2009P44	♦ASGI	422 -181
AR2009S24	♦ASGI	417 - 73
AR2009S25	♦ASGI	418 - 34
AR2009S26	♦ASGI	418 -105
AR2009S27	♦ASGI	418 -141
AR2009S28	♦ASGI	418 -212
AR2009S29	♦ASGI	419 - 33
AR2009S30	♦ASGI	420 - 15
AR2009S31	♦ASGI	420 - 46
AR2009S32	♦ASGI	420 -104
AR2009S33	♦ASGI	420 -129
AR2009S34	♦ASGI	420 -163
AR2009S35	♦ASGI	420 -214
AR2009S36	♦ASGI	421 - 52
AR2009S37	♦ASGI	421 - 71
AR2009S38	♦ASGI	421 -107
AR2009S39	♦ASGI	421 -121
AR2009S40	♦ASGI	422 - 79
AR2009S41	♦ASGI	422 - 99
AR2009S42	♦ASGI	422 -130
AR2009S43	♦ASGI	422 -145
AR2009S44	♦ASGI	422 -182
AR2400	GIC	298 - 65
AR2401	GIC	298 - 67
AR2402	GIC	298 - 69
AR2404	GIC	298 - 77
AR2406	GIC	298 - 79
AR3007P16	ASGI	413 -130

TYPE No.	MFRS	Pg&Line
AR3007P17	ASGI	413 -185
AR3007P18	ASGI	414 -125
AR3007P19	ASGI	414 -163
AR3007P20	♦ASGI	416 - 9
AR3007P21	ASGI	416 - 59
AR3007P22	ASGI	416 -145
AR3007P23	ASGI	416 -195
AR3007P24	ASGI	417 - 87
AR3007P25	ASGI	418 - 47
AR3007P26	ASGI	418 -113
AR3007P27	ASGI	418 -146
AR3007P28	ASGI	419 - 1
AR3007P29	ASGI	419 - 38
AR3007P30	ASGI	420 - 21
AR3007S16	ASGI	413 -131
AR3007S17	ASGI	413 -186
AR3007S18	ASGI	414 -126
AR3007S19	ASGI	414 -164
AR3007S20	ASGI	416 - 10
AR3007S21	ASGI	416 - 60
AR3007S22	ASGI	416 -146
AR3007S23	ASGI	416 -196
AR3007S24	ASGI	417 - 88
AR3007S25	ASGI	418 - 48
AR3007S26	ASGI	418 -114
AR3007S27	ASGI	418 -147
AR3007S28	ASGI	419 - 2
AR3007S29	ASGI	419 - 39
AR3007S30	ASGI	420 - 22
ARF612P01	ASGI	263 -210
ARF612P02	ASGI	263 -213
ARF612P03	ASGI	263 -216
ARF612P04	ASGI	263 -219
ARF612P05	ASGI	264 - 4
ARF612P06	ASGI	264 - 8
ARF612P07	ASGI	264 - 9
ARF612P08	ASGI	264 - 15
ARF612P09	ASGI	264 - 20
ARF612P10	ASGI	264 - 23
ARF612P11	ASGI	264 - 27
ARF612P12	ASGI	264 - 31
ARF612P13	ASGI	264 - 35
ARF612P14	ASGI	264 - 37
ARF612P15	ASGI	264 - 40
ARF612S01	ASGI	263 -211
ARF612S02	ASGI	263 -214
ARF612S03	ASGI	263 -217
ARF612S04	ASGI	264 - 1
ARF612S05	ASGI	264 - 5
ARF612S06	ASGI	264 - 10
ARF612S07	ASGI	264 - 13
ARF612S08	ASGI	264 - 16
ARF612S09	ASGI	264 - 21
ARF612S10	ASGI	264 - 24
ARF612S11	ASGI	264 - 28
ARF612S12	ASGI	264 - 32
ARF612S13	ASGI	264 - 36
ARF612S14	ASGI	264 - 38
ARF612S15	ASGI	264 - 41
ARF912P01	♦ASGI	265 - 54
ARF912P02	♦ASGI	265 - 56
ARF912P03	♦ASGI	265 - 58
ARF912P04	♦ASGI	265 - 60
ARF912P05	♦ASGI	265 - 62
ARF912P06	♦ASGI	265 - 64
ARF912P07	♦ASGI	265 - 66
ARF912P08	♦ASGI	265 - 68
ARF912P09	♦ASGI	265 - 70
ARF912P10	♦ASGI	265 - 72
ARF912P11	♦ASGI	265 - 74
ARF912P12	♦ASGI	265 - 76
ARF912P13	♦ASGI	265 - 78
ARF912P14	♦ASGI	265 - 80
ARF912P15	♦ASGI	265 - 82
ARF912P17	♦ASGI	265 - 85
ARF912P18	♦ASGI	265 - 87
ARF912P19	♦ASGI	265 - 89
ARF912P20	♦ASGI	265 - 91
ARF912P21	♦ASGI	265 - 93
ARF912P22	♦ASGI	265 - 95
ARF912P23	♦ASGI	265 - 97
ARF912P24	♦ASGI	265 - 99
ARF912P25	♦ASGI	265 -101
ARF912P26	♦ASGI	265 -103
ARF912S01	♦ASGI	265 - 55
ARF912S02	♦ASGI	265 - 57
ARF912S03	♦ASGI	265 - 59
ARF912S04	♦ASGI	265 - 61
ARF912S05	♦ASGI	265 - 63
ARF912S06	♦ASGI	265 - 65
ARF912S07	♦ASGI	265 - 67
ARF912S08	♦ASGI	265 - 69
ARF912S09	♦ASGI	265 - 71
ARF912S10	♦ASGI	265 - 73
ARF912S11	♦ASGI	265 - 75
ARF912S12	♦ASGI	265 - 77
ARF912S13	♦ASGI	265 - 79
ARF912S14	♦ASGI	265 - 81
ARF912S15	♦ASGI	265 - 83
ARF912S16	♦ASGI	265 - 84
ARF912S17	♦ASGI	265 - 86
ARF912S18	♦ASGI	265 - 88
ARF912S19	♦ASGI	265 - 90
ARF912S20	♦ASGI	265 - 92
ARF912S21	♦ASGI	265 - 94
ARF912S22	♦ASGI	265 - 96
ARF912S23	♦ASGI	265 - 98
ARF912S24	♦ASGI	265 -100
ARF912S25	♦ASGI	265 -102
ARF912S26	♦ASGI	265 -104
ARF2012P01	♦ASGI	267 -149
ARF2012P02	♦ASGI	267 -152
ARF2012P03	♦ASGI	267 -156
ARF2012P04#	♦ASGI	267 -160

TYPE No.	MFRS	Pg&Line
ARF2012P05	♦ASGI	267 -164
ARF2012P06	♦ASGI	268 - 4
ARF2012P07	♦ASGI	268 - 8
ARF2012P08	♦ASGI	268 - 12
ARF2012P09	♦ASGI	268 - 16
ARF2012P10	♦ASGI	268 - 20
ARF2012P11	♦ASGI	268 - 24
ARF2012P12	♦ASGI	268 - 28
ARF2012P13	♦ASGI	268 - 31
ARF2012P14	♦ASGI	268 - 35
ARF2012P15	♦ASGI	268 - 39
ARF2012P16	♦ASGI	268 - 43
ARF2012P17	♦ASGI	268 - 48
ARF2012P18	♦ASGI	268 - 50
ARF2012P19	♦ASGI	268 - 55
ARF2012P20	♦ASGI	268 - 57
ARF2012P21	♦ASGI	268 - 62
ARF2012P22	♦ASGI	268 - 65
ARF2012P23	♦ASGI	268 - 69
ARF2012P24	♦ASGI	268 - 71
ARF2012P25	♦ASGI	268 - 73
ARF2012P26	♦ASGI	268 - 79
ARF2012S01	♦ASGI	267 -150
ARF2012S02	♦ASGI	267 -153
ARF2012S03	♦ASGI	267 -157
ARF2012S04	♦ASGI	267 -161
ARF2012S05	♦ASGI	268 - 1
ARF2012S06	♦ASGI	268 - 5
ARF2012S07	♦ASGI	268 - 9
ARF2012S08	♦ASGI	268 - 13
ARF2012S09	♦ASGI	268 - 17
ARF2012S10	♦ASGI	268 - 21
ARF2012S11	♦ASGI	268 - 25
ARF2012S12	♦ASGI	268 - 29
ARF2012S13	♦ASGI	268 - 32
ARF2012S14	♦ASGI	268 - 36
ARF2012S15	♦ASGI	268 - 40
ARF2012S16	♦ASGI	268 - 44
ARF2012S17	♦ASGI	268 - 49
ARF2012S18	♦ASGI	268 - 51
ARF2012S19	♦ASGI	268 - 56
ARF2012S20	♦ASGI	268 - 58
ARF2012S21	♦ASGI	268 - 63
ARF2012S22	♦ASGI	268 - 66
ARF2012S23	♦ASGI	268 - 70
ARF2012S24	♦ASGI	268 - 72
ARF2012S25	♦ASGI	268 - 74
ARF2012S26	♦ASGI	268 - 80
ARS25A	GIC	298 -125
ARS25B	GIC	298 -159
ARS25D	GIC	298 -219
ARS25G	GIC	299 - 72
ARS25J	GIC	299 -133
ARS25K	GIC	299 -170
ARS25M	GIC	403 -143
AS3A	♦DII	287 -182
AS3B	♦DII	288 - 20
AS3C	♦DII	288 - 97
AS3D	♦DII	288 -196
AS3E	♦DII	289 - 63
AS3F	♦DII	289 -133
ASZ10	♦SELI	187 -170
ASZ12	♦SELI	191 - 51
ASZ15	♦SELI	195 - 52
AU01-07	♦HITJ	179 - 27
AU01-08	♦HITJ	182 -162
AU01-09	♦HITJ	184 - 97
AU01-10	♦HITJ	188 - 62
AU01-11	♦HITJ	189 -173
AU01-12	♦HITJ	191 -148
AU01-13	♦HITJ	193 -130
AU01-15	♦HITJ	194 - 83
AU01-16	♦HITJ	197 - 66
AU01-18	♦HITJ	199 - 45
AU01-20	♦HITJ	201 - 38
AU01-22	♦HITJ	202 -179
AU01-24	♦HITJ	204 - 64
AU01-27	♦HITJ	205 -186
AU01-30	♦HITJ	207 -110
AU01-33	♦HITJ	208 -203
AW01-06	♦HITJ	174 - 21
AW01-07	♦HITJ	179 - 24
AW01-08	♦HITJ	182 -103
AW01-09	♦HITJ	184 - 95
AW01-10	♦HITJ	187 -197
AW01-11	♦HITJ	189 - 84
AW01-12	♦HITJ	191 - 52
AW01-13	♦HITJ	193 -126
AW01-15	♦HITJ	194 - 82
AW01-16	♦HITJ	197 - 64
AW01-18	♦HITJ	198 - 2
AW01-20	♦HITJ	200 -175
AW01-22	♦HITJ	202 - 76
AW01-24	♦HITJ	204 - 73
AW01-27	♦HITJ	205 -112
AW01-30	♦HITJ	207 - 38
AW01-33	♦HITJ	208 -131
AW03-02	HITJ	163 -148
AW03-03	HITJ	165 -139
AW03-04	HITJ	168 - 87
AW03-05	HITJ	171 - 14
AW08-7.5A	♦HITJ	180 -118
AW08-7.5B	♦HITJ	180 -117
AW08-8.2A	♦HITJ	182 -105
AW08-8.2B	♦HITJ	182 -102
AW08-9.1A	♦HITJ	185 -136
AW08-9.1B	♦HITJ	185 -135
AW08-10A	♦HITJ	187 -199
AW08-10B	♦HITJ	187 -196
AW08-11A	♦HITJ	189 -108
AW08-11B	♦HITJ	189 -107
AW08-12A	♦HITJ	191 - 78
AW08-12B	♦HITJ	191 - 77
AW08-13A	♦HITJ	193 - 26

TYPE No.	MFRS	Pg&Line
AW08-13B	♦HITJ	193 - 25
AW08-15A	♦HITJ	195 - 76
AW08-15B	♦HITJ	195 - 75
AW08-16A	♦HITJ	196 -169
AW08-16B	♦HITJ	196 -168
AW08-18A	♦HITJ	198 -185
AW08-18B	♦HITJ	198 -184
AW08-20A	♦HITJ	200 -177
AW08-20B	♦HITJ	200 -174
AW08-22A	♦HITJ	202 - 77
AW08-22B	♦HITJ	202 - 75
AW08-24A	♦HITJ	203 -174
AW08-24B	♦HITJ	203 -173
AW08-27A	♦HITJ	205 -114
AW08-27B	♦HITJ	205 -111
AW08-30A	♦HITJ	207 - 39
AW08-30B	♦HITJ	207 - 36
AW08-33A	♦HITJ	208 -133
AW08-33B	♦HITJ	208 -130
B1A1	EDL	275 - 36
B1A5	EDL	275 - 37
B1A9	EDL	275 - 38
B1B1	EDL	275 - 52
B1B5	EDL	275 - 53
B1B9	EDL	275 - 54
B1C1	EDL	275 - 72
B1C5	EDL	275 - 73
B1C9	EDL	275 - 74
B1D1	EDL	275 - 90
B1D5	EDL	275 - 91
B1D9	EDL	275 - 92
B1E1	EDL	275 -106
B1E5	EDL	275 -107
B1E9	EDL	275 -108
B1F1	EDL	275 -120
B1F5	EDL	275 -121
B1F9	EDL	275 -122
B1G1	EDL	275 -132
B1G5	EDL	275 -133
B1G9	EDL	275 -134
B1H1	EDL	275 -143
B1H5	EDL	275 -144
B1H9	EDL	275 -145
B1K1	EDL	275 -152
B1K5	EDL	275 -153
B1K9	EDL	275 -154
B1M1	EDL	401 - 48
B1M5	EDL	401 - 49
B1M9	EDL	401 - 50
B1N1	EDL	405 -202
B1N5	EDL	405 -203
B1N9	EDL	405 -204
B2A1	EDL	277 - 80
B2A5	EDL	277 - 81
B2A9	EDL	277 - 82
B2B1	EDL	277 - 94
B2B5	EDL	277 - 95
B2B9	EDL	277 - 96
B2C1	EDL	277 -109
B2C5	EDL	277 -110
B2C9	EDL	277 -111
B2D1	EDL	277 -124
B2D5	EDL	277 -125
B2D9	EDL	277 -126
B2D914	♦RTN	246 - 93
	♦UNI	
B2D914F	♦RTN	245 -212
B2D914T	♦RTN	245 -213
B2D3600	♦RTN	245 -153
B2D3600F	♦RTN	245 -160
B2D3600T	♦RTN	245 -161
B2D4148	♦RTN	246 -150
B2D4148F	♦RTN	246 -151
B2D4148T	♦RTN	246 -152
B2E1	EDL	277 -134
B2E5	EDL	277 -135
B2E9	EDL	277 -136
B2F1	EDL	277 -152
B2F5	EDL	277 -153
B2F9	EDL	277 -154
B2G1	EDL	277 -162
B2G5	EDL	277 -163
B2G9	EDL	277 -164
B2H1	EDL	277 -177
B2H5	EDL	277 -178
B2H9	EDL	277 -179
B2K1	EDL	277 -184
B2K5	EDL	277 -185
B2K9	EDL	277 -186
B2M1	EDL	401 -101
B2M5	EDL	401 -102
B2M9	EDL	401 -103
B2N1	EDL	406 - 6
B2N5	EDL	406 - 7
B2N9	EDL	406 - 8
B3A1	EDL	277 -201
B3A5	EDL	277 -202
B3A9	EDL	277 -203
B3B1	EDL	278 - 9
B3B5	EDL	278 - 10
B3B9	EDL	278 - 11
B3C1	EDL	278 - 48
B3C5	EDL	278 - 49
B3C9	EDL	278 - 50
B3D1	EDL	278 - 95
B3D5	EDL	278 - 96
B3D9	EDL	278 - 97
B3D914	♦UNI	246 - 94
B3D3600	♦UNI	245 -154
B3E1	EDL	278 -129
B3E5	EDL	278 -130
B3E9	EDL	278 -131
B3F1	EDL	278 -170
B3F5	EDL	278 -171

TYPE No.	MFRS	Pg&Line
B3F9	EDL	278 -172
B3G1	EDL	278 -200
B3G5	EDL	278 -201
B3G9	EDL	278 -202
B3H1	EDL	279 - 21
B3H5	EDL	279 - 22
B3H9	EDL	279 - 23
B3K1	EDL	279 - 35
B3K5	EDL	279 - 36
B3K9	EDL	279 - 37
B3M1	EDL	401 -116
B3M5	EDL	401 -117
B3M9	EDL	401 -118
B3N1	EDL	406 - 18
B3N5	EDL	406 - 19
B3N9	EDL	406 - 20
B4A1	EDL	279 -132
B4A5	EDL	279 -133
B4A9	EDL	279 -134
B4B1	EDL	279 -138
B4B5	EDL	279 -139
B4B9	EDL	279 -140
B4C1	EDL	279 -145
B4C5	EDL	279 -146
B4C9	EDL	279 -147
B4D1	EDL	279 -151
B4D5	EDL	279 -152
B4D9	EDL	279 -153
B4E1	EDL	279 -158
B4E5	EDL	279 -159
B4E9	EDL	279 -160
B4F1	EDL	279 -164
B4F5	EDL	279 -165
B4F9	EDL	279 -166
B4G1	EDL	279 -170
B4G5	EDL	279 -171
B4G9	EDL	279 -172
B4H1	EDL	279 -177
B4H5	EDL	279 -178
B4H9	EDL	279 -179
B4K1	EDL	279 -183
B4K5	EDL	279 -184
B4K9	EDL	279 -185
B4M1	EDL	401 -143
B4M5	EDL	401 -144
B4M9	EDL	401 -145
B4N1	EDL	406 - 33
B4N5	EDL	406 - 34
B4N9	EDL	406 - 35
B5A1	EDL	279 -211
B5A5	EDL	279 -212
B5A9	EDL	279 -213
B5B1	EDL	280 - 53
B5B5	EDL	280 - 54
B5B9	EDL	280 - 55
B5C1	EDL	280 -141
B5C5	EDL	280 -142
B5C9	EDL	280 -143
B5D1	EDL	281 - 12
B5D5	EDL	281 - 13
B5D9	EDL	281 - 14
B5E1	EDL	281 - 48
B5E5	EDL	281 - 49
B5E9	EDL	281 - 50
B5F1	EDL	281 -137
B5F5	EDL	281 -138
B5F9	EDL	281 -139
B5G1	EDL	281 -165
B5G5	EDL	281 -166
B5G9	EDL	281 -167
B5H1	EDL	282 - 20
B5H5	EDL	282 - 21
B5H9	EDL	282 - 22
B5K1	EDL	282 - 39
B5K5	EDL	282 - 40
B5K9	EDL	282 - 41
B5M1	EDL	401 -162
B5M5	EDL	401 -163
B5M9	EDL	401 -164
B5N1	EDL	406 - 45
B5N5	EDL	406 - 46
B5N9	EDL	406 - 47
B6A1	EDL	282 -153
B6A5	EDL	282 -154
B6A9	EDL	282 -155
B6B1	EDL	282 -160
B6B5	EDL	282 -161
B6B9	EDL	282 -162
B6C1	EDL	282 -170
B6C5	EDL	282 -171
B6C9	EDL	282 -172
B6D1	EDL	282 -183
B6D5	EDL	282 -184
B6D9	EDL	282 -185
B6E1	EDL	282 -192
B6E5	EDL	282 -193
B6E9	EDL	282 -194
B6F1	EDL	282 -203
B6F5	EDL	282 -204
B6F9	EDL	282 -205
B6G1	EDL	282 -211
B6G5	EDL	282 -212
B6G9	EDL	282 -213
B6H1	EDL	283 - 6
B6H5	EDL	283 - 7
B6H9	EDL	283 - 8
B6K1	EDL	283 - 13
B6K5	EDL	283 - 14
B6K9	EDL	283 - 15
B6M1	EDL	402 - 20
B6M5	EDL	402 - 21
B6M9	EDL	402 - 22
B6N1	EDL	406 - 67
B6N5	EDL	406 - 68

Δ-Registered with JEDEC by this manufacturer

♦-Mfr's data sheet available in microfilm service

1. TYPE No. CROSS INDEX

IN TYPE NUMBER SEQUENCE

TYPE No.	MFRS	Pg&Line
B6N9	EDL	406 - 69
B7A1	EDL	283 - 76
B7A5	EDL	283 - 77
B7A9	EDL	283 - 78
B7B1	EDL	283 -125
B7B5	EDL	283 -126
B7B9	EDL	283 -127
B7C1	EDL	283 -188
B7C5	EDL	283 -189
B7C9	EDL	283 -190
B7D1	EDL	284 - 36
B7D5	EDL	284 - 37
B7D9	EDL	284 - 38
B7E1	EDL	284 - 76
B7E5	EDL	284 - 77
B7E9	EDL	284 - 78
B7F1	EDL	284 -141
B7F5	EDL	284 -142
B7F9	EDL	284 -143
B7G1	EDL	284 -178
B7G5	EDL	284 -179
B7G9	EDL	284 -180
B7H1	EDL	285 - 20
B7H5	EDL	285 - 21
B7H9	EDL	285 - 22
B7K1	EDL	285 - 41
B7K5	EDL	285 - 42
B7K9	EDL	285 - 43
B7M1	EDL	402 - 42
B7M5	EDL	402 - 43
B7M9	EDL	402 - 44
B7N1	EDL	406 - 89
B7N5	EDL	406 - 90
B7N9	EDL	406 - 91
B8A5	EDL	285 -208
B8B5	EDL	286 - 24
B8C5	EDL	286 - 65
B8D5	EDL	286 - 90
B8E5	EDL	286 -115
B8F5	EDL	286 -139
B8G5	EDL	286 -163
B8H5	EDL	286 -181
B8K5	EDL	286 -200
B8M5	EDL	402 -110
B8N5	EDL	406 -103
B40C800	♦AEGG	280 - 66
	♦FGRS	360 - 6
B40C800D	♦AEGG	360 - 69
B40C800D1	♦AEGG	360 - 70
B40C800W	MEHK	360 - 59
B40C1000	♦AEGG	282 -163
	♦FGRS	361 -100
B40C1000W	MEHK	360 -110
B40C1200S	MEHK	361 - 78
B40C1200W	MEHK	361 - 79
B40C1500	♦AEGG	362 -142
B40C1500/1000		361 - 80
	♦FGRS	
B40C1500/1000Si		361 - 81
	♦AEGG	
B40C1500/1000SiC		361 - 82
	♦AEGG	
B40C1500R	♦FGRS	285 - 99
B40C1500W	MEHK	361 -153
B40C2000/1500		362 -132
	♦FGRS	
B40C3700/2200		364 - 57
	♦FGRS	
B40C3700/2200Si		364 - 58
	♦AEGG	
B40C3700/2200SiC		364 - 59
	♦AEGG	
B40C5000/3300		365 - 31
	♦FGRS	
B40C5000/3300Si		365 - 32
	♦AEGG	
B60C800W	MEHK	360 - 60
B60C1000W	MEHK	360 -139
B60C1200S	MEHK	361 - 88
B60C1200W	MEHK	361 - 89
B60C1500W	MEHK	361 -179
B70H40	♦INR	300 -169
B70H60	♦INR	300 -171
B70H80	♦INR	300 -173
B70H100	♦INR	403 -165
B80C800	♦AEGG	279 - 78
	♦FGRS	360 - 7
B80C800D	♦AEGG	360 - 71
B80C800D1	♦AEGG	360 - 72
B80C800W	MEHK	360 -142
B80C1000	♦AEGG	282 -173
	♦FGRS	361 -101
B80C1000W	MEHK	360 -143
B80C1200S	MEHK	361 - 90
B80C1200W	MEHK	361 - 91
B80C1500	♦AEGG	362 -143
B80C1500/1000		361 - 95
	♦FGRS	
B80C1500/1000Si		361 - 92
	♦AEGG	
B80C1500/1000SiC		361 - 96
	♦AEGG	
B80C1500R	♦FGRS	285 -116
B80C1500W	MEHK	361 -180
B80C2000/1500		362 -135
	♦FGRS	
B80C3700/2200		364 - 67
	♦FGRS	
B80C3700/2200Si		364 - 64
	♦AEGG	
B80C3700/2200SiC		364 - 68
	♦AEGG	
B80C5000/3300		365 - 54
	♦FGRS	

TYPE No.	MFRS	Pg&Line
B80C5000/3300Si		365 - 46
	♦AEGG	
B125C800	♦AEGG	281 - 15
	♦FGRS	360 - 73
B125C800D	♦AEGG	360 - 75
B125C800D1	♦AEGG	360 - 76
B125C800W	MEHK	360 - 61
B125C1000	♦AEGG	282 -186
	♦FGRS	361 -102
B125C1000W	MEHK	360 -178
B125C1200S	MEHK	361 - 98
B125C1200W	MEHK	361 - 99
B125C1500	♦AEGG	362 -144
B125C1500/1000		361 -103
	♦FGRS	
B125C1500/1000SiC		
	♦AEGG	361 -104
B125C1500R	♦FGRS	285 -125
B125C1500W	MEHK	362 - 12
B125C2000/1500		362 -137
	♦FGRS	
B125C3700/2200		364 - 69
	♦FGRS	
B125C3700/2200Si		364 - 70
	♦AEGG	
B125C3700/2200SiC		
	♦AEGG	364 - 71
B125C5000/3300		365 - 68
	♦FGRS	
B125C5000/3300Si		365 - 69
	♦AEGG	
B172-5	EDL	285 -209
B172-10	EDL	286 - 25
B172-20	EDL	286 - 66
B172-30	EDL	286 - 91
B172-40	EDL	286 -116
B172-50	EDL	286 -140
B172-60	EDL	286 -164
B172-70	EDL	286 -182
B172-80	EDL	286 -201
B172-90	EDL	286 -212
B172-100	EDL	402 -111
B172-110	EDL	405 - 73
B172-120	EDL	406 -104
B223-10	♦EDL	401 -165
B223-20	♦EDL	415 - 40
B223-30	♦EDL	419 -116
B223-40	♦EDL	421 -193
B223-50	♦EDL	423 -134
B223-60	♦EDL	424 -167
B250C800	♦AEGG	279 -111
	♦FGRS	360 - 74
B250C800D	♦AEGG	360 - 77
B250C800D1	♦AEGG	360 - 78
B250C800W	MEHK	360 - 62
B250C1000	♦AEGG	282 -214
	♦FGRS	361 -105
B250C1000W	MEHK	361 - 5
B250C1200S	MEHK	361 -109
B250C1200W	MEHK	361 -110
B250C1500	♦AEGG	362 -145
B250C1500/1000		361 -112
	♦FGRS	
B250C1500/1000SiC		
	♦AEGG	361 -113
B250C1500R	♦FGRS	285 -149
B250C1500W	MEHK	362 - 53
B250C2000/1500		362 -146
	♦FGRS	
B250C3700/2200		364 - 75
	♦FGRS	
B250C3700/2200SiC		
	♦AEGG	364 - 76
B250C5000/3300		365 - 96
	♦FGRS	
B250C5000/3300Si		365 - 97
	♦AEGG	
B380C800	♦FGRS	282 -102
B380C800W	MEHK	360 - 64
B380C1000	♦FGRS	283 - 23
B380C1000W	MEHK	361 - 55
B380C1200S	MEHK	361 -116
B380C1200W	MEHK	361 -117
B380C1500/1000		361 -118
	♦FGRS	
B380C1500/1000SiC		
	♦AEGG	361 -119
B380C1500R	♦FGRS	285 -169
B380C1500W	MEHK	362 -106
B380C2000/1500		362 -149
	♦FGRS	
B380C3700/2200		364 - 79
	♦FGRS	
B380C3700/2200SiC		
	♦AEGG	364 - 80
B412-5-10	♦EDL	423 - 68
B412-5-25	EDL	423 - 76
B412-5-5	♦EDL	423 - 63
B412-7-10	♦EDL	425 - 59
B412-7-25	♦EDL	425 - 66
B412-7-5	♦EDL	425 - 56
B412-10-10	♦EDL	427 - 21
B412-10-25	♦EDL	427 - 38
B412-10-5	♦EDL	427 - 9
B412-12-10	♦EDL	428 - 40
B412-12-25	♦EDL	428 - 57
B412-12-5	♦EDL	428 - 32
B412-15-10	♦EDL	429 - 23
B412-15-25	♦EDL	429 - 31
B412-15-5	♦EDL	429 - 10
B412-20-10	♦EDL	430 -115
B412-20-25	♦EDL	430 -124
B412-20-5	♦EDL	430 -102
B412-25-10	♦EDL	431 - 89

TYPE No.	MFRS	Pg&Line
B412-25-25	♦EDL	431 - 96
B412-25-5	♦EDL	431 - 83
B412-30-10	♦EDL	432 - 32
B412-30-25	♦EDL	432 - 39
B412-30-5	♦EDL	432 - 22
B412-40-10	♦EDL	432 -162
B412-40-25	♦EDL	432 -167
B412-40-5	♦EDL	432 -157
B412-50-10	♦EDL	433 - 44
B412-50-25	♦EDL	433 - 46
B412-50-5	♦EDL	433 - 43
B427-10	♦EDL	401 - 54
B427-15	♦EDL	411 - 10
B427-20	♦EDL	414 -215
B427-25	♦EDL	417 -117
B427-30	♦EDL	419 - 83
B427-35	♦EDL	420 -175
B427-40	♦EDL	421 -162
B427-45	♦EDL	422 -188
B427-50	♦EDL	423 -107
B427-55	♦EDL	424 - 91
B427-60	♦EDL	424 -147
B427-65	♦EDL	425 - 36
B427-70	♦EDL	425 - 71
B481A2	GTN	373 - 48
B481B2	GTN	373 - 51
B481C2	GTN	373 - 53
B481D2	GTN	373 - 56
B481E2	GTN	373 - 58
B481F2	GTN	373 - 62
B482A2	GTN	373 - 49
B482B2	GTN	373 - 52
B482C2	GTN	373 - 54
B482D2	GTN	373 - 57
B482E2	GTN	373 - 59
B482F2	GTN	373 - 63
B485B2	GTN	373 - 81
B485C2	GTN	373 - 83
B485D2	GTN	373 - 84
B587-10	♦EDL	401 - 55
B587-15	♦EDL	411 - 11
B587-20	♦EDL	414 -216
B587-25	♦EDL	417 -118
B587-30	♦EDL	419 - 84
B587-35	♦EDL	420 -176
B587-40	♦EDL	421 -163
B587-45	♦EDL	422 -189
B587-50	♦EDL	423 -108
B587-55	♦EDL	424 - 92
B587-60	♦EDL	424 -148
B587-65	♦EDL	425 - 37
B587-70	♦EDL	425 - 72
B587-80	♦EDL	426 - 25
B587-85	♦EDL	426 -139
B587-90	♦EDL	426 -157
B587-95	♦EDL	426 -200
B587-100	♦EDL	427 - 50
B587-110	♦EDL	428 - 5
B587-120	♦EDL	428 - 65
B587-130	♦EDL	428 -164
B587-140	♦EDL	428 -196
B587-150	♦EDL	429 - 35
B587-160	♦EDL	429 -190
B587-170	♦EDL	430 - 16
B587-180	♦EDL	430 - 49
B587-190	♦EDL	430 - 74
B587-200	♦EDL	430 -128
B588-10	♦EDL	401 -191
B588-15	♦EDL	411 - 78
B588-20	♦EDL	415 - 41
B588-25	♦EDL	417 -144
B588-30	♦EDL	419 -120
B588-35	♦EDL	420 -191
B588-40	♦EDL	421 -197
B588-45	♦EDL	422 -205
B588-50	♦EDL	423 -139
B588-55	♦EDL	424 -100
B588-60	♦EDL	424 -171
B588-65	♦EDL	425 - 42
B588-70	♦EDL	425 - 76
B588-80	♦EDL	426 - 35
B588-85	♦EDL	426 -141
B588-90	♦EDL	426 -159
B588-95	♦EDL	426 -202
B588-100	♦EDL	427 - 62
B588-110	♦EDL	428 - 7
B588-120	♦EDL	428 - 73
B588-130	♦EDL	428 -166
B588-140	♦EDL	428 -200
B588-150	♦EDL	429 - 49
B588-160	♦EDL	429 -195
B588-170	♦EDL	430 - 18
B588-180	♦EDL	430 - 53
B588-190	♦EDL	430 - 76
B588-200	♦EDL	430 -141
B1210B60C1000-700		
	SIEG	360 -140
B1210L	BBCG	360 - 66
B1220B125C1000-700		
	SIEG	360 -179
B1220L	BBCG	360 - 67
B1240B250C1000-700		
	SIEG	361 - 6
B1240L	BBCG	360 - 68
B1280B500C1000-700		
	SIEG	361 - 57
B1280L	BBCG	401 -146
B1310B60C2300-1400		
	SIEG	364 - 10
B1310M	BBCG	362 -156
B1320B125C2300-1400		
	SIEG	364 - 11
B1320M	BBCG	362 -157

TYPE No.	MFRS	Pg&Line
B1340B250C2300-1400		
	SIEG	364 - 12
B1340M	BBCG	362 -158
B1380B500C2300-1400		
	SIEG	364 - 13
B1380M	BBCG	362 -159
B1906B40C1500-1000		
	SIEG	361 -125
B1906L	BBCG	361 - 83
B1912B80C1500-1000		
	♦SIEG	360 - 4
B1912L	BBCG	361 - 93
B2806B40C900-600		360 - 65
	SIEG	
B2812B80C900-600		360 - 5
	SIEG	
BA5A5	EDL	280 - 19
BA5B5	EDL	280 - 96
BA5C5	EDL	280 -194
BA5D5	EDL	281 - 21
BA5E5	EDL	281 - 99
BA5F5	EDL	281 -147
BA5G5	EDL	281 -212
BA5H5	EDL	282 - 24
BA5K5	EDL	282 - 76
BA5M5	EDL	401 -207
BA5N5	EDL	406 - 57
BA5P5	EDL	411 - 83
BA103	♦SIEG	231 -210
BA104	♦SIEG	232 - 6
BA105	♦SIEG	232 - 7
BA108	♦SIEG	232 - 8
BA127	♦SIEG	274 -120
BA127D	♦SIEG	238 -112
BA128	♦FSC	234 - 35
BA129	♦FSC	234 -203
BA130	♦FSC	233 -147
BA133	♦SIEG	401 - 16
BA133F	♦SIEG	237 - 55
BA145	♦MULB	236 - 81
	♦PHIN	♦RTCF
		♦VALG
BA157		BELI 247 -167
	♦FGRS	♦ITTG
	MULB	PHIN
	RTCF	♦THEF
	VALG	WAB
BA158		BELI 247 -179
	♦FGRS	♦ITTG
	MULB	PHIN
	RTCF	♦THEF
	VALG	WAB
BA159		BELI 247 -201
	♦FGRS	♦ITTG
	MULB	PHIN
	RTCF	♦THEF
	VALG	WAB
BA164	FSC	234 - 28
BA166	HSE	231 -106
BA167	HSE	244 -195
BA168	HSE	244 -113
BA170	HSE	234 -220
	♦ITTG	
BA180	♦FSC	233 -112
BA181	♦FSC	233 -113
BA182	♦MULB	234 -155
	♦PHIN	♦RTCF
	SIEG	♦VALG
BA201	♦ITTG	245 -162
BA204	♦ALGG	245 -214
BA216	♦FSC	244 - 68
BA217	♦FSC	244 -213
BA218	♦FSC	245 -163
BA219	♦FSC	249 - 62
	♦MULB	♦PHIN
	♦RTCF	♦VALG
BA220	♦APX	244 - 69
	♦MULB	♦PHIN
	♦RTCF	♦VALG
BA221	♦APX	244 -214
	HSE	♦MULB
	♦PHIN	♦RTCF
		♦VALG
BA223	♦APX	249 -141
	♦MULB	♦PHIN
	RTCF	VALG
BA223-10	♦EDL	401 -192
BA223-15	♦EDL	411 - 79
BA223-20	♦EDL	415 - 42
BA223-25	♦EDL	417 -145
BA223-30	♦EDL	419 -121
BA223-35	♦EDL	420 -192
BA223-40	♦EDL	421 -198
BA223-45	♦EDL	422 -206
BA223-50	♦EDL	423 -140
BA223-55	♦EDL	424 -101
BA223-60	♦EDL	424 -172
BA223-65	♦EDL	425 - 43
BA223-70	♦EDL	425 - 77
BA243	♦ALGG	238 - 33
	♦HITJ	♦MULB
	♦PHIN	♦RTCF
	♦SIEG	♦VALG
BA243A	♦HITJ	238 - 66
BA243S	♦SIEG	445 - 12
BA244	♦ALGG	250 - 62
	♦MULB	♦PHIN
	♦RTCF	♦SIEG
		♦VALG
BA244S	♦SIEG	445 - 13
BA280	♦MULB	439 - 99
	♦PHIN	♦VALG
BA284	SIEG	445 - 14

TYPE No.	MFRS	Pg&Line
BA315	♦APX	163 - 48
	♦MULB	♦PHIN
	RTCF	♦VALG
BA316	♦APX	244 - 70
	♦MULB	♦PHIN
	♦RTCF	♦VALG
BA317	♦APX	244 -215
	♦MULB	♦PHIN
	♦RTCF	♦VALG
BA318	♦APX	245 -164
	♦MULB	♦PHIN
	RTCF	♦VALG
BA423	MULB	249 -142
	PHIN	RTCF
		VALG
BA481	♦MULB	274 - 51
	♦PHIN	♦RTCF
		♦VALG
BA482	♦APX	238 - 67
	MULB	♦PHIN
	RTCF	VALG
BA483	♦APX	238 - 68
	♦MULB	♦PHIN
	RTCF	VALG
BA484	♦APX	438 - 83
	♦MULB	♦PHIN
	♦RTCF	VALG
BA579A	♦THEF	442 - 28
BA579C	♦THEF	442 - 29
BA579S	♦THEF	442 - 30
BA679	♦ALGG	231 -172
BA682	♦ALGG	231 -211
BA683	♦ALGG	231 -212
BAL74	♦SIEG	245 -138
BAL99	♦SIEG	246 - 53
	THEF	
BAR10	♦THEF	436 - 90
BAR11	♦THEF	436 - 91
BAR18	♦THEF	438 - 84
BAR19	♦THEF	436 - 92
BAR28	♦THEF	436 - 93
BAR42	♦THEF	245 - 10
BAR43	♦THEF	245 - 11
BAR43A	♦THEF	436 - 94
BAR43C	♦THEF	436 - 95
BAR43S	♦THEF	436 - 96
BAR74	♦SIEG	245 -139
BAR99	♦SIEG	246 - 54
BAR223-10	♦EDL	248 -140
BAR223-15	♦EDL	248 -149
BAR223-20	♦EDL	248 -160
BAR223-25	♦EDL	248 -164
BAR223-30	♦EDL	248 -168
BAR223-35	♦EDL	248 -173
BAR223-40	♦EDL	248 -176
BAR223-45	♦EDL	248 -179
BAR223-50	♦EDL	248 -181
BAR223-55	♦EDL	248 -184
BAR223-60	♦EDL	248 -186
BAR223-65	♦EDL	248 -189
BAR223-70	♦EDL	248 -191
BAS11	♦APX	251 -139
	♦MULB	♦PHIN
	♦RTCF	♦VALG
BAS15	♦MULB	245 -165
	♦PHIN	♦RTCF
		♦VALG
BAS16	♦APX	246 -142
	FERB	MULB
	♦PHIN	RTCF
	♦SIEG	THEF
		VALG
BAS17	♦APX	446 - 46
	♦MULB	♦PHIN
		VALG
BAS18	MULB	445 - 15
	PHIN	RTCF
		VALG
BAS19	♦APX	249 - 59
	♦MULB	♦PHIN
	RTCF	♦THEF
		VALG
BAS20	♦APX	249 - 86
	♦MULB	♦PHIN
	RTCF	♦THEF
		VALG
BAS21	♦APX	249 -105
	♦MULB	♦PHIN
	RTCF	♦THEF
		VALG
BAS27	♦MULB	235 -176
	♦PHIN	♦RTCF
		♦VALG
BAS28	♦MULB	236 - 7
	♦PHIN	♦RTCF
		♦VALG
BAS29	♦MULB	236 - 8
	♦PHIN	♦RTCF
		♦VALG
BAS31	♦MULB	236 - 9
	♦PHIN	♦RTCF
		♦VALG
BAS32	♦MULB	234 -201
	♦PHIN	♦RTCF
		♦VALG
BAS33	♦ALGG	231 -213
BAS34	♦ALGG	231 -214
BAS35	♦MULB	236 - 10
	♦PHIN	♦RTCF
		♦VALG
BAS40-01	♦SIEG	248 -216
BAS40-02	♦SIEG	248 -217
BAS40-03	♦SIEG	248 -218
BAS40-04	♦SIEG	248 -219

Δ-Registered with JEDEC by this manufacturer

♦-Mfr's data sheet available in microfilm service

1. TYPE No. CROSS INDEX

IN TYPE NUMBER SEQUENCE

TYPE No.	MFRS	Pg&Line
BAS40-05	♦SIEG	248 -100
BAS40-06	♦SIEG	248 -101
BAS45	♦MULB	236 - 6
♦PHIN	♦RTCF	
	♦VALG	
BAS70-01	♦SIEG	248 -220
BAS70-02	♦SIEG	249 - 1
BAS70-03	♦SIEG	249 - 2
BAS70-04	♦SIEG	438 - 85
	♦THEF	
BAS70-05	♦SIEG	438 - 86
	♦THEF	
BAS70-06	♦SIEG	438 - 87
	♦THEF	
BAT17	APX	439 -100
♦MULB	♦PHIN	
RTCF	♦THEF	
	♦VALG	
BAT17DS	♦THEF	439 - 53
BAT18	♦APX	234 -156
♦MULB	♦PHIN	
RTCF	THEF	
	♦VALG	
BAT19	♦THEF	436 - 97
BAT21E	♦FERB	314 -105
BAT21J	♦FERB	314 -106
BAT22E	FERB	314 -107
BAT22J	FERB	314 -108
BAT23G	FERB	314 - 32
BAT23H	FERB	314 - 33
BAT24G	FERB	314 - 34
BAT24H	FERB	314 - 35
BAT25E	FERB	314 -109
BAT25J	FERB	314 -110
BAT26E	FERB	315 - 1
BAT26J	FERB	315 - 2
BAT27G	FERB	314 - 36
BAT27H	FERB	314 - 37
BAT28G	FERB	314 - 38
BAT28H	FERB	314 - 39
BAT29	♦THEF	436 - 98
BAT41	♦THEF	436 - 99
BAT42	♦THEF	436 -100
BAT43	♦THEF	436 -101
BAT45	THEF	436 -102
BAT46	♦THEF	436 -103
BAT47	♦THEF	436 -104
BAT48	♦THEF	436 -105
BAT49(A)	♦THEF	236 -197
BAT81	♦APX	245 - 59
♦MULB	♦PHIN	
♦RTCF	♦VALG	
BAT82	♦APX	245 -132
♦MULB	♦PHIN	
♦RTCF	♦VALG	
BAT83	♦APX	246 - 24
♦MULB	♦PHIN	
♦RTCF	♦VALG	
BAT85	♦APX	245 - 12
♦MULB	♦PHIN	
♦RTCF	♦VALG	
BAT86	♦MULB	235 -110
♦PHIN	♦RTCF	
	♦VALG	
BAV10	♦APX	251 -135
♦MULB	♦PHIN	
♦RTCF	♦VALG	
BAV17	♦ALGG	249 - 8
♦FSC	♦ITTG	
BAV18	♦ALGG	249 - 35
♦APX	♦FSC	
♦ITTG	♦MULB	
♦PHIN	♦VALG	
BAV19	♦ALGG	249 - 77
♦APX	♦FSC	
♦ITTG	♦MULB	
♦PHIN	♦RTCF	
THEF	♦VALG	
BAV20	♦ALGG	249 -106
♦APX	♦FSC	
♦ITTG	♦MULB	
♦PHIN	♦RTCF	
THEF	♦VALG	
BAV21	♦ALGG	249 -129
♦APX	♦FSC	
♦ITTG	♦MULB	
♦PHIN	♦RTCF	
THEF	♦VALG	
BAV23	♦MULB	249 -107
♦PHIN	♦RTCF	
	♦VALG	
BAV45	♦MULB	244 -167
♦PHIN	♦RTCF	
	♦VALG	
BAV70	♦APX	271 -106
♦FERB	♦MULB	
♦PHIN	♦RTCF	
♦SIEG	SPR	
THEF	♦VALG	
BAV74	♦FERB	245 -166
♦SIEG	SPR	
	THEF	
BAV99	♦APX	271 -107
♦FERB	♦MULB	
♦PHIN	♦RTCF	
♦SIEG	THEF	
	♦VALG	
BAV100	♦ALGG	249 - 22
♦MULB	♦PHIN	
♦RTCF	♦VALG	
BAV101	♦ALGG	249 - 60
♦MULB	♦PHIN	
♦RTCF	♦VALG	

TYPE No.	MFRS	Pg&Line
BAV102	♦ALGG	249 - 87
♦MULB	♦PHIN	
♦RTCF	♦VALG	
BAV103	♦ALGG	249 -108
♦MULB	♦PHIN	
♦RTCF	♦VALG	
BAW21A	THEF	249 - 45
BAW24	♦ALGG	250 - 78
BAW25	♦ALGG	250 - 79
BAW26	♦ALGG	250 - 96
BAW27	♦ALGG	250 - 97
BAW55	THEF	251 -104
BAW56	♦APX	271 -108
♦FERB	♦MULB	
♦PHIN	♦RTCF	
♦SIEG	SPR	
THEF	♦VALG	
BAW56G	♦SIEG	314 - 4
BAW56GT	♦SIEG	314 - 5
BAW62	♦APX	246 -117
♦MULB	♦PHIN	
RTCF	♦VALG	
BAW63	♦FERB	246 - 27
BAW63A	♦FERB	244 -216
BAW63B	♦FERB	244 -114
BAW64	♦FERB	435 - 89
BAW65	♦FERB	435 - 90
BAW66	♦FERB	435 - 91
BAW67	♦FERB	435 - 92
BAW68	♦FERB	435 - 93
BAW75	♦ALGG	245 - 41
♦FSC	♦ITTG	
	♦SIEG	
BAW76	♦ALGG	246 -118
FSC	♦ITTG	
	♦SIEG	
BAW78A	♦SIEG	272 -190
BAW78B	♦SIEG	272 -191
BAW78C	♦SIEG	272 -192
BAW78D	♦SIEG	272 -193
BAW79A	♦SIEG	272 -194
BAW79B	♦SIEG	272 -195
BAW79C	♦SIEG	272 -196
BAW79D	♦SIEG	272 -197
BAX12	♦APX	249 - 52
♦PHIN	♦RTCF	
♦SIEG	THEF	
	♦VALG	
BAX12A	♦APX	249 - 53
♦MULB	♦PHIN	
RTCF	♦VALG	
BAX13	♦FSC	245 -167
♦ITTG	♦MULB	
♦PHIN	♦RTCF	
THEF	♦VALG	
BAX14	♦APX	249 - 16
♦MULB	♦PHIN	
♦RTCF	♦VALG	
BAX14A	♦MULB	249 - 21
♦PHIN	♦RTCF	
	♦VALG	
BAX15	♦MULB	249 - 91
♦PHIN	♦RTCF	
	♦VALG	
BAX16	♦FSC	249 - 89
♦ITTG	♦MULB	
♦PHIN	♦RTCF	
THEF	♦VALG	
BAX17	♦MULB	249 -111
♦PHIN	♦RTCF	
THEF	♦VALG	
BAX18	♦APX	236 - 84
♦MULB	♦PHIN	
♦RTCF	♦VALG	
BAX18A	♦MULB	236 -153
♦PHIN	♦RTCF	
	♦VALG	
BAX45	♦SGSI	314 - 40
BAX46	♦SGSI	314 - 41
BAX47	♦SGSI	314 - 42
BAX48	♦SGSI	314 - 43
BAX49	♦SGSI	314 - 44
BAX50	♦SGSI	314 - 45
BAX51	♦SGSI	314 - 46
BAX52	♦SGSI	314 - 47
BAX53	♦SGSI	314 - 48
BAX54	♦SGSI	314 - 49
BAX55	♦SGSI	314 - 50
BAX56	♦SGSI	314 - 51
BAX57	♦SGSI	314 - 52
BAX58	♦SGSI	314 - 53
BAX59	♦SGSI	314 - 54
BAX60	♦SGSI	314 - 55
BAX61	♦SGSI	314 - 56
BAX62	♦SGSI	314 - 57
BAX63	♦SGSI	314 - 58
BAX64	♦SGSI	314 - 59
BAX65	♦SGSI	314 - 60
BAX66	♦SGSI	314 - 61
BAX67	♦SGSI	314 - 62
BAX68	♦SGSI	314 - 63
BAX69	♦SGSI	314 - 64
BAX70	♦SGSI	314 - 65
BAX71	♦SGSI	314 - 66
BAX72	♦SGSI	314 - 67
BAX73	♦SGSI	314 - 68
BAY41	♦SIEG	251 - 92
BAY42	♦SIEG	251 -100
BAY43	♦SIEG	251 -110
BAY44	♦SIEG	232 - 9
BAY45	♦SIEG	232 - 10
BAY46	♦SIEG	232 - 11
BAY60	♦SIEG	244 -176
BAY61	♦SIEG	247 - 17

TYPE No.	MFRS	Pg&Line
BAY63	SIEG	245 -168
BAY68	♦ALGG	245 - 52
BAY69	♦ALGG	246 - 42
BAY72	♦FSC	249 - 82
	THEF	
BAY73	♦FSC	234 - 88
BAY74	♦FSC	251 - 94
	SIEG	
BAY80	♦FSC	249 - 78
♦ITTG	♦MULB	
♦PHIN	♦RTCF	
THEF	♦VALG	
BAY82	♦FSC	244 - 99
BAY84	♦THEF	249 - 54
BAY85	♦THEF	249 -125
BAY85S(A)	♦THEF	271 -119
BAY93	♦ALGG	244 -164
BB1	♦INRJ	247 - 90
BB2	♦INRJ	247 -140
BB4	♦INRJ	247 -171
BB6	♦INRJ	247 -193
BB8	♦INRJ	247 -198
BB10	♦INRJ	247 -202
BB100	♦HITJ	231 -215
BB101	ITTG	446 - 43
BB112	♦SIEG	445 - 16
BB304	♦ALGG	445 - 17
	♦SIEG	
BB312	♦SIEG	445 - 18
BB313	♦SIEG	445 - 19
BB409	♦SIEG	445 - 20
BB505B	♦SIEG	445 - 21
BB505G	♦SIEG	445 - 22
BB609A	♦SIEG	445 - 23
BB609B	♦SIEG	445 - 24
BBY40	♦MULB	231 -137
♦PHIN	♦RTCF	
	♦VALG	
BCD08	♦EDI	426 - 31
BCD10	♦EDI	427 - 58
BCD15	♦EDI	429 - 45
BCD20	♦EDI	430 -138
BCD25	♦EDI	431 -108
BCD30	♦EDI	432 - 48
BCD35	♦EDI	432 -121
BCD40	♦EDI	432 -169
BCD45	♦EDI	433 - 3
BCD50	♦EDI	433 - 48
BD1	♦GPD	238 - 10
BD1-05	AEIL	444 - 41
BD1-06	AEIL	444 - 42
BD1-07	AEIL	444 - 43
BD1-08	AEIL	444 - 44
BD1-09	AEIL	444 - 45
BD1-10	AEIL	444 - 46
BD2	♦GPD	238 - 16
BD3	♦GPD	238 - 15
BD4	♦GPD	238 - 11
BD5	♦GPD	238 - 12
BD6	♦GPD	238 - 13
BD7	♦GPD	238 - 14
BD8-05	♦AEIL	445 - 25
BD8-06	♦AEIL	445 - 26
BD8-07	♦AEIL	445 - 27
BD8-08	♦AEIL	445 - 28
BD8-09	♦AEIL	445 - 29
BD8-10	♦AEIL	445 - 30
BD457	♦RTN	234 - 20
BD457F	♦RTN	234 - 21
BD457T	♦RTN	234 - 22
BD458	♦RTN	233 -181
BD458F	♦RTN	233 -182
BD458T	♦RTN	233 -183
BD483B	♦RTN	234 - 83
BD483BF	RTN	234 - 84
BD483BT	♦RTN	234 - 85
BD914	♦RTN	245 -215
BD914F	♦RTN	245 -216
BD914T	♦RTN	245 -217
BD3595	♦RTN	234 -198
BD3595F	♦RTN	234 -199
BD3595T	♦RTN	234 -200
BD3600	♦RTN	245 -169
BD3600F	♦RTN	245 -170
BD3600T	♦RTN	245 -171
BD4148	♦RTN	246 -153
BD4148F	♦RTN	246 -154
BD4148T	♦RTN	246 -155
BFW50	STI	362 -174
BFW100	STI	363 - 3
BFW200	STI	363 - 44
BFW300	STI	363 - 70
BFW400	STI	363 - 93
BFW500	STI	363 -117
BFW600	STI	363 -137
BFW800	STI	363 -175
BFW1000	STI	363 -206
BGX50A	♦SIEG	314 - 6
BH200	EDI	415 - 10
BH300	EDI	419 -101
BH400	EDI	421 -185
BH500	EDI	423 -131
BHC0001	♦SOD	293 -219
BHC0002	♦SOD	294 - 30
BHC0003	♦SOD	294 - 58
BHC0004	♦SOD	294 - 78
BHC0005	♦SOD	294 -120
BOD1-04	BBCG	339 - 45
BOD1-05	BBCG	339 - 46
BOD1-06	BBCG	339 - 47
BOD1-07	BBCG	339 - 48
BOD1-08	BBCG	339 - 49
BOD1-09	BBCG	339 - 50
BOD1-10	BBCG	339 - 51

TYPE No.	MFRS	Pg&Line
BOD1-11L	BBCG	339 - 52
BOD1-11LD	BBCG	339 - 53
BOD1-11R	BBCG	339 - 54
BOD1-11RD	BBCG	339 - 55
BOD1-12L	BBCG	339 - 56
BOD1-12LD	BBCG	339 - 57
BOD1-12R	BBCG	339 - 58
BOD1-12RD	BBCG	339 - 59
BOD1-13L	BBCG	339 - 60
BOD1-13LD	BBCG	339 - 61
BOD1-13R	BBCG	339 - 62
BOD1-13RD	BBCG	339 - 63
BOD1-14L	BBCG	339 - 64
BOD1-14LD	BBCG	339 - 65
BOD1-14R	BBCG	445 - 31
BOD1-14RD	BBCG	339 - 66
BOD1-15L	BBCG	339 - 67
BOD1-15LD	BBCG	339 - 68
BOD1-15R	BBCG	339 - 69
BOD1-15RD	BBCG	339 - 70
BOD1-16L	BBCG	339 - 71
BOD1-16LD	BBCG	339 - 72
BOD1-16R	BBCG	339 - 73
BOD1-16RD	BBCG	339 - 74
BOD1-17L	BBCG	339 - 75
BOD1-17LD	BBCG	339 - 76
BOD1-17R	BBCG	339 - 77
BOD1-17RD	BBCG	339 - 78
BOD1-18L	BBCG	339 - 79
BOD1-18LD	BBCG	339 - 80
BOD1-18R	BBCG	339 - 81
BOD1-18RD	BBCG	339 - 82
BOD1-19L	BBCG	339 - 83
BOD1-19LD	BBCG	339 - 84
BOD1-19R	BBCG	339 - 85
BOD1-19RD	BBCG	339 - 86
BOD1-20L	BBCG	339 - 87
BOD1-20LD	BBCG	339 - 88
BOD1-20R	BBCG	339 - 89
BOD1-20RD	BBCG	339 - 90
BOD1-21L	BBCG	339 - 91
BOD1-21LD	BBCG	339 - 92
BOD1-21R	BBCG	339 - 93
BOD1-21RD	BBCG	339 - 94
BOD1-22L	BBCG	339 - 95
BOD1-22LD	BBCG	339 - 96
BOD1-22R	BBCG	339 - 97
BOD1-22RD	BBCG	339 - 98
BOD1-23L	BBCG	339 - 99
BOD1-23LD	BBCG	339 -100
BOD1-23R	BBCG	339 -101
BOD1-23RD	BBCG	339 -102
BOD1-24L	BBCG	339 -103
BOD1-24LD	BBCG	339 -104
BOD1-24R	BBCG	339 -105
BOD1-24RD	BBCG	339 -106
BOD1-25L	BBCG	339 -107
BOD1-25LD	BBCG	339 -108
BOD1-25R	BBCG	339 -109
BOD1-25RD	BBCG	339 -110
BOD1-26L	BBCG	340 - 1
BOD1-26LD	BBCG	340 - 2
BOD1-26R	BBCG	340 - 3
BOD1-26RD	BBCG	340 - 4
BOD1-28L	BBCG	340 - 5
BOD1-28LD	BBCG	340 - 6
BOD1-28R	BBCG	340 - 7
BOD1-28RD	BBCG	340 - 8
BOD1-30L	BBCG	340 - 9
BOD1-30LD	BBCG	340 - 10
BOD1-30R	BBCG	340 - 11
BOD1-30RD	BBCG	340 - 12
BOD1-32R	BBCG	340 - 13
BOD1-34R	BBCG	340 - 14
BOD1-36R	BBCG	340 - 15
BOD1-38R	BBCG	340 - 16
BOD1-40R	BBCG	340 - 17
BODI-11LD	BBCG	340 - 18
BOV14S10K	BBCG	442 - 31
BOV14S14K	BBCG	442 - 32
BOV30S10K	BBCG	442 - 33
BOV30S14K	BBCG	442 - 34
BOV60S05K	BBCG	442 - 35
BOV60S07K	BBCG	442 - 36
BOV60S10K	BBCG	442 - 37
BOV60S14K	BBCG	442 -108
BOV60S20K	BBCG	442 -109
BOV130S10K	BBCG	442 -110
BOV130S14K	BBCG	443 - 1
BOV130S20K	BBCG	443 - 2
BOV150B32K	BBCG	443 - 7
BOV150S05K	BBCG	443 - 3
BOV150S07K	BBCG	443 - 4
BOV150S10K	BBCG	443 - 5
BOV150S14K	BBCG	443 - 6
BOV150S20K	BBCG	446 - 47
BOV250B25K	BBCG	443 - 8
BOV250S05K	BBCG	442 - 38
BOV250S07K	BBCG	442 - 39
BOV250S10K	BBCG	442 - 40
BOV250S14K	BBCG	442 - 41
BOV250S20K	BBCG	442 - 42
BOV275S05K	BBCG	442 - 43
BOV275S07K	BBCG	442 - 44
BOV275S10K	BBCG	442 - 45
BOV275S14K	BBCG	442 - 46
BOV275S20K	BBCG	442 - 47
BOV420B32K	BBCG	442 -107
BOV420S10K	BBCG	442 - 48
BOV420S14K	BBCG	442 - 49
BOV420S20K	BBCG	442 - 50
BOV550S10K	BBCG	442 - 51
BOV550S14K	BBCG	442 - 52
BOV550S20K	BBCG	442 - 53

TYPE No.	MFRS	Pg&Line
BOV625S10K	BBCG	442 - 54
BOV625S14K	BBCG	442 - 55
BOV625S20K	BBCG	442 - 56
BR5A5	EDL	252 -122
BR5B5	EDL	253 - 92
BR5C5	EDL	254 - 86
BR5D5	EDL	254 -145
BR5E5	EDL	255 - 2
BR5F5	EDL	255 - 57
BR5G5	EDL	255 -122
BR5H5	EDL	255 -155
BR5K5	EDL	255 -195
BR5M5	EDL	256 - 42
BR5N5	EDL	256 - 90
BR5P5	EDL	256 -114
BR31	♦DII	364 -104
	♦RECT	
BR31F	♦RECT	364 -105
BR31G	♦DII	364 -110
	♦RECT	
BR32	♦DII	364 -114
	♦RECT	
BR32F	♦RECT	364 -115
BR32G	♦DII	364 -120
	♦RECT	
BR34	♦DII	364 -131
	♦RECT	
BR34F	♦RECT	364 -132
BR34G	♦DII	364 -137
	♦RECT	
BR36	♦DII	364 -146
	♦RECT	
BR36F	♦RECT	364 -147
BR36G	♦DII	364 -152
	♦RECT	
BR38	♦DII	364 -161
	♦RECT	
BR38F	♦RECT	364 -162
BR38G	♦DII	364 -167
	♦RECT	
BR61	♦DII	366 - 44
	RECT	
BR61F	♦RECT	366 - 45
BR61G	♦DII	366 - 46
	♦RECT	
BR62	♦DII	366 - 70
	RECT	
BR62F	♦RECT	366 - 71
BR62G	♦DII	366 - 72
	♦RECT	
BR64	♦DII	366 - 99
	RECT	
BR64F	♦RECT	366 -100
BR64G	♦DII	366 -101
	♦RECT	
BR66	♦DII	366 -127
	RECT	
BR66F	♦RECT	366 -128
BR66G	♦DII	366 -129
	♦RECT	
BR68	♦DII	366 -154
	RECT	
BR68F	♦RECT	366 -155
BR68G	♦DII	366 -156
	♦RECT	
BR81	♦DII	367 - 4
	♦RECT	
BR81D	♦DII	362 -198
	♦RECT	
BR81DF	♦RECT	363 - 4
BR81DG	♦DII	363 - 5
	♦RECT	
BR81F	♦RECT	367 - 5
BR81G	♦DII	367 - 6
	♦RECT	
BR82	♦DII	367 - 17
	♦RECT	
BR82D	♦DII	363 - 30
	♦RECT	
BR82DF	♦RECT	363 - 45
BR82DG	♦DII	363 - 46
	♦RECT	
BR82F	♦RECT	367 - 18
BR82G	♦DII	367 - 19
	♦RECT	
BR84	♦DII	367 - 34
	♦RECT	
BR84D	♦DII	363 - 78
	♦RECT	
BR84DF	♦RECT	363 - 94
BR84DG	♦DII	363 - 95
	♦RECT	
BR84F	♦RECT	367 - 35
BR84G	♦DII	367 - 36
	♦RECT	
BR86	♦DII	367 - 50
	♦RECT	
BR86D	♦DII	363 -125
	♦RECT	
BR86DF	♦RECT	363 -138
BR86DG	♦DII	363 -139
	♦RECT	
BR86F	♦RECT	367 - 51
BR86G	♦DII	367 - 52
	♦RECT	
BR88	♦DII	367 - 67
	♦RECT	
BR88D	♦DII	363 -165
	♦RECT	
BR88DF	♦RECT	363 -176
BR88DG	♦DII	363 -177
	♦RECT	
BR88F	♦RECT	367 - 68

Δ-Registered with JEDEC by this manufacturer

♦-Mfr's data sheet available in microfilm service

1. TYPE No. CROSS INDEX

IN TYPE NUMBER SEQUENCE

TYPE No.	MFRS	Pg&Line
BR88G	♦DII	367 - 69
	♦RECT	
BR101	♦DII	367 -131
	♦RECT	
BR101F	♦RECT	367 -135
BR101G	♦RECT	367 -136
BR102	♦DII	367 -166
	♦RECT	
BR102F	♦RECT	367 -173
BR102G	♦RECT	367 -174
BR104	♦DII	367 -208
	♦RECT	
BR104F	♦RECT	367 -213
BR104G	♦RECT	367 -214
BR106	♦DII	368 - 27
	♦RECT	
BR106F	♦RECT	368 - 31
BR106G	♦RECT	368 - 32
BR108	♦DII	368 - 61
	♦RECT	
BR108F	♦RECT	368 - 63
BR108G	♦RECT	368 - 64
BR151	♦DII	369 - 1
	RECT	
BR151F	♦RECT	369 - 2
BR151G	♦DII	369 - 3
	♦RECT	
BR152	♦DII	369 - 27
	RECT	
BR152F	♦RECT	369 - 28
BR152G	♦DII	369 - 29
	♦RECT	
BR154	♦DII	369 - 54
	RECT	
BR154F	♦RECT	369 - 55
BR154G	♦DII	369 - 56
	♦RECT	
BR156	♦DII	369 - 79
	RECT	
BR156F	♦RECT	369 - 80
BR156G	♦DII	369 - 81
	♦RECT	
BR158	♦DII	369 - 99
	RECT	
BR158F	♦RECT	369 -100
BR158G	♦DII	369 -101
	♦RECT	
BR251	♦DII	369 -211
	RECT	
BR251F	♦RECT	369 -212
BR251G	♦DII	369 -213
	♦RECT	
BR252	♦DII	370 - 22
	RECT	
BR252F	♦RECT	370 - 23
BR252G	♦DII	370 - 24
	♦RECT	
BR254	♦DII	370 - 59
	RECT	
BR254F	♦RECT	370 - 60
BR254G	♦DII	370 - 61
	♦RECT	
BR256	♦DII	370 - 94
	RECT	
BR256F	♦RECT	370 - 95
BR256G	♦DII	370 - 96
	♦RECT	
BR258	♦DII	370 -116
	RECT	
BR258F	♦RECT	370 -117
BR258G	♦DII	370 -118
	♦RECT	
BR305	♦DII	364 - 90
	♦RECT	
BR305F	♦RECT	364 - 91
BR305G	♦DII	364 - 96
	♦RECT	
BR310	♦DII	364 -176
	♦RECT	
BR310F	♦RECT	364 -177
BR310G	♦DII	364 -182
	♦RECT	
BR351	♦DII	371 - 40
	RECT	
BR351F	♦RECT	371 - 41
BR351G	♦RECT	371 - 42
BR352	♦DII	371 - 59
	RECT	
BR352F	♦RECT	371 - 60
BR352G	♦RECT	371 - 61
BR354	♦DII	371 - 76
	RECT	
BR354F	♦RECT	371 - 77
BR354G	♦RECT	371 - 78
BR356	♦DII	371 - 92
	RECT	
BR356F	♦RECT	371 - 93
BR356G	♦RECT	371 - 94
BR358	♦DII	371 -107
	RECT	
BR358F	♦RECT	371 -108
BR358G	♦RECT	371 -109
BR412-5-10	♦EDL	241 -200
BR412-5-25	♦EDL	241 -201
BR412-5-5	♦EDL	241 -202
BR412-7-10	♦EDL	242 - 9
BR412-7-25	♦EDL	242 - 10
BR412-7-5	♦EDL	242 - 11
BR412-10-10	♦EDL	242 - 39
BR412-10-25	♦EDL	242 - 40
BR412-10-5	♦EDL	242 - 41
BR412-12-10	♦EDL	242 - 62
BR412-12-25	♦EDL	242 - 63
BR412-12-5	♦EDL	242 - 64

TYPE No.	MFRS	Pg&Line
BR412-15-10	♦EDL	242 - 85
BR412-15-25	♦EDL	242 - 86
BR412-15-5	♦EDL	242 - 87
BR412-20-10	♦EDL	242 -112
BR412-20-25	♦EDL	242 -113
BR412-20-5	♦EDL	242 -114
BR412-25-10	♦EDL	242 -126
BR412-25-25	♦EDL	242 -127
BR412-25-5	♦EDL	242 -128
BR412-30-10	♦EDL	242 -134
BR412-30-25	♦EDL	242 -135
BR412-30-5	♦EDL	242 -136
BR412-40-10	♦EDL	242 -143
BR412-40-25	♦EDL	242 -144
BR412-40-5	♦EDL	242 -145
BR412-50-10	♦EDL	242 -153
BR412-50-25	♦EDL	242 -154
BR412-50-5	♦EDL	242 -155
BR427-10	♦EDL	241 -110
BR427-15	♦EDL	241 -132
BR427-20	♦EDL	241 -147
BR427-25	♦EDL	241 -159
BR427-30	♦EDL	241 -168
BR427-35	♦EDL	241 -180
BR427-40	♦EDL	241 -185
BR427-45	♦EDL	241 -195
BR427-50	♦EDL	241 -203
BR427-55	♦EDL	241 -216
BR427-60	♦EDL	241 -219
BR427-65	♦EDL	242 - 7
BR427-70	♦EDL	242 - 12
BR587-10	♦EDL	241 -111
BR587-15	♦EDL	241 -133
BR587-20	♦EDL	241 -148
BR587-25	♦EDL	241 -160
BR587-30	♦EDL	241 -169
BR587-35	♦EDL	241 -181
BR587-40	♦EDL	241 -186
BR587-45	♦EDL	241 -196
BR587-50	♦EDL	241 -204
BR587-55	♦EDL	241 -217
BR587-60	♦EDL	241 -220
BR587-65	♦EDL	242 - 8
BR587-70	♦EDL	242 - 13
BR587-80	♦EDL	242 - 20
BR587-85	♦EDL	242 - 31
BR587-90	♦EDL	242 - 33
BR587-95	♦EDL	242 - 37
BR587-100	♦EDL	242 - 42
BR587-110	♦EDL	242 - 59
BR587-120	♦EDL	242 - 65
BR587-130	♦EDL	242 - 79
BR587-140	♦EDL	242 - 80
BR587-150	♦EDL	242 - 88
BR587-160	♦EDL	242 -101
BR587-170	♦EDL	242 -104
BR587-180	♦EDL	242 -106
BR587-190	♦EDL	242 -110
BR587-200	♦EDL	242 -115
BR588-10	♦EDL	248 -141
BR588-15	♦EDL	248 -150
BR588-20	♦EDL	248 -161
BR588-25	♦EDL	248 -165
BR588-30	♦EDL	248 -169
BR588-35	♦EDL	248 -174
BR588-40	♦EDL	248 -177
BR588-45	♦EDL	248 -180
BR588-50	♦EDL	248 -182
BR588-55	♦EDL	248 -185
BR588-60	♦EDL	248 -187
BR588-65	♦EDL	248 -190
BR588-70	♦EDL	248 -192
BR588-80	♦EDL	248 -193
BR588-85	♦EDL	248 -195
BR588-90	♦EDL	248 -196
BR588-95	♦EDL	248 -197
BR588-100	♦EDL	248 -198
BR588-110	♦EDL	248 -200
BR588-120	♦EDL	248 -201
BR588-130	♦EDL	248 -203
BR588-140	♦EDL	248 -204
BR588-150	♦EDL	248 -205
BR588-160	♦EDL	248 -207
BR588-170	♦EDL	248 -208
BR588-180	♦EDL	248 -209
BR588-190	♦EDL	248 -210
BR588-200	♦EDL	248 -211
BR605	♦DII	366 - 21
	RECT	
BR605F	♦RECT	366 - 22
BR605G	♦DII	366 - 23
	♦RECT	
BR610	♦DII	366 -178
	RECT	
BR610F	♦RECT	366 -179
BR610G	♦DII	366 -180
	♦RECT	
BR805	♦DII	366 -207
	♦RECT	
BR805D	♦DII	362 -164
	♦RECT	
BR805DF	♦RECT	362 -175
BR805DG	♦DII	362 -176
	♦RECT	
BR805F	♦RECT	366 -208
BR805G	♦DII	366 -209
	♦RECT	
BR810	♦DII	367 - 82
	♦RECT	
BR810D	♦DII	363 -198
	♦RECT	
BR810DF	♦RECT	363 -207
BR810DG	♦DII	363 -208
	♦RECT	

TYPE No.	MFRS	Pg&Line
BR810F	♦RECT	367 - 83
BR810G	♦DII	367 - 84
	♦RECT	
BR1005	♦DII	367 -102
	♦RECT	
BR1005F	♦RECT	367 -105
BR1005G	♦RECT	367 -106
BR1010	♦DII	368 - 81
	♦RECT	
BR1010F	♦RECT	368 - 82
BR1010G	♦RECT	368 - 83
BR1505	♦DII	368 -204
	♦RECT	
BR1505F	♦RECT	368 -205
BR1505G	♦DII	368 -206
	♦RECT	
BR1510	♦DII	369 -112
	♦RECT	
BR1510F	♦RECT	369 -113
BR1510G	♦DII	369 -114
	♦RECT	
BR2505	♦DII	369 -188
	RECT	
BR2505F	♦RECT	369 -189
BR2505G	♦DII	369 -190
	♦RECT	
BR2510	♦DII	370 -133
	RECT	
BR2510F	♦RECT	370 -134
BR2510G	♦DII	370 -135
	♦RECT	
BR3505	♦DII	371 - 21
	RECT	
BR3505F	♦RECT	371 - 22
BR3505G	♦RECT	371 - 23
BR3510	♦DII	371 -119
	RECT	
BR3510F	♦RECT	371 -120
BR3510G	♦RECT	371 -121
BRF151	♦INC	361 -137
BRF152	♦INC	361 -163
BRF153	♦INC	361 -196
BRF154	♦INC	362 - 32
BRF155	♦INC	362 - 66
BRF156	♦INC	362 - 93
BRF157	♦INC	402 - 59
BRF201	♦INC	362 -177
BRF202	♦INC	363 - 6
BRF203	♦INC	363 - 47
BRF204	♦INC	363 - 96
BRF205	♦INC	363 -140
BRF206	♦INC	363 -178
BRF207	♦INC	402 -112
BRF251	♦INC	364 - 20
BRF252	♦INC	364 - 24
BRF253	♦INC	364 - 29
BRF254	♦INC	364 - 36
BRF255	♦INC	364 - 41
BRF256	♦INC	364 - 46
BRF257	♦INC	402 -140
BRF401	♦INC	365 - 16
BRF402	♦INC	365 - 34
BRF403	♦INC	365 - 55
BRF404	♦INC	365 - 77
BRF405	♦INC	365 - 99
BRF406	♦INC	365 -117
BRF407	♦INC	402 -199
BRR101	♦INC	360 -101
BRR102	♦INC	360 -128
BRR103	♦INC	360 -161
BRR104	♦INC	360 -196
BRR105	♦INC	361 - 19
BRR106	♦INC	361 - 46
BRR107	♦INC	401 -183
BRR151	♦INC	361 -129
BRR152	♦INC	361 -156
BRR153	♦INC	361 -183
BRR154	♦INC	362 - 18
BRR155	♦INC	362 - 54
BRR156	♦INC	362 - 81
BRR157	♦INC	402 - 45
BRS10-01	♦INC	367 -140
BRS10-02	♦INC	367 -178
BRS10-04	♦INC	367 -218
BRS10-005	♦INC	367 -109
BRS10-06	♦INC	368 - 36
BRS10-08	♦INC	368 - 67
BRS10-10	♦INC	403 - 47
BRS12-01	♦INC	368 -114
BRS12-02	♦INC	368 -129
BRS12-04	♦INC	368 -149
BRS12-005	♦INC	368 -104
BRS12-06	♦INC	368 -164
BRS12-08	♦INC	368 -178
BRS12-10	♦INC	403 - 61
BRS15-01	♦INC	368 -214
BRS15-02	♦INC	369 - 18
BRS15-04	♦INC	369 - 46
BRS15-005	♦INC	368 -197
BRS15-06	♦INC	369 - 70
BRS15-08	♦INC	369 - 93
BRS15-10	♦INC	403 - 83
BRS25-01(M)	♦INC	369 -170
BRS25-02(M)	♦INC	370 - 10
BRS25-04(M)	♦INC	370 - 47
BRS25-005(M)	♦INC	369 -177
BRS25-06(M)	♦INC	370 - 82
BRS25-08(M)	♦INC	370 -108
BRS25-10(M)	♦INC	403 -127
BRS35-01	♦INC	371 - 32
BRS35-02	♦INC	371 - 52
BRS35-04	♦INC	371 - 69
BRS35-005	♦INC	371 - 13
BRS35-06	♦INC	371 - 85

TYPE No.	MFRS	Pg&Line
BRS35-08	♦INC	371 -101
BRS35-10	♦INC	403 -167
BRS101	♦INC	360 - 91
BRS102	♦INC	360 -119
BRS103	♦INC	360 -152
BRS104	♦INC	360 -187
BRS105	♦INC	361 - 10
BRS106	♦INC	361 - 37
BRS107	♦INC	361 - 60
BRS301	♦INC	364 - 97
BRS302	♦INC	364 -111
BRS303	♦INC	364 -121
BRS304	♦INC	364 -138
BRS305	♦INC	364 -153
BRS306	♦INC	364 -168
BRS307	♦INC	402 -170
BRS601	♦INC	366 - 30
BRS602	♦INC	366 - 53
BRS603	♦INC	366 - 79
BRS604	♦INC	366 -108
BRS605	♦INC	366 -136
BRS606	♦INC	366 -163
BRS607	♦INC	403 - 5
BS9301F019-8308		236 - 38
	LUCB	
BS9301F019-8805		236 - 39
	LUCB	
BY54	MULB	286 -213
PHIN	RTCF	
	VALG	
BY55	MULB	286 -188
PHIN	RTCF	
	VALG	
BY56	MULB	402 - 97
PHIN	RTCF	
	VALG	
BY125	♦BELI	280 -120
BY126	♦BELI	282 - 14
BY127	BELI	282 - 65
	♦VALG	
BY133	FGRS	408 -181
♦ITTG	WAB	
BY134	♦ITTG	281 -183
BY135	♦ITTG	280 -122
BY164	♦MULB	361 - 84
♦PHIN	♦RTCF	
	♦VALG	
BY176	♦MULB	429 - 4
♦PHIN	♦RTCF	
	♦VALG	
BY179	♦MULB	361 - 31
♦PHIN	♦VALG	
BY184	♦MULB	232 - 89
♦PHIN	♦RTCF	
	♦VALG	
BY187	♦EDI	242 - 43
BY187-01	♦EDI	242 - 66
BY188	♦MULB	282 -147
♦PHIN	♦RTCF	
	♦VALG	
BY188A	♦MULB	282 -148
♦PHIN	♦RTCF	
	VALG	
BY188B	♦MULB	282 -149
♦PHIN	♦RTCF	
	VALG	
BY188G	MULB	283 -105
PHIN	RTCF	
	VALG	
BY203-12	♦ALGG	247 -206
BY203-16	♦ALGG	247 -213
BY203-20	♦ALGG	247 -220
BY203/12S	♦ALGG	256 - 89
BY203/16S	♦ALGG	256 -126
BY203/20S	♦ALGG	256 -142
BY206	♦MULB	251 -140
♦PHIN	♦VALG	
BY207	♦MULB	251 -142
♦PHIN	♦VALG	
BY208-600	♦MULB	251 -143
♦PHIN	♦RTCF	
	♦VALG	
BY208-800	♦MULB	251 -145
♦PHIN	♦RTCF	
	♦VALG	
BY208-1000	♦MULB	251 -147
♦PHIN	♦RTCF	
	♦VALG	
BY209	♦MULB	251 -117
♦PHIN	♦RTCF	
	♦VALG	
BY214-50	THEF	291 -124
BY214-100	THEF	291 -167
BY214-200	THEF	291 -217
BY214-400	THEF	292 - 64
BY214-600	THEF	292 -120
BY214-800	THEF	292 -171
BY214-1000	THEF	403 - 18
BY218-100	♦THEF	258 - 81
BY218-200	♦THEF	259 - 77
BY218-400	♦THEF	260 - 44
BY218-600	♦THEF	260 -170
BY223	♦MULB	262 - 29
♦PHIN	♦VALG	
BY224-400	♦MULB	365 -155
♦PHIN	♦RTCF	
	♦VALG	
BY224-600	♦MULB	365 -156
♦PHIN	♦RTCF	
	♦VALG	
BY225-100	♦MULB	365 -153
♦PHIN	♦RTCF	
	♦VALG	

TYPE No.	MFRS	Pg&Line
BY225-200	♦MULB	365 -154
♦PHIN	♦RTCF	
	♦VALG	
BY227	♦MULB	406 - 97
♦PHIN	♦RTCF	
	♦VALG	
BY228	♦ALGG	247 -211
MULB	♦PHIN	287 -109
RTCF	THEF	
	♦VALG	
BY228/13	♦ALGG	261 -149
BY228/15	♦ALGG	261 -164
BY229-200	♦MULB	292 -208
♦PHIN	♦RTCF	
	♦VALG	
BY229-200R	♦MULB	293 - 12
♦PHIN	♦RTCF	
	♦VALG	
BY229-400	♦MULB	292 -210
♦PHIN	♦RTCF	
	♦VALG	
BY229-400R	♦MULB	293 - 19
♦PHIN	♦RTCF	
	♦VALG	
BY229-600	♦MULB	292 -211
♦PHIN	♦RTCF	
	♦VALG	
BY229-600R	♦MULB	293 - 25
♦PHIN	♦RTCF	
	♦VALG	
BY229-800	♦MULB	292 -213
♦PHIN	♦RTCF	
	♦VALG	
BY229-800R	♦MULB	293 - 27
♦PHIN	♦RTCF	
	♦VALG	
BY229-1000	♦MULB	262 - 19
♦PHIN	♦RTCF	
	♦VALG	
BY229-1000R	♦MULB	403 - 33
♦PHIN	♦RTCF	
	♦VALG	
BY233-200	♦THEF	259 - 68
BY233-400	♦THEF	260 - 31
BY233-600	♦THEF	260 -159
BY239-200	THEF	294 - 47
BY239-400	THEF	294 - 94
BY239-600	THEF	294 -131
BY239-800	THEF	294 -146
BY246-600	SIEG	287 - 82
BY246-1000	SIEG	402 -125
BY246-1200	SIEG	406 - 99
BY249-300	MULB	292 -209
PHIN	RTCF	
	VALG	
BY249-600	MULB	292 -212
PHIN	RTCF	
	VALG	
BY251	♦FGRS	288 - 98
♦ITTG	THEF	
	WAB	
BY252	♦FGRS	288 -197
♦ITTG	THEF	
	WAB	
BY253	♦FGRS	289 - 64
♦ITTG	THEF	
	WAB	
BY254	♦FGRS	289 -134
♦ITTG	THEF	
	WAB	
BY255	♦FGRS	408 -202
♦ITTG	THEF	
	WAB	
BY256	♦MULB	361 -193
♦PHIN	♦VALG	
BY257	♦MULB	362 - 64
♦PHIN	♦VALG	
BY260-200	♦MULB	368 -139
♦PHIN	♦RTCF	
	♦VALG	
BY260-400	♦MULB	368 -159
♦PHIN	♦RTCF	
	♦VALG	
BY260-600	♦MULB	368 -174
♦PHIN	♦RTCF	
	♦VALG	
BY261-200	♦MULB	370 - 11
♦PHIN	♦RTCF	
	♦VALG	
BY261-400	♦MULB	370 - 48
♦PHIN	♦RTCF	
	♦VALG	
BY261-600	♦MULB	370 - 83
♦PHIN	♦RTCF	
	♦VALG	
BY268	♦ALGG	409 - 67
BY269	♦ALGG	412 - 39
BY277-600R	♦MULB	261 - 9
♦PHIN	♦RTCF	
	♦VALG	
BY277-750R	♦MULB	261 - 38
♦PHIN	♦RTCF	
	♦VALG	
BY289-150	♦SIEG	250 -138
BY289-200	♦SIEG	250 -149
BY289-300	♦SIEG	250 -175
BY289-400	♦SIEG	250 -181
BY289-450	♦SIEG	250 -205
BY289-600	♦SIEG	250 -212
BY289-900	♦SIEG	251 - 16
BY289-1000	♦SIEG	251 - 17
BY291-75	♦SIEG	250 -108
BY291-150	♦SIEG	250 -131
BY291-225	♦SIEG	250 -164

Δ-Registered with JEDEC by this manufacturer

♦-Mfr's data sheet available in microfilm service

1. TYPE No. CROSS INDEX

IN TYPE NUMBER SEQUENCE

TYPE No.	MFRS	Pg&Line
BY291-300	♦SIEG	250 -169
BY291-450	♦SIEG	250 -202
BY291-600	♦SIEG	250 -207
BY292-75	♦SIEG	250 -109
BY292-150	♦SIEG	250 -132
BY292-225	♦SIEG	250 -165
BY292-300	♦SIEG	250 -170
BY293-75	♦SIEG	250 -110
BY293-150	♦SIEG	250 -133
BY293-225	♦SIEG	250 -166
BY293-300	♦SIEG	250 -171
BY294-75	♦SIEG	250 -111
BY294-150	♦SIEG	250 -134
BY294-225	♦SIEG	250 -167
BY294-300	♦SIEG	250 -172
BY294-450	♦SIEG	250 -203
BY294-600	♦SIEG	250 -208
BY295-150	♦SIEG	250 -135
BY295-200	♦SIEG	250 -144
BY295-300	♦SIEG	250 -173
BY295-400	♦SIEG	250 -178
BY295-450	♦SIEG	250 -204
BY295-600	♦SIEG	250 -209
BY296	♦FGRS	286 - 19
♦ITTG	♦THEF	
BY297	♦FGRS	286 - 59
♦ITTG	♦THEF	
BY298	♦FGRS	286 -109
♦ITTG	♦THEF	
BY299	♦FGRS	286 -197
♦ITTG	♦THEF	
BY300-500	♦SIEG	250 -206
BY300-600	♦SIEG	250 -210
BY300-650	♦SIEG	251 - 7
BY300-700	♦SIEG	251 - 8
BY302-75	SIEG	287 - 6
BY302-150	SIEG	287 - 26
BY302-225	SIEG	287 - 46
BY302-300	SIEG	287 - 47
BY318-100	♦THEF	274 - 39
BY318-200	♦THEF	274 - 40
BY318-400	♦THEF	274 - 41
BY318-600	♦THEF	274 - 42
BY329-800	♦MULB	293 -128
♦PHIN	♦RTCF	
	♦VALG	
BY329-1000	♦MULB	403 - 40
♦PHIN	♦RTCF	
	♦VALG	
BY329-1200	♦MULB	406 -157
♦PHIN	♦RTCF	
	♦VALG	
BY350-1300	SIEG	408 -191
BY350-1500	SIEG	411 - 89
BY359-1000	♦MULB	402 -202
♦PHIN	♦RTCF	
	♦VALG	
BY359-1300	♦MULB	408 -208
♦PHIN	♦RTCF	
	♦VALG	
BY359-1500	♦MULB	411 -110
♦PHIN	♦RTCF	
	♦VALG	
BY360-600	SIEG	281 -153
BY396	♦FGRS	247 - 86
♦ITTG	♦THEF	
BY397	♦FGRS	247 -136
♦ITTG	♦THEF	
BY398	♦FGRS	247 -168
♦ITTG	♦THEF	
BY399	♦FGRS	247 -196
♦ITTG	♦THEF	
BY406A	THEF	279 - 92
BY407A	THEF	279 -115
BY409	♦VALG	292 -187
BY409A	♦MULB	251 -116
♦PHIN	♦RTCF	
	♦VALG	
BY438	♦MULB	261 -165
♦PHIN	RTCF	
	♦VALG	
BY448	♦ALGG	411 - 96
♦MULB	♦PHIN	
RTCF	♦VALG	
BY458	♦ALGG	406 -130
♦MULB	♦PHIN	
RTCF	♦VALG	
BY476	♦MULB	251 -118
♦PHIN	♦RTCF	
	♦VALG	
BY476A	♦MULB	251 -119
♦PHIN	♦RTCF	
	♦VALG	
BY477	♦MULB	431 - 35
♦PHIN	♦RTCF	
	♦VALG	
BY478	♦MULB	431 -195
♦PHIN	♦RTCF	
	♦VALG	
BY505	♦MULB	251 - 34
♦PHIN	♦RTCF	
	♦VALG	
BY509	♦MULB	295 -172
♦PHIN	RTCF	
	VALG	
BY510	♦MULB	427 -219
♦PHIN	♦RTCF	
	♦VALG	
BY527	♦MULB	295 -137
♦PHIN	♦RTCF	
	♦VALG	
BY550/50	FGRS	290 -119
BY550/100	FGRS	290 -145
BY550/200	FGRS	290 -181

TYPE No.	MFRS	Pg&Line
BY550/400	FGRS	291 - 12
BY550/600	FGRS	291 - 51
BY550/800	FGRS	291 - 74
BY584	♦MULB	251 - 27
♦PHIN	♦RTCF	
	♦VALG	
BY588	♦MULB	283 -106
♦PHIN	♦RTCF	
	♦VALG	
BY609	♦MULB	251 - 54
♦PHIN	♦RTCF	
	♦VALG	
BY610	♦MULB	251 - 55
♦PHIN	♦RTCF	
	♦VALG	
BY707	♦MULB	251 - 49
♦PHIN	♦RTCF	
	♦VALG	
BY708	♦MULB	251 - 56
♦PHIN	♦RTCF	
	♦VALG	
BY709	♦MULB	251 - 60
♦PHIN	♦RTCF	
	♦VALG	
BY710	♦MULB	251 - 66
♦PHIN	♦RTCF	
	♦VALG	
BY711	♦MULB	251 - 68
♦PHIN	♦RTCF	
	♦VALG	
BY712	♦PHIN	291 -178
	♦RTCF	
BY713	♦PHIN	292 - 8
BY714	♦MULB	251 - 76
♦PHIN	♦RTCF	
	♦VALG	
BYM56A	♦MULB	289 -186
♦PHIN	♦RTCF	
	♦VALG	
BYM56B	♦MULB	289 -195
♦PHIN	♦RTCF	
	♦VALG	
BYM56C	♦MULB	289 -201
♦PHIN	♦RTCF	
	♦VALG	
BYM56D	♦MULB	289 -205
♦PHIN	♦RTCF	
	♦VALG	
BYM56E	♦MULB	402 -197
♦PHIN	♦RTCF	
	♦VALG	
BYS15	♦SIEG	296 - 25
BYS21	SIEG	279 -201
BYS21-45	♦SIEG	279 -202
BYS21-90	♦SIEG	280 - 40
BYS22-45	♦SIEG	285 -171
BYS22-90	♦SIEG	286 - 4
BYS24	SIEG	293 - 61
BYS24-45	♦SIEG	290 - 18
BYS24-90	♦SIEG	290 -132
BYS26	♦SIEG	287 -161
BYS26-45	♦SIEG	287 -162
BYS26-90	♦SIEG	287 -212
BYS27-45	♦SIEG	290 -106
BYS28	SIEG	298 -104
BYS28-45	♦SIEG	295 -189
BYS28-90	♦SIEG	295 -192
BYS30	♦SIEG	299 -217
BYS31	SIEG	300 - 27
BYS32	SIEG	300 - 4
BYS41	SIEG	299 -218
BYS42	SIEG	299 -219
BYS50	♦SIEG	303 - 67
BYS51	SIEG	303 - 65
BYS71	SIEG	305 - 6
BYS72	SIEG	305 - 3
BYS76	SIEG	304 -219
BYS79	♦SIEG	296 - 38
BYS80	♦SIEG	296 - 36
BYS92-40	♦SIEG	305 - 31
BYS92-45	♦SIEG	305 - 32
BYS92-50	♦SIEG	305 - 33
BYS93-40	♦SIEG	307 - 37
BYS93-45	♦SIEG	307 - 38
BYS93-50	♦SIEG	307 - 40
BYS94	SIEG	444 - 47
BYS95	SIEG	444 - 48
BYS95-40	♦SIEG	303 - 64
BYS95-45	♦SIEG	303 - 70
BYS95-50	♦SIEG	303 - 76
BYS96	SIEG	444 - 49
BYS97	SIEG	444 - 50
BYS97-40	♦SIEG	305 -183
BYS97-45	♦SIEG	305 -184
BYS97-50	♦SIEG	305 -186
BYS98-40	♦SIEG	299 -213
BYS98-45	♦SIEG	300 - 1
BYS98-50	♦SIEG	300 - 25
BYT01-200	♦THEF	259 - 25
BYT01-300	♦THEF	259 -166
BYT01-400	♦THEF	260 - 2
BYT03-200	♦THEF	259 - 26
BYT03-300	♦THEF	259 -167
BYT03-400	♦THEF	260 - 3
BYT08P200	♦THEF	259 - 42
BYT08P300	♦THEF	259 -173
BYT08P400	♦THEF	260 - 11
BYT08PI200	♦THEF	259 - 43
BYT08PI300	♦THEF	259 -174
BYT08PI400	♦THEF	260 - 12
BYT11-600	♦THEF	255 - 82
BYT11-800	♦THEF	255 -172
BYT11-1000	♦THEF	256 - 25
BYT12-200	♦THEF	254 - 31

TYPE No.	MFRS	Pg&Line
BYT12-300	♦THEF	254 -118
BYT12-400	♦THEF	254 -159
BYT12-600	♦THEF	260 -149
BYT12-800	♦THEF	261 - 41
BYT12-1000(A)		261 -105
	♦THEF	
BYT12P600	♦THEF	260 -150
BYT12P800	♦THEF	260 -151
BYT12P-1000(A)		261 -106
	♦THEF	
BYT12PI-600(A)		260 -152
	♦THEF	
BYT12PI-800(A)		261 - 42
	♦THEF	
BYT12PI-1000(A)		261 -107
	♦THEF	
BYT13-600	♦THEF	255 - 85
BYT13-800	♦THEF	255 -174
BYT13-1000	♦THEF	256 - 27
BYT16P200	♦THEF	259 - 44
BYT16P300	♦THEF	259 -175
BYT16P400	♦THEF	260 - 13
BYT30-200	♦THEF	259 - 49
BYT30-300	♦THEF	259 -178
BYT30-400	♦THEF	260 - 18
BYT30-600(A)	♦THEF	260 -154
BYT30-800(A)	♦THEF	261 - 44
BYT30-1000(A)		261 -108
	♦THEF	
BYT30P200	♦THEF	259 - 50
BYT30P300	♦THEF	259 -179
BYT30P400	♦THEF	260 - 19
BYT30P600	♦THEF	260 -155
BYT30P800	♦THEF	261 - 45
BYT30P-1000(A)		261 -109
	♦THEF	
BYT30PI200	♦THEF	259 - 51
BYT30PI300	♦THEF	259 -180
BYT30PI400	♦THEF	260 - 20
BYT30PI-600(A)		260 -156
	♦THEF	
BYT30PI-800(A)		261 - 46
	♦THEF	
BYT30PI-1000(A)		261 -110
	♦THEF	
BYT60-200	♦THEF	259 - 9
BYT60-300	♦THEF	259 -165
BYT60-400	♦THEF	259 -215
BYT60P200	♦THEF	259 - 52
BYT60P300	♦THEF	259 -181
BYT60P400	♦THEF	260 - 21
BYT61-600	♦SSEI	274 - 45
	♦THEF	
BYT61-800	♦SSEI	274 - 46
	♦THEF	
BYT61-900	♦THEF	274 - 47
BYT61-1000	♦SSEI	401 - 9
	♦THEF	
BYT65-600	♦SSEI	274 - 53
	♦THEF	
BYT65-800	♦SSEI	274 - 54
	♦THEF	
BYT65-900	♦THEF	274 - 55
BYT65-1000	♦SSEI	401 - 12
	♦THEF	
BYT67-800	♦THEF	261 - 52
BYT67-1000	♦THEF	261 -115
BYT71-100	♦THEF	258 -122
BYT71-200	♦THEF	259 -121
BYT71-400	♦THEF	260 - 80
BYT71-600	♦THEF	241 - 43
BYT71-800	♦THEF	261 - 81
BYT75-200	♦SSEI	263 -170
	♦THEF	
BYT75-400	♦SSEI	263 -179
	♦THEF	
BYT75-500	♦THEF	263 -187
BYT75-600	♦SSEI	263 -191
	♦THEF	
BYT75-800	♦SSEI	240 - 67
BYT75-1000	♦SSEI	240 -111
BYT77	♦ALGG	255 -179
BYT78	♦ALGG	256 - 34
BYT79-300	♦MULB	296 - 12
♦PHIN	♦RTCF	
	♦VALG	
BYT79-400	♦MULB	296 - 13
♦PHIN	♦RTCF	
	♦VALG	
BYT79-500	♦MULB	296 - 14
♦PHIN	♦RTCF	
	♦VALG	
BYT95A	♦MULB	277 -119
♦PHIN	♦RTCF	
	♦VALG	
BYT95B	♦MULB	277 -147
♦PHIN	♦RTCF	
	♦VALG	
BYT95C	♦MULB	277 -173
♦PHIN	♦RTCF	
	♦VALG	
BYT95D	♦MULB	261 - 63
♦PHIN	♦RTCF	
	♦VALG	
BYT95E	♦MULB	261 -122
♦PHIN	♦RTCF	
	♦VALG	
BYT230PI200	♦THEF	273 - 15
BYT230PI300	♦THEF	273 - 34
BYT230PI400	♦THEF	273 - 38
BYT230PI-600(A)		272 -116
	♦THEF	
BYT230PI-800(A)		272 -121
	♦THEF	

TYPE No.	MFRS	Pg&Line
BYT230PI-1000(A)		272 -123
	♦THEF	
BYT230PIV200	♦THEF	273 - 16
BYT230PIV300	♦THEF	273 - 35
BYT230PIV400	♦THEF	273 - 39
BYT230PIV-600(A)		272 -117
	♦THEF	
BYT230PIV-800(A)		272 -122
	♦THEF	
BYT230PIV-1000(A)		
	♦THEF	272 -124
BYV10-20	♦THEF	436 -106
BYV10-20A	♦THEF	374 - 24
BYV10-30	♦THEF	436 -107
BYV10-40	♦THEF	436 -108
BYV10-60	♦THEF	374 - 51
BYV12	♦ALGG	253 - 90
BYV13	♦ALGG	254 -220
BYV14	♦ALGG	255 -118
BYV15	♦ALGG	255 -192
BYV16	♦ALGG	256 - 41
BYV19-30	MULB	436 - 49
PHIN	RTCF	
	VALG	
BYV19-35	MULB	436 - 50
PHIN	RTCF	
	VALG	
BYV19-40	MULB	436 - 51
PHIN	RTCF	
	VALG	
BYV19-45	MULB	436 - 52
PHIN	RTCF	
	VALG	
BYV20-30	♦MULB	295 -186
♦PHIN	♦RTCF	
	VALG	
BYV20-35	♦MULB	295 -187
♦PHIN	♦RTCF	
	VALG	
BYV20-40	♦MULB	295 -188
♦PHIN	♦RTCF	
	VALG	
BYV20-45	♦MULB	436 - 53
♦PHIN	♦RTCF	
	♦VALG	
BYV21-30	♦MULB	436 - 41
♦PHIN	♦RTCF	
	VALG	
BYV21-35	♦MULB	298 - 99
♦PHIN	♦RTCF	
	VALG	
BYV21-40	♦MULB	298 -103
♦PHIN	♦RTCF	
	VALG	
BYV21-45	♦MULB	436 - 42
PHIN	♦RTCF	
	VALG	
BYV22-30	♦MULB	302 -116
♦PHIN	♦RTCF	
	VALG	
BYV22-35	♦MULB	302 -117
♦PHIN	♦RTCF	
	VALG	
BYV22-40	♦MULB	302 -119
♦PHIN	♦RTCF	
	VALG	
BYV22-45	♦MULB	436 - 54
♦PHIN	♦RTCF	
	♦VALG	
BYV23-30	♦MULB	304 - 11
♦PHIN	♦RTCF	
	VALG	
BYV23-35	♦MULB	304 - 12
♦PHIN	♦RTCF	
	VALG	
BYV23-40	♦MULB	304 - 13
♦PHIN	♦RTCF	
	VALG	
BYV23-45	♦MULB	304 - 14
♦PHIN	♦RTCF	
	VALG	
BYV24-800	MULB	262 -121
PHIN	RTCF	
	VALG	
BYV24-1000	MULB	262 -123
PHIN	RTCF	
	VALG	
BYV26A	♦MULB	254 - 17
♦PHIN	♦RTCF	
	♦VALG	
BYV26B	♦MULB	254 -150
♦PHIN	♦RTCF	
	♦VALG	
BYV26C	♦MULB	255 - 62
♦PHIN	♦RTCF	
	♦VALG	
BYV27-50	♦MULB	444 - 99
♦PHIN	RTCF	
	♦VALG	
BYV27-100	MULB	444 -100
♦PHIN	RTCF	
	VALG	
BYV27-150	MULB	444 -101
♦PHIN	RTCF	
	VALG	
BYV27-200	MULB	444 -102
♦PHIN	RTCF	
	VALG	
BYV28-50	♦MULB	444 -103
PHIN	RTCF	
	VALG	
BYV28-100	♦MULB	444 -104
PHIN	RTCF	
	VALG	

TYPE No.	MFRS	Pg&Line
BYV28-150	♦MULB	444 -105
PHIN	RTCF	
	VALG	
BYV28-200	♦MULB	444 -106
PHIN	RTCF	
	VALG	
BYV29-300	♦MULB	293 -169
♦PHIN	♦RTCF	
	♦VALG	
BYV29-400	♦MULB	293 -171
♦PHIN	♦RTCF	
	♦VALG	
BYV29-500	♦MULB	293 -172
♦PHIN	♦RTCF	
	♦VALG	
BYV30-200	♦MULB	258 -209
♦PHIN	♦RTCF	
	VALG	
BYV30-300	♦MULB	259 -164
♦PHIN	♦RTCF	
	VALG	
BYV30-400	♦MULB	259 -214
♦PHIN	♦RTCF	
	VALG	
BYV32-50	♦MULB	293 -200
♦PHIN	♦RTCF	
SIEG	VALG	
BYV32-100	♦MULB	293 -220
♦PHIN	♦RTCF	
SIEG	VALG	
BYV32-150	♦MULB	294 - 24
♦PHIN	♦RTCF	
SIEG	VALG	
BYV32-200	♦MULB	294 - 31
♦PHIN	♦RTCF	
SIEG	VALG	
BYV33-30	MULB	436 - 55
PHIN	RTCF	
	VALG	
BYV33-35	MULB	436 - 56
PHIN	RTCF	
	VALG	
BYV33-40	MULB	436 - 57
PHIN	RTCF	
	VALG	
BYV33-45	MULB	436 - 58
PHIN	RTCF	
	VALG	
BYV34-300	♦MULB	297 -156
♦PHIN	♦RTCF	
	♦VALG	
BYV34-400	♦MULB	297 -172
♦PHIN	♦RTCF	
	♦VALG	
BYV34-500	♦MULB	297 -188
♦PHIN	♦RTCF	
	♦VALG	
BYV37	♦ALGG	255 -180
BYV38	♦ALGG	256 - 35
BYV42-50	♦MULB	300 - 21
♦PHIN	♦RTCF	
	♦VALG	
BYV42-100	♦MULB	300 - 52
♦PHIN	♦RTCF	
	♦VALG	
BYV42-150	♦MULB	300 - 65
♦PHIN	♦RTCF	
	♦VALG	
BYV42-200	♦MULB	300 - 85
♦PHIN	♦RTCF	
	♦VALG	
BYV43-30	♦MULB	375 -170
♦PHIN	♦RTCF	
	♦VALG	
BYV43-35	♦MULB	375 -173
♦PHIN	♦RTCF	
	♦VALG	
BYV43-40	♦MULB	375 -176
♦PHIN	♦RTCF	
	♦VALG	
BYV43-40A	♦MULB	375 -177
♦PHIN	♦RTCF	
BYV43-45	♦MULB	375 -179
♦PHIN	♦RTCF	
	♦VALG	
BYV52-50	♦THEF	272 - 63
BYV52-100	♦THEF	272 - 75
BYV52-150	♦THEF	272 - 89
BYV52-200	♦THEF	272 - 95
BYV54-50	♦THEF	272 -198
BYV54-100	♦THEF	272 -202
BYV54-150	♦THEF	273 - 11
BYV54-200	♦THEF	273 - 13
BYV54V50	♦THEF	272 -199
BYV54V100	♦THEF	272 -203
BYV54V150	♦THEF	273 - 12
BYV54V200	♦THEF	273 - 14
BYV61	♦ALGG	252 - 39
BYV62	♦ALGG	252 -214
BYV63	♦ALGG	253 -181
BYV72-50	♦MULB	300 - 22
♦PHIN	♦RTCF	
	♦VALG	
BYV72-100	♦MULB	300 - 53
♦PHIN	♦RTCF	
	♦VALG	
BYV72-150	♦MULB	300 - 66
♦PHIN	♦RTCF	
	♦VALG	
BYV72-200	♦MULB	300 - 86
♦PHIN	♦RTCF	
	♦VALG	
BYV79-50	♦MULB	296 - 3

cont.next page

Δ-Registered with JEDEC by this manufacturer

♦-Mfr's data sheet available in microfilm service

1. TYPE No. CROSS INDEX

IN TYPE NUMBER SEQUENCE

TYPE No.	MFRS	Pg&Line
BYV79-50		
(cont.)	♦PHIN	
	♦RTCF	
	♦VALG	
BYV79-100	♦MULB	296 - 6
	♦PHIN	
	♦RTCF	
	♦VALG	
BYV79-150	♦MULB	296 - 7
	♦PHIN	
	♦RTCF	
	♦VALG	
BYV79-200	♦MULB	296 - 11
	♦PHIN	
	♦RTCF	
	♦VALG	
BYV92-200	♦MULB	301 - 3
	♦PHIN	
	♦RTCF	
	VALG	
BYV92-300	♦MULB	301 - 10
	♦PHIN	
	♦RTCF	
	VALG	
BYV92-400	♦MULB	301 - 18
	♦PHIN	
	♦RTCF	
	VALG	
BYV95A	♦MULB	294 - 48
	♦PHIN	
	♦RTCF	
	VALG	
BYV95B	♦MULB	294 -101
	♦PHIN	
	♦RTCF	
	VALG	
BYV95C	♦MULB	294 -134
	♦PHIN	
	♦RTCF	
	VALG	
BYV96D	♦MULB	294 -152
	♦PHIN	
	♦RTCF	
	VALG	
BYV96E	♦MULB	403 - 53
	♦PHIN	
	♦RTCF	
	VALG	
BYW07-50	♦THEF	252 - 61
BYW07-100	♦THEF	253 - 28
BYW07-150	♦THEF	253 -211
BYW07-200	♦THEF	254 - 32
BYW08-50	♦THEF	257 -135
BYW08-100	♦THEF	258 - 43
BYW08-150	♦THEF	258 -193
BYW08-200	♦THEF	259 - 28
BYW14-100	THEF	250 -128
BYW14-200	THEF	250 -163
BYW14-400	THEF	250 -199
BYW14-600	THEF	251 - 4
BYW14-800	THEF	251 - 13
BYW15-100	THEF	250 -127
BYW15-200	THEF	250 -160
BYW15-400	THEF	250 -195
BYW15-600	THEF	251 - 2
BYW15-800	THEF	251 - 12
BYW16-100	THEF	250 -125
BYW16-200	THEF	250 -147
BYW16-400	THEF	250 -179
BYW16-600	THEF	250 -211
BYW16-800	THEF	251 - 9
BYW17-100	THEF	288 - 42
BYW17-200	THEF	288 -122
BYW17-400	THEF	288 -220
BYW17-600	THEF	289 - 82
BYW17-800	THEF	289 -150
BYW17-1000	THEF	402 -183
BYW17-1200	THEF	406 -126
BYW18-400	THEF	289 - 1
BYW18-600	THEF	289 - 83
BYW18-800	THEF	289 -151
BYW18-1000	THEF	402 -184
BYW19-800	♦MULB	262 - 18
	♦PHIN	
	♦RTCF	
	♦VALG	
BYW19-1000	♦MULB	262 - 20
	♦PHIN	
	♦RTCF	
	♦VALG	
BYW25	♦MULB	262 -118
	♦PHIN	
	♦RTCF	
	VALG	
BYW25-800	♦MULB	298 - 63
	♦PHIN	
	♦RTCF	
	VALG	
BYW25-1000	♦MULB	403 -123
	♦PHIN	
	♦RTCF	
	♦VALG	
BYW27-50	♦FGRS	280 - 13
	THEF	
BYW27-100	♦FGRS	280 - 90
	THEF	
BYW27-200	♦FGRS	280 -187
	THEF	
BYW27-400	♦FGRS	281 - 91
	THEF	
BYW27-600	♦FGRS	281 -205
	THEF	
BYW27-800	♦FGRS	282 - 71
	THEF	
BYW27-1000	♦FGRS	401 -201
	THEF	
BYW29-50	♦MULB	257 -105
	♦PHIN	RTCF
	SIEG	♦THEF
		♦VALG
BYW29-100	♦MULB	258 - 6
	♦PHIN	RTCF
	SIEG	♦THEF
		♦VALG
BYW29-150	♦MULB	258 -167
	♦PHIN	RTCF
	SIEG	♦THEF
		♦VALG
BYW29-200	MULB	259 - 3
	PHIN	RTCF
cont.next col.		

TYPE No.	MFRS	Pg&Line
BYW29-200		
(cont.)	SIEG	
	♦THEF	♦VALG
BYW30-50	♦FERB	257 -106
	♦MULB	♦PHIN
	♦RTCF	♦VALG
BYW30-100	♦FERB	258 - 7
	♦MULB	♦PHIN
	♦RTCF	♦VALG
BYW30-150	♦FERB	258 -168
	♦MULB	♦PHIN
	♦RTCF	♦VALG
BYW30-200	MULB	259 - 4
	PHIN	♦RTCF
		♦VALG
BYW31-50	♦FERB	257 -114
	♦MULB	♦PHIN
	♦RTCF	♦VALG
BYW31-100	♦FERB	258 - 19
	♦MULB	♦PHIN
	♦RTCF	♦VALG
BYW31-150	♦FERB	258 -178
	♦MULB	♦PHIN
	♦RTCF	♦VALG
BYW31-200	MULB	259 - 10
	PHIN	♦RTCF
		♦VALG
BYW32	♦ALGG	254 - 79
BYW33	♦ALGG	254 -138
BYW34	♦ALGG	254 -211
BYW35	♦ALGG	255 - 48
BYW36	♦ALGG	255 - 98
BYW51-50	♦THEF	296 -187
BYW51-100	♦THEF	296 -199
BYW51-150	♦THEF	296 -207
BYW51-200	♦THEF	272 - 92
BYW52	♦ALGG	254 - 97
BYW53	♦ALGG	255 - 13
BYW54	♦ALGG	255 -137
	♦MULB	♦PHIN
	♦RTCF	♦VALG
BYW55	♦ALGG	255 -214
	♦MULB	♦PHIN
	♦RTCF	♦VALG
BYW56	♦ALGG	256 - 67
	♦MULB	♦PHIN 402 - 98
	♦RTCF	♦VALG
BYW72	♦ALGG	254 - 80
BYW73	♦ALGG	254 -139
BYW74	♦ALGG	254 -212
BYW75	♦ALGG	255 - 49
BYW76	♦ALGG	255 - 99
BYW77-50	♦SSEI	257 -115
	♦THEF	
BYW77-100	♦SSEI	258 - 20
	♦THEF	
BYW77-150	♦SSEI	258 -179
	♦THEF	
BYW77-200	♦SSEI	259 - 11
	♦THEF	
BYW77P-50(A)	♦THEF	257 -116
BYW77P-100(A)		258 - 21
	♦THEF	
BYW77P-150(A)		258 -180
	♦THEF	
BYW77P-200(A)		259 - 12
	♦THEF	
BYW77PI-50(A)		257 -117
	♦THEF	
BYW77PI-100(A)		258 - 22
	♦THEF	
BYW77PI-150(A)		258 -181
	♦THEF	
BYW77PI-200(A)		259 - 13
	♦THEF	
BYW78-50	♦THEF	257 -136
BYW78-100	♦THEF	258 - 44
BYW78-150	♦THEF	258 -194
BYW78-200	♦THEF	259 - 29
BYW80-50	♦THEF	257 -118
BYW80-100	♦THEF	258 - 23
BYW80-150	♦THEF	258 -182
BYW80-200	♦THEF	259 - 14
BYW81-50	♦SSEI	257 -119
	♦THEF	
BYW81-100	♦SSEI	258 - 24
	♦THEF	
BYW81-150	♦SSEI	258 -183
	♦THEF	
BYW81-200	♦SSEI	259 - 15
	♦THEF	
BYW81P-50(A)	♦THEF	257 -107
BYW81P-100(A)		258 - 8
	♦THEF	
BYW81P-150(A)		258 -169
	♦THEF	
BYW81P-200(A)		259 - 5
	♦THEF	
BYW81PI-50(A)		257 -108
	♦THEF	
BYW81PI-100(A)		258 - 9
	♦THEF	
BYW81PI-150(A)		258 -170
	♦THEF	
BYW81PI-200(A)		259 - 6
	♦THEF	
BYW82	♦ALGG	254 - 98
BYW83	♦ALGG	255 - 14
BYW84	♦ALGG	255 -138
BYW85	♦ALGG	255 -215
BYW86	♦ALGG	256 - 68
		402 -155
BYW88-50	THEF	294 -184
BYW88-100	THEF	294 -214

TYPE No.	MFRS	Pg&Line
BYW88-200	THEF	295 - 28
BYW88-300	THEF	295 - 54
BYW88-400	THEF	295 - 81
BYW88-500	THEF	295 -102
BYW88-600	THEF	295 -128
BYW88-800	THEF	295 -164
BYW88-1000	THEF	403 - 66
BYW92-50	♦FERB	257 -137
	♦MULB	♦PHIN
	♦RTCF	♦SSEI
	♦THEF	VALG
BYW92-100	♦FERB	258 - 45
	♦MULB	♦PHIN
	♦RTCF	♦SSEI
	♦THEF	VALG
BYW92-150	♦FERB	258 -195
	♦MULB	♦PHIN
	♦RTCF	♦SSEI
	♦THEF	VALG
BYW92-200	♦MULB	259 - 30
	PHIN	♦RTCF
	♦SSEI	♦THEF
		VALG
BYW93-50	MULB	257 -138
	♦PHIN	♦RTCF
		VALG
BYW93-100	MULB	258 - 46
	♦PHIN	♦RTCF
		VALG
BYW93-150	MULB	258 -196
	♦PHIN	♦RTCF
		VALG
BYW93-200	MULB	259 - 31
	PHIN	♦RTCF
		VALG
BYW94-50	MULB	257 -139
	PHIN	RTCF
		VALG
BYW94-50U	MULB	257 -140
	PHIN	RTCF
		VALG
BYW94-100	MULB	258 - 47
	PHIN	RTCF
		VALG
BYW94-100U	MULB	258 - 48
	PHIN	RTCF
		VALG
BYW94-150	MULB	258 -197
	PHIN	RTCF
		VALG
BYW94-150U	MULB	258 -198
	PHIN	RTCF
		VALG
BYW94-200	MULB	259 - 32
	PHIN	RTCF
		VALG
BYW94-200U	MULB	259 - 33
	PHIN	RTCF
		VALG
BYW95A	♦MULB	282 -177
	♦PHIN	♦RTCF
		VALG
BYW95B	♦MULB	282 -198
	♦PHIN	♦RTCF
		VALG
BYW95C	♦MULB	282 -220
	♦PHIN	♦RTCF
		VALG
BYW96D	♦MULB	283 - 21
	♦PHIN	♦RTCF
		VALG
BYW96E	♦MULB	402 - 28
	♦PHIN	♦RTCF
		VALG
BYW98-50	♦THEF	257 -120
BYW98-100	♦THEF	258 - 25
BYW98-150	♦THEF	258 -184
BYW98-200	♦THEF	259 - 16
BYW99P-50(A)	♦THEF	272 - 61
BYW99P-100(A)		272 - 73
	♦THEF	
BYW99P-150(A)		272 - 87
	♦THEF	
BYW99P-200(A)		272 - 93
	♦THEF	
BYW100-50	♦THEF	257 -102
BYW100-100	♦THEF	257 -103
BYW100-150	♦THEF	258 -166
BYW100-200	♦THEF	259 - 2
BYX10	CEN	276 - 47
	♦MULB	♦PHIN
	♦RTCF	♦VALG
BYX13-400	♦MULB	297 -169
	♦PHIN	♦RTCF
		♦VALG
BYX13-800	♦MULB	297 -219
	♦PHIN	♦RTCF
		♦VALG
BYX13-1200	♦MULB	406 -197
	♦PHIN	♦RTCF
		♦VALG
BYX13-1600	♦MULB	412 -113
	♦PHIN	♦RTCF
		♦VALG
BYX14-400	♦MULB	307 -159
	♦PHIN	♦RTCF
		♦VALG
BYX14-800	♦MULB	308 - 29
	♦PHIN	♦RTCF
		♦VALG
BYX14-1200	♦MULB	407 -186
	♦PHIN	♦RTCF
		♦VALG

TYPE No.	MFRS	Pg&Line
BYX15	♦MULB	302 - 32
	♦PHIN	♦RTCF
		♦VALG
BYX16	♦MULB	302 - 33
	♦PHIN	♦RTCF
		♦VALG
BYX22-200	♦MULB	283 - 61
	♦PHIN	♦RTCF
		♦VALG
BYX22-400	♦MULB	283 - 62
	♦PHIN	♦RTCF
		♦VALG
BYX22-600	♦MULB	283 - 64
	♦PHIN	♦RTCF
		VALG
BYX22-800	♦MULB	283 - 65
	♦PHIN	♦RTCF
		♦VALG
BYX22-1200	♦MULB	406 - 79
	♦PHIN	♦RTCF
		VALG
BYX25-600	♦MULB	297 -206
	♦PHIN	♦RTCF
		VALG
BYX25-800	♦MULB	298 - 4
	♦PHIN	♦RTCF
		VALG
BYX25-1000	♦MULB	403 -117
	♦PHIN	♦RTCF
		VALG
BYX25-1200	♦MULB	406 -195
	♦PHIN	RTCF
		VALG
BYX25-1400	♦MULB	409 -119
	♦PHIN	RTCF
		VALG
BYX30-200	♦MULB	259 - 78
	♦PHIN	♦RTCF
		♦VALG
BYX30-300	♦MULB	259 -191
	♦PHIN	♦RTCF
		♦VALG
BYX30-400	♦MULB	260 - 45
	♦PHIN	♦RTCF
		♦VALG
BYX30-500	♦MULB	260 -124
	♦PHIN	♦RTCF
		♦VALG
BYX30-600	♦MULB	260 -171
	♦PHIN	♦RTCF
		♦VALG
BYX32-400	♦MULB	307 -152
	♦PHIN	♦RTCF
		♦VALG
BYX32-600	♦MULB	307 -199
	♦PHIN	♦RTCF
		♦VALG
BYX32-800	♦MULB	308 - 23
	♦PHIN	♦RTCF
		♦VALG
BYX32-1000	♦MULB	404 - 88
	♦PHIN	♦RTCF
		♦VALG
BYX32-1200	♦MULB	407 -181
	♦PHIN	♦RTCF
		♦VALG
BYX32-1600	♦MULB	413 - 4
	♦PHIN	♦RTCF
		♦VALG
BYX33-400	♦MULB	309 -161
	♦PHIN	♦RTCF
		♦VALG
BYX33-800	♦MULB	309 -219
	♦PHIN	♦RTCF
		♦VALG
BYX33-1200	♦MULB	408 - 24
	♦PHIN	♦RTCF
		♦VALG
BYX33-1600	♦MULB	413 - 34
	♦PHIN	♦RTCF
		♦VALG
BYX34-200	♦MULB	304 - 64
	♦PHIN	♦RTCF
		♦VALG
BYX34-300	♦MULB	304 - 90
	♦PHIN	♦RTCF
		♦VALG
BYX34-400	♦MULB	304 -112
	♦PHIN	♦RTCF
		♦VALG
BYX34-500	♦MULB	304 -133
	♦PHIN	♦RTCF
		♦VALG
BYX35	♦MULB	431 - 98
	♦PHIN	♦RTCF
		♦VALG
BYX38-300	♦MULB	292 - 27
	♦PHIN	♦RTCF
		♦VALG
BYX38-600	♦MULB	292 -124
	♦PHIN	♦RTCF
		♦VALG
BYX38-900	♦MULB	292 -190
	♦PHIN	♦RTCF
		♦VALG
BYX38-1200	♦MULB	406 -149
	♦PHIN	♦RTCF
		♦VALG
BYX39-600	♦MULB	293 -188
	♦PHIN	♦RTCF
		♦VALG
BYX39-800	♦MULB	293 -190
	♦PHIN	♦RTCF
		♦VALG

TYPE No.	MFRS	Pg&Line
BYX39-1000	♦MULB	403 - 42
	♦PHIN	♦RTCF
		♦VALG
BYX39-1200	♦MULB	406 -158
	♦PHIN	♦RTCF
		♦VALG
BYX39-1400	♦MULB	409 -103
	♦PHIN	♦RTCF
		♦VALG
BYX42-300	♦MULB	295 - 51
	♦PHIN	♦RTCF
		♦VALG
BYX42-600	♦MULB	295 -125
	♦PHIN	♦RTCF
		♦VALG
BYX42-900	♦MULB	295 -178
	♦PHIN	♦RTCF
		♦VALG
BYX42-1200	♦MULB	406 -176
	♦PHIN	♦RTCF
		♦VALG
BYX45-600R	♦MULB	284 -208
	♦PHIN	♦RTCF
	SLCB	♦VALG
BYX45-800R	♦MULB	285 - 66
	♦PHIN	♦RTCF
	SLCB	♦VALG
BYX45-1000R	♦MULB	402 - 67
	♦PHIN	♦RTCF
	SLCB	♦VALG
BYX45-1200R	♦MULB	406 - 82
	♦PHIN	♦RTCF
		♦VALG
BYX45-1400R	♦MULB	409 - 78
	♦PHIN	♦RTCF
		♦VALG
BYX46-200	♦MULB	259 - 79
	PHIN	♦RTCF
		VALG
BYX46-300	♦MULB	259 -192
	PHIN	♦RTCF
		VALG
BYX46-400	♦MULB	260 - 46
	PHIN	♦RTCF
		VALG
BYX46-500	♦MULB	260 -125
	PHIN	♦RTCF
		VALG
BYX46-600	♦MULB	260 -172
	PHIN	♦RTCF
		VALG
BYX49-300	♦MULB	292 - 24
	♦PHIN	♦RTCF
		♦VALG
BYX49-600	♦MULB	292 -119
	♦PHIN	♦RTCF
		♦VALG
BYX49-900	♦MULB	289 -173
	♦PHIN	♦RTCF
		♦VALG
BYX49-1200	♦MULB	406 -146
	♦PHIN	♦RTCF
		♦VALG
BYX50-200	♦MULB	259 - 53
	♦PHIN	♦RTCF
		♦VALG
BYX50-300	♦MULB	259 -182
	♦PHIN	♦RTCF
		♦VALG
BYX50-400	♦MULB	260 - 22
	♦PHIN	♦RTCF
		♦VALG
BYX52-300	♦MULB	301 -162
	PHIN	♦RTCF
		♦VALG
BYX52-600	♦MULB	301 -220
	PHIN	♦RTCF
		♦VALG
BYX52-900	MULB	302 - 42
	PHIN	RTCF
		VALG
BYX52-1200	♦MULB	407 - 36
	PHIN	♦RTCF
		♦VALG
BYX55-100	♦SSEI	238 -179
BYX55-200	♦SSEI	239 - 55
BYX55-300	♦SSEI	239 -113
BYX55-350	♦MULB	259 -209
	♦PHIN	♦RTCF
		♦VALG
BYX55-400	♦SSEI	239 -161
BYX55-500	♦SSEI	239 -208
BYX55-600	♦MULB	260 -138
	♦PHIN	♦RTCF
	♦SSEI	♦VALG
BYX56-600	♦MULB	302 -107
	♦PHIN	♦RTCF
		♦VALG
BYX56-800	♦MULB	302 -108
	♦PHIN	♦RTCF
		♦VALG
BYX56-1000	♦MULB	403 -195
	♦PHIN	♦RTCF
		♦VALG
BYX56-1200	♦MULB	407 - 46
	♦PHIN	♦RTCF
		♦VALG
BYX56-1400	♦MULB	409 -160
	♦PHIN	♦RTCF
		♦VALG
BYX58-50	THEF	250 - 94
BYX58-100	THEF	250 -126
BYX58-200	THEF	250 -148
BYX58-300	THEF	250 -174

1. TYPE No. CROSS INDEX

IN TYPE NUMBER SEQUENCE

TYPE No.	MFRS	Pg&Line
BYX58-400	THEF	250 -180
BYX61-50	♦SSEI	257 -148
	♦THEF	
BYX61-100	♦SSEI	258 - 59
	♦THEF	
BYX61-200	♦SSEI	259 - 54
	♦THEF	
BYX61-300	♦SSEI	259 -183
	♦THEF	
BYX61-400	♦SSEI	260 - 23
	♦THEF	
BYX62-600	♦SSEI	260 -173
	♦THEF	
BYX62-800	♦SSEI	261 - 75
BYX62-1000	♦SSEI	240 -116
BYX63-600	♦SSEI	260 -174
	♦THEF	
BYX63-800	♦SSEI	240 - 71
BYX63-1000	♦SSEI	240 -117
BYX64-600	♦SSEI	260 -175
	♦THEF	
BYX64-800	♦SSEI	240 - 72
BYX64-1000	♦SSEI	240 -118
BYX65-50	♦THEF	257 -149
BYX65-100	♦SSEI	258 - 60
	♦THEF	
BYX65-200	♦SSEI	259 - 55
	♦THEF	
BYX65-300	♦SSEI	259 -184
	♦THEF	
BYX65-400	♦SSEI	260 - 24
	♦THEF	
BYX66-500	THEF	260 -136
BYX66-600	♦THEF	261 - 22
BYX66-700	THEF	261 - 35
BYX66-800	♦THEF	261 - 85
BYX66-900	THEF	261 -100
BYX66-1000	♦THEF	261 -135
BYX67-500	THEF	260 -137
BYX67-600	♦THEF	261 - 23
BYX67-700	THEF	261 - 36
BYX67-800	♦THEF	261 - 86
BYX67-900	THEF	261 -101
BYX67-1000	♦THEF	261 -136
BYX71-350	♦MULB	262 - 16
♦PHIN	RTCF	
	♦VALG	
BYX71-600	♦MULB	262 - 17
♦PHIN	RTCF	
	♦VALG	
BYX72-150	♦MULB	294 - 25
♦PHIN	RTCF	
	♦VALG	
BYX72-300	♦MULB	294 - 67
♦PHIN	RTCF	
	♦VALG	
BYX72-500	♦MULB	294 -113
♦PHIN	RTCF	
	♦VALG	
BYX82	♦ALGG	254 - 99
BYX83	♦ALGG	255 - 15
BYX84	♦ALGG	255 -139
BYX85	♦ALGG	255 -216
BYX86	♦ALGG	256 - 69
		402 - 58
BYX90	♦MULB	425 -145
♦PHIN	RTCF	
	♦VALG	
BYX90G	♦MULB	257 - 39
♦PHIN	♦RTCF	
	♦VALG	
BYX91-90K	♦MULB	433 -121
♦PHIN	♦RTCF	
	♦VALG	
BYX91-120K	♦MULB	433 -161
♦PHIN	♦VALG	
BYX91-150K	♦MULB	433 -193
♦PHIN	♦VALG	
BYX91-180K	♦MULB	433 -201
♦PHIN	♦VALG	
BYX92-50	THEF	250 - 91
BYX92-100	THEF	250 -122
BYX92-200	THEF	250 -140
BYX92-300	THEF	250 -168
BYX92-400	THEF	250 -177
BYX96-100	♦SSEI	300 - 35
BYX96-200	♦SSEI	300 - 68
BYX96-300	♦MULB	300 -105
♦PHIN	♦RTCF	
	♦VALG	
BYX96-400	♦SSEI	300 -109
BYX96-600	♦MULB	300 -150
♦PHIN	♦RTCF	
♦SSEI	♦VALG	
BYX96-800	♦SSEI	300 -156
BYX96-900	♦MULB	298 - 9
♦PHIN	♦RTCF	
	♦VALG	
BYX96-1000	♦SSEI	403 -149
BYX96-1200	♦MULB	407 - 6
♦PHIN	♦RTCF	
♦SSEI	♦VALG	
BYX96-1400	♦SSEI	409 -134
BYX96-1600	♦MULB	412 -129
♦PHIN	♦RTCF	
	♦VALG	
BYX97-300	♦MULB	301 -163
♦PHIN	♦VALG	
BYX97-600	♦MULB	302 - 1
♦PHIN	♦VALG	
BYX97-900	♦MULB	302 - 43
♦PHIN	♦VALG	
BYX97-1200	♦MULB	407 - 37
♦PHIN	♦VALG	

TYPE No.	MFRS	Pg&Line
BYX97-1600	♦MULB	412 -143
	♦PHIN	♦VALG
BYX98-300	♦MULB	292 - 28
	♦PHIN	♦RTCF
		♦VALG
BYX98-600	♦MULB	292 -126
	♦PHIN	♦RTCF
		♦VALG
BYX98-900	♦MULB	291 - 82
	♦PHIN	♦RTCF
		♦VALG
BYX98-1200	♦MULB	406 -151
	♦PHIN	♦RTCF
		♦VALG
BYX99-300	♦MULB	296 -113
	♦PHIN	♦RTCF
		♦VALG
BYX99-600	♦MULB	296 -166
	♦PHIN	♦RTCF
		♦VALG
BYX99-900	♦MULB	296 - 15
	♦PHIN	♦RTCF
		♦VALG
BYX99-1200	♦MULB	406 -184
	♦PHIN	♦RTCF
		♦VALG
BYY15	♦MULB	301 -193
	♦PHIN	♦RTCF
		♦VALG
BYY16	♦MULB	297 -178
	♦PHIN	♦RTCF
		♦VALG
BYY20	♦MULB	294 -199
	♦PHIN	♦RTCF
		♦VALG
BYY21	♦MULB	294 -200
	♦PHIN	♦RTCF
		♦VALG
BYY22	♦MULB	296 - 99
	♦PHIN	♦RTCF
		♦VALG
BYY23	♦MULB	296 -100
	♦PHIN	♦RTCF
		♦VALG
BYY24	♦MULB	296 -142
	♦PHIN	♦RTCF
		♦VALG
BYY25	♦MULB	296 -143
	♦PHIN	♦RTCF
		♦VALG
BYY57/75H	♦AEGG	302 - 55
BYY57/150H	♦AEGG	302 - 62
BYY57/300H	♦AEGG	302 - 75
BYY57/500H	♦AEGG	302 - 88
BYY57/700H	♦AEGG	302 - 99
BYY58/75H	♦AEGG	302 - 56
BYY58/150H	♦AEGG	302 - 63
BYY58/300H	♦AEGG	302 - 76
BYY58/500H	♦AEGG	302 - 89
BYY58/700H	♦AEGG	302 -100
BYY77	♦MULB	302 - 9
	♦PHIN	♦RTCF
		♦VALG
BYY78	♦MULB	302 - 10
	♦PHIN	♦RTCF
		♦VALG
BYZ14	♦MULB	301 -147
	♦PHIN	♦RTCF
		♦VALG
BYZ15	♦MULB	301 -148
	♦PHIN	♦RTCF
		♦VALG
BZ3.6	CEN	166 -155
BZ3.9	CEN	167 -117
BZ4.3	CEN	168 -127
BZ4.7	CEN	169 -154
BZ5.1	CEN	171 - 32
BZ5.6	CEN	172 -102
BZ6.2	CEN	174 - 80
BZ6.8	CEN	177 -142
BZ7.5	CEN	179 -137
BZ8.2	CEN	181 -112
BZ9.1	CEN	184 -131
BZ050	NJRC	171 - 13
BZ052	NJRC	172 - 30
BZ054	NJRC	172 - 63
BZ056	NJRC	173 - 59
BZ058	NJRC	173 -162
BZ061	NJRC	174 - 28
BZ063	NJRC	176 - 20
BZ065	NJRC	177 - 71
BZ067	NJRC	177 -117
BZ069	NJRC	179 - 11
BZ071	NJRC	179 - 67
BZ073	NJRC	179 - 93
BZ075	NJRC	180 - 97
BZ077	NJRC	181 - 31
BZ079	NJRC	181 - 52
BZ081	NJRC	181 - 94
BZ083	NJRC	183 - 4
BZ085	NJRC	183 -102
BZ088	NJRC	183 -207
BZ090	NJRC	184 - 93
BZ092	NJRC	186 - 38
BZ094	NJRC	186 - 88
BZ096	NJRC	186 -118
BZ098	NJRC	186 -154
BZ100	NJRC	187 -171
BZ102-0V7	♦APD	163 - 27
BZ102-1V4	♦APD	163 - 73
BZ102-2V1	♦APD	163 -156
BZ102-2V8	♦APD	165 - 10
BZ102-3V4	♦APD	166 -124
BZ105	NJRC	188 -121

TYPE No.	MFRS	Pg&Line
BZ110	NJRC	189 - 85
BZ115	NJRC	190 - 29
BZ120	NJRC	191 - 53
BZ125	NJRC	192 - 8
BZ130	NJRC	193 - 4
BZ135	NJRC	193 -142
BZ140	NJRC	194 - 5
BZ145	NJRC	194 - 81
BZ147	BELI	179 -156
BZ148	BELI	181 -138
BZ150	NJRC	195 - 53
BZ157	NJRC	196 - 9
BZ162	NJRC	197 - 61
BZ167	NJRC	197 - 81
BZ172	NJRC	197 -176
BZ177	NJRC	197 -183
BZ182	NJRC	199 - 79
BZ187	NJRC	199 -104
BZ192	NJRC	199 -208
BZ197	NJRC	200 - 13
BZ210	NJRC	201 - 85
BZ220	NJRC	202 - 54
BZ230	NJRC	202 -194
BZ240	NJRC	203 -152
BZ250	NJRC	204 -117
BZ260	NJRC	204 -149
BZ270	NJRC	205 - 90
BZ280	NJRC	206 - 53
BZ290	NJRC	206 - 88
BZ300	NJRC	207 - 16
BZ310	NJRC	207 -152
BZ320	NJRC	207 -171
BZ330	NJRC	208 -109
BZ340	NJRC	209 - 45
BZ350	NJRC	209 - 66
BZ752	♦RTN	172 -127
BZ752F	♦RTN	172 -128
BZ752T	♦RTN	172 -129
BZ758	♦RTN	187 - 9
BZ758F	♦RTN	187 - 10
BZ758T	♦RTN	187 - 11
BZ821T	♦RTN	174 -128
BZ821TF	♦RTN	174 -129
BZ821TT	♦RTN	174 -130
BZ963	♦RTN	190 -133
BZ963F	♦RTN	190 -134
BZ963T	♦RTN	190 -135
BZ965	♦RTN	194 -134
BZ965F	♦RTN	194 -135
BZ965T	♦RTN	194 -136
BZ969	♦RTN	201 -146
BZ969F	♦RTN	201 -147
BZ969T	♦RTN	201 -148
BZ971	♦RTN	204 -194
BZ971F	RTN	204 -195
BZ971T	RTN	204 -196
BZD10C3V3	MSC	166 - 91
	♦SIEG	
BZD10C3V6	MSC	167 - 59
	♦SIEG	
BZD10C3V9	MSC	168 - 39
	♦SIEG	
BZD10C4V3	MSC	169 - 62
	♦SIEG	
BZD10C4V7	MSC	170 -118
	♦SIEG	
BZD10C5V1	MSC	171 -200
	♦SIEG	
BZD10C5V6	MSC	173 - 88
	♦SIEG	
BZD10C6V2	MSC	175 -151
	♦SIEG	
BZD10C6V8	MSC	178 -152
	♦SIEG	
BZD10C7V5	MSC	180 -145
	♦SIEG	
BZD10C8V2	MSC	182 -133
	♦SIEG	
BZD10C9V1	MSC	185 -166
	♦SIEG	
BZD10C10	MSC	188 - 25
	♦SIEG	
BZD10C11	MSC	189 -133
	♦SIEG	
BZD10C12	MSC	191 -108
	♦SIEG	
BZD10C13	MSC	193 - 52
	♦SIEG	
BZD10C15	MSC	195 -113
	♦SIEG	
BZD10C16	MSC	196 -196
	♦SIEG	
BZD10C18	MSC	199 - 12
	♦SIEG	
BZD10C20	MSC	201 - 3
	♦SIEG	
BZD10C22	MSC	202 -105
	♦SIEG	
BZD10C24	MSC	203 -200
	♦SIEG	
BZD10C27	MSC	205 -149
	♦SIEG	
BZD10C30	MSC	207 - 74
	♦SIEG	
BZD10C33	MSC	208 -166
	♦SIEG	
BZD10C36	MSC	210 - 17
	♦SIEG	
BZD10C39	MSC	211 - 49
	♦SIEG	
BZD10C43	MSC	212 - 63
	♦SIEG	
BZD10C47	MSC	213 - 80
	♦SIEG	

TYPE No.	MFRS	Pg&Line
BZD10C51	MSC	214 - 76
	♦SIEG	
BZD10C56	MSC	215 - 66
	♦SIEG	
BZD10C62	MSC	216 - 70
	♦SIEG	
BZD10C68	MSC	217 - 51
	♦SIEG	
BZD10C75	MSC	218 - 35
	♦SIEG	
BZD10C82	MSC	219 - 12
	♦SIEG	
BZD10C91	MSC	219 -190
	♦SIEG	
BZD10C100	MSC	220 -152
	♦SIEG	
BZD10C110	MSC	221 -110
	♦SIEG	
BZD10C120	MSC	222 - 62
	♦SIEG	
BZD10C130	MSC	223 - 17
	♦SIEG	
BZD10C150	MSC	224 - 55
	♦SIEG	
BZD10C160	MSC	224 -177
	♦SIEG	
BZD10C180	MSC	226 - 12
	♦SIEG	
BZD10C200	MSC	227 - 7
	♦SIEG	
BZT03/D9V1	♦ALGG	186 - 15
BZT03/D10	♦ALGG	188 - 84
BZT03/D11	♦ALGG	189 -193
BZT03/D12	♦ALGG	191 -172
BZT03/D13	♦ALGG	193 -112
BZT03/D15	♦ALGG	195 -168
BZT03/D16	♦ALGG	197 - 43
BZT03/D18	♦ALGG	199 - 68
BZT03/D20	♦ALGG	201 - 61
BZT03/D22	♦ALGG	202 -165
BZT03/D24	♦ALGG	204 - 53
BZT03/D27	♦ALGG	206 - 3
BZT03/D30	♦ALGG	207 -133
BZT03/D33	♦ALGG	209 - 20
BZT03/D36	♦ALGG	210 - 74
BZT03/D39	♦ALGG	211 -106
BZT03/D43	♦ALGG	212 -117
BZT03/D47	♦ALGG	213 -134
BZT03/D51	♦ALGG	214 -129
BZT03/D56	♦ALGG	215 -122
BZT03/D62	♦ALGG	216 -122
BZT03/D68	♦ALGG	217 -103
BZT03/D75	♦ALGG	218 - 89
BZT03/D82	♦ALGG	219 - 60
BZT03/D91	♦ALGG	220 - 39
BZT03/D100	♦ALGG	221 - 7
BZT03/D110	♦ALGG	221 -161
BZT03/D120	♦ALGG	222 -118
BZT03/D130	♦ALGG	223 - 68
BZT03/D150	♦ALGG	224 -101
BZT03/D160	♦ALGG	225 - 39
BZT03/D180	♦ALGG	226 - 62
BZT03/D200	♦ALGG	227 - 57
BZT03/D220	♦ALGG	227 - 82
BZT03/D240	♦ALGG	227 - 90
BZT03/D270	♦ALGG	227 -111
BZT03C7V5	♦APX	340 - 19
♦MULB	♦PHIN	
♦RTCF	♦VALG	
BZT03C8V2	♦APX	340 - 20
♦MULB	♦PHIN	
♦RTCF	♦VALG	
BZT03C9V1	♦ALGG	380 -165
♦APX	♦MULB	
♦PHIN	RTCF	
	♦VALG	
BZT03C10	♦ALGG	381 -169
♦APX	♦MULB	
♦PHIN	RTCF	
	♦VALG	
BZT03C11	♦ALGG	382 - 56
♦APX	♦MULB	
♦PHIN	RTCF	
	♦VALG	
BZT03C12	♦ALGG	382 -180
♦APX	♦MULB	
♦PHIN	RTCF	
	♦VALG	
BZT03C13	♦ALGG	383 - 86
♦APX	♦MULB	
♦PHIN	RTCF	
	♦VALG	
BZT03C15	♦ALGG	384 - 66
♦APX	♦MULB	
♦PHIN	RTCF	
	♦VALG	
BZT03C16	♦ALGG	384 -162
♦APX	♦MULB	
♦PHIN	RTCF	
	♦VALG	
BZT03C18	♦ALGG	385 -128
♦APX	♦MULB	
♦PHIN	RTCF	
	♦VALG	
BZT03C20	♦ALGG	386 - 74
♦APX	♦MULB	
♦PHIN	RTCF	
	♦VALG	
BZT03C22	♦ALGG	386 -182
♦APX	♦MULB	
♦PHIN	RTCF	
	♦VALG	
BZT03C24	♦ALGG	387 - 94
cont.next col.		

TYPE No.	MFRS	Pg&Line
BZT03C24		
(cont.)	♦APX	
♦MULB	♦PHIN	
RTCF	♦VALG	
BZT03C27	♦ALGG	388 - 37
♦APX	♦MULB	
♦PHIN	RTCF	
	♦VALG	
BZT03C30	♦ALGG	388 -152
♦APX	♦MULB	
♦PHIN	RTCF	
	♦VALG	
BZT03C33	♦ALGG	389 - 62
♦APX	♦MULB	
♦PHIN	RTCF	
	♦VALG	
BZT03C36	♦ALGG	389 -170
♦APX	♦MULB	
♦PHIN	RTCF	
	♦VALG	
BZT03C39	♦ALGG	390 - 62
♦APX	♦MULB	
♦PHIN	RTCF	
	♦VALG	
BZT03C43	♦ALGG	390 -167
♦APX	♦MULB	
♦PHIN	RTCF	
	♦VALG	
BZT03C47	♦ALGG	391 -104
♦APX	♦MULB	
♦PHIN	RTCF	
	♦VALG	
BZT03C51	♦ALGG	392 - 33
♦APX	♦MULB	
♦PHIN	RTCF	
	♦VALG	
BZT03C56	♦ALGG	215 -121
♦APX	♦MULB	
♦PHIN	♦RTCF	
	♦VALG	
BZT03C62	♦ALGG	393 - 73
♦APX	♦MULB	
♦PHIN	RTCF	
	♦VALG	
BZT03C68	♦ALGG	393 -167
♦APX	♦MULB	
♦PHIN	RTCF	
	♦VALG	
BZT03C75	♦ALGG	394 - 89
♦APX	♦MULB	
♦PHIN	RTCF	
	♦VALG	
BZT03C82	♦ALGG	394 -191
♦APX	♦MULB	
♦PHIN	RTCF	
	♦VALG	
BZT03C91	♦ALGG	395 -100
♦APX	♦MULB	
♦PHIN	RTCF	
	♦VALG	
BZT03C100	♦ALGG	396 - 13
♦APX	♦MULB	
♦PHIN	RTCF	
	♦VALG	
BZT03C110	♦ALGG	396 -128
♦APX	♦MULB	
♦PHIN	RTCF	
	♦VALG	
BZT03C120	♦ALGG	397 - 18
♦APX	♦MULB	
♦PHIN	RTCF	
	♦VALG	
BZT03C130	♦ALGG	397 -104
♦APX	♦MULB	
♦PHIN	RTCF	
	♦VALG	
BZT03C150	♦ALGG	398 - 47
♦APX	♦MULB	
♦PHIN	RTCF	
	♦VALG	
BZT03C160	♦ALGG	398 -123
♦APX	♦MULB	
♦PHIN	RTCF	
	♦VALG	
BZT03C180	♦ALGG	399 - 49
♦APX	♦MULB	
♦PHIN	RTCF	
	♦VALG	
BZT03C200	♦ALGG	399 -144
♦APX	♦MULB	
♦PHIN	RTCF	
	♦VALG	
BZT03C220	♦ALGG	399 -155
♦APX	♦MULB	
♦PHIN	RTCF	
	♦VALG	
BZT03C240	♦ALGG	399 -164
♦APX	♦MULB	
♦PHIN	RTCF	
	♦VALG	
BZT03C270	♦ALGG	399 -175
♦APX	♦MULB	
♦PHIN	RTCF	
	♦VALG	
BZV10	♦APX	177 - 6
♦MULB	♦PHIN	
RTCF	♦VALG	
BZV11	♦APX	177 - 7
♦MULB	♦PHIN	
RTCF	♦VALG	
BZV12	♦APX	177 - 8
♦MULB	♦PHIN	
RTCF	♦VALG	

Δ-Registered with JEDEC by this manufacturer

♦-Mfr's data sheet available in microfilm service

1. TYPE No. CROSS INDEX

IN TYPE NUMBER SEQUENCE

TYPE No.	MFRS	Pg&Line
BZV13	♦APX	177 - 9
♦MULB	♦PHIN	
RTCF	♦VALG	
BZV14	♦APX	177 - 10
♦MULB	♦PHIN	
RTCF	♦VALG	
BZV15C10	♦MULB	188 - 58
♦PHIN	♦RTCF	
	♦VALG	
BZV15C11	♦MULB	189 -171
♦PHIN	♦RTCF	
	♦VALG	
BZV15C12	♦MULB	191 -146
♦PHIN	♦RTCF	
	♦VALG	
BZV15C13	♦MULB	193 - 88
♦PHIN	♦RTCF	
	♦VALG	
BZV15C15	♦MULB	195 -143
♦PHIN	♦RTCF	
	♦VALG	
BZV15C16	♦MULB	197 - 22
♦PHIN	♦RTCF	
	♦VALG	
BZV15C18	♦MULB	199 - 41
♦PHIN	♦RTCF	
	♦VALG	
BZV15C20	♦MULB	201 - 34
♦PHIN	♦RTCF	
	♦VALG	
BZV15C22	♦MULB	202 -141
♦PHIN	♦RTCF	
	♦VALG	
BZV15C24	♦MULB	204 - 27
♦PHIN	♦RTCF	
	♦VALG	
BZV15C27	♦MULB	205 -181
♦PHIN	♦RTCF	
	♦VALG	
BZV15C30	♦MULB	207 -105
♦PHIN	♦RTCF	
	♦VALG	
BZV15C33	♦MULB	208 -198
♦PHIN	♦RTCF	
	♦VALG	
BZV15C36	♦MULB	210 - 47
♦PHIN	♦RTCF	
	♦VALG	
BZV15C39	♦MULB	211 - 84
♦PHIN	♦RTCF	
	♦VALG	
BZV15C43	♦MULB	212 - 95
♦PHIN	♦RTCF	
	♦VALG	
BZV15C47	♦MULB	213 -112
♦PHIN	♦RTCF	
	♦VALG	
BZV15C51	♦MULB	214 -107
♦PHIN	♦RTCF	
	♦VALG	
BZV15C56	♦MULB	215 - 96
♦PHIN	♦RTCF	
	♦VALG	
BZV15C62	♦MULB	216 -100
♦PHIN	♦RTCF	
	♦VALG	
BZV15C68	♦MULB	217 - 81
♦PHIN	♦RTCF	
	♦VALG	
BZV15C75	♦MULB	218 - 64
♦PHIN	♦RTCF	
	♦VALG	
BZV16C3V3	THEF	166 -107
BZV16C3V6	THEF	167 - 78
BZV16C3V9	THEF	168 - 68
BZV16C4V3	THEF	169 - 88
BZV16C4V7	THEF	170 -145
BZV16C5V1	THEF	172 - 19
BZV16C5V6	THEF	173 -117
BZV16C6V2	THEF	175 -182
BZV16C6V8	THEF	178 -188
BZV16C7V5	THEF	180 -181
BZV16C8V2	THEF	182 -171
BZV16C9V1	THEF	186 - 2
BZV16C10	THEF	188 - 71
BZV16C11	THEF	189 -184
BZV16C12	THEF	191 -159
BZV16C13	THEF	193 -100
BZV16C15	THEF	195 -155
BZV16C16	THEF	197 - 34
BZV16C18	THEF	199 - 54
BZV16C20	THEF	201 - 47
BZV16C22	THEF	202 -153
BZV16C24	THEF	204 - 40
BZV16C27	THEF	205 -195
BZV16C30	THEF	207 -120
BZV16C33	THEF	209 - 6
BZV16C36	THEF	210 - 60
BZV16C39	THEF	211 - 97
BZV16C43	THEF	212 -108
BZV16C47	THEF	213 -125
BZV16C51	THEF	214 -120
BZV16C56	THEF	215 -109
BZV16C62	THEF	216 -113
BZV16C68	THEF	217 - 94
BZV16C75	THEF	218 - 77
BZV16C82	THEF	219 - 51
BZV16C91	THEF	220 - 30
BZV16C100	THEF	220 -192
BZV16C110	THEF	396 -126
BZV16C120	THEF	397 - 16
BZV16C130	THEF	397 -102
BZV16C150	THEF	398 - 45
BZV16C160	THEF	398 -122

TYPE No.	MFRS	Pg&Line
BZV16C180	THEF	399 - 48
BZV16C200	THEF	399 -143
BZV27	THEF	174 -135
BZV27A	THEF	174 -136
BZV28	THEF	174 -137
BZV28A	THEF	174 -138
BZV29	THEF	174 -139
BZV29A	THEF	174 -140
BZV30	THEF	174 -141
BZV30A	THEF	174 -142
BZV31	THEF	174 -143
BZV31A	THEF	174 -144
BZV32	THEF	184 - 13
BZV32A	THEF	184 - 14
BZV32B	THEF	184 - 15
BZV33	THEF	184 - 16
BZV33A	THEF	184 - 17
BZV33B	THEF	184 - 18
BZV34	THEF	184 - 19
BZV34A	THEF	184 - 20
BZV34B	THEF	184 - 21
BZV35	THEF	184 - 22
BZV35A	THEF	184 - 23
BZV35B	THEF	184 - 24
BZV36	THEF	184 - 25
BZV36A	THEF	184 - 26
BZV36B	THEF	184 - 27
BZV37	♦RTCF	177 - 11
BZV38	♦PHIN	176 -150
	VALG	
BZV40C3V3	MSC	377 - 46
	♦SIEG	
BZV40C3V6	MSC	377 - 67
	♦SIEG	
BZV40C3V9	MSC	377 - 92
	♦SIEG	
BZV40C4V3	MSC	377 -131
	♦SIEG	
BZV40C4V7	MSC	378 - 10
	♦SIEG	
BZV40C5V1	MSC	378 - 57
	♦SIEG	
BZV40C5V6	MSC	378 - 97
	♦SIEG	
BZV40C6V2	MSC	378 -152
	♦SIEG	
BZV40C6V8	MSC	379 - 12
	♦SIEG	
BZV40C7V5	MSC	379 -124
	♦SIEG	
BZV40C8V2	MSC	380 - 45
	♦SIEG	
BZV40C8V7	MSC	380 -142
	♦SIEG	
BZV40C9V1	MSC	380 -173
	♦SIEG	
BZV40C10	MSC	381 - 72
	♦SIEG	
BZV40C11	MSC	381 -185
	♦SIEG	
BZV40C12	MSC	382 - 80
	♦SIEG	
BZV40C13	MSC	382 -196
	♦SIEG	
BZV40C14	MSC	383 - 96
	♦SIEG	
BZV40C15	MSC	383 -160
	♦SIEG	
BZV40C16	MSC	384 - 74
	♦SIEG	
BZV40C17	MSC	384 -171
	♦SIEG	
BZV40C18	MSC	385 - 26
	♦SIEG	
BZV40C19	MSC	385 -136
	♦SIEG	
BZV40C20	MSC	385 -180
	♦SIEG	
BZV40C22	MSC	386 - 85
	♦SIEG	
BZV40C24	MSC	387 - 1
	♦SIEG	
BZV40C25	MSC	387 -103
	♦SIEG	
BZV40C27	MSC	387 -139
	♦SIEG	
BZV40C28	MSC	388 - 41
	♦SIEG	
BZV40C30	MSC	388 - 59
	♦SIEG	
BZV40C33	MSC	388 -164
	♦SIEG	
BZV40C36	MSC	389 - 78
	♦SIEG	
BZV40C39	MSC	389 -182
	♦SIEG	
BZV40C43	MSC	390 - 93
	♦SIEG	
BZV40C47	MSC	391 - 25
	♦SIEG	
BZV40C51	MSC	391 -163
	♦SIEG	
BZV40C56	MSC	392 - 71
	♦SIEG	
BZV40C60	MSC	392 -165
	♦SIEG	
BZV40C62	MSC	392 -198
	♦SIEG	
BZV40C68	MSC	393 - 87
	♦SIEG	
BZV40C75	MSC	393 -198
	♦SIEG	
BZV40C82	MSC	394 -115
	♦SIEG	

TYPE No.	MFRS	Pg&Line
BZV40C87	MSC	394 -194
	♦SIEG	
BZV40C91	MSC	395 - 26
	♦SIEG	
BZV40C100	MSC	395 -116
	♦SIEG	
BZV40C110	MSC	396 - 52
	♦SIEG	
BZV40C120	MSC	396 -138
	♦SIEG	
BZV40C130	MSC	397 - 27
	♦SIEG	
BZV40C140	MSC	397 -113
	♦SIEG	
BZV40C150	MSC	397 -164
	♦SIEG	
BZV40C160	MSC	398 - 54
	♦SIEG	
BZV40C170	MSC	398 -127
	♦SIEG	
BZV40C180	MSC	398 -167
	♦SIEG	
BZV40C190	MSC	399 - 52
	♦SIEG	
BZV40C200	MSC	399 - 76
	♦SIEG	
BZV41C2V7	♦FERB	164 -189
BZV41C3V0	♦FERB	165 -128
BZV41C3V3	♦FERB	166 - 64
BZV41C3V6	♦FERB	167 - 28
BZV41C3V9	♦FERB	168 - 3
BZV41C4V3	♦FERB	169 - 26
BZV41C4V7	♦FERB	170 - 75
BZV41C5V1	♦FERB	171 -154
BZV41C5V6	♦FERB	173 - 35
BZV41C6V2	♦FERB	175 - 98
BZV41C6V8	♦FERB	178 - 72
BZV41C7V5	♦FERB	180 - 67
BZV41C8V2	♦FERB	182 - 50
BZV41C9V1	♦FERB	185 - 85
BZV41C10	♦FERB	187 -135
BZV41C11	♦FERB	189 - 62
BZV41C12	♦FERB	191 - 23
BZV41C13	♦FERB	192 -196
BZV41C15	♦FERB	195 - 27
BZV41C16	♦FERB	196 -126
BZV41C18	♦FERB	198 -137
BZV41C20	♦FERB	200 -132
BZV41C22	♦FERB	202 - 30
BZV41C24	♦FERB	203 -133
BZV41C27	♦FERB	205 - 67
BZV41C30	♦FERB	206 -203
BZV41C33	♦FERB	208 - 91
BZV41C36	♦FERB	209 -159
BZV41C39	♦FERB	210 -196
BZV41C43	♦FERB	212 - 9
BZV41C47	♦FERB	213 - 23
BZV43C	THEF	215 -173
BZV44C	THEF	215 -174
BZV45C	THEF	215 -175
BZV46-1V5	♦APX	163 - 84
♦MULB	♦PHIN	
RTCF	♦VALG	
BZV46-2V0	♦APX	163 -168
♦MULB	♦PHIN	
RTCF	♦VALG	
BZV46-C1V5	♦MULB	163 - 85
♦PHIN	♦RTCF	
	♦VALG	
BZV46-C2V0	♦MULB	163 -169
♦PHIN	♦RTCF	
	♦VALG	
BZV47C3V3	THEF	166 - 98
BZV47C3V6	THEF	167 - 67
BZV47C3V9	THEF	168 - 52
BZV47C4V3	THEF	169 - 72
BZV47C4V7	THEF	170 -129
BZV47C5V1	THEF	172 - 2
BZV47C5V6	THEF	173 -100
BZV47C6V2	THEF	175 -165
BZV47C6V8	THEF	178 -170
BZV47C7V5	THEF	180 -162
BZV47C8V2	THEF	182 -151
BZV47C9V1	THEF	185 -186
BZV47C10	THEF	188 - 50
BZV47C11	THEF	189 -163
BZV47C12	THEF	191 -138
BZV47C13	THEF	193 - 80
BZV47C15	THEF	195 -135
BZV47C16	THEF	197 - 17
BZV47C18	THEF	199 - 33
BZV47C20	THEF	201 - 26
BZV47C22	THEF	202 -133
BZV47C24	THEF	204 - 19
BZV47C27	THEF	205 -173
BZV47C30	THEF	207 - 97
BZV47C33	THEF	208 -190
BZV47C36	THEF	210 - 39
BZV47C39	THEF	211 - 76
BZV47C43	THEF	212 - 87
BZV47C47	THEF	213 -104
BZV47C51	THEF	214 - 99
BZV47C56	THEF	215 - 88
BZV47C62	THEF	216 - 92
BZV47C68	THEF	217 - 73
BZV47C75	THEF	218 - 56
BZV47C82	THEF	219 - 32
BZV47C91	THEF	220 - 11
BZV47C100	THEF	220 -173
BZV47C110	THEF	221 -133
BZV47C120	THEF	222 - 87
BZV47C130	THEF	223 - 38
BZV47C150	THEF	224 - 72
BZV47C160	THEF	225 - 11

TYPE No.	MFRS	Pg&Line
BZV47C180	THEF	226 - 33
BZV47C200	THEF	227 - 26
BZV48C3V3	THEF	377 - 47
BZV48C3V6	THEF	377 - 68
BZV48C3V9	THEF	377 - 93
BZV48C4V3	THEF	377 -132
BZV48C4V7	THEF	378 - 11
BZV48C5V1	THEF	378 - 58
BZV48C5V6	THEF	378 - 98
BZV48C6V2	THEF	378 -153
BZV48C6V8	THEF	379 - 13
BZV48C7V5	THEF	379 -125
BZV48C8V2	♦FGRS	380 - 46
	THEF	
BZV48C9V1	♦FGRS	380 -174
	THEF	
BZV48C10	♦FGRS	381 - 73
	THEF	
BZV48C11	♦FGRS	381 -186
	THEF	
BZV48C12	♦FGRS	382 - 81
	THEF	
BZV48C13	♦FGRS	382 -197
	THEF	
BZV48C15	♦FGRS	383 -161
	THEF	
BZV48C16	♦FGRS	384 - 75
	THEF	
BZV48C18	♦FGRS	385 - 27
	THEF	
BZV48C20	♦FGRS	385 -181
	THEF	
BZV48C22	♦FGRS	386 - 86
	THEF	
BZV48C24	♦FGRS	387 - 2
	THEF	
BZV48C27	♦FGRS	387 -140
	THEF	
BZV48C30	♦FGRS	388 - 60
	THEF	
BZV48C33	♦FGRS	388 -165
	THEF	
BZV48C36	♦FGRS	389 - 79
	THEF	
BZV48C39	♦FGRS	389 -183
	THEF	
BZV48C43	♦FGRS	390 - 94
	THEF	
BZV48C47	♦FGRS	391 - 26
	THEF	
BZV48C51	♦FGRS	391 -164
	THEF	
BZV48C56	♦FGRS	392 - 72
	THEF	
BZV48C62	♦FGRS	392 -199
	THEF	
BZV48C68	♦FGRS	393 - 88
	THEF	
BZV48C75	♦FGRS	394 - 1
	THEF	
BZV48C82	♦FGRS	394 -116
	THEF	
BZV48C91	♦FGRS	395 - 27
	THEF	
BZV48C100	♦FGRS	395 -117
	THEF	
BZV48C110	♦FGRS	396 - 53
	THEF	
BZV48C120	♦FGRS	396 -139
	THEF	
BZV48C130	♦FGRS	397 - 28
	THEF	
BZV48C150	♦FGRS	397 -165
	THEF	
BZV48C160	♦FGRS	398 - 55
	THEF	
BZV48C180	♦FGRS	398 -168
	THEF	
BZV48C200	♦FGRS	399 - 77
	THEF	
BZV49C0V8	SIEG	163 - 41
BZV49C2V4	♦APX	164 - 15
♦MULB	♦PHIN	
♦RTCF	SIEG	
	♦VALG	
BZV49C2V7	♦APX	164 -128
♦MULB	♦PHIN	
♦RTCF	SIEG	
	♦VALG	
BZV49C3V0	♦APX	165 - 52
♦MULB	♦PHIN	
♦RTCF	SIEG	
	♦VALG	
BZV49C3V3	♦APX	165 -178
♦MULB	♦PHIN	
♦RTCF	SIEG	
	♦VALG	
BZV49C3V6	♦APX	166 -150
♦MULB	♦PHIN	
♦RTCF	SIEG	
	♦VALG	
BZV49C3V9	♦APX	167 -110
♦MULB	♦PHIN	
♦RTCF	SIEG	
	♦VALG	
BZV49C4V3	♦APX	168 -121
♦MULB	♦PHIN	
♦RTCF	SIEG	
	♦VALG	
BZV49C4V7	♦APX	169 -145
♦MULB	♦PHIN	
♦RTCF	SIEG	
	♦VALG	

TYPE No.	MFRS	Pg&Line
BZV49C5V1	♦APX	171 - 25
♦MULB	♦PHIN	
♦RTCF	SIEG	
	♦VALG	
BZV49C5V6	♦APX	172 - 91
♦MULB	♦PHIN	
♦RTCF	SIEG	
	♦VALG	
BZV49C6V2	♦APX	174 - 54
♦MULB	♦PHIN	
♦RTCF	SIEG	
	♦VALG	
BZV49C6V8	♦APX	177 -129
♦MULB	♦PHIN	
♦RTCF	SIEG	
	♦VALG	
BZV49C7V5	♦APX	179 -128
♦MULB	♦PHIN	
♦RTCF	SIEG	
	♦VALG	
BZV49C8V2	♦APX	181 -100
♦MULB	♦PHIN	
♦RTCF	SIEG	
	♦VALG	
BZV49C9V1	♦APX	184 -121
♦MULB	♦PHIN	
♦RTCF	SIEG	
	♦VALG	
BZV49C10	♦APX	186 -173
♦MULB	♦PHIN	
♦RTCF	SIEG	
	♦VALG	
BZV49C11	♦APX	188 -150
♦MULB	♦PHIN	
♦RTCF	SIEG	
	♦VALG	
BZV49C12	♦APX	190 - 93
♦MULB	♦PHIN	
♦RTCF	SIEG	
	♦VALG	
BZV49C13	♦APX	192 - 89
♦MULB	♦PHIN	
♦RTCF	SIEG	
	♦VALG	
BZV49C15	♦APX	194 -103
♦MULB	♦PHIN	
♦RTCF	SIEG	
	♦VALG	
BZV49C16	♦APX	196 - 19
♦MULB	♦PHIN	
♦RTCF	SIEG	
	♦VALG	
BZV49C18	♦APX	198 - 11
♦MULB	♦PHIN	
♦RTCF	SIEG	
	♦VALG	
BZV49C20	♦APX	200 - 24
♦MULB	♦PHIN	
♦RTCF	SIEG	
	♦VALG	
BZV49C22	♦APX	201 -116
♦MULB	♦PHIN	
♦RTCF	SIEG	
	♦VALG	
BZV49C24	♦APX	203 - 36
♦MULB	♦PHIN	
♦RTCF	SIEG	
	♦VALG	
BZV49C27	♦APX	204 -168
♦MULB	♦PHIN	
♦RTCF	SIEG	
	♦VALG	
BZV49C30	♦APX	206 -107
♦MULB	♦PHIN	
♦RTCF	SIEG	
	♦VALG	
BZV49C33	♦APX	207 -188
♦MULB	♦PHIN	
♦RTCF	SIEG	
	♦VALG	
BZV49C36	♦APX	209 - 82
♦MULB	♦PHIN	
♦RTCF	SIEG	
	♦VALG	
BZV49C39	♦APX	210 -118
♦MULB	♦PHIN	
♦RTCF	SIEG	
	♦VALG	
BZV49C43	♦APX	211 -146
♦MULB	♦PHIN	
♦RTCF	SIEG	
	♦VALG	
BZV49C47	♦APX	212 -152
♦MULB	♦PHIN	
♦RTCF	SIEG	
	♦VALG	
BZV49C51	♦APX	214 -147
♦MULB	♦PHIN	
♦RTCF	♦VALG	
BZV49C56	♦APX	215 -152
♦MULB	♦PHIN	
♦RTCF	♦VALG	
BZV49C62	♦APX	216 -130
♦MULB	♦PHIN	
♦RTCF	♦VALG	
BZV49C68	♦APX	217 -127
♦MULB	♦PHIN	
♦RTCF	♦VALG	
BZV49C75	♦APX	218 - 99
♦MULB	♦PHIN	
♦RTCF	♦VALG	
BZV53A(A)	♦THEF	378 -194
BZV53B(A)	♦THEF	378 -195
BZV54A(A)	♦THEF	378 -196

Δ-Registered with JEDEC by this manufacturer

♦-Mfr's data sheet available in microfilm service

1. TYPE No. CROSS INDEX

IN TYPE NUMBER SEQUENCE

TYPE No.	MFRS	Pg&Line
BZV54B(A)	♦THEF	379 - 1
BZV55C2V4	♦MULB	164 - 57
♦PHIN	♦RTCF	
	♦VALG	
BZV55C2V7	♦MULB	164 -177
♦PHIN	♦RTCF	
	♦VALG	
BZV55C3V0	♦MULB	165 -115
♦PHIN	♦RTCF	
	♦VALG	
BZV55C3V3	♦MULB	166 - 47
♦PHIN	♦RTCF	
	♦VALG	
BZV55C3V6	♦MULB	167 - 13
♦PHIN	♦RTCF	
	♦VALG	
BZV55C3V9	♦MULB	167 -190
♦PHIN	♦RTCF	
	♦VALG	
BZV55C4V3	♦MULB	169 - 4
♦PHIN	♦RTCF	
	♦VALG	
BZV55C4V7	♦MULB	170 - 50
♦PHIN	♦RTCF	
	♦VALG	
BZV55C5V1	♦MULB	171 -132
♦PHIN	♦RTCF	
	♦VALG	
BZV55C5V6	♦MULB	173 - 10
♦PHIN	♦RTCF	
	♦VALG	
BZV55C6V2	♦MULB	175 - 75
♦PHIN	♦RTCF	
	♦VALG	
BZV55C6V8	♦MULB	178 - 44
♦PHIN	♦RTCF	
	♦VALG	
BZV55C7V5	♦MULB	180 - 42
♦PHIN	♦RTCF	
	♦VALG	
BZV55C8V2	♦MULB	182 - 21
♦PHIN	♦RTCF	
	♦VALG	
BZV55C9V1	♦MULB	185 - 56
♦PHIN	♦RTCF	
	♦VALG	
BZV55C10	♦MULB	187 -103
♦PHIN	♦RTCF	
	♦VALG	
BZV55C11	♦MULB	189 - 42
♦PHIN	♦RTCF	
	♦VALG	
BZV55C12	♦MULB	190 -212
♦PHIN	♦RTCF	
	♦VALG	
BZV55C13	♦MULB	192 -154
♦PHIN	♦RTCF	
	♦VALG	
BZV55C15	♦MULB	194 -200
♦PHIN	♦RTCF	
	♦VALG	
BZV55C16	♦MULB	196 - 82
♦PHIN	♦RTCF	
	♦VALG	
BZV55C18	♦MULB	198 -114
♦PHIN	♦RTCF	
	♦VALG	
BZV55C20	♦MULB	200 -112
♦PHIN	♦RTCF	
	♦VALG	
BZV55C22	♦MULB	202 - 5
♦PHIN	♦RTCF	
	♦VALG	
BZV55C24	♦MULB	203 -112
♦PHIN	♦RTCF	
	♦VALG	
BZV55C27	♦MULB	205 - 45
♦PHIN	♦RTCF	
	♦VALG	
BZV55C30	♦MULB	206 -181
♦PHIN	♦RTCF	
	♦VALG	
BZV55C33	♦MULB	208 - 69
♦PHIN	♦RTCF	
	♦VALG	
BZV55C36	♦MULB	209 -142
♦PHIN	♦RTCF	
	♦VALG	
BZV55C39	♦MULB	210 -178
♦PHIN	♦RTCF	
	♦VALG	
BZV55C43	♦MULB	211 -196
♦PHIN	♦RTCF	
	♦VALG	
BZV55C47	♦MULB	213 - 5
♦PHIN	♦RTCF	
	♦VALG	
BZV55C51	♦MULB	214 - 11
♦PHIN	♦RTCF	
	♦VALG	
BZV55C56	♦MULB	214 -194
♦PHIN	♦RTCF	
	♦VALG	
BZV55C62	♦MULB	216 - 2
♦PHIN	♦RTCF	
	♦VALG	
BZV55C68	♦MULB	216 -177
♦PHIN	♦RTCF	
	♦VALG	
BZV55C75	♦MULB	217 -165
♦PHIN	♦RTCF	
	♦VALG	
BZV58C3V3	♦THEF	377 - 48
BZV58C3V6	♦THEF	377 - 69

TYPE No.	MFRS	Pg&Line
BZV58C3V9	♦THEF	377 - 70
BZV58C4V3	♦THEF	377 -133
BZV58C4V7	♦THEF	378 - 12
BZV58C5V1	♦THEF	378 - 59
BZV58C5V6	♦THEF	378 - 99
BZV58C6V2	♦THEF	378 -154
BZV58C6V8	♦THEF	379 - 14
BZV58C7V5	♦THEF	379 -126
BZV58C8V2	♦THEF	380 - 47
BZV58C9V1	♦THEF	380 -175
BZV58C10	♦THEF	381 - 74
BZV58C11	♦THEF	381 -187
BZV58C12	♦THEF	382 - 82
BZV58C13	♦THEF	382 -198
BZV58C15	♦THEF	383 -162
BZV58C16	♦THEF	384 - 76
BZV58C18	♦THEF	385 - 28
BZV58C20	♦THEF	385 -182
BZV58C22	♦THEF	386 - 87
BZV58C24	♦THEF	387 - 3
BZV58C27	♦THEF	387 -141
BZV58C30	♦THEF	388 - 61
BZV58C33	♦THEF	388 -166
BZV58C36	♦THEF	389 - 80
BZV58C39	♦THEF	389 -184
BZV58C43	♦THEF	390 - 95
BZV58C47	♦THEF	391 - 27
BZV58C51	♦THEF	391 -165
BZV58C56	♦THEF	392 - 73
BZV58C62	♦THEF	392 -200
BZV58C68	♦THEF	393 - 89
BZV58C75	♦THEF	394 - 2
BZV58C82	♦THEF	394 -117
BZV58C91	♦THEF	395 - 28
BZV58C100	♦THEF	395 -118
BZV58C110	♦THEF	396 - 54
BZV58C120	♦THEF	396 -140
BZV58C130	♦THEF	397 - 29
BZV58C150	♦THEF	397 -166
BZV58C160	♦THEF	398 - 56
BZV58C180	♦THEF	398 -169
BZV58C200	♦THEF	399 - 78
BZV60C2V4	♦MULB	164 - 58
♦PHIN	♦RTCF	
	♦VALG	
BZV60C2V7	♦MULB	164 -178
♦PHIN	♦RTCF	
	♦VALG	
BZV60C3V0	♦MULB	165 -117
♦PHIN	♦RTCF	
	♦VALG	
BZV60C3V3	♦MULB	166 - 50
♦PHIN	♦RTCF	
	♦VALG	
BZV60C3V6	♦MULB	167 - 14
♦PHIN	♦RTCF	
	♦VALG	
BZV60C3V9	♦MULB	167 -191
♦PHIN	♦RTCF	
	♦VALG	
BZV60C4V3	♦MULB	169 - 6
♦PHIN	♦RTCF	
	♦VALG	
BZV60C4V7	♦MULB	170 - 51
♦PHIN	♦RTCF	
	♦VALG	
BZV60C5V1	♦MULB	171 -133
♦PHIN	♦RTCF	
	♦VALG	
BZV60C5V6	♦MULB	173 - 11
♦PHIN	♦RTCF	
	♦VALG	
BZV60C6V2	♦MULB	175 - 76
♦PHIN	♦RTCF	
	♦VALG	
BZV60C6V8	♦MULB	178 - 45
♦PHIN	♦RTCF	
	♦VALG	
BZV60C7V5	♦MULB	180 - 43
♦PHIN	♦RTCF	
	♦VALG	
BZV60C8V2	♦MULB	182 - 22
♦PHIN	♦RTCF	
	♦VALG	
BZV60C9V1	♦MULB	185 - 57
♦PHIN	♦RTCF	
	♦VALG	
BZV60C10	♦MULB	187 -104
♦PHIN	♦RTCF	
	♦VALG	
BZV60C11	♦MULB	189 - 43
♦PHIN	♦RTCF	
	♦VALG	
BZV60C12	♦MULB	190 -213
♦PHIN	♦RTCF	
	♦VALG	
BZV60C13	♦MULB	192 -155
♦PHIN	♦RTCF	
	♦VALG	
BZV60C15	♦MULB	195 - 1
♦PHIN	♦RTCF	
	♦VALG	
BZV60C16	♦MULB	196 - 83
♦PHIN	♦RTCF	
	♦VALG	
BZV60C18	♦MULB	198 -115
♦PHIN	♦RTCF	
	♦VALG	
BZV60C20	♦MULB	200 -113
♦PHIN	♦RTCF	
	♦VALG	
BZV60C22	♦MULB	202 - 6
♦PHIN	♦RTCF	
	♦VALG	

TYPE No.	MFRS	Pg&Line
BZV60C24	♦MULB	203 -113
♦PHIN	♦RTCF	
	♦VALG	
BZV60C27	♦MULB	205 - 46
♦PHIN	♦RTCF	
	♦VALG	
BZV60C30	♦MULB	206 -182
♦PHIN	♦RTCF	
	♦VALG	
BZV60C33	♦MULB	208 - 70
♦PHIN	♦RTCF	
	♦VALG	
BZV60C36	♦MULB	209 -143
♦PHIN	♦RTCF	
	♦VALG	
BZV60C39	♦MULB	210 -179
♦PHIN	♦RTCF	
	♦VALG	
BZV60C43	♦MULB	211 -197
♦PHIN	♦RTCF	
	♦VALG	
BZV60C47	♦MULB	213 - 6
♦PHIN	♦RTCF	
	♦VALG	
BZV60C51	♦MULB	214 - 12
♦PHIN	♦RTCF	
	♦VALG	
BZV60C56	♦MULB	214 -195
♦PHIN	♦RTCF	
	♦VALG	
BZV60C62	♦MULB	216 - 3
♦PHIN	♦RTCF	
	♦VALG	
BZV60C68	♦MULB	216 -178
♦PHIN	♦RTCF	
	♦VALG	
BZV60C75	♦MULB	217 -166
♦PHIN	♦RTCF	
	♦VALG	
BZV85C3V6	♦APX	167 - 39
MULB	PHIN	
RTCF	VALG	
BZV85C3V9	♦APX	168 - 19
MULB	PHIN	
RTCF	VALG	
BZV85C4V3	♦APX	169 - 41
MULB	PHIN	
RTCF	VALG	
BZV85C4V7	♦APX	170 - 94
MULB	PHIN	
RTCF	VALG	
BZV85C5V1	♦APX	171 -175
♦MULB	♦PHIN	
RTCF	♦VALG	
BZV85C5V6	♦APX	173 - 60
♦MULB	♦PHIN	
RTCF	♦VALG	
BZV85C6V2	♦APX	175 -122
♦MULB	♦PHIN	
RTCF	♦VALG	
BZV85C6V8	♦APX	178 -104
♦MULB	♦PHIN	
RTCF	♦VALG	
BZV85C7V5	♦APX	180 - 98
♦MULB	♦PHIN	
RTCF	♦VALG	
BZV85C8V2	♦APX	182 - 82
♦MULB	♦PHIN	
RTCF	♦VALG	
BZV85C9V1	♦APX	185 -113
♦MULB	♦PHIN	
RTCF	♦VALG	
BZV85C10	♦APX	187 -172
♦MULB	♦PHIN	
RTCF	♦VALG	
BZV85C11	♦APX	189 - 86
♦MULB	♦PHIN	
RTCF	♦VALG	
BZV85C12	♦APX	191 - 54
♦MULB	♦PHIN	
RTCF	♦VALG	
BZV85C13	♦APX	193 - 5
♦MULB	♦PHIN	
RTCF	VALG	
BZV85C15	♦APX	195 - 54
♦MULB	♦PHIN	
RTCF	♦VALG	
BZV85C16	♦APX	196 -147
♦MULB	♦PHIN	
RTCF	♦VALG	
BZV85C18	♦APX	198 -163
♦MULB	♦PHIN	
RTCF	♦VALG	
BZV85C20	♦APX	200 -143
♦MULB	♦PHIN	
RTCF	♦VALG	
BZV85C22	♦APX	202 - 55
♦MULB	♦PHIN	
RTCF	♦VALG	
BZV85C24	♦APX	203 -153
♦MULB	♦PHIN	
RTCF	♦VALG	
BZV85C27	♦APX	205 - 91
♦MULB	♦PHIN	
RTCF	♦VALG	
BZV85C30	♦APX	207 - 17
♦MULB	♦PHIN	
RTCF	♦VALG	
BZV85C33	♦APX	208 -110
♦MULB	♦PHIN	
RTCF	♦VALG	
BZV85C36	♦APX	209 -175
♦MULB	♦PHIN	
RTCF	♦VALG	

TYPE No.	MFRS	Pg&Line
BZV85C39	♦APX	211 - 12
♦MULB	♦PHIN	
RTCF	♦VALG	
BZV85C43	♦APX	212 - 22
♦MULB	♦PHIN	
RTCF	♦VALG	
BZV85C47	♦APX	213 - 39
♦MULB	♦PHIN	
RTCF	♦VALG	
BZV85C51	♦APX	214 - 36
♦MULB	♦PHIN	
RTCF	♦VALG	
BZV85C56	♦APX	215 - 22
♦MULB	♦PHIN	
RTCF	♦VALG	
BZV85C62	♦APX	216 - 28
♦MULB	♦PHIN	
RTCF	♦VALG	
BZV85C68	♦APX	217 - 9
♦MULB	♦PHIN	
RTCF	♦VALG	
BZV85C75	♦APX	217 -191
♦MULB	♦PHIN	
RTCF	♦VALG	
BZW03/D7V5	♦ALGG	379 -152
BZW03/D8V2	♦ALGG	379 -153
BZW03/D9V1	♦ALGG	379 -154
BZW03/D10	♦ALGG	379 -155
BZW03/D11	♦ALGG	379 -156
BZW03/D12	♦ALGG	379 -157
BZW03/D13	♦ALGG	379 -158
BZW03/D15	♦ALGG	379 -159
BZW03/D16	♦ALGG	379 -160
BZW03/D18	♦ALGG	379 -161
BZW03/D20	♦ALGG	379 -162
BZW03/D22	♦ALGG	379 -163
BZW03/D24	♦ALGG	379 -164
BZW03/D27	♦ALGG	379 -165
BZW03/D30	♦ALGG	379 -166
BZW03/D33	♦ALGG	379 -167
BZW03/D36	♦ALGG	379 -168
BZW03/D39	♦ALGG	379 -169
BZW03/D43	♦ALGG	379 -170
BZW03/D47	♦ALGG	379 -171
BZW03/D51	♦ALGG	379 -172
BZW03/D56	♦ALGG	379 -173
BZW03/D62	♦ALGG	393 - 16
BZW03/D68	♦ALGG	393 -107
BZW03/D75	♦ALGG	394 - 29
BZW03/D82	♦ALGG	394 -135
BZW03/D91	♦ALGG	395 - 45
BZW03/D100	♦ALGG	395 -149
BZW03/D110	♦ALGG	396 - 72
BZW03/D120	♦ALGG	396 -159
BZW03/D130	♦ALGG	397 - 48
BZW03/D150	♦ALGG	397 -185
BZW03/D160	♦ALGG	398 - 74
BZW03/D180	♦ALGG	398 -188
BZW03/D200	♦ALGG	399 - 96
BZW03/D220	♦ALGG	399 -154
BZW03/D240	♦ALGG	399 -163
BZW03/D270	♦ALGG	399 -174
BZW03C6V8	♦MULB	177 -130
♦PHIN	♦RTCF	
	♦VALG	
BZW03C8V2	♦ALGG	340 - 21
♦MULB	♦PHIN	
♦RTCF	♦VALG	
BZW03C9V1	♦ALGG	340 - 22
♦MULB	♦PHIN	
♦RTCF	♦VALG	
BZW03C10	♦ALGG	340 - 23
♦MULB	♦PHIN	
♦RTCF	♦VALG	
BZW03C11	♦ALGG	340 - 24
♦MULB	♦PHIN	
♦RTCF	♦VALG	
BZW03C12	♦ALGG	340 - 25
♦MULB	♦PHIN	
♦RTCF	♦VALG	
BZW03C13	♦ALGG	340 - 26
♦MULB	♦PHIN	
♦RTCF	♦VALG	
BZW03C15	♦ALGG	340 - 27
♦MULB	♦PHIN	
♦RTCF	♦VALG	
BZW03C16	♦ALGG	340 - 28
♦MULB	♦PHIN	
♦RTCF	♦VALG	
BZW03C18	♦ALGG	340 - 29
♦MULB	♦PHIN	
♦RTCF	♦VALG	
BZW03C20	♦ALGG	340 - 30
♦MULB	♦PHIN	
♦RTCF	♦VALG	
BZW03C22	♦ALGG	340 - 31
♦MULB	♦PHIN	
♦RTCF	♦VALG	
BZW03C24	♦ALGG	340 - 32
♦MULB	♦PHIN	
♦RTCF	♦VALG	
BZW03C27	♦ALGG	340 - 33
♦MULB	♦PHIN	
♦RTCF	♦VALG	
BZW03C30	♦ALGG	340 - 34
♦MULB	♦PHIN	
♦RTCF	♦VALG	
BZW03C33	♦ALGG	340 - 35
♦MULB	♦PHIN	
♦RTCF	♦VALG	
BZW03C36	♦ALGG	340 - 36
♦MULB	♦PHIN	
♦RTCF	♦VALG	

TYPE No.	MFRS	Pg&Line
BZW03C39	♦ALGG	340 - 37
♦MULB	♦PHIN	
♦RTCF	♦VALG	
BZW03C43	♦ALGG	340 - 38
♦MULB	♦PHIN	
♦RTCF	♦VALG	
BZW03C47	♦ALGG	340 - 39
♦MULB	♦PHIN	
♦RTCF	♦VALG	
BZW03C51	♦ALGG	340 - 40
♦MULB	♦PHIN	
♦RTCF	♦VALG	
BZW03C56	♦ALGG	340 - 41
♦MULB	♦PHIN	
♦RTCF	♦VALG	
BZW03C62	♦ALGG	340 - 42
♦MULB	♦PHIN	
♦RTCF	♦VALG	
BZW03C68	♦ALGG	340 - 43
♦MULB	♦PHIN	
♦RTCF	♦VALG	
BZW03C75	♦ALGG	340 - 44
♦MULB	♦PHIN	
♦RTCF	♦VALG	
BZW03C82	♦ALGG	340 - 45
♦MULB	♦PHIN	
♦RTCF	♦VALG	
BZW03C91	♦ALGG	340 - 46
♦MULB	♦PHIN	
♦RTCF	♦VALG	
BZW03C100	♦ALGG	340 - 47
♦MULB	♦PHIN	
♦RTCF	♦VALG	
BZW03C110	♦ALGG	340 - 48
♦MULB	♦PHIN	
♦RTCF	♦VALG	
BZW03C120	♦ALGG	340 - 49
♦MULB	♦PHIN	
♦RTCF	♦VALG	
BZW03C130	♦ALGG	340 - 50
♦MULB	♦PHIN	
♦RTCF	♦VALG	
BZW03C150	♦ALGG	340 - 51
♦MULB	♦PHIN	
♦RTCF	♦VALG	
BZW03C160	♦ALGG	340 - 52
♦MULB	♦PHIN	
♦RTCF	♦VALG	
BZW03C180	♦ALGG	340 - 53
♦MULB	♦PHIN	
♦RTCF	♦VALG	
BZW03C200	♦ALGG	340 - 54
♦MULB	♦PHIN	
♦RTCF	♦VALG	
BZW03C220	♦ALGG	340 - 55
♦MULB	♦PHIN	
♦RTCF	♦VALG	
BZW03C240	♦ALGG	340 - 56
♦MULB	♦PHIN	
♦RTCF	♦VALG	
BZW03C270	♦ALGG	340 - 57
♦MULB	♦PHIN	
♦RTCF	♦VALG	
BZW04-5V8	♦THEF	319 - 7
BZW04-5V8B	♦THEF	319 - 8
BZW04-6V0	♦FGRS	319 - 9
BZW04-6V4	♦FGRS	319 - 10
	♦THEF	
BZW04-6V4B	♦THEF	319 - 11
BZW04-6V6	♦FGRS	319 - 12
BZW04-7V0	♦FGRS	319 - 13
	♦THEF	
BZW04-7V0B	♦THEF	319 - 14
BZW04-7V4	♦FGRS	319 - 15
BZW04-7V8	♦FGRS	319 - 16
	♦THEF	
BZW04-7V8B	♦THEF	319 - 17
BZW04-8V1	♦FGRS	319 - 18
BZW04-8V5	♦FGRS	340 - 58
BZW04-8V6	♦THEF	319 - 19
BZW04-8V6B	♦THEF	319 - 20
BZW04-8V9	♦FGRS	319 - 21
BZW04-9V4	♦FGRS	319 - 22
	♦THEF	
BZW04-9V4B	♦THEF	319 - 23
BZW04-9V7	♦FGRS	319 - 24
BZW04-9V9	♦THEF	319 - 25
BZW04-9V9B	♦THEF	319 - 26
BZW04-10	♦FGRS	319 - 27
BZW04-11	♦FGRS	319 - 28
	♦THEF	
BZW04-11B	♦THEF	319 - 29
BZW04-12	♦FGRS	319 - 30
BZW04-12V5	♦THEF	319 - 31
BZW04-12V5B	♦THEF	319 - 32
BZW04-13	♦FGRS	319 - 33
BZW04-13V5	♦THEF	319 - 34
BZW04-13V5B	♦THEF	319 - 35
BZW04-14	♦FGRS	319 - 36
BZW04-15	♦FGRS	319 - 37
	♦THEF	
BZW04-15B	♦THEF	319 - 38
BZW04-16	♦FGRS	319 - 39
BZW04-17	♦FGRS	319 - 40
	♦THEF	
BZW04-17B	♦THEF	319 - 41
BZW04-18	♦FGRS	319 - 42
BZW04-18V15	♦THEF	319 - 43
BZW04-18V5B	♦THEF	319 - 44
BZW04-19	♦FGRS	319 - 45
BZW04-20	♦FGRS	319 - 46
	♦THEF	
BZW04-20B	♦THEF	319 - 47
BZW04-22	♦FGRS	319 - 48

Δ-Registered with JEDEC by this manufacturer

♦-Mfr's data sheet available in microfilm service

1. TYPE No. CROSS INDEX

IN TYPE NUMBER SEQUENCE

TYPE No.	MFRS	Pg&Line
BZW04-23	♦FGRS	319 - 49
	♦THEF	
BZW04-23B	♦THEF	319 - 50
BZW04-24	♦FGRS	340 - 59
BZW04-26	♦FGRS	319 - 51
	♦THEF	
BZW04-26B	♦THEF	319 - 52
BZW04-27	♦FGRS	319 - 53
BZW04-28	♦FGRS	319 - 54
	♦THEF	
BZW04-28B	♦THEF	319 - 55
BZW04-29	♦FGRS	319 - 56
BZW04-31	♦FGRS	319 - 57
	♦THEF	
BZW04-31B	♦THEF	319 - 58
BZW04-32	♦FGRS	319 - 59
BZW04-33	♦FGRS	319 - 60
	♦THEF	
BZW04-33B	♦THEF	319 - 61
BZW04-35	♦FGRS	319 - 62
BZW04-37	♦FGRS	319 - 63
	♦THEF	
BZW04-37B	♦THEF	319 - 64
BZW04-38	♦FGRS	319 - 65
BZW04-40	♦FGRS	319 - 66
	♦THEF	
BZW04-40B	♦THEF	319 - 67
BZW04-41	♦FGRS	319 - 68
BZW04-44	♦FGRS	319 - 69
	♦THEF	
BZW04-44B	♦THEF	319 - 70
BZW04-45	♦FGRS	319 - 71
BZW04-48	♦FGRS	319 - 72
	♦THEF	
BZW04-48B	♦THEF	319 - 73
BZW04-50	♦FGRS	319 - 74
BZW04-53	♦FGRS	319 - 75
	♦THEF	
BZW04-53B	♦THEF	319 - 76
BZW04-55	♦FGRS	319 - 77
BZW04-58	♦FGRS	319 - 78
	♦THEF	
BZW04-58B	♦THEF	319 - 79
BZW04-61	♦FGRS	319 - 80
BZW04-64	♦FGRS	319 - 81
	♦THEF	
BZW04-64B	♦THEF	319 - 82
BZW04-66	♦FGRS	319 - 83
BZW04-70	♦FGRS	319 - 84
	♦THEF	
BZW04-70B	♦THEF	319 - 85
BZW04-74	♦FGRS	319 - 86
BZW04-78	♦FGRS	319 - 87
	♦THEF	
BZW04-78B	♦THEF	319 - 88
BZW04-81	♦FGRS	319 - 89
BZW04-85	♦FGRS	319 - 90
	♦THEF	
BZW04-85B	♦THEF	319 - 91
BZW04-89	♦FGRS	319 - 92
BZW04-94	♦FGRS	319 - 93
	♦THEF	
BZW04-94B	♦THEF	319 - 94
BZW04-97	♦FGRS	319 - 95
BZW04-102	♦FGRS	319 - 96
	♦THEF	
BZW04-102B	♦THEF	319 - 97
BZW04-105	♦FGRS	319 - 98
BZW04-111	♦FGRS	319 - 99
	♦THEF	
BZW04-111B	♦THEF	319 -100
BZW04-121	♦FGRS	319 -101
BZW04-128	♦FGRS	319 -102
	♦THEF	
BZW04-128B	♦THEF	319 -103
BZW04-130	♦FGRS	319 -104
BZW04-136	♦FGRS	319 -105
	♦THEF	
BZW04-136B	♦THEF	319 -106
BZW04-138	♦FGRS	319 -107
BZW04-144	♦THEF	319 -108
BZW04-145	♦FGRS	340 - 60
BZW04-145B	♦THEF	319 -109
BZW04-146	♦FGRS	319 -110
BZW04-154	♦FGRS	320 - 1
	♦THEF	
BZW04-154B	♦THEF	320 - 2
BZW04-162	♦FGRS	320 - 3
BZW04-171	♦FGRS	320 - 4
	♦THEF	
BZW04-171B	♦THEF	320 - 5
BZW04-188	♦THEF	320 - 6
BZW04-188B	♦THEF	320 - 7
BZW04-213	♦THEF	320 - 8
BZW04-213B	♦THEF	320 - 9
BZW04-239	♦THEF	320 - 10
BZW04-239B	♦THEF	320 - 11
BZW04-256	♦THEF	320 - 12
BZW04-256B	♦THEF	320 - 13
BZW04-273	♦THEF	320 - 14
BZW04-273B	♦THEF	320 - 15
BZW04-299	♦THEF	320 - 16
BZW04-299B	♦THEF	320 - 17
BZW04-342	♦THEF	320 - 18
BZW04-342B	♦THEF	320 - 19
BZW04-376	♦THEF	320 - 20
BZW04-376B	♦THEF	320 - 21
BZW04P5V8	♦THEF	320 - 22
BZW04P5V8B	♦THEF	320 - 23
BZW04P6V4	♦THEF	320 - 24
BZW04P6V4B	♦THEF	320 - 25
BZW04P7V0	♦THEF	320 - 26
BZW04P7V0B	♦THEF	320 - 27
BZW04P7V8	♦THEF	320 - 28

TYPE No.	MFRS	Pg&Line
BZW04P7V8B	♦THEF	320 - 29
BZW04P8V5	♦THEF	320 - 30
BZW04P8V5B	♦THEF	320 - 31
BZW04P9V4	♦THEF	320 - 32
BZW04P9V4B	♦THEF	320 - 33
BZW04P10	♦THEF	320 - 34
BZW04P10B	♦THEF	320 - 35
BZW04P11	♦THEF	320 - 36
BZW04P11B	♦THEF	320 - 37
BZW04P13	♦THEF	320 - 38
BZW04P13B	♦THEF	320 - 39
BZW04P14	♦THEF	320 - 40
BZW04P14B	♦THEF	320 - 41
BZW04P15	♦THEF	320 - 42
BZW04P15B	♦THEF	320 - 43
BZW04P17	♦THEF	320 - 44
BZW04P17B	♦THEF	320 - 45
BZW04P19	♦THEF	320 - 46
BZW04P19B	♦THEF	320 - 47
BZW04P20	♦THEF	320 - 48
BZW04P20B	♦THEF	320 - 49
BZW04P23	♦THEF	320 - 50
BZW04P26	♦THEF	320 - 51
BZW04P26B	♦THEF	320 - 52
BZW04P28	♦THEF	320 - 53
BZW04P28B	♦THEF	320 - 54
BZW04P31	♦THEF	320 - 55
BZW04P31B	♦THEF	320 - 56
BZW04P33	♦THEF	320 - 57
BZW04P37	♦THEF	320 - 58
BZW04P37B	♦THEF	320 - 59
BZW04P40	♦THEF	320 - 60
BZW04P40B	♦THEF	320 - 61
BZW04P44	♦THEF	320 - 62
BZW04P44B	♦THEF	320 - 63
BZW04P48	♦THEF	320 - 64
BZW04P48B	♦THEF	320 - 65
BZW04P53	♦THEF	320 - 66
BZW04P53B	♦THEF	320 - 67
BZW04P58	♦THEF	320 - 68
BZW04P58B	♦THEF	320 - 69
BZW04P64	♦THEF	320 - 70
BZW04P64B	♦THEF	320 - 71
BZW04P70	♦THEF	320 - 72
BZW04P70B	♦THEF	320 - 73
BZW04P78	♦THEF	320 - 74
BZW04P78B	♦THEF	320 - 75
BZW04P85	♦THEF	320 - 76
BZW04P85B	♦THEF	320 - 77
BZW04P94	♦THEF	320 - 78
BZW04P94B	♦THEF	320 - 79
BZW04P102	♦THEF	320 - 80
BZW04P102B	♦THEF	320 - 81
BZW04P111	♦THEF	320 - 82
BZW04P111B	♦THEF	320 - 83
BZW04P128	♦THEF	320 - 84
BZW04P128B	♦THEF	320 - 85
BZW04P136	♦THEF	320 - 86
BZW04P136B	♦THEF	320 - 87
BZW04P145	♦THEF	320 - 88
BZW04P145B	♦THEF	320 - 89
BZW04P154	♦THEF	320 - 90
BZW04P154B	♦THEF	320 - 91
BZW04P171	♦THEF	320 - 92
BZW04P171B	♦THEF	320 - 93
BZW04P188	♦THEF	320 - 94
BZW04P188B	♦THEF	320 - 95
BZW04P213	♦THEF	320 - 96
BZW04P213B	♦THEF	320 - 97
BZW04P239	♦THEF	320 - 98
BZW04P239B	♦THEF	320 - 99
BZW04P256	♦THEF	320 -100
BZW04P256B	♦THEF	320 -101
BZW04P273	♦THEF	320 -102
BZW04P273B	♦THEF	320 -103
BZW04P299	♦THEF	320 -104
BZW04P299B	♦THEF	320 -105
BZW04P342	♦THEF	320 -106
BZW04P342B	♦THEF	320 -107
BZW04P376	♦THEF	320 -108
BZW04P376B	♦THEF	320 -109
BZW06-5V8	♦THEF	320 -110
BZW06-5V8B	♦THEF	321 - 1
BZW06-6V4	♦FGRS	321 - 2
	♦THEF	
BZW06-6V4B	♦THEF	321 - 3
BZW06-7V0	♦FGRS	321 - 4
	♦THEF	
BZW06-7V0B	♦THEF	321 - 5
BZW06-7V8	♦FGRS	321 - 6
	♦THEF	
BZW06-7V8B	♦THEF	321 - 7
BZW06-8V5	♦FGRS	321 - 8
	♦THEF	
BZW06-8V5B	♦THEF	321 - 9
BZW06-9V4	♦FGRS	321 - 10
	♦THEF	
BZW06-9V4B	♦THEF	321 - 11
BZW06-10	♦FGRS	321 - 12
	♦THEF	
BZW06-10B	♦THEF	321 - 13
BZW06-11	♦FGRS	321 - 14
	♦THEF	
BZW06-11B	♦THEF	321 - 15
BZW06-13	♦FGRS	321 - 16
	♦THEF	
BZW06-13B	♦THEF	321 - 17
BZW06-14	♦FGRS	321 - 18
	♦THEF	
BZW06-14B	♦THEF	321 - 19
BZW06-15	♦FGRS	321 - 20
	♦THEF	
BZW06-15B	♦THEF	321 - 21

TYPE No.	MFRS	Pg&Line
BZW06-17	♦FGRS	321 - 22
	♦THEF	
BZW06-17B	♦THEF	321 - 23
BZW06-19	♦FGRS	321 - 24
	♦THEF	
BZW06-19B	♦THEF	321 - 25
BZW06-20	♦FGRS	321 - 26
	♦THEF	
BZW06-20B	♦THEF	321 - 27
BZW06-23	♦FGRS	321 - 28
	♦THEF	
BZW06-23B	♦THEF	321 - 29
BZW06-26	♦FGRS	321 - 30
	♦THEF	
BZW06-26B	♦THEF	321 - 31
BZW06-28	♦FGRS	321 - 32
	♦THEF	
BZW06-28B	♦THEF	321 - 33
BZW06-31	♦FGRS	321 - 34
	♦THEF	
BZW06-31B	♦THEF	321 - 35
BZW06-33	♦FGRS	321 - 36
	♦THEF	
BZW06-33B	♦THEF	321 - 37
BZW06-37	♦FGRS	321 - 38
	♦THEF	
BZW06-37B	♦THEF	321 - 39
BZW06-40	♦FGRS	321 - 40
	♦THEF	
BZW06-40B	♦THEF	321 - 41
BZW06-44	♦FGRS	321 - 42
	♦THEF	
BZW06-44B	♦THEF	321 - 43
BZW06-48	♦FGRS	321 - 44
	♦THEF	
BZW06-48B	♦THEF	321 - 45
BZW06-53	♦FGRS	321 - 46
	♦THEF	
BZW06-53B	♦THEF	321 - 47
BZW06-58	♦FGRS	321 - 48
	♦THEF	
BZW06-58B	♦THEF	321 - 49
BZW06-64	♦FGRS	321 - 50
	♦THEF	
BZW06-64B	♦THEF	321 - 51
BZW06-70	♦FGRS	321 - 52
	♦THEF	
BZW06-70B	♦THEF	321 - 53
BZW06-78	♦FGRS	321 - 54
	♦THEF	
BZW06-78B	♦THEF	321 - 55
BZW06-85	♦FGRS	321 - 56
	♦THEF	
BZW06-85B	♦THEF	321 - 57
BZW06-94	♦FGRS	321 - 58
	♦THEF	
BZW06-94B	♦THEF	321 - 59
BZW06-102	♦FGRS	321 - 60
	♦THEF	
BZW06-102B	♦THEF	321 - 61
BZW06-111	♦FGRS	321 - 62
	♦THEF	
BZW06-111B	♦THEF	321 - 63
BZW06-128	♦FGRS	321 - 64
	♦THEF	
BZW06-128B	♦THEF	321 - 65
BZW06-136	♦FGRS	321 - 66
	♦THEF	
BZW06-136B	♦THEF	321 - 67
BZW06-138	THEF	340 - 61
BZW06-145	♦FGRS	321 - 68
	♦THEF	
BZW06-145B	♦THEF	321 - 69
BZW06-154	♦FGRS	321 - 70
	♦THEF	
BZW06-154B	♦THEF	321 - 71
BZW06-171	♦FGRS	321 - 72
	♦THEF	
BZW06-171B	♦THEF	321 - 73
BZW06-188	♦THEF	321 - 74
BZW06-188B	♦THEF	321 - 75
BZW06-213	♦THEF	321 - 76
BZW06-213B	♦THEF	321 - 77
BZW06-239	♦THEF	321 - 78
BZW06-239B	♦THEF	321 - 79
BZW06-256	♦THEF	321 - 80
BZW06-256B	♦THEF	321 - 81
BZW06-273	♦THEF	321 - 82
BZW06-273B	♦THEF	321 - 83
BZW06-299	♦THEF	321 - 84
BZW06-299B	♦THEF	321 - 85
BZW06-342	♦THEF	321 - 86
BZW06-342B	♦THEF	321 - 87
BZW06-376	♦THEF	321 - 88
BZW06-376B	♦THEF	321 - 89
BZW06P5V8	♦THEF	321 - 90
BZW06P5V8B	♦THEF	321 - 91
BZW06P6V4	♦THEF	321 - 92
BZW06P6V4B	♦THEF	321 - 93
BZW06P7V0	♦THEF	321 - 94
BZW06P7V0B	♦THEF	321 - 95
BZW06P7V8	♦THEF	321 - 96
BZW06P7V8B	♦THEF	321 - 97
BZW06P8V5	♦THEF	321 - 98
BZW06P8V5B	♦THEF	321 - 99
BZW06P9V4	♦THEF	321 -100
BZW06P9V4B	♦THEF	321 -101
BZW06P10	♦THEF	321 -102
BZW06P10B	♦THEF	321 -103
BZW06P11	♦THEF	321 -104
BZW06P11B	♦THEF	321 -105
BZW06P13	♦THEF	321 -106
BZW06P13B	♦THEF	321 -107
BZW06P14	♦THEF	321 -108

TYPE No.	MFRS	Pg&Line
BZW06P14B	♦THEF	321 -109
BZW06P15	♦THEF	321 -110
BZW06P15B	♦THEF	322 - 1
BZW06P17	♦THEF	322 - 2
BZW06P17B	♦THEF	322 - 3
BZW06P19	♦THEF	322 - 4
BZW06P19B	♦THEF	322 - 5
BZW06P20	♦THEF	322 - 6
BZW06P20B	♦THEF	322 - 7
BZW06P23	♦THEF	322 - 8
BZW06P23B	♦THEF	322 - 9
BZW06P26	♦THEF	322 - 10
BZW06P26B	♦THEF	322 - 11
BZW06P28	♦THEF	322 - 12
BZW06P28B	♦THEF	322 - 13
BZW06P31	♦THEF	322 - 14
BZW06P31B	♦THEF	322 - 15
BZW06P33	♦THEF	322 - 16
BZW06P33B	♦THEF	322 - 17
BZW06P37	♦THEF	322 - 18
BZW06P37B	♦THEF	322 - 19
BZW06P40	♦THEF	322 - 20
BZW06P40B	♦THEF	322 - 21
BZW06P44	♦THEF	322 - 22
BZW06P44B	♦THEF	322 - 23
BZW06P48	♦THEF	322 - 24
BZW06P48B	♦THEF	322 - 25
BZW06P53	♦THEF	322 - 26
BZW06P53B	♦THEF	322 - 27
BZW06P58	♦THEF	322 - 28
BZW06P58B	♦THEF	322 - 29
BZW06P64	♦THEF	322 - 30
BZW06P64B	♦THEF	322 - 31
BZW06P70	♦THEF	322 - 32
BZW06P70B	♦THEF	322 - 33
BZW06P78	♦THEF	322 - 34
BZW06P78B	♦THEF	322 - 35
BZW06P85	♦THEF	322 - 36
BZW06P85B	♦THEF	322 - 37
BZW06P94	♦THEF	322 - 38
BZW06P94B	♦THEF	322 - 39
BZW06P102	♦THEF	322 - 40
BZW06P102B	♦THEF	322 - 41
BZW06P111	♦THEF	322 - 42
BZW06P111B	♦THEF	322 - 43
BZW06P128	♦THEF	322 - 44
BZW06P128B	♦THEF	322 - 45
BZW06P136	♦THEF	322 - 46
BZW06P136B	♦THEF	322 - 47
BZW06P145	♦THEF	322 - 48
BZW06P145B	♦THEF	322 - 49
BZW06P154	♦THEF	322 - 50
BZW06P154B	♦THEF	322 - 51
BZW06P171	♦THEF	322 - 52
BZW06P171B	♦THEF	322 - 53
BZW06P188	♦THEF	322 - 54
BZW06P188B	♦THEF	322 - 55
BZW06P213	♦THEF	322 - 56
BZW06P213B	♦THEF	322 - 57
BZW06P239	♦THEF	322 - 58
BZW06P239B	♦THEF	322 - 59
BZW06P256	♦THEF	322 - 60
BZW06P256B	♦THEF	322 - 61
BZW06P273	♦THEF	322 - 62
BZW06P273B	♦THEF	322 - 63
BZW06P299	♦THEF	322 - 64
BZW06P299B	♦THEF	322 - 65
BZW06P342	♦THEF	322 - 66
BZW06P342B	♦THEF	322 - 67
BZW06P376	♦THEF	322 - 68
BZW06P376B	♦THEF	322 - 69
BZW07-10	THEF	340 - 62
BZW07-10B	THEF	340 - 63
BZW07-27	THEF	340 - 64
BZW07-27B	THEF	340 - 65
BZW07-43	THEF	340 - 66
BZW07-43B	THEF	340 - 67
BZW07-110	THEF	340 - 68
BZW07-110B	THEF	340 - 69
BZW10-12	♦MULB	340 - 70
♦PHIN	♦RTCF	
	♦VALG	
BZW10-15	♦MULB	340 - 71
♦PHIN	♦RTCF	
	♦VALG	
BZW11-7V0	♦FGRS	340 - 72
BZW11-7V8	♦FGRS	340 - 73
BZW11-8V5	♦FGRS	340 - 74
BZW11-9V4	♦FGRS	340 - 75
BZW11-10	♦FGRS	340 - 76
	THEF	
BZW11-10B	THEF	340 - 77
BZW11-11	♦FGRS	340 - 78
BZW11-13	♦FGRS	340 - 79
BZW11-14	♦FGRS	340 - 80
BZW11-15	♦FGRS	340 - 81
BZW11-17	♦FGRS	340 - 82
BZW11-19	♦FGRS	340 - 83
BZW11-20	♦FGRS	340 - 84
BZW11-23	♦FGRS	340 - 85
BZW11-26	♦FGRS	340 - 86
BZW11-27	THEF	340 - 87
BZW11-27B	THEF	340 - 88
BZW11-28	♦FGRS	340 - 89
BZW11-31	♦FGRS	340 - 90
BZW11-33	♦FGRS	340 - 91
BZW11-37	♦FGRS	340 - 92
BZW11-40	♦FGRS	340 - 93
BZW11-43	THEF	340 - 94
BZW11-43B	THEF	340 - 95
BZW11-44	♦FGRS	340 - 96
BZW11-48	♦FGRS	340 - 97
BZW11-53	♦FGRS	340 - 98
BZW11-58	♦FGRS	340 - 99

TYPE No.	MFRS	Pg&Line
BZW11-64	♦FGRS	340 -100
BZW11-70	♦FGRS	340 -101
BZW11-78	♦FGRS	340 -102
BZW11-85	♦FGRS	340 -103
BZW11-94	♦FGRS	340 -104
BZW11-102	♦FGRS	340 -105
BZW11-110	THEF	340 -106
BZW11-110B	THEF	340 -107
BZW11-128	♦FGRS	340 -108
BZW11-136	♦FGRS	340 -109
BZW11-145	♦FGRS	340 -110
BZW11-154	♦FGRS	341 - 1
BZW11-171	♦FGRS	341 - 2
BZW14	♦MULB	341 - 3
♦PHIN	♦RTCF	
	♦VALG	
BZW22C1	MSC	163 - 34
	♦SIEG	
BZW22C2V7	♦ALGG	164 -199
BZW22C3V0	♦ALGG	165 -141
BZW22C3V3	♦ALGG	166 - 92
MSC	♦SIEG	
BZW22C3V6	♦ALGG	167 - 60
MSC	♦SIEG	
BZW22C3V9	♦ALGG	168 - 40
MSC	♦SIEG	
BZW22C4V3	♦ALGG	169 - 63
MSC	♦SIEG	
BZW22C4V7	♦ALGG	170 -119
MSC	♦SIEG	
BZW22C5V1	♦ALGG	171 -201
MSC	♦SIEG	
BZW22C5V6	♦ALGG	173 - 89
MSC	♦SIEG	
BZW22C6V2	♦ALGG	175 -152
MSC	♦SIEG	
BZW22C6V8	♦ALGG	178 -153
MSC	♦SIEG	
BZW22C7V5	♦ALGG	180 -146
MSC	♦SIEG	
BZW22C8V2	♦ALGG	182 -134
MSC	♦SIEG	
BZW22C9V1	♦ALGG	185 -167
MSC	♦SIEG	
BZW22C10	♦ALGG	188 - 26
MSC	♦SIEG	
BZW22C11	♦ALGG	189 -134
MSC	♦SIEG	
BZW22C12	♦ALGG	191 -109
MSC	♦SIEG	
BZW22C13	♦ALGG	193 - 53
MSC	♦SIEG	
BZW22C15	♦ALGG	195 -114
MSC	♦SIEG	
BZW22C16	♦ALGG	196 -197
MSC	♦SIEG	
BZW22C18	♦ALGG	199 - 13
MSC	♦SIEG	
BZW22C20	♦ALGG	201 - 4
MSC	♦SIEG	
BZW22C22	♦ALGG	202 -106
MSC	♦SIEG	
BZW22C24	♦ALGG	203 -201
MSC	♦SIEG	
BZW22C27	♦ALGG	205 -150
MSC	♦SIEG	
BZW22C30	♦ALGG	207 - 75
MSC	♦SIEG	
BZW22C33	♦ALGG	208 -167
MSC	♦SIEG	
BZW22C36	♦ALGG	210 - 18
MSC	♦SIEG	
BZW22C39	♦ALGG	211 - 50
MSC	♦SIEG	
BZW22C43	♦ALGG	212 - 64
MSC	♦SIEG	
BZW22C47	♦ALGG	213 - 81
MSC	♦SIEG	
BZW22C51	♦ALGG	214 - 77
MSC	♦SIEG	
BZW22C56	♦ALGG	215 - 59
BZW22C62	♦ALGG	216 - 63
BZW22C68	♦ALGG	217 - 44
BZW22C75	♦ALGG	218 - 27
BZW22C82	♦ALGG	219 - 7
BZW22C91	♦ALGG	219 -185
BZW22C100	♦ALGG	220 -147
BZW22C110	♦ALGG	221 -111
BZW22C120	♦ALGG	222 - 63
BZW22C130	♦ALGG	223 - 18
BZW22C150	♦ALGG	224 - 50
BZW22C160	♦ALGG	224 -178
BZW22C180	♦ALGG	226 - 6
BZW22C200	♦ALGG	227 - 2
BZW25-12	♦THEF	322 - 70
BZW25-12B	♦THEF	322 - 71
BZW25-24	♦THEF	322 - 72
BZW25-24B	♦THEF	322 - 73
BZW25-47	♦THEF	322 - 74
BZW25-47B	♦THEF	322 - 75
BZW25-120	♦THEF	322 - 76
BZW25-120B	♦THEF	322 - 77
BZW30-12	♦THEF	341 - 4
BZW30-13	♦THEF	322 - 78
BZW30-15	♦THEF	322 - 79
BZW30-16	♦THEF	322 - 80
BZW30-18	♦THEF	322 - 81
BZW30-19	♦THEF	322 - 82
BZW30-22	♦THEF	322 - 83
BZW30-24	♦THEF	341 - 5
BZW30-27	♦THEF	341 - 6
BZW30-29	♦THEF	322 - 84
BZW30-32	♦THEF	322 - 85
BZW30-35	♦THEF	322 - 86

Δ-Registered with JEDEC by this manufacturer

♦-Mfr's data sheet available in microfilm service

1. TYPE No. CROSS INDEX

IN TYPE NUMBER SEQUENCE

TYPE No.	MFRS	Pg&Line
BZW30-38	♦THEF	322 - 87
BZW30-41	♦THEF	322 - 88
BZW30-45	♦THEF	322 - 89
BZW30-50	♦THEF	322 - 90
BZW30-55	♦THEF	322 - 91
BZW30-61	♦THEF	322 - 92
BZW30-66	♦THEF	322 - 93
BZW30-74	♦THEF	322 - 94
BZW30-81	♦THEF	322 - 95
BZW30-89	♦THEF	322 - 96
BZW30-97	♦THEF	322 - 97
BZW30-105	♦THEF	322 - 98
BZW30-121	♦THEF	322 - 99
BZW30-130	♦THEF	322 -100
BZW30-138	♦THEF	322 -101
BZW30-146	♦THEF	322 -102
BZW30-162	♦THEF	322 -103
BZW30-175	♦THEF	322 -104
BZW30-202	♦THEF	322 -105
BZW30-243	♦THEF	322 -106
BZW30-283	♦THEF	322 -107
BZW30-324	♦THEF	322 -108
BZW30-405	♦THEF	322 -109
BZW30-486	♦THEF	322 -110
BZW50-8V2	♦FGRS	341 - 7
	THEF	
BZW50-10	♦FGRS	341 - 8
	THEF	
BZW50-12	♦FGRS	341 - 9
	THEF	
BZW50-12B	THEF	341 - 10
BZW50-15	♦FGRS	341 - 11
	THEF	
BZW50-15B	THEF	341 - 12
BZW50-18	♦FGRS	341 - 13
	THEF	
BZW50-18B	THEF	341 - 14
BZW50-22	♦FGRS	341 - 15
	THEF	
BZW50-22B	THEF	341 - 16
BZW50-27	♦FGRS	341 - 17
	THEF	
BZW50-27B	THEF	341 - 18
BZW50-33	♦FGRS	341 - 19
	THEF	
BZW50-33B	THEF	341 - 20
BZW50-39	♦FGRS	341 - 21
	THEF	
BZW50-39B	THEF	341 - 22
BZW50-47	♦FGRS	341 - 23
	THEF	
BZW50-47B	THEF	341 - 24
BZW50-56	♦FGRS	341 - 25
	THEF	
BZW50-56B	THEF	341 - 26
BZW50-68	♦FGRS	341 - 27
	THEF	
BZW50-68B	THEF	341 - 28
BZW50-82	♦FGRS	341 - 29
	THEF	
BZW50-82B	THEF	341 - 30
BZW50-100	♦FGRS	341 - 31
	THEF	
BZW50-100B	THEF	341 - 32
BZW50-120	♦FGRS	341 - 33
	THEF	
BZW50-120B	THEF	341 - 34
BZW50-150	♦FGRS	341 - 35
	THEF	
BZW50-150B	THEF	341 - 36
BZW50-180	♦FGRS	341 - 37
	THEF	
BZW50-180B	THEF	341 - 38
BZW70-5V6	♦MULB	341 - 39
♦PHIN	♦RTCF	
	♦VALG	
BZW70-6V2	♦MULB	341 - 40
♦PHIN	♦RTCF	
	♦VALG	
BZW70-6V8	♦MULB	341 - 41
PHIN	♦RTCF	
	♦VALG	
BZW70-7V5	♦MULB	341 - 42
♦PHIN	♦RTCF	
	♦VALG	
BZW70-8V2	♦MULB	341 - 43
♦PHIN	♦RTCF	
	♦VALG	
BZW70-9V1	♦MULB	341 - 44
♦PHIN	♦RTCF	
	♦VALG	
BZW70-10	♦MULB	341 - 45
♦PHIN	♦RTCF	
	♦VALG	
BZW70-11	♦MULB	341 - 46
♦PHIN	♦RTCF	
	♦VALG	
BZW70-12	♦MULB	341 - 47
♦PHIN	♦RTCF	
	♦VALG	
BZW70-13	♦MULB	341 - 48
♦PHIN	♦RTCF	
	♦VALG	
BZW70-15	♦MULB	341 - 49
♦PHIN	♦RTCF	
	♦VALG	
BZW70-16	♦MULB	341 - 50
♦PHIN	♦RTCF	
	♦VALG	
BZW70-18	♦MULB	341 - 51
♦PHIN	♦RTCF	
	♦VALG	
BZW70-20	♦MULB	341 - 52
cont.next col.		

TYPE No.	MFRS	Pg&Line
BZW70-20		
(cont.)	♦PHIN	
♦RTCF	♦VALG	
BZW70-22	♦MULB	341 - 53
♦PHIN	♦RTCF	
	♦VALG	
BZW70-24	♦MULB	341 - 54
♦PHIN	♦RTCF	
	♦VALG	
BZW70-27	♦MULB	341 - 55
♦PHIN	♦RTCF	
	♦VALG	
BZW70-30	♦MULB	341 - 56
♦PHIN	♦RTCF	
	♦VALG	
BZW70-33	♦MULB	341 - 57
♦PHIN	♦RTCF	
	♦VALG	
BZW70-36	♦MULB	341 - 58
♦PHIN	♦RTCF	
	♦VALG	
BZW70-39	♦MULB	341 - 59
♦PHIN	♦RTCF	
	♦VALG	
BZW70-43	♦MULB	341 - 60
♦PHIN	♦RTCF	
	♦VALG	
BZW70-47	♦MULB	341 - 61
♦PHIN	♦RTCF	
	♦VALG	
BZW70-51	♦MULB	341 - 62
♦PHIN	♦RTCF	
	♦VALG	
BZW70-56	♦MULB	341 - 63
♦PHIN	♦RTCF	
	♦VALG	
BZW70-62	♦MULB	341 - 64
♦PHIN	♦RTCF	
	♦VALG	
BZW86-7V5	♦MULB	357 - 71
♦PHIN	VALG	
BZW86-8V2	♦MULB	357 - 72
♦PHIN	♦VALG	
BZW86-9V1	♦MULB	357 - 73
♦PHIN	♦RTCF	
	♦VALG	
BZW86-10	♦MULB	357 - 74
♦PHIN	♦VALG	
BZW86-11	♦MULB	357 - 75
♦PHIN	♦VALG	
BZW86-12	♦MULB	357 - 76
♦PHIN	♦VALG	
BZW86-13	♦MULB	357 - 77
♦PHIN	♦VALG	
BZW86-15	♦MULB	357 - 78
♦PHIN	♦VALG	
BZW86-16	♦MULB	357 - 79
♦PHIN	♦VALG	
BZW86-18	♦MULB	357 - 80
♦PHIN	♦VALG	
BZW86-20	♦MULB	357 - 81
♦PHIN	♦VALG	
BZW86-22	♦MULB	357 - 82
♦PHIN	♦VALG	
BZW86-24	♦MULB	357 - 83
♦PHIN	♦VALG	
BZW86-27	♦MULB	357 - 84
♦PHIN	♦VALG	
BZW86-30	♦MULB	357 - 85
♦PHIN	♦VALG	
BZW86-33	♦MULB	357 - 86
♦PHIN	♦VALG	
BZW86-36	♦MULB	357 - 87
♦PHIN	♦VALG	
BZW86-39	♦MULB	357 - 88
♦PHIN	♦RTCF	
	♦VALG	
BZW86-43	♦MULB	357 - 89
♦PHIN	♦VALG	
BZW86-47	♦MULB	357 - 90
♦PHIN	♦VALG	
BZW86-51	♦MULB	357 - 91
♦PHIN	♦VALG	
BZW86-56	♦MULB	357 - 92
♦PHIN	♦VALG	
BZW86-62	♦MULB	357 - 93
♦PHIN	♦RTCF	
	♦VALG	
BZW91-5V6	♦MULB	357 - 94
♦PHIN	♦RTCF	
	♦VALG	
BZW91-6V2	♦MULB	357 - 95
♦PHIN	♦RTCF	
	♦VALG	
BZW91-6V8	♦MULB	357 - 96
♦PHIN	♦RTCF	
	♦VALG	
BZW91-7V5	♦MULB	357 - 97
♦PHIN	♦RTCF	
	♦VALG	
BZW91-8V2	♦MULB	357 - 98
♦PHIN	♦RTCF	
	♦VALG	
BZW91-9V1	♦MULB	357 - 99
♦PHIN	♦RTCF	
	♦VALG	
BZW91-10	♦MULB	357 -100
♦PHIN	♦RTCF	
	♦VALG	
BZW91-11	♦MULB	357 -101
♦PHIN	♦RTCF	
	♦VALG	
BZW91-12	♦MULB	357 -102
cont.next col.		

TYPE No.	MFRS	Pg&Line
BZW91-12		
(cont.)	♦PHIN	
♦RTCF	♦VALG	
BZW91-13	♦MULB	357 -103
♦PHIN	♦RTCF	
	♦VALG	
BZW91-15	♦MULB	357 -104
♦PHIN	♦RTCF	
	♦VALG	
BZW91-16	♦MULB	357 -105
♦PHIN	♦RTCF	
	♦VALG	
BZW91-18	♦MULB	357 -106
♦PHIN	♦RTCF	
	♦VALG	
BZW91-20	♦MULB	357 -107
♦PHIN	♦RTCF	
	♦VALG	
BZW91-22	♦MULB	357 -108
♦PHIN	♦RTCF	
	♦VALG	
BZW91-24	♦MULB	357 -109
♦PHIN	♦RTCF	
	♦VALG	
BZW91-27	♦MULB	357 -110
♦PHIN	♦RTCF	
	♦VALG	
BZW91-30	♦MULB	358 - 1
♦PHIN	♦RTCF	
	♦VALG	
BZW91-33	♦MULB	358 - 2
♦PHIN	♦RTCF	
	♦VALG	
BZW91-36	♦MULB	358 - 3
♦PHIN	♦RTCF	
	♦VALG	
BZW91-39	♦MULB	358 - 4
PHIN	♦RTCF	
	♦VALG	
BZW91-43	♦MULB	358 - 5
♦PHIN	♦RTCF	
	♦VALG	
BZW91-47	♦MULB	358 - 6
♦PHIN	♦RTCF	
	♦VALG	
BZW91-51	♦MULB	358 - 7
♦PHIN	♦RTCF	
	♦VALG	
BZW91-56	♦MULB	358 - 8
♦PHIN	♦RTCF	
	♦VALG	
BZW91-62	♦MULB	358 - 9
♦PHIN	♦RTCF	
	♦VALG	
BZW93-5V6	MULB	358 - 10
PHIN	RTCF	
	VALG	
BZW93-6V2	MULB	358 - 11
PHIN	RTCF	
	VALG	
BZW93-6V8	MULB	358 - 12
PHIN	RTCF	
	VALG	
BZW93-7V5	MULB	358 - 13
PHIN	RTCF	
	VALG	
BZW93-8V2	MULB	358 - 14
PHIN	RTCF	
	VALG	
BZW93-9V1	MULB	358 - 15
PHIN	RTCF	
	VALG	
BZW93-10	MULB	358 - 16
PHIN	RTCF	
	VALG	
BZW93-11	MULB	358 - 17
RTCF	VALG	
BZW93-12	MULB	358 - 18
PHIN	RTCF	
	VALG	
BZW93-13	MULB	358 - 19
PHIN	RTCF	
	VALG	
BZW93-15	MULB	358 - 20
PHIN	RTCF	
	VALG	
BZW93-16	MULB	358 - 21
PHIN	RTCF	
	VALG	
BZW93-18	MULB	358 - 22
PHIN	RTCF	
	VALG	
BZW93-20	MULB	358 - 23
PHIN	RTCF	
	VALG	
BZW93-22	MULB	358 - 24
PHIN	RTCF	
	VALG	
BZW93-24	MULB	358 - 25
PHIN	RTCF	
	VALG	
BZW93-27	MULB	358 - 26
PHIN	RTCF	
	VALG	
BZW93-30	MULB	358 - 27
PHIN	RTCF	
	VALG	
BZW93-33	MULB	358 - 28
PHIN	RTCF	
	VALG	
BZW93-36	MULB	358 - 29
PHIN	RTCF	
	VALG	

TYPE No.	MFRS	Pg&Line
BZW93-39	MULB	358 - 30
PHIN	RTCF	
	VALG	
BZW93-43	MULB	358 - 31
PHIN	RTCF	
	VALG	
BZW93-47	MULB	358 - 32
PHIN	RTCF	
	VALG	
BZW93-51	MULB	358 - 33
PHIN	RTCF	
	VALG	
BZW93-56	MULB	358 - 34
PHIN	RTCF	
	VALG	
BZW93-62	MULB	358 - 35
PHIN	RTCF	
	VALG	
BZX46C2V7	MULB	164 -166
PHIN	RTCF	
♦THEF	VALG	
BZX46C3V	MULB	165 - 99
PHIN	RTCF	
	VALG	
BZX46C3V0	♦THEF	165 -100
BZX46C3V3	MULB	166 - 35
PHIN	RTCF	
♦THEF	VALG	
BZX46C3V6	MULB	167 - 1
PHIN	RTCF	
♦THEF	VALG	
BZX46C3V9	MULB	167 -176
PHIN	RTCF	
♦THEF	VALG	
BZX46C4V3	MULB	168 -201
PHIN	RTCF	
♦THEF	VALG	
BZX46C4V7	MULB	170 - 34
PHIN	RTCF	
♦THEF	VALG	
BZX46C5V1	♦MULB	171 -115
♦PHIN	♦RTCF	
♦THEF	♦VALG	
BZX46C5V6	♦MULB	172 -203
♦PHIN	♦RTCF	
♦THEF	♦VALG	
BZX46C6V2	♦MULB	175 - 55
♦PHIN	♦RTCF	
♦THEF	♦VALG	
BZX46C6V8	♦MULB	178 - 24
♦PHIN	♦RTCF	
♦THEF	♦VALG	
BZX46C7V5	♦MULB	180 - 23
♦PHIN	♦RTCF	
♦THEF	♦VALG	
BZX46C8V2	♦MULB	182 - 2
♦PHIN	♦RTCF	
♦THEF	♦VALG	
BZX46C9V1	♦MULB	185 - 37
♦PHIN	♦RTCF	
♦THEF	♦VALG	
BZX46C10	♦MULB	187 - 81
♦PHIN	♦RTCF	
♦THEF	♦VALG	
BZX46C11	♦MULB	189 - 22
♦PHIN	♦RTCF	
♦THEF	♦VALG	
BZX46C12	♦MULB	190 -193
♦PHIN	♦RTCF	
♦THEF	♦VALG	
BZX46C13	♦MULB	192 -159
♦PHIN	♦RTCF	
♦THEF	♦VALG	
BZX46C15	♦MULB	194 -180
♦PHIN	♦RTCF	
♦THEF	♦VALG	
BZX46C16	♦MULB	196 - 87
♦PHIN	♦RTCF	
♦THEF	♦VALG	
BZX46C18	♦MULB	198 - 92
♦PHIN	♦RTCF	
♦THEF	♦VALG	
BZX46C20	♦MULB	200 - 87
♦PHIN	♦RTCF	
♦THEF	♦VALG	
BZX46C22	♦MULB	201 -197
♦PHIN	♦RTCF	
♦THEF	♦VALG	
BZX46C24	♦MULB	203 - 94
♦PHIN	♦RTCF	
♦THEF	♦VALG	
BZX46C27	♦MULB	205 - 28
♦PHIN	♦RTCF	
♦THEF	♦VALG	
BZX46C30	♦MULB	206 -164
♦PHIN	♦RTCF	
♦THEF	♦VALG	
BZX46C33	♦MULB	208 - 52
♦PHIN	♦RTCF	
♦THEF	♦VALG	
BZX46C36	♦MULB	209 -129
♦PHIN	♦RTCF	
♦THEF	♦VALG	
BZX46C39	♦MULB	210 -165
♦PHIN	♦RTCF	
♦THEF	♦VALG	
BZX46C43	♦MULB	211 -183
♦PHIN	♦RTCF	
♦THEF	♦VALG	
BZX46C47	♦MULB	212 -195
♦PHIN	♦RTCF	
THEF	♦VALG	
BZX46C51	♦MULB	214 - 3
cont.next col.		

TYPE No.	MFRS	Pg&Line
BZX46C51		
(cont.)	♦PHIN	
♦RTCF	THEF	
	♦VALG	
BZX46C56	♦MULB	214 -187
♦PHIN	♦RTCF	
THEF	♦VALG	
BZX46C62	♦MULB	215 -197
♦PHIN	♦RTCF	
THEF	♦VALG	
BZX46C68	THEF	216 -170
BZX46C75	THEF	217 -158
BZX46C82	THEF	218 -140
BZX46C91	THEF	219 -126
BZX46C100	THEF	220 - 83
BZX46C110	THEF	221 - 52
BZX55C0V8	♦ITTG	163 - 42
SIEG	THEF	
BZX55C2V4	♦ALGG	164 - 50
♦APX	♦MULB	
♦PHIN	♦RTCF	
THEF	♦VALG	
BZX55C2V7	♦ALGG	164 -167
♦APX	♦FGRS	
♦ITTG	♦MULB	
♦PHIN	♦RTCF	
♦THEF	♦VALG	
BZX55C3V	♦FGRS	165 -101
♦MULB	♦PHIN	
♦RTCF	♦VALG	
BZX55C3V0	♦ALGG	165 -102
♦APX	♦ITTG	
	♦THEF	
BZX55C3V3	♦ALGG	166 - 36
♦APX	♦FGRS	
♦ITTG	♦MULB	
♦PHIN	♦RTCF	
♦THEF	♦VALG	
BZX55C3V6	♦ALGG	167 - 2
♦APX	♦FGRS	
♦ITTG	♦MULB	
♦PHIN	♦RTCF	
♦THEF	♦VALG	
BZX55C3V9	♦ALGG	167 -177
♦APX	♦FGRS	
♦ITTG	♦MULB	
♦PHIN	♦RTCF	
SPR	♦THEF	
	♦VALG	
BZX55C4V3	♦ALGG	168 -202
♦APX	♦FGRS	
♦ITTG	♦MULB	
♦PHIN	♦RTCF	
SPR	♦THEF	
	♦VALG	
BZX55C4V7	♦ALGG	170 - 35
♦APX	♦FGRS	
♦ITTG	♦MULB	
♦PHIN	♦RTCF	
SPR	♦THEF	
	♦VALG	
BZX55C5V1	♦ALGG	171 -116
♦APX	♦FGRS	
♦ITTG	♦MULB	
♦PHIN	♦RTCF	
SPR	♦THEF	
	♦VALG	
BZX55C5V6	♦ALGG	172 -204
♦APX	♦FGRS	
♦ITTG	♦MULB	
♦PHIN	♦RTCF	
SIEG	♦THEF	
	♦VALG	
BZX55C6V2	♦ALGG	175 - 56
♦APX	♦FGRS	
♦ITTG	♦MULB	
♦PHIN	♦RTCF	
SIEG	SPR	
♦THEF	♦VALG	
BZX55C6V8	♦ALGG	178 - 25
♦APX	♦FGRS	
♦ITTG	♦MULB	
♦PHIN	♦RTCF	
SIEG	SPR	
♦THEF	♦VALG	
BZX55C7V5	♦ALGG	180 - 24
♦APX	♦FGRS	
♦ITTG	♦MULB	
♦PHIN	♦RTCF	
SIEG	SPR	
♦THEF	♦VALG	
BZX55C8V2	♦ALGG	182 - 3
♦APX	♦FGRS	
♦ITTG	♦MULB	
♦PHIN	♦RTCF	
SIEG	SPR	
♦THEF	♦VALG	
BZX55C9V1	♦ALGG	185 - 38
♦APX	♦FGRS	
♦ITTG	♦MULB	
♦PHIN	♦RTCF	
SIEG	SPR	
♦THEF	♦VALG	
BZX55C10	♦ALGG	187 - 82
♦APX	♦FGRS	
♦ITTG	♦MULB	
♦PHIN	♦RTCF	
SPR	♦THEF	
	♦VALG	
BZX55C10V	FGRS	187 - 83
BZX55C11	♦ALGG	189 - 23
♦APX	♦FGRS	
♦ITTG	♦MULB	
cont.next page		

Δ-Registered with JEDEC by this manufacturer

♦-Mfr's data sheet available in microfilm service

1. TYPE No. CROSS INDEX

IN TYPE NUMBER SEQUENCE

TYPE No.	MFRS	Pg&Line
BZX55C11		
(cont.)	♦PHIN	
♦RTCF	SPR	
♦THEF	♦VALG	
BZX55C11V	FGRS	189 - 24
BZX55C12	♦ALGG	190 -194
♦APX	♦FGRS	
♦ITTG	♦MULB	
♦PHIN	♦RTCF	
SPR	♦THEF	
	♦VALG	
BZX55C12V	FGRS	190 -195
BZX55C13	♦ALGG	192 -160
♦APX	♦FGRS	
♦ITTG	♦MULB	
♦PHIN	♦RTCF	
SPR	♦THEF	
	♦VALG	
BZX55C13V	FGRS	192 -161
BZX55C15	♦ALGG	194 -181
♦APX	♦FGRS	
♦ITTG	♦MULB	
♦PHIN	♦RTCF	
SPR	♦THEF	
	♦VALG	
BZX55C15V	FGRS	194 -182
BZX55C16	♦ALGG	196 - 88
♦APX	♦FGRS	
♦ITTG	♦MULB	
♦PHIN	♦RTCF	
SPR	♦THEF	
	♦VALG	
BZX55C16V	FGRS	196 - 89
BZX55C18	♦ALGG	198 - 93
♦APX	♦FGRS	
♦ITTG	♦MULB	
♦PHIN	♦RTCF	
SPR	♦THEF	
	♦VALG	
BZX55C18V	FGRS	198 - 94
BZX55C20	♦ALGG	200 - 88
♦APX	♦FGRS	
♦ITTG	♦MULB	
♦PHIN	♦RTCF	
SPR	♦THEF	
	♦VALG	
BZX55C20V	FGRS	200 - 89
BZX55C22	♦ALGG	200 - 90
♦APX	♦FGRS	
♦ITTG	♦MULB	
♦PHIN	♦RTCF	
SPR	♦THEF	
	♦VALG	
BZX55C22V	FGRS	201 -198
BZX55C24	♦ALGG	200 - 91
♦APX	♦FGRS	
♦ITTG	♦MULB	
♦PHIN	♦RTCF	
SPR	♦THEF	
	♦VALG	
BZX55C24V	FGRS	203 - 95
BZX55C27	♦ALGG	200 - 92
♦APX	♦FGRS	
♦ITTG	♦MULB	
♦PHIN	♦RTCF	
SPR	THEF	
	♦VALG	
BZX55C27V	FGRS	205 - 29
BZX55C30	♦ALGG	200 - 93
♦APX	♦FGRS	
♦ITTG	♦MULB	
♦PHIN	♦RTCF	
SPR	THEF	
	♦VALG	
BZX55C30V	FGRS	206 -165
BZX55C33	♦ALGG	200 - 94
♦APX	♦FGRS	
♦ITTG	♦MULB	
♦PHIN	♦RTCF	
SPR	THEF	
	♦VALG	
BZX55C33V	FGRS	208 - 53
BZX55C36	♦ALGG	209 -130
♦APX	♦MULB	
♦PHIN	♦RTCF	
SPR	THEF	
	♦VALG	
BZX55C39	♦ALGG	210 -166
♦APX	♦MULB	
♦PHIN	♦RTCF	
SPR	THEF	
	♦VALG	
BZX55C43	♦ALGG	211 -184
♦APX	♦MULB	
♦PHIN	♦RTCF	
SPR	THEF	
	♦VALG	
BZX55C47	♦ALGG	212 -196
♦APX	♦MULB	
♦PHIN	♦RTCF	
SPR	THEF	
	♦VALG	
BZX55C51	♦ALGG	215 -130
♦APX	♦MULB	
♦PHIN	♦RTCF	
SPR	THEF	
	♦VALG	
BZX55C56	♦ALGG	214 -188
♦APX	♦MULB	
♦PHIN	♦RTCF	
SPR	THEF	
	♦VALG	
BZX55C62	♦ALGG	215 -198
cont.next col.		

TYPE No.	MFRS	Pg&Line
BZX55C62		
(cont.)	♦APX	
♦MULB	♦PHIN	
♦RTCF	THEF	
	♦VALG	
BZX55C68	♦ALGG	216 -176
♦APX	♦MULB	
♦PHIN	♦RTCF	
THEF	♦VALG	
BZX55C75	♦ALGG	217 -164
♦APX	♦MULB	
♦PHIN	♦RTCF	
THEF	♦VALG	
BZX55C82	♦ALGG	218 -141
	THEF	
BZX55C91	♦ALGG	219 -127
	THEF	
BZX55C100	♦ALGG	220 - 84
	THEF	
BZX55C110	♦ALGG	221 - 53
	THEF	
BZX55C120	♦ALGG	222 - 2
	THEF	
BZX55C130	♦ALGG	222 -147
	THEF	
BZX55C150	♦ALGG	223 -172
	THEF	
BZX55C160	♦ALGG	224 -125
	THEF	
BZX55C180	♦ALGG	225 -129
	THEF	
BZX55C200	♦ALGG	226 -134
	THEF	
BZX55D5V6	SIEG	172 - 98
BZX55D6V8	SIEG	177 -138
BZX55D8V2	SIEG	181 -108
BZX55D10	SIEG	186 -187
BZX58C6V8	CEN	177 -154
BZX58C7V5	CEN	179 -147
BZX58C8V2	CEN	181 -130
BZX58C9V1	CEN	184 -162
BZX58C10	CEN	186 -206
BZX59C11	CEN	188 -167
BZX59C12	CEN	190 -117
BZX59C13	CEN	192 -105
BZX59C15	CEN	194 -125
BZX59C16	CEN	196 - 35
BZX59C18	CEN	198 - 34
BZX59C20	CEN	200 - 39
BZX59C22	CEN	201 -138
BZX59C24	CEN	203 - 49
BZX59C27	CEN	204 -188
BZX60C30	CEN	206 -120
BZX60C33	CEN	208 - 5
BZX60C36	CEN	209 - 94
BZX60C39	CEN	210 -133
BZX60C43	CEN	211 -154
BZX60C47	CEN	212 -165
BZX60C51	CEN	213 -181
BZX60C56	CEN	214 -164
BZX61C6V8	CEN	178 -147
♦MULB	♦PHIN	
♦RTCF	♦VALG	
BZX61C7V5	CEN	180 -139
♦MULB	♦PHIN	
♦RTCF	♦VALG	
BZX61C8V2	CEN	182 -128
♦MULB	♦PHIN	
♦RTCF	♦VALG	
BZX61C9V1	CEN	185 -160
♦MULB	NASG	
♦PHIN	♦RTCF	
	♦VALG	
BZX61C10	CEN	188 - 19
♦MULB	♦PHIN	
♦RTCF	♦VALG	
BZX61C11	CEN	189 -135
♦MULB	♦PHIN	
♦RTCF	♦VALG	
BZX61C12	CEN	191 -110
♦MULB	♦PHIN	
♦RTCF	♦VALG	
BZX61C13	CEN	193 - 54
♦MULB	♦PHIN	
♦RTCF	♦VALG	
BZX61C15	CEN	195 -107
♦MULB	♦PHIN	
♦RTCF	♦VALG	
BZX61C16	CEN	196 -198
♦MULB	♦PHIN	
♦RTCF	♦VALG	
BZX61C18	CEN	199 - 6
♦MULB	♦PHIN	
♦RTCF	♦VALG	
BZX61C20	CEN	200 -205
♦MULB	♦PHIN	
♦RTCF	♦VALG	
BZX61C22	CEN	202 -107
♦MULB	♦PHIN	
♦RTCF	♦VALG	
BZX61C24	CEN	203 -202
♦MULB	♦PHIN	
♦RTCF	♦VALG	
BZX61C27	CEN	205 -143
♦MULB	♦PHIN	
♦RTCF	♦VALG	
BZX61C30	CEN	207 - 67
♦MULB	♦PHIN	
♦RTCF	♦VALG	
BZX61C33	CEN	208 -160
♦MULB	♦PHIN	
♦RTCF	♦VALG	
BZX61C36	CEN	210 - 12
cont.next col.		

TYPE No.	MFRS	Pg&Line
BZX61C36		
(cont.)	♦MULB	
♦PHIN	♦RTCF	
	♦VALG	
BZX61C39	CEN	211 - 51
♦MULB	♦PHIN	
♦RTCF	♦VALG	
BZX61C43	CEN	212 - 58
♦MULB	♦PHIN	
♦RTCF	♦VALG	
BZX61C47	CEN	213 - 74
♦MULB	♦PHIN	
♦RTCF	♦VALG	
BZX61C51	CEN	214 - 69
♦MULB	♦PHIN	
♦RTCF	♦VALG	
BZX61C56	CEN	215 - 60
♦MULB	♦PHIN	
♦RTCF	♦VALG	
BZX61C62	CEN	216 - 64
♦MULB	♦PHIN	
♦RTCF	♦VALG	
BZX61C68	CEN	217 - 45
♦MULB	♦PHIN	
♦RTCF	♦VALG	
BZX61C75	CEN	218 - 28
♦MULB	♦PHIN	
♦RTCF	♦VALG	
BZX61C82	♦MULB	218 -116
♦PHIN	♦RTCF	
	♦VALG	
BZX61C91	♦MULB	219 -109
♦PHIN	♦RTCF	
	♦VALG	
BZX61C100	♦MULB	220 - 58
♦PHIN	♦RTCF	
	♦VALG	
BZX61C110	♦MULB	221 - 37
♦PHIN	♦RTCF	
	♦VALG	
BZX61C120	♦MULB	221 -172
♦PHIN	♦RTCF	
	♦VALG	
BZX61C130	♦MULB	222 -131
♦PHIN	♦RTCF	
	♦VALG	
BZX61C150	♦MULB	223 -155
♦PHIN	♦RTCF	
	♦VALG	
BZX61C160	♦MULB	224 -111
♦PHIN	♦RTCF	
	♦VALG	
BZX61C180	♦MULB	225 -109
♦PHIN	♦RTCF	
	♦VALG	
BZX61C200	♦MULB	226 -120
♦PHIN	♦RTCF	
	♦VALG	
BZX62	MISI	163 - 38
	THEF	
BZX70C7V5	CEN	180 -171
♦MULB	♦PHIN	
♦RTCF	♦VALG	
BZX70C8V2	CEN	182 -160
♦MULB	♦PHIN	
♦RTCF	♦VALG	
BZX70C9V1	CEN	185 -195
♦MULB	♦PHIN	
♦RTCF	♦VALG	
BZX70C10	CEN	188 - 60
♦MULB	♦PHIN	
♦RTCF	♦VALG	
BZX70C11	CEN	189 -174
♦MULB	♦PHIN	
♦RTCF	♦VALG	
BZX70C12	CEN	191 -149
♦MULB	♦PHIN	
♦RTCF	♦VALG	
BZX70C13	CEN	193 - 90
♦MULB	♦PHIN	
♦RTCF	♦VALG	
BZX70C15	CEN	195 -145
♦MULB	♦PHIN	
♦RTCF	♦VALG	
BZX70C16	CEN	197 - 24
♦MULB	♦PHIN	
♦RTCF	♦VALG	
BZX70C18	CEN	199 - 43
♦MULB	♦PHIN	
♦RTCF	♦VALG	
BZX70C20	CEN	201 - 36
♦MULB	♦PHIN	
♦RTCF	♦VALG	
BZX70C22	CEN	202 -143
♦MULB	♦PHIN	
♦RTCF	♦VALG	
BZX70C24	CEN	204 - 30
♦MULB	♦PHIN	
♦RTCF	♦VALG	
BZX70C27	CEN	205 -184
♦MULB	♦PHIN	
♦RTCF	♦VALG	
BZX70C30	CEN	207 -108
♦MULB	♦PHIN	
♦RTCF	♦VALG	
BZX70C33	CEN	208 -201
♦MULB	♦PHIN	
♦RTCF	♦VALG	
BZX70C36	CEN	210 - 50
♦MULB	♦PHIN	
♦RTCF	♦VALG	
BZX70C39	CEN	211 - 87
♦MULB	♦PHIN	
♦RTCF	♦VALG	

TYPE No.	MFRS	Pg&Line
BZX70C43	CEN	212 - 98
♦MULB	♦PHIN	
♦RTCF	♦VALG	
BZX70C47	CEN	213 -115
♦MULB	♦PHIN	
♦RTCF	♦VALG	
BZX70C51	CEN	214 -110
♦MULB	♦PHIN	
♦RTCF	♦VALG	
BZX70C56	CEN	215 - 99
♦MULB	♦PHIN	
♦RTCF	♦VALG	
BZX70C62	CEN	216 -103
♦MULB	♦PHIN	
♦RTCF	♦VALG	
BZX70C68	CEN	217 - 84
♦MULB	♦PHIN	
♦RTCF	♦VALG	
BZX70C75	CEN	218 - 67
♦MULB	♦PHIN	
♦RTCF	♦VALG	
BZX75C1V4	♦APD	163 - 79
♦APX	♦MULB	
♦PHIN	♦RTCF	
	♦VALG	
BZX75C2V1	♦APD	163 -159
♦APX	♦MULB	
♦PHIN	♦RTCF	
	♦VALG	
BZX75C2V8	♦APD	165 - 14
♦APX	♦MULB	
♦PHIN	♦RTCF	
	♦VALG	
BZX75C3V6	♦APD	166 -180
♦APX	♦MULB	
♦PHIN	♦RTCF	
	♦VALG	
BZX78C5V1	♦MULB	171 -162
♦PHIN	VALG	
BZX78C5V6	♦MULB	173 - 45
♦PHIN	♦VALG	
BZX78C6V2	♦MULB	175 -123
♦PHIN	♦VALG	
BZX78C6V8	♦MULB	178 -105
♦PHIN	♦VALG	
BZX78C7V5	♦MULB	180 - 99
♦PHIN	♦VALG	
BZX78C8V2	♦MULB	181 -101
♦PHIN	♦VALG	
BZX78C9V1	♦PHIN	185 -114
	♦VALG	
BZX78C10	♦MULB	187 -173
♦PHIN	♦VALG	
BZX78C11	♦MULB	189 - 87
♦PHIN	♦VALG	
BZX78C12	♦MULB	191 - 55
♦PHIN	♦VALG	
BZX78C13	♦MULB	193 - 6
♦PHIN	♦VALG	
BZX78C15	♦MULB	195 - 55
♦PHIN	♦VALG	
BZX78C16	♦MULB	196 -148
♦PHIN	♦VALG	
BZX78C18	♦MULB	198 -164
♦PHIN	♦VALG	
BZX78C20	♦MULB	200 -156
♦PHIN	♦VALG	
BZX78C22	♦MULB	202 - 56
♦PHIN	♦VALG	
BZX78C24	♦MULB	203 -154
♦PHIN	♦VALG	
BZX78C27	♦MULB	205 - 92
♦PHIN	♦VALG	
BZX78C30	♦MULB	207 - 18
♦PHIN	♦VALG	
BZX78C33	♦MULB	208 -111
♦PHIN	♦VALG	
BZX78C36	♦MULB	209 -176
♦PHIN	♦VALG	
BZX78C39	♦MULB	210 -200
♦PHIN	♦VALG	
BZX78C43	♦MULB	212 - 23
♦PHIN	♦VALG	
BZX78C47	♦MULB	213 - 27
♦PHIN	♦VALG	
BZX78C51	♦MULB	214 - 27
♦PHIN	♦VALG	
BZX78C56	♦MULB	215 - 12
♦PHIN	♦VALG	
BZX78C62	♦MULB	216 - 19
♦PHIN	♦VALG	
BZX78C68	♦MULB	216 -194
♦PHIN	♦VALG	
BZX78C75	♦MULB	217 -182
♦PHIN	VALG	
BZX79B2V4	♦APX	164 - 27
MULB	♦PHIN	
♦RTCF	♦VALG	
BZX79B2V7	♦APX	164 -141
MULB	♦PHIN	
♦RTCF	♦VALG	
BZX79B3V0	♦APX	165 - 67
MULB	♦PHIN	
♦RTCF	♦VALG	
BZX79B3V3	♦APX	165 -166
MULB	♦PHIN	
♦RTCF	♦VALG	
BZX79B3V6	♦APX	166 -172
MULB	♦PHIN	
♦RTCF	♦VALG	
BZX79B3V9	♦APX	167 -138
MULB	♦PHIN	
♦RTCF	♦VALG	

TYPE No.	MFRS	Pg&Line
BZX79B4V3	♦APX	168 -150
MULB	♦PHIN	
♦RTCF	♦VALG	
BZX79B4V7	♦APX	169 -188
MULB	♦PHIN	
	♦VALG	
BZX79B5V1	♦APX	171 - 64
MULB	♦PHIN	
♦RTCF	♦VALG	
BZX79B5V6	♦APX	172 -146
MULB	♦PHIN	
♦RTCF	♦VALG	
BZX79B6V2	♦APX	174 -159
MULB	♦PHIN	
♦RTCF	♦VALG	
BZX79B6V8	♦APX	177 -184
MULB	♦PHIN	
♦RTCF	♦VALG	
BZX79B7V5	♦APX	179 -175
MULB	♦PHIN	
♦RTCF	♦VALG	
BZX79B8V2	♦APX	181 -156
MULB	♦PHIN	
♦RTCF	♦VALG	
BZX79B9V1	♦APX	184 -203
MULB	♦PHIN	
♦RTCF	♦VALG	
BZX79B10	♦APX	187 - 29
MULB	♦PHIN	
♦RTCF	♦VALG	
BZX79B11	♦APX	188 -188
MULB	♦PHIN	
♦RTCF	♦VALG	
BZX79B12	♦APX	190 -147
MULB	♦PHIN	
♦RTCF	♦VALG	
BZX79B13	♦APX	192 -123
MULB	♦PHIN	
♦RTCF	♦VALG	
BZX79B15	♦APX	194 -146
MULB	♦PHIN	
♦RTCF	♦VALG	
BZX79B16	♦APX	196 - 52
MULB	♦PHIN	
♦RTCF	♦VALG	
BZX79B18	♦APX	198 - 56
MULB	♦PHIN	
♦RTCF	♦VALG	
BZX79B20	♦APX	200 - 57
MULB	♦PHIN	
♦RTCF	♦VALG	
BZX79B22	♦APX	201 -161
MULB	♦PHIN	
♦RTCF	♦VALG	
BZX79B24	♦APX	203 - 65
MULB	♦PHIN	
♦RTCF	♦VALG	
BZX79B27	♦APX	204 -205
MULB	♦PHIN	
♦RTCF	♦VALG	
BZX79B30	♦APX	206 -132
MULB	♦PHIN	
♦RTCF	♦VALG	
BZX79B33	♦APX	208 - 19
MULB	♦PHIN	
♦RTCF	♦VALG	
BZX79B36	♦APX	209 -103
MULB	♦PHIN	
♦RTCF	♦VALG	
BZX79B39	♦APX	210 -141
MULB	♦PHIN	
♦RTCF	♦VALG	
BZX79B43	♦APX	211 -162
MULB	♦PHIN	
♦RTCF	♦VALG	
BZX79B47	♦APX	212 -174
MULB	♦PHIN	
♦RTCF	♦VALG	
BZX79B51	♦APX	213 -186
MULB	♦PHIN	
♦RTCF	♦VALG	
BZX79B56	♦APX	214 -171
MULB	♦PHIN	
♦RTCF	♦VALG	
BZX79B62	MULB	215 -181
♦PHIN	♦RTCF	
	♦VALG	
BZX79B68	MULB	216 -153
♦PHIN	♦RTCF	
	♦VALG	
BZX79B75	MULB	217 -144
♦PHIN	♦RTCF	
	♦VALG	
BZX79C2V4	♦APX	164 - 29
MULB	♦PHIN	
♦RTCF	VALG	
BZX79C2V7	♦APX	164 -144
MULB	♦PHIN	
♦RTCF	♦VALG	
BZX79C3V	♦MULB	165 -103
♦PHIN	♦RTCF	
	♦VALG	
BZX79C3V0	♦APX	165 - 72
MULB	♦PHIN	
♦RTCF	♦VALG	
BZX79C3V3	♦APX	166 - 3
MULB	♦PHIN	
♦RTCF	♦VALG	
BZX79C3V6	♦APX	166 -181
MULB	♦PHIN	
♦RTCF	♦VALG	
BZX79C3V9	♦APX	167 -146
MULB	♦PHIN	
♦RTCF	♦VALG	

△-Registered with JEDEC by this manufacturer

♦-Mfr's data sheet available in microfilm service

1. TYPE No. CROSS INDEX

IN TYPE NUMBER SEQUENCE

TYPE No.	MFRS	Pg&Line
BZX79C4V3	♦APX	168 -162
MULB	♦PHIN	
♦RTCF	♦VALG	
BZX79C4V7	♦APX	169 -202
♦MULB	♦PHIN	
♦RTCF	♦VALG	
BZX79C5V1	♦APX	171 - 77
♦MULB	♦PHIN	
♦RTCF	♦VALG	
BZX79C5V6	♦APX	172 -165
♦MULB	♦PHIN	
♦RTCF	♦VALG	
BZX79C6V2	♦APX	174 -184
♦MULB	♦PHIN	
♦RTCF	♦VALG	
BZX79C6V8	♦APX	177 -204
♦MULB	♦PHIN	
♦RTCF	♦VALG	
BZX79C7V5	♦APX	179 -190
♦MULB	♦PHIN	
♦RTCF	♦VALG	
BZX79C8V2	♦APX	181 -169
♦MULB	♦PHIN	
♦RTCF	♦VALG	
BZX79C9V1	♦APX	185 - 2
♦MULB	♦PHIN	
♦RTCF	♦VALG	
BZX79C10	♦APX	187 - 44
♦MULB	♦PHIN	
♦RTCF	♦VALG	
BZX79C11	♦APX	188 -197
♦MULB	♦PHIN	
♦RTCF	♦VALG	
BZX79C12	♦APX	190 -159
♦MULB	♦PHIN	
♦RTCF	♦VALG	
BZX79C13	♦APX	192 -131
♦MULB	♦PHIN	
♦RTCF	♦VALG	
BZX79C15	♦APX	194 -155
♦MULB	♦PHIN	
♦RTCF	♦VALG	
BZX79C16	♦APX	196 - 59
♦MULB	♦PHIN	
♦RTCF	♦VALG	
BZX79C18	♦APX	198 - 65
♦MULB	♦PHIN	
♦RTCF	♦VALG	
BZX79C20	♦APX	200 - 64
♦MULB	♦PHIN	
♦RTCF	♦VALG	
BZX79C22	♦APX	201 -170
♦MULB	♦PHIN	
♦RTCF	♦VALG	
BZX79C24	♦APX	203 - 71
♦MULB	PHIN	
♦RTCF	♦VALG	
BZX79C27	♦APX	205 - 4
♦MULB	♦PHIN	
♦RTCF	♦VALG	
BZX79C30	♦APX	206 -138
♦MULB	♦PHIN	
♦RTCF	♦VALG	
BZX79C33	♦APX	208 - 26
♦MULB	♦PHIN	
♦RTCF	♦VALG	
BZX79C36	♦APX	209 -109
♦MULB	♦PHIN	
♦RTCF	♦VALG	
BZX79C39	♦APX	210 -146
♦MULB	♦PHIN	
♦RTCF	♦VALG	
BZX79C43	♦APX	211 -166
♦MULB	♦PHIN	
♦RTCF	♦VALG	
BZX79C47	♦APX	212 -178
♦MULB	♦PHIN	
♦RTCF	♦VALG	
BZX79C51	♦APX	213 -189
♦MULB	♦PHIN	
♦RTCF	♦VALG	
BZX79C56	♦APX	214 -174
♦MULB	♦PHIN	
♦RTCF	♦VALG	
BZX79C62	♦APX	215 -184
♦MULB	♦PHIN	
♦RTCF	♦VALG	
BZX79C68	♦APX	216 -157
♦MULB	♦PHIN	
♦RTCF	♦VALG	
BZX79C75	♦APX	217 -147
♦MULB	♦PHIN	
♦RTCF	♦VALG	
BZX83C0V8	MSC	163 - 43
	♦SIEG	
BZX83C2V4	MSC	164 - 51
♦SIEG	♦THEF	
BZX83C2V7	MSC	164 -168
♦SIEG	♦THEF	
BZX83C3V0	CDIL	165 -104
MSC	♦SIEG	
	♦THEF	
BZX83C3V3	CDIL	166 - 37
MSC	♦SIEG	
	♦THEF	
BZX83C3V6	CDIL	167 - 3
MSC	♦SIEG	
	♦THEF	
BZX83C3V9	CDIL	167 -178
MSC	♦SIEG	
	♦THEF	
BZX83C4V3	CDIL	168 -203
MSC	♦SIEG	
	♦THEF	

TYPE No.	MFRS	Pg&Line
BZX83C4V7	CDIL	170 - 36
MSC	♦SIEG	
	♦THEF	
BZX83C5V1	CDIL	171 -117
♦FGRS	MSC	
♦SIEG	♦THEF	
BZX83C5V6	CDIL	172 -205
♦FGRS	MSC	
♦SIEG	♦THEF	
BZX83C6V2	CDIL	175 - 57
♦FGRS	MSC	
♦SIEG	♦THEF	
BZX83C6V8	CDIL	178 - 26
♦FGRS	MSC	
♦SIEG	♦THEF	
BZX83C7V5	CDIL	180 - 25
♦FGRS	MSC	
♦SIEG	♦THEF	
BZX83C8V2	CDIL	182 - 4
♦FGRS	MSC	
♦SIEG	♦THEF	
BZX83C9V1	CDIL	185 - 39
♦FGRS	MSC	
♦SIEG	♦THEF	
BZX83C10	CDIL	187 - 84
♦FGRS	MSC	
♦SIEG	♦THEF	
BZX83C10V	FGRS	187 -122
BZX83C11	CDIL	189 - 25
♦FGRS	MSC	
♦SIEG	♦THEF	
BZX83C11V	FGRS	189 - 59
BZX83C12	CDIL	190 -196
♦FGRS	MSC	
♦SIEG	♦THEF	
BZX83C12V	FGRS	191 - 18
BZX83C13	CDIL	192 -162
♦FGRS	MSC	
♦SIEG	♦THEF	
BZX83C13V	FGRS	192 -193
BZX83C15	CDIL	194 -183
♦FGRS	MSC	
♦SIEG	♦THEF	
BZX83C15V	FGRS	195 - 22
BZX83C16	CDIL	196 - 90
♦FGRS	MSC	
♦SIEG	♦THEF	
BZX83C16V	FGRS	196 - 91
BZX83C18	CDIL	198 - 95
♦FGRS	MSC	
♦SIEG	♦THEF	
BZX83C18V	FGRS	198 - 96
BZX83C20	CDIL	200 - 95
♦FGRS	MSC	
♦SIEG	♦THEF	
BZX83C20V	FGRS	200 - 96
BZX83C22	CDIL	201 -199
♦FGRS	MSC	
♦SIEG	♦THEF	
BZX83C22V	FGRS	201 -200
BZX83C24	CDIL	203 - 96
♦FGRS	MSC	
♦SIEG	♦THEF	
BZX83C24V	FGRS	203 - 97
BZX83C27	CDIL	205 - 30
♦FGRS	MSC	
♦SIEG	♦THEF	
BZX83C27V	FGRS	205 - 31
BZX83C30	CDIL	206 -166
♦FGRS	MSC	
♦SIEG	♦THEF	
BZX83C30V	FGRS	206 -167
BZX83C33	CDIL	208 - 54
♦FGRS	MSC	
♦SIEG	♦THEF	
BZX83C33V	FGRS	208 - 55
BZX83C36	CDIL	209 -131
MSC	♦SIEG	
	♦THEF	
BZX83C39	CDIL	210 -167
MSC	♦SIEG	
	♦THEF	
BZX83C43	CDIL	211 -185
MSC	♦SIEG	
	♦THEF	
BZX83C47	CDIL	212 -197
MSC	♦SIEG	
	♦THEF	
BZX83C51	MSC	214 - 4
	♦THEF	
BZX83C56	♦THEF	214 -189
BZX83C62	♦THEF	215 -199
BZX83C68	THEF	216 -171
BZX83C75	THEF	217 -159
BZX84C2V4	♦THEF	164 - 17
BZX84C2V7	FERB	164 -131
♦MULB	♦PHIN	
♦RTCF	♦SIEG	
♦THEF	♦VALG	
BZX84C3V0	FERB	165 - 54
MULB	PHIN	
RTCF	♦SIEG	
♦THEF	VALG	
BZX84C3V3	FERB	165 -186
♦MULB	♦PHIN	
♦RTCF	♦SIEG	
♦THEF	♦VALG	
BZX84C3V6	FERB	166 -157
♦MULB	♦PHIN	
♦RTCF	♦SIEG	
♦THEF	♦VALG	
BZX84C3V9	FERB	167 -122
♦MULB	♦PHIN	

cont.next col.

TYPE No.	MFRS	Pg&Line
BZX84C3V9		
(cont.)	♦RTCF	
♦SIEG	♦THEF	
	♦VALG	
BZX84C4V3	FERB	168 -130
♦MULB	♦PHIN	
♦RTCF	♦SIEG	
♦THEF	♦VALG	
BZX84C4V7	♦APX	169 -159
FERB	♦MULB	
♦PHIN	♦RTCF	
♦SIEG	SPR	
♦THEF	♦VALG	
BZX84C5V1	♦APX	171 - 36
FERB	♦MULB	
♦PHIN	♦RTCF	
♦SIEG	SPR	
♦THEF	♦VALG	
BZX84C5V6	♦APX	172 -109
FERB	♦MULB	
♦PHIN	♦RTCF	
♦SIEG	SPR	
♦THEF	♦VALG	
BZX84C6V2	♦APX	174 - 97
FERB	♦MULB	
♦PHIN	♦RTCF	
♦SIEG	SPR	
♦THEF	♦VALG	
BZX84C6V8	♦APX	177 -148
FERB	♦MULB	
♦PHIN	♦RTCF	
♦SIEG	SPR	
♦THEF	♦VALG	
BZX84C7V5	♦APX	179 -140
FERB	♦MULB	
♦PHIN	♦RTCF	
♦SIEG	SPR	
♦THEF	♦VALG	
BZX84C8V2	♦APX	181 -119
FERB	♦MULB	
♦PHIN	♦RTCF	
♦SIEG	SPR	
♦THEF	♦VALG	
BZX84C9V1	♦APX	184 -135
FERB	♦MULB	
♦PHIN	♦RTCF	
♦SIEG	SPR	
♦THEF	♦VALG	
BZX84C10	♦APX	186 -197
FERB	♦MULB	
♦PHIN	♦RTCF	
♦SIEG	SPR	
♦THEF	♦VALG	
BZX84C11	♦APX	188 -161
FERB	♦MULB	
♦PHIN	♦RTCF	
♦SIEG	SPR	
♦THEF	♦VALG	
BZX84C12	♦APX	190 -110
FERB	♦MULB	
♦PHIN	♦RTCF	
♦SIEG	SPR	
♦THEF	♦VALG	
BZX84C13	♦APX	192 - 99
FERB	♦MULB	
♦PHIN	♦RTCF	
♦SIEG	SPR	
♦THEF	♦VALG	
BZX84C15	♦APX	194 -118
FERB	♦MULB	
♦PHIN	♦RTCF	
♦SIEG	SPR	
♦THEF	♦VALG	
BZX84C16	♦APX	196 - 29
FERB	♦MULB	
♦PHIN	♦RTCF	
♦SIEG	SPR	
♦THEF	♦VALG	
BZX84C18	♦APX	198 - 27
FERB	♦MULB	
♦PHIN	♦RTCF	
♦SIEG	SPR	
♦THEF	♦VALG	
BZX84C20	♦APX	200 - 34
FERB	♦MULB	
♦PHIN	♦RTCF	
♦SIEG	SPR	
♦THEF	♦VALG	
BZX84C22	♦APX	201 -133
FERB	♦MULB	
♦PHIN	♦RTCF	
♦SIEG	SPR	
♦THEF	♦VALG	
BZX84C24	♦APX	204 - 65
FERB	♦MULB	
♦PHIN	♦RTCF	
♦SIEG	SPR	
♦THEF	♦VALG	
BZX84C27	♦APX	204 -182
FERB	♦MULB	
♦PHIN	♦RTCF	
♦SIEG	SPR	
♦THEF	♦VALG	
BZX84C30	♦APX	206 -115
♦FERB	♦MULB	
♦PHIN	♦RTCF	
SIEG	♦SPR	
♦THEF	♦VALG	
BZX84C33	♦APX	207 -202
♦FERB	♦MULB	
♦PHIN	♦RTCF	
♦SIEG	SPR	
♦THEF	♦VALG	

TYPE No.	MFRS	Pg&Line
BZX84C36	♦APX	209 - 88
♦FERB	♦MULB	
♦PHIN	♦RTCF	
♦SIEG	♦THEF	
	♦VALG	
BZX84C39	♦APX	210 -127
♦FERB	♦MULB	
♦PHIN	♦RTCF	
♦SIEG	♦THEF	
	♦VALG	
BZX84C43	♦APX	211 -150
♦FERB	♦MULB	
♦PHIN	♦RTCF	
♦SIEG	♦THEF	
	♦VALG	
BZX84C47	♦APX	212 -161
♦FERB	♦MULB	
♦PHIN	♦RTCF	
♦SIEG	♦THEF	
	♦VALG	
BZX84C51	♦APX	213 -178
♦MULB	♦PHIN	
♦RTCF	♦THEF	
	♦VALG	
BZX84C56	♦APX	214 -160
♦MULB	♦PHIN	
♦RTCF	♦THEF	
	♦VALG	
BZX84C62	♦APX	215 -169
♦MULB	♦PHIN	
♦RTCF	♦THEF	
	♦VALG	
BZX84C68	♦APX	216 -144
♦MULB	♦PHIN	
♦RTCF	♦THEF	
	♦VALG	
BZX84C75	♦APX	217 -129
♦MULB	♦PHIN	
♦RTCF	♦THEF	
	♦VALG	
BZX85C2V7	♦ALGG	164 -193
♦FGRS	THEF	
BZX85C3V0	♦ALGG	165 -133
♦FGRS	THEF	
BZX85C3V3	♦ALGG	166 - 74
CDIL	♦FGRS	
	♦THEF	
BZX85C3V6	♦ALGG	167 - 40
CDIL	♦FGRS	
♦ITTG	♦THEF	
BZX85C3V9	♦ALGG	168 - 20
CDIL	♦FGRS	
♦ITTG	♦THEF	
BZX85C4V3	♦ALGG	169 - 42
CDIL	♦FGRS	
♦ITTG	♦THEF	
BZX85C4V7	♦ALGG	170 - 95
CDIL	♦FGRS	
♦ITTG	♦THEF	
BZX85C5V1	♦ALGG	171 -176
CDIL	♦FGRS	
♦ITTG	♦THEF	
BZX85C5V6	♦ALGG	173 - 61
CDIL	♦FGRS	
♦ITTG	♦THEF	
BZX85C6V2	♦ALGG	175 -124
CDIL	♦FGRS	
♦ITTG	♦THEF	
BZX85C6V8	♦ALGG	178 -106
CDIL	CEN	
♦FGRS	♦ITTG	
	♦THEF	
BZX85C7V5	♦ALGG	180 -100
CDIL	CEN	
♦FGRS	♦ITTG	
	♦THEF	
BZX85C8V1	MULB	181 - 88
PHIN	RTCF	
	VALG	
BZX85C8V2	♦ALGG	182 - 83
CDIL	CEN	
♦FGRS	♦ITTG	
	♦THEF	
BZX85C9V1	♦ALGG	185 -115
CDIL	CEN	
♦FGRS	♦ITTG	
	♦THEF	
BZX85C10	♦ALGG	187 -174
CDIL	CEN	
♦FGRS	♦ITTG	
	♦THEF	
BZX85C10V	FGRS	188 - 20
BZX85C11	♦ALGG	189 - 88
CDIL	CEN	
♦FGRS	♦ITTG	
	♦THEF	
BZX85C11V	FGRS	189 -136
BZX85C12	♦ALGG	191 - 56
CDIL	CEN	
♦FGRS	♦ITTG	
	♦THEF	
BZX85C12V	FGRS	191 -111
BZX85C13	♦ALGG	193 - 7
CDIL	CEN	
♦FGRS	♦ITTG	
	♦THEF	
BZX85C13V	FGRS	193 - 55
BZX85C15	♦ALGG	195 - 56
CDIL	CEN	
♦FGRS	♦ITTG	
	♦THEF	
BZX85C15V	FGRS	195 -108
BZX85C16	♦ALGG	196 -149

cont.next col.

TYPE No.	MFRS	Pg&Line
BZX85C16		
(cont.)	CDIL	
CEN	♦FGRS	
♦ITTG	♦THEF	
BZX85C16V	FGRS	196 -199
BZX85C18	♦ALGG	198 -165
CDIL	CEN	
♦FGRS	♦ITTG	
	♦THEF	
BZX85C18V	FGRS	199 - 7
BZX85C20	♦ALGG	200 -157
CDIL	CEN	
♦FGRS	♦ITTG	
	♦THEF	
BZX85C20V	FGRS	200 -206
BZX85C22	♦ALGG	202 - 57
CDIL	CEN	
♦FGRS	♦ITTG	
	♦THEF	
BZX85C22V	FGRS	202 -108
BZX85C24	♦ALGG	203 -155
CDIL	CEN	
♦FGRS	♦ITTG	
	♦THEF	
BZX85C24V	FGRS	203 -203
BZX85C27	♦ALGG	205 - 93
CDIL	CEN	
♦FGRS	♦ITTG	
	♦THEF	
BZX85C27V	FGRS	205 -144
BZX85C30	♦ALGG	207 - 19
CDIL	CEN	
♦FGRS	♦ITTG	
	♦THEF	
BZX85C30V	FGRS	207 - 68
BZX85C33	♦ALGG	208 -112
CDIL	CEN	
♦FGRS	♦ITTG	
	♦THEF	
BZX85C33V	FGRS	208 -161
BZX85C36	♦ALGG	209 -177
CDIL	CEN	
♦ITTG	THEF	
BZX85C39	♦ALGG	211 - 13
CDIL	CEN	
♦ITTG	THEF	
BZX85C43	♦ALGG	212 - 24
CDIL	CEN	
♦ITTG	THEF	
BZX85C47	♦ALGG	213 - 75
CDIL	CEN	
♦ITTG	THEF	
BZX85C51	♦ALGG	214 - 70
CDIL	CEN	
♦ITTG	THEF	
BZX85C56	♦ALGG	215 - 61
CDIL	CEN	
♦ITTG	THEF	
BZX85C62	♦ALGG	216 - 65
CDIL	CEN	
♦ITTG	THEF	
BZX85C68	♦ALGG	217 - 46
CDIL	THEF	
BZX85C75	♦ALGG	218 - 29
CDIL	THEF	
BZX85C82	♦ALGG	219 - 8
CDIL	THEF	
BZX85C91	♦ALGG	219 -186
CDIL	THEF	
BZX85C100	♦ALGG	220 -148
CDIL	THEF	
BZX85C110	♦ALGG	221 -112
THEF		
BZX85C120	♦ALGG	222 - 64
THEF		
BZX85C130	♦ALGG	223 - 19
THEF		
BZX85C150	♦ALGG	224 - 51
THEF		
BZX85C160	♦ALGG	224 -179
THEF		
BZX85C180	♦ALGG	226 - 7
THEF		
BZX85C200	♦ALGG	227 - 3
THEF		
BZX87C5V1	♦APX	171 -196
♦MULB	♦PHIN	
RTCF	♦VALG	
BZX87C5V6	♦APX	173 - 84
♦MULB	♦PHIN	
RTCF	♦VALG	
BZX87C6V2	♦APX	175 -147
♦MULB	♦PHIN	
RTCF	♦VALG	
BZX87C6V8	♦APX	178 -148
♦MULB	♦PHIN	
RTCF	♦VALG	
BZX87C7V5	♦APX	180 -140
♦MULB	♦PHIN	
RTCF	♦VALG	
BZX87C8V2	♦APX	182 -129
♦MULB	♦PHIN	
RTCF	♦VALG	
BZX87C9V1	♦APX	185 -161
♦MULB	♦PHIN	
RTCF	♦VALG	
BZX87C10	♦APX	188 - 21
♦MULB	♦PHIN	
RTCF	♦VALG	
BZX87C11	♦APX	189 -137
♦MULB	♦PHIN	
RTCF	♦VALG	
BZX87C12	♦APX	191 -112

cont.next page

1. TYPE No. CROSS INDEX

IN TYPE NUMBER SEQUENCE

TYPE No.	MFRS	Pg&Line
BZX87C12		
(cont.)	♦MULB	
♦PHIN	RTCF	
	♦VALG	
BZX87C13	♦APX	193 - 56
♦MULB	♦PHIN	
RTCF	♦VALG	
BZX87C15	♦APX	195 -109
♦MULB	♦PHIN	
RTCF	♦VALG	
BZX87C16	♦APX	196 -200
♦MULB	♦PHIN	
RTCF	♦VALG	
BZX87C18	♦APX	199 - 8
♦MULB	♦PHIN	
RTCF	♦VALG	
BZX87C20	♦APX	200 -207
♦MULB	♦PHIN	
RTCF	♦VALG	
BZX87C22	♦APX	202 -109
♦MULB	♦PHIN	
RTCF	♦VALG	
BZX87C24	♦APX	203 -204
♦MULB	♦PHIN	
RTCF	♦VALG	
BZX87C27	♦APX	205 -145
♦MULB	♦PHIN	
RTCF	♦VALG	
BZX87C30	♦APX	207 - 69
♦MULB	♦PHIN	
RTCF	♦VALG	
BZX87C33	♦APX	208 -162
♦MULB	♦PHIN	
RTCF	♦VALG	
BZX87C36	♦APX	210 - 13
♦MULB	♦PHIN	
RTCF	♦VALG	
BZX87C39	♦APX	211 - 52
♦MULB	♦PHIN	
RTCF	♦VALG	
BZX87C43	♦APX	212 - 59
♦MULB	♦PHIN	
RTCF	♦VALG	
BZX87C47	♦APX	213 - 76
♦MULB	♦PHIN	
RTCF	♦VALG	
BZX87C51	♦APX	214 - 71
♦MULB	♦PHIN	
RTCF	♦VALG	
BZX87C56	♦APX	215 - 62
♦MULB	♦PHIN	
RTCF	♦VALG	
BZX87C62	♦APX	216 - 66
♦MULB	♦PHIN	
RTCF	♦VALG	
BZX87C68	♦APX	217 - 47
♦MULB	♦PHIN	
RTCF	♦VALG	
BZX87C75	♦APX	218 - 30
♦MULB	♦PHIN	
RTCF	♦VALG	
BZX88C2V7	♦FERB	164 -139
BZX88C3V0	♦FERB	165 - 63
BZX88C3V3	♦FERB	165 -195
	♦PHIN	
BZX88C3V6	♦FERB	166 -165
	♦PHIN	
BZX88C3V9	♦FERB	167 -131
	♦PHIN	
BZX88C4V3	♦FERB	168 -138
	♦PHIN	
BZX88C4V7	♦FERB	169 -173
	♦PHIN	
BZX88C5V1	♦FERB	171 - 50
	♦PHIN	
BZX88C5V6	♦FERB	172 -131
	♦PHIN	
BZX88C6V2	♦FERB	174 -133
	♦PHIN	
BZX88C6V8	♦FERB	177 -168
BZX88C7V5	♦FERB	179 -162
BZX88C8V2	♦FERB	181 -143
BZX88C9V1	♦FERB	184 -190
BZX88C10	♦FERB	187 - 14
BZX88C11	♦FERB	188 -179
BZX88C12	♦FERB	190 -137
BZX88C13	♦FERB	192 -114
BZX88C15	♦FERB	194 -138
BZX88C16	♦FERB	196 - 43
BZX88C18	♦FERB	198 - 46
BZX88C20	♦FERB	200 - 48
BZX88C22	♦FERB	201 -151
BZX88C24	♦FERB	203 - 56
BZX88C27	♦FERB	204 -199
BZX88C30	♦FERB	206 -125
BZX88C33	♦FERB	208 - 11
BZX88C36	♦FERB	209 - 99
BZX88C39	♦FERB	210 -138
BZX88C43	♦FERB	211 -159
BZX88C47	♦FERB	212 -171
BZX90	♦APX	177 - 12
♦MULB	♦PHIN	
♦RTCF	♦VALG	
BZX91	♦APX	177 - 13
♦MULB	♦PHIN	
♦RTCF	♦VALG	
BZX92	♦APX	177 - 14
♦MULB	♦PHIN	
♦RTCF	♦VALG	
BZX93	♦APX	177 - 15
♦MULB	♦PHIN	
♦RTCF	♦VALG	
BZX94	♦APX	177 - 16
cont.next col.		

TYPE No.	MFRS	Pg&Line
BZX94		
(cont.)	♦MULB	
♦PHIN	♦RTCF	
	VALG	
BZX96C2V7	CEN	164 -145
BZX96C3	CEN	165 - 73
BZX96C3V3	CEN	166 - 4
BZX96C3V9	CEN	167 -147
BZX96C4V3	CEN	168 -163
BZX96C4V7	CEN	169 -203
BZX96C5V1	CEN	171 - 78
BZX96C5V6	CEN	172 -166
BZX96C6V2	CEN	174 -185
BZX96C6V8	CEN	177 -205
BZX96C7V5	CEN	179 -191
BZX96C8V2	CEN	181 -170
BZX96C9V1	CEN	185 - 3
BZX96C10	CEN	187 - 45
BZX96C11	CEN	188 -198
BZX96C12	CEN	190 -160
BZX96C13	CEN	192 -132
BZX96C15	CEN	194 -156
BZX96C16	CEN	196 - 60
BZX96C18	CEN	198 - 66
BZX96C20	CEN	200 - 65
BZX96C22	CEN	201 -171
BZX96C24	CEN	203 - 72
BZX96C27	CEN	205 - 5
BZX96C30	CEN	206 -139
BZX96C33	CEN	208 - 27
BZX97C0V8	MSC	163 - 44
	♦SIEG	
BZX97C2V4	MSC	164 - 52
	♦SIEG	
BZX97C2V7	MSC	164 -175
	♦SIEG	
BZX97C3V0	MSC	165 -116
	♦SIEG	
BZX97C3V3	MSC	166 - 48
	♦SIEG	
BZX97C3V6	MSC	167 - 15
	♦SIEG	
BZX97C3V9	MSC	167 -179
	♦SIEG	
BZX97C4V3	MSC	169 - 5
	♦SIEG	
BZX97C4V7	MSC	170 - 48
	♦SIEG	
BZX97C5V1	MSC	171 -130
	♦SIEG	
BZX97C5V6	MSC	173 - 8
	♦SIEG	
BZX97C6V2	MSC	175 - 73
	♦SIEG	
BZX97C6V8	MSC	178 - 42
	♦SIEG	
BZX97C7V5	MSC	180 - 41
	♦SIEG	
BZX97C8V2	MSC	182 - 19
	♦SIEG	
BZX97C9V1	MSC	185 - 58
	♦SIEG	
BZX97C10	MSC	187 -101
	♦SIEG	
BZX97C11	MSC	189 - 26
	♦SIEG	
BZX97C12	MSC	190 -197
	♦SIEG	
BZX97C13	MSC	192 -163
	♦SIEG	
BZX97C15	MSC	194 -199
	♦SIEG	
BZX97C16	MSC	196 - 92
	♦SIEG	
BZX97C18	MSC	198 -113
	♦SIEG	
BZX97C20	MSC	200 -110
	♦SIEG	
BZX97C22	MSC	201 -201
	♦SIEG	
BZX97C24	MSC	203 - 98
	♦SIEG	
BZX97C27	MSC	205 - 43
	♦SIEG	
BZX97C30	MSC	206 -180
	♦SIEG	
BZX97C33	MSC	208 - 67
	♦SIEG	
BZX97C36	MSC	209 -132
	♦SIEG	
BZX97C39	MSC	210 -168
	♦SIEG	
BZX97C43	MSC	211 -194
	♦SIEG	
BZX97C47	MSC	213 - 3
	♦SIEG	
BZX98C3V9	MSC	377 -109
	♦SIEG	
BZX98C4V3	MSC	377 -147
	♦SIEG	
BZX98C4V7	MSC	378 - 30
	♦SIEG	
BZX98C5V1	MSC	378 - 73
	♦SIEG	
BZX98C5V6	MSC	378 -120
	♦SIEG	
BZX98C6V2	MSC	378 -173
	♦SIEG	
BZX98C6V8	MSC	379 - 72
	♦SIEG	
BZX98C7V5	MSC	379 -202
	♦SIEG	
BZX98C8V2	MSC	380 -112
	♦SIEG	

TYPE No.	MFRS	Pg&Line
BZX98C9V1	MSC	381 - 34
	♦SIEG	
BZX98C10	MSC	381 -144
	♦SIEG	
BZX98C11	MSC	382 - 31
	♦SIEG	
BZX98C12	MSC	382 -154
	♦SIEG	
BZX98C13	MSC	383 - 61
	♦SIEG	
BZX98C15	MSC	384 - 39
	♦SIEG	
BZX98C16	MSC	384 -136
	♦SIEG	
BZX98C18	MSC	385 -102
	♦SIEG	
BZX98C20	MSC	386 - 49
	♦SIEG	
BZX98C22	MSC	386 -156
	♦SIEG	
BZX98C24	MSC	387 - 71
	♦SIEG	
BZX98C27	MSC	388 - 13
	♦SIEG	
BZX98C30	MSC	388 -129
	♦SIEG	
BZX98C33	MSC	389 - 38
	♦SIEG	
BZX98C36	MSC	389 -147
	♦SIEG	
BZX98C39	MSC	390 - 38
	♦SIEG	
BZX98C43	MSC	390 -145
	♦SIEG	
BZX98C47	MSC	391 - 80
	♦SIEG	
BZX98C51	MSC	392 - 11
	♦SIEG	
BZX98C56	MSC	392 -138
	♦SIEG	
BZX98C62	MSC	393 - 50
	♦SIEG	
BZX98C68	MSC	393 -144
	♦SIEG	
BZX98C75	MSC	394 - 66
	♦SIEG	
BZX98C82	MSC	394 -170
	♦SIEG	
BZX98C91	MSC	395 - 79
	♦SIEG	
BZX98C100	MSC	395 -189
	♦SIEG	
BZX98C110	MSC	396 -106
	♦SIEG	
BZX98C120	MSC	396 -193
	♦SIEG	
BZX98C130	MSC	397 - 82
	♦SIEG	
BZX98C150	MSC	398 - 25
	♦SIEG	
BZX98C160	MSC	398 -102
	♦SIEG	
BZX98C180	MSC	399 - 28
	♦SIEG	
BZX98C200	MSC	399 -124
	♦SIEG	
BZY83C4V7	♦SIEG	169 -164
BZY83C5V1	♦SIEG	171 - 41
BZY83C5V6	♦SIEG	172 -116
BZY83C6V2	APD	174 -118
	♦SIEG	
BZY83C6V8	♦APD	177 -155
	♦SIEG	
BZY83C7V5	♦APD	179 -148
	♦SIEG	
BZY83C8V2	♦APD	181 -131
	♦SIEG	
BZY83C9V1	♦APD	184 -163
	♦SIEG	
BZY83C10	♦APD	186 -207
	♦SIEG	
BZY83C11	♦APD	188 -168
	♦SIEG	
BZY83C12	♦APD	190 -118
	♦SIEG	
BZY83C13V5	♦APD	193 -140
BZY83C15	♦APD	194 -126
	♦SIEG	
BZY83C16V5	♦APD	197 - 71
BZY83C18	♦APD	198 - 35
	♦SIEG	
BZY83C20	♦APD	200 - 40
	♦SIEG	
BZY83C22	♦APD	201 -139
	♦SIEG	
BZY83C24V5	♦APD	204 - 77
BZY83D1	♦SIEG	163 - 28
BZY83D4V7	♦SIEG	169 -170
BZY83D5V6	♦SIEG	172 - 99
BZY83D6V8	♦SIEG	177 -164
BZY83D8V2	♦SIEG	181 -139
BZY83D10	♦APD	187 - 6
	♦SIEG	
BZY83D12	♦SIEG	190 -130
BZY83D15	♦SIEG	194 -131
BZY83D18	♦SIEG	198 - 41
BZY83D22	♦SIEG	201 -144
BZY85C6V8	♦APD	177 -156
BZY85C7V5	♦APD	179 -149
BZY85C9V1	♦APD	184 -164
BZY85C10	♦APD	186 -208
BZY85C11	♦APD	188 -169
BZY85C12	♦APD	190 -119
BZY85C13V5	♦APD	192 -106

TYPE No.	MFRS	Pg&Line
BZY85C16V5	♦APD	196 - 36
BZY85C18	♦APD	198 - 36
BZY85C20	♦APD	200 - 41
BZY85C22	♦APD	201 -140
BZY85C24V5	♦APD	203 - 50
BZY85D8V2	APD	181 -193
BZY88C2V7	♦MSC	164 -158
	NECE	
BZY88C3V0	♦MSC	165 - 74
	NECE	
BZY88C3V3	♦MSC	165 - 6
♦MULB	NECE	
♦RTCF	SLCB	
	♦VALG	
BZY88C3V6	♦MSC	165 - 75
♦MULB	NECE	
♦RTCF	SLCB	
	♦VALG	
BZY88C3V9	♦MSC	166 - 5
♦MULB	NECE	
♦RTCF	SLCB	
	♦VALG	
BZY88C4V3	♦MSC	166 -182
♦MULB	NECE	
♦RTCF	SLCB	
	♦VALG	
BZY88C4V7	♦MSC	168 -103
♦MULB	NECE	
♦RTCF	SLCB	
	♦VALG	
BZY88C5V1	♦FGRS	169 -131
♦MSC	♦MULB	
NECE	♦RTCF	
SLCB	♦VALG	
BZY88C5V6	♦FGRS	172 - 49
♦MSC	♦MULB	
NECE	♦RTCF	
SLCB	♦VALG	
BZY88C6V2	♦FGRS	173 -180
♦MSC	♦MULB	
NECE	♦RTCF	
SLCB	♦VALG	
BZY88C6V8	♦APD	177 -115
♦FGRS	♦MSC	
♦MULB	NECE	
♦PHIN	♦RTCF	
SLCB	♦VALG	
BZY88C7V5	♦APD	179 -117
♦FGRS	♦MSC	
♦MULB	NECE	
♦PHIN	♦RTCF	
SLCB	♦VALG	
BZY88C8V2	♦APD	181 - 91
♦FGRS	♦MSC	
♦MULB	NECE	
♦PHIN	♦RTCF	
SLCB	♦VALG	
BZY88C9V1	♦APD	184 - 29
♦FGRS	♦MSC	
♦MULB	NECE	
♦PHIN	♦RTCF	
SLCB	♦VALG	
BZY88C10	♦APD	186 -159
♦FGRS	♦MSC	
♦MULB	NECE	
♦PHIN	♦RTCF	
SLCB	♦VALG	
BZY88C10V	♦FGRS	187 - 85
BZY88C11	♦APD	188 -145
♦FGRS	♦MSC	
♦MULB	NECE	
♦PHIN	♦RTCF	
SLCB	♦VALG	
BZY88C11V	♦FGRS	189 - 27
BZY88C12	♦APD	190 - 86
♦FGRS	♦MSC	
♦MULB	NECE	
♦PHIN	♦RTCF	
SLCB	♦VALG	
BZY88C12V	♦FGRS	190 -198
BZY88C13	♦APD	192 - 81
♦FGRS	♦MSC	
♦MULB	NECE	
♦PHIN	♦RTCF	
SLCB	♦VALG	
BZY88C13V	FGRS	192 -164
BZY88C15	♦APD	194 - 98
♦FGRS	♦MSC	
♦MULB	NECE	
♦PHIN	♦RTCF	
SLCB	♦VALG	
BZY88C15V	FGRS	194 -184
BZY88C16	♦APD	196 - 14
♦FGRS	♦MSC	
♦MULB	NECE	
♦PHIN	♦RTCF	
SLCB	♦VALG	
BZY88C16V	FGRS	196 - 93
BZY88C18	♦APD	197 -185
♦FGRS	♦MSC	
♦MULB	NECE	
♦PHIN	♦RTCF	
SLCB	♦VALG	
BZY88C18V	FGRS	198 - 97
BZY88C20	♦APD	200 - 15
♦FGRS	♦MSC	
♦MULB	NECE	
♦PHIN	♦RTCF	
SLCB	♦VALG	
BZY88C20V	FGRS	200 - 97
BZY88C22	♦APD	201 -112
♦FGRS	♦MSC	
♦MULB	NECE	
cont.next col.		

TYPE No.	MFRS	Pg&Line
BZY88C22		
(cont.)	♦PHIN	
♦RTCF	SLCB	
	♦VALG	
BZY88C22V	FGRS	201 -202
BZY88C24	♦APD	203 - 29
♦FGRS	♦MSC	
♦MULB	NECE	
♦PHIN	♦RTCF	
SLCB	♦VALG	
BZY88C24V	FGRS	203 - 99
BZY88C27	♦FGRS	204 -157
♦MSC	♦MULB	
NECE	♦PHIN	
♦RTCF	SLCB	
	♦VALG	
BZY88C27V	FGRS	205 - 32
BZY88C30	♦FGRS	206 - 94
♦MSC	♦MULB	
NECE	♦PHIN	
♦RTCF	SLCB	
	♦VALG	
BZY88C30V	FGRS	206 -168
BZY88C33	♦FGRS	208 - 28
♦MSC	♦MULB	
NECE	♦PHIN	
♦RTCF	♦VALG	
BZY88C33V	FGRS	208 - 56
BZY91C7V5	♦MULB	380 - 22
♦PHIN	♦RTCF	
SLCB	♦VALG	
BZY91C8V2	♦MULB	380 -133
♦PHIN	♦RTCF	
SLCB	♦VALG	
BZY91C9V1	♦MULB	380 -164
♦PHIN	♦RTCF	
SLCB	♦VALG	
BZY91C10	♦MULB	381 -164
♦PHIN	♦RTCF	
SLCB	♦VALG	
BZY91C11	♦MULB	382 - 52
♦PHIN	♦RTCF	
SLCB	♦VALG	
BZY91C12	♦MULB	382 -175
♦PHIN	♦RTCF	
SLCB	♦VALG	
BZY91C13	♦MULB	383 - 82
♦PHIN	♦RTCF	
SLCB	♦VALG	
BZY91C15	♦MULB	384 - 61
♦PHIN	♦RTCF	
SLCB	♦VALG	
BZY91C16	♦MULB	384 -158
♦PHIN	♦RTCF	
SLCB	♦VALG	
BZY91C18	♦MULB	385 -123
♦PHIN	♦RTCF	
SLCB	♦VALG	
BZY91C20	♦MULB	386 - 70
♦PHIN	♦RTCF	
SLCB	♦VALG	
BZY91C22	♦MULB	386 -177
♦PHIN	♦RTCF	
SLCB	♦VALG	
BZY91C24	♦MULB	387 - 90
♦PHIN	♦RTCF	
SLCB	♦VALG	
BZY91C27	♦MULB	388 - 32
♦PHIN	♦RTCF	
SLCB	♦VALG	
BZY91C30	♦MULB	388 -148
♦PHIN	♦RTCF	
SLCB	♦VALG	
BZY91C33	♦MULB	389 - 57
♦PHIN	♦RTCF	
SLCB	♦VALG	
BZY91C36	♦MULB	389 -166
♦PHIN	♦RTCF	
SLCB	♦VALG	
BZY91C39	♦MULB	390 - 57
♦PHIN	♦RTCF	
SLCB	♦VALG	
BZY91C43	♦MULB	390 -163
♦PHIN	♦RTCF	
SLCB	♦VALG	
BZY91C47	♦MULB	391 - 99
♦PHIN	♦RTCF	
SLCB	♦VALG	
BZY91C51	♦MULB	392 - 29
♦PHIN	♦RTCF	
SLCB	♦VALG	
BZY91C56	♦MULB	392 -156
♦PHIN	♦RTCF	
SLCB	♦VALG	
BZY91C62	♦MULB	393 - 69
♦PHIN	♦RTCF	
SLCB	♦VALG	
BZY91C68	♦MULB	393 -163
♦PHIN	♦RTCF	
SLCB	♦VALG	
BZY91C75	♦MULB	394 - 85
♦PHIN	♦RTCF	
SLCB	♦VALG	
BZY93C6V8	♦SLCB	379 - 73
BZY93C7V5	♦MULB	379 -203
♦PHIN	♦RTCF	
SLCB	♦VALG	
BZY93C8V2	♦MULB	380 -113
♦PHIN	♦RTCF	
SLCB	♦VALG	
BZY93C9V1	♦MULB	381 - 35
♦PHIN	♦RTCF	
SLCB	♦VALG	

Δ-Registered with JEDEC by this manufacturer

♦-Mfr's data sheet available in microfilm service

1. TYPE No. CROSS INDEX

IN TYPE NUMBER SEQUENCE

TYPE No.	MFRS	Pg&Line
BZY93C10	♦MULB	381 -145
♦PHIN	♦RTCF	
SLCB	♦VALG	
BZY93C11	♦MULB	382 - 32
♦PHIN	♦RTCF	
SLCB	♦VALG	
BZY93C12	♦MULB	382 -155
♦PHIN	♦RTCF	
SLCB	♦VALG	
BZY93C13	♦MULB	383 - 62
♦PHIN	♦RTCF	
SLCB	♦VALG	
BZY93C15	♦MULB	384 - 40
♦PHIN	♦RTCF	
SLCB	♦VALG	
BZY93C16	♦MULB	384 -137
♦PHIN	♦RTCF	
SLCB	♦VALG	
BZY93C18	♦MULB	385 -103
♦PHIN	♦RTCF	
SLCB	♦VALG	
BZY93C20	♦MULB	386 - 50
♦PHIN	♦RTCF	
SLCB	♦VALG	
BZY93C22	♦MULB	386 -157
♦PHIN	♦RTCF	
SLCB	♦VALG	
BZY93C24	♦MULB	387 - 72
♦PHIN	♦RTCF	
SLCB	♦VALG	
BZY93C27	♦MULB	388 - 14
♦PHIN	♦RTCF	
SLCB	♦VALG	
BZY93C30	♦MULB	388 -130
♦PHIN	♦RTCF	
SLCB	♦VALG	
BZY93C33	♦MULB	389 - 39
♦PHIN	♦RTCF	
SLCB	♦VALG	
BZY93C36	♦MULB	389 -148
♦PHIN	♦RTCF	
SLCB	♦VALG	
BZY93C39	♦MULB	390 - 39
♦PHIN	♦RTCF	
SLCB	♦VALG	
BZY93C43	♦MULB	390 -146
♦PHIN	♦RTCF	
SLCB	♦VALG	
BZY93C47	♦MULB	391 - 81
♦PHIN	♦RTCF	
SLCB	♦VALG	
BZY93C51	♦MULB	392 - 12
♦PHIN	♦RTCF	
SLCB	♦VALG	
BZY93C56	♦MULB	392 -139
♦PHIN	♦RTCF	
SLCB	♦VALG	
BZY93C62	♦MULB	393 - 51
♦PHIN	♦RTCF	
SLCB	♦VALG	
BZY93C68	♦MULB	393 -145
♦PHIN	♦RTCF	
SLCB	♦VALG	
BZY93C75	♦MULB	394 - 67
♦PHIN	♦RTCF	
SLCB	♦VALG	
BZY95C10	♦MULB	188 - 36
♦PHIN	♦RTCF	
	♦VALG	
BZY95C11	♦MULB	189 -150
♦PHIN	♦RTCF	
	♦VALG	
BZY95C12	♦MULB	191 -125
♦PHIN	♦RTCF	
	♦VALG	
BZY95C13	♦MULB	193 - 67
♦PHIN	♦RTCF	
	♦VALG	
BZY95C15	♦MULB	195 -122
♦PHIN	♦RTCF	
	♦VALG	
BZY95C16	♦MULB	197 - 5
♦PHIN	♦RTCF	
	♦VALG	
BZY95C18	♦MULB	199 - 21
♦PHIN	♦RTCF	
	♦VALG	
BZY95C20	♦MULB	201 - 14
♦PHIN	♦RTCF	
	♦VALG	
BZY95C22	♦MULB	202 -121
♦PHIN	♦RTCF	
	♦VALG	
BZY95C24	♦MULB	204 - 7
♦PHIN	♦RTCF	
	♦VALG	
BZY95C27	♦MULB	205 -161
♦PHIN	♦RTCF	
	♦VALG	
BZY95C30	♦MULB	207 - 85
♦PHIN	♦RTCF	
	♦VALG	
BZY95C33	♦MULB	208 -178
♦PHIN	♦RTCF	
	♦VALG	
BZY95C36	♦MULB	210 - 27
♦PHIN	♦RTCF	
	♦VALG	
BZY95C39	♦MULB	211 - 64
♦PHIN	♦RTCF	
	♦VALG	
BZY95C43	♦MULB	212 - 75
♦PHIN	♦RTCF	
	♦VALG	

TYPE No.	MFRS	Pg&Line
BZY95C47	♦MULB	213 - 92
♦PHIN	♦RTCF	
	♦VALG	
BZY95C51	♦MULB	214 - 86
♦PHIN	♦RTCF	
	♦VALG	
BZY95C56	♦MULB	215 - 75
♦PHIN	♦RTCF	
	♦VALG	
BZY95C62	♦MULB	216 - 79
♦PHIN	♦RTCF	
	♦VALG	
BZY95C68	♦MULB	217 - 60
♦PHIN	♦RTCF	
	♦VALG	
BZY95C75	♦MULB	218 - 43
♦PHIN	RTCF	
	♦VALG	
BZY96C4V7	♦MULB	170 -125
♦PHIN	♦RTCF	
	♦VALG	
BZY96C5V1	♦MULB	171 -207
♦PHIN	♦RTCF	
	♦VALG	
BZY96C5V6	♦MULB	173 - 95
♦PHIN	♦RTCF	
	♦VALG	
BZY96C6V2	♦MULB	175 -159
♦PHIN	♦RTCF	
	♦VALG	
BZY96C6V8	♦MULB	178 -162
♦PHIN	♦RTCF	
	♦VALG	
BZY96C7V5	♦MULB	180 -154
♦PHIN	♦RTCF	
	♦VALG	
BZY96C8V2	♦MULB	182 -143
♦PHIN	♦RTCF	
	♦VALG	
BZY96C9V1	♦MULB	185 -175
♦PHIN	♦RTCF	
	♦VALG	
BZY96C10	♦MULB	188 - 37
♦PHIN	♦RTCF	
	♦VALG	
BZY97C3V3	MSC	166 - 90
♦SIEG	THEF	
BZY97C3V6	MSC	167 - 58
♦SIEG	THEF	
BZY97C3V9	MSC	168 - 41
♦SIEG	THEF	
BZY97C4V3	MSC	169 - 59
♦SIEG	THEF	
BZY97C4V7	MSC	170 -115
♦SIEG	THEF	
BZY97C5V1	MSC	171 -197
♦SIEG	THEF	
BZY97C5V6	MSC	173 - 85
♦SIEG	THEF	
BZY97C6V2	MSC	175 -148
♦SIEG	THEF	
BZY97C6V8	MSC	178 -149
♦SIEG	THEF	
BZY97C7V5	♦FGRS	180 -141
MSC	♦SIEG	
	THEF	
BZY97C8V2	♦FGRS	182 -130
MSC	♦SIEG	
	THEF	
BZY97C9V1	♦FGRS	185 -162
MSC	♦SIEG	
	THEF	
BZY97C10	♦FGRS	188 - 22
MSC	♦SIEG	
	THEF	
BZY97C10V	FGRS	188 - 38
BZY97C11	♦FGRS	189 -138
MSC	♦SIEG	
	THEF	
BZY97C11V	FGRS	189 -151
BZY97C12	♦FGRS	191 -113
MSC	♦SIEG	
	THEF	
BZY97C12V	FGRS	191 -126
BZY97C13	♦FGRS	193 - 57
MSC	♦SIEG	
	THEF	
BZY97C13V	FGRS	193 - 68
BZY97C15	♦FGRS	195 -110
MSC	♦SIEG	
	THEF	
BZY97C15V	FGRS	195 -123
BZY97C16	♦FGRS	196 -201
MSC	♦SIEG	
	THEF	
BZY97C16V	FGRS	197 - 6
BZY97C18	♦FGRS	199 - 9
MSC	♦SIEG	
	THEF	
BZY97C18V	FGRS	199 - 22
BZY97C20	♦FGRS	200 -208
MSC	♦SIEG	
	THEF	
BZY97C20V	FGRS	201 - 15
BZY97C22	♦FGRS	202 -110
MSC	♦SIEG	
	THEF	
BZY97C22V	FGRS	202 -122
BZY97C24	♦FGRS	203 -205
MSC	♦SIEG	
	THEF	
BZY97C24V	FGRS	204 - 8
BZY97C27	♦FGRS	205 -146
cont.next col.		

TYPE No.	MFRS	Pg&Line
BZY97C27		
(cont.)	MSC	
♦SIEG	THEF	
BZY97C27V	FGRS	205 -162
BZY97C30	♦FGRS	207 - 70
MSC	♦SIEG	
	THEF	
BZY97C30V	FGRS	207 - 86
BZY97C33	♦FGRS	208 -163
MSC	♦SIEG	
	THEF	
BZY97C33V	FGRS	208 -179
BZY97C36	♦FGRS	210 - 14
MSC	♦SIEG	
	THEF	
BZY97C36V	FGRS	210 - 28
BZY97C39	♦FGRS	211 - 53
MSC	♦SIEG	
	THEF	
BZY97C39V	FGRS	211 - 65
BZY97C43	♦FGRS	212 - 60
MSC	♦SIEG	
	THEF	
BZY97C43V	FGRS	212 - 76
BZY97C47	♦FGRS	213 - 77
MSC	♦SIEG	
	THEF	
BZY97C47V	FGRS	213 - 93
BZY97C51	♦FGRS	214 - 72
MSC	♦SIEG	
	THEF	
BZY97C51V	FGRS	214 - 87
BZY97C56	♦FGRS	215 - 63
MSC	♦SIEG	
	THEF	
BZY97C56V	FGRS	215 - 76
BZY97C62	♦FGRS	216 - 67
MSC	♦SIEG	
	THEF	
BZY97C62V	FGRS	216 - 80
BZY97C68	♦FGRS	217 - 48
MSC	♦SIEG	
	THEF	
BZY97C68V	FGRS	217 - 61
BZY97C75	♦FGRS	218 - 31
MSC	♦SIEG	
	THEF	
BZY97C75V	FGRS	218 - 44
BZY97C82	♦FGRS	219 - 9
MSC	♦SIEG	
	THEF	
BZY97C82V	FGRS	219 - 20
BZY97C91	♦FGRS	219 -187
MSC	♦SIEG	
	THEF	
BZY97C91V	FGRS	219 -198
BZY97C100	♦FGRS	220 -149
MSC	♦SIEG	
	THEF	
BZY97C100V	FGRS	228 - 28
BZY97C110	♦FGRS	221 -113
MSC	♦SIEG	
	THEF	
BZY97C110V	FGRS	228 - 33
BZY97C120	♦FGRS	222 - 65
MSC	♦SIEG	
	THEF	
BZY97C120V	FGRS	228 - 38
BZY97C130	♦FGRS	223 - 20
MSC	♦SIEG	
	THEF	
BZY97C130V	FGRS	228 - 41
BZY97C150	♦FGRS	224 - 52
MSC	♦SIEG	
	THEF	
BZY97C150V	FGRS	228 - 46
BZY97C160	♦FGRS	224 -180
MSC	♦SIEG	
	THEF	
BZY97C160V	FGRS	228 - 47
BZY97C180	♦FGRS	226 - 8
MSC	♦SIEG	
	THEF	
BZY97C180V	FGRS	228 - 48
BZY97C200	♦FGRS	227 - 4
MSC	♦SIEG	
	THEF	
BZY97C200V	FGRS	228 - 49
C2C3.0	SLCB	228 - 55
C2C3.3	SLCB	228 - 57
C2C3.6	SLCB	228 - 62
C2C3.9	SLCB	228 - 65
C2C4.3	SLCB	228 - 70
C2C4.7	SLCB	228 - 73
C2C5.1	SLCB	228 - 80
C2C5.6	SLCB	228 - 82
C2C6.2	SLCB	228 - 92
C2C6.8	SLCB	228 - 96
C2C7.5	SLCB	228 -103
C2C8.2	SLCB	228 -112
C2C9.1	SLCB	228 -120
C2C10	SLCB	228 -128
C2C11	SLCB	228 -134
C2C12	SLCB	228 -139
C2C13	SLCB	228 -145
C2C15	SLCB	228 -151
C2C16	SLCB	228 -157
C2C18	SLCB	228 -163
C2C20	SLCB	228 -171
C2C22	SLCB	228 -176
C2C24	SLCB	228 -183
C2C27	SLCB	229 - 6
C2C30	SLCB	229 - 17
C2C33	SLCB	229 - 24

TYPE No.	MFRS	Pg&Line
C2C36	SLCB	229 - 34
C2C39	SLCB	229 - 40
C2C43	SLCB	229 - 50
C2C47	SLCB	229 - 58
C2C51	SLCB	229 - 65
C2C56	SLCB	229 - 70
C2C62	SLCB	229 - 81
C2C68	SLCB	229 - 87
C2C75	SLCB	229 - 93
C2C82	SLCB	229 -100
C2C91	SLCB	229 -107
C2C100	SLCB	229 -116
C2C110	SLCB	229 -124
C2C120	SLCB	229 -133
C2C130	SLCB	229 -140
C2C150	SLCB	229 -154
C2C160	SLCB	230 - 1
C2C180	SLCB	230 - 4
C2C200	SLCB	230 - 7
C2C400	SLCB	230 - 10
C3C3.0	SLCB	377 - 37
C3C3.3	SLCB	377 - 57
C3C3.6	SLCB	377 - 79
C3C3.9	SLCB	377 -106
C3C4.3	SLCB	377 -144
C3C4.7	SLCB	378 - 27
C3C5.1	SLCB	378 - 70
C3C5.6	SLCB	378 -116
C3C6.2	SLCB	378 -169
C3C6.8	SLCB	379 - 61
C3C7.5	SLCB	379 -193
C3C8.2	SLCB	380 -101
C3C9.1	SLCB	381 - 21
C3C10	SLCB	381 -131
C3C11	SLCB	382 - 20
C3C12	SLCB	382 -141
C3C13	SLCB	383 - 48
C3C15	SLCB	384 - 26
C3C16	SLCB	384 -123
C3C18	SLCB	385 - 89
C3C20	SLCB	386 - 36
C3C22	SLCB	386 -143
C3C24	SLCB	387 - 58
C3C27	SLCB	387 -203
C3C30	SLCB	388 -116
C3C33	SLCB	389 - 25
C3C36	SLCB	389 -134
C3C39	SLCB	390 - 27
C3C43	SLCB	390 -134
C3C47	SLCB	391 - 69
C3C51	SLCB	391 -203
C3C56	SLCB	392 -126
C3C62	SLCB	393 - 39
C3C68	SLCB	393 -133
C3C75	SLCB	394 - 53
C3C82	SLCB	394 -160
C3C91	SLCB	395 - 68
C3C100	SLCB	395 -177
C3C110	SLCB	396 - 95
C3C120	SLCB	396 -182
C3C130	SLCB	397 - 71
C3C150	SLCB	398 - 14
C3C160	SLCB	398 - 91
C3C180	SLCB	399 - 17
C3C200	SLCB	399 -113
C4C3.0	SLCB	228 - 54
C4C3.3	SLCB	228 - 56
C4C3.6	SLCB	228 - 61
C4C3.9	SLCB	228 - 64
C4C4.3	SLCB	228 - 69
C4C4.7	SLCB	228 - 72
C4C5.1	SLCB	228 - 79
C4C5.6	SLCB	228 - 81
C4C6.2	SLCB	228 - 91
C4C6.8	SLCB	228 - 95
C4C7.5	SLCB	228 -101
C4C8.2	SLCB	228 -110
C4C9.1	SLCB	228 -118
C4C10	SLCB	228 -126
C4C11	SLCB	228 -133
C4C12	SLCB	228 -137
C4C13	SLCB	228 -144
C4C15	SLCB	228 -149
C4C16	SLCB	228 -156
C4C18	SLCB	228 -161
C4C20	SLCB	228 -169
C4C22	SLCB	228 -175
C4C24	SLCB	228 -181
C4C27	SLCB	229 - 4
C4C30	SLCB	229 - 15
C4C33	SLCB	229 - 22
C4C36	SLCB	229 - 32
C4C39	SLCB	229 - 39
C4C43	SLCB	229 - 49
C4C47	SLCB	229 - 57
C4C51	SLCB	229 - 64
C4C56	SLCB	229 - 69
C4C62	SLCB	229 - 80
C4C68	SLCB	229 - 86
C4C75	SLCB	229 - 92
C4C82	SLCB	229 - 99
C4C91	SLCB	229 -106
C4C100	SLCB	229 -115
C4C110	SLCB	229 -123
C4C120	SLCB	229 -132
C4C130	SLCB	229 -139
C4C150	SLCB	229 -153
C4C160	SLCB	229 -156
C4C180	SLCB	230 - 3
C4C200	SLCB	230 - 6
C4P03Q	INRJ	375 -134
C4P04Q	INRJ	375 -135
C4P05Q	INRJ	375 -136
C4P06Q	INRJ	375 -137

TYPE No.	MFRS	Pg&Line
C5D459CA	♦UNI	234 -204
C5D459CC	♦UNI	234 -205
C5D485	♦UNI	235 -164
C5D485CC	♦UNI	235 -165
C5D914	♦UNI	247 - 18
C5D914CA	♦UNI	247 - 19
C5D914CC	♦UNI	247 - 20
C5D5226	♦UNI	165 -196
C5D5227	♦UNI	166 -166
C5D5228	♦UNI	167 -132
C5D5229	♦UNI	168 -139
C5D5230	♦UNI	169 -172
C5D5231	♦UNI	171 - 49
C5D5233	♦UNI	173 -200
C5D5234	♦UNI	174 -132
C5D5236	♦UNI	179 -161
C5D5237	♦UNI	181 -142
C5D5238	♦UNI	183 -151
C5D5239	♦UNI	184 -189
C5D5240	♦UNI	187 - 13
C5D5241	♦UNI	188 -177
C5D5244	♦UNI	193 -169
C5D5247	♦UNI	197 -101
C5D5248	♦UNI	198 - 45
C5D5250	♦UNI	200 - 47
C5D5251	♦UNI	201 -150
C5D5252	♦UNI	203 - 55
C5D5254	♦UNI	204 -198
C5D5255	♦UNI	206 - 28
C5D5256	♦UNI	206 -124
C5D5257	♦UNI	208 - 10
C6C3.6	SLCB	377 - 90
C6C3.9	SLCB	377 -128
C6C4.3	SLCB	378 - 4
C6C4.7	SLCB	378 - 49
C6C5.1	SLCB	378 - 92
C6C5.6	SLCB	378 -139
C6C6.2	SLCB	378 -193
C6C6.8	SLCB	379 -100
C6C7.5	SLCB	380 - 24
C6C8.2	SLCB	380 -135
C6C9.1	SLCB	381 - 57
C6C10	SLCB	381 -166
C6C11	SLCB	382 - 54
C6C12	SLCB	382 -177
C6C13	SLCB	383 - 84
C6C15	SLCB	384 - 63
C6C16	SLCB	384 -160
C6C18	SLCB	385 -125
C6C20	SLCB	386 - 72
C6C22	SLCB	386 -179
C6C24	SLCB	387 - 92
C6C27	SLCB	388 - 34
C6C30	SLCB	388 -150
C6C33	SLCB	389 - 59
C6C36	SLCB	389 -168
C6C39	SLCB	390 - 59
C6C43	SLCB	390 -165
C6C47	SLCB	391 -101
C6C51	SLCB	392 - 31
C6C56	SLCB	392 -158
C6C62	SLCB	393 - 71
C6C68	SLCB	393 -165
C6C75	SLCB	394 - 87
C6C82	SLCB	394 -189
C6C91	SLCB	395 - 98
C6C100	SLCB	396 - 10
C6C110	SLCB	396 -125
C6C120	SLCB	397 - 15
C6C130	SLCB	397 -101
C6C150	SLCB	398 - 44
C6C160	SLCB	398 -121
C6C180	SLCB	399 - 47
C6C200	SLCB	399 -142
C7C3.0	SLCB	377 - 42
C7C3.3	SLCB	377 - 63
C7C3.6	SLCB	377 - 85
C7C3.9	SLCB	377 -114
C7C4.3	SLCB	377 -152
C7C4.7	SLCB	378 - 35
C7C5.1	SLCB	378 - 78
C7C5.6	SLCB	378 -125
C7C6.2	SLCB	378 -178
C7C6.8	SLCB	379 - 78
C7C7.5	SLCB	380 - 3
C7C8.2	SLCB	380 -118
C7C9.1	SLCB	381 - 40
C7C10	SLCB	381 -149
C7C11	SLCB	382 - 37
C7C12	SLCB	382 -160
C7C13	SLCB	383 - 67
C7C15	SLCB	384 - 46
C7C16	SLCB	384 -142
C7C18	SLCB	385 -108
C7C20	SLCB	386 - 55
C7C22	SLCB	386 -162
C7C24	SLCB	228 -184
C7C27	SLCB	229 - 7
C7C30	SLCB	229 - 18
C7C33	SLCB	229 - 25
C7C36	SLCB	229 - 35
C7C39	SLCB	229 - 41
C7C43	SLCB	229 - 51
C7C47	SLCB	229 - 59
C7C51	SLCB	229 - 66
C7C56	SLCB	229 - 71
C7C62	SLCB	229 - 82
C7C68	SLCB	229 - 88
C7C75	SLCB	229 - 94
C7C82	SLCB	229 -101
C7C91	SLCB	229 -108
C7C100	SLCB	229 -117
C7C110	SLCB	229 -125
C7C120	SLCB	229 -134

△-Registered with JEDEC by this manufacturer

♦-Mfr's data sheet available in microfilm service

1. TYPE No. CROSS INDEX

IN TYPE NUMBER SEQUENCE

TYPE No.	MFRS	Pg&Line
C7C130	SLCB	229 -141
C7C150	SLCB	229 -155
C7C160	SLCB	230 - 2
C7C180	SLCB	230 - 5
C7C200	SLCB	230 - 8
C7C400	SLCB	230 - 11
C8P03Q	INRJ	375 -140
C8P04Q	INRJ	375 -142
C8P05Q	INRJ	375 -144
C8P06Q	INRJ	375 -146
C10P03Q	INRJ	375 -148
C10P04Q	INRJ	375 -149
C10P05Q	INRJ	375 -150
C10P06Q	INRJ	375 -151
C10P10F(R)	INRJ	262 - 46
C10P10Q	INRJ	375 -152
C10P20F(R)	INRJ	262 - 56
C11CA	♦HITJ	415 -187
C11CF	♦HITJ	418 - 15
C11CJ	♦HITJ	418 -197
C11DA	♦HITJ	419 -217
C16P03Q	INRJ	375 -155
C16P04Q	INRJ	375 -156
C16P05Q	INRJ	375 -158
C16P06Q	INRJ	375 -159
C16P10F(R)	INRJ	262 - 82
C16P20F(R)	INRJ	262 - 85
C25P03Q	INRJ	375 -160
C25P04Q	INRJ	375 -161
C25P05Q	INRJ	375 -163
C25P06Q	INRJ	375 -165
C25P10Q	INRJ	375 -167
C30H03Q	INRJ	375 -171
C30H04Q	INRJ	375 -178
C60H03Q	INRJ	375 -186
C60H04Q	INRJ	375 -188
C80H03Q	INRJ	375 -194
C80H04Q	INRJ	375 -195
C120H03Q	INRJ	375 -205
C120H04Q	INRJ	375 -208
C1406B40C3700-2200		
	SIEG	364 -188
C1406M	BBCG	364 - 60
C1412B80C3700-2200		
	SIEG	365 - 1
C1412M	BBCG	364 - 65
C2120B125C3000-1800		
	SIEG	364 - 83
C2120M	BBCG	364 - 16
C2140B250C3000-1800		
	SIEG	364 - 84
C2140M	BBCG	364 - 17
C2180B500C3000-1800		
	SIEG	364 - 85
C2180M	BBCG	364 - 19
C2206B40C3700-2200		
	SIEG	364 -189
C2206N	BBCG	364 - 61
C2212B80C3700-2200		
	SIEG	372 - 64
C2212N	BBCG	364 - 66
C2220B125C3700-2200		
	SIEG	372 - 65
C2220N	BBCG	364 - 72
C2340N	BBCG	364 - 18
C2506B40C1600-1100		
	SIEG	362 -128
C2512B80C1600-1100		
	SIEG	362 -129
C2520B125C1500-1000		
	SIEG	361 -126
C2540B250C1500-1000		
	SIEG	361 -127
C3141	♦CODI	231 -190
C3142	♦CODI	231 -191
C3143	♦CODI	231 -192
C3144	♦CODI	231 -193
C6041	♦CODI	163 - 30
C6041M	♦CODI	163 - 25
C6042	♦CODI	163 - 74
C6042M	♦CODI	163 - 70
C6043	♦CODI	163 -157
C6043M	♦CODI	163 -153
C6044	♦CODI	165 - 11
C6044M	♦CODI	165 - 8
C6045	♦CODI	163 - 13
C6045M	♦CODI	163 - 12
C6046	♦CODI	163 - 64
C6046M	♦CODI	163 - 63
C6047	♦CODI	163 -120
C6047M	♦CODI	163 -119
C6048	♦CODI	164 - 79
C6048M	♦CODI	164 - 78
C6049	♦CODI	163 - 31
C6049M	♦CODI	163 - 26
C6050	♦CODI	163 - 75
C6050M	♦CODI	163 - 71
C6051	♦CODI	163 -158
C6051M	♦CODI	163 -154
C6052	♦CODI	165 - 12
C6052M	♦CODI	165 - 9
C8000	♦CODI	177 - 17
C8000A	♦CODI	177 - 18
C8000B	♦CODI	177 - 19
C8000C	♦CODI	177 - 20
C8000D	♦CODI	177 - 21
C8001	♦CODI	177 - 22
C8001A	♦CODI	177 - 23
C8001B	♦CODI	177 - 24
C8001C	♦CODI	177 - 25
C8001D	♦CODI	177 - 26
C8002	♦CODI	177 - 27
C8002A	♦CODI	177 - 28
C8002B	♦CODI	177 - 29

TYPE No.	MFRS	Pg&Line
C8002C	♦CODI	177 - 30
C8002D	♦CODI	177 - 31
CAX15	♦UNI	429 - 14
CAX20	♦UNI	430 -106
CAX25	♦UNI	431 - 84
CAX30	♦UNI	432 - 27
CD1	♦CDIL	438 - 47
CD2	♦CDIL	438 - 48
CD2A	♦CDIL	438 - 49
CD5	♦CDIL	274 - 66
CD12	♦CDIL	274 -108
CD21	♦CDIL	274 - 67
CD22	♦CDIL	274 - 73
CD23	♦CDIL	274 - 78
CD24	♦CDIL	274 - 82
CD26	♦CDIL	274 -109
CD27	♦CDIL	274 -113
CD28	♦CDI	165 - 22
CD29	♦CDIL	274 -132
CD31	♦CDI	165 -152
CD32	♦CDIL	274 - 74
CD33	♦CDIL	274 - 79
CD34	♦CDIL	274 - 83
CD35	♦CDI	166 -133
CD36	♦CDIL	274 -110
CD37	♦CDIL	274 -114
CD38	♦CDIL	274 -124
CD39	♦CDI	167 -180
CD43	♦CDI	168 -204
CD47	♦CDI	170 - 37
CD51	♦CDI	171 -118
CD56	♦CDI	172 -206
CD0057	CDI	231 -161
CD61	♦CDIL	248 - 86
CD62#B	♦CDI	175 - 58
CD62#C	♦CDIL	248 - 87
CD63	♦CDIL	244 -165
CD68	♦CDI	178 - 27
CD75	♦CDI	180 - 26
CD82	♦CDI	182 - 5
CD91	♦CDI	185 - 40
CD100	♦CDI	188 - 98
CD610	♦CDI	174 - 53
CD746A	CDI	166 - 6
CD747A	CDI	166 -183
CD748A	CDI	167 -148
CD749A	CDI	168 -164
CD750A	CDI	169 -204
CD751A	CDI	171 - 79
CD752A	CDI	172 -167
CD753A	CDI	174 -186
CD754A	CDI	177 -206
CD755A	CDI	179 -192
CD756A	CDI	181 -171
CD758A	CDI	187 - 46
CD759A	CDI	190 -161
CD821	♦CDI	174 -187
CD821A	♦CDI	174 -188
CD823	♦CDI	174 -189
CD823A	♦CDI	174 -190
CD825	♦CDI	174 -191
CD825A	♦CDI	174 -192
CD826	♦CDI	177 - 32
CD827	♦CDI	174 -193
CD827A	♦CDI	174 -194
CD828	♦CDI	177 - 82
CD829	♦CDI	174 -195
CD829A	♦CDI	174 -196
CD914	CDI	246 -167
CD935	♦CDI	184 - 30
CD935A	♦CDI	184 - 31
CD936	♦CDI	184 - 32
CD936A	♦CDI	184 - 33
CD937	♦CDI	184 - 34
CD937A	♦CDI	184 - 35
CD962B	CDI	188 -199
CD963B	CDI	190 -162
CD964B	CDI	192 -133
CD965B	CDI	194 -157
CD966B	CDI	196 - 61
CD967B	CDI	198 - 67
CD968B	CDI	200 - 66
CD969B	CDI	201 -172
CD970B	CDI	203 - 73
CD971B	CDI	205 - 6
CD972B	CDI	206 -140
CD973B	CDI	208 - 29
CD974B	CDI	209 -110
CD975B	CDI	210 -147
CD976B	CDI	211 -167
CD977B	CDI	212 -179
CD978B	CDI	213 -190
CD979B	CDI	214 -175
CD980B	CDI	215 -185
CD981B	CDI	216 -158
CD982B	CDI	217 -148
CD983B	CDI	218 -130
CD984B	CDI	219 -116
CD985B	CDI	220 - 73
CD986B	CDI	221 - 43
CD987B	CDI	221 -185
CD988B	CDI	222 -138
CD989B	CDI	223 -164
CD990B	CDI	224 -116
CD991B	CDI	225 -120
CD992B	CDI	226 -125
CD3154	CDI	183 - 51
CD3155	CDI	183 - 52
CD3156	CDI	183 - 53
CD4099	♦CDI	177 -207
CD4100	♦CDI	179 -193
CD4101	♦CDI	181 -172
CD4102	♦CDI	183 -155
CD4103	♦CDI	185 - 4

TYPE No.	MFRS	Pg&Line
CD4104	♦CDI	187 - 47
CD4105	♦CDI	188 -200
CD4106	♦CDI	190 -163
CD4107	♦CDI	192 -134
CD4108	♦CDI	193 -176
CD4109	♦CDI	194 -158
CD4110	♦CDI	196 - 62
CD4111	♦CDI	183 - 32
CD4112	♦CDI	183 - 33
CD4113	♦CDI	183 - 34
CD4114	♦CDI	183 - 35
CD4115	♦CDI	183 - 36
CD4116	♦CDI	190 -120
CD4117	♦CDI	190 -121
CD4118	♦CDI	190 -122
CD4119	♦CDI	206 - 32
CD4120	♦CDI	206 -141
CD4121	♦CDI	190 -123
CD4122	♦CDI	190 -124
CD4123	♦CDI	210 -148
CD4124	♦CDI	211 -168
CD4125	♦CDI	212 -180
CD4126	♦CDI	213 -191
CD4127	♦CDI	214 -176
CD4128	♦CDI	215 -140
CD4129	♦CDI	215 -186
CD4130	♦CDI	216 -159
CD4131	♦CDI	217 -149
CD4132	♦CDI	218 -131
CD4133	♦CDI	219 - 74
CD4134	♦CDI	219 -117
CD4135	♦CDI	220 - 74
CD4148	CDI	246 -168
CD4370A	CDI	164 - 30
CD4371A	CDI	164 -146
CD4372A	CDI	165 - 76
CD4565	♦CDI	176 -151
CD4565A	♦CDI	176 -152
CD4566	♦CDI	176 -153
CD4566A	♦CDI	176 -154
CD4567	♦CDI	176 -155
CD4567A	♦CDI	176 -156
CD4568	♦CDI	176 -157
CD4568A	♦CDI	176 -158
CD4569	♦CDI	176 -159
CD4569A	♦CDI	176 -160
CD4570	♦CDI	176 -161
CD4570A	♦CDI	176 -162
CD4571	♦CDI	176 -163
CD4571A	♦CDI	176 -164
CD4572	♦CDI	176 -165
CD4572A	♦CDI	176 -166
CD4573	♦CDI	176 -167
CD4573A	♦CDI	176 -168
CD4574	♦CDI	176 -169
CD4574A	♦CDI	176 -170
CD4575	♦CDI	176 -171
CD4575A	♦CDI	176 -172
CD4576	♦CDI	176 -173
CD4576A	♦CDI	176 -174
CD4577	♦CDI	176 -175
CD4577A	♦CDI	176 -176
CD4578	♦CDI	176 -177
CD4578A	♦CDI	176 -178
CD4579	♦CDI	176 -179
CD4579A	♦CDI	176 -180
CD4580	♦CDI	176 -181
CD4580A	♦CDI	176 -182
CD4581	♦CDI	176 -183
CD4581A	♦CDI	176 -184
CD4582	♦CDI	176 -185
CD4582A	♦CDI	176 -186
CD4583	♦CDI	176 -187
CD4583A	♦CDI	176 -188
CD4584	♦CDI	176 -189
CD4584A	♦CDI	176 -190
CD4614	♦CDI	163 -104
CD4615	♦CDI	163 -131
CD4616	♦CDI	163 -176
CD4617	♦CDI	164 - 31
CD4618	♦CDI	164 -147
CD4619	♦CDI	165 - 77
CD4620	♦CDI	166 - 7
CD4621	♦CDI	166 -184
CD4622	♦CDI	167 -149
CD4623	♦CDI	168 -165
CD4624	♦CDI	169 -205
CD4625	♦CDI	171 - 80
CD4626	♦CDI	172 -168
CD4627	♦CDI	174 -197
CD4728	CDI	166 - 75
CD4728A	♦CDI	165 -179
CD4729	CDI	167 - 41
CD4729A	♦CDI	156 -151
CD4730	CDI	168 - 21
CD4730A	♦CDI	167 -111
CD4731	CDI	169 - 43
CD4731A	♦CDI	168 -122
CD4732	CDI	170 - 96
CD4732A	♦CDI	169 -146
CD4733	CDI	171 -177
CD4733A	♦CDI	171 - 26
CD4734	CDI	173 - 62
CD4734A	♦CDI	172 - 92
CD4735	CDI	175 -125
CD4735A	♦CDI	174 - 55
CD4736	CDI	178 -107
CD4736A	♦CDI	177 -131
CD4737	CDI	180 -101
CD4737A	♦CDI	179 -129
CD4738	CDI	182 - 84
CD4738A	♦CDI	181 -102
CD4739	CDI	185 -116
CD4739A	♦CDI	184 -122

TYPE No.	MFRS	Pg&Line
CD4740	CDI	187 -175
CD4740A	♦CDI	186 -174
CD4741	CDI	189 - 89
CD4741A	♦CDI	188 -151
CD4742	CDI	191 - 57
CD4742A	♦CDI	190 - 94
CD4743	CDI	193 - 8
CD4743A	♦CDI	192 - 90
CD4744	CDI	195 - 57
CD4744A	♦CDI	194 -104
CD4745	CDI	196 -150
CD4745A	♦CDI	196 - 20
CD4746	CDI	198 -166
CD4746A	♦CDI	198 - 12
CD4747	CDI	200 -158
CD4747A	♦CDI	200 - 25
CD4748	CDI	202 - 58
CD4748A	♦CDI	201 -117
CD4749	CDI	203 -156
CD4749A	♦CDI	203 - 37
CD4750	CDI	205 - 94
CD4750A	♦CDI	204 -169
CD4751	CDI	207 - 20
CD4751A	♦CDI	206 -108
CD4752	CDI	208 -113
CD4752A	♦CDI	207 -189
CD4753	CDI	209 -178
CD4753A	♦CDI	209 - 83
CD4754	CDI	211 - 14
CD4754A	♦CDI	210 -119
CD4755	CDI	212 - 25
CD4755A	♦CDI	211 -147
CD4756	CDI	213 - 40
CD4756A	♦CDI	212 -153
CD4757	CDI	214 - 37
CD4757A	♦CDI	213 -176
CD4758	CDI	215 - 23
CD4758A	♦CDI	214 -151
CD4759	CDI	216 - 29
CD4759A	♦CDI	215 -165
CD4760	CDI	217 - 10
CD4760A	♦CDI	216 -138
CD4761	CDI	217 -192
CD4761A	♦CDI	217 -135
CD4762	CDI	218 -171
CD4762A	♦CDI	218 -115
CD4763	CDI	219 -153
CD4763A	♦CDI	219 -107
CD4764	CDI	220 -112
CD4764A	♦CDI	220 - 56
CD4765	♦CDI	184 -165
CD4765A	♦CDI	184 -166
CD4766	♦CDI	184 -167
CD4766A	♦CDI	184 -168
CD4767	♦CDI	184 -169
CD4767A	♦CDI	184 -170
CD4768	♦CDI	184 -171
CD4768A	♦CDI	184 -123
CD4770	♦CDI	184 -172
CD4770A	♦CDI	184 -173
CD4771	♦CDI	184 -174
CD4771A	♦CDI	184 -175
CD4772	♦CDI	184 -176
CD4772A	♦CDI	184 -177
CD4773	♦CDI	184 -178
CD4773A	♦CDI	184 -179
CD5221B	♦CDI	164 - 32
CD5222B	♦CDI	164 - 93
CD5223B	♦CDI	164 -148
CD5224B	♦CDI	165 - 15
CD5225B	♦CDI	165 - 78
CD5226B	♦CDI	166 - 8
CD5227B	♦CDI	166 -185
CD5228B	♦CDI	167 -150
CD5229B	♦CDI	168 -166
CD5230B	♦CDI	169 -206
CD5231B	♦CDI	171 - 81
CD5232B	♦CDI	172 -169
CD5233B	♦CDI	173 -203
CD5234B	♦CDI	174 -198
CD5235B	♦CDI	174 -199
CD5236B	♦CDI	179 -194
CD5237B	♦CDI	181 -173
CD5238B	♦CDI	183 -156
CD5239B	♦CDI	185 - 5
CD5240B	♦CDI	187 - 48
CD5241B	♦CDI	188 -201
CD5242B	♦CDI	190 -164
CD5243B	♦CDI	192 -135
CD5244B	♦CDI	193 -177
CD5245B	♦CDI	194 -159
CD5246B	♦CDI	196 - 63
CD5247B	♦CDI	197 -105
CD5248B	♦CDI	198 - 68
CD5249B	♦CDI	199 -121
CD5250B	♦CDI	200 - 67
CD5251B	♦CDI	201 -173
CD5252B	♦CDI	203 - 74
CD5253B	♦CDI	204 -100
CD5254B	♦CDI	205 - 7
CD5255B	♦CDI	206 - 33
CD5256B	♦CDI	206 -142
CD5257B	♦CDI	208 - 30
CD5258B	♦CDI	209 -111
CD5259B	♦CDI	210 -149
CD5260B	♦CDI	211 -169
CD5261B	♦CDI	212 -181
CD5262B	♦CDI	213 -192
CD5263B	♦CDI	214 -177
CD5264B	♦CDI	215 -141
CD5265B	♦CDI	215 -187
CD5266B	♦CDI	216 -160
CD5267B	♦CDI	217 -150
CD5268B	♦CDI	218 -132

TYPE No.	MFRS	Pg&Line
CD5269B	♦CDI	219 - 75
CD5270B	♦CDI	219 -118
CD5271B	♦CDI	220 - 75
CD5272B	♦CDI	221 - 44
CD5273A	♦CDI	221 -173
CD5274A	♦CDI	222 -132
CD5275A	♦CDI	223 - 80
CD5276A	♦CDI	223 -153
CD5277B	♦CDI	224 -117
CD5278B	♦CDI	225 - 50
CD5279B	♦CDI	225 -121
CD5280B	♦CDI	226 - 71
CD5281B	♦CDI	226 -126
CD5333B	♦CDI	165 -180
CD5334B	♦CDI	166 -152
CD5335B	♦CDI	167 -112
CD5336B	♦CDI	168 -123
CD5337B	♦CDI	169 -147
CD5338B	♦CDI	171 - 27
CD5339B	♦CDI	172 - 93
CD5340B	♦CDI	173 -195
CD5341B	♦CDI	174 - 56
CD5342B	♦CDI	177 -132
CD5343B	♦CDI	179 -130
CD5344B	♦CDI	181 -103
CD5345B	♦CDI	183 -125
CD5346B	♦CDI	184 -124
CD5347B	♦CDI	186 -175
CD5348B	♦CDI	188 -152
CD5349B	♦CDI	190 - 95
CD5350B	♦CDI	192 - 91
CD5351B	♦CDI	193 -161
CD5352B	♦CDI	194 -105
CD5353B	♦CDI	196 - 21
CD5354B	♦CDI	197 - 93
CD5355B	♦CDI	198 - 13
CD5356B	♦CDI	199 -107
CD5357B	♦CDI	200 - 26
CD5358B	♦CDI	201 -118
CD5359B	♦CDI	203 - 38
CD5360B	♦CDI	204 - 90
CD5361B	♦CDI	204 -170
CD5362B	♦CDI	206 - 23
CD5363B	♦CDI	206 -109
CD5364B	♦CDI	207 -190
CD5365B	♦CDI	209 - 84
CD5366B	♦CDI	210 -120
CD5367B	♦CDI	211 -148
CD5368B	♦CDI	212 -154
CD5369B	♦CDI	213 -177
CD5370B	♦CDI	214 -152
CD5371B	♦CDI	215 -137
CD5372B	♦CDI	215 -166
CD5373B	♦CDI	221 -186
CD5374B	♦CDI	222 -139
CD5375B	♦CDI	223 - 82
CD5376B	♦CDI	223 -165
CD5377B	♦CDI	219 -108
CD5378B	♦CDI	220 - 57
CD5379B	♦CDI	221 - 36
CD5380B	♦CDI	221 -174
CD5381B	♦CDI	222 -133
CD5382B	♦CDI	223 - 81
CD5383B	♦CDI	223 -154
CD5384B	♦CDI	224 -110
CD5385B	♦CDI	225 - 49
CD5386B	♦CDI	225 -108
CD5387B	♦CDI	226 - 70
CD5388B	♦CDI	226 -119
CD13333	MSC	235 - 76
CD13334	MSC	235 - 1
CD13336	MSC	235 - 77
CD13338	MSC	235 - 78
CD13339	MSC	235 - 79
CER67	♦SOD	277 -219
CER67A	♦SOD	274 -193
CER67B	♦SOD	275 -159
CER67C	♦SOD	276 -141
CER67F	♦SOD	277 -214
CER68	♦SOD	278 - 31
CER68A	♦SOD	274 -200
CER68B	♦SOD	275 -164
CER68C	♦SOD	276 -161
CER69	♦SOD	278 - 79
CER69A	♦SOD	274 -207
CER69B	♦SOD	275 -170
CER69C	♦SOD	276 -185
CER70	♦SOD	278 -159
CER70A	♦SOD	274 -219
CER70B	♦SOD	275 -180
CER70C	♦SOD	277 - 5
CER71	♦SOD	279 - 13
CER71A	♦SOD	275 - 11
CER71B	♦SOD	275 -190
CER71C	♦SOD	277 - 45
CER71F	♦SOD	279 - 1
CER72	♦SOD	279 - 52
CER72A	♦SOD	274 -105
CER72B	♦SOD	275 - 19
CER72C	♦SOD	275 -196
CER72D	♦SOD	277 - 67
CER73	♦SOD	401 -128
CER73A	♦SOD	401 - 24
CER73B	♦SOD	401 - 40
CER73C	♦SOD	401 - 66
CER73D	♦SOD	401 - 95
CER500	♦SOD	278 -188
CER500A	♦SOD	275 - 3
CER500B	♦SOD	275 -183
CER500C	♦SOD	277 - 29
CER500F	♦SOD	278 -183
CER1200F	♦SOD	406 - 25
CF10	CODI	427 - 72
CF15	CODI	429 - 55

Δ-Registered with JEDEC by this manufacturer

♦-Mfr's data sheet available in microfilm service

1. TYPE No. CROSS INDEX

IN TYPE NUMBER SEQUENCE

TYPE No.	MFRS	Pg&Line
CF20	CODI	430 -147
CF25	CODI	431 -114
CF30	CODI	432 - 53
CF35	CODI	432 -123
CF40	CODI	432 -174
CF45	CODI	433 - 6
CF50	CODI	433 - 52
CFR10	CODI	427 - 66
CFR15	CODI	429 - 51
CFR20	CODI	430 -144
CFR25	CODI	431 -112
CFR30	CODI	432 - 51
CFR35	CODI	432 -122
CFR40	CODI	432 -172
CFR45	CODI	433 - 4
CFR50	CODI	433 - 50
CG1	♦GIC	256 -101
CG2	GIC	256 -102
CG3	GIC	272 -189
CG-1/DG-1	♦GIC	445 - 32
CG-2/DG-2	GIC	445 - 33
CG-3/DG-3	GIC	445 - 34
CH746	♦MSC	166 - 9
	♦SIEG	
CH747	♦MSC	166 -186
	♦SIEG	
CH748	♦MSC	167 -151
	♦SIEG	
CH749	♦MSC	168 -167
	♦SIEG	
CH750	♦MSC	169 -207
	♦SIEG	
CH751	♦MSC	171 - 82
	♦SIEG	
CH752	♦MSC	172 -170
	♦SIEG	
CH753	♦MSC	174 -200
	♦SIEG	
CH754	♦MSC	177 -208
	♦SIEG	
CH755	♦MSC	179 -195
	♦SIEG	
CH756	♦MSC	181 -174
	♦SIEG	
CH757	♦MSC	185 - 6
	♦SIEG	
CH758	♦MSC	187 - 49
	♦SIEG	
CH759	♦MSC	190 -165
	♦SIEG	
CH821	♦MSC	174 - 57
	♦SIEG	
CH823	♦MSC	174 - 58
	♦SIEG	
CH825	♦MSC	174 - 59
	♦SIEG	
CH827	♦MSC	174 - 60
	♦SIEG	
CH829	♦MSC	174 - 61
	♦SIEG	
CH962	♦MSC	188 -202
	♦SIEG	
CH963	♦MSC	190 -166
	♦SIEG	
CH964	♦MSC	192 -136
	♦SIEG	
CH965	♦MSC	194 -160
	♦SIEG	
CH966	♦MSC	196 - 64
	♦SIEG	
CH967	♦MSC	198 - 69
	♦SIEG	
CH968	♦MSC	200 - 68
	♦SIEG	
CH969	♦MSC	201 -174
	♦SIEG	
CH970	♦MSC	203 - 75
	♦SIEG	
CH971	♦MSC	205 - 8
	♦SIEG	
CH972	♦MSC	206 -143
	♦SIEG	
CH973	♦MSC	208 - 31
	♦SIEG	
CH974	♦MSC	209 -112
	♦SIEG	
CH975	♦MSC	210 -150
	♦SIEG	
CH976	♦MSC	211 -170
	♦SIEG	
CH977	♦MSC	212 -182
	♦SIEG	
CH978	♦MSC	213 -193
	♦SIEG	
CH979	♦MSC	214 -178
	♦SIEG	
CH980	♦MSC	215 -188
	♦SIEG	
CH981	♦MSC	216 -161
	♦SIEG	
CH982	♦MSC	217 -151
	♦SIEG	
CH983	♦MSC	218 -133
	♦SIEG	
CH984	♦MSC	219 -119
	♦SIEG	
CH985	♦MSC	220 - 76
	♦SIEG	
CH986	♦MSC	221 - 45
	♦SIEG	
CH987	♦MSC	221 -187
	♦SIEG	
CH988	♦MSC	222 -140
	♦SIEG	
CH989	♦MSC	223 -166
	♦SIEG	
CH990	♦MSC	224 -118
	♦SIEG	
CH991	♦MSC	225 -122
	♦SIEG	
CH992	♦MSC	226 -127
	♦SIEG	
CH4099	MSC	177 -209
	♦SIEG	
CH4100	MSC	179 -196
	♦SIEG	
CH4101	MSC	181 -175
	♦SIEG	
CH4102	MSC	183 -157
	♦SIEG	
CH4103	MSC	185 - 7
	♦SIEG	
CH4104	MSC	187 - 50
	♦SIEG	
CH4105	MSC	188 -203
	♦SIEG	
CH4106	MSC	190 -167
	♦SIEG	
CH4107	MSC	192 -137
	♦SIEG	
CH4108	MSC	193 -178
	♦SIEG	
CH4109	MSC	194 -161
	♦SIEG	
CH4110	MSC	196 - 65
	♦SIEG	
CH4111	MSC	197 -106
	♦SIEG	
CH4112	MSC	198 - 70
	♦SIEG	
CH4113	MSC	199 -122
	♦SIEG	
CH4114	MSC	200 - 69
	♦SIEG	
CH4115	MSC	201 -175
	♦SIEG	
CH4116	MSC	203 - 76
	♦SIEG	
CH4117	MSC	204 -101
	♦SIEG	
CH4118	MSC	205 - 9
	♦SIEG	
CH4119	MSC	206 - 34
	♦SIEG	
CH4120	MSC	206 -144
	♦SIEG	
CH4121	MSC	208 - 32
	♦SIEG	
CH4122	MSC	209 -113
	♦SIEG	
CH4123	MSC	210 -151
	♦SIEG	
CH4124	MSC	211 -171
	♦SIEG	
CH4125	MSC	212 -183
	♦SIEG	
CH4126	MSC	213 -194
	♦SIEG	
CH4127	MSC	214 -179
	♦SIEG	
CH4128	MSC	215 -142
	♦SIEG	
CH4129	MSC	215 -189
	♦SIEG	
CH4130	MSC	216 -162
	♦SIEG	
CH4131	MSC	217 -152
	♦SIEG	
CH4132	MSC	218 -134
	♦SIEG	
CH4133	MSC	219 - 76
	♦SIEG	
CH4134	MSC	219 -120
	♦SIEG	
CH4135	MSC	220 - 77
	♦SIEG	
CH4370	♦MSC	164 - 33
	♦SIEG	
CH4371	♦MSC	164 -149
	♦SIEG	
CH4372	♦MSC	165 - 79
	♦SIEG	
CH4565A	♦MSC	176 - 78
	♦SIEG	
CH4566A	♦MSC	176 - 79
	♦SIEG	
CH4567A	♦MSC	176 - 80
	♦SIEG	
CH4568A	♦MSC	176 - 81
	♦SIEG	
CH4569A	♦MSC	176 - 82
	♦SIEG	
CH4570A	♦MSC	176 - 83
	♦SIEG	
CH4571A	♦MSC	176 - 84
	♦SIEG	
CH4572A	♦MSC	176 - 85
	♦SIEG	
CH4573A	♦MSC	176 - 86
	♦SIEG	
CH4574A	♦MSC	176 - 87
	♦SIEG	
CH4575A	♦MSC	176 - 88
	♦SIEG	
CH4576A	♦MSC	176 - 89
	♦SIEG	
CH4577A	♦MSC	176 - 90
	♦SIEG	
CH4578A	♦MSC	176 - 91
	♦SIEG	
CH4579A	♦MSC	176 - 92
	♦SIEG	
CH4580A	♦MSC	176 - 93
	♦SIEG	
CH4581A	♦MSC	176 - 94
	♦SIEG	
CH4582A	♦MSC	176 - 95
	♦SIEG	
CH4583A	♦MSC	176 - 96
	♦SIEG	
CH4584A	♦MSC	176 - 97
	♦SIEG	
CH4614	♦MSC	163 -105
	♦SIEG	
CH4615	♦MSC	163 -132
	♦SIEG	
CH4616	♦MSC	163 -177
	♦SIEG	
CH4617	♦MSC	164 - 34
	♦SIEG	
CH4618	♦MSC	164 -150
	♦SIEG	
CH4619	♦MSC	165 - 80
	♦SIEG	
CH4620	♦MSC	166 - 10
	♦SIEG	
CH4621	♦MSC	166 -187
	♦SIEG	
CH4622	♦MSC	167 -152
	♦SIEG	
CH4623	♦MSC	168 -168
	♦SIEG	
CH4624	♦MSC	170 - 1
	♦SIEG	
CH4625	♦MSC	171 - 83
	♦SIEG	
CH4626	♦MSC	172 -171
	♦SIEG	
CH4627	♦MSC	174 -201
	♦SIEG	
CH4728	♦MSC	166 - 76
CH4729	♦MSC	167 - 42
	♦SIEG	
CH4730	♦MSC	168 - 22
	♦SIEG	
CH4731	♦MSC	169 - 44
	♦SIEG	
CH4732	♦MSC	170 - 97
	♦SIEG	
CH4733	♦MSC	171 -178
	♦SIEG	
CH4734	♦MSC	173 - 63
	♦SIEG	
CH4735	♦MSC	175 -126
	♦SIEG	
CH4736	♦MSC	178 -108
	♦SIEG	
CH4737	♦MSC	180 -102
	♦SIEG	
CH4738	♦MSC	182 - 85
	♦SIEG	
CH4739	♦MSC	185 -117
	♦SIEG	
CH4740	♦MSC	187 -176
	♦SIEG	
CH4741	♦MSC	189 - 90
	♦SIEG	
CH4742	♦MSC	191 - 58
	♦SIEG	
CH4743	♦MSC	193 - 9
	♦SIEG	
CH4744	♦MSC	195 - 58
	♦SIEG	
CH4745	♦MSC	196 -151
	♦SIEG	
CH4746	♦MSC	198 -167
	♦SIEG	
CH4747	♦MSC	200 -159
	♦SIEG	
CH4748	♦MSC	202 - 59
	♦SIEG	
CH4749	♦MSC	203 -157
	♦SIEG	
CH4750	♦MSC	205 - 95
	♦SIEG	
CH4751	♦MSC	207 - 21
	♦SIEG	
CH4752	♦MSC	208 -114
	♦SIEG	
CH4753	♦MSC	209 -179
	♦SIEG	
CH4754	♦MSC	211 - 15
	♦SIEG	
CH4755	♦MSC	212 - 26
	♦SIEG	
CH4756	♦MSC	213 - 41
	♦SIEG	
CH4757	♦MSC	214 - 38
	♦SIEG	
CH4758	♦MSC	215 - 24
	♦SIEG	
CH4759	♦MSC	216 - 30
	♦SIEG	
CH4760	♦MSC	217 - 11
	♦SIEG	
CH4761	♦MSC	217 -193
	♦SIEG	
CH4762	♦MSC	218 -172
	♦SIEG	
CH4763	♦MSC	219 -154
	♦SIEG	
CH4764	♦MSC	220 -113
	♦SIEG	
CH5221	♦MSC	164 - 35
	♦SIEG	
CH5222	♦MSC	164 - 94
	♦SIEG	
CH5223	♦MSC	164 -151
	♦SIEG	
CH5224	♦MSC	165 - 16
	♦SIEG	
CH5225	♦MSC	165 - 81
	♦SIEG	
CH5226	♦MSC	166 - 11
	♦SIEG	
CH5227	♦MSC	166 -188
	♦SIEG	
CH5228	♦MSC	167 -153
	♦SIEG	
CH5229	♦MSC	168 -169
	♦SIEG	
CH5230	♦MSC	170 - 2
	♦SIEG	
CH5231	♦MSC	171 - 84
	♦SIEG	
CH5232	♦MSC	172 -172
	♦SIEG	
CH5233	♦MSC	173 -204
	♦SIEG	
CH5234	♦MSC	174 -202
	♦SIEG	
CH5235	♦MSC	177 -210
	♦SIEG	
CH5236	♦MSC	179 -197
	♦SIEG	
CH5237	♦MSC	181 -176
	♦SIEG	
CH5238	♦MSC	183 -158
	♦SIEG	
CH5239	♦MSC	185 - 8
	♦SIEG	
CH5240	♦MSC	187 - 51
	♦SIEG	
CH5241	♦MSC	188 -204
	♦SIEG	
CH5242	♦MSC	190 -168
	♦SIEG	
CH5243	♦MSC	192 -138
	♦SIEG	
CH5244	♦MSC	193 -179
	♦SIEG	
CH5245	♦MSC	194 -162
	♦SIEG	
CH5246	♦MSC	196 - 66
	♦SIEG	
CH5247	♦MSC	197 -107
	♦SIEG	
CH5248	♦MSC	198 - 71
	♦SIEG	
CH5249	♦MSC	199 -123
	♦SIEG	
CH5250	♦MSC	200 - 70
	♦SIEG	
CH5251	♦MSC	201 -176
	♦SIEG	
CH5252	♦MSC	203 - 77
	♦SIEG	
CH5253	♦MSC	204 -102
	♦SIEG	
CH5254	♦MSC	205 - 10
	♦SIEG	
CH5255	♦MSC	206 - 35
	♦SIEG	
CH5256	♦MSC	206 -145
	♦SIEG	
CH5257	♦MSC	208 - 33
	♦SIEG	
CH5258	♦MSC	209 -114
	♦SIEG	
CH5259	♦MSC	210 -152
	♦SIEG	
CH5260	♦MSC	211 -172
	♦SIEG	
CH5261	♦MSC	212 -184
	♦SIEG	
CH5262	♦MSC	213 -195
	♦SIEG	
CH5263	♦MSC	214 -180
	♦SIEG	
CH5264	♦MSC	215 -143
	♦SIEG	
CH5265	♦MSC	215 -190
	♦SIEG	
CH5266	♦MSC	216 -163
	♦SIEG	
CH5267	♦MSC	217 -153
	♦SIEG	
CH5268	♦MSC	218 -135
	♦SIEG	
CH5269	♦MSC	219 - 77
	♦SIEG	
CH5270	♦MSC	219 -121
	♦SIEG	
CH5271	♦MSC	220 - 78
	♦SIEG	
CH5272	♦MSC	221 - 46
	♦SIEG	
CH5273	♦MSC	221 -188
	♦SIEG	
CH5274	♦MSC	222 -141
	♦SIEG	
CH5275	♦MSC	223 - 83
	♦SIEG	
CH5276	♦MSC	223 -167
	♦SIEG	
CH5277	♦MSC	224 -119
	♦SIEG	
CH5278	♦MSC	225 - 51
	♦SIEG	
CH5279	♦MSC	225 -123
	♦SIEG	
CH5280	♦MSC	226 - 72
	♦SIEG	
CH5281	♦MSC	226 -128
	♦SIEG	
CIL250	♦TCY	434 - 45
CIL251	♦TCY	434 - 46
CIL252	♦TCY	434 - 47
CIL253	♦TCY	434 - 48
CIL254	♦TCY	434 - 49
CIL255	♦TCY	434 - 50
CIL256	♦TCY	434 - 51
CIL257	♦TCY	434 - 52
CIL350	♦TCY	434 - 53
CIL351	♦TCY	434 - 54
CIL352	♦TCY	434 - 55
CIL353	♦TCY	434 - 56
CIL354	♦TCY	434 - 57
CIL355	♦TCY	434 - 58
CIL356	♦TCY	434 - 59
CIL357	♦TCY	434 - 60
CIL358	♦TCY	434 - 61
CIL359	♦TCY	434 - 62
CIL360	♦TCY	434 - 63
CIL361	♦TCY	434 - 64
CIL362	♦TCY	434 - 65
CIL363	♦TCY	434 - 66
CIL364	♦TCY	434 - 67
CIL365	♦TCY	434 - 68
CIL366	♦TCY	434 - 69
CIL500/022	♦TCY	434 - 70
CIL500/024	♦TCY	434 - 71
CIL500/027	♦TCY	434 - 72
CIL500/030	♦TCY	434 - 73
CIL500/033	♦TCY	434 - 74
CIL500/039	♦TCY	434 - 75
CIL500/043	♦TCY	434 - 76
CIL500/047	♦TCY	434 - 77
CIL500/056	♦TCY	434 - 78
CIL500/062	♦TCY	434 - 79
CIL500/068	♦TCY	434 - 80
CIL500/075	♦TCY	434 - 81
CIL500/082	♦TCY	434 - 82
CIL500/091	♦TCY	434 - 83
CIL500/100	♦TCY	434 - 84
CIL500/110	♦TCY	434 - 85
CIL500/120	♦TCY	434 - 86
CIL500/130	♦TCY	434 - 87
CIL500/140	♦TCY	434 - 88
CIL500/150	♦TCY	434 - 89
CIL500/160	♦TCY	434 - 90
CIL500/180	♦TCY	434 - 91
CIL500/200	♦TCY	434 - 92
CIL500/220	♦TCY	434 - 93
CIL500/240	♦TCY	434 - 94
CIL500/270	♦TCY	434 - 95
CIL500/300	♦TCY	434 - 96
CIL500/330	♦TCY	434 - 97
CIL500/360	♦TCY	434 - 98
CIL500/390	♦TCY	434 - 99
CIL500/430	♦TCY	434 -100
CIL500/470	♦TCY	434 -101
CIL500/510	♦TCY	434 -102
CIL500/560	♦TCY	434 -103
CIL500/620	♦TCY	434 -104
CIL500/680	♦TCY	434 -105
CIL1300	TCY	434 - 5
CIL1301	TCY	434 - 6
CIL1302	TCY	434 - 7
CIL1303	TCY	434 - 8
CIL1304	TCY	434 - 9
CIL1305	TCY	434 - 10
CL5#B	CODI	423 -118
CL10	CODI	427 - 73
CL15	CODI	429 - 56
CL20	CODI	430 -148
CL25	CODI	431 -115
CL30	CODI	432 - 54
CL35	CODI	432 -124
CL40	CODI	432 -175
CL45	CODI	433 - 7
CL50	CODI	433 - 53
CLR5	CODI	241 -213
CLR10	CODI	242 - 56
CLR15	CODI	242 - 98
CLR20	CODI	242 -122
CLR25	CODI	242 -132
CLR30	CODI	242 -140
CLR35	CODI	242 -142
CLR40	CODI	242 -149
CLR45	CODI	242 -152
CLR50	CODI	242 -157
CLVA43A	♦TRWS	168 -133
CLVA47A	♦TRWS	169 -165
CLVA51A	♦TRWS	171 - 42
CLVA56A	♦TRWS	172 -117
CLVA62A	♦TRWS	174 -119
CLVA68A	♦TRWS	177 -157
CLVA75A	♦TRWS	179 -150
CLVA82A	♦TRWS	181 -132
CLVA91A	♦TRWS	184 -180
CLVA100A	♦TRWS	186 -209
CM50	♦CDIL	438 - 50
CND1001A	CODI	435 - 97
CND1002A	CODI	435 - 98
CND2001A	CODI	435 - 99
CND2002A	CODI	435 -100
CND3001A	CODI	435 -101
CND3002A	CODI	435 -102

Δ-Registered with JEDEC by this manufacturer

♦-Mfr's data sheet available in microfilm service

1. TYPE No. CROSS INDEX

IN TYPE NUMBER SEQUENCE

TYPE No.	MFRS	Pg&Line
CND4001A	CODI	435 -103
CND6001A	CODI	435 -104
CND6002A	CODI	435 -105
CND6003A	CODI	435 -106
CND6004A	CODI	435 -107
CND6005A	CODI	435 -108
CND6006A	CODI	435 -109
CND6007A	CODI	435 -110
CND6008A	CODI	436 - 1
CND6009A	CODI	436 - 2
CND6010A	CODI	436 - 3
CND6011A	CODI	436 - 4
CND6012A	CODI	436 - 5
CNM5A	CODI	436 - 6
CNM5B	CODI	436 - 7
CNM5C	CODI	436 - 8
CNM5D	CODI	436 - 9
CNM5E	CODI	436 - 10
CNM5EN	CODI	436 - 11
CNM10A	CODI	436 - 12
CNM10B	CODI	436 - 13
CNM10C	CODI	436 - 14
CNM10D	CODI	436 - 15
CNM10E	CODI	436 - 16
CNM10EN	CODI	436 - 17
CNM20A	CODI	436 - 18
CNM20B	CODI	436 - 19
CNM20C	CODI	436 - 20
CNM20D	CODI	436 - 21
CNM20E	CODI	436 - 22
CNM20EN	CODI	436 - 23
CNM50A	CODI	436 - 24
CNM50B	CODI	436 - 25
CNM50C	CODI	436 - 26
CNM50D	CODI	436 - 27
CNM50E	CODI	436 - 28
CNM50EN	CODI	436 - 29
CNM100A	CODI	436 - 30
CNM100B	CODI	436 - 31
CNM100C	CODI	436 - 32
CNM100D	CODI	436 - 33
CNM100E	CODI	436 - 34
CNM100EN	CODI	436 - 35
CNM1000A	CODI	436 - 36
CODI531	♦CODI	278 - 12
CODI532	♦CODI	278 - 51
CODI533	♦CODI	278 - 98
CODI534	♦CODI	278 -132
CODI535	♦CODI	278 -173
CODI536	♦CODI	278 -203
CODI537	♦CODI	279 - 24
CODI538	♦CODI	279 - 38
CODI551	♦CODI	275 -162
CODI552	♦CODI	275 -167
CODI553	♦CODI	275 -173
CODI554	♦CODI	275 -176
CODI555	♦CODI	275 -181
CODI556	♦CODI	275 -186
CODI5314	♦CODI	361 -157
CODI5324	♦CODI	361 -184
CODI5334	♦CODI	362 - 13
CODI5344	♦CODI	362 - 19
CODI5354	♦CODI	362 - 49
CODI5364	♦CODI	362 - 55
CODI5514	CODI	360 - 34
CODI5524	CODI	360 - 35
CODI5534	CODI	360 - 36
CODI5544	CODI	360 - 37
CODI5554	CODI	360 - 38
CODI5564	CODI	360 - 39
CODI6041	♦CODI	163 - 7
CODI6042	♦CODI	163 - 49
CODI6043	♦CODI	163 - 76
CODI6044	♦CODI	163 -121
CODI6045	♦CODI	163 - 8
CODI6046	♦CODI	163 - 50
CODI6047	♦CODI	163 - 77
CODI6048	♦CODI	163 -122
CODI6049	♦CODI	163 - 9
CODI6050	♦CODI	163 - 51
CODI6051	♦CODI	163 - 78
CODI6052	♦CODI	163 -123
CP22	♦CDIL	276 - 52
CP100	EDI	277 - 11
CP101	EDI	277 - 12
CP102	EDI	277 - 54
CP103	EDI	401 - 42
CP104	EDI	405 -198
CP110	EDI	412 - 25
CP115	EDI	412 - 19
CP119	EDI	413 -200
CP121	EDI	418 -155
CP123	EDI	419 -113
CP124	EDI	419 - 86
CP126	EDI	422 -194
CP127	EDI	422 -208
CP128	EDI	424 - 11
CP129	EDI	423 -121
CP130	EDI	424 -173
CP131	EDI	425 - 87
CP132	EDI	426 - 41
CP133	EDI	426 - 42
CP134	EDI	427 -125
CP135	EDI	427 -164
CP136	EDI	427 -165
CP137	EDI	428 - 17
CP138	EDI	429 -130
CP139	EDI	429 -131
CP140	EDI	429 - 40
CP141	EDI	429 - 95
CP142	EDI	429 -147
CP143	EDI	429 - 96
CP144	EDI	429 -196
CP145	EDI	429 -203

TYPE No.	MFRS	Pg&Line
CP146	EDI	430 - 22
CP147	EDI	430 - 81
CP148	EDI	430 -132
CP149	EDI	430 -133
CP150	EDI	430 -134
CP151	EDI	431 -104
CP152	EDI	431 -105
CP153	EDI	431 -158
CP154	EDI	431 -139
CP155	EDI	432 - 64
CP156	EDI	432 - 44
CP157	EDI	432 - 80
CP158	EDI	432 -171
CP2009	♦LUCB	341 - 65
CP2009A	♦LUCB	341 - 66
CP2010	♦LUCB	341 - 67
CP2010A	♦LUCB	341 - 68
CP2011	♦LUCB	341 - 69
CP2011A	♦LUCB	341 - 70
CP2012	♦LUCB	341 - 71
CP2012A	♦LUCB	341 - 72
CP2013	♦LUCB	341 - 73
CP2013A	♦LUCB	341 - 74
CP2015	♦LUCB	341 - 75
CP2015A	♦LUCB	341 - 76
CP2016	♦LUCB	341 - 77
CP2016A	♦LUCB	341 - 78
CP2018	♦LUCB	341 - 79
CP2018A	♦LUCB	341 - 80
CP2020	♦LUCB	341 - 81
CP2020A	♦LUCB	341 - 82
CP2022	♦LUCB	341 - 83
CP2022A	♦LUCB	341 - 84
CP2024	♦LUCB	341 - 85
CP2024A	♦LUCB	341 - 86
CP2027	♦LUCB	341 - 87
CP2027A	♦LUCB	341 - 88
CP2030	♦LUCB	341 - 89
CP2030A	♦LUCB	341 - 90
CP2033	♦LUCB	341 - 91
CP2033A	♦LUCB	341 - 92
CP2036	♦LUCB	341 - 93
CP2036A	♦LUCB	341 - 94
CP2039	♦LUCB	341 - 95
CP2039A	♦LUCB	341 - 96
CP2043	♦LUCB	341 - 97
CP2043A	♦LUCB	341 - 98
CP2047	♦LUCB	341 - 99
CP2047A	♦LUCB	341 -100
CP2051	♦LUCB	341 -101
CP2051A	♦LUCB	341 -102
CP2056	♦LUCB	341 -103
CP2056A	♦LUCB	341 -104
CP2062	♦LUCB	341 -105
CP2062A	♦LUCB	341 -106
CP2068	♦LUCB	341 -107
CP2068A	♦LUCB	341 -108
CP2075	♦LUCB	341 -109
CP2075A	♦LUCB	341 -110
CP2082	♦LUCB	342 - 1
CP2082A	♦LUCB	342 - 2
CP2091	♦LUCB	342 - 3
CP2091A	♦LUCB	342 - 4
CP2100	♦LUCB	342 - 5
CP2100A	♦LUCB	342 - 6
CP2110	♦LUCB	342 - 7
CP2110A	♦LUCB	342 - 8
CP2120	♦LUCB	342 - 9
CP2130	♦LUCB	342 - 10
CP2130A	♦LUCB	342 - 11
CP2140	♦LUCB	342 - 12
CP2150	♦LUCB	342 - 13
CP2150A	♦LUCB	342 - 14
CP2160	♦LUCB	342 - 15
CP2160A	♦LUCB	342 - 16
CP2170	♦LUCB	342 - 17
CP2170A	♦LUCB	342 - 18
CP2180	♦LUCB	342 - 19
CP2180A	♦LUCB	342 - 20
CP2200	♦LUCB	342 - 21
CP2200A	♦LUCB	342 - 22
CP2220	♦LUCB	342 - 23
CP2220A	♦LUCB	342 - 24
CP2250	♦LUCB	342 - 25
CP2250A	♦LUCB	342 - 26
CP2275	♦LUCB	342 - 27
CP2275A	♦LUCB	342 - 28
CP3009	♦LUCB	342 - 29
CP3009A	♦LUCB	342 - 30
CP3010	♦LUCB	342 - 31
CP3010A	♦LUCB	342 - 32
CP3011	♦LUCB	342 - 33
CP3011A	♦LUCB	342 - 34
CP3012	♦LUCB	342 - 35
CP3012A	♦LUCB	342 - 36
CP3013	♦LUCB	342 - 37
CP3013A	♦LUCB	342 - 38
CP3015	♦LUCB	342 - 39
CP3015A	♦LUCB	342 - 40
CP3016	♦LUCB	342 - 41
CP3016A	♦LUCB	342 - 42
CP3018	♦LUCB	342 - 43
CP3018A	♦LUCB	342 - 44
CP3020	♦LUCB	342 - 45
CP3020A	♦LUCB	342 - 46
CP3022	♦LUCB	342 - 47
CP3022A	♦LUCB	342 - 48
CP3024	♦LUCB	342 - 49
CP3024A	♦LUCB	342 - 50
CP3027	♦LUCB	342 - 51
CP3027A	♦LUCB	342 - 52
CP3030	♦LUCB	342 - 53
CP3030A	♦LUCB	342 - 54
CP3033	♦LUCB	342 - 55

TYPE No.	MFRS	Pg&Line
CP3033A	♦LUCB	342 - 56
CP3036	♦LUCB	342 - 57
CP3036A	♦LUCB	342 - 58
CP3039	♦LUCB	342 - 59
CP3039A	♦LUCB	342 - 60
CP3043	♦LUCB	342 - 61
CP3043A	♦LUCB	342 - 62
CP3047	♦LUCB	342 - 63
CP3047A	♦LUCB	342 - 64
CP3051	♦LUCB	342 - 65
CP3051A	♦LUCB	342 - 66
CP3056	♦LUCB	342 - 67
CP3056A	♦LUCB	342 - 68
CP3062	♦LUCB	342 - 69
CP3062A	♦LUCB	342 - 70
CP3068	♦LUCB	342 - 71
CP3068A	♦LUCB	342 - 72
CP3075	♦LUCB	342 - 73
CP3075A	♦LUCB	342 - 74
CP3082	♦LUCB	342 - 75
CP3082A	♦LUCB	342 - 76
CP3091	♦LUCB	342 - 77
CP3091A	♦LUCB	342 - 78
CP3100	♦LUCB	342 - 79
CP3100A	♦LUCB	342 - 80
CP3110	♦LUCB	342 - 81
CP3110A	♦LUCB	342 - 82
CP3120	♦LUCB	342 - 83
CP3120A	♦LUCB	342 - 84
CP3130	♦LUCB	342 - 85
CP3130A	♦LUCB	342 - 86
CP3140	♦LUCB	342 - 87
CP3150	♦LUCB	342 - 88
CP3150A	♦LUCB	342 - 89
CP3160	♦LUCB	342 - 90
CP3160A	♦LUCB	342 - 91
CP3170	♦LUCB	342 - 92
CP3170A	♦LUCB	342 - 93
CP3180	♦LUCB	342 - 94
CP3180A	♦LUCB	342 - 95
CP3200	♦LUCB	342 - 96
CP3200A	♦LUCB	342 - 97
CP3220	♦LUCB	342 - 98
CP3220A	♦LUCB	342 - 99
CP3250	♦LUCB	342 -100
CP3250A	♦LUCB	342 -101
CP3275	♦LUCB	342 -102
CP3275A	♦LUCB	342 -103
CR022	♦SIX	434 -106
CR024	♦SIX	434 -107
CR027	♦SIX	434 -108
CR030	♦SIX	434 -109
CR033	♦SIX	434 -110
CR039	♦SIX	435 - 1
CR043	♦SIX	435 - 2
CR047	♦SIX	435 - 3
CR056	♦SIX	435 - 4
CR062	♦SIX	435 - 5
CR068	♦SIX	435 - 6
CR075	♦SIX	435 - 7
CR082	♦SIX	435 - 8
CR091	♦SIX	435 - 9
CR100	♦SIX	435 - 10
CR110#C	♦SIX	435 - 11
CR120	♦SIX	435 - 12
CR130	♦SIX	435 - 13
CR140	♦SIX	435 - 14
CR150	♦SIX	435 - 15
CR160	♦SIX	435 - 16
CR180	♦SIX	435 - 17
CR200	♦SIX	435 - 18
CR220	♦SIX	435 - 19
CR240	♦SIX	435 - 20
CR270	♦SIX	435 - 21
CR300	♦SIX	435 - 22
CR330	♦SIX	435 - 23
CR360	♦SIX	435 - 24
CR390	♦SIX	435 - 25
CR430	♦SIX	435 - 26
CR470	♦SIX	435 - 27
CRD821	♦CODI	174 - 62
CRD823	♦CODI	174 - 63
CRD825	♦CODI	174 - 64
CRD827	♦CODI	174 - 65
CRD829	♦CODI	174 - 66
CRD921	♦CODI	174 - 67
CRD923	♦CODI	174 - 68
CRD925	♦CODI	174 - 69
CRD927	♦CODI	174 - 70
CRD929	♦CODI	174 - 71
CRG20	♦CODI	414 -175
CRG40	♦CODI	421 -125
CRG60	♦CODI	424 -122
CRG100	♦CODI	427 - 12
CRG150	♦CODI	429 - 12
CRG200	♦CODI	430 -105
CRHG3	♦SSI	241 -176
CRHG4	♦SSI	241 -192
CRHG5	♦SSI	241 -214
CRHG6	♦SSI	242 - 5
CRHG7	♦SSI	242 - 18
CRHG8	♦SSI	242 - 29
CRHG9	♦SSI	242 - 35
CRHG10	♦SSI	242 - 57
CRS20	♦CODI	247 -217
CRS40	♦CODI	248 - 6
CRS60	♦CODI	248 - 13
CRS100	♦CODI	248 - 19
CRS150	♦CODI	248 - 24
CRS200	♦CODI	248 - 28
CRT15	♦CODI	242 - 84
CRT20	♦CODI	242 -111
CRT25	♦CODI	242 -125
CRT30	♦CODI	242 -133

TYPE No.	MFRS	Pg&Line
CS299DC	♦CHE	315 - 19
CS299DI	♦CHE	315 - 17
CSB1	CSD	360 -120
CSB2	CSD	360 -153
CSB4	CSD	360 -188
CSB05	CSD	360 - 92
CSB6	CSD	361 - 11
CSB8	CSD	361 - 38
CSB10	CSD	361 - 61
CSB151	♦CSD	369 - 4
CSB152	♦CSD	369 - 30
CSB154	♦CSD	369 - 57
CSB156	♦CSD	369 - 82
CSB158	♦CSD	369 -102
CSB251	♦CSD	369 -214
CSB252	♦CSD	370 - 25
CSB254	♦CSD	370 - 62
CSB256	♦CSD	370 - 97
CSB258	♦CSD	370 -119
CSB351	♦CSD	371 - 43
CSB352	♦CSD	371 - 62
CSB354	♦CSD	371 - 79
CSB356	♦CSD	371 - 95
CSB358	♦CSD	371 -110
CSB1505	♦CSD	368 -207
CSB1510	♦CSD	403 - 92
CSB2505	♦CSD	369 -191
CSB2510	♦CSD	403 -129
CSB3505	♦CSD	371 - 24
CSB3510	♦CSD	403 -169
CSKB40C800	♦SEKG	361 - 85
CSKB40C1200	♦SEKG	361 -177
CSKB80C800	♦SEKG	361 -107
CSKB80C1200	♦SEKG	362 - 28
CSKB250C800	♦SEKG	361 -114
CSKB250C1200	♦SEKG	362 - 90
CSKB500C800	♦SEKG	361 -120
CSKB500C1200	♦SEKG	362 -124
CT21	♦CDIL	234 -110
CT22	♦CDIL	234 -111
CT23	♦CDIL	234 -112
CT24	♦CDIL	234 -113
CT26	♦CDIL	235 -150
CT27	♦CDIL	235 -151
CT28	♦CDIL	235 -152
CT29	♦CDIL	235 -153
CT31	♦CDIL	234 -114
CT32	♦CDIL	234 -115
CT33	♦CDIL	234 -116
CT34	♦CDIL	234 -117
CT36	♦CDIL	235 -154
CT37	♦CDIL	235 -155
CT38	♦CDIL	235 -156
CT39	♦CDIL	235 -157
CT40	♦CDIL	244 -185
CT41	♦CDIL	245 - 79
CT42	♦CDIL	245 -172
CT43	♦CDIL	246 -119
CT44	♦CDIL	247 - 21
CT45	♦CDIL	244 -186
CT46	♦CDIL	245 - 80
CT47	♦CDIL	245 -173
CT48	♦CDIL	246 -120
CT49	♦CDIL	247 - 22
CT50	♦CDIL	246 - 18
CT51	♦CDIL	245 - 81
CT52	♦CDIL	245 -174
CT53	♦CDIL	246 -121
CT54	♦CDIL	247 - 23
CT55	♦CDIL	244 -187
CT56	♦CDIL	245 - 82
CT57	♦CDIL	245 -175
CT58	♦CDIL	246 -122
CT59	♦CDIL	247 - 24
CT70	♦CDIL	244 -188
CT71	♦CDIL	245 - 83
CT72	♦CDIL	245 -176
CT73	♦CDIL	246 -123
CT74	♦CDIL	247 - 25
CT75	♦CDIL	244 -189
CT76	♦CDIL	245 - 84
CT77	♦CDIL	245 -177
CT78	♦CDIL	246 -124
CT79	♦CDIL	247 - 26
CT156	♦CDIL	234 - 79
CT157	♦CDIL	234 - 42
CT158	♦CDIL	233 -186
CT159	♦CDIL	233 - 50
CT161	♦CDIL	233 -203
CT162	♦CDIL	233 -135
CT163	♦CDIL	232 -193
CT164	♦CDIL	233 - 51
CT182	♦CDIL	234 -150
CT183	♦CDIL	234 -151
CT184	♦CDIL	234 -152
CT185	♦CDIL	234 -153
CT186	♦CDIL	234 -154
CT256	♦CDIL	234 - 80
CT257	♦CDIL	234 - 33
CT258	♦CDIL	233 -187
CT259	♦CDIL	233 - 52
CT282	♦CDIL	235 -158
CT283	♦CDIL	235 -159
CT284	♦CDIL	235 -160
CT285	♦CDIL	235 -161
CT286	♦CDIL	235 -162
CTM20R	SAKJ	283 -103
CTM20S	SAKJ	283 -104
CTM21R	SAKJ	283 -158
CTM21S	SAKJ	283 -159
CTM22R	SAKJ	284 - 4
CTM22S	SAKJ	284 - 5
CTM24R	SAKJ	284 -111
CTM24S	SAKJ	284 -112

TYPE No.	MFRS	Pg&Line
CTM26R	SAKJ	284 -213
CTM26S	SAKJ	284 -214
CTM-20	SAKJ	361 -150
CTM-21	SAKJ	361 -174
CTM-22	SAKJ	362 - 8
CTM-24	SAKJ	362 - 45
CTM-26	SAKJ	362 - 78
CTN61	♦DII	366 - 54
	♦RECT	
CTN62	♦DII	366 - 80
	♦RECT	
CTN64	♦DII	366 -109
	♦RECT	
CTN66	♦DII	366 -137
	♦RECT	
CTN68	♦DII	366 -164
	♦RECT	
CTN121	♦RECT	294 -205
CTN122	♦RECT	295 - 18
CTN124	♦RECT	295 - 70
CTN126	♦RECT	295 -119
CTN128	♦RECT	295 -157
CTN151	♦DII	368 -212
	♦RECT	
CTN152	♦DII	369 - 16
	♦RECT	
CTN154	♦DII	369 - 44
	♦RECT	
CTN156	♦DII	369 - 68
	♦RECT	
CTN158	♦DII	369 - 91
	♦RECT	
CTN251	♦DII	369 -198
	♦RECT	
CTN252	♦DII	370 - 7
	♦RECT	
CTN254	♦DII	370 - 44
	♦RECT	
CTN256	♦DII	370 - 79
	♦RECT	
CTN258	♦DII	370 -106
	♦RECT	
CTN351	♦DII	371 - 29
	♦RECT	
CTN352	♦DII	371 - 50
	♦RECT	
CTN354	♦DII	371 - 67
	♦RECT	
CTN356	♦DII	371 - 83
	♦RECT	
CTN358	♦DII	371 - 99
	♦RECT	
CTN605	♦DII	366 - 31
	♦RECT	
CTN610	♦DII	366 -184
	♦RECT	
CTN1205	♦RECT	294 -177
CTN1210	♦RECT	403 - 58
CTN1505	♦DII	368 -195
	♦RECT	
CTN1510	♦DII	369 -106
	♦RECT	
CTN2505	♦DII	369 -175
	♦RECT	
CTN2510	♦DII	370 -124
	♦RECT	
CTN3505	♦DII	371 - 10
	♦RECT	
CTN3510	♦DII	371 -112
	♦RECT	
CTNRB151	♦DII	283 - 88
	♦RECT	
CTNRB152	♦DII	283 -139
	♦RECT	
CTNRB153	♦DII	283 -204
	♦RECT	
CTNRB154	♦DII	284 - 91
	♦RECT	
CTNRB155	♦DII	284 -194
	♦RECT	
CTNRB156	♦DII	285 - 55
	♦RECT	
CTNRB157	♦DII	402 - 60
	♦RECT	
CTP50	MAL	283 -110
CTP61	♦DII	366 - 55
	♦RECT	
CTP62	♦DII	366 - 81
	♦RECT	
CTP64	♦DII	366 -110
	♦RECT	
CTP66	♦DII	366 -138
	♦RECT	
CTP68	♦DII	366 -165
	♦RECT	
CTP100	MAL	283 -165
CTP121	♦RECT	294 -206
CTP122	♦RECT	295 - 19
CTP124	♦RECT	295 - 71
CTP126	♦RECT	295 -120
CTP128	♦RECT	295 -158
CTP151	♦DII	368 -213
	♦RECT	
CTP152	♦DII	369 - 17
	♦RECT	
CTP154	♦DII	369 - 45
	♦RECT	
CTP156	♦DII	369 - 69
	♦RECT	
CTP158	♦DII	369 - 92
	♦RECT	
CTP200	MAL	284 - 13
CTP251	♦DII	369 -199
	♦RECT	

1. TYPE No. CROSS INDEX

IN TYPE NUMBER SEQUENCE

TYPE No.	MFRS	Pg&Line
CTP252	♦DII	370 - 8
	♦RECT	
CTP254	♦DII	370 - 45
	♦RECT	
CTP256	♦DII	370 - 80
	♦RECT	
CTP258	♦DII	370 -107
	♦RECT	
CTP300	MAL	284 - 57
CTP351	♦DII	371 - 30
	♦RECT	
CTP352	♦DII	371 - 51
	♦RECT	
CTP354	♦DII	371 - 68
	♦RECT	
CTP356	♦DII	371 - 84
	♦RECT	
CTP358	♦DII	371 -100
	♦RECT	
CTP500	MAL	284 -164
CTP600	MAL	285 - 4
CTP605	♦DII	366 - 32
	♦RECT	
CTP610	♦DII	366 -185
	♦RECT	
CTP1000	MAL	402 - 79
CTP1205	♦RECT	294 -178
CTP1210	♦RECT	403 - 59
CTP1505	♦DII	368 -196
	♦RECT	
CTP1510	♦DII	369 -107
	♦RECT	
CTP2505	♦DII	369 -176
	♦RECT	
CTP2510	♦DII	370 -125
	♦RECT	
CTP3505	♦DII	371 - 11
	♦RECT	
CTP3510	♦DII	371 -113
	♦RECT	
CTPRB151	♦DII	283 - 89
	♦RECT	
CTPRB152	♦DII	283 -140
	♦RECT	
CTPRB153	♦DII	283 -205
	♦RECT	
CTPRB154	♦DII	284 - 92
	♦RECT	
CTPRB155	♦DII	284 -195
	♦RECT	
CTPRB156	♦DII	285 - 56
	♦RECT	
CTPRB157	♦DII	402 - 61
	♦RECT	
CTU20R	SAKJ	246 - 15
CTU20S	SAKJ	246 - 16
CTU21R	SAKJ	247 - 82
CTU21S	SAKJ	247 - 83
CTU22R	SAKJ	247 -131
CTU22S	SAKJ	247 -132
CTU24R	SAKJ	247 -161
CTU24S	SAKJ	247 -162
CTU26R	SAKJ	247 -182
CTU26S	SAKJ	247 -183
CTU-20	SAKJ	361 - 73
CTU-21	SAKJ	361 - 74
CTU-22	SAKJ	361 - 75
CTU-24	SAKJ	361 - 76
CTU-26	SAKJ	361 - 77
CTZ3.0	♦CDIL	165 -121
CTZ3.0A	♦CDIL	165 -105
CTZ3.3	♦CDIL	166 - 55
CTZ3.3A	♦CDIL	166 - 38
CTZ3.6	♦CDIL	167 - 19
CTZ3.6A	♦CDIL	167 - 4
CTZ3.9	♦CDIL	167 -196
CTZ3.9A	♦CDIL	167 -181
CTZ4.3	♦CDIL	169 - 10
CTZ4.3A	♦CDIL	168 -205
CTZ4.7	♦CDIL	170 - 57
CTZ4.7A	♦CDIL	170 - 38
CTZ5.1	♦CDIL	171 -137
CTZ5.1A	♦CDIL	171 -119
CTZ5.6	♦CDIL	173 - 16
CTZ5.6A	♦CDIL	172 -207
CTZ6.2	♦CDIL	175 - 81
CTZ6.2A	♦CDIL	175 - 59
CTZ6.8	♦CDIL	178 - 52
CTZ6.8A	♦CDIL	178 - 28
CTZ7.5	♦CDIL	180 - 48
CTZ7.5A	♦CDIL	180 - 27
CTZ8.2	♦CDIL	182 - 28
CTZ8.2A	♦CDIL	182 - 6
CTZ9.1	♦CDIL	185 - 62
CTZ9.1A	♦CDIL	185 - 41
CTZ10	♦CDIL	187 -111
CTZ10A	♦CDIL	187 - 86
CTZ11	♦CDIL	189 - 48
CTZ11A	♦CDIL	189 - 28
CTZ12	♦CDIL	191 - 7
CTZ12A	♦CDIL	190 -199
CTZ13	♦CDIL	192 -182
CTZ13A	♦CDIL	192 -165
CTZ15	♦CDIL	195 - 7
CTZ15A	♦CDIL	194 -185
CTZ16	♦CDIL	196 -112
CTZ16A	♦CDIL	196 - 94
CTZ18	♦CDIL	198 -121
CTZ18A	♦CDIL	198 - 98
CTZ20	♦CDIL	200 -118
CTZ20A	♦CDIL	200 - 98
CTZ22	♦CDIL	202 - 14
CTZ22A	♦CDIL	201 -203
CTZ24	♦CDIL	203 -118

TYPE No.	MFRS	Pg&Line
CTZ24A	♦CDIL	203 -100
CTZ27	♦CDIL	205 - 52
CTZ27A	♦CDIL	205 - 33
CTZ30	♦CDIL	206 -187
CTZ30A	♦CDIL	206 -169
CTZ33	♦CDIL	208 - 76
CTZ33A	♦CDIL	208 - 57
CTZ36	♦CDIL	209 -148
CTZ36A	♦CDIL	209 -133
CTZ39	♦CDIL	210 -185
CTZ39A	♦CDIL	210 -169
CTZ43	♦CDIL	211 -201
CTZ43A	♦CDIL	211 -186
CTZ47	♦CDIL	213 - 12
CTZ47A	♦CDIL	212 -198
CTZC6.8,A,B,D		379 - 15
	♦SCN	
CTZC6.8C	♦SCN	379 - 6
CTZC6.8E	♦SCN	379 - 8
CTZC7.5,A,B,D		379 -127
	♦SCN	
CTZC7.5C	♦SCN	379 -118
CTZC7.5E	♦SCN	379 -120
CTZC8.2,A,B,D		380 - 48
	♦SCN	
CTZC8.2C	♦SCN	380 - 38
CTZC8.2E	♦SCN	380 - 40
CTZC9.1,A,B,D		380 -176
	♦SCN	
CTZC9.1C	♦SCN	380 -167
CTZC9.1E	♦SCN	380 -169
CTZC10,A,B,D	♦SCN	381 - 75
CTZC10C	♦SCN	381 - 66
CTZC10E	♦SCN	381 - 68
CTZC11,A,B,D	♦SCN	381 -188
CTZC11C	♦SCN	381 -179
CTZC11E	♦SCN	381 -181
CTZC12,A,B,D	♦SCN	382 - 83
CTZC12C	♦SCN	382 - 73
CTZC12E	♦SCN	382 - 75
CTZC13,A,B,D	♦SCN	382 -199
CTZC13C	♦SCN	382 -189
CTZC13E	♦SCN	382 -191
CTZC14,A,B,D	♦SCN	383 - 97
CTZC14C	♦SCN	383 - 90
CTZC14E	♦SCN	383 - 92
CTZC15,A,B,D	♦SCN	383 -163
CTZC15C	♦SCN	383 -153
CTZC15E	♦SCN	383 -155
CTZC17,A,B,D	♦SCN	384 -172
CTZC17C	♦SCN	384 -166
CTZC17E	♦SCN	384 -168
CTZC18,A,B,D	♦SCN	385 - 29
CTZC18C	♦SCN	385 - 19
CTZC18E	♦SCN	385 - 21
CTZC19,A,B,D	♦SCN	385 -137
CTZC19C	♦SCN	385 -131
CTZC19E	♦SCN	385 -133
CTZC20,A,B,D	♦SCN	385 -183
CTZC20C	♦SCN	385 -173
CTZC20E	♦SCN	385 -175
CTZC22,A,B,D	♦SCN	386 - 88
CTZC22C	♦SCN	386 - 78
CTZC22E	♦SCN	386 - 80
CTZC24,A,B,D	♦SCN	387 - 4
CTZC24C	♦SCN	386 -194
CTZC24E	♦SCN	386 -196
CTZC25,A,B,D	♦SCN	387 -104
CTZC25C	♦SCN	387 - 98
CTZC25E	♦SCN	387 -100
CTZC27,A,B,D	♦SCN	387 -142
CTZC27C	♦SCN	387 -132
CTZC27E	♦SCN	387 -134
CTZC30,A,B,D	♦SCN	388 - 62
CTZC30C	♦SCN	388 - 52
CTZC30E	♦SCN	388 - 54
CTZC33,A,B,D	♦SCN	388 -167
CTZC33C	♦SCN	388 -157
CTZC33E	♦SCN	388 -159
CTZC36,A,B,D	♦SCN	389 - 81
CTZC36C	♦SCN	389 - 71
CTZC36E	♦SCN	389 - 73
CTZC39,A,B,D	♦SCN	389 -185
CTZC39C	♦SCN	389 -175
CTZC39E	♦SCN	389 -177
CTZC43,A,B,D	♦SCN	390 - 96
CTZC43C	♦SCN	390 - 86
CTZC43E	♦SCN	390 - 88
CTZC45,A,B,D	♦SCN	390 -174
CTZC45C	♦SCN	390 -169
CTZC45E	♦SCN	390 -171
CTZC47,A,B,D	♦SCN	391 - 28
CTZC47C	♦SCN	391 - 17
CTZC47E	♦SCN	391 - 19
CTZC50,A,B,D	♦SCN	391 -114
CTZC50C	♦SCN	391 -109
CTZC50E	♦SCN	391 -111
CTZC51,A,B,D	♦SCN	391 -166
CTZC51C	♦SCN	391 -156
CTZC51E	♦SCN	391 -158
CTZC52,A,B,D	♦SCN	392 - 38
CTZC52C	♦SCN	392 - 34
CTZC52E	♦SCN	392 - 36
CTZC56,A,B,D	♦SCN	392 - 74
CTZC56C	♦SCN	392 - 64
CTZC56E	♦SCN	392 - 66
CTZC62,A,B,D	♦SCN	393 - 1
CTZC62C	♦SCN	392 -190
CTZC62E	♦SCN	392 -192
CTZC68,A,B,D	♦SCN	393 - 90
CTZC68C	♦SCN	393 - 80
CTZC68E	♦SCN	393 - 82
CTZC75,A,B,D	♦SCN	394 - 3
CTZC75C	♦SCN	393 -191

TYPE No.	MFRS	Pg&Line
CTZC75E	♦SCN	393 -193
CTZC82,A,B,D	♦SCN	394 -118
CTZC82C	♦SCN	394 -108
CTZC82E	♦SCN	394 -110
CTZC91,A,B,D	♦SCN	395 - 29
CTZC91C	♦SCN	395 - 19
CTZC91E	♦SCN	395 - 21
CTZC100,A,B,D		395 -119
	♦SCN	
CTZC100C	♦SCN	395 -109
CTZC100E	♦SCN	395 -111
CTZC105,A,B,D		396 - 19
	♦SCN	
CTZC105C	♦SCN	396 - 15
CTZC105E	♦SCN	396 - 17
CTZC110,A,B,D		396 - 55
	♦SCN	
CTZC110C	♦SCN	396 - 46
CTZC110E	♦SCN	396 - 48
CTZC120,A,B,D		396 -141
	♦SCN	
CTZC120C	♦SCN	396 -132
CTZC120E	♦SCN	396 -134
CTZC130,A,B,D		397 - 30
	♦SCN	
CTZC130C	♦SCN	397 - 21
CTZC130E	♦SCN	397 - 23
CTZC140,A,B,D		397 -114
	♦SCN	
CTZC140C	♦SCN	397 -107
CTZC140E	♦SCN	397 -109
CTZC150,A,B,D		397 -167
	♦SCN	
CTZC150C	♦SCN	397 -158
CTZC150E	♦SCN	397 -160
CTZC160,A,B,D		398 - 57
	♦SCN	
CTZC160C	♦SCN	398 - 48
CTZC160E	♦SCN	398 - 50
CTZC180,A,B,D		398 -170
	♦SCN	
CTZC180C	♦SCN	398 -161
CTZC180E	♦SCN	398 -163
CTZC200,A,B,D		399 - 79
	♦SCN	
CTZC200C	♦SCN	399 - 70
CTZC200E	♦SCN	399 - 72
CV7	♦CDIL	180 - 49
CV8	♦CDIL	182 - 29
CV9	♦CDIL	185 - 63
CY501H	THEF	433 - 49
CY751H	THEF	433 - 89
CZ5	♦CDIL	173 -151
CZ6	♦CDIL	177 -151
CZ6.8,A,B,D	CEN	178 -109
CZ7	♦CDIL	179 -143
CZ7.5,A,B,D	CEN	180 -103
CZ8	♦CDIL	181 -123
CZ8.2,A,B,D	CEN	182 - 86
CZ9	♦CDIL	184 -138
CZ9.1,A,B,D	CEN	185 -118
CZ10	♦CDIL	186 -201
CZ10,A,B,D	CEN	187 -177
CZ11,A,B,D	CEN	189 - 91
CZ12,A,B,D	CEN	191 - 59
CZ13,A,B,D	CEN	193 - 10
CZ14,A,B,D	CEN	194 - 6
CZ15,A,B,D	CEN	195 - 59
CZ16,A,B,D	CEN	196 -152
CZ17,A,B,D	CEN	197 -129
CZ18,A,B,D	CEN	198 -168
CZ19,A,B,D	CEN	199 -141
CZ20,A,B,D	CEN	200 -160
CZ22,A,B,D	CEN	202 - 60
CZ24,A,B,D	CEN	203 -158
CZ25,A,B,D	CEN	204 -118
CZ27,A,B,D	CEN	205 - 96
CZ30,A,B,D	CEN	207 - 22
CZ33,A,B,D	CEN	208 -115
dc3B24	CSD	430 -139
dc3B28	CSD	427 -113
dc3B29	CSD	429 -194
dc5R4	CSD	419 -122
dc5U4	CSD	411 - 31
dc5V4	CSD	409 - 55
dc5Y3	CSD	409 - 60
dc5Z3	CSD	411 - 4
dc5Z4	CSD	409 - 56
dc6AX5	CSD	405 -194
dc6X4	CSD	405 -195
dc10.5	♦CSD	367 -123
dc25Z6	CSD	275 -146
dc80	CSD	409 - 57
dc101	♦CSD	367 -154
dc102	♦CSD	367 -192
dc104	♦CSD	368 - 12
dc106	♦CSD	368 - 51
dc108	♦CSD	368 - 77
dc110	♦CSD	403 - 48
dc250R	CSD	433 - 84
dc300.5	CSD	362 -189
dc301	CSD	363 - 19
dc302	CSD	363 - 61
dc304	CSD	363 -108
dc306	CSD	363 -153
dc308	CSD	363 -191
dc310	CSD	364 - 2
dc371A	CSD	431 -120
dc575	CSD	429 -119
dc576	CSD	431 -131
dc600.5	♦CSD	366 - 39
dc601	♦CSD	366 - 63
dc602	♦CSD	366 - 89
dc604	♦CSD	366 -118

TYPE No.	MFRS	Pg&Line
dc606	♦CSD	366 -146
dc608	♦CSD	366 -173
dc610	♦CSD	403 - 17
dc673	CSD	429 -120
dc866	CSD	427 -114
dc872	CSD	427 -146
dc8008	CSD	427 -147
dc8020	CSD	432 -170
dcB100	CSD	362 -130
dcB100F	CSD	272 -147
dcB101	CSD	362 -133
dcB101F	CSD	272 -151
dcB102	CSD	362 -136
dcB102F	CSD	272 -155
dcB104	CSD	362 -139
dcB104F	CSD	272 -159
dcB106	CSD	362 -147
dcB106F	CSD	272 -163
dcB108	CSD	362 -148
dcB110	CSD	362 -150
D0.22/100x11	AEGG	360 - 9
D0.22/100X11	AEGG	433 -132
D0.22/125x31	AEGG	360 - 10
D0.22/125X31	AEGG	433 -186
D0.22/150x31	AEGG	360 - 11
D0.22/150X31	AEGG	433 -194
D0.22/80x41	AEGG	433 -197
D0.24S10	♦AEGG	428 - 10
D0.25S8	♦AEGG	426 - 51
D0.42S5	♦AEGG	423 -150
D1.5/1000	♦AEGG	402 - 82
D1.5/200	♦AEGG	284 - 25
D1.5/400	♦AEGG	284 -132
D1.5/600	♦AEGG	285 - 12
D1.5/800	♦AEGG	285 - 80
D2S100	♦AEGG	247 - 87
D2S200	♦AEGG	247 -137
D2S400	♦AEGG	313 - 37
D2S800	♦AEGG	247 -197
D3-200	♦AEGG	288 - 99
D3-400	♦AEGG	288 -198
D3-600	♦AEGG	289 - 65
D3-800	♦AEGG	289 -135
D3-1300	AEGG	408 -203
D5FB10	♦SHEJ	237 - 79
D5FB20	♦SHEJ	290 -174
D5FB40	♦SHEJ	291 - 7
D5FB60	♦SHEJ	237 - 80
D6/400A	♦AEGG	292 - 65
D6/800A	♦AEGG	292 -175
D6/1200A	♦AEGG	406 -147
D6/1400A	♦AEGG	409 -101
D6/1600A	♦AEGG	412 - 96
D9B	USSR	274 - 56
D9D	USSR	274 - 57
D9E	USSR	274 - 62
D9G	USSR	274 - 58
D9I	USSR	274 - 59
D9K	USSR	274 - 60
D9L	USSR	274 - 63
D9SZ	USSR	274 - 64
D9V	USSR	274 - 61
D10N400B	♦AEGG	294 - 95
D10N400C	♦AEGG	294 - 96
D10N800B	♦AEGG	294 -147
D10N800C	♦AEGG	294 -148
D10N1200B	♦AEGG	406 -164
D10N1200C	♦AEGG	406 -165
D10N1400B	♦AEGG	409 -106
D10N1400C	♦AEGG	409 -107
D10N1600B	♦AEGG	412 -103
D10N1600C	♦AEGG	412 -104
D18#B	USSR	249 -144
D20	USSR	249 -143
D21S1000C	AEGG	263 - 47
D21S1200C	AEGG	263 - 49
D21S1400C	AEGG	263 - 52
D24/400B	♦AEGG	301 - 69
D24/400C	♦AEGG	301 - 70
D24/800B	♦AEGG	301 - 73
D24/800C	♦AEGG	301 - 74
D24/1200B	♦AEGG	407 - 23
D24/1200C	♦AEGG	407 - 24
D24/1400B	♦AEGG	409 -148
D24/1400C	♦AEGG	409 -149
D24/1600B	♦AEGG	412 -139
D24/1600C	♦AEGG	412 -140
D24/1800B	♦AEGG	414 - 12
D24/1800C	♦AEGG	414 - 13
D24N400B	♦AEGG	298 - 71
D24N400C	♦AEGG	298 - 72
D24N400U	♦AEGG	298 - 73
D24N800B	♦AEGG	298 - 81
D24N800C	♦AEGG	298 - 82
D24N800U	♦AEGG	298 - 83
D24N1200B	♦AEGG	406 -205
D24N1200C	♦AEGG	406 -206
D24N1200U	♦AEGG	406 -207
D24N1400B	♦AEGG	409 -122
D24N1400C	♦AEGG	409 -123
D24N1400U	♦AEGG	409 -124
D24N1600B	♦AEGG	412 -115
D24N1600C	♦AEGG	412 -116
D24N1600U	♦AEGG	412 -117
D24NR400B	♦AEGG	298 - 74
D24NR400C	♦AEGG	298 - 75
D24NR400U	♦AEGG	298 - 76
D24NR800B	♦AEGG	298 - 84
D24NR800C	♦AEGG	298 - 85
D24NR800U	♦AEGG	298 - 86
D24NR1200B	♦AEGG	406 -208
D24NR1200C	♦AEGG	406 -209
D24NR1200U	♦AEGG	406 -210
D24NR1400B	♦AEGG	409 -125

TYPE No.	MFRS	Pg&Line
D24NR1400C	♦AEGG	409 -126
D24NR1400U	♦AEGG	409 -127
D24NR1600B	♦AEGG	412 -118
D24NR1600C	♦AEGG	412 -119
D24NR1600U	♦AEGG	412 -120
D30S3	SHEJ	263 - 34
D30S4	SHEJ	263 - 38
D30S1000C	AEGG	263 - 48
D30S1200C	AEGG	263 - 50
D30S1400C	AEGG	263 - 53
D34/400B	♦AEGG	303 - 38
D34/400C	♦AEGG	303 - 39
D34/800B	♦AEGG	303 - 40
D34/800C	♦AEGG	303 - 41
D34/1200B	♦AEGG	407 - 58
D34/1200C	♦AEGG	407 - 59
D34/1400B	♦AEGG	409 -168
D34/1400C	♦AEGG	409 -169
D34/1600B	♦AEGG	412 -156
D34/1600C	♦AEGG	412 -157
D34/1800B	♦AEGG	414 - 14
D34/1800C	♦AEGG	414 - 15
D34N400B	♦AEGG	300 -176
D34N400C	♦AEGG	300 -177
D34N400U	♦AEGG	300 -178
D34N800B	♦AEGG	300 -182
D34N800C	♦AEGG	300 -183
D34N800U	♦AEGG	300 -184
D34N1200B	♦AEGG	407 - 11
D34N1200C	♦AEGG	407 - 12
D34N1200U	♦AEGG	407 - 13
D34N1400B	♦AEGG	409 -140
D34N1400C	♦AEGG	409 -141
D34N1400U	♦AEGG	409 -142
D34N1600B	♦AEGG	412 -133
D34N1600C	♦AEGG	412 -134
D34N1600U	♦AEGG	412 -135
D34NR400B	♦AEGG	300 -179
D34NR400C	♦AEGG	300 -180
D34NR400U	♦AEGG	300 -181
D34NR800B	♦AEGG	300 -185
D34NR800C	♦AEGG	300 -186
D34NR800U	♦AEGG	300 -187
D34NR1200B	♦AEGG	407 - 14
D34NR1200C	♦AEGG	407 - 15
D34NR1200U	♦AEGG	407 - 16
D34NR1400B	♦AEGG	409 -143
D34NR1400C	♦AEGG	409 -144
D34NR1400U	♦AEGG	409 -145
D34NR1600B	♦AEGG	412 -136
D34NR1600C	♦AEGG	412 -137
D34NR1600U	♦AEGG	412 -138
D40H	♦THEF	421 -201
D60-700	AEGG	305 -117
D60-1100	AEGG	405 - 98
D60/400B	♦AEGG	304 - 5
D60/800B	♦AEGG	304 - 7
D60/1200B	♦AEGG	407 - 77
D60/1400B	♦AEGG	409 -183
D60/1600B	♦AEGG	412 -170
D60H	THEF	424 -201
D60N400B	♦AEGG	303 -148
D60N400C	♦AEGG	303 -149
D60N400U	♦AEGG	303 -150
D60N800B	♦AEGG	303 -201
D60N800C	♦AEGG	303 -202
D60N800U	♦AEGG	303 -203
D60N1200B	♦AEGG	407 - 64
D60N1200C	♦AEGG	407 - 65
D60N1200U	♦AEGG	407 - 66
D60N1400B	♦AEGG	409 -172
D60N1400C	♦AEGG	409 -173
D60N1400U	♦AEGG	409 -174
D60N1600B	♦AEGG	412 -159
D60N1600C	♦AEGG	412 -160
D60N1600U	♦AEGG	412 -161
D60NR400B	♦AEGG	303 -151
D60NR400C	♦AEGG	303 -152
D60NR400U	♦AEGG	303 -153
D60NR800B	♦AEGG	303 -204
D60NR800C	♦AEGG	303 -205
D60NR800U	♦AEGG	303 -206
D60NR1200B	♦AEGG	407 - 67
D60NR1200C	♦AEGG	407 - 68
D60NR1200U	♦AEGG	407 - 69
D60NR1400B	♦AEGG	409 -175
D60NR1400C	♦AEGG	409 -176
D60NR1400U	♦AEGG	409 -177
D60NR1600B	♦AEGG	412 -162
D60NR1600C	♦AEGG	412 -163
D60NR1600U	♦AEGG	412 -164
D75N400B	♦AEGG	306 - 50
D75N400C	♦AEGG	306 - 51
D75N400U	♦AEGG	306 - 52
D75N800B	♦AEGG	306 -152
D75N800C	♦AEGG	306 -153
D75N800U	♦AEGG	306 -154
D75N1200B	♦AEGG	407 -144
D75N1200C	♦AEGG	407 -145
D75N1200U	♦AEGG	407 -146
D75N1400B	♦AEGG	409 -218
D75N1400C	♦AEGG	409 -219
D75N1400U	♦AEGG	409 -220
D75N1600B	♦AEGG	412 -200
D75N1600C	♦AEGG	412 -201
D75N1600U	♦AEGG	412 -202
D75NR400B	♦AEGG	306 - 53
D75NR400C	♦AEGG	306 - 54
D75NR400U	♦AEGG	306 - 55
D75NR800B	♦AEGG	306 -155
D75NR800C	♦AEGG	306 -156
D75NR800U	♦AEGG	306 -157
D75NR1200B	♦AEGG	407 -147
D75NR1200C	♦AEGG	407 -148

Δ-Registered with JEDEC by this manufacturer

♦-Mfr's data sheet available in microfilm service

1. TYPE No. CROSS INDEX

IN TYPE NUMBER SEQUENCE

TYPE No.	MFRS	Pg&Line
D75NR1200U	♦AEGG	407 -149
D75NR1400B	♦AEGG	410 - 1
D75NR1400C	♦AEGG	410 - 2
D75NR1400U	♦AEGG	410 - 3
D75NR1600B	♦AEGG	412 -203
D75NR1600C	♦AEGG	412 -204
D75NR1600U	♦AEGG	412 -205
D80H	♦THEF	426 - 71
D100H	♦THEF	427 -111
D121N400B	♦AEGG	306 -202
D121N400V	♦AEGG	306 -203
D121N800B	♦AEGG	306 -204
D121N800V	♦AEGG	306 -205
D121N1200B	♦AEGG	407 -172
D121N1200V	♦AEGG	407 -173
D121N1400B	♦AEGG	410 - 20
D121N1400V	♦AEGG	410 - 21
D121N1800B	♦AEGG	414 - 24
D121N1800V	♦AEGG	414 - 25
D121NR400B	♦AEGG	305 -175
D121NR400V	♦AEGG	305 -176
D121NR800B	♦AEGG	305 -177
D121NR800V	♦AEGG	305 -178
D121NR1200B	♦AEGG	407 -124
D121NR1200V	♦AEGG	407 -125
D121NR1400B	♦AEGG	409 -212
D121NR1400V	♦AEGG	409 -213
D121NR1800B	♦AEGG	414 - 16
D121NR1800V	♦AEGG	414 - 17
D150/2800B	♦AEGG	418 -177
D150/3200B	♦AEGG	420 - 72
D150/3600B	♦AEGG	421 - 27
D150H	THEF	429 - 82
D150R3200B	♦AEGG	420 - 73
D150R3600B	♦AEGG	421 - 28
D200HL	♦THEF	430 -166
D206	USSR	274 -125
D207	USSR	274 -135
D208	USSR	274 -147
D209	USSR	274 -154
D210	USSR	274 -162
D211	USSR	274 -168
D219A	USSR	249 - 47
D220	USSR	249 - 30
D220A	USSR	249 - 48
D220B	USSR	249 - 71
D223B	USSR	274 - 84
D226B	USSR	276 - 15
D226D	USSR	275 -210
D226G	USSR	275 -220
D226V	USSR	276 - 7
D229D	USSR	276 - 78
D229E	USSR	276 - 89
D229G	USSR	276 - 69
D229V	USSR	276 - 59
D240R200B	♦AEGG	310 - 16
D240R400B	♦AEGG	310 - 17
D240R600B	♦AEGG	310 - 18
D240R700B	♦AEGG	310 - 19
D242	USSR	294 - 1
D242A	USSR	294 - 2
D242B	USSR	290 -136
D243	USSR	294 - 32
D243A	USSR	294 - 33
D243B	USSR	290 -168
D245	USSR	294 - 59
D245A	USSR	294 - 60
D245B	USSR	290 -198
D246	USSR	294 - 79
D246A	USSR	294 - 80
D246B	USSR	290 -220
D247	USSR	294 -107
D247B	USSR	291 - 27
D248B	USSR	291 - 42
D250/400E	♦AEGG	310 - 74
D250/800E	♦AEGG	310 -106
D250/1200E	♦AEGG	408 - 35
D250/1400E	♦AEGG	410 - 75
D250/1600E	♦AEGG	413 - 36
D250/1800E	♦AEGG	414 - 43
D250HL	♦THEF	431 -128
D251N800B	♦AEGG	310 - 5
D251N800E	♦AEGG	310 - 6
D251N800V	♦AEGG	310 - 7
D251N1200B	♦AEGG	408 - 27
D251N1200E	♦AEGG	408 - 28
D251N1200V	♦AEGG	408 - 29
D251N1400B	♦AEGG	410 - 68
D251N1400E	♦AEGG	410 - 69
D251N1400V	♦AEGG	410 - 70
D251N1800B	♦AEGG	414 - 40
D251N1800E	♦AEGG	414 - 41
D251N1800V	♦AEGG	414 - 42
D251NR800E	♦AEGG	309 -213
D251NR800V	♦AEGG	309 -214
D251NR1200B	♦AEGG	408 - 16
D251NR1200E	♦AEGG	408 - 17
D251NR1200V	♦AEGG	408 - 18
D251NR1400B	♦AEGG	410 - 63
D251NR1400E	♦AEGG	410 - 64
D251NR1800B	♦AEGG	414 - 36
D251NR1800E	♦AEGG	414 - 37
D255N200B	♦AEGG	308 -168
D255N200V	♦AEGG	308 -169
D255N400B	♦AEGG	308 -188
D255N400V	♦AEGG	308 -189
D255N600B	♦AEGG	308 -204
D255N600V	♦AEGG	308 -205
D255N700B	♦AEGG	308 -207
D255N700V	♦AEGG	308 -208
D255N800B	♦AEGG	309 - 2
D255N800V	♦AEGG	309 - 3
D255NR200B	♦AEGG	307 -102
D255NR200V	♦AEGG	307 -103

TYPE No.	MFRS	Pg&Line
D255NR400B	♦AEGG	307 -168
D255NR400V	♦AEGG	307 -169
D255NR600B	♦AEGG	307 -213
D255NR600V	♦AEGG	307 -214
D255NR700B	♦AEGG	308 - 14
D255NR700V	♦AEGG	308 - 15
D255NR800B	♦AEGG	308 - 38
D255NR800V	♦AEGG	308 - 39
D269/2800	♦AEGG	418 -178
D269/3200	♦AEGG	420 - 74
D269/3600	♦AEGG	421 - 29
D300-700	♦AEGG	310 - 98
D300-1100	♦AEGG	405 -131
D302	USSR	280 -130
D303	USSR	288 - 56
D304	USSR	290 -137
D305	USSR	293 -201
D401N3600E	♦AEGG	421 - 39
D401N4000E	♦AEGG	422 - 69
D401N4400E	♦AEGG	422 -172
D401N4800E	♦AEGG	423 - 48
D401R3600E	♦AEGG	421 - 40
D401R4000E	♦AEGG	422 - 70
D401R4400E	♦AEGG	422 -173
D401R4800E	♦AEGG	423 - 49
D405NR2000	♦AEGG	415 -161
D405NR2200	♦AEGG	416 - 99
D405NR2400	♦AEGG	417 - 34
D405NR2600	♦AEGG	418 - 71
D405NR2800	♦AEGG	418 -181
D428N800	♦AEGG	311 - 72
D428N1200	♦AEGG	408 - 74
D428N1400	♦AEGG	410 -108
D428N1800	♦AEGG	414 - 61
D431S2400T	AEGG	265 -110
D431S2800T	AEGG	265 -111
D431S3200T	AEGG	265 -112
D431S3600T	AEGG	265 -113
D448N400	♦AEGG	311 - 78
D448N600	♦AEGG	311 - 82
D448N700	♦AEGG	311 - 84
D448N800	♦AEGG	311 - 85
D452N400	♦AEGG	311 - 79
D452N800	♦AEGG	311 - 86
D452N1200	♦AEGG	408 - 77
D452N1400	♦AEGG	410 -114
D452N1800	♦AEGG	414 - 64
D452NR400	♦AEGG	311 - 80
D452NR800	♦AEGG	311 - 87
D452NR1200	♦AEGG	408 - 78
D452NR1400	♦AEGG	410 -115
D452NR1800	♦AEGG	414 - 65
D621EB	COO	257 -150
D621EC	COO	258 - 61
D621ED	COO	258 -202
D621EE	COO	259 - 56
D621EF	COO	259 -160
D621EG	COO	259 -185
D628EB	COO	257 -151
D628EC	COO	258 - 62
D628ED	COO	258 -203
D628EE	COO	259 - 57
D628EF	COO	259 -161
D628EG	COO	259 -186
D629/3600	♦AEGG	421 - 42
D629/4000	♦AEGG	422 - 71
D629/4400	♦AEGG	422 -174
D629/4800	♦AEGG	423 - 50
D631N4800T	AEGG	423 - 52
D668N2000	♦AEGG	415 -182
D668N2200	♦AEGG	416 -115
D668N2400	♦AEGG	417 - 50
D668N2600	♦AEGG	418 - 85
D668N2800	♦AEGG	418 -192
D798N400	♦AEGG	312 - 13
D798N800	♦AEGG	312 - 30
D798N1200	♦AEGG	408 -110
D798N1400	♦AEGG	410 -143
D798N1800	♦AEGG	414 - 88
D814A	USSR	181 - 42
D814B	USSR	183 -193
D814D	USSR	192 - 18
D814G	USSR	188 -178
D814V	USSR	186 -134
D815A	USSR	378 -105
D815B	USSR	379 - 40
D815D	USSR	382 -113
D815E	USSR	383 -194
D815G	USSR	381 -105
D815SZ	USSR	385 - 60
D815V	USSR	380 - 79
D816A	USSR	386 -105
D816B	USSR	387 -161
D816D	USSR	391 - 40
D816G	USSR	389 -196
D816V	USSR	388 -186
D817A	USSR	392 - 91
D817B	USSR	393 -102
D817G	USSR	395 -138
D817V	USSR	394 -130
D1800/2000	♦AEGG	415 -125
D1800/2200	♦AEGG	416 -155
D1800/2600	♦AEGG	418 -118
D1800/3000	♦AEGG	420 - 24
D1800N2400	♦AEGG	417 - 82
D1800N2400T	♦AEGG	417 - 96
D1800N2800	♦AEGG	418 -218
D1800N2800T	♦AEGG	419 - 6
D1800N3200	♦AEGG	420 -107
D1800N3200T	♦AEGG	420 -112
D1800N3600	♦AEGG	421 - 55
D1809N2400	♦AEGG	417 - 83
D1809N2800	♦AEGG	418 -219
D1809N3200	♦AEGG	420 -108

TYPE No.	MFRS	Pg&Line
D1809N3600	♦AEGG	421 - 56
D2015L	♦TCE	293 -179
D2020L	♦TCE	295 -208
D2200N2000	♦AEGG	416 - 12
D2200N2200	♦AEGG	416 -148
D2200N2400	♦AEGG	417 - 90
D2200N2600	♦AEGG	418 -115
D2200N2800	♦AEGG	419 - 3
D2209N2000	♦AEGG	416 - 13
D2209N2200	♦AEGG	416 -149
D2209N2400	♦AEGG	417 - 91
D2209N2600	♦AEGG	418 -116
D2209N2800	♦AEGG	419 - 4
D2228N200	♦AEGG	313 - 62
D2228N400	♦AEGG	313 - 64
D2228N600	♦AEGG	313 - 66
D2228N800	♦AEGG	313 - 68
D4015L	♦TCE	293 -183
D4020L	♦TCE	295 -212
D4400N200	♦AEGG	313 -190
D4400N400	♦AEGG	313 -192
D4400N600	♦AEGG	313 -194
D4400N800	♦AEGG	313 -196
D4409N200	♦AEGG	313 -191
D4409N400	♦AEGG	313 -193
D4409N600	♦AEGG	313 -195
D4409N800	♦AEGG	313 -197
D5090	ALP	439 - 17
D5090A	ALP	439 - 16
D6015L	♦TCE	293 -187
D6020L	♦TCE	295 -216
DA1.5/1000	♦AEGG	402 - 83
DA1.5/200	♦AEGG	284 - 26
DA1.5/400	♦AEGG	284 -133
DA1.5/600	♦AEGG	285 - 13
DA1.5/800	♦AEGG	285 - 81
DA3/200	♦AEGG	288 -131
DA3/400	♦AEGG	289 - 8
DA3/600	♦AEGG	289 - 90
DA3/800	♦AEGG	289 -160
DA3/1000	♦AEGG	402 -192
DA6-1100	♦AEGG	405 - 86
DA6-1400	♦AEGG	409 -102
DA6-1600	♦AEGG	412 -100
DA6/1200	♦AEGG	406 -148
DA203X	RHMJ	274 -106
DA203Y	RHMJ	274 - 68
DA204X	RHMJ	274 -107
DA204Y	RHMJ	274 - 69
DA1000	♦LUCB	280 - 38
DA1001	♦LUCB	280 -115
DA1002	♦LUCB	280 -128
DA1006	♦LUCB	281 -122
DA1058	♦LUCB	282 - 96
DA1701	UNI	235 -113
DA1702	UNI	235 -114
DA1703	UNI	235 -115
DA1704	UNI	235 -116
DA-4N	ORIJ	271 - 91
DA-4P	ORIJ	271 - 92
DA-8N	ORIJ	271 - 93
DA-8P	ORIJ	271 - 94
DAC1	SELI	439 -104
DAC2	SELI	439 -105
DAC3	SELI	439 -106
DAG1A1	♦HITJ	323 - 1
DAG1A2	♦HITJ	323 - 2
DAG1A3	♦HITJ	323 - 3
DAG1A4	♦HITJ	323 - 4
DAG1A05	♦HITJ	323 - 5
DAN201	RHMJ	314 - 13
DAN201VA	RHMJ	314 - 14
DAN202	RHMJ	314 - 15
DAN202VA	RHMJ	314 - 16
DAN205	RHMJ	314 - 26
DAN206	RHMJ	314 - 27
DAN401	RHMJ	314 - 7
DAN403	RHMJ	314 - 12
DAN601	RHMJ	314 - 8
DAP201	RHMJ	314 - 17
DAP201VA	RHMJ	314 - 18
DAP202	RHMJ	314 - 19
DAP202VA	RHMJ	314 - 20
DAP401	RHMJ	314 - 9
DAP601	RHMJ	314 - 10
DB1A(A)	♦GESY	360 -121
DB1B(A)	♦GESY	360 -154
DB1D(A)	♦GESY	360 -189
DB1F(A)	♦GESY	360 - 93
DB1M(A)	♦GESY	361 - 12
DB1N(A)	♦GESY	361 - 39
DB1P(A)	♦GESY	361 - 62
DB101	♦DII	360 - 94
DB101G	♦DII	360 - 95
DB102	♦DII	360 -122
DB102G	♦DII	360 -123
DB103	♦DII	360 -155
DB103G	♦DII	360 -156
DB104	♦DII	360 -190
DB104G	♦DII	360 -191
DB105	♦DII	361 - 13
DB105G	♦DII	361 - 14
DB106	♦DII	361 - 40
DB106G	♦DII	361 - 41
DB107	♦DII	361 - 63
DB107G	♦DII	361 - 64
DB600T	♦DIX	366 - 33
DB600W	♦DIX	366 - 34
DB601T	♦DIX	366 - 56
DB601W	♦DIX	366 - 57
DB602T	♦DIX	366 - 82
DB602W	♦DIX	366 - 83
DB604T	♦DIX	366 -111
DB604W	♦DIX	366 -112

TYPE No.	MFRS	Pg&Line
DB606T	♦DIX	366 -139
DB606W	♦DIX	366 -140
DB608T	♦DIX	366 -166
DB608W	♦DIX	366 -167
DB610T	♦DIX	366 -186
DB610W	♦DIX	366 -187
DB800T	♦DIX	366 -210
DB800W	♦DIX	366 -211
DB801T	♦DIX	367 - 7
DB801W	♦DIX	367 - 8
DB802T	♦DIX	367 - 20
DB802W	♦DIX	367 - 21
DB804T	♦DIX	367 - 37
DB804W	♦DIX	367 - 38
DB806T	♦DIX	367 - 53
DB806W	♦DIX	367 - 54
DB808T	♦DIX	367 - 70
DB808W	♦DIX	367 - 71
DB810T	♦DIX	367 - 85
DB810W	♦DIX	367 - 86
DB1200T	♦DIX	368 -105
DB1200W	♦DIX	368 -106
DB1201T	♦DIX	368 -115
DB1201W	♦DIX	368 -116
DB1202T	♦DIX	368 -130
DB1202W	♦DIX	368 -131
DB1204T	♦DIX	368 -150
DB1204W	♦DIX	368 -151
DB1206T	♦DIX	368 -165
DB1206W	♦DIX	368 -166
DB1208T	♦DIX	368 -179
DB1208W	♦DIX	368 -180
DB1210T	♦DIX	368 -185
DB1210W	♦DIX	368 -186
DB1500T	♦DIX	368 -198
DB1500W	♦DIX	368 -199
DB1501T	♦DIX	368 -215
DB1501W	♦DIX	368 -216
DB1502T	♦DIX	369 - 19
DB1502W	♦DIX	369 - 20
DB1504T	♦DIX	369 - 47
DB1504W	♦DIX	369 - 48
DB1506T	♦DIX	369 - 71
DB1506W	♦DIX	369 - 72
DB1508T	♦DIX	369 - 94
DB1508W	♦DIX	369 - 95
DB1510T	♦DIX	369 -108
DB1510W	♦DIX	369 -109
DB2500T	♦DIX	369 -178
DB2500W	♦DIX	369 -179
DB2501T	♦DIX	369 -201
DB2501W	♦DIX	369 -202
DB2502T	♦DIX	370 - 12
DB2502W	♦DIX	370 - 13
DB2504T	♦DIX	370 - 49
DB2504W	♦DIX	370 - 50
DB2506T	♦DIX	370 - 84
DB2506W	♦DIX	370 - 85
DB2508T	♦DIX	370 -109
DB2508W	♦DIX	370 -110
DB2510T	♦DIX	370 -126
DB2510W	♦DIX	370 -127
DB3500T	♦DIX	371 - 14
DB3500W	♦DIX	371 - 15
DB3501T	♦DIX	371 - 33
DB3501W	♦DIX	371 - 34
DB3502T	♦DIX	371 - 53
DB3502W	♦DIX	371 - 54
DB3504T	♦DIX	371 - 70
DB3504W	♦DIX	371 - 71
DB3506T	♦DIX	371 - 86
DB3506W	♦DIX	371 - 87
DB3508T	♦DIX	371 -102
DB3508W	♦DIX	371 -103
DB3510T	♦DIX	371 -114
DB3510W	♦DIX	371 -115
DBA10B	♦TSAJ	360 -136
DBA10C	♦TSAJ	360 -171
DBA10E	♦TSAJ	360 -206
DBA10G	♦TSAJ	361 - 27
DBA20B	♦TSAJ	362 -204
DBA20C	♦TSAJ	363 - 36
DBA20E	♦TSAJ	363 - 84
DBA30B	♦TSAJ	362 -205
DBA30C	♦TSAJ	363 - 37
DBA30E	♦TSAJ	363 - 85
DBA30G	♦TSAJ	363 -131
DBA40B	♦TSAJ	287 -134
DBA40C	♦TSAJ	287 -137
DBA40E	♦TSAJ	364 - 55
DBA60B	♦TSAJ	289 -179
DBA60C	♦TSAJ	289 -185
DBA60E	♦TSAJ	289 -194
DBA100B	♦TSAJ	290 - 6
DBA100C	♦TSAJ	290 - 7
DBA100E	♦TSAJ	290 - 8
DBB10B	TSAJ	360 -116
DBB10C	TSAJ	360 -149
DBB10E	TSAJ	360 -184
DBB10G	TSAJ	361 - 7
DBC1	SELI	439 -107
DBC2	SELI	439 -108
DBC3	SELI	439 -109
DBC4	SELI	439 -110
DBC5	SELI	440 - 1
DBC6	SELI	440 - 2
DBC7	SELI	440 - 3
DBC8	SELI	440 - 4
DBC9	SELI	440 - 5
DCA015	TSAJ	246 -144
DCA25B	♦TSAJ	287 - 16
DCA25C	♦TSAJ	287 - 36
DCA25E	♦TSAJ	287 - 64
DCB015	TSAJ	246 -137

TYPE No.	MFRS	Pg&Line
DCB25B	♦TSAJ	287 - 17
DCB25C	♦TSAJ	287 - 37
DCB25E	♦TSAJ	287 - 65
DCD015	TSAJ	246 -163
DCE015	TSAJ	246 -162
DD0.22/80X41	AEGG	433 -117
DD10	♦CODI	401 - 11
DD10A	♦CODI	232 -157
DD15	♦CODI	410 -204
DD20	♦CODI	414 -180
DD20A	♦CODI	232 -158
DD22S800	AEGG	300 -174
DD22S1000	AEGG	403 -166
DD22S1200	AEGG	407 - 9
DD22S1400	AEGG	409 -137
DD25	♦CODI	417 -104
DD30	♦CODI	419 - 47
DD30A	♦CODI	232 -159
DD31N400	♦AEGG	301 - 71
DD31N800	♦AEGG	301 - 75
DD31N1200	♦AEGG	407 - 25
DD31N1400	♦AEGG	409 -150
DD31S800	AEGG	301 - 72
DD31S1000	AEGG	403 -172
DD31S1200	AEGG	407 - 22
DD31S1400	AEGG	409 -147
DD35	♦CODI	420 -172
DD40	♦CODI	421 -131
DD40A	♦CODI	232 -160
DD65N400	♦AEGG	305 - 27
DD65N800	♦AEGG	305 - 28
DD65N1200	♦AEGG	407 -105
DD65N1400	♦AEGG	409 -195
DD65N1600	♦AEGG	412 -182
DD85N400	♦AEGG	305 -129
DD85N800	♦AEGG	305 -134
DD85N1200	♦AEGG	407 -112
DD85N1400	♦AEGG	409 -203
DD85N1600	♦AEGG	412 -188
DD710	LUCB	300 -200
DD711	LUCB	300 -211
DD713	LUCB	301 - 6
DD716	LUCB	301 - 21
DD810A(A)	LUCB	302 -125
DD811A(A)	LUCB	302 -140
DD813A(A)	LUCB	302 -170
DD816A(A)	LUCB	302 -205
DD1000	♦LUCB	280 - 35
DD1001	♦LUCB	280 -116
DD1003	♦LUCB	280 -219
DD1006	♦LUCB	281 -123
DD1056	♦LUCB	281 -124
DD1057	LUCB	237 - 54
DD1058	♦LUCB	282 - 97
DD2520	♦LUCB	280 - 33
DD2520A	♦LUCB	280 - 34
DD2573	♦LUCB	280 -217
DD2573A	♦LUCB	280 -218
DD3520	♦LUCB	285 -210
DD3520A	♦LUCB	285 -211
DD3573	♦LUCB	286 - 48
DD3573A	♦LUCB	286 - 49
DD5620H	♦LUCB	297 - 66
DD5620S	♦LUCB	297 - 67
DD5620V	♦LUCB	297 - 68
DD5621H	♦LUCB	297 - 71
DD5621S	♦LUCB	297 - 72
DD5621V	♦LUCB	297 - 73
DD5623H	♦LUCB	297 - 76
DD5623S	♦LUCB	297 - 77
DD5623V	♦LUCB	297 - 78
DD5626H	♦LUCB	297 - 82
DD5626S	♦LUCB	297 - 83
DD5626V	♦LUCB	297 - 84
DD6120H	♦LUCB	298 -117
DD6120S	♦LUCB	298 -118
DD6120V	♦LUCB	298 -119
DD6121H	♦LUCB	298 -151
DD6121S	♦LUCB	298 -152
DD6121V	♦LUCB	298 -153
DD6123H	♦LUCB	298 -211
DD6123S	♦LUCB	298 -212
DD6123V	♦LUCB	298 -213
DD6126H	♦LUCB	299 - 64
DD6126S	♦LUCB	299 - 65
DD6126V	♦LUCB	299 - 66
DD6202	♦LUCB	298 - 96
DD6205	♦LUCB	298 -131
DD6210	♦LUCB	298 -170
DD6220	♦LUCB	299 - 23
DD6230	♦LUCB	299 - 78
DD6240	♦LUCB	299 -134
DD6520(A)	LUCB	297 - 64
DD6521(A)	LUCB	237 -103
DD6523(A)	LUCB	297 - 75
DD6526(A)	LUCB	297 - 81
DD6620(A)	LUCB	298 -106
DD6621(A)	LUCB	237 -104
DD6623(A)	LUCB	298 -177
DD6626(A)	LUCB	299 - 32
DD6720(A)	LUCB	300 - 5
DD6721(A)	LUCB	237 -106
DD6723(A)	LUCB	300 - 76
DD6726(A)	LUCB	237 -107
DD6802	LUCB	298 - 97
DD6805	LUCB	298 -132
DD6810	LUCB	298 -171
DD6820	LUCB	299 - 24
DD6830	LUCB	299 - 79
DD6840	LUCB	299 -135
DE100	♦DIO	435 - 63
DE104	UNI	234 - 27
DE110	UNI	234 - 23
DE111	UNI	234 - 24

1. TYPE No. CROSS INDEX

IN TYPE NUMBER SEQUENCE

TYPE No.	MFRS	Pg&Line
DE112	UNI	234 - 36
DE113	UNI	234 - 37
DE114	UNI	234 - 25
DE115	UNI	234 - 26
DE3101/2	♦DIO	258 - 10
DE3101/5	♦DIO	258 - 11
DF01	♦FEC	360 -124
DF01M	♦GIC	360 -125
DF02	♦FEC	360 -157
DF02M	♦GIC	360 -158
DF04	♦FEC	360 -192
DF04M	♦GIC	360 -193
DF005	♦FEC	360 - 96
DF005M	♦GIC	360 - 97
DF06	♦FEC	361 - 15
DF06M	♦GIC	361 - 16
DF08	♦FEC	361 - 42
DF08M	♦GIC	361 - 43
DF10	♦CODI	248 -143
DF10#B	♦FEC	361 - 65
DF15	♦CODI	248 -152
DF20	♦CODI	248 -163
DF25	♦CODI	248 -167
DF30	♦CODI	248 -172
DF35	♦CODI	248 -175
DF40	♦CODI	248 -178
DF100	♦DIO	435 - 64
DF252-02	♦THEF	310 - 20
DF252-04	♦THEF	310 - 21
DF252-06	♦THEF	310 - 22
DF252-08	♦THEF	310 - 23
DF252-10	♦THEF	404 -155
DF252-12	♦THEF	408 - 32
DF252-14	♦THEF	410 - 72
DF451-01	♦THEF	309 -105
DF451-02	♦THEF	309 -129
DF451-04	♦THEF	309 -165
DF451-06	♦THEF	309 -198
DF451-08	♦THEF	310 - 3
DF451-10	♦THEF	404 -150
DF451-12	♦THEF	408 - 25
DF451-14	♦THEF	410 - 66
DF452-02	♦THEF	310 -210
DF452-04	♦THEF	311 - 11
DF452-06	♦THEF	311 - 33
DF452-08	♦THEF	311 - 54
DF452-10	♦THEF	404 -192
DF452-12	♦THEF	408 - 72
DF452-14	♦THEF	410 -105
DF452-15	♦THEF	411 -198
DF652-02	♦THEF	311 -171
DF652-04	♦THEF	311 -176
DF652-06	♦THEF	311 -181
DF652-08	♦THEF	311 -185
DF652-10	♦THEF	404 -214
DF652-12	♦THEF	408 - 98
DF652-14	♦THEF	410 -132
DF652-16	♦THEF	413 - 76
DF652-18	♦THEF	414 - 82
DF652-20	♦THEF	415 -180
DF652-22	♦THEF	416 -113
DF652-24	♦THEF	417 - 46
DF652-25	♦THEF	418 - 10
DF752-02	♦THEF	312 - 8
DF752-04	♦THEF	312 - 16
DF752-06	♦THEF	312 - 23
DF752-08	♦THEF	312 - 34
DF752-11	♦THEF	405 -158
DF752-12	♦THEF	408 -116
DF752-14	♦THEF	410 -148
DF752-16	♦THEF	413 - 94
DF752-18	♦THEF	414 - 94
DF752-20	♦THEF	415 -194
DFA05B	♦TSAJ	276 -152
DFA05C	♦TSAJ	276 -177
DFA05E	♦TSAJ	276 -216
DFA05G	♦TSAJ	277 - 38
DFB03R	TSAJ	411 - 28
DFB03T	TSAJ	413 -144
DFB03W	TSAJ	415 - 13
DFB05B	♦TSAJ	276 -160
DFB05C	♦TSAJ	276 -183
DFB05E	♦TSAJ	277 - 2
DFB05G	♦TSAJ	277 - 43
DFC05J	♦TSAJ	277 - 61
DFC05L	♦TSAJ	401 - 89
DFC05N	♦TSAJ	405 -218
DFC05R	♦TSAJ	411 - 42
DFC10E	♦TSAJ	281 - 68
DFC10G	♦TSAJ	281 -184
DFD05B	♦TSAJ	276 -153
DFD05C	♦TSAJ	276 -178
DFD05E	♦TSAJ	276 -217
DFD05G	♦TSAJ	277 - 39
DFF20B10	♦HITJ	263 -122
DFF20B12	♦HITJ	263 -123
DFF50B10	♦HITJ	263 -204
DFF50B12	♦HITJ	263 -205
DFH10B	♦TSAJ	280 - 43
DFH10C	♦TSAJ	280 -131
DFH10E	♦TSAJ	281 - 34
DFH10G	♦TSAJ	281 -154
DFH10J	♦TSAJ	282 - 28
DFP027	♦LUCB	342 -104
DFP068	♦LUCB	342 -105
DFP140	♦LUCB	342 -106
DFP180	♦LUCB	342 -107
DFP240	♦LUCB	342 -108
DFS80A8	♦HITJ	305 - 57
DFS80A10	♦HITJ	404 - 30
DFS80A13	♦HITJ	408 -214
DFS80A15	♦HITJ	411 -139
DFS250A8	♦HITJ	309 -210
DFS250A10	♦HITJ	404 -141

TYPE No.	MFRS	Pg&Line
DFS250A13	♦HITJ	409 - 13
DFS250A15	♦HITJ	411 -178
DG1	♦GIC	256 - 98
DG2	♦GIC	256 -103
DG3	♦GIC	256 -104
DHA16	♦TSAJ	429 -171
DHA20	♦TSAJ	430 - 97
DHB08	♦TSAJ	232 -111
DHB10	♦TSAJ	427 - 5
DHB12	♦TSAJ	428 - 28
DHB14	TSAJ	428 -181
DHB16	TSAJ	429 -172
DHB18	TSAJ	430 - 35
DHG3A120	♦HITJ	237 - 68
DHG3B140	♦HITJ	237 - 69
DHG3C160	♦HITJ	237 - 70
DHG3D200	♦HITJ	237 - 71
DHG3E250	♦HITJ	237 - 72
DHG3G80	♦HITJ	237 - 67
DI914-1B	♦DIO	435 - 65
DI914-1Q	♦DIO	435 - 66
DI914-1QM	♦DIO	435 - 67
DI914-2B	♦DIO	435 - 68
DI914-2Q	♦DIO	435 - 69
DI914-2QM	♦DIO	435 - 70
DI914-3B	♦DIO	435 - 71
DI914-3Q	♦DIO	435 - 72
DI914-3QM	♦DIO	435 - 73
DIB10	MEHK	361 - 58
DL201	SDI	358 - 68
DL202	SDI	358 - 69
DL203	SDI	358 - 70
DL204	SDI	358 - 71
DL401	SDI	358 - 72
DL402	SDI	358 - 73
DL403	SDI	358 - 74
DL404	SDI	358 - 75
DL601	SDI	358 - 76
DL602	SDI	358 - 77
DL603	SDI	358 - 78
DL604	SDI	358 - 79
DL801	SDI	358 - 80
DL802	SDI	358 - 81
DL803	SDI	358 - 82
DL804	SDI	358 - 83
DN262-02	♦THEF	310 -154
DN262-04	♦THEF	310 -155
DN262-06	♦THEF	310 -156
DN262-08	♦THEF	310 -157
DN262-10	♦THEF	404 -173
DN262-12	♦THEF	408 - 53
DN262-14	♦THEF	410 - 86
DN262-16	♦THEF	413 - 48
DN262-18	♦THEF	414 - 54
DN262-20	♦THEF	415 -154
DN462-02	♦THEF	311 -139
DN462-04	♦THEF	311 -140
DN462-06	♦THEF	311 -141
DN462-08	♦THEF	311 -142
DN462-10	♦THEF	404 -207
DN462-12	♦THEF	408 - 90
DN462-14	♦THEF	410 -126
DN462-16	♦THEF	413 - 70
DN462-18	♦THEF	414 - 74
DN462-20	♦THEF	415 -173
DN662-02	♦THEF	312 - 9
DN662-04	♦THEF	312 - 17
DN662-06	♦THEF	312 - 24
DN662-08	♦THEF	312 - 35
DN662-10	♦THEF	405 - 6
DN662-12	♦THEF	408 -117
DN662-14	♦THEF	410 -149
DN662-16	♦THEF	413 - 95
DN662-18	♦THEF	414 - 95
DN662-20	♦THEF	415 -196
DN662-22	♦THEF	416 -123
DN662-24	♦THEF	417 - 57
DN662-25	♦THEF	418 - 21
DN761-20	♦THEF	415 -195
DN761-22	♦THEF	416 -122
DN761-24	♦THEF	417 - 56
DN761-26	♦THEF	418 - 90
DN761-28	♦THEF	418 -200
DN761-30	♦THEF	419 -220
DN761-32	♦THEF	420 - 91
DN761-34	♦THEF	420 -154
DN762-02	♦THEF	312 -121
DN762-04	♦THEF	312 -122
DN762-06	♦THEF	312 -123
DN762-08	♦THEF	312 -124
DN762-10	♦THEF	405 - 21
DN762-12	♦THEF	408 -136
DN762-14	♦THEF	410 -166
DN762-16	♦THEF	413 -109
DN762-18	♦THEF	414 -105
DN762-20	♦THEF	415 -206
DN961-02	♦THEF	313 - 24
DN961-04	♦THEF	313 - 25
DN961-06	♦THEF	313 - 26
DN961-08	♦THEF	313 - 27
DN961-10	♦THEF	405 - 41
DN961-12	♦THEF	408 -156
DN961-14	♦THEF	410 -188
DN961-16	♦THEF	413 -127
DN961-18	♦THEF	414 -122
DN961-20	♦THEF	416 - 7
DN961-22	♦THEF	416 -141
DN961-24	♦THEF	417 - 84
DN961-25	♦THEF	418 - 45
DR50	BELI	275 - 46
DR128	HSE	231 -173
	STI	
DR150	♦BELI	417 -120
DR207	HSE	233 -204

TYPE No.	MFRS	Pg&Line
DR209	HSE	233 -208
	STI	
DR213	HSE	234 - 63
DR272	HSE	234 -189
DR283	HSE	231 -174
	STI	
DR291	HSE	231 -175
DR292	HSE	231 -176
DR295	HSE	249 - 57
	STI	
DR300	♦BELI	250 -176
	♦EDI	
DR301	♦BELI	250 -129
	HSE	STI
DR302	HSE	234 -190
DR303	HSE	234 -191
DR304	HSE	234 -170
DR305	HSE	234 -171
DR306	HSE	234 -172
DR307	HSE	234 -173
DR308	HSE	234 -174
DR309	HSE	234 -192
	STI	
DR310	HSE	234 - 64
	STI	
DR311	HSE	231 -216
DR312	HSE	234 - 65
DR313	HSE	234 - 66
DR314	HSE	234 - 67
DR315	HSE	231 -177
DR316	HSE	231 -178
DR317	HSE	231 -179
DR318	HSE	231 -180
DR319	HSE	231 -181
DR321	HSE	234 -175
DR323	HSE	234 - 68
DR324	HSE	234 - 69
DR325	HSE	234 - 70
DR326	HSE	234 - 71
DR327	HSE	234 -184
	STI	
DR328	HSE	234 -185
DR329	HSE	234 -186
DR330	HSE	234 -187
	STI	
DR336	HSE	231 -168
DR337	HSE	231 -169
DR338	HSE	231 -170
DR351	HSE	234 -176
	STI	
DR352	HSE	234 - 90
DR365	HSE	231 -128
DR366	HSE	231 -182
	STI	
DR379	STI	234 -177
DR385	HSE	234 - 91
	STI	
DR389	HSE	234 -178
DR400	♦EDI	241 -193
DR401	STI	249 - 56
DR418	STI	248 -110
DR426	STI	232 - 53
DR435	HSE	234 - 92
	STI	
DR450	♦BELI	275 -138
DR463	HSE	234 -188
DR464	HSE	233 - 24
DR482	STI	249 - 3
DR521	STI	243 - 65
DR600	♦EDI	242 - 6
DR668	STI	232 - 28
DR670	STI	232 - 29
DR694	STI	249 -134
DR699	STI	234 -118
DR700	♦EDI	242 - 19
DR800	♦EDI	242 - 30
DR826	STI	232 - 16
DR833	STI	243 - 89
DR852	STI	242 -186
DR900	♦EDI	242 - 36
DR1000	♦EDI	242 - 58
DR1200	♦EDI	242 - 78
DRA402	♦THEF	301 -132
DRA404	♦THEF	301 -179
DRA406	♦THEF	301 -212
DRA408	♦THEF	302 - 23
DRA410	♦THEF	403 -176
DRB100-02R	♦THEF	306 - 9
DRB100-04R	♦THEF	306 - 71
DRB100-06R	♦THEF	306 -124
DRB100-08R	♦THEF	306 -176
DRB100-10R	♦THEF	404 - 80
DRB100-12R	♦THEF	407 -167
DRBT100-02R	♦THEF	306 - 10
DRBT100-04R	♦THEF	306 - 72
DRBT100-06R	♦THEF	306 -125
DRBT100-08R	♦THEF	306 -177
DRBT100-10R	♦THEF	404 - 81
DRBT100-12R	♦THEF	407 -168
DRX10	♦BELI	412 - 14
DS0.9-04A	♦BBCG	282 -195
DS0.9-08A	BBCG	283 - 16
DS0.9-12A	BBCG	406 - 71
DS0.9-14A	♦BBCG	409 - 74
DS0.9-16A	♦BBCG	412 - 52
DS1.2-04A	♦BBCG	285 -178
DS1.2-08A	BBCG	285 -182
DS1.2-12A	BBCG	406 - 96
DS1.2-14A	♦BBCG	409 - 81
DS1.2-16A	♦BBCG	412 - 63
DS2-04A	♦BBCG	285 -185
DS2-08A	BBCG	285 -186
DS2-12A	BBCG	406 - 98
DS2-14A	♦BBCG	409 - 83

TYPE No.	MFRS	Pg&Line
DS2-16A	♦BBCG	412 - 65
DS5	♦BELI	342 -109
DS6-04F	BBCG	294 -102
DS6-08F	BBCG	294 -153
DS6-12F	BBCG	406 -172
DS6-14F	BBCG	409 -110
DS6-16F	BBCG	412 -105
DS9-04F	BBCG	294 -161
DS9-08F	BBCG	294 -162
DS9-12F	BBCG	406 -174
DS9-14F	BBCG	409 -112
DS9-16F	BBCG	412 -107
DS17-02A	♦BBCG	298 -178
DS17-04A	♦BBCG	299 - 33
DS17-06A	BBCG	299 -124
DS17-08A	BBCG	299 -166
DS17-12A	BBCG	406 -219
DS17-14A	♦BBCG	409 -129
DS17-16A	♦BBCG	412 -121
DS18	♦TSAJ	276 -157
DS19	♦TSAJ	276 -158
DS19C	♦HITJ	297 -139
DS19E	♦HITJ	297 -166
DS19G	♦HITJ	297 -198
DS19J	♦HITJ	297 -217
DS20C	♦HITJ	297 -140
DS20E	♦HITJ	297 -167
DS20G	♦HITJ	297 -199
DS20J	♦HITJ	297 -218
DS22-04A	♦BBCG	302 - 49
DS22-08A	BBCG	302 - 47
DS22-12A	BBCG	407 - 42
DS22-14A	♦BBCG	409 -157
DS22-16A	♦BBCG	412 -147
DS35-02A	♦BBCG	303 - 32
DS35-04A	♦BBCG	303 - 33
DS35-08A	BBCG	303 - 31
DS35-12A	BBCG	407 - 57
DS35-14A	♦BBCG	409 -167
DS35-16A	♦BBCG	412 -155
DS42-04A	♦BBCG	304 - 4
DS42-08A	BBCG	304 - 8
DS42-12A	BBCG	407 - 78
DS42-14A	♦BBCG	409 -182
DS42-16A	♦BBCG	412 -169
DS75-02B	♦BBCG	305 -159
DS75-04B	♦BBCG	305 -161
DS75-06B	BBCG	306 -111
DS75-08B	BBCG	306 -164
DS75-12B	BBCG	407 - 70
DS75-14B	♦BBCG	409 -189
DS75-16B	♦BBCG	412 -175
DS80-04A	♦BBCG	306 -191
DS80-08A	BBCG	306 -192
DS80-12A	BBCG	407 -170
DS80-14A	♦BBCG	410 - 18
DS80-16A	♦BBCG	412 -219
DS110-04A	♦BBCG	308 - 92
DS110-08A	BBCG	308 -113
DS110-12A	BBCG	407 -206
DS110-14A	♦BBCG	410 - 37
DS110-16A	♦BBCG	413 - 10
DS130T	♦TSAJ	282 - 66
DS132	♦TSAJ	279 -186
DS133	♦TSAJ	279 -187
DS135	♦TSAJ	281 -201
DS150A	TSAJ	283 -191
DS150B	TSAJ	284 - 79
DS150C	TSAJ	284 -181
DS170-18L	♦BBCG	414 - 29
DS170-20L	♦BBCG	415 -140
DS170-25L	♦BBCG	417 -205
DS175-02L	♦BBCG	308 -145
DS175-04L	♦BBCG	308 -146
DS175-06L	♦BBCG	308 -147
DS175-08L	♦BBCG	308 -148
DS175-10L	♦BBCG	404 -116
DS175-12L	♦BBCG	407 -211
DS175-14L	♦BBCG	410 - 42
DS175-16L	♦BBCG	413 - 14
DS240-02A	♦BBCG	309 - 53
DS240-04A	♦BBCG	309 - 64
DS240-06A	♦BBCG	309 - 74
DS240-07A	♦BBCG	309 - 77
DS290-08J	♦BBCG	310 - 41
DS290-12J	♦BBCG	408 - 34
DS290-14J	♦BBCG	410 - 74
DS290-16J	♦BBCG	413 - 35
DS390-04	♦BBCG	310 -189
DS390-04J	♦BBCG	311 - 77
DS390-06J	♦BBCG	310 -170
DS390-08J	♦BBCG	310 -177
DS402ST01	♦AEIL	311 -100
DS402ST02	♦AEIL	311 -104
DS402ST04	♦AEIL	311 -110
DS402ST05	♦AEIL	311 -114
DS402ST06	♦AEIL	311 -117
DS402ST07	♦AEIL	311 -128
DS402ST08	♦AEIL	311 -129
DS402ST09	♦AEIL	311 -138
DS402ST10	♦AEIL	404 -195
DS402ST11	♦AEIL	405 -147
DS402ST12	♦AEIL	408 - 80
DS412SE40	♦AEIL	422 - 56
DS412SE41	♦AEIL	422 - 87
DS412SE42	♦AEIL	422 -116
DS412SE43	♦AEIL	422 -133
DS412SE44	♦AEIL	422 -159
DS430-04J	BBCG	311 - 66
DS430-06J	BBCG	311 - 69
DS430-08J	BBCG	311 - 73
DS430-10J	BBCG	404 -193
DS430-12J	BBCG	408 - 75
DS430-14J	BBCG	410 -109

TYPE No.	MFRS	Pg&Line
DS430-16J	BBCG	413 - 61
DS442	♦TSAJ	232 -194
DS442X	♦TSAJ	234 -197
DS446	♦TSAJ	235 -117
DS448	♦TSAJ	244 -190
DS804SE07	♦AEIL	312 -108
DS804SE08	♦AEIL	312 -112
DS804SE09	♦AEIL	312 -117
DS804SE10	♦AEIL	405 - 16
DS804SE11	♦AEIL	405 -165
DS804SE12	♦AEIL	408 -129
DS804SE13	♦AEIL	409 - 34
DS804SE14	♦AEIL	410 -160
DS804SE15	♦AEIL	411 -211
DS804SE16	♦AEIL	413 -105
DS804SE17	♦AEIL	413 -170
DS804SE18	♦AEIL	414 -101
DS804SE19	♦AEIL	414 -152
DS804SE20	♦AEIL	415 -201
DS804SE21	♦AEIL	416 - 43
DS904SM10	AEIL	405 - 22
DS904SM11	AEIL	405 -169
DS904SM12	AEIL	408 -137
DS904SM13	♦AEIL	409 - 37
DS904SM14	♦AEIL	410 -167
DS904SM15	♦AEIL	411 -214
DS904SM16	♦AEIL	413 -110
DS904SM17	♦AEIL	413 -172
DS904SM18	♦AEIL	414 -106
DS904SM19	♦AEIL	414 -154
DS904SM20	♦AEIL	415 -207
DS904SM21	♦AEIL	416 - 47
DS904SM22	♦AEIL	416 -129
DS904SM23	♦AEIL	416 -184
DS904SM24	♦AEIL	417 - 67
DS904SM25	♦AEIL	418 - 30
DS904SM26	♦AEIL	418 - 98
DS904SM27	♦AEIL	418 -137
DS904SM28	♦AEIL	418 -206
DS904SM29	♦AEIL	419 - 28
DS912SM25	♦AEIL	418 - 4
DS912SM26	♦AEIL	418 - 79
DS912SM27	♦AEIL	418 -125
DS912SM28	♦AEIL	418 -186
DS912SM29	♦AEIL	419 - 17
DS912SM30	♦AEIL	419 -205
DS912SM31	♦AEIL	420 - 35
DS912SM32	♦AEIL	420 - 87
DS912SM33	♦AEIL	420 -120
DS912SM34	♦AEIL	420 -153
DS912SM35	♦AEIL	420 -205
DS912SM36	♦AEIL	421 - 38
DS912SM37	♦AEIL	421 - 65
DS912SM38	♦AEIL	421 - 99
DS912SM39	♦AEIL	421 -115
DS912SM40	♦AEIL	422 - 68
DS912SM41	♦AEIL	422 - 93
DS912SM42	♦AEIL	422 -124
DS912SM43	♦AEIL	422 -139
DS912SM44	♦AEIL	422 -171
DS912SM45	♦AEIL	422 -216
DS912SM46	♦AEIL	423 - 14
DS912SM47	♦AEIL	423 - 18
DS912SM48	♦AEIL	423 - 47
DS912SM49	♦AEIL	423 - 56
DS912SM50	♦AEIL	424 - 65
DS912SM51	♦AEIL	424 - 72
DS912SM52	♦AEIL	424 - 77
DS912SM53	♦AEIL	424 - 82
DS912SM54	♦AEIL	424 - 87
DS912SM55	♦AEIL	424 -110
DS912SM56	♦AEIL	424 -116
DS1101SM01	♦AEIL	313 - 31
DS1101SM02	♦AEIL	313 - 33
DS1101SM03	♦AEIL	313 - 35
DS1101SM04	♦AEIL	313 - 38
DS1101SM05	♦AEIL	313 - 40
DS1101SM06	♦AEIL	313 - 42
DS1101SM07	♦AEIL	313 - 45
DS1101SM08	♦AEIL	313 - 47
DS1101SM09	♦AEIL	313 - 50
DS1101SM10	♦AEIL	405 - 42
DS1101SM11	♦AEIL	405 -183
DS1101SM12	♦AEIL	408 -160
DS1104SM10	♦AEIL	405 - 35
DS1104SM11	♦AEIL	405 -178
DS1104SM12	♦AEIL	408 -149
DS1104SM13	♦AEIL	409 - 45
DS1104SM14	♦AEIL	410 -181
DS1104SM15	♦AEIL	412 - 2
DS1104SM16	♦AEIL	413 -119
DS1104SM17	♦AEIL	413 -181
DS1104SM18	♦AEIL	414 -115
DS1104SM19	♦AEIL	414 -160
DS1104SM20	♦AEIL	415 -218
DS1104SM21	♦AEIL	416 - 54
DS1104SM22	♦AEIL	416 -137
DS1104SM23	♦AEIL	416 -191
DS1104SM24	♦AEIL	417 - 77
DS1104SM25	♦AEIL	418 - 38
DS1104SM26	♦AEIL	418 -109
DS1104SM27	♦AEIL	418 -144
DS1104SM28	♦AEIL	418 -215
DS1104SM29	♦AEIL	419 - 36
DS1107SM24	♦AEIL	417 - 63
DS1107SM25	♦AEIL	418 - 27
DS1107SM26	♦AEIL	418 - 94
DS1107SM27	♦AEIL	418 -134
DS1107SM28	♦AEIL	418 -202
DS1107SM29	♦AEIL	419 - 25
DS1107SM30	♦AEIL	420 - 6
DS1107SM31	♦AEIL	420 - 41
DS1107SM32	♦AEIL	420 - 98
DS1107SM33	♦AEIL	420 -124

Δ-Registered with JEDEC by this manufacturer

♦-Mfr's data sheet available in microfilm service

1. TYPE No. CROSS INDEX

IN TYPE NUMBER SEQUENCE

TYPE No.	MFRS	Pg&Line
DS1107SM34	♦AEIL	420 -158
DS1107SM35	♦AEIL	420 -209
DS1107SM36	♦AEIL	421 - 47
DS1109SM30	♦AEIL	420 - 4
DS1109SM31	♦AEIL	420 - 40
DS1109SM32	♦AEIL	420 - 95
DS1109SM33	♦AEIL	420 -123
DS1109SM34	♦AEIL	420 -157
DS1109SM35	♦AEIL	420 -208
DS1109SM36	♦AEIL	421 - 45
DS1109SM37	♦AEIL	421 - 68
DS1109SM38	♦AEIL	421 -104
DS1109SM39	♦AEIL	421 -118
DS1109SM40	♦AEIL	422 - 76
DS1109SM41	♦AEIL	422 - 96
DS1109SM42	♦AEIL	422 -127
DS1109SM43	♦AEIL	422 -142
DS1109SM44	♦AEIL	422 -179
DS1112SM47-18	♦AEIL	423 - 19
DS1112SM48-18	♦AEIL	423 - 51
DS1112SM49-18	♦AEIL	423 - 57
DS1112SM50-18	♦AEIL	424 - 67
DS1112SM51-18	♦AEIL	424 - 73
DS1112SM52-18	♦AEIL	424 - 78
DS1112SM53-18	♦AEIL	424 - 83
DS1112SM54-18	♦AEIL	424 - 88
DS1112SM55-18	♦AEIL	424 -111
DS1112SM56-18	♦AEIL	424 -117
DS2002SN01	♦AEIL	313 - 94
DS2002SN02	♦AEIL	313 - 95
DS2002SN03	♦AEIL	313 - 96
DS2002SN04	♦AEIL	313 - 97
DS2002SN05	♦AEIL	313 - 98
DS2002SN06	♦AEIL	313 - 99
DS2002SN07	♦AEIL	313 -100
DS2002SN08	♦AEIL	313 -101
DS2002SN09	♦AEIL	313 -102
DS2002SN10	♦AEIL	405 - 52
DS2002SN11	♦AEIL	405 -187
DS2002SN12	♦AEIL	408 -168
DS2002SN13	♦AEIL	409 - 52
DS2002SN14	♦AEIL	410 -196
DS2002SN15	♦AEIL	412 - 9
DS2004SN10	♦AEIL	405 - 43
DS2004SN11	♦AEIL	405 -180
DS2004SN12	♦AEIL	408 -157
DS2004SN13	♦AEIL	409 - 48
DS2004SN14	♦AEIL	410 -189
DS2004SN15	♦AEIL	412 - 4
DS2004SN16	♦AEIL	413 -128
DS2004SN17	♦AEIL	413 -184
DS2004SN18	♦AEIL	414 -123
DS2004SN19	♦AEIL	414 -162
DS2004SN20	♦AEIL	416 - 8
DS2004SN21	♦AEIL	416 - 58
DS2004SN22	♦AEIL	416 -143
DS2004SN23	♦AEIL	416 -194
DS2004SN24	♦AEIL	417 - 86
DS2007SN24	♦AEIL	417 - 79
DS2007SN25	♦AEIL	418 - 44
DS2007SN26	♦AEIL	418 -110
DS2007SN27	♦AEIL	418 -145
DS2007SN28	♦AEIL	418 -216
DS2007SN29	♦AEIL	419 - 37
DS2007SN30	♦AEIL	420 - 18
DS2007SN31	♦AEIL	420 - 47
DS2007SN32	♦AEIL	420 -105
DS2007SN33	♦AEIL	420 -130
DS2007SN34	♦AEIL	420 -164
DS2007SN35	♦AEIL	420 -217
DS2007SN36	♦AEIL	421 - 53
DS2007SN37	♦AEIL	421 - 72
DS2007SN38	♦AEIL	421 -108
DS2007SN39	♦AEIL	421 -122
DS2007SN40	♦AEIL	422 - 82
DS2009SN30	♦AEIL	420 - 12
DS2009SN31	♦AEIL	420 - 44
DS2009SN32	♦AEIL	420 -102
DS2009SN33	♦AEIL	420 -127
DS2009SN34	♦AEIL	420 -161
DS2009SN35	♦AEIL	420 -212
DS2009SN36	♦AEIL	421 - 50
DS2009SN37	♦AEIL	421 - 69
DS2009SN38	♦AEIL	421 -105
DS2009SN39	♦AEIL	421 -119
DS2009SN40	♦AEIL	422 - 77
DS2009SN41	♦AEIL	422 - 97
DS2009SN42	♦AEIL	422 -128
DS2009SN43	♦AEIL	422 -143
DS2009SN44	♦AEIL	422 -180
DS2106SU20	♦AEIL	416 - 24
DS2106SU21	♦AEIL	416 - 65
DS2106SU22	♦AEIL	416 -157
DS2106SU23	♦AEIL	416 -200
DS2106SU24	♦AEIL	417 - 98
DS2106SU25	♦AEIL	418 - 51
DS2106SU26	♦AEIL	418 -119
DS2106SU27	♦AEIL	418 -148
DS2106SU28	♦AEIL	419 - 7
DS2106SU29	♦AEIL	419 - 40
DS2106SU30	♦AEIL	420 - 26
DS2106SU31	♦AEIL	420 - 48
DS2106SU32	♦AEIL	420 -113
DS2106SU33	♦AEIL	420 -131

TYPE No.	MFRS	Pg&Line
DS2106SU34	♦AEIL	420 -169
DS2106SU35	♦AEIL	420 -218
DS2106SU36	♦AEIL	421 - 60
DS8656N	NSC	315 - 44
DSA0.9-12A	BBCG	406 - 72
DSA0.9-14A	♦BBCG	409 - 75
DSA0.9-16A	♦BBCG	412 - 53
DSA1.2-12A	BBCG	406 - 80
DSA1.2-14A	♦BBCG	409 - 77
DSA1.2-16A	♦BBCG	412 - 56
DSA2-12A	BBCG	406 - 92
DSA2-14A	♦BBCG	409 - 80
DSA2-16A	♦BBCG	412 - 62
DSA6-12F	BBCG	406 -166
DSA6-14F	BBCG	409 -108
DSA6-16F	BBCG	409 -109
DSA9-12F	BBCG	406 -173
DSA9-14F	BBCG	409 -111
DSA9-16F	BBCG	412 -106
DSA10G	TSAJ	281 -168
DSA10J	TSAJ	282 - 42
DSA10L	TSAJ	401 -166
DSA015	TSAJ	246 -145
DSA17-12A	BBCG	406 -220
DSA17-14A	♦BBCG	409 -130
DSA17-16A	♦BBCG	412 -122
DSA17B	TSAJ	285 -173
DSA17C	TSAJ	285 -175
DSA17E	TSAJ	285 -177
DSA22-12A	BBCG	407 - 41
DSA22-14A	♦BBCG	409 -139
DSA22-16A	♦BBCG	412 -132
DSA26B	TSAJ	287 -135
DSA26C	TSAJ	287 -138
DSA26E	TSAJ	287 -140
DSA35-12A	BBCG	407 - 56
DSA35-14A	♦BBCG	409 -158
DSA35-16A	♦BBCG	412 -148
DSA42-12A	BBCG	407 - 76
DSA42-14A	♦BBCG	409 -171
DSA42-16A	♦BBCG	412 -158
DSA75-12B	BBCG	407 -128
DSA75-14B	♦BBCG	409 -180
DSA75-16B	♦BBCG	412 -167
DSA80-12A	BBCG	407 -169
DSA80-14A	♦BBCG	409 -196
DSA80-16A	♦BBCG	412 -183
DSA110-12A	BBCG	407 -205
DSA110-14A	♦BBCG	410 - 19
DSA110-16A	♦BBCG	412 -220
DSA304-11A	♦BBCG	405 -132
DSA304-14A	♦BBCG	410 - 76
DSA304-17A	♦BBCG	413 -156
DSA304-20A	♦BBCG	415 -145
DSA304-23A	♦BBCG	416 -161
DSA400-11KC	♦BBCG	405 -144
DSA400-11NC	♦BBCG	405 -139
DSA400-14KC	♦BBCG	410 -111
DSA400-14NC	♦BBCG	410 - 92
DSA400-17KC	BBCG	413 -159
DSA400-17NC	♦BBCG	413 -158
DSA400-20KC	♦BBCG	415 -164
DSA400-20NC	♦BBCG	414 -174
DSA400-23KC	♦BBCG	416 -166
DSA400-23NC	♦BBCG	416 -160
DSA401-26GE	BBCG	418 - 69
DSA401-26LE	BBCG	418 - 70
DSA401-29GE	BBCG	419 - 9
DSA401-29LE	BBCG	419 - 10
DSA401-32GE	BBCG	420 - 77
DSA401-32LE	BBCG	420 - 78
DSA401-38GG	BBCG	421 - 90
DSA401-38LG	BBCG	421 - 91
DSA401-44GG	BBCG	422 -162
DSA401-44LG	BBCG	422 -163
DSA401-50GG	BBCG	424 - 58
DSA401-50LG	BBCG	424 - 59
DSA403-38GG	♦BBCG	421 - 92
DSA403-38L1G	♦BBCG	421 - 93
DSA403-44GG	♦BBCG	422 -164
DSA403-44L1G	♦BBCG	422 -165
DSA403-50GG	♦BBCG	424 - 60
DSA403-50L1G	♦BBCG	424 - 61
DSA405-38AG	BBCG	421 -100
DSA405-44AG	BBCG	422 -175
DSA405-50AG	BBCG	424 - 66
DSA503-23GE	BBCG	416 -167
DSA503-23L1E	BBCG	416 -168
DSA503-26GE	BBCG	418 - 74
DSA503-26L1E	BBCG	418 - 75
DSA503-29G	BBCG	419 - 11
DSA503-29GE	BBCG	419 - 12
DSA503-29L1E	BBCG	419 - 13
DSA503-32GE	BBCG	420 - 79
DSA503-32L1E	BBCG	420 - 80
DSA603-11GC	BBCG	405 -145
DSA603-11L1C	BBCG	405 -146
DSA603-14GC	BBCG	410 -112
DSA603-14L1C	BBCG	410 -113
DSA603-17GC	BBCG	413 -160
DSA603-17L1C	BBCG	413 -161
DSA603-20GC	BBCG	415 -165
DSA603-20L1C	BBCG	415 -166
DSA605-23AE	BBCG	416 -180
DSA605-26AE	BBCG	418 - 92
DSA605-29AE	BBCG	419 - 24
DSA605-32AE	BBCG	420 - 94
DSA705-11AC	BBCG	405 -173
DSA705-14AC	BBCG	410 -174
DSA705-17AC	BBCG	413 -176
DSA705-20AC	BBCG	415 -212
DSA908-38AG	BBCG	421 -103
DSA908-44AG	BBCG	422 -178
DSA908-50AG	BBCG	424 - 68

TYPE No.	MFRS	Pg&Line
DSA1208-23AE	BBCG	416 -187
DSA1208-26AE	BBCG	418 -102
DSA1208-29AE	BBCG	419 - 31
DSA1208-32AE	BBCG	420 -101
DSA1508-11AC	♦BBCG	405 -175
DSA1508-14AC	♦BBCG	410 -178
DSA1508-17AC	♦BBCG	413 -178
DSA1508-20AC	♦BBCG	415 -215
DSAI75-11B	♦BBCG	405 - 99
DSAI75-14B	♦BBCG	409 -202
DSAS05-0	BBCG	342 -110
DSAS05-2	BBCG	343 - 1
DSAS05-4	BBCG	343 - 2
DSAS05-6	BBCG	343 - 3
DSAS5U	BBCG	343 - 4
DSAS6U	BBCG	343 - 5
DSAS07-0	BBCG	343 - 6
DSAS07-2	BBCG	343 - 7
DSAS07-4	BBCG	343 - 8
DSAS07-6	BBCG	343 - 9
DSAS7U	BBCG	343 - 10
DSAS8U	BBCG	343 - 11
DSAS09-0	BBCG	358 - 36
DSAS09-2	BBCG	358 - 37
DSAS09-4	BBCG	358 - 38
DSAS09-6	BBCG	358 - 39
DSAS9U	BBCG	343 - 12
DSAS10U	BBCG	343 - 13
DSAS11-0	BBCG	358 - 40
DSAS11-2	BBCG	358 - 41
DSAS11-4	BBCG	358 - 42
DSAS11-6	BBCG	358 - 43
DSAS11U	BBCG	343 - 14
DSAS12U	BBCG	343 - 15
DSAS13-0	BBCG	358 - 44
DSAS13-2	BBCG	358 - 45
DSAS13-4	BBCG	358 - 46
DSAS13-6	BBCG	358 - 47
DSAS13U	BBCG	343 - 16
DSAS14U	BBCG	343 - 17
DSAS15-0	BBCG	358 - 48
DSAS15-2	BBCG	358 - 49
DSAS15-4	BBCG	358 - 50
DSAS15-6	BBCG	358 - 51
DSAS15U	BBCG	343 - 18
DSAS16U	BBCG	343 - 19
DSAS17-0	BBCG	358 - 52
DSAS17-4	BBCG	358 - 53
DSAS19-0	BBCG	358 - 54
DSAS19-4	BBCG	358 - 55
DSAS21-0	BBCG	358 - 56
DSAS21-4	BBCG	358 - 57
DSAS23-0	BBCG	358 - 58
DSAS23-4	BBCG	358 - 59
DSAS25-0	BBCG	358 - 60
DSAS25-4	BBCG	358 - 61
DSAS27-0	BBCG	358 - 62
DSAS27-4	BBCG	358 - 63
DSAS29-0	BBCG	358 - 64
DSAS29-4	BBCG	358 - 65
DSAS31-0	BBCG	358 - 66
DSAS31-4	BBCG	358 - 67
DSB015	TSAJ	246 -138
DSB15B	TSAJ	283 -160
DSB15C	TSAJ	284 - 6
DSB15E	TSAJ	284 -113
DSB15G	TSAJ	284 -215
DSD0.8-02B	♦BBCG	259 -122
DSD0.9-02A	♦BBCG	259 -123
DSD12-02A	BBCG	259 - 58
DSD12-04A	♦BBCG	260 - 25
DSD12-06A	♦BBCG	260 -160
DSD12-08A	♦BBCG	261 - 48
DSD12-12A	BBCG	261 -156
DSD12-14A	BBCG	261 -166
DSD12-16A	♦BBCG	261 -170
DSD17-02B	♦BBCG	262 -103
DSD17-04B	♦BBCG	262 -109
DSD17-06B	♦BBCG	262 -115
DSD17-08B	♦BBCG	262 -119
DSD17-12B	♦BBCG	261 -157
DSD17-14B	♦BBCG	262 -124
DSD17-16B	♦BBCG	262 -125
DSD35-02A	♦BBCG	263 - 43
DSD35-04A	♦BBCG	263 - 44
DSD35-06A	♦BBCG	263 - 45
DSD35-08A	♦BBCG	263 - 46
DSD35-12A	BBCG	261 -158
DSD35-14A	♦BBCG	263 - 51
DSD35-16A	♦BBCG	263 - 54
DSD110-12A	BBCG	263 -146
DSD110-14A	♦BBCG	263 -147
DSD110-16A	♦BBCG	263 -148
DSD304-11A	♦BBCG	264 - 61
DSD304-14A	♦BBCG	264 - 64
DSD304-16A	♦BBCG	264 - 65
DSD605-11A	♦BBCG	268 -160
DSD605-14A	♦BBCG	268 -165
DSD605-16A	♦BBCG	268 -168
DSD605-18A	♦BBCG	268 -170
DSD605-20A	♦BBCG	268 -173
DSD625-25A	BBCG	268 - 77
DSD625-25D	BBCG	268 - 78
DSD625-30A	BBCG	268 - 81
DSD635-22A	BBCG	268 - 67
DSD635-22D	BBCG	268 - 68
DSD1028-25A	BBCG	268 -119
DSD1028-25D	BBCG	268 -121
DSD1028-30A	BBCG	268 -137
DSD1038-22A	BBCG	268 -103
DSD1038-22D	BBCG	268 -105
DSDI7-01B	BBCG	258 - 12
DSDI7-015B	BBCG	258 -171
DSDI13-01B	BBCG	258 - 13

TYPE No.	MFRS	Pg&Line
DSDI13-015B	BBCG	258 -172
DSDI20-01B	BBCG	258 - 26
DSDI20-015B	BBCG	258 -185
DSDI36-01B	BBCG	258 - 27
DSDI36-015B	BBCG	258 -186
DSF10A	TSAJ	279 -214
DSF10B	TSAJ	280 - 56
DSF10C	TSAJ	280 -144
DSF10E	TSAJ	281 - 51
DSF10G	TSAJ	281 -169
DSF402ST01	♦AEIL	264 - 51
DSF402ST02	♦AEIL	264 - 52
DSF402ST03	♦AEIL	264 - 53
DSF402ST04	♦AEIL	264 - 54
DSF402ST05	♦AEIL	264 - 55
DSF402ST06	♦AEIL	264 - 56
DSF402ST07	♦AEIL	264 - 57
DSF402ST08	♦AEIL	264 - 58
DSF402ST09	♦AEIL	264 - 59
DSF402ST10	♦AEIL	264 - 60
DSF402ST11	♦AEIL	264 - 62
DSF402ST12	♦AEIL	264 - 63
DSF502ST06	♦AEIL	264 - 71
DSF502ST07	♦AEIL	264 - 72
DSF502ST08	♦AEIL	264 - 75
DSF502ST09	♦AEIL	264 - 76
DSF502ST10	♦AEIL	264 - 66
DSF502ST11	♦AEIL	264 - 67
DSF502ST12	♦AEIL	264 - 68
DSF912SM01	♦AEIL	265 -123
DSF912SM02	♦AEIL	265 -124
DSF912SM03	♦AEIL	265 -127
DSF912SM04	♦AEIL	265 -129
DSF912SM05	♦AEIL	265 -132
DSF912SM06	♦AEIL	265 -134
DSF912SM07	♦AEIL	265 -139
DSF912SM08	♦AEIL	265 -141
DSF912SM09	♦AEIL	265 -144
DSF912SM10	♦AEIL	265 -148
DSF912SM11	♦AEIL	265 -152
DSF912SM12	♦AEIL	265 -156
DSF912SM13	♦AEIL	265 -158
DSF912SM14	♦AEIL	265 -160
DSF912SM15	♦AEIL	265 -164
DSF912SM16	♦AEIL	265 -166
DSF912SM17	♦AEIL	265 -167
DSF912SM18	♦AEIL	265 -169
DSF912SM19	♦AEIL	265 -170
DSF912SM20	♦AEIL	265 -172
DSF912SM21	♦AEIL	265 -173
DSF912SM22	♦AEIL	265 -174
DSF912SM23	♦AEIL	265 -175
DSF912SM24	♦AEIL	265 -177
DSF912SM25	♦AEIL	265 -178
DSF912SM26	♦AEIL	265 -180
DSF1108SM01	♦AEIL	238 -207
DSF1108SM02	♦AEIL	239 - 94
DSF1108SM03	♦AEIL	239 -132
DSF1108SM04	♦AEIL	239 -188
DSF1108SM05	♦AEIL	239 -211
DSF1108SM06	♦AEIL	240 - 41
DSF1108SM07	♦AEIL	240 - 58
DSF1108SM08	♦AEIL	240 - 95
DSF1108SM09	♦AEIL	240 -104
DSF1108SM10	♦AEIL	240 -138
DSF1108SM11	♦AEIL	240 -147
DSF1108SM12	♦AEIL	240 -152
DSF1112SM20	♦AEIL	268 - 97
DSF1112SM21	♦AEIL	268 - 99
DSF1112SM22	♦AEIL	268 -106
DSF1112SM23	♦AEIL	268 -110
DSF1112SM24	♦AEIL	268 -115
DSF1112SM25	♦AEIL	268 -122
DSF1114SM21	♦AEIL	268 -102
DSF1114SM22	♦AEIL	268 -109
DSF1114SM23	♦AEIL	268 -113
DSF1114SM24	♦AEIL	268 -118
DSF1114SM25	♦AEIL	268 -125
DSF1114SM26	♦AEIL	268 -129
DSF1114SM27	♦AEIL	268 -131
DSF1114SM28	♦AEIL	268 -133
DSF1114SM29	♦AEIL	268 -136
DSF1114SM30	♦AEIL	268 -139
DSF1114SM31	♦AEIL	240 -180
DSF1114SM32	♦AEIL	240 -181
DSF1114SM33	♦AEIL	240 -182
DSF1114SM34	♦AEIL	240 -183
DSF1114SM35	♦AEIL	240 -184
DSF1114SM36	♦AEIL	240 -185
DSF2013SD13	♦AEIL	240 -160
DSF2013SD14	♦AEIL	240 -165
DSF2013SD15	♦AEIL	240 -172
DSF2013SD16	♦AEIL	240 -176
DSF2013SD17	♦AEIL	268 - 91
DSF2013SD18	♦AEIL	268 - 94
DSF2013SD19	♦AEIL	268 - 95
DSF2013SD20	♦AEIL	268 - 98
DSF2013SD21	♦AEIL	268 -100
DSF2013SD22	♦AEIL	268 -107
DSF2013SD23	♦AEIL	268 -111
DSF2013SD24	♦AEIL	268 -116
DSF2013SD25	♦AEIL	268 -123
DSF2013SD26	♦AEIL	268 -127
DSF2030SD21	♦AEIL	268 -101
DSF2030SD22	♦AEIL	268 -108
DSF2030SD23	♦AEIL	268 -112
DSF2030SD24	♦AEIL	268 -117
DSF2030SD25	♦AEIL	268 -124
DSF2030SD26	♦AEIL	268 -128
DSF2030SD27	♦AEIL	268 -130
DSF2030SD28	♦AEIL	268 -132
DSF2030SD29	♦AEIL	268 -135
DSF2030SD30	♦AEIL	268 -138
DSF2030SD31	♦AEIL	268 -140

TYPE No.	MFRS	Pg&Line
DSF2030SD32	♦AEIL	268 -141
DSF2030SD33	♦AEIL	268 -142
DSF2030SD34	♦AEIL	268 -143
DSF2030SD35	♦AEIL	268 -144
DSF2030SD36	♦AEIL	268 -145
DSH4785-10	♦ALP	238 - 19
DSH4785-40	♦ALP	238 - 44
DSH4787-10	♦ALP	238 - 20
DSH4787-15	♦ALP	238 - 23
DSH4787-20	♦ALP	238 - 31
DSH4787-30	♦ALP	238 - 34
DSH4787-40	♦ALP	238 - 45
DSH6172	♦ALP	437 - 41
DSH6173	♦ALP	437 - 42
DSH6174	♦ALP	437 - 43
DSM30A4	♦HITJ	300 -122
DSM30A6	♦HITJ	300 -146
DSN6560-50	♦ALP	238 -122
DSN6566-50	♦ALP	238 -123
DSP2500A20	♦HITJ	416 - 20
DSP2500A25	♦HITJ	418 - 49
DSP2500A30	♦HITJ	420 - 25
DSR51	TRWS	240 -108
DSR54	TRWS	239 -138
DSR55	TRWS	239 -198
DSR56	TRWS	239 -217
DSR3050	♦TRWO	257 - 97
	♦TRWS	
DSR3051	♦TRWO	257 -121
	♦TRWS	
DSR3100	♦TRWO	257 -216
	♦TRWS	
DSR3101	♦TRWO	258 - 28
	♦TRWS	
DSR3150	♦TRWO	258 -161
	♦TRWS	
DSR3151	♦TRWO	258 -187
	♦TRWS	
DSR3200	♦TRWO	258 -210
	♦TRWS	
DSR3201	♦TRWO	259 - 17
	♦TRWS	
DSR3400X	♦TRWO	239 -139
	♦TRWS	
DSR3500X	♦TRWO	239 -199
	♦TRWS	
DSR3600X	♦TRWO	239 -218
	♦TRWS	
DSR3700X	♦TRWS	240 - 50
DSR3800X	♦TRWS	240 - 62
DSR5050	♦TRWO	257 - 98
	♦TRWS	
DSR5051	♦TRWO	257 -122
	♦TRWS	
DSR5052	♦TRWS	257 -146
DSR5100	♦TRWO	258 - 1
	♦TRWS	
DSR5101	♦TRWO	258 - 29
	♦TRWS	
DSR5102	♦TRWS	258 - 56
DSR5150	♦TRWO	258 -162
	♦TRWS	
DSR5151	♦TRWO	258 -188
	♦TRWS	
DSR5200	♦TRWO	258 -211
	♦TRWS	
DSR5201	♦TRWO	259 - 18
	♦TRWS	
DSR5202	TRWS	259 - 45
DSR5400X	♦TRWO	239 -140
	♦TRWS	
DSR5500X	♦TRWO	239 -200
	♦TRWS	
DSR5600X	♦TRWO	239 -219
	♦TRWS	
DSR5700X	♦TRWS	240 - 51
DSR5800X	♦TRWS	240 - 63
DSR31000X	♦TRWS	240 -109
DSR34000X	TRWS	239 -141
DSR35000X	TRWS	239 -201
DSR36000X	TRWS	239 -220
DSR37000X	TRWS	240 - 52
DSR38000X	TRWS	240 - 64
DSR51000X	♦TRWS	240 -110
DSR54000X	TRWS	239 -142
DSR55000X	TRWS	239 -202
DSR56000X	TRWS	240 - 1
DSR57000X	TRWS	240 - 53
DSR58000X	TRWS	240 - 65
DSS100A8	♦HITJ	306 -147
DSS100A10	♦HITJ	404 - 60
DSS100A13	♦HITJ	408 -217
DSS100A15	♦HITJ	411 -147
DSS300A8	♦HITJ	310 -105
DSS300A10	♦HITJ	404 -159
DSS300A13	♦HITJ	409 - 18
DSS300A15	♦HITJ	411 -184
DSZ412SE40	♦AEIL	422 - 57
DSZ412SE41	♦AEIL	422 - 88
DSZ412SE42	♦AEIL	422 -117
DSZ412SE43	♦AEIL	422 -134
DSZ412SE44	♦AEIL	422 -160
DSZ3006	♦TRWS	177 -139
DSZ3007	♦TRWS	179 -136
DSZ3008	♦TRWS	181 -109
DSZ3009	♦TRWS	184 -130
DSZ3010	♦TRWS	186 -188
DSZ3011	♦TRWS	188 -157
DSZ3012	♦TRWS	190 -100
DSZ3013	♦TRWS	192 - 95
DSZ3014	♦TRWS	193 -164
DSZ3015	♦TRWS	194 -109
DSZ3016	♦TRWS	196 - 25
DSZ3018	♦TRWS	198 - 17

Δ-Registered with JEDEC by this manufacturer

♦-Mfr's data sheet available in microfilm service

1. TYPE No. CROSS INDEX

IN TYPE NUMBER SEQUENCE

TYPE No.	MFRS	Pg&Line
DSZ3020	♦TRWS	200 - 30
DSZ3022	♦TRWS	201 -122
DSZ3024	♦TRWS	203 - 42
DSZ3027	♦TRWS	204 -174
DSZ3030	♦TRWS	206 -113
DSZ3033	♦TRWS	207 -194
DSZ3036	♦TRWS	209 - 86
DSZ3040	♦TRWS	211 -122
DSZ3045	♦TRWS	212 -128
DSZ3050	♦TRWS	213 -150
DSZ3056	♦TRWS	214 -154
DSZ3060	♦TRWS	215 -138
DSZ3062	♦TRWS	215 -168
DSZ3070	♦TRWS	217 -113
DSZ3075	♦TRWS	217 -136
DSZ3080	♦TRWS	218 -100
DSZ3090	♦TRWS	219 - 90
DSZ3100	♦TRWS	220 - 59
DSZ4110	♦TRWS	395 -120
DSZ4210	♦TRWS	395 -131
DSZ4706	♦TRWS	379 - 16
DSZ4707	♦TRWS	379 -128
DSZ4708	♦TRWS	380 - 49
DSZ4709	♦TRWS	380 -177
DSZ4710	♦TRWS	381 - 76
DSZ4712	♦TRWS	382 - 84
DSZ4713	♦TRWS	383 - 1
DSZ4715	♦TRWS	383 -164
DSZ4716	♦TRWS	384 - 77
DSZ4718	♦TRWS	385 - 30
DSZ4720	♦TRWS	385 -184
DSZ4722	♦TRWS	386 - 89
DSZ4724	♦TRWS	387 - 5
DSZ4727	♦TRWS	387 -143
DSZ4730	♦TRWS	388 - 63
DSZ4733	♦TRWS	388 -168
DSZ4736	♦TRWS	389 - 82
DSZ4739	♦TRWS	389 -186
DSZ4743	♦TRWS	390 - 97
DSZ4747	♦TRWS	391 - 29
DSZ4751	♦TRWS	391 -167
DSZ4756	♦TRWS	392 - 75
DSZ4762	♦TRWS	393 - 2
DSZ4768	♦TRWS	393 - 91
DSZ4775	♦TRWS	394 - 4
DSZ4782	♦TRWS	394 -119
DSZ4791	♦TRWS	395 - 30
DSZ4806	♦TRWS	379 - 25
DSZ4807	♦TRWS	379 -138
DSZ4808	♦TRWS	380 - 60
DSZ4809	♦TRWS	380 -188
DSZ4810	♦TRWS	381 - 86
DSZ4812	♦TRWS	382 - 95
DSZ4813	♦TRWS	383 - 11
DSZ4815	♦TRWS	383 -175
DSZ4816	♦TRWS	384 - 84
DSZ4818	♦TRWS	385 - 41
DSZ4820	♦TRWS	385 -195
DSZ4822	♦TRWS	386 - 99
DSZ4824	♦TRWS	387 - 16
DSZ4827	♦TRWS	387 -154
DSZ4830	♦TRWS	388 - 74
DSZ4833	♦TRWS	388 -179
DSZ4836	♦TRWS	389 - 93
DSZ4839	♦TRWS	389 -193
DSZ4843	♦TRWS	390 -104
DSZ4847	♦TRWS	391 - 36
DSZ4851	♦TRWS	391 -174
DSZ4856	♦TRWS	392 - 85
DSZ4862	♦TRWS	393 - 9
DSZ4868	♦TRWS	393 - 98
DSZ4875	♦TRWS	394 - 14
DSZ4882	♦TRWS	394 -126
DSZ4891	♦TRWS	395 - 37
DSZ5110	♦TRWS	395 -121
DSZ5210	♦TRWS	395 -132
DSZ5706	♦TRWS	379 - 17
DSZ5707	♦TRWS	379 -129
DSZ5708	♦TRWS	380 - 50
DSZ5709	♦TRWS	380 -178
DSZ5710	♦TRWS	381 - 77
DSZ5712	♦TRWS	382 - 85
DSZ5713	♦TRWS	383 - 2
DSZ5714	♦TRWS	383 - 98
DSZ5715	♦TRWS	383 -165
DSZ5716	♦TRWS	384 - 78
DSZ5718	♦TRWS	385 - 31
DSZ5720	♦TRWS	385 -185
DSZ5722	♦TRWS	386 - 90
DSZ5724	♦TRWS	387 - 6
DSZ5727	♦TRWS	387 -144
DSZ5730	♦TRWS	388 - 64
DSZ5733	♦TRWS	388 -169
DSZ5736	♦TRWS	389 - 83
DSZ5740	♦TRWS	390 - 65
DSZ5745	♦TRWS	390 -175
DSZ5750	♦TRWS	391 -115
DSZ5756	♦TRWS	392 - 76
DSZ5760	♦TRWS	392 -166
DSZ5770	♦TRWS	393 -169
DSZ5775	♦TRWS	394 - 5
DSZ5780	♦TRWS	394 - 92
DSZ5790	♦TRWS	395 - 4
DSZ5806	♦TRWS	379 - 26
DSZ5807	♦TRWS	379 -139
DSZ5808	♦TRWS	380 - 61
DSZ5809	♦TRWS	380 -189
DSZ5810	♦TRWS	381 - 87
DSZ5812	♦TRWS	382 - 96
DSZ5813	♦TRWS	383 - 12
DSZ5814	♦TRWS	383 -105
DSZ5815	♦TRWS	383 -176
DSZ5816	♦TRWS	384 - 85
DSZ5818	♦TRWS	385 - 42

TYPE No.	MFRS	Pg&Line
DSZ5820	♦TRWS	385 -196
DSZ5822	♦TRWS	386 -100
DSZ5824	♦TRWS	387 - 17
DSZ5827	♦TRWS	387 -155
DSZ5830	♦TRWS	388 - 75
DSZ5833	♦TRWS	388 -180
DSZ5836	♦TRWS	389 - 94
DSZ5840	♦TRWS	390 - 69
DSZ5845	♦TRWS	390 -182
DSZ5850	♦TRWS	391 -121
DSZ5856	♦TRWS	392 - 86
DSZ5860	♦TRWS	392 -171
DSZ5870	♦TRWS	393 -172
DSZ5875	♦TRWS	394 - 15
DSZ5880	♦TRWS	394 - 95
DSZ5890	♦TRWS	395 - 7
DT230A	GDC	236 - 45
	UNI	
DT230B	GDC	236 - 46
	UNI	
DT230F	GDC	236 - 47
	UNI	
DT230G	GDC	236 - 48
	UNI	
DT230H1	UNI	236 - 49
DT230H	UNI	236 - 33
DTZ6V8A	♦THEF	323 - 6
DTZ6V8P	♦THEF	323 - 7
DTZ7V5A	♦THEF	343 - 20
DTZ7V5P	♦THEF	323 - 8
DTZ8V2A	♦THEF	343 - 21
DTZ8V2P	♦THEF	323 - 9
DTZ9V1A	♦THEF	343 - 22
DTZ9V1P	♦THEF	323 - 10
DTZ10A	♦THEF	343 - 23
DTZ10P	♦THEF	323 - 11
DTZ11A	♦THEF	343 - 24
DTZ11P	♦THEF	323 - 12
DTZ12A	♦THEF	343 - 25
DTZ12P	♦THEF	323 - 13
DTZ13A	♦THEF	343 - 26
DTZ13P	♦THEF	323 - 14
DTZ15A	♦THEF	343 - 27
DTZ15P	♦THEF	323 - 15
DTZ16A	♦THEF	343 - 28
DTZ16P	♦THEF	323 - 16
DTZ18A	♦THEF	343 - 29
DTZ18P	♦THEF	323 - 17
DTZ20A	♦THEF	343 - 30
DTZ20P	♦THEF	323 - 18
DTZ22A	♦THEF	343 - 31
DTZ22P	♦THEF	323 - 19
DTZ24A	♦THEF	343 - 32
DTZ24P	♦THEF	323 - 20
DTZ27A	♦THEF	343 - 33
DTZ27P	♦THEF	323 - 21
DTZ30A	♦THEF	343 - 34
DTZ30P	♦THEF	323 - 22
DTZ33A	♦THEF	343 - 35
DTZ33P	♦THEF	323 - 23
DTZ36A	♦THEF	343 - 36
DTZ36P	♦THEF	323 - 24
DTZ39A	♦THEF	343 - 37
DTZ39P	♦THEF	323 - 25
DTZ43A	♦THEF	343 - 38
DTZ43P	♦THEF	323 - 26
DTZ47A	♦THEF	343 - 39
DTZ47P	♦THEF	323 - 27
DTZ51A	♦THEF	343 - 40
DTZ51P	♦THEF	323 - 28
DTZ56A	♦THEF	343 - 41
DTZ56P	♦THEF	323 - 29
DTZ62A	♦THEF	343 - 42
DTZ62P	♦THEF	323 - 30
DTZ68A	♦THEF	343 - 43
DTZ68P	♦THEF	323 - 31
DTZ75A	♦THEF	343 - 44
DTZ75P	♦THEF	323 - 32
DTZ82A	♦THEF	343 - 45
DTZ82P	♦THEF	323 - 33
DTZ91A	♦THEF	343 - 46
DTZ91P	♦THEF	323 - 34
DTZ100A	♦THEF	343 - 47
DTZ100P	♦THEF	323 - 35
DTZ110A	♦THEF	343 - 48
DTZ110P	♦THEF	323 - 36
DTZ120A	♦THEF	343 - 49
DTZ120P	♦THEF	323 - 37
DTZ130A	♦THEF	343 - 50
DTZ130P	♦THEF	323 - 38
DTZ150A	♦THEF	343 - 51
DTZ150P	♦THEF	323 - 39
DTZ160A	♦THEF	343 - 52
DTZ160P	♦THEF	323 - 40
DTZ170A	♦THEF	343 - 53
DTZ170P	♦THEF	323 - 41
DTZ180A	♦THEF	343 - 54
DTZ180P	♦THEF	323 - 42
DTZ200A	♦THEF	343 - 55
DTZ200P	♦THEF	323 - 43
DTZ220A	♦THEF	343 - 56
DTZ220P	♦THEF	323 - 44
DTZ250A	♦THEF	323 - 45
DTZ250P	♦THEF	323 - 46
DTZ280A	♦THEF	323 - 47
DTZ280P	♦THEF	323 - 48
DTZ300A	♦THEF	323 - 49
DTZ300P	♦THEF	323 - 50
DTZ320A	♦THEF	323 - 51
DTZ320P	♦THEF	323 - 52
DTZ350A	♦THEF	323 - 53
DTZ350P	♦THEF	323 - 54
DTZ400A	♦THEF	323 - 55
DTZ400P	♦THEF	323 - 56

TYPE No.	MFRS	Pg&Line
DTZ440A	♦THEF	323 - 57
DTZ440P	♦THEF	323 - 58
DZ800	UNI	234 - 4
DZ805	UNI	234 - 5
DZ806	UNI	234 - 6
DZB6.2	TSAJ	175 -107
DZB6.8	♦TSAJ	178 - 84
DZB7.5	♦TSAJ	180 - 78
DZB8.2	♦TSAJ	182 - 62
DZB9.1	♦TSAJ	185 - 95
DZB10	♦TSAJ	187 -148
DZB11	♦TSAJ	189 - 69
DZB12	♦TSAJ	191 - 32
DZB13	♦TSAJ	192 -202
DZB15	♦TSAJ	195 - 33
DZB16	♦TSAJ	196 -131
DZB18	♦TSAJ	198 -143
DZB20	♦TSAJ	200 -137
DZB22	♦TSAJ	202 - 36
DZB24	♦TSAJ	203 -138
DZB27	♦TSAJ	205 - 73
DZB30	♦TSAJ	207 - 2
DZC30	♦TSAJ	229 - 12
DZC50	♦TSAJ	229 - 63
E1	♦SAR	280 - 70
E1A3	EDL	280 - 37
E1B3	EDL	280 -119
E1C3	EDL	281 - 1
E1D3	EDL	281 - 3
E1E3	EDL	281 - 30
E1F3	EDL	281 - 32
E1G3	EDL	281 -126
E1H3	EDL	281 -151
E1K3	EDL	282 - 12
E1M3	EDL	282 - 26
E1N3	EDL	282 -100
E2A3	EDL	287 -208
E2B3	EDL	288 - 52
E2C3	EDL	288 -135
E2D3	EDL	288 -136
E2E3	EDL	288 -164
E2F3	EDL	288 -165
E2G3	EDL	289 - 12
E2H3	EDL	289 - 30
E2K3	EDL	289 - 94
E2M3	EDL	289 -106
E2N3	EDL	289 -163
E3A3	EDL	290 -128
E3B3	EDL	290 -156
E3C3	EDL	290 -194
E3D3	EDL	290 -196
E3E3	EDL	290 -213
E3F3	EDL	290 -215
E3G3	EDL	291 - 23
E3H3	EDL	291 - 37
E3K3	EDL	291 - 57
E3M3	EDL	291 - 61
E3N3	EDL	291 - 79
E4A3	EDL	291 -133
E4B3	EDL	291 -179
E4C3	EDL	292 - 9
E4D3	EDL	292 - 10
E4E3	EDL	292 - 37
E4F3	EDL	292 - 39
E4G3	EDL	292 - 76
E4H3	EDL	292 - 96
E4K3	EDL	292 -137
E4M3	EDL	292 -148
E4N3	EDL	292 -188
E5A3	EDL	293 - 70
E5B3	EDL	293 - 82
E5C3	EDL	293 - 95
E5D3	EDL	293 - 96
E5E3	EDL	293 -101
E5F3	EDL	293 -102
E5G3	EDL	293 -113
E5H3	EDL	293 -114
E5K3	EDL	293 -121
E5M3	EDL	293 -122
E5N3	EDL	293 -129
E6A3	EDL	293 -213
E6B3	EDL	294 - 18
E6C3	EDL	294 - 51
E6D3	EDL	294 - 56
E6E3	EDL	294 - 72
E6F3	EDL	294 - 75
E6G3	EDL	294 -104
E6H3	EDL	294 -118
E6K3	EDL	294 -135
E6M3	EDL	294 -137
E6N3	EDL	294 -154
E7A3	EDL	294 -192
E7B3	EDL	295 - 2
E7C3	EDL	295 - 37
E7D3	EDL	295 - 42
E7E3	EDL	295 - 60
E7F3	EDL	295 - 65
E7G3	EDL	295 - 90
E7H3	EDL	295 -109
E7K3	EDL	295 -138
E7M3	EDL	295 -148
E7N3	EDL	295 -173
E10DS1	INRJ	280 - 62
E10DS2	INRJ	280 -150
E10FS1	INRJ	272 -204
E10FS2	INRJ	273 - 17
E10QS03	INRJ	374 - 33
E10QS04	INRJ	374 - 40
E49A-B380-340-30		371 -124
	SIEG	
E49A-B500-450-30		371 -126
	SIEG	
E49B30-25-30	SIEG	371 - 27
E49B60-52-30	SIEG	371 - 47

TYPE No.	MFRS	Pg&Line
E49B125-110-30		371 - 65
	SIEG	
E49B250-225-30		371 - 98
	SIEG	
E49B380-340-30		371 -123
	SIEG	
E49B500-450-30		371 -125
	SIEG	
E50A-DB380-500-40		
	SIEG	373 - 61
E50A-DB500-670-40		
	SIEG	373 - 65
E50DB30-38-40	SIEG	373 - 46
E50DB60-78-40	SIEG	373 - 47
E50DB125-165-40		373 - 50
	SIEG	
E50DB250-330-40		373 - 55
	SIEG	
E50DB380-500-40		373 - 60
	SIEG	
E50DB500-670-40		373 - 64
	SIEG	
E814-0	♦SOD	368 -101
E814-1	♦SOD	368 -111
E814-2	♦SOD	368 -125
E814-3	♦SOD	368 -141
E814-4	♦SOD	368 -145
E814-6	♦SOD	368 -163
E814-8	♦SOD	368 -176
E815-0	♦SOD	368 -194
E815-1	♦SOD	368 -211
E815-2	♦SOD	369 - 9
E815-3	♦SOD	369 - 35
E815-4	♦SOD	369 - 39
E815-6	♦SOD	369 - 63
E815-8	♦SOD	369 - 88
E2106B40C5000-3300		
	SIEG	372 - 62
E2112B80C5000-3300		
	SIEG	372 - 63
E2220B125C5000-3300		
	SIEG	372 - 66
E2240B250C5000-3300		
	SIEG	372 - 67
E2506B40C5000-3300		
	SIEG	365 -145
E2506N	BBCG	365 - 33
E2512B80C5000-3300		
	SIEG	365 -147
E2512N	BBCG	365 - 47
E2620B125C5000-3300		
	SIEG	365 -149
E2620N	BBCG	365 - 70
E2640B250C5000-3300		
	SIEG	365 -151
E2640N	BBCG	365 - 98
E3806B40C5000-3300		
	SIEG	365 -146
E3812B80C5000-3300		
	SIEG	365 -148
E3820B125C5000-3300		
	SIEG	365 -150
E3840B250C5000-3300		
	SIEG	365 -152
EC080	EDI	283 - 17
EC100	EDI	402 - 23
EC120	EDI	406 - 73
ED6C3	ORIJ	424 -182
ED8H1	ORIJ	251 - 48
ED8N1	ORIJ	426 - 32
ED16H1	ORIJ	251 - 65
ED24H1	ORIJ	251 - 73
ED75X1	ORIJ	433 - 91
ED100X1	ORIJ	433 -129
ED125X1	ORIJ	433 -185
ED150X1	ORIJ	433 -192
ED-6C3	ORIJ	424 -187
ED-16N1	ORIJ	429 -191
ED-0152	ORIJ	414 -209
ED-1052	ORIJ	414 -210
EDH36-1	ORIJ	251 - 78
EDH36-2	ORIJ	251 - 79
EDH36-3	ORIJ	251 - 80
EF100	EDI	401 - 90
EF150	EDI	411 - 43
EF200	EDI	415 - 30
EFD13A	GTN	370 - 27
EFD13B	GTN	370 - 64
EFD13C	GTN	370 - 99
EFD13D	GTN	370 -120
EFD13E	GTN	370 -136
EFD13F	GTN	370 -141
EFD13G	GTN	370 -144
EFE13A	GTN	371 -129
EFE13B	GTN	371 -132
EFE13C	GTN	371 -135
EFE13D	GTN	371 -138
EFE13E	GTN	371 -141
EFE13F	GTN	371 -144
EFE13G	GTN	371 -147
EFE14A	GTN	371 -130
EFE14B	GTN	371 -133
EFE14C	GTN	371 -136
EFE14D	GTN	371 -139
EFE14E	GTN	371 -142
EFE14F	GTN	371 -145
EFE14G	GTN	371 -148
EFE15A	GTN	371 -131
EFE15B	GTN	371 -134
EFE15C	GTN	371 -137
EFE15D	GTN	371 -140
EFE15E	GTN	371 -143
EFE15F	GTN	371 -146
EFE15G	GTN	371 -149

TYPE No.	MFRS	Pg&Line
EFF13A	GTN	371 -183
EFF13B	GTN	371 -192
EFF13C	GTN	371 -200
EFF13D	GTN	371 -204
EFF13E	GTN	371 -209
EFF13F	GTN	371 -212
EFF13G	GTN	372 - 1
EFF14A	GTN	371 -184
EFF14B	GTN	371 -193
EFF14C	GTN	371 -201
EFF14D	GTN	371 -205
EFF14E	GTN	371 -210
EFF14F	GTN	371 -213
EFF14G	GTN	372 - 2
EFF15A	GTN	371 -185
EFF15B	GTN	371 -194
EFF15C	GTN	371 -202
EFF15D	GTN	371 -206
EFF15E	GTN	371 -211
EFF15F	GTN	371 -214
EFF15G	GTN	372 - 3
EFG13A	GTN	372 - 24
EFG13B	GTN	372 - 34
EFG13C	GTN	372 - 43
EFG13D	GTN	372 - 48
EFG13E	GTN	372 - 53
EFG13F	GTN	372 - 56
EFG13G	GTN	372 - 59
EFG14A	GTN	372 - 25
EFG14B	GTN	372 - 35
EFG14C	GTN	372 - 44
EFG14D	GTN	372 - 49
EFG14E	GTN	372 - 54
EFG14F	GTN	372 - 57
EFG14G	GTN	372 - 60
EFG15A	GTN	372 - 26
EFG15B	GTN	372 - 36
EFG15C	GTN	372 - 45
EFG15D	GTN	372 - 50
EFG15E	GTN	372 - 55
EFG15F	GTN	372 - 58
EFG15G	GTN	372 - 61
EFR1A	♦GIC	445 - 35
EFR1B	♦GIC	445 - 36
EFR1C	♦GIC	445 - 37
EFR1D	♦GIC	445 - 38
EFR3A	♦GIC	445 - 39
EFR3B	♦GIC	445 - 40
EFR3C	♦GIC	445 - 41
EFR3D	♦GIC	445 - 42
EFR5A	♦GIC	445 - 43
EFR5B	♦GIC	445 - 44
EFR5C	♦GIC	445 - 45
EFR5D	♦GIC	445 - 46
EFR8A	♦GIC	445 - 47
EFR8B	♦GIC	445 - 48
EFR8C	♦GIC	445 - 49
EFR8D	♦GIC	445 - 50
EG200	EDI	415 - 16
EG250	EDI	417 -129
EG300	EDI	419 -105
EGP10A	♦GIC	280 - 7
EGP10B	♦GIC	280 - 81
EGP10C	♦GIC	280 -123
EGP10D	♦GIC	280 -176
EGP20A	♦GIC	285 -216
EGP20B	♦GIC	286 - 30
EGP20C	♦GIC	286 - 40
EGP20D	♦GIC	286 - 71
EGP30A	♦GIC	287 -191
EGP30B	♦GIC	288 - 28
EGP30C	♦GIC	288 - 62
EGP30D	♦GIC	288 -107
EGP50A	♦GIC	290 -116
EGP50B	♦GIC	290 -141
EGP50C	♦GIC	290 -158
EGP50D	♦GIC	290 -177
EH250	EDI	417 -124
EH300	EDI	419 - 93
EH350	EDI	420 -184
EH400	EDI	421 -179
EK450	EDI	422 -191
EK500	EDI	423 -111
EK600	EDI	424 -161
EM513	♦ITTG	401 -208
EQA01-05	FEC	171 - 10
EQA01-05R	FEC	170 -170
EQA01-05S	FEC	171 - 9
EQA01-05T	FEC	172 - 54
EQA01-06	FEC	174 - 16
EQA01-06R	FEC	173 - 17
EQA01-06S	FEC	174 - 12
EQA01-06T	FEC	176 - 19
EQA01-07	FEC	179 - 9
EQA01-07R	FEC	177 -116
EQA01-07S	FEC	179 - 62
EQA01-08	FEC	181 - 44
EQA01-08R	FEC	180 - 50
EQA01-08S	FEC	181 - 81
EQA01-09	FEC	183 -206
EQA01-09R	FEC	183 -100
EQA01-09S	FEC	184 - 91
EQA01-10	FEC	186 -152
EQA01-10R	FEC	186 -110
EQA01-10S	FEC	187 -105
EQA01-11	FEC	190 - 8
EQA01-11R	FEC	188 -129
EQA01-11S	FEC	190 - 15
EQA01-12	FEC	191 -189
EQA01-12R	FEC	190 - 83
EQA01-12S	FEC	192 - 6
EQA01-13R	FEC	193 -125
EQA01-14R	FEC	193 -194
EQA01-15R	FEC	195 - 8

1. TYPE No. CROSS INDEX

IN TYPE NUMBER SEQUENCE

TYPE No.	MFRS	Pg&Line
EQA01-16R	FEC	196 -113
EQA01-17R	FEC	197 -118
EQA01-18R	FEC	198 -122
EQA01-19R	FEC	199 -132
EQA01-20R	FEC	200 -119
EQA01-21R	FEC	201 - 92
EQA01-22R	FEC	202 -181
EQA01-24R	FEC	203 - 23
EQA01-25R	FEC	204 -111
EQA01-26R	FEC	204 -155
EQA01-28R	FEC	206 - 46
EQA01-30R	FEC	206 -188
EQA01-32R	FEC	207 -158
EQA01-33R	FEC	209 - 29
EQA01-35R	FEC	209 - 74
EQA02-05AB	FEC	170 - 52
EQA02-05CD	FEC	171 - 8
EQA02-05EF	FEC	172 - 53
EQA02-06CD	FEC	174 - 7
EQA02-06EF	FEC	176 -191
EQA02-07AB	FEC	178 - 46
EQA02-07CD	FEC	179 - 82
EQA02-08AB	FEC	181 - 28
EQA02-08CD	FEC	181 - 93
EQA02-09AB	FEC	183 -169
EQA02-09CD	FEC	186 - 37
EQA02-10AB	FEC	186 -151
EQA02-11AB	FEC	190 - 19
EQA02-11CD	FEC	190 - 87
EQA02-12AB	FEC	192 - 21
EQA02-13AB	FEC	193 -147
EQA02-14AB	FEC	194 - 79
EQA02-15AB	FEC	195 -188
EQA02-16AB	FEC	197 - 69
EQA02-17AB	FEC	197 -182
EQA02-18AB	FEC	199 -105
EQA02-20AB	FEC	201 - 72
EQA02-21AB	FEC	201 -103
EQA02-22AB	FEC	202 -180
EQA02-25AC	FEC	204 -139
EQA02-28AC	FEC	206 - 18
EQA02-30AC	FEC	206 - 99
EQA02-32AC	FEC	207 -163
EQA02-33AC	FEC	188 -128
EQB01-05	FEC	171 - 15
EQB01-06	FEC	174 - 22
EQB01-07	FEC	179 - 12
EQB01-08	FEC	181 - 46
EQB01-09	FEC	183 -209
EQB01-10	FEC	186 -155
EQB01-11	FEC	190 - 11
EQB01-12	FEC	191 -190
EQB01-13	FEC	193 -128
EQB01-14	FEC	194 - 14
EQB01-15	FEC	195 - 89
EQB01-16	FEC	196 -179
EQB01-17	FEC	197 -132
EQB01-18	FEC	198 -197
EQB01-19	FEC	199 -143
EQB01-20	FEC	200 -188
EQB01-21	FEC	201 - 95
EQB01-22	FEC	202 -182
EQB01-24	FEC	203 - 24
EQB01-25	FEC	204 -120
EQB01-26	FEC	204 -156
EQB01-28	FEC	206 - 55
EQB01-30	FEC	207 - 50
EQB01-32	FEC	207 -159
EQB01-33	FEC	209 - 30
EQB01-35	FEC	209 - 75
ER401	GDC	280 - 32
ER402	GDC	280 -113
ER403	GDC	280 -213
ER404	GDC	281 -118
ER405	GDC	282 - 8
ER406	GDC	282 - 92
ER407	GDC	402 - 5
ER442	GDC	405 - 67
ER443	GDC	406 - 60
ER444	GDC	408 -187
ERA81-004	FEC	374 - 46
ERA84-009	♦FEC	374 - 58
ERB12-01	FEC	280 - 44
ERB12-02	FEC	280 -132
ERB12-04	FEC	281 - 35
ERB12-06	FEC	281 -155
ERB12-10	FEC	401 -151
ERB16-08	FEC	283 - 52
ERB16-12	FEC	406 - 77
ERB24-04C	FEC	250 -198
ERB24-04D	FEC	250 -200
ERB24-06C	FEC	251 - 3
ERB24-06D	FEC	251 - 5
ERB26-20	FEC	251 - 36
ERB28-04	FEC	250 -182
ERB28-04D	FEC	250 -201
ERB28-06	FEC	250 -213
ERB28-06D	FEC	251 - 6
ERB30-13	FEC	251 - 26
ERB30-15	FEC	251 - 30
ERB43-02	FEC	250 -152
ERB43-04	FEC	250 -183
ERB81-004	FEC	374 - 66
ERB84-009	♦FEC	374 - 67
ERC01-02	FEC	283 -178
ERC01-02F	FEC	285 -183
ERC01-04	FEC	284 - 65
ERC01-04F	FEC	285 -184
ERC01-06	FEC	284 -168
ERC01-10	FEC	402 - 36
ERC04-02	FEC	282 -166
ERC04-02F	FEC	283 -179
ERC04-04	FEC	282 -188
ERC04-04F	FEC	284 - 66

TYPE No.	MFRS	Pg&Line
ERC04-06	FEC	282 -207
ERC04-10	FEC	402 - 16
ERC16-06	FEC	287 - 83
ERC16-10	FEC	402 -126
ERC16-12	FEC	406 -100
ERC24-04	FEC	250 -184
ERC24-06	FEC	250 -214
ERC25-04	FEC	250 -185
ERC25-06	FEC	250 -215
ERC26-13	FEC	251 - 24
ERC26-15	FEC	251 - 28
ERC27-13	FEC	251 - 25
ERC27-15	FEC	251 - 29
ERC33-02	FEC	250 -141
ERC46-02	FEC	250 -161
ERC46-04	FEC	250 -196
ERC47-02	FEC	250 -153
ERC47-04	FEC	250 -186
ERC81-004	FEC	374 - 82
ERC84-009	♦FEC	374 - 91
ERC88-009	♦FEC	374 -121
ERD03-02	FEC	288 - 65
ERD03-04	FEC	288 -167
ERD28-04	FEC	250 -187
ERD28-06	FEC	250 -216
ERD29-02	FEC	250 -154
ERD29-04	FEC	250 -188
ERD29-06	FEC	250 -217
ERD33-02	FEC	250 -142
ERD81B004	FEC	374 -182
ERE81B004	FEC	375 - 20
ES481A	♦GTN	305 -208
ES481B	♦GTN	306 - 35
ES481C	♦GTN	306 - 92
ES481D	♦GTN	306 -136
ES481E	♦GTN	404 - 49
ES481F	♦GTN	407 -131
ES482A	♦GTN	305 -209
ES482B	♦GTN	306 - 36
ES482C	♦GTN	306 - 93
ES482D	♦GTN	306 -137
ES482E	♦GTN	404 - 50
ES482F	♦GTN	407 -132
ES483A	♦GTN	305 -210
ES483B	♦GTN	306 - 37
ES483C	♦GTN	306 - 94
ES483D	♦GTN	306 -138
ES483E	♦GTN	404 - 51
ES483F	♦GTN	407 -133
ES484A	♦GTN	305 -211
ES484B	♦GTN	306 - 38
ES484C	♦GTN	306 - 95
ES484D	♦GTN	306 -139
ES484E	♦GTN	404 - 52
ES484F	♦GTN	407 -134
ES485A	♦GTN	305 -212
ES485B	♦GTN	306 - 39
ES485C	♦GTN	306 - 96
ES485D	♦GTN	306 -140
ES485E	♦GTN	404 - 53
ES485F	♦GTN	407 -135
ES581A	♦GTN	305 -213
ES581B	♦GTN	306 - 40
ES581C	♦GTN	306 - 97
ES581D	♦GTN	306 -141
ES581E	♦GTN	404 - 54
ES581F	♦GTN	407 -136
ES582A	♦GTN	305 -214
ES582B	♦GTN	306 - 41
ES582C	♦GTN	306 - 98
ES582D	♦GTN	306 -142
ES582E	♦GTN	404 - 55
ES582F	♦GTN	407 -137
ES583A	♦GTN	305 -215
ES583B	♦GTN	306 - 42
ES583C	♦GTN	306 - 99
ES583D	♦GTN	306 -143
ES583E	♦GTN	404 - 56
ES583F	♦GTN	407 -138
ES584A	♦GTN	305 -216
ES584B	♦GTN	306 - 43
ES584C	♦GTN	306 -100
ES584D	♦GTN	306 -144
ES584E	♦GTN	404 - 57
ES584F	♦GTN	407 -139
ES585A	♦GTN	305 -217
ES585B	♦GTN	306 - 44
ES585C	♦GTN	306 -101
ES585D	♦GTN	306 -145
ES585E	♦GTN	404 - 58
ES585F	♦GTN	407 -140
ESAB82-004	FEC	374 -111
ESAB85-009	♦FEC	374 -122
ESAC25C/N02	FEC	250 -162
ESAC25C/N04	FEC	250 -197
ESAC33-02C	FEC	250 -143
ESAC82-004	FEC	374 -147
ESAC83-004	FEC	375 -157
ESAC85-009	♦FEC	374 -152
ESAC87-009	♦FEC	374 -211
ESAD33-02C	FEC	271 -120
ESAD81-004A	FEC	375 - 18
ESAD82-004	FEC	375 -162
ESAD85-009	♦FEC	375 - 3
ESAG84-004	♦FEC	375 -127
ESDA5	♦GSE	343 - 57
ESDA8	♦GSE	343 - 58
ESDA10	♦GSE	343 - 59
ESDA12	♦GSE	343 - 60
ESDA15	♦GSE	343 - 61
ESDA20	♦GSE	343 - 62
ESDA25	♦GSE	343 - 63
ESDA30	♦GSE	343 - 64
ESDA50	♦GSE	343 - 65

TYPE No.	MFRS	Pg&Line
ESJA17-16	FEC	429 -181
ESJA17-20	FEC	430 -152
ESJA17-25	FEC	431 -116
ESJA18-16	FEC	429 -182
ESJA18-20	FEC	430 -120
ESJA18-25	FEC	431 -117
ESJA18-30	FEC	432 - 57
ESJA25-04	FEC	421 -124
ESJA25-06	FEC	424 -121
ESJA25-08	FEC	425 -213
ESJA25-10	FEC	427 - 3
ESJA25-12	FEC	428 - 25
ESJA25-16	FEC	429 -170
ESJA25-20	FEC	430 - 96
ESM243-50	♦THEF	257 -152
ESM243-100	♦SSEI	258 - 63
	♦THEF	
ESM243-200	♦SSEI	259 - 59
	♦THEF	
ESM243-300	♦SSEI	239 -110
ESM243-300R	♦THEF	259 -187
ESM243-400	♦SSEI	260 - 26
	♦THEF	
ESM244-50	♦SSEI	257 -161
	♦THEF	
ESM244-100	♦SSEI	258 - 82
	♦THEF	
ESM244-200	♦SSEI	259 - 80
	♦THEF	
ESM244-300	♦THEF	303 -123
ESM244-400	♦SSEI	260 - 47
	♦THEF	
ESM244-500	♦THEF	303 -168
ESM244-600	♦SSEI	260 -176
	♦THEF	
ESM244-800	♦SSEI	240 - 73
ESM244-1000	♦SSEI	240 -119
ESM245-600	♦THEF	261 - 24
ESM245-800	♦THEF	261 - 87
ESM245-1000	♦THEF	261 -137
ESM245-1000R	♦THEF	261 -138
ESM765-100	♦THEF	258 -123
ESM765-200	♦THEF	259 -124
ESM765-400	♦THEF	260 - 81
ESM765-600	THEF	260 -214
ESM765-800	♦THEF	261 - 69
ESM4116-200	♦THEF	263 -212
ESM4116-400	♦THEF	263 -218
ESM4116-500	♦THEF	264 - 3
ESM4116-600	♦THEF	264 - 6
ESM4120-600	♦THEF	264 - 7
ESM4120-800	♦THEF	264 - 14
ESM4120-900	♦THEF	264 - 19
ESM4120-1000	♦THEF	264 - 22
ESP550	ELT	290 -126
ESP5100	ELT	290 -154
ESP5200	ELT	290 -192
ESP5300	ELT	290 -212
ESP5400	ELT	291 - 21
ESP5500	ELT	291 - 36
ESP5600	ELT	291 - 55
ESP5800	ELT	291 - 77
ESP51000	ELT	402 -214
ESZ5.1	♦SELI	171 - 37
ESZ5.6	♦SELI	172 -110
ESZ6.2	♦SELI	174 - 98
ESZ6.8	♦SELI	177 -149
ESZ7.5	♦SELI	179 -141
ESZ8.2	♦SELI	181 -120
ESZ9.1	♦SELI	184 -136
ESZ10	♦SELI	186 -198
ESZ11	♦SELI	188 -162
ESZ12	♦SELI	190 -111
EV12R	♦THEF	251 - 58
EV15	♦THEF	429 - 64
EW15R	♦THEF	251 - 63
EW20	♦THEF	430 -163
F1A3	EDL	290 -129
F1B3	EDL	290 -157
F1C3	EDL	290 -195
F1D3	EDL	290 -197
F1E3	EDL	290 -214
F1F3	EDL	290 -216
F1G3	EDL	291 - 24
F1H3	EDL	291 - 38
F1K3	EDL	291 - 58
F1M3	EDL	291 - 62
F1N3	EDL	291 - 80
F2A3	EDL	293 -214
F2B3	EDL	294 - 19
F2C3	EDL	294 - 52
F2D3	EDL	294 - 57
F2E3	EDL	294 - 73
F2F3	EDL	294 - 76
F2G3	EDL	294 -105
F2H3	EDL	294 -119
F2K3	EDL	294 -136
F2M3	EDL	294 -138
F2N3	EDL	294 -155
F3A3	♦EDL	300 - 24
F3B3	♦EDL	300 - 55
F3C3	♦EDL	300 - 90
F3D3	♦EDL	300 - 95
F3E3	♦EDL	300 -104
F3F3	♦EDL	300 -107
F3G3	♦EDL	300 -128
F3H3	♦EDL	300 -136
F3K3	♦EDL	300 -149
F3M3	♦EDL	300 -153
F3N3	♦EDL	300 -166
F3P3	♦EDL	403 -162
F3R3	♦EDL	407 - 5
F3S3	♦EDL	411 -127
F4A3	♦EDL	301 - 51

TYPE No.	MFRS	Pg&Line
F4B3	♦EDL	301 - 54
F4C3	♦EDL	301 - 58
F4D3	♦EDL	301 - 59
F4E3	♦EDL	301 - 61
F4F3	♦EDL	301 - 62
F4G3	♦EDL	301 - 63
F4H3	♦EDL	301 - 64
F4K3	♦EDL	301 - 65
F4M3	♦EDL	301 - 66
F4N3	♦EDL	301 - 67
F4P3	♦EDL	403 -171
F4R3	♦EDL	407 - 21
F4S3	♦EDL	411 -133
F5A3	♦EDL	302 - 53
F5B3	♦EDL	302 - 58
F5C3	♦EDL	302 - 65
F5D3	♦EDL	302 - 68
F5E3	♦EDL	302 - 73
F5F3	♦EDL	302 - 78
F5G3	♦EDL	302 - 82
F5H3	♦EDL	302 - 86
F5K3	♦EDL	302 - 94
F5M3	♦EDL	302 - 97
F5N3	♦EDL	302 -103
F5P3	♦EDL	403 -193
F5R3	♦EDL	407 - 44
F5S3	♦EDL	411 -134
F6A3	♦EDL	304 - 21
F6B3	♦EDL	304 - 41
F6C3	♦EDL	304 - 73
F6D3	♦EDL	304 - 85
F6E3	♦EDL	304 - 92
F6F3	♦EDL	304 -100
F6G3	♦EDL	304 -119
F6H3	♦EDL	304 -135
F6K3	♦EDL	304 -158
F6M3	♦EDL	304 -171
F6N3	♦EDL	304 -190
F6P3	♦EDL	404 - 18
F6R3	♦EDL	407 - 94
F6S3	♦EDL	411 -136
F7A3	♦EDL	305 - 62
F7B3	♦EDL	305 - 69
F7C3	♦EDL	305 - 81
F7D3	♦EDL	305 - 85
F7E3	♦EDL	305 - 88
F7F3	♦EDL	305 - 91
F7G3	♦EDL	305 - 98
F7H3	♦EDL	305 -104
F7K3	♦EDL	305 -113
F7M3	♦EDL	305 -118
F7N3	♦EDL	305 -124
F7P3	♦EDL	404 - 34
F7R3	♦EDL	407 -108
F7S3	♦EDL	411 -140
F8	SAR	282 - 61
F10	SAR	401 -193
F11	THEF	283 - 24
F12	THEF	286 - 10
F14A	NECJ	280 - 71
F14AP	NECJ	280 -106
F14B	NECJ	280 -162
F14BP	NECJ	280 -204
F14C	NECJ	281 - 16
F14CP	NECJ	281 - 22
F14D	NECJ	281 - 69
F14DP	NECJ	281 -109
F14E	NECJ	281 -141
F14F	NECJ	281 -185
F14H	NECJ	282 - 56
F14J	NECJ	401 -217
F15	♦SAR	249 -164
	♦SET	
F20	♦SAR	249 -178
	♦SET	
F21	THEF	283 - 27
F22	THEF	286 - 50
F25	♦SAR	249 -191
	♦SET	
F30	♦SET	249 -204
F40A	♦SET	249 -217
F40H	♦THEF	421 -218
F41	THEF	283 - 30
F42	THEF	286 - 99
F42Z	THEF	286 -100
F50A	♦SET	250 - 8
F60A	♦SET	250 - 16
F61	THEF	283 - 33
F62	THEF	286 -148
F62Z	THEF	286 -149
F80H	♦THEF	426 - 87
F81	THEF	283 - 36
F82	THEF	286 -189
F82Z	THEF	286 -190
F100H	♦THEF	427 -144
F101	THEF	402 - 30
F102	THEF	402 - 99
F102Z	THEF	402 -100
F114B	NECJ	280 -163
F114D	NECJ	281 - 70
F114E	NECJ	281 -142
F114F	NECJ	281 -186
F121	THEF	406 - 70
F150H	♦THEF	429 -114
F200HL	THEF	430 -183
F250HL	♦THEF	431 -147
F300HL	♦THEF	432 - 79
F799-0G	♦SOD	285 -196
F799-1G	♦SOD	286 - 6
F799-2G	♦SOD	286 - 43
F799-3G	♦SOD	286 - 81
F799-4G	♦SOD	286 - 95
F799-5G	♦SOD	286 -129
F799-6G	♦SOD	286 -144

TYPE No.	MFRS	Pg&Line
F799-8G	♦SOD	286 -184
F799-10G	♦SOD	402 - 93
F903-10G	♦SOD	360 - 85
F903-11G	♦SOD	360 -111
F903-12G	♦SOD	360 -144
F903-13G	♦SOD	360 -175
F903-14G	♦SOD	360 -180
F903-15G	♦SOD	360 -210
F903-16G	♦SOD	360 -213
F903-18G	♦SOD	361 - 32
F903-20G	♦SOD	362 -160
F903-21G	♦SOD	362 -194
F903-22G	♦SOD	363 - 24
F903-23G	♦SOD	363 - 67
F903-24G	♦SOD	363 - 73
F903-25G	♦SOD	363 -114
F903-26G	♦SOD	363 -119
F903-28G	♦SOD	363 -160
F903-40G	♦SOD	365 - 9
F903-41G	♦SOD	365 - 25
F903-42G	♦SOD	365 - 48
F903-43G	♦SOD	365 - 66
F903-44G	♦SOD	365 - 71
F903-45G	♦SOD	365 - 88
F903-46G	♦SOD	365 - 90
F903-48G	♦SOD	365 -111
F903-110G	♦SOD	361 - 56
F903-410G	♦SOD	365 -127
F903B-10G	♦SOD	360 - 86
F903B-11G	♦SOD	360 -112
F903B-12G	♦SOD	360 -145
F903B-13G	♦SOD	360 -176
F903B-14G	♦SOD	360 -181
F903B-15G	♦SOD	360 -211
F903B-16G	♦SOD	360 -214
F903B-18G	♦SOD	361 - 33
F903B-20G	♦SOD	362 -161
F903B-21G	♦SOD	362 -195
F903B-22G	♦SOD	363 - 25
F903B-23G	♦SOD	363 - 68
F903B-24G	♦SOD	363 - 74
F903B-25G	♦SOD	363 -115
F903B-26G	♦SOD	363 -120
F903B-28G	♦SOD	363 -161
F903C-10G	♦SOD	360 - 87
F903C-11G	♦SOD	360 -113
F903C-12G	♦SOD	360 -146
F903C-13G	♦SOD	360 -177
F903C-14G	♦SOD	360 -182
F903C-15	♦SOD	360 -212
F903C-16	♦SOD	360 -215
F903C-18	♦SOD	361 - 34
F903C-20	♦SOD	362 -162
F903C-21	♦SOD	362 -196
F903C-22	♦SOD	363 - 26
F903C-23	♦SOD	363 - 69
F903C-24	♦SOD	363 - 75
F903C-25	♦SOD	363 -116
F903C-26	♦SOD	363 -121
F903C-28	♦SOD	363 -162
F927-11G	♦SOD	423 -157
F927-21G	♦SOD	425 -161
F927-31G	♦SOD	427 -118
F927-41G	♦SOD	428 -108
F927-51G	♦SOD	429 - 88
F927-61G	♦SOD	430 -170
F927-71G	♦SOD	431 -133
FA2320	FSC	435 - 74
FA2330	FSC	435 - 75
FA4320	FSC	435 - 76
FA4330	FSC	435 - 77
FB1001	♦FGRS	367 -156
FB1001L	♦FGRS	367 -157
FB1002	♦FGRS	367 -195
FB1002L	♦FGRS	367 -196
FB1003	♦FGRS	368 - 15
FB1004	♦FGRS	368 - 16
FB1004L	♦FGRS	368 - 17
FB1006	♦FGRS	368 - 54
FB1006L	♦FGRS	368 - 55
FB2500	♦FGRS	369 -180
FB2500L	♦FGRS	369 -181
FB2501	♦FGRS	369 -203
FB2501L	♦FGRS	369 -204
FB2502	♦FGRS	370 - 14
FB2502L	♦FGRS	370 - 15
FB2504	♦FGRS	370 - 51
FB2504L	♦FGRS	370 - 52
FB2506	♦FGRS	370 - 86
FB2506L	♦FGRS	370 - 87
FB3500	♦FGRS	300 -197
FB3501	♦FGRS	300 -207
FB3502	♦FGRS	300 -220
FB3504	♦FGRS	301 - 16
FB3506	♦FGRS	301 - 28
FB5000	FGRS	371 -172
FB5001	FGRS	371 -174
FB5002	FGRS	371 -179
FB5004	FGRS	371 -187
FB5006	FGRS	371 -196
FBP01	♦FGRS	361 -164
FBP02	♦FGRS	361 -197
FBP04	♦FGRS	362 - 33
FBP005	♦FGRS	361 -138
FBP06	♦FGRS	362 - 67
FBP08	♦FGRS	362 - 94
FBP10	♦FGRS	362 -113
FBU4A	♦FGRS	365 - 24
FBU4B	♦FGRS	365 - 44
FBU4D	♦FGRS	365 - 64
FBU4G	♦FGRS	365 - 86
FBU4J	♦FGRS	365 -108
FBU4K	♦FGRS	365 -126
FBU4M	♦FGRS	365 -139

Δ-Registered with JEDEC by this manufacturer

♦-Mfr's data sheet available in microfilm service

1. TYPE No. CROSS INDEX

IN TYPE NUMBER SEQUENCE

TYPE No.	MFRS	Pg&Line
FC13A	♦GTN	369 -124
FC13B	♦GTN	369 -126
FC13C	♦GTN	369 -129
FC13D	♦GTN	369 -133
FC13E	♦GTN	369 -135
FC13F	♦GTN	369 -137
FC13G	♦GTN	369 -138
FC13U	♦GTN	369 -121
FC14A	♦GTN	369 -125
FC14B	♦GTN	369 -127
FC14C	♦GTN	369 -130
FC14D	♦GTN	369 -134
FC14E	♦GTN	403 -106
FC14F	♦GTN	406 -191
FC14G	♦GTN	409 -115
FC14U	♦GTN	369 -122
FC15A	♦GTN	372 -187
FC15B	♦GTN	372 -188
FC15C	♦GTN	372 -189
FC15D	♦GTN	372 -190
FC15E	♦GTN	372 -191
FC15F	♦GTN	372 -192
FC15G	♦GTN	372 -193
FC15U	♦GTN	372 -186
FC210R	SAKJ	238 -202
FC210S	♦SAKJ	297 -118
FC225R	SAKJ	239 -104
FC225S	♦SAKJ	297 -149
FC240R	SAKJ	239 -181
FC240S	♦SAKJ	297 -165
FD2A	FERB	246 - 28
FD2B	FERB	244 -217
FD2RA	FERB	246 - 40
FD2RB	FERB	245 - 14
FD4A	FERB	245 -178
FD4B	FERB	245 - 42
FD4RA	FERB	245 -202
FD4RB	FERB	245 - 50
FD13U	♦GTN	369 -216
FD14A	♦GTN	370 - 28
FD14B	♦GTN	370 - 65
FD14C	♦GTN	370 -100
FD14D	♦GTN	370 -121
FD14E	♦GTN	370 -137
FD14F	♦GTN	370 -142
FD14G	♦GTN	370 -145
FD14U	♦GTN	369 -217
FD15A	♦GTN	373 - 13
FD15B	♦GTN	373 - 20
FD15C	♦GTN	373 - 26
FD15D	♦GTN	373 - 30
FD15E	♦GTN	373 - 33
FD15F	♦GTN	373 - 34
FD15G	♦GTN	373 - 35
FD15U	♦GTN	373 - 7
FD80A4	MITJ	305 - 40
FD80A6	MITJ	305 - 44
FD80A8	MITJ	305 - 49
FD80A10	MITJ	305 - 50
FD100#B	MISI	231 - 99
FD150B4	MITJ	307 - 93
FD150B6	MITJ	307 -128
FD150B8	MITJ	307 -158
FD150B10	MITJ	307 -187
FD200B2	MITJ	309 - 38
FD200B4	MITJ	309 - 46
FD200B8	MITJ	309 - 57
FD200B16	MITJ	309 - 78
FD200T12	MITJ	264 - 11
FD200T16	MITJ	264 - 17
FD200T20	MITJ	264 - 25
FD200T24	MITJ	264 - 33
FD250DM20	MITJ	404 -136
FD250DM24	MITJ	408 - 10
FD250DM28	MITJ	410 - 59
FD250DM32	MITJ	413 - 30
FD250DM36	MITJ	414 - 34
FD250DM40	MITJ	415 -143
FD300	♦FSC	235 - 74
FD333	♦FSC	235 - 75
FD400	♦FSC	236 - 34
FD400DL12	MITJ	311 - 19
FD400DL16	MITJ	311 - 41
FD400DL20	MITJ	404 -179
FD400DL24	MITJ	408 - 58
FD500DH28	MITJ	410 -129
FD500DH32	MITJ	413 - 73
FD500DH36	MITJ	414 - 79
FD500DH40	MITJ	415 -177
FD500DH50	MITJ	418 - 8
FD500DH60	MITJ	419 -209
FD500DV70	MITJ	420 -201
FD500DV80	MITJ	422 - 63
FD500E16	MITJ	311 -182
FD500E20	MITJ	404 -210
FD500E24	MITJ	408 - 94
FD500E28	MITJ	410 -128
FD500E32	MITJ	413 - 72
FD500E36	MITJ	414 - 78
FD500E40	MITJ	415 -175
FD500E50	MITJ	418 - 6
FD500E60	MITJ	419 -207
FD500EV70	MITJ	420 -200
FD500EV80	MITJ	422 - 62
FD500GH50	MITJ	265 -179
FD500GH56	MITJ	265 -161
FD500GV90	MITJ	422 -217
FD600	♦FSC	251 -102
FD600-1	POS	311 - 63
FD600-2	POS	311 - 64
FD600-3	POS	311 - 65
FD600-4	POS	311 - 67
FD600-5	POS	311 - 68
FD600-6	POS	311 - 70

TYPE No.	MFRS	Pg&Line
FD600-7	POS	311 - 71
FD600-8	POS	311 - 74
FD600-9	POS	311 - 75
FD600-10	POS	404 -194
FD600-12	POS	408 - 76
FD600-14	POS	410 -110
FD600-16	POS	413 - 62
FD600-18	POS	414 - 62
FD600-20	POS	415 -162
FD600-22	POS	416 -100
FD600-24	POS	417 - 35
FD600-26	POS	418 - 72
FD600-28	POS	418 -182
FD600-30	POS	419 -199
FD700	♦FSC	244 -200
FD777	♦FSC	244 -100
FD900-1	POS	312 - 4
FD900-2	POS	312 - 10
FD900-3	POS	312 - 11
FD900-4	POS	312 - 18
FD900-5	POS	312 - 19
FD900-6	POS	312 - 25
FD900-7	POS	312 - 26
FD900-8	POS	312 - 36
FD900-9	POS	312 - 37
FD900-10	POS	405 - 7
FD900-12	POS	408 -118
FD900-14	POS	410 -150
FD900-16	POS	413 - 96
FD900-18	POS	414 - 96
FD900-20	POS	415 -197
FD1000A16	MITJ	312 - 33
FD1000A20	MITJ	405 - 5
FD1000A24	MITJ	408 -114
FD1000A28	MITJ	410 -146
FD1000A32	MITJ	413 - 91
FD1000A36	MITJ	414 - 92
FD1000A40	MITJ	415 -191
FD1000A50	MITJ	418 - 17
FD1000A56	MITJ	418 -199
FD1000FH50	MITJ	268 -126
FD1000FH56	MITJ	268 -134
FD1600A16	MITJ	313 - 3
FD1600A20	MITJ	405 - 36
FD1600A24	MITJ	408 -150
FD1600A28	MITJ	410 -182
FD1600A32	MITJ	413 -120
FD1600A36	MITJ	414 -116
FD1600A40	MITJ	415 -220
FD1600A50	MITJ	418 - 41
FD1600BP2	MITJ	312 -217
FD1600BP4	MITJ	312 -218
FD1600BP6	MITJ	312 -219
FD1600BP8	MITJ	313 - 1
FD1600BP10	MITJ	313 - 2
FD1600CU-70	MITJ	420 -215
FD1600CU-80	MITJ	422 - 80
FD1600CV70	MITJ	420 -216
FD1600CV80	MITJ	422 - 81
FD2500AV80	MITJ	422 - 86
FD3500AH56	MITJ	432 - 5
FD3500AH-36	MITJ	414 -137
FD3500AH-40	MITJ	416 - 23
FD3500AH-50	MITJ	418 - 53
FD3500AH-56	MITJ	418 -176
FD3500BP4	MITJ	313 -125
FD3500BP6	MITJ	313 -127
FD3500BP8	MITJ	313 -129
FD3500BP10	MITJ	313 -131
FD3500BP-2	MITJ	313 -124
FD3500BP-4	MITJ	313 -126
FD3500BP-6	MITJ	313 -128
FD3500BP-8	MITJ	313 -130
FD3500BP-10	MITJ	313 -132
FD3500BP-12	MITJ	313 -133
FD6666	♦FSC	246 -139
FDC485B	FSC	231 -217
FDC3070	FSC	247 -119
FDC3600	FSC	246 -125
FDC4376	FSC	244 -142
FDH300	♦FSC	235 -183
FDH333	♦FSC	235 -205
FDH400	♦FSC	235 -184
FDH444	♦FSC	235 -200
FDH600	♦FSC	251 -105
FDH666	♦FSC	251 - 91
FDH900	♦FSC	245 -126
FDH999	♦FSC	245 - 44
FDH1000	♦FSC	236 - 4
FE1A	♦GIC	280 - 8
FE1B	♦GIC	280 - 82
FE1C	♦GIC	280 -124
FE1D	♦GIC	280 -177
FE2A	♦GIC	285 -217
FE2B	♦GIC	286 - 31
FE2C	♦GIC	286 - 41
FE2D	♦GIC	286 - 72
FE3A	♦GIC	287 -192
FE3B	♦GIC	288 - 29
FE3C	♦GIC	288 - 63
FE3D	♦GIC	288 -108
FE5A	♦GIC	290 -117
FE5B	♦GIC	290 -142
FE5C	♦GIC	290 -159
FE5D	♦GIC	290 -178
FE6A	♦GIC	291 -112
FE6B	♦GIC	291 -155
FE6C	♦GIC	291 -186
FE6D	♦GIC	291 -206
FE8A	♦GIC	293 - 63
FE8B	♦GIC	293 - 71
FE8C	♦GIC	293 - 83
FE8D	♦GIC	293 - 85
FE8F	♦GIC	293 - 97

TYPE No.	MFRS	Pg&Line
FE8G	♦GIC	293 -103
FE13U	♦GTN	371 -127
FE14U	♦GTN	371 -128
FE15U	♦GTN	373 - 66
FE16A	♦GIC	296 -182
FE16B	♦GIC	296 -191
FE16C	♦GIC	296 -204
FE16D	♦GIC	296 -209
FE16F	♦GIC	296 -220
FE16G	♦GIC	297 - 6
FE30A	♦GIC	300 - 15
FE30B	♦GIC	300 - 43
FE30C	♦GIC	300 - 61
FE30D	♦GIC	300 - 77
FE30F	♦GIC	300 -100
FE30G	♦GIC	300 -115
FF05	SET	252 - 12
FF10	♦SET	252 -215
FF13U	♦GTN	371 -176
FF14U	♦GTN	371 -177
FF15	SET	253 -164
FF15U	♦GTN	373 - 78
FG13U	♦GTN	372 - 17
FG14U	♦GTN	372 - 18
FG15U	♦GTN	373 - 97
FH1100	♦FSC	437 - 38
FJT1100	♦FSC	234 -206
FJT1101	♦FSC	234 -207
FM50	♦SET	243 -101
FM75	♦SET	243 -103
FMMD914	♦FERB	246 -146
FP25F	♦VMI	417 -172
FP25S	♦VMI	417 -173
FP50F	♦VMI	424 - 4
FP50S	♦VMI	424 - 5
FP75F	♦VMI	425 -195
FP75S	♦VMI	425 -196
FP100F	♦VMI	427 -180
FP100S	♦VMI	427 -181
FP125F	♦VMI	428 -142
FP125S	♦VMI	428 -143
FP150F	♦VMI	429 -141
FP150S	♦VMI	429 -142
FP175F	♦VMI	430 - 30
FP175S	♦VMI	430 - 31
FP200F	♦VMI	430 -195
FP200S	♦VMI	430 -196
FP1009	♦LUCB	343 - 66
FP1009A	♦LUCB	343 - 67
FP1010	♦LUCB	343 - 68
FP1010A	♦LUCB	343 - 69
FP1011	♦LUCB	343 - 70
FP1011A	♦LUCB	343 - 71
FP1012	♦LUCB	343 - 72
FP1012A	♦LUCB	343 - 73
FP1013	♦LUCB	343 - 74
FP1013A	♦LUCB	343 - 75
FP1015	♦LUCB	343 - 76
FP1015A	♦LUCB	343 - 77
FP1016	♦LUCB	343 - 78
FP1016A	♦LUCB	343 - 79
FP1018	♦LUCB	343 - 80
FP1018A	♦LUCB	343 - 81
FP1020	♦LUCB	343 - 82
FP1020A	♦LUCB	343 - 83
FP1022	♦LUCB	343 - 84
FP1022A	♦LUCB	343 - 85
FP1024	♦LUCB	343 - 86
FP1024A	♦LUCB	343 - 87
FP1027	♦LUCB	343 - 88
FP1027A	♦LUCB	343 - 89
FP1030	♦LUCB	343 - 90
FP1030A	♦LUCB	343 - 91
FP1033	♦LUCB	343 - 92
FP1033A	♦LUCB	343 - 93
FP1036	♦LUCB	343 - 94
FP1036A	♦LUCB	343 - 95
FP1039	♦LUCB	343 - 96
FP1039A	♦LUCB	343 - 97
FP1043	♦LUCB	343 - 98
FP1043A	♦LUCB	343 - 99
FP1047	♦LUCB	343 -100
FP1047A	♦LUCB	343 -101
FP1051	♦LUCB	343 -102
FP1051A	♦LUCB	343 -103
FP1056	♦LUCB	343 -104
FP1056A	♦LUCB	343 -105
FP1062	♦LUCB	343 -106
FP1062A	♦LUCB	343 -107
FP1068	♦LUCB	343 -108
FP1068A	♦LUCB	343 -109
FP1075	♦LUCB	343 -110
FP1075A	♦LUCB	344 - 1
FP1082	♦LUCB	344 - 2
FP1082A	♦LUCB	344 - 3
FP1091	♦LUCB	344 - 4
FP1091A	♦LUCB	344 - 5
FP1100	♦LUCB	344 - 6
FP1100A	♦LUCB	344 - 7
FP1110	♦LUCB	344 - 8
FP1110A	♦LUCB	344 - 9
FP1120	♦LUCB	344 - 10
FP1120A	♦LUCB	344 - 11
FP1130	♦LUCB	344 - 12
FP1130A	♦LUCB	344 - 13
FP1140	♦LUCB	344 - 14
FP1150	♦LUCB	344 - 15
FP1150A	♦LUCB	344 - 16
FP1160	♦LUCB	344 - 17
FP1160A	♦LUCB	344 - 18
FP1170	♦LUCB	344 - 19
FP1170A	♦LUCB	344 - 20
FP1180	♦LUCB	344 - 21
FP1180A	♦LUCB	344 - 22

TYPE No.	MFRS	Pg&Line
FP1200	♦LUCB	344 - 23
FP1200A	♦LUCB	344 - 24
FP1220	♦LUCB	344 - 25
FP1220A	♦LUCB	344 - 26
FP1250	♦LUCB	344 - 27
FP1250A	♦LUCB	344 - 28
FP1275	♦LUCB	344 - 29
FP1275A	♦LUCB	344 - 30
FP2009	♦LUCB	344 - 31
FP2009A	♦LUCB	344 - 32
FP2010	♦LUCB	344 - 33
FP2010A	♦LUCB	344 - 34
FP2011	♦LUCB	344 - 35
FP2011A	♦LUCB	344 - 36
FP2012	♦LUCB	344 - 37
FP2012A	♦LUCB	344 - 38
FP2013	♦LUCB	344 - 39
FP2013A	♦LUCB	344 - 40
FP2015	♦LUCB	344 - 41
FP2015A	♦LUCB	344 - 42
FP2016	♦LUCB	344 - 43
FP2016A	♦LUCB	344 - 44
FP2018	♦LUCB	344 - 45
FP2018A	♦LUCB	344 - 46
FP2020	♦LUCB	344 - 47
FP2020A	♦LUCB	344 - 48
FP2022	♦LUCB	344 - 49
FP2022A	♦LUCB	344 - 50
FP2024	♦LUCB	344 - 51
FP2024A	♦LUCB	344 - 52
FP2027	♦LUCB	344 - 53
FP2027A	♦LUCB	344 - 54
FP2030	♦LUCB	344 - 55
FP2030A	♦LUCB	344 - 56
FP2033	♦LUCB	344 - 57
FP2033A	♦LUCB	344 - 58
FP2036	♦LUCB	344 - 59
FP2036A	♦LUCB	344 - 60
FP2039	♦LUCB	344 - 61
FP2039A	♦LUCB	344 - 62
FP2043	♦LUCB	344 - 63
FP2043A	♦LUCB	344 - 64
FP2047	♦LUCB	344 - 65
FP2047A	♦LUCB	344 - 66
FP2051	♦LUCB	344 - 67
FP2051A	♦LUCB	344 - 68
FP2056	♦LUCB	344 - 69
FP2056A	♦LUCB	344 - 70
FP2062	♦LUCB	344 - 71
FP2062A	♦LUCB	344 - 72
FP2068	♦LUCB	344 - 73
FP2068A	♦LUCB	344 - 74
FP2075	♦LUCB	344 - 75
FP2075A	♦LUCB	344 - 76
FP2082	♦LUCB	344 - 77
FP2082A	♦LUCB	344 - 78
FP2091	♦LUCB	344 - 79
FP2091A	♦LUCB	344 - 80
FP2100	♦LUCB	344 - 81
FP2100A	♦LUCB	344 - 82
FP2110	♦LUCB	344 - 83
FP2110A	♦LUCB	344 - 84
FP2120	♦LUCB	344 - 85
FP2120A	♦LUCB	344 - 86
FP2130	♦LUCB	344 - 87
FP2130A	♦LUCB	344 - 88
FP2140	♦LUCB	344 - 89
FP2150	♦LUCB	344 - 90
FP2150A	♦LUCB	344 - 91
FP2160	♦LUCB	344 - 92
FP2160A	♦LUCB	344 - 93
FP2170	♦LUCB	344 - 94
FP2170A	♦LUCB	344 - 95
FP2180	♦LUCB	344 - 96
FP2180A	♦LUCB	344 - 97
FP2200	♦LUCB	344 - 98
FP2200A	♦LUCB	344 - 99
FP2220	♦LUCB	344 -100
FP2220A	♦LUCB	344 -101
FP2250	♦LUCB	344 -102
FP2250A	♦LUCB	344 -103
FP2275	♦LUCB	344 -104
FP2275A	♦LUCB	344 -105
FP3009	♦LUCB	344 -106
FP3009A	♦LUCB	344 -107
FP3010	♦LUCB	344 -108
FP3010A	♦LUCB	344 -109
FP3011	♦LUCB	344 -110
FP3011A	♦LUCB	345 - 1
FP3012	♦LUCB	345 - 2
FP3012A	♦LUCB	345 - 3
FP3013	♦LUCB	345 - 4
FP3013A	♦LUCB	345 - 5
FP3015	♦LUCB	345 - 6
FP3015A	♦LUCB	345 - 7
FP3016	♦LUCB	345 - 8
FP3016A	♦LUCB	345 - 9
FP3018	♦LUCB	345 - 10
FP3018A	♦LUCB	345 - 11
FP3020	♦LUCB	345 - 12
FP3020A	♦LUCB	345 - 13
FP3022	♦LUCB	345 - 14
FP3022A	♦LUCB	345 - 15
FP3024	♦LUCB	345 - 16
FP3024A	♦LUCB	345 - 17
FP3027	♦LUCB	345 - 18
FP3027A	♦LUCB	345 - 19
FP3030	♦LUCB	345 - 20
FP3030A	♦LUCB	345 - 21
FP3033	♦LUCB	345 - 22
FP3033A	♦LUCB	345 - 23
FP3036	♦LUCB	345 - 24
FP3036A	♦LUCB	345 - 25
FP3039	♦LUCB	345 - 26

TYPE No.	MFRS	Pg&Line
FP3039A	♦LUCB	345 - 27
FP3043	♦LUCB	345 - 28
FP3043A	♦LUCB	345 - 29
FP3047	♦LUCB	345 - 30
FP3047A	♦LUCB	345 - 31
FP3051	♦LUCB	345 - 32
FP3051A	♦LUCB	345 - 33
FP3056	♦LUCB	345 - 34
FP3056A	♦LUCB	345 - 35
FP3062	♦LUCB	345 - 36
FP3062A	♦LUCB	345 - 37
FP3068	♦LUCB	345 - 38
FP3068A	♦LUCB	345 - 39
FP3075	♦LUCB	345 - 40
FP3075A	♦LUCB	345 - 41
FP3082	♦LUCB	345 - 42
FP3082A	♦LUCB	345 - 43
FP3091	♦LUCB	345 - 44
FP3091A	♦LUCB	345 - 45
FP3100	♦LUCB	345 - 46
FP3100A	♦LUCB	345 - 47
FP3110	♦LUCB	345 - 48
FP3110A	♦LUCB	345 - 49
FP3120	♦LUCB	345 - 50
FP3120A	♦LUCB	345 - 51
FP3130	♦LUCB	345 - 52
FP3130A	♦LUCB	345 - 53
FP3140	♦LUCB	345 - 54
FP3150	♦LUCB	345 - 55
FP3150A	♦LUCB	345 - 56
FP3160	♦LUCB	345 - 57
FP3160A	♦LUCB	345 - 58
FP3170	♦LUCB	345 - 59
FP3170A	♦LUCB	345 - 60
FP3180	♦LUCB	345 - 61
FP3180A	♦LUCB	345 - 62
FP3200	♦LUCB	345 - 63
FP3200A	♦LUCB	345 - 64
FP3220	♦LUCB	345 - 65
FP3220A	♦LUCB	345 - 66
FP3250	♦LUCB	345 - 67
FP3250A	♦LUCB	345 - 68
FP3275	♦LUCB	345 - 69
FP3275A	♦LUCB	345 - 70
FR061	♦RECT	277 - 83
FR061L	♦RECT	277 - 85
FR062	♦RECT	277 - 97
FR062L	♦RECT	277 - 99
FR063	♦RECT	277 -112
FR063L	♦RECT	277 -114
FR064	♦RECT	277 -137
FR064L	♦RECT	277 -141
FR065	♦RECT	277 -165
FR065L	♦RECT	277 -167
FR066	♦RECT	277 -187
FR066L	♦RECT	277 -188
FR067	♦RECT	277 - 74
FR067L	♦RECT	401 -104
FR101	♦DII	252 - 92
FEC	RECT	
	♦RFE	
FR101G	♦DII	280 - 9
	♦RECT	
FR102	♦DII	253 - 59
FEC	RECT	
	♦RFE	
FR102G	♦DII	280 - 83
	♦RECT	
FR103	♦DII	254 - 51
FEC	RECT	
	♦RFE	
FR103G	♦DII	280 -178
	♦RECT	
FR104	♦DII	254 -180
FEC	RECT	
	♦RFE	
FR104G	♦DII	281 - 82
	♦RECT	
FR105	♦DII	255 -108
FEC	RECT	
	♦RFE	
FR105G	♦DII	281 -197
	♦RECT	
FR106	♦DII	255 -197
FEC	RECT	
	♦RFE	
FR106G	♦DII	282 - 62
	♦RECT	
FR107	♦DII	256 - 47
FEC	RECT	
	♦RFE	
FR107G	♦DII	401 -194
	♦RECT	
FR151	♦DII	238 - 95
RECT	♦RFE	
FR151G	♦DII	283 - 99
	♦RECT	
FR152	♦DII	238 -163
RECT	♦RFE	
FR152G	♦DII	283 -154
	♦RECT	
FR153	♦DII	239 - 39
RECT	♦RFE	
FR153G	♦DII	283 -220
	♦RECT	
FR154	♦DII	239 -145
RECT	♦RFE	
FR154G	♦DII	284 -107
	♦RECT	
FR155	♦DII	240 - 5
RECT	♦RFE	
FR155G	♦DII	284 -209
	♦RECT	

Δ-Registered with JEDEC by this manufacturer

♦-Mfr's data sheet available in microfilm service

1. TYPE No. CROSS INDEX

IN TYPE NUMBER SEQUENCE

TYPE No.	MFRS	Pg&Line
FR156	♦DII	240 - 79
RECT	♦RFE	
FR156G	♦DII	285 - 67
	♦RECT	
FR157	♦DII	240 -124
RECT	♦RFE	
FR157G	♦DII	402 - 68
	♦RECT	
FR201	♦DII	285 -212
	♦RECT	
FR201G	♦DII	285 -218
	♦RECT	
FR202	♦DII	286 - 26
	♦RECT	
FR202G	♦DII	286 - 32
	♦RECT	
FR203	♦DII	286 - 67
	♦RECT	
FR203G	♦DII	286 - 73
	♦RECT	
FR204	♦DII	286 -117
	♦RECT	
FR204G	♦DII	286 -122
	♦RECT	
FR205	♦DII	286 -165
	♦RECT	
FR205G	♦DII	286 -171
	♦RECT	
FR206	♦DII	286 -202
	♦RECT	
FR206G	♦DII	286 -206
	♦RECT	
FR207	♦DII	402 -113
	♦RECT	
FR207G	♦DII	402 -120
	♦RECT	
FR251	♦DII	286 -216
	♦RECT	
FR251G	♦RECT	286 -220
FR252	♦DII	287 - 10
	♦RECT	
FR252G	♦RECT	287 - 18
FR253	♦DII	287 - 29
	♦RECT	
FR253G	♦RECT	287 - 39
FR254	♦DII	287 - 57
	♦RECT	
FR254G	♦RECT	287 - 68
FR255	♦DII	287 - 86
	♦RECT	
FR255G	♦RECT	287 - 95
FR256	♦DII	287 -112
	♦RECT	
FR256G	♦RECT	287 -123
FR257	♦DII	402 -129
	♦RECT	
FR257G	♦RECT	402 -141
FR301	♦DII	252 - 93
FEC	♦RECT	
	♦RFE	
FR301G	♦DII	287 -193
	♦RECT	
FR302	♦DII	253 - 60
FEC	♦RECT	
	♦RFE	
FR302G	♦DII	288 - 30
	♦RECT	
FR303	♦DII	254 - 52
FEC	♦RECT	
	♦RFE	
FR303G	♦DII	288 -109
	♦RECT	
FR304	♦DII	254 -181
FEC	♦RECT	
	♦RFE	
FR304G	♦DII	288 -207
	♦RECT	
FR305	♦DII	255 -109
FEC	♦RECT	
	♦RFE	
FR305G	♦DII	289 - 73
	♦RECT	
FR306	♦DII	255 -198
FEC	♦RECT	
	♦RFE	
FR306G	♦DII	289 -141
	♦RECT	
FR307	♦DII	256 - 48
FEC	♦RECT	
	♦RFE	
FR307G	♦DII	402 -175
	♦RECT	
FR501	♦DII	250 - 95
FR501G	♦DII	238 - 96
FR502	♦DII	238 -164
FR502G	♦DII	238 -165
FR503	♦DII	239 - 40
FR503G	♦DII	239 - 41
FR504	♦DII	239 -146
FR504G	♦DII	239 -147
FR505	♦DII	240 - 6
FR505G	♦DII	240 - 7
FR506	♦DII	240 - 80
FR506G	♦DII	240 - 81
FR507	♦DII	240 -125
FR601	♦DII	291 -107
♦RECT	♦RFE	
FR601G	♦DII	291 -113
	♦RECT	
FR602	♦DII	291 -150
♦RECT	♦RFE	
FR602G	♦DII	291 -156
	♦RECT	

TYPE No.	MFRS	Pg&Line
FR603	♦DII	291 -201
♦RECT	♦RFE	
FR603G	♦DII	291 -207
	♦RECT	
FR604	♦DII	292 - 49
♦RECT	♦RFE	
FR604G	♦DII	292 - 54
	♦RECT	
FR605	♦DII	292 -108
♦RECT	♦RFE	
FR605G	♦DII	292 -112
	♦RECT	
FR606	♦DII	292 -159
♦RECT	♦RFE	
FR606G	♦DII	292 -163
	♦RECT	
FR607	♦DII	403 - 6
RECT	♦RFE	
FR607G	♦DII	403 - 10
	♦RECT	
FR801	♦DII	293 - 67
	♦RECT	
FR802	♦DII	293 - 74
	♦RECT	
FR803	♦DII	293 - 88
	♦RECT	
FR804	♦DII	293 -107
	♦RECT	
FR805	♦DII	293 -118
	♦RECT	
FR806	♦DII	293 -126
	♦RECT	
FR807	♦DII	403 - 38
	♦RECT	
FRM3205CC	♦FSC	262 -208
FRM3210CC	♦FSC	262 -212
FRM3215CC	♦FSC	262 -216
FRM3220CC	♦FSC	262 -218
FRP1005	♦FSC	262 - 89
FRP1010	♦FSC	262 - 93
FRP1015	♦FSC	262 - 98
FRP1020	♦FSC	262 -100
FRP1605	♦FSC	262 -209
FRP1605CC	♦FSC	262 - 80
FRP1610	♦FSC	262 -213
FRP1610CC	♦FSC	262 - 81
FRP1615	♦FSC	262 -217
FRP1615CC	♦FSC	262 - 83
FRP1620	♦FSC	262 -219
FRP1620CC	♦FSC	262 - 84
FRP2005CC	♦FSC	262 - 90
FRP2010CC	♦FSC	262 - 94
FRP2015CC	♦FSC	262 - 99
FRP2020CC	♦FSC	262 -101
FRR80-3	♦DIT	298 -105
FS19	MISI	274 - 52
FS36	MISI	262 - 86
FSA1410M	♦FSC	314 - 73
FSA1411M	♦FSC	314 - 74
FSA2002M	♦FSC	314 - 75
FSA2003M	♦FSC	314 - 76
FSA2500M	♦FSC	314 - 77
FSA2501M	♦FSC	314 - 78
FSA2501P	♦FSC	314 - 79
FSA2502M	♦FSC	314 - 80
FSA2503M	♦FSC	314 - 81
FSA2503P	♦FSC	314 - 82
FSA2504M	♦FSC	314 - 83
FSA2509M	♦FSC	314 - 84
FSA2509P	♦FSC	314 - 85
FSA2510M	♦FSC	314 - 86
FSA2510P	♦FSC	314 - 87
FSA2563M	♦FSC	314 - 88
FSA2563P	♦FSC	314 - 89
FSA2564M	♦FSC	314 - 90
FSA2564P	♦FSC	314 - 91
FSA2565M	♦FSC	314 - 25
FSA2565P	♦FSC	314 - 92
FSA2566M	♦FSC	314 - 93
FSA2566P	♦FSC	314 - 94
FSA2619M	♦FSC	314 - 95
FSA2619P	♦FSC	314 - 96
FSA2620M	♦FSC	314 - 97
FSA2620P	♦FSC	314 - 98
FSA2621M	♦FSC	314 - 99
FSA2702M	♦FSC	314 - 69
FSA2703M	♦FSC	314 - 70
FSA2704M	♦FSC	314 - 71
FSA2705M	♦FSC	314 - 72
FSA2719M	FSC	314 -100
FSA2719P	FSC	314 -101
FSA2720M	FSC	314 -102
FSA2720P	FSC	314 -103
FSA2721M	FSC	314 -104
FST6035	♦COO	375 -187
FST6040	♦COO	375 -189
FST6045	♦COO	375 -190
FST6050	♦COO	375 -191
FST16035	♦COO	375 -212
FST16040	♦COO	375 -213
FST16045	♦COO	375 -214
FST16050	♦COO	375 -215
FST20035	♦COO	375 -220
FST20040	♦COO	376 - 4
FST20045	♦COO	376 - 8
FST20050	♦COO	376 - 12
FST30035	♦COO	376 - 14
FST30040	♦COO	376 - 16
FST30045	♦COO	376 - 17
FST30050	♦COO	376 - 19
FSY07	♦FGRS	345 - 71
FWL50	♦SCN	361 -151
FWL100	♦SCN	361 -175
FWL200	♦SCN	362 - 9

TYPE No.	MFRS	Pg&Line
FWL300	♦SCN	362 - 15
FWL400	♦SCN	362 - 46
FWL500	♦SCN	362 - 50
FWL600	♦SCN	362 - 79
FWL700	♦SCN	362 - 80
FWL800	♦SCN	362 -105
FWL1000	♦SCN	362 -123
FWLA50	♦SCN	362 -193
FWLA100	♦SCN	363 - 23
FWLA200	♦SCN	363 - 66
FWLA300	♦SCN	363 - 72
FWLA400	♦SCN	363 -113
FWLA500	♦SCN	363 -118
FWLA600	♦SCN	363 -158
FWLA700	♦SCN	363 -159
FWLA800	♦SCN	363 -196
FWLA1000	♦SCN	364 - 6
FWLC50	♦SCN	365 - 10
FWLC100	♦SCN	365 - 26
FWLC200	♦SCN	365 - 49
FWLC300	♦SCN	365 - 67
FWLC400	♦SCN	365 - 72
FWLC500	♦SCN	365 - 89
FWLC600	♦SCN	365 - 91
FWLC700	SCN	365 -110
FWLC800	♦SCN	365 -112
FWLC1000	♦SCN	365 -128
FWLD50	♦SCN	366 - 35
FWLD100	♦SCN	366 - 58
FWLD200	♦SCN	366 - 84
FWLD300	♦SCN	366 - 95
FWLD400	♦SCN	366 -113
FWLD500	♦SCN	366 -123
FWLD600	♦SCN	366 -141
FWLD700	♦SCN	366 -152
FWLD800	♦SCN	366 -168
FWLD1000	♦SCN	366 -188
G1A	♦GIC	252 -127
G1B	♦GIC	253 - 98
G1D	♦GIC	254 - 91
G1G	♦GIC	255 - 7
G1J	♦GIC	255 -128
G1K	♦GIC	255 -207
G1M	♦GIC	256 - 60
G2A	♦GIC	252 -128
G2B	♦GIC	253 - 99
G2D	♦GIC	254 - 92
G2G	♦GIC	255 - 8
G2J	♦GIC	255 -129
G2K	♦GIC	255 -208
G2M	♦GIC	256 - 61
G3A3	EDL	300 - 26
G3A	♦GIC	252 -131
G3B3	EDL	300 - 56
G3B	♦GIC	253 -102
G3C3	EDL	300 - 92
G3D3	EDL	300 - 96
G3D	♦GIC	254 - 95
G3E3	EDL	300 -106
G3F3	EDL	300 -108
G3G3	EDL	300 -130
G3G	♦GIC	255 - 11
G3H3	EDL	300 -137
G3J	♦GIC	255 -135
G3K3	EDL	300 -152
G3K	♦GIC	255 -212
G3M3	EDL	300 -154
G3M	♦GIC	256 - 65
G3N3	EDL	300 -168
G4A3	EDL	301 - 99
G4A	♦GIC	287 -197
G4B3	EDL	301 -119
G4B	♦GIC	288 - 37
G4C3	EDL	301 -149
G4D3	EDL	301 -153
G4D	♦GIC	288 -116
G4E3	EDL	301 -167
G4F3	EDL	301 -172
G4G3	EDL	301 -194
G4G	♦GIC	288 -214
G4H3	EDL	301 -205
G4J	♦GIC	289 - 76
G4K3	EDL	302 - 11
G4K	♦GIC	289 -144
G4M3	EDL	302 - 17
G4M	♦GIC	402 -178
G4N3	EDL	302 - 40
G5A3	EDL	274 - 4
G5B3	EDL	274 - 7
G5C3	EDL	274 - 19
G5D3	EDL	274 - 20
G5E3	EDL	274 - 23
G5F3	EDL	274 - 24
G5G3	EDL	274 - 29
G5H3	EDL	274 - 30
G5K3	EDL	274 - 31
G5M3	EDL	274 - 33
G5N3	EDL	274 - 34
G6A3	EDL	307 - 41
G6B3	EDL	307 - 63
G6C3	EDL	307 - 94
G6D3	EDL	307 -115
G6E3	EDL	307 -129
G6F3	EDL	307 -143
G6G3	EDL	307 -160
G6H3	EDL	307 -188
G6K3	EDL	307 -205
G6M3	EDL	308 - 11
G6N3	EDL	308 - 30
G6P3	EDL	404 - 95
G6R3	EDL	407 -187
G6S3	EDL	411 -164
G15R4	GPD	296 - 20
G30R4	GPD	299 -204

TYPE No.	MFRS	Pg&Line
G60R4	GPD	303 - 60
G129	♦APD	163 - 10
	♦UNI	
G130	♦APD	163 - 20
	♦UNI	
G200R4	♦GPD	308 -152
G200R4SB	♦GPD	308 -153
G500R2	♦GPD	311 - 97
G775-0U	♦SOD	369 -171
G775-1U	♦SOD	369 -194
G775-2U	♦SOD	370 - 2
G775-3U	♦SOD	370 - 35
G775-4U	♦SOD	370 - 39
G775-6U	♦SOD	370 - 74
G775-8U	♦SOD	370 -104
GD1E	♦SIEG	233 -136
GD1P	♦SIEG	233 -137
GD1Q	♦SIEG	233 - 62
GD2E	♦SIEG	233 - 93
GD3E	♦SIEG	233 - 94
GD4E	♦SIEG	233 - 95
GD5E	♦SIEG	233 -141
GD6E	♦SIEG	233 - 96
GD8E	♦SIEG	233 -205
GD11E	♦SIEG	231 - 80
GD12E	♦SIEG	231 - 46
GD13E	SIEG	233 - 80
GD30R4	♦GPD	300 - 3
GD60R4	♦GPD	303 - 71
GD72E3	♦SIEG	232 -150
GD72E4	♦SIEG	232 -151
GD72E5	♦SIEG	232 -152
GD73E3	♦SIEG	232 -153
GD73E4	♦SIEG	232 -154
GD73E5	♦SIEG	232 -155
GD74E3	SIEG	231 - 47
GD74E4	SIEG	231 - 48
GD74E5	SIEG	231 - 49
GD107A	USSR	274 - 48
GD507A	USSR	248 - 92
GD508A	USSR	244 - 34
GD800-1	POS	311 -186
GD800-2	POS	311 -187
GD800-3	POS	311 -188
GD800-4	POS	311 -189
GD800-5	POS	311 -190
GD800-6	POS	311 -191
GD800-7	POS	311 -192
GD800-8	POS	311 -193
GD800-9	POS	311 -194
GD800-10	POS	404 -215
GD800-12	POS	408 - 99
GD800-14	POS	410 -133
GD800-16	POS	413 - 77
GD800-18	POS	414 - 83
GD800-20	POS	415 -181
GD800-22	POS	416 -114
GD800-24	POS	417 - 49
GD800-26	POS	418 - 84
GD800-28	POS	418 -191
GD800-30	POS	419 -212
GD1400-1	POS	312 -125
GD1400-2	POS	312 -128
GD1400-3	POS	312 -131
GD1400-4	POS	312 -134
GD1400-5	POS	312 -137
GD1400-6	POS	312 -140
GD1400-7	POS	312 -143
GD1400-8	POS	312 -146
GD1400-9	POS	312 -149
GD1400-10	POS	405 - 25
GD1400-12	POS	408 -140
GD1400-14	POS	410 -170
GD1400-16	POS	413 -113
GD1400-18	POS	414 -109
GD1400-20	POS	415 -210
GE1001(A)	♦GESY	238 - 78
GE1002(A)	♦GESY	238 -145
GE1003(A)	♦GESY	238 -218
GE1004(A)	♦GESY	239 - 35
GE1101(A)	♦GESY	238 - 79
GE1102(A)	♦GESY	238 -146
GE1103(A)	♦GESY	239 - 1
GE1104(A)	♦GESY	239 - 36
GE1301(A)	♦GESY	238 - 82
GE1302(A)	♦GESY	238 -148
GE1303(A)	♦GESY	239 - 3
GE1304(A)	♦GESY	239 - 37
GER4001	GDC	280 - 20
	♦GESY	
GER4002	GDC	280 - 97
	♦GESY	
GER4003	GDC	280 -195
	♦GESY	
GER4004	GDC	281 -100
	♦GESY	
GER4005	GDC	281 -213
	♦GESY	
GER4006	GDC	282 - 77
	♦GESY	
GER4007	GDC	401 -209
	♦GESY	
GEX541	♦MULB	293 -218
♦PHIN	♦RTCF	
	♦VALG	
GEX542	♦MULB	294 - 28
♦PHIN	♦RTCF	
	♦VALG	
GFA03L	♦TSAJ	401 - 73
GFA03R	♦TSAJ	411 - 29
GFB30B	♦TSAJ	285 -101
GFB30C	♦TSAJ	285 -118
GFB30E	♦TSAJ	285 -135
GFB30G	♦TSAJ	285 -152

TYPE No.	MFRS	Pg&Line
GFD10B	♦TSAJ	280 - 72
GFD10C	♦TSAJ	280 -164
GFD10E	♦TSAJ	281 - 71
GFD10G	♦TSAJ	281 -187
GFE10	♦TSAJ	411 - 71
GH-1E	SAKJ	408 -180
GH-1F	SAKJ	411 - 72
GH-3E	SAKJ	408 -193
GH-3F	SAKJ	411 - 92
GHV2	♦GSE	345 - 72
GHV3	♦GSE	345 - 73
GHV4	♦GSE	345 - 74
GHV5	♦GSE	345 - 75
GHV06SS	SAKJ	240 -191
GHV6	♦GSE	345 - 76
GHV7	♦GSE	345 - 77
GHV8	♦GSE	345 - 78
GHV-06SSN	SAKJ	424 -120
GHV-10SS	SAKJ	427 - 1
GHV-10SSN	SAKJ	427 - 2
GHV-12SS	SAKJ	428 - 23
GHV-12SSN	SAKJ	428 - 24
GHV-14SS	SAKJ	428 -178
GHV-14SSN	SAKJ	428 -180
GHV-16SSN	SAKJ	429 -169
GHV-18SS	SAKJ	430 - 93
GHV-18SSN	SAKJ	430 - 95
GI250-1	GIC	401 - 67
GI250-2	GIC	415 - 11
GI250-3	GIC	419 -102
GI250-4	GIC	421 -186
GI250-5	GIC	423 -132
GI500	♦GIC	287 -202
GI501	♦GIC	288 - 44
GI502	♦GIC	288 -124
GI504	♦GIC	289 - 3
GI506	♦GIC	289 - 85
GI508	♦GIC	289 -154
GI510	♦GIC	402 -186
GI750	♦GIC	291 -118
GI751	♦GIC	291 -161
GI752	♦GIC	291 -212
GI754	♦GIC	292 - 59
GI756	♦GIC	292 -117
GI758	♦GIC	292 -168
GI810	♦GIC	257 -200
GI811	♦GIC	258 -145
GI812	♦GIC	259 -149
GI814	♦GIC	260 -108
GI816	♦GIC	261 - 26
GI817	♦GIC	261 - 89
GI818	♦GIC	261 -141
GI820	♦GIC	257 -162
GI821	♦GIC	258 - 83
GI822	♦GIC	259 - 81
GI824	♦GIC	260 - 48
GI826	♦GIC	260 -177
GI828	GIC	261 - 53
GI850	♦GIC	257 -163
GI851	♦GIC	258 - 84
GI852	♦GIC	259 - 82
GI854	♦GIC	260 - 49
GI856	♦GIC	260 -178
GI910	♦GIC	257 -201
GI911	♦GIC	258 -146
GI912	♦GIC	259 -150
GI914	♦GIC	260 -109
GI916	♦GIC	261 - 27
GI917	♦GIC	261 - 90
GI918	♦GIC	261 -142
GI1001	GIC	252 - 18
GI1002	GIC	252 -202
GI1003	GIC	253 -170
GI1004	GIC	254 - 14
GI1101	GIC	252 - 19
GI1102	GIC	252 -203
GI1103	GIC	253 -171
GI1104	GIC	254 - 15
GI1301	♦GIC	272 -181
GI1302	♦GIC	272 -182
GI1303	♦GIC	272 -184
GI1304	♦GIC	272 -185
GI1401	♦GIC	271 -138
GI1402	♦GIC	271 -155
GI1403	♦GIC	271 -172
GI1404	♦GIC	271 -174
GI2401	♦GIC	271 -139
GI2402	♦GIC	271 -156
GI2403	♦GIC	271 -173
GI2404	♦GIC	272 - 1
GI2601	♦GIC	252 - 40
GI2602	♦GIC	253 - 5
GI2603	♦GIC	253 -190
GI2604	♦GIC	254 - 20
GI2605	♦GIC	254 -111
GI2606	♦GIC	254 -152
GI5823	GIC	290 - 99
GI5824	GIC	290 -103
GI5825	GIC	290 -105
GIB2500	♦GIC	369 -182
GIB2501	♦GIC	369 -205
GIB2502	♦GIC	370 - 16
GIB2504	♦GIC	370 - 53
GIB2506	♦GIC	370 - 88
GIB2508	♦GIC	370 -111
GIB2510	♦GIC	370 -128
GIB3500	♦GIC	371 - 16
GIB3501	♦GIC	371 - 35
GIB3502	♦GIC	371 - 55
GIB3504	♦GIC	371 - 72
GIB3506	♦GIC	371 - 88
GIB3508	♦GIC	371 -104
GIB3510	♦GIC	371 -116
GL41A(A)	♦GIC	280 - 21

Δ-Registered with JEDEC by this manufacturer

♦-Mfr's data sheet available in microfilm service

1. TYPE No. CROSS INDEX

IN TYPE NUMBER SEQUENCE

TYPE No.	MFRS	Pg&Line
GL41B	♦GIC	280 - 98
GL41D	♦GIC	280 -196
GL41G	♦GIC	281 -101
GL41J	♦GIC	281 -214
GL41K	♦GIC	282 - 78
GL41M	♦GIC	401 -210
GLA28,A,B	♦CODI	165 - 30
GLA31,A,B	♦CODI	165 -154
GLA35,A,B	♦CODI	166 -136
GLA39,A,B	♦CODI	167 -206
GLA43,A,B	♦CODI	169 - 20
GLA47,A,B	♦CODI	170 - 69
GLA51,A,B	♦CODI	171 -149
GLA56,A,B	♦CODI	173 - 29
GLA62,A,B	♦CODI	175 - 93
GLA68,A,B	♦CODI	178 - 65
GLA75,A,B	♦CODI	180 - 61
GLA82,A,B	♦CODI	182 - 43
GLA91,A,B	♦CODI	185 - 79
GLA100,A,B	♦CODI	187 -127
GLT12	THEF	345 - 79
GLT24	THEF	345 - 80
GLT47	THEF	345 - 81
GLT120	THEF	345 - 82
GM3Y	SAKJ	287 -142
GM30A	♦GIC	300 - 16
GM30B	♦GIC	300 - 44
GM30D	♦GIC	300 - 78
GM30G	♦GIC	300 -116
GM30J	♦GIC	300 -142
GM30K	♦GIC	300 -157
GM30M	♦GIC	403 -150
GM-1	♦SAKJ	283 - 44
GM-1A	♦SAKJ	283 - 49
GM-1B	♦SAKJ	283 - 53
GM-1C	♦SAKJ	402 - 33
GM-1Z	♦SAKJ	283 - 41
GM-3	♦SAKJ	287 - 58
GM-3A	♦SAKJ	287 - 87
GM-3B	♦SAKJ	287 -113
GM-3C	♦SAKJ	402 -130
GM-3Z	♦SAKJ	287 - 30
GMA01	TSAJ	246 - 29
GMP5	♦GSE	323 - 59
	♦THEF	
GMP5A	♦GSE	323 - 60
	♦THEF	
GMP5B	♦GSE	323 - 61
	♦THEF	
GP10A	♦GIC	248 -105
GP10B	♦GIC	248 -113
GP10D	♦GIC	248 -119
GP10G	♦GIC	248 -127
GP10J	♦GIC	248 -135
GP10K	♦GIC	248 -138
GP10M	♦GIC	248 -145
GP10N	GIC	405 - 66
GP10Q	GIC	406 - 55
GP10T	GIC	408 -182
GP10V	GIC	409 - 73
GP10W	GIC	411 - 80
GP10Y	GIC	412 - 46
GP15A	♦GIC	252 -129
GP15B	♦GIC	253 -100
GP15D	♦GIC	254 - 93
GP15G	♦GIC	255 - 9
GP15J	♦GIC	255 -130
GP15K	♦GIC	255 -209
GP15M	♦GIC	256 - 62
GP20A	♦GIC	252 -130
GP20B	♦GIC	253 -101
GP20D	♦GIC	254 - 94
GP20G	♦GIC	255 - 10
GP20J	♦GIC	255 -134
GP20K	♦GIC	255 -211
GP20M	♦GIC	256 - 64
GP25A	GIC	287 - 1
GP25B	GIC	287 - 19
GP25D	GIC	287 - 40
GP25G	GIC	287 - 69
GP25J	GIC	287 - 96
GP25K	GIC	287 -124
GP25M	GIC	402 -142
GP30A	♦GIC	252 -132
GP30B	♦GIC	253 -103
GP30D	♦GIC	254 - 96
GP30G	♦GIC	255 - 12
GP30J	♦GIC	255 -136
GP30K	♦GIC	255 -213
GP30M	♦GIC	256 - 66
GP80A	♦GIC	293 - 64
GP80B	♦GIC	293 - 72
GP80D	♦GIC	293 - 86
GP80G	♦GIC	293 -104
GP80J	♦GIC	293 -115
GP80K	♦GIC	293 -123
GP80M	♦GIC	403 - 35
GP600	♦DIX	291 -104
GP601	♦DIX	291 -147
GP602	♦DIX	291 -197
GP604	♦DIX	292 - 44
GP606	♦DIX	292 -103
GP608	♦DIX	292 -155
GP610	♦DIX	403 - 2
GPP1A	♦GIC	280 - 22
GPP1B	♦GIC	280 - 99
GPP1D	♦GIC	280 -197
GPP1G	♦GIC	281 -102
GPP1J	♦GIC	281 -215
GPP1K	♦GIC	282 - 79
GPP1M	♦GIC	401 -211
GPP5A	♦GIC	290 -125
GPP5B	♦GIC	290 -153
GPP5D	♦GIC	290 -191

TYPE No.	MFRS	Pg&Line
GPP5G	♦GIC	291 - 20
GPP5J	♦GIC	291 - 54
GPP5K	♦GIC	291 - 76
GPP5M	♦GIC	402 -213
GR612	THEF	261 - 5
GR812	THEF	261 - 76
GS13	THEF	288 - 31
GS23	THEF	288 -110
GS43	THEF	288 -208
GS63	THEF	255 -110
GS83	THEF	255 -184
GS103	THEF	256 - 49
GS5628	THEF	237 - 75
GSA15B	TSAJ	283 -169
GSA15C	TSAJ	284 - 17
GSA15E	TSAJ	284 -124
GSA15G	TSAJ	285 - 8
GSA30B	TSAJ	288 - 14
GSA30C	TSAJ	288 - 90
GSA30E	TSAJ	288 -188
GSA30G	TSAJ	289 - 53
GSA30J	TSAJ	289 -125
GSB10B	TSAJ	280 -104
GSB10C	TSAJ	280 -201
GSB10E	TSAJ	281 -107
GSB10G	TSAJ	282 - 1
GSB10J	TSAJ	282 - 86
GSB10L	TSAJ	401 -219
GSV101	♦GSE	442 - 57
GSV102	♦GSE	442 - 58
GSV103	♦GSE	442 - 59
GSZ2.7	♦SELI	164 -155
GSZ2.7A	♦SELI	164 -152
GSZ3.0	♦SELI	165 - 87
GSZ3.0A	♦SELI	165 - 82
GSZ3.3	♦SELI	166 - 21
GSZ3.3A	♦SELI	166 - 12
GSZ3.6	♦SELI	166 -197
GSZ3.6A	♦SELI	166 -189
GSZ3.9	♦SELI	167 -162
GSZ3.9A	♦SELI	167 -154
GSZ4.3	♦SELI	168 -161
GSZ4.3A	♦SELI	168 -170
GSZ4.7	♦SELI	170 - 20
GSZ4.7A	♦SELI	170 - 3
GSZ5.1	♦SELI	171 -102
GSZ5.1A	♦SELI	171 - 85
GSZ5.6	♦SELI	172 -192
GSZ5.6A	♦SELI	172 -173
GSZ6.2	♦SELI	175 - 43
GSZ6.2A	♦SELI	175 - 44
GSZ6.8	♦SELI	178 - 12
GSZ6.8A	♦SELI	177 -211
GSZ7.5	♦SELI	180 - 10
GSZ7.5A	♦SELI	179 -198
GSZ8.2	♦SELI	181 -194
GSZ8.2A	♦SELI	181 -177
GSZ9.1	♦SELI	185 - 24
GSZ9.1A	♦SELI	185 - 9
GSZ10	♦SELI	187 - 69
GSZ10A	♦SELI	187 - 52
GSZ11	♦SELI	189 - 12
GSZ11A	♦SELI	188 -205
GSZ12	♦SELI	190 -181
GSZ12A	♦SELI	190 -169
GSZ13	♦SELI	192 -147
GSZ13A	♦SELI	192 -139
GSZ15	♦SELI	194 -170
GSZ15A	♦SELI	194 -163
GSZ16	♦SELI	196 - 75
GSZ16A	♦SELI	196 - 67
GSZ18	♦SELI	198 - 82
GSZ18A	♦SELI	198 - 72
GT6102	♦THEF	323 - 62
GT6102A	♦THEF	323 - 63
GT6103	♦THEF	323 - 64
GT6103A	♦THEF	323 - 65
GT6104	♦THEF	323 - 66
GT6104A	♦THEF	323 - 67
GT6105	♦THEF	323 - 68
GT6105A	♦THEF	323 - 69
GT6106	♦THEF	323 - 70
GT6106A	♦THEF	323 - 71
GT6107	♦THEF	323 - 72
GT6107A	♦THEF	323 - 73
GT6108	♦THEF	323 - 74
GT6108A	♦THEF	323 - 75
GT6109	♦THEF	323 - 76
GT6109A	♦THEF	323 - 77
GT6110	♦THEF	323 - 78
GT6110A	♦THEF	323 - 79
GT6111	♦THEF	323 - 80
GT6111A	♦THEF	323 - 81
GT6112	♦THEF	323 - 82
GT6112A	♦THEF	323 - 83
GT6113	♦THEF	323 - 84
GT6113A	♦THEF	323 - 85
GT6114	♦THEF	323 - 86
GT6114A	♦THEF	323 - 87
GT6115	♦THEF	323 - 88
GT6115A	♦THEF	323 - 89
GT6116	♦THEF	323 - 90
GT6116A	♦THEF	323 - 91
GT6117	♦THEF	323 - 92
GT6117A	♦THEF	323 - 93
GT6118	♦THEF	323 - 94
GT6118A	♦THEF	323 - 95
GT6119	♦THEF	323 - 96
GT6119A	♦THEF	323 - 97
GT6120	♦THEF	323 - 98
GT6120A	♦THEF	323 - 99
GT6121	♦THEF	323 -100
GT6121A	♦THEF	323 -101
GT6122	♦THEF	323 -102

TYPE No.	MFRS	Pg&Line
GT6122A	♦THEF	323 -103
GT6123	♦THEF	323 -104
GT6123A	♦THEF	323 -105
GT6124	♦THEF	323 -106
GT6124A	♦THEF	323 -107
GT6125	♦THEF	323 -108
GT6125A	♦THEF	323 -109
GT6126	♦THEF	323 -110
GT6126A	♦THEF	324 - 1
GT6127	♦THEF	324 - 2
GT6127A	♦THEF	324 - 3
GT6128	♦THEF	324 - 4
GT6128A	♦THEF	324 - 5
GT6129	♦THEF	324 - 6
GT6129A	♦THEF	324 - 7
GT6130	♦THEF	324 - 8
GT6130A	♦THEF	324 - 9
GT6131	♦THEF	324 - 10
GT6131A	♦THEF	324 - 11
GT6132	♦THEF	324 - 12
GT6132A	♦THEF	324 - 13
GT6133	♦THEF	324 - 14
GT6133A	♦THEF	324 - 15
GT6134	♦THEF	324 - 16
GT6134A	♦THEF	324 - 17
GT6135	♦THEF	324 - 18
GT6135A	♦THEF	324 - 19
GT6136	♦THEF	324 - 20
GT6136A	♦THEF	324 - 21
GT6137	♦THEF	324 - 22
GT6137A	♦THEF	324 - 23
GT6138	♦THEF	324 - 24
GT6138A	♦THEF	324 - 25
GT6139	♦THEF	324 - 26
GT6139A	♦THEF	324 - 27
GT6140	♦THEF	324 - 28
GT6140A	♦THEF	324 - 29
GT6141	♦THEF	324 - 30
GT6141A	♦THEF	324 - 31
GT6142	♦THEF	324 - 32
GT6142A	♦THEF	324 - 33
GT6143	♦THEF	324 - 34
GT6143A	♦THEF	324 - 35
GT6144	♦THEF	324 - 36
GT6144A	♦THEF	324 - 37
GT6145	♦THEF	324 - 38
GT6145A	♦THEF	324 - 39
GT6146	♦THEF	324 - 40
GT6146A	♦THEF	324 - 41
GT6147	♦THEF	324 - 42
GT6147A	♦THEF	324 - 43
GT6148	♦THEF	324 - 44
GT6148A	♦THEF	324 - 45
GT6149	♦THEF	324 - 46
GT6149A	♦THEF	324 - 47
GT6150	♦THEF	324 - 48
GT6150A	♦THEF	324 - 49
GT6151	♦THEF	324 - 50
GT6151A	♦THEF	324 - 51
GT6152	♦THEF	324 - 52
GT6152A	♦THEF	324 - 53
GT6153	♦THEF	324 - 54
GT6153A	♦THEF	324 - 55
GT6154	♦THEF	324 - 56
GT6154A	♦THEF	324 - 57
GT6155	♦THEF	324 - 58
GT6155A	♦THEF	324 - 59
GT6156	♦THEF	324 - 60
GT6156A	♦THEF	324 - 61
GT6157	♦THEF	324 - 62
GT6157A	♦THEF	324 - 63
GT6158	♦THEF	324 - 64
GT6158A	♦THEF	324 - 65
GT6159	♦THEF	324 - 66
GT6159A	♦THEF	324 - 67
GT6160	♦THEF	324 - 68
GT6160A	♦THEF	324 - 69
GT6161	♦THEF	324 - 70
GT6161A	♦THEF	324 - 71
GT6162	♦THEF	324 - 72
GT6162A	♦THEF	324 - 73
GT6163	♦THEF	324 - 74
GT6163A	♦THEF	324 - 75
GT6164	♦THEF	324 - 76
GT6164A	♦THEF	324 - 77
GT6165	♦THEF	324 - 78
GT6165A	♦THEF	324 - 79
GT6166	♦THEF	324 - 80
GT6166A	♦THEF	324 - 81
GT6167	♦THEF	324 - 82
GT6167A	♦THEF	324 - 83
GT6168	♦THEF	324 - 84
GT6168A	♦THEF	324 - 85
GT6169	♦THEF	324 - 86
GT6169A	♦THEF	324 - 87
GT6170	♦THEF	324 - 88
GT6170A	♦THEF	324 - 89
GT6171	♦THEF	324 - 90
GT6171A	♦THEF	324 - 91
GT6172	♦THEF	324 - 92
GT6172A	♦THEF	324 - 93
GT6173	♦THEF	324 - 94
GT6173A	♦THEF	324 - 95
GU1A100	♦GPD	305 -187
GU1A100SB	GPD	305 -182
GU-1	SAKJ	279 - 96
GU-1A	SAKJ	279 -108
GU-1B	SAKJ	279 -121
GU-1E	SAKJ	408 -175
GU-1F	SAKJ	411 - 30
GU-1Z	SAKJ	279 - 80
GU-3	SAKJ	281 - 61
GU-3A	SAKJ	281 -177
GU-3B	SAKJ	282 - 47

TYPE No.	MFRS	Pg&Line
GU-3SY	SAKJ	288 - 3
GU-3SZ	SAKJ	288 - 75
GU-3Z	SAKJ	280 -155
GZA2.0	TSAJ	163 -133
GZA2.2	TSAJ	163 -179
GZA2.4	TSAJ	164 - 40
GZA2.7	TSAJ	164 -159
GZA3.0	TSAJ	165 - 90
GZA3.3	TSAJ	166 - 27
GZA3.6	TSAJ	166 -202
GZA3.9	TSAJ	167 -167
GZA4.3	TSAJ	168 -187
GZA4.7	TSAJ	170 - 26
GZA5.1	♦TSAJ	171 -107
GZA5.6	♦TSAJ	172 -196
GZA6.2	♦TSAJ	175 - 48
GZA6.8	♦TSAJ	178 - 17
GZA7.5	♦TSAJ	180 - 15
GZA8.2	♦TSAJ	181 -199
GZA9.1	♦TSAJ	185 - 29
GZA10	♦TSAJ	187 - 74
GZA11	♦TSAJ	189 - 15
GZA12	♦TSAJ	190 -185
GZA13	♦TSAJ	192 -150
GZA15	♦TSAJ	194 -173
GZA16	♦TSAJ	196 - 78
GZA18	♦TSAJ	198 - 85
GZA20	♦TSAJ	200 - 80
GZA22	♦TSAJ	201 -188
GZA24	♦TSAJ	203 - 87
GZA27	♦TSAJ	205 - 20
GZA30	♦TSAJ	206 -157
GZA33	♦TSAJ	208 - 44
GZA36	♦TSAJ	209 -122
GZA39	♦TSAJ	210 -159
GZA43	♦TSAJ	211 -177
GZA47	♦TSAJ	212 -189
GZA51	♦TSAJ	213 -199
GZB6.2	TSAJ	175 -108
GZB6.8	TSAJ	178 - 85
GZB6.8C	TSAJ	178 - 86
GZB7.5	TSAJ	180 - 79
GZB7.5C	TSAJ	180 - 80
GZB8.2	TSAJ	182 - 63
GZB9.1	TSAJ	185 - 96
GZB9.1C	TSAJ	185 - 97
GZB10	TSAJ	187 -149
GZB10C	TSAJ	187 -150
GZB11	TSAJ	189 - 70
GZB11C	TSAJ	189 - 71
GZB12	TSAJ	191 - 33
GZB12C	TSAJ	191 - 34
GZB13	TSAJ	192 -203
GZB13C	TSAJ	192 -204
GZB15	TSAJ	195 - 34
GZB15C	TSAJ	195 - 35
GZB16	TSAJ	196 -132
GZB16C	TSAJ	196 -133
GZB18	TSAJ	198 -144
GZB18C	TSAJ	198 -145
GZB20	TSAJ	200 -138
GZB20C	TSAJ	200 -139
GZB22	TSAJ	202 - 37
GZB22C	TSAJ	202 - 38
GZB24	TSAJ	203 -139
GZB24C	TSAJ	203 -140
GZB27	TSAJ	205 - 74
GZB27C	TSAJ	205 - 75
GZB30	TSAJ	207 - 3
GZB30C	TSAJ	207 - 4
H01G	♦HITJ	310 - 89
H01J	♦HITJ	310 -104
H01L	♦HITJ	404 -158
H01M	♦HITJ	409 - 17
H03CF	♦HITJ	417 -206
H03DA	♦HITJ	419 -193
H03EA	♦HITJ	422 - 58
H6A3	♦EDL	308 - 63
H6B3	♦EDL	308 - 70
H6C3	♦EDL	308 - 79
H6D3	♦EDL	308 - 81
H6E3	♦EDL	308 - 87
H6F3	♦EDL	308 - 89
H6G3	♦EDL	308 - 96
H6H3	♦EDL	308 -104
H6K3	♦EDL	308 -108
H6M3	♦EDL	308 -110
H6N3	♦EDL	308 -115
H6P3	♦EDL	404 -115
H6R3	♦EDL	407 -208
H6S3	♦EDL	411 -170
H15B	♦HITJ	288 -117
H15D	♦HITJ	288 -215
H15M	♦HITJ	289 - 77
H15N	♦HITJ	289 -145
H114B	♦HITJ	280 -188
H114D	♦HITJ	281 - 92
H114M	♦HITJ	281 -206
H115B	♦HITJ	288 -111
H115C	♦HITJ	288 -158
H115D	♦HITJ	288 -209
H439	♦VARO	362 -126
H440	♦VARO	360 - 46
H441	♦VARO	360 - 47
H442	♦VARO	360 - 40
H443	♦VARO	360 - 41
H463	VARO	426 - 34
H466	♦VARO	309 - 21
H467	♦VARO	309 - 24
H468	♦VARO	309 - 26
H485-62	♦VARO	232 - 90
H500	♦VARO	278 -184
H521	♦VARO	232 - 98
H540	♦VARO	309 - 22

TYPE No.	MFRS	Pg&Line
H541	♦VARO	309 - 25
H542	♦VARO	309 - 27
H701	♦VARO	309 - 20
H702	♦VARO	309 - 23
H703	♦VARO	309 - 28
H704	♦VARO	309 - 29
H768-0	♦SOD	373 - 1
H768-1	♦SOD	373 - 3
H768-2	♦SOD	373 - 8
H768-3	♦SOD	373 - 14
H768-4	♦SOD	373 - 16
H768-6	♦SOD	373 - 22
H768-8	♦SOD	373 - 27
H800	MAL	279 - 46
H850	VARO	238 - 27
H1152	♦VARO	232 - 88
H1153	♦VARO	232 - 91
H1701-9	♦VARO	232 - 93
H1701-10	♦VARO	232 - 94
H1701-11	♦VARO	232 - 95
H1701-12	♦VARO	232 - 96
H1701-15	♦VARO	232 - 97
H1802	♦VARO	232 - 87
HA10	♦UNI	249 -155
HA15	♦UNI	249 -165
HA20	♦UNI	249 -179
HA25	♦UNI	249 -192
HA30	♦UNI	249 -205
HA40	♦UNI	249 -215
HA50#B	♦UNI	250 - 5
HA60E	ETPC	424 -149
HA60K	ETPC	424 -150
HA60P	ETPC	424 -151
HA75	♦UNI	250 - 21
HA100#B	♦UNI	250 - 34
HA120EL	ETPC	428 - 50
HA120KL	ETPC	428 - 51
HA120TL	ETPC	428 - 52
HA180EN	ETPC	430 - 41
HA180KN	ETPC	430 - 42
HA180LN	ETPC	430 - 43
HA180LO	ETPC	430 - 39
HA180TN	ETPC	430 - 44
HA240EO	ETPC	431 - 48
HA240LO	ETPC	431 - 49
HA240TO	ETPC	431 - 50
HA300EP	ETPC	432 - 24
HA300LP	ETPC	432 - 25
HA300TP	ETPC	432 - 26
HAB005	EDI	287 -183
HAB010	EDI	288 - 21
HAB020	EDI	288 -100
HAB040	EDI	288 -199
HAB060	EDI	289 - 66
HAB080	EDI	289 -136
HAB100	EDI	402 -171
HC5	DII	423 -188
HC8	DII	426 - 79
HC10	DII	427 -134
HC12	DII	428 -119
HC15	DII	429 - 86
HC30	♦SOD	282 -107
HC67	♦SOD	282 -109
HC67F	♦SOD	282 -110
HC68	♦SOD	282 -112
HC68F	♦SOD	282 -113
HC69	♦SOD	282 -118
HC69F	♦SOD	282 -119
HC70	♦SOD	282 -124
HC70F	♦SOD	282 -125
HC71	♦SOD	282 -134
HC71F	♦SOD	282 -137
HC72	♦SOD	282 -141
HC72F	♦SOD	282 -143
HC73	♦SOD	402 - 10
HC73F	♦SOD	402 - 13
HC500	♦SOD	282 -130
HC500F	♦SOD	282 -131
HC700	♦SOD	282 -129
HC1200	♦SOD	406 - 61
HC1200F	♦SOD	406 - 62
HC2500C	♦VMI	417 -180
HC2500F	♦VMI	417 -175
HC5000F	♦VMI	423 -209
HC5000S	♦VMI	423 -220
HC7500F	♦VMI	425 -179
HC7500S	♦VMI	425 -192
HC10000F	♦VMI	427 -106
HC10000S	♦VMI	427 -126
HC15000F	♦VMI	429 - 72
HC15000S	♦VMI	429 - 74
HC-2	SAKJ	241 -158
HC-5	♦RECT	423 -153
HC-8	♦RECT	426 - 72
HC-10	♦RECT	427 -112
HC-12	♦RECT	428 -106
HC-15	♦RECT	429 - 83
HCR1020	♦LTE	301 - 77
HCR1025	♦LTE	301 - 80
HCR1030	♦LTE	301 - 81
HCR1040	♦LTE	301 - 86
HCR1050	♦LTE	301 - 91
HCR1070	♦LTE	301 -102
HCR1100	♦LTE	301 -105
HCV	♦SOD	282 -105
HD2A	FERB	271 -109
HD3A	FERB	246 -143
HD4A	FERB	271 -110
HD1062	♦STI	246 -203
HD1310	♦STI	247 -142
HD1310A	♦STI	247 -143
HD1320	♦STI	247 -116
HD1320A	♦STI	247 -117
HD1330	♦STI	247 -104

Δ-Registered with JEDEC by this manufacturer

♦-Mfr's data sheet available in microfilm service

1. TYPE No. CROSS INDEX

IN TYPE NUMBER SEQUENCE

TYPE No.	MFRS	Pg&Line
HD1330A	♦STI	247 -105
HD1500-1	POS	312 -153
HD1500-2	POS	312 -159
HD1500-3	POS	312 -164
HD1500-4	POS	312 -169
HD1500-5	POS	312 -174
HD1500-6	POS	312 -180
HD1500-7	POS	312 -184
HD1500-8	POS	312 -189
HD1500-9	POS	312 -193
HD1500-10	POS	405 - 30
HD1500-12	POS	408 -144
HD1500-14	POS	410 -173
HD1500-16	POS	413 -114
HD1500-18	POS	414 -110
HD1500-20	POS	415 -211
HD1500-22	POS	416 -132
HD1500-24	POS	417 - 70
HD1500-26	POS	418 -101
HD1500-28	POS	418 -209
HD1500-30	POS	420 - 10
HD1705	♦STI	247 - 68
HD1705A	♦STI	247 - 93
HD1706	♦STI	246 -189
HD1707	♦STI	246 - 2
HD1810	♦STI	246 - 9
HD1811	STI	238 - 55
HD1812	STI	238 - 26
HD1840	♦STI	245 - 13
HD1841	♦STI	244 -163
HD1842	STI	238 - 22
HD1870	♦STI	244 -112
HD1871	♦STI	244 - 67
HD1872	STI	238 - 21
HD2100-1	POS	313 - 5
HD2100-2	POS	313 - 7
HD2100-3	POS	313 - 9
HD2100-4	POS	313 - 10
HD2100-5	POS	313 - 12
HD2100-6	POS	313 - 13
HD2100-7	POS	313 - 15
HD2100-8	POS	313 - 16
HD2100-9	POS	313 - 18
HD2100-10	POS	405 - 37
HD2100-12	POS	408 -152
HD2100-14	POS	410 -184
HD2100-16	POS	413 -123
HD2100-18	POS	414 -118
HD2100-20	POS	416 - 3
HD2135A	STI	248 -107
HD2500-1	POS	313 - 52
HD2500-2	POS	313 - 53
HD2500-3	POS	313 - 54
HD2500-4	POS	313 - 55
HD2500-5	POS	313 - 56
HD2500-6	POS	313 - 57
HD2500-7	POS	313 - 58
HD2500-8	POS	313 - 59
HD2500-9	POS	313 - 60
HD2500-10	POS	405 - 46
HD2500-12	POS	408 -161
HD2500-16	POS	413 -122
HD2500-20	POS	416 - 2
HD2500F	♦VMI	417 -184
HD2500S	♦VMI	417 -188
HD3000-1	POS	313 - 79
HD3000-2	POS	313 - 81
HD3000-3	POS	313 - 82
HD3000-4	POS	313 - 84
HD3000-5	POS	313 - 85
HD3000-6	POS	313 - 87
HD4101	STI	245 - 17
HD4102	STI	247 - 61
HD5000	STI	244 - 35
HD5000F	♦VMI	424 - 20
HD5000S	♦VMI	424 - 28
HD5001	STI	244 - 36
HD5002	STI	244 - 37
HD5003	STI	244 - 38
HD5004	STI	244 - 39
HD7500F	♦VMI	425 -184
HD7500S	♦VMI	425 -194
HD10000F	♦VMI	427 -138
HD10000S	♦VMI	427 -154
HD15000F	♦VMI	429 - 97
HD15000S	♦VMI	429 -104
HER101	♦DII	280 - 2
	♦RECT	
HER102	♦DII	280 - 73
	♦RECT	
HER103	♦DII	280 -165
	♦RECT	
HER104	♦DII	281 - 17
	♦RECT	
HER105	♦DII	281 - 72
	♦RECT	
HER151	♦DII	283 - 90
	♦RECT	
HER152	♦DII	283 -141
	♦RECT	
HER153	♦DII	283 -206
	♦RECT	
HER154	♦DII	284 - 45
	♦RECT	
HER155	♦DII	284 - 93
	♦RECT	
HER301	♦DII	287 -184
	♦RECT	
HER302	♦DII	288 - 22
	♦RECT	
HER303	♦DII	288 -101
	♦RECT	
HER304	♦DII	288 -154
	♦RECT	

TYPE No.	MFRS	Pg&Line
HER305	♦DII	288 -200
	♦RECT	
HER601	♦DII	291 -108
	♦RECT	
HER602	♦DII	291 -151
	♦RECT	
HER603	♦DII	291 -202
	♦RECT	
HER604	♦DII	292 - 19
	♦RECT	
HER605	♦DII	292 - 50
	♦RECT	
HER801	♦DII	293 - 68
	♦RECT	
HER802	♦DII	293 - 75
	♦RECT	
HER803	♦DII	293 - 89
	♦RECT	
HER804	♦DII	293 - 98
	♦RECT	
HER805	♦DII	293 -108
	♦RECT	
HF-1	♦SAKJ	241 - 91
HF-1A	♦SAKJ	241 -100
HF-1B	♦SAKJ	241 -109
HF-1C	♦SAKJ	241 -126
HF-1Z	♦SAKJ	241 - 83
HG1001	STI	247 - 62
HG1002	STI	247 - 63
HG1003	STI	247 - 64
HG1004	STI	247 - 65
HG1005	STI	247 - 66
HG1006	STI	247 - 67
HG1007	STI	246 -156
HG1008	STI	246 -157
HG1009	STI	246 -158
HG1010	STI	246 -159
HG1011	STI	246 -160
HG1012	STI	246 -161
HG1090	STI	231 -100
HG5002	STI	234 - 49
HG5003	STI	234 - 50
HG5004	STI	234 - 51
HG5005	STI	234 - 52
HG5006	STI	234 - 53
HG5007	STI	234 - 54
HG5008	STI	234 - 55
HG5009	STI	234 - 56
HG5078	STI	233 -196
HG5079	STI	233 -143
HG5085	STI	231 -218
HG5808	STI	231 -219
HM0104-2	♦HAS	315 - 46
HM0104-5	♦HAS	315 - 47
HM0104-8	♦HAS	315 - 48
HM0168-2	♦HAS	315 - 49
HM0168-5	♦HAS	315 - 50
HM0168-8	♦HAS	315 - 51
HM0186-2	♦HAS	315 - 52
HM0186-5	♦HAS	315 - 53
HM0186-8	♦HAS	315 - 54
HM0198-2	♦HAS	315 - 55
HM0198-5	♦HAS	315 - 56
HM0198-8	♦HAS	315 - 57
HM0410-2	♦HAS	315 - 58
HM0410-5	♦HAS	315 - 59
HM0410-8	♦HAS	315 - 60
HMG251	SCA	242 -176
HMG252	SCA	242 -168
HMG625	SCA	249 - 13
HMG625A	SCA	249 - 11
HMG626	SCA	249 - 33
HMG626A	SCA	249 - 31
HMG627	SCA	249 - 76
HMG659	SCA	249 - 36
HMG662	SCA	243 - 35
HMG662A	SCA	243 - 36
HMG663	SCA	243 - 37
HMG663A	SCA	243 - 27
HMG789	SCA	242 -187
HMG790	SCA	242 -179
HMG791	SCA	242 -188
HMG792	SCA	242 -189
HMG793	SCA	243 - 6
HMG794	SCA	242 -215
HMG795	SCA	243 - 7
HMG796	SCA	243 - 8
HMG811	SCA	242 -170
HMG812	SCA	242 -180
HMG813	SCA	242 -164
HMG814	SCA	242 -199
HMG818	SCA	248 -109
HMG837A	SCA	249 - 67
HMG840	SCA	249 - 26
HMG844	SCA	249 - 72
HMG891	SCA	243 - 1
HMG897	SCA	242 -208
HMG898	SCA	242 -205
HMG899	SCA	243 - 28
HMG900	SCA	243 - 29
HMG901	SCA	243 - 30
HMG903	SCA	245 - 85
HMG903A	SCA	245 - 86
HMG904	SCA	244 -218
HMG904A	SCA	244 -219
HMG905	SCA	244 -153
HMG905A	SCA	244 -154
HMG906	SCA	244 -155
HMG906A	SCA	244 -156
HMG907	SCA	244 -220
HMG907A	SCA	245 - 1
HMG908	SCA	245 - 87
HMG914	SCA	247 - 27
HMG914A	SCA	247 - 28

TYPE No.	MFRS	Pg&Line
HMG914B	SCA	247 - 29
HMG915	SCA	246 - 45
HMG916	SCA	247 - 30
HMG916A	SCA	247 - 31
HMG916B	SCA	247 - 32
HMG917	SCA	245 - 69
HMG925	SCA	242 -194
HMG926	SCA	242 -195
HMG927	SCA	243 - 12
HMG929	SCA	238 - 41
HMG930	SCA	238 -133
HMG948	SCA	248 -104
HMG993	SCA	244 -115
HMG3062	SCA	246 - 67
HMG3063	SCA	246 - 68
HMG3064	SCA	246 -126
HMG3065	SCA	246 - 69
HMG3066	SCA	246 - 70
HMG3067	SCA	244 -205
HMG3068	SCA	249 - 10
HMG3069	SCA	249 - 44
HMG3123	SCA	245 - 88
HMG3124	SCA	245 - 89
HMG3206	SCA	247 - 33
HMG3207	SCA	246 - 37
HMG3257	SCA	247 - 10
HMG3258	SCA	247 - 34
HMG3567	SCA	246 - 71
HMG3593	SCA	245 -104
HMG3594	SCA	246 - 38
HMG3596	SCA	245 - 2
HMG3598	SCA	246 -127
HMG3600	SCA	251 - 95
HMG3601	SCA	247 - 50
HMG3602	SCA	246 -140
HMG3603	SCA	245 -190
HMG3604	SCA	246 - 72
HMG3605	SCA	245 - 64
HMG3606	SCA	246 - 73
HMG3607	SCA	246 - 74
HMG3608	SCA	245 - 65
HMG3609	SCA	246 - 75
HMG3669	SCA	251 -131
HMG3722	SCA	245 -218
HMG3731	SCA	247 - 11
HMG3872	SCA	251 -111
HMG3873	SCA	245 -179
HMG3954	SCA	251 - 96
HMG3956	SCA	245 - 66
HMG4009	SCA	245 - 27
HMG4043	SCA	245 - 28
HMG4086	SCA	251 -132
HMG4092	SCA	238 - 76
HMG4147	SCA	245 - 18
HMG4148	SCA	247 - 35
HMG4149	SCA	247 - 36
HMG4150	SCA	251 - 97
HMG4151	SCA	246 - 76
HMG4152	SCA	245 - 67
HMG4153	SCA	246 - 77
HMG4154	SCA	245 - 29
HMG4305	SCA	246 - 78
HMG4308	SCA	246 -217
HMG4313	SCA	247 - 37
HMG4314	SCA	246 -218
HMG4317	SCA	246 -219
HMG4319	SCA	246 -128
HMG4322	SCA	251 - 98
HMG4373	SCA	247 - 38
HMG4375	SCA	246 - 39
HMG9001	SCA	246 -220
HMG9002	SCA	247 - 1
HMG9003	SCA	246 - 79
HMG9004	SCA	246 - 80
HMG9005	SCA	246 - 81
HMG9006	SCA	245 -140
HMG9007	SCA	245 -141
HMG9008	SCA	245 -142
HMG9009	SCA	245 -143
HMG9010	SCA	244 -206
HP6	CODI	424 -164
HP8	CODI	426 - 33
HP10	♦CODI	427 - 64
HP5082-0009	HPA	438 - 88
HP5082-0013	HPA	438 - 89
HP5082-0024	HPA	438 - 90
HP5082-0029	HPA	438 - 91
HP5082-0031	HPA	438 - 92
HP5082-0057	HPA	438 - 93
HP5082-0058	HPA	438 - 94
HP5082-0087	HPA	438 - 95
HP5082-0094	HPA	438 - 96
HP5082-0097	HPA	438 - 97
HP5082-0243	HPA	238 - 70
HP5082-1001	HPA	245 - 23
HP5082-1002	HPA	245 - 30
HP5082-1006	HPA	245 -133
HP5082-2080	HPA	439 - 54
HP5082-2263	HPA	438 - 98
HP5082-2301	HPA	248 - 96
HP5082-2302	HPA	248 - 97
HP5082-2303	HPA	248 - 91
HP5082-2305	HPA	248 - 98
HP5082-2306	HPA	439 - 55
HP5082-2308	HPA	439 - 56
HP5082-2351	HPA	439 - 57
HP5082-2356	HPA	439 - 58
HP5082-2370	HPA	439 - 59
HP5082-2396	HPA	439 - 60
HP5082-2521	HPA	439 - 61
HP5082-2566	HPA	439 - 62
HP5082-2706	HPA	439 - 63
HP5082-2712	HPA	439 - 64
HP5082-2714	HPA	439 - 65

TYPE No.	MFRS	Pg&Line
HP5082-2724	HPA	439 - 66
HP5082-2804	HPA	439 - 67
HP5082-2805	HPA	439 - 68
HP5082-2810	HPA	438 - 99
HP5082-2811	HPA	438 -100
HP5082-2813	HPA	439 - 69
HP5082-2814	HPA	439 - 70
HP5082-2815	HPA	439 - 71
HP5082-2818	HPA	439 - 72
HP5082-2826	HPA	439 - 73
HP5082-2835	♦HPA	248 - 90
HP5082-2836	HPA	439 - 74
HP5082-2837	♦HPA	438 -101
HP5082-2900	♦HPA	238 - 25
HP5082-2912	♦HPA	439 - 75
HP5082-2970	♦HPA	439 - 76
HP5082-3001	HPA	231 -220
HP5082-3080	HPA	232 - 1
HP5082-9394	HPA	435 - 88
HP5082-9395	HPA	439 - 77
HP5082-9396	HPA	439 - 78
HP5082-9397	HPA	439 - 79
HP5082-9398	HPA	439 - 80
HP5082-9399	HPA	439 - 81
HP5082-9696	HPA	439 - 82
HP5082-9697	HPA	439 - 83
HPA100	♦CODI	433 -133
HPA125	♦CODI	433 -187
HPA150	♦CODI	433 -195
HPA200	♦CODI	433 -204
HPA250	♦CODI	433 -207
HR100	CODI	288 - 46
HR200	CODI	288 -127
HR400	CODI	289 - 5
HR600	CODI	289 - 87
HR800	CODI	289 -156
HR1000	CODI	402 -188
HRP22	♦HITJ	279 -215
HRSCAJ4F	♦SET	367 - 96
HRSCAJ6	♦SET	369 - 64
HRSCBA4F	♦SET	372 - 5
HRSCBA6	♦SET	372 - 39
HRSCBH4F	♦SET	371 -186
HRSCBH6	♦SET	371 -195
HRSCDA4F	♦SET	303 -142
HRSCDA6	♦SET	303 -178
HRSCF7500	♦SET	425 -204
HRSCF10000	♦SET	427 -194
HRSCFS2000	♦SET	415 -119
HRSCFS4000	♦SET	422 - 42
HRSCFS6000	♦SET	425 - 24
HRSCFS8000	♦SET	425 - 25
HRSCFS10000	♦SET	427 -212
HRSCFS12000	♦SET	428 -148
HRSCH5000	♦SET	424 - 31
HRSCH7500	♦SET	425 -205
HRSCH10000	♦SET	427 -197
HRSCH12500	♦SET	291 - 83
HRSCH15000	♦SET	429 -154
HRSCH20000	♦SET	430 -206
HRSCH25000	♦SET	431 -171
HRSCHM5K	♦SET	423 -208
HRSCHS2500	♦SET	417 -194
HRSCHS5000	♦SET	424 - 52
HRSCHS7500	♦SET	425 -209
HRSCHS10000	♦SET	427 -213
HRSCHS12500	♦SET	298 - 10
HRSCHS15000	♦SET	429 -168
HRSCNA4F	♦SET	303 -143
HRSCNA6	♦SET	303 -179
HRSCPA4F	♦SET	303 -144
HRSCPA6	♦SET	303 -180
HS3#B	♦AEGG	421 -127
HS6	♦AEGG	425 -216
HS8	♦AEGG	427 - 18
HS10	♦UNI	401 - 6
HS10#B	♦AEGG	428 -159
HS13#B	♦AEGG	430 - 11
HS15	♦UNI	411 - 20
HS20	♦UNI	415 - 4
HS25	♦UNI	417 -125
HS30#B	♦UNI	419 - 94
HS40	♦UNI	421 -161
HS50	♦UNI	424 -165
HS60	♦UNI	250 - 18
HS75	♦UNI	425 -138
HS100	♦UNI	427 - 60
HS125EO	ETPC	242 - 67
HS125FO	ETPC	242 - 68
HS125LO	ETPC	242 - 69
HS125TO	ETPC	242 - 70
HS150EO	ETPC	242 - 89
HS150FO	ETPC	242 - 90
HS150LO	ETPC	242 - 91
HS150TO	ETPC	242 - 92
HS300W	ETPC	242 -137
HS350W	ETPC	242 -141
HS400W	ETPC	242 -146
HS450W	ETPC	242 -150
HSC11	♦HITJ	374 - 17
HSCH0813	♦HPA	438 -102
HSCH0814	♦HPA	438 -103
HSCH0815	♦HPA	438 -104
HSCH0816	♦HPA	438 -105
HSCH1111	♦HPA	445 - 51
HSCH3171	HPA	438 - 51
HSCH3206	HPA	438 - 52
HSCH3207	HPA	438 - 53
HSCH3486	HPA	438 - 54
HSCH5018	HPA	438 - 55
HSCH5019	HPA	438 - 56
HSCH-1001	♦HPA	231 -134
HSE7000-RT	HSE	292 -199
HSE7001-RT	HSE	292 -200

TYPE No.	MFRS	Pg&Line
HSE7002-RT	HSE	292 -201
HSE7003-RT	HSE	292 -202
HSE7004-RT	HSE	292 -203
HSE7005-RT	HSE	292 -204
HSE7006-RT	HSE	292 -205
HSE7007-RT	HSE	292 -206
HSE7008-RT	HSE	292 -207
HSE7010-RT	HSE	293 - 41
HSE7011-RT	HSE	293 - 43
HSE7012-RT	HSE	293 - 45
HSE7013-RT	HSE	293 - 47
HSE7014-RT	HSE	293 - 48
HSE7015-RT	HSE	293 - 50
HSE7016-RT	HSE	293 - 51
HSE7017-RT	HSE	293 - 53
HSE7018-RT	HSE	293 - 54
HSE7019-RT	HSE	293 - 55
HSE7020-RT	HSE	403 - 34
HSE7021-RT	HSE	263 - 11
HSE7022-RT	HSE	263 - 14
HSE7023-RT	HSE	263 - 17
HSE7024-RT	HSE	263 - 18
HSE7025-RT	HSE	263 - 19
HSE7026-RT	HSE	263 - 20
HSE7027-RT	HSE	263 - 21
HSE7030-RT	HSE	263 - 66
HSE7031-RT	HSE	263 - 69
HSE7032-RT	HSE	263 - 72
HSE7033-RT	HSE	263 - 73
HSE7034-RT	HSE	263 - 74
HSE7035-RT	HSE	263 - 75
HSE7036-RT	HSE	263 - 76
HSE8030-RT	HSE	263 -124
HSE8031-RT	HSE	263 -125
HSE8032-RT	HSE	263 -126
HSE8033-RT	HSE	263 -127
HSE8034-RT	HSE	263 -128
HSE8035-RT	HSE	263 -129
HSE8036-RT	HSE	263 -130
HSE8040-RT	HSE	263 -164
HSE8041-RT	HSE	263 -169
HSE8042-RT	HSE	263 -176
HSE8043-RT	HSE	263 -178
HSE8044-RT	HSE	263 -184
HSE8045-RT	HSE	263 -188
HSE8046-RT	HSE	263 -197
HSE8050-RT	HSE	293 -174
HSE8051-RT	HSE	293 -175
HSE8052-RT	HSE	293 -177
HSE8053-RT	HSE	293 -180
HSE8054-RT	HSE	293 -181
HSE8055-RT	HSE	293 -184
HSE8056-RT	HSE	293 -185
HSE8057-RT	HSE	298 - 52
HSE8058-RT	HSE	298 - 55
HSE8059-RT	HSE	298 - 60
HSE8060-RT	HSE	298 - 11
HSE8061-RT	HSE	298 - 16
HSE8062-RT	HSE	298 - 25
HSE8063-RT	HSE	298 - 33
HSE8064-RT	HSE	298 - 38
HSE8065-RT	HSE	298 - 45
HSE8066-RT	HSE	298 - 47
HSE8067-RT	HSE	298 - 53
HSE8068-RT	HSE	298 - 56
HSE8069-RT	HSE	298 - 61
HSE8070-RT	HSE	403 -121
HSK23	♦HITJ	238 - 18
HSK110	♦HITJ	238 - 69
HSK120	♦HITJ	246 - 51
HSKE2500/1100-.3		424 -197
	♦SEKG	
HSKE3500/1550-1.2		
	♦SEKG	426 - 92
HSKE3500/1550-2		426 -107
	♦SEKG	
HSKE3500/1550-.3		426 - 64
	♦SEKG	
HSKE3500/1550-.5		426 - 78
	♦SEKG	
HSKE5000/2200-1.2		
	♦SEKG	428 -139
HSKE5000/2200-.25		
	♦SEKG	428 - 97
HSKE5000/2200-.5		428 -116
	♦SEKG	
HSKE7500/3300-1.2		
	♦SEKG	429 -216
HSKE7500/3300-.4		429 -211
	♦SEKG	
HSKE10000/4500-1.2		
	♦SEKG	431 - 67
HSKE10000/4500-.4		
	♦SEKG	431 - 63
HSKE14000/6300-.4		
	♦SEKG	432 -108
HSKE17000/7600-.3		
	♦SEKG	432 -183
HSM88S	♦HITJ	375 -131
HSM88SR	♦HITJ	375 -132
HSM276S	♦HITJ	375 -133
HSM2836	♦HITJ	246 - 3
HSM2838	♦HITJ	245 -152
HTV125S	♦ETPC	428 - 26
HTV150S	♦ETPC	429 - 5
HV2PA	♦ETPC	276 - 43
HV2.5-10	♦SCN	427 - 13
HV2.5-10F	♦SCN	427 - 4
HV2.5-12	♦SCN	428 - 35
HV2.5-12F	♦SCN	428 - 27
HV2.5-15	♦SCN	429 - 13
HV2.5-15F	♦SCN	429 - 6
HV2.5-18	♦SCN	430 - 38
HV2.5-18F	♦SCN	430 - 34

Δ-Registered with JEDEC by this manufacturer

♦-Mfr's data sheet available in microfilm service

1. TYPE No. CROSS INDEX

IN TYPE NUMBER SEQUENCE

TYPE No.	MFRS	Pg&Line
HV4PA	♦ETPC	276 - 44
HV05	SAKJ	248 - 11
HV5	♦DII	360 - 18
HV5-5	♦SCN	423 - 61
HV5-5F	♦SCN	423 - 62
HV5-7	♦SCN	425 - 54
HV5-7F	♦SCN	425 - 55
HV5-10	♦SCN	427 - 6
HV5-10F	♦SCN	427 - 7
HV5-12	♦SCN	428 - 29
HV5-12F	♦SCN	428 - 30
HV5-15	♦SCN	429 - 7
HV5-15F	♦SCN	429 - 8
HV5-20	♦SCN	430 - 98
HV5-20F	♦SCN	430 - 99
HV5-25	♦SCN	431 - 80
HV5-25F	♦SCN	431 - 81
HV5-30	♦SCN	432 - 18
HV5-30F	♦SCN	432 - 19
HV5-40	♦SCN	432 -154
HV5-40F	♦SCN	432 -155
HV6PA	♦ETPC	276 - 45
HV08	SAKJ	240 -203
HV8	♦DII	360 - 19
HV8PA	♦ETPC	276 - 46
HV10	♦DII	360 - 20
HV10-5	♦SCN	423 - 65
HV10-5F	♦SCN	423 - 66
HV10-7	♦SCN	425 - 57
HV10-7F	♦SCN	425 - 58
HV10-10	♦SCN	427 - 16
HV10-10F	♦SCN	427 - 17
HV10-12	♦SCN	428 - 36
HV10-12F	♦SCN	428 - 37
HV10-15	♦SCN	429 - 18
HV10-15F	♦SCN	429 - 19
HV10-20	♦SCN	430 -109
HV10-20F	♦SCN	430 -110
HV10-25	♦SCN	431 - 86
HV10-25F	♦SCN	431 - 87
HV10-30	♦SCN	432 - 29
HV10-30F	♦SCN	432 - 30
HV10-40	♦SCN	432 -159
HV10-40F	♦SCN	432 -160
HV10E	♦ETPC	401 - 19
HV10K	ETPC	401 - 20
HV10M	♦ETPC	401 - 21
HV10P	♦ETPC	401 - 22
HV10PA	♦ETPC	401 - 75
HV12	♦DII	360 - 21
HV12A	♦SOD	405 -191
HV12B	♦SOD	405 -206
HV12C	♦SOD	405 -219
HV14	♦DII	360 - 22
HV15	♦DII	411 - 44
	♦SCN	
HV15F	♦SCN	256 -111
HV15PD	♦ETPC	410 -212
HV16A	♦SOD	412 - 11
HV16B	♦SOD	412 - 15
HV16C	♦SOD	412 - 21
HV20	♦SCN	415 - 31
HV20A	♦SOD	414 -187
HV20B	♦SOD	415 - 5
HV20C	♦SOD	415 - 32
HV20E	♦ETPC	414 -191
HV20F	♦SCN	256 -136
HV20K	ETPC	414 -192
HV20M	♦ETPC	414 -193
HV20P	♦ETPC	414 -194
HV20PD	♦ETPC	414 -199
HV21	♦SCN	415 - 6
HV21F	♦SCN	251 -120
HV23G	♦HITJ	444 - 51
HV24A	♦SOD	416 -203
HV24B	♦SOD	416 -209
HV24C	♦SOD	416 -219
HV25-5	♦SCN	423 - 74
HV25-5F	♦SCN	423 - 75
HV25-7	♦SCN	425 - 63
HV25-7F	♦SCN	425 - 64
HV25-10	♦SCN	427 - 34
HV25-10F	♦SCN	427 - 35
HV25-12	♦SCN	428 - 54
HV25-12F	♦SCN	428 - 55
HV25-15	♦SCN	429 - 28
HV25-15F	♦SCN	429 - 29
HV25-20	♦SCN	430 -121
HV25-20F	♦SCN	430 -122
HV25-25	♦SCN	431 - 93
HV25-25F	♦SCN	431 - 94
HV25-30	♦SCN	432 - 36
HV25-30F	♦SCN	432 - 37
HV25-40	♦SCN	432 -164
HV25-40F	♦SCN	432 -165
HV25PD	♦ETPC	417 -110
HV28A	♦SOD	418 -149
HV28B	♦SOD	418 -152
HV28C	♦SOD	418 -159
HV30	♦SCN	419 - 95
HV30E	♦ETPC	419 - 68
HV30F	♦SCN	251 -121
HV30K	ETPC	419 - 69
HV30M	♦ETPC	419 - 70
HV30P	♦ETPC	419 - 71
HV30PD	♦ETPC	419 - 74
HV32A	♦SOD	420 - 49
HV32B	♦SOD	420 - 52
HV32C	♦SOD	420 - 54
HV36A	♦SOD	420 -219
HV36B	♦SOD	421 - 4
HV36C	♦SOD	421 - 8
HV40	SCN	421 -180
HV40A	♦SOD	421 -149

TYPE No.	MFRS	Pg&Line
HV40B	♦SOD	421 -167
HV40C	♦SOD	421 -181
HV40E	♦ETPC	421 -154
HV40F	♦SCN	251 -122
HV40K	ETPC	421 -155
HV40M	♦ETPC	421 -156
HV40P	♦ETPC	421 -157
HV50	♦SCN	423 -112
HV50E	♦ETPC	423 - 97
HV50F	♦SCN	251 - 41
HV50K	ETPC	423 - 98
HV50M	♦ETPC	423 - 99
HV50P	♦ETPC	423 -100
HV60	♦SCN	424 -162
HV60EL	♦ETPC	424 -131
HV60F	♦SCN	251 - 43
HV60KL	ETPC	424 -132
HV60ML	ETPC	424 -133
HV70	♦HITJ	444 - 52
HV70EL	♦ETPC	425 - 67
HV75	♦HITJ	238 - 17
HV80	♦HITJ	442 -106
HV80EL	♦ETPC	426 - 12
HV80EN	ETPC	426 - 1
HV80KL	ETPC	426 - 13
HV80ML	ETPC	426 - 14
HV80TN	♦ETPC	426 - 2
HV100EL	ETPC	427 - 42
HV100EN	ETPC	427 - 23
HV100EO	♦ETPC	427 - 10
HV100LO	ETPC	427 - 11
HV100TN	♦ETPC	427 - 24
HV106	♦SCN	424 -118
HV106F	♦SCN	248 -188
HV108	♦SCN	426 - 29
HV108F	♦SCN	248 -194
HV110	♦SCN	427 - 56
HV110F	♦SCN	248 -199
HV112	♦SCN	428 - 69
HV112F	♦SCN	248 -202
HV115	♦SCN	429 - 43
HV115F	♦SCN	248 -206
HV120EO	♦ETPC	428 - 33
HV120LO	ETPC	428 - 34
HV120TN	ETPC	428 - 42
HV140EO	♦ETPC	428 -182
HV140LO	ETPC	428 -183
HV160EP	♦ETPC	429 -173
HV160LP	ETPC	429 -174
HV180EP	♦ETPC	430 - 36
HV180LP	ETPC	430 - 37
HV200EP	♦ETPC	430 -103
HV200LP	ETPC	430 -104
HV206	♦SCN	424 -174
HV206F	♦SCN	251 -123
HV208	♦SCN	426 - 43
HV208F	♦SCN	251 -124
HV210	♦SCN	427 - 77
HV210F	♦SCN	251 -125
HV212	♦SCN	428 - 86
HV212F	♦SCN	251 -126
HV215	♦SCN	429 - 61
HV215F	♦SCN	251 -127
HV815	DII	411 - 60
HV820	DII	415 - 38
HV830	DII	419 -124
HV840	DII	421 -196
HV850	DII	423 -147
HV860	DII	424 -193
HV870	DII	425 - 86
HV880	DII	426 - 56
HV890	DII	426 -166
HV8100	DII	427 - 92
HV8150	DII	429 - 60
HV-03SS	SAKJ	419 - 41
HV-04-5	SAKJ	421 -123
HV-5	♦RECT	423 -142
HV-06SS	SAKJ	424 -119
HV-08SS	SAKJ	425 -212
HV-8	♦RECT	426 - 57
HV-10	♦RECT	427 - 94
HV-12	♦RECT	428 - 96
HV-14	♦RECT	428 -210
HV-15	♦RECT	429 - 75
HVC15	♦SCN	411 - 75
HVC15F	SCN	261 -169
HVC20	♦SCN	415 - 51
HVC20F	SCN	261 -173
HVC25	♦SCN	417 -155
HVC25F	SCN	261 -178
HVC30	♦SCN	419 -119
HVC30F	SCN	256 -176
HVC40	♦SCN	421 -203
HVC40F	SCN	256 -197
HVC50	♦SCN	423 -155
HVC50F	SCN	256 -215
HVC60	♦SCN	424 -202
HVC60F	SCN	257 - 12
HVC180	♦SAR	413 -197
HVC240	♦SAR	416 -214
HVC300	♦SAR	419 - 85
HVC400	♦SAR	421 -172
HVC500	♦SAR	423 -120
HVC600	♦SAR	424 -163
HVC650	♦SAR	425 - 40
HVC750	♦SAR	425 -141
HVC840	♦SAR	426 -136
HVC960	♦SAR	426 -212
HVC1000	♦SAR	427 - 63
HVC1200	♦SAR	428 - 68
HVC1500	♦SAR	429 - 42
HVC1800	♦SAR	430 - 50
HVC2100	♦SAR	431 - 4
HVC2500	♦SAR	431 - 99

TYPE No.	MFRS	Pg&Line
HVC3000	♦SAR	432 - 41
HVE10	♦UNI	401 - 63
HVE15	♦UNI	411 - 21
HVE20	♦UNI	415 - 7
HVE25	♦UNI	417 -126
HVE30	♦UNI	419 - 96
HVE40	♦UNI	422 - 54
HVE50	♦UNI	424 - 56
HVE75	♦UNI	425 -210
HVE100	♦UNI	427 -217
HVF2500	♦UNI	251 - 37
HVF5000	♦UNI	251 - 40
HVF7500	♦UNI	251 - 45
HVF10000	♦UNI	251 - 50
HVF12500	♦UNI	251 - 59
HVF15000	♦UNI	251 - 62
HVF20000	♦UNI	251 - 69
HVF25000	♦UNI	251 - 74
HVFS2500	♦UNI	251 -148
HVFS5000	♦UNI	251 -149
HVFS7500	♦UNI	251 -150
HVFS10000	♦UNI	251 -151
HVFS12500	♦UNI	251 -152
HVFS15000	♦UNI	251 -153
HVFS17500	♦UNI	251 -154
HVFS20000	♦UNI	251 -155
HVG-1	GIC	401 - 74
HVG-2	♦GIC	415 - 14
HVG-3	♦GIC	419 - 99
HVG-4	♦GIC	421 -173
HVG-5	♦GIC	423 -113
HVH5000	♦UNI	423 - 95
HVH10000	♦UNI	427 - 51
HVH12500	♦UNI	428 - 66
HVH15000	♦UNI	429 - 36
HVH20000	♦UNI	251 - 72
HVH25000	♦UNI	431 -100
HVHF5000	♦UNI	423 - 96
HVHF7500	♦UNI	425 -134
HVHF10000	♦UNI	251 - 53
HVHF12500	♦UNI	428 - 67
HVHF15000	♦UNI	429 - 37
HVHF20000	♦UNI	430 -129
HVHF25000	♦UNI	431 -101
HVHJ15K	♦UNI	429 - 38
HVHJ20K	♦UNI	430 -130
HVHJ22.5K	♦UNI	431 - 18
HVHJ25K	♦UNI	431 -102
HVHJ30K	♦UNI	432 - 42
HVHJ35K	♦UNI	432 -120
HVHJ37.5K	♦UNI	432 -152
HVHJ40K	♦UNI	432 -168
HVHJ45K	♦UNI	432 -218
HVHS2500	♦UNI	417 -174
HVHS5000	♦UNI	424 - 6
HVHS7500	♦UNI	425 -197
HVHS10000	♦UNI	427 -182
HVHS12500	♦UNI	428 -144
HVHS15000	♦UNI	429 -143
HVHS17500	♦UNI	430 - 32
HVHS20000	♦UNI	430 -197
HVJX15K	♦UNI	250 - 43
HVJX20K	♦UNI	250 - 47
HVJX22.5K	♦UNI	250 - 48
HVJX25K	♦UNI	250 - 49
HVJX30K	♦UNI	250 - 50
HVJX35K	♦UNI	250 - 51
HVJX37.5K	♦UNI	250 - 52
HVJX40K	♦UNI	250 - 53
HVJX45K	♦UNI	250 - 54
HVK89	♦HITJ	231 - 13
HVP5	♦DII	360 - 52
HVP8	♦DII	360 - 53
HVP10	♦DII	360 - 54
HVP12	♦DII	360 - 55
HVP14	♦DII	360 - 56
HVP15	♦DII	360 - 57
HVP16	♦DII	360 - 58
HVPR10-06	♦GIC	424 -208
HVPR10-08	♦GIC	426 - 80
HVPR10-10	♦GIC	427 -136
HVPR10-12	♦GIC	428 -120
HVPR10-14	♦GIC	429 - 1
HVPR10-16	♦GIC	429 -213
HVPR12-08	♦GIC	426 - 59
HVPR12-10	♦GIC	427 - 98
HVPR12-12	♦GIC	428 - 99
HVPR12-14	♦GIC	428 -211
HVPR12-16	♦GIC	429 -207
HVPR15-08	♦GIC	426 - 60
HVPR15-10	♦GIC	427 - 99
HVPR15-12	♦GIC	428 -100
HVPR15-14	♦GIC	428 -212
HVPR15-16	♦GIC	429 -208
HVR1	SOD	445 - 52
HVR2	SOD	445 - 53
HVR3	SOD	445 - 54
HVR3B	SAKJ	236 - 82
HVR3H	SAKJ	236 - 83
HVR4	SOD	445 - 55
HVR5	SOD	426 - 58
HVR6	SOD	445 - 56
HVR-3B	SAKJ	426 - 61
HVRG80	♦CODI	425 -215
HVRG100	♦CODI	427 - 14
HVRG150	♦CODI	429 - 15
HVRG200	♦CODI	430 -107
HVRG300	♦CODI	432 - 28
HVRG400	♦CODI	432 -158
HVRS80	♦CODI	248 - 17
HVRS100	♦CODI	248 - 20
HVRS150	CODI	248 - 25
HVRS200	♦CODI	248 - 29
HVRS300	♦CODI	248 - 30

TYPE No.	MFRS	Pg&Line
HVRS400	♦CODI	248 - 31
HVS-17	SAKJ	428 - 79
HVT-15SS	♦SAKJ	427 -218
HVT-20SS	♦SAKJ	428 -179
HVT-22	SAKJ	428 - 47
HVT-25SS	SAKJ	430 - 10
HVT-30S	♦SAKJ	430 - 45
HVT-30SS	♦SAKJ	430 - 94
HVX10	♦UNI	249 -156
HVX15	♦UNI	249 -166
HVX20	♦UNI	249 -180
HVX25	♦UNI	249 -193
HVX30(M)	♦UNI	249 -206
HVX40	♦UNI	249 -216
HVX50	♦UNI	250 - 6
HVX75	♦UNI	250 - 22
HVX100	♦UNI	250 - 35
HX2PA	♦ETPC	241 - 76
HX4PA	♦ETPC	241 - 86
HX6PA	♦ETPC	241 - 94
HX8PA	♦ETPC	241 -101
HX10E	♦ETPC	241 -112
HX10K	ETPC	241 -113
HX10M	♦ETPC	241 -114
HX10P	♦ETPC	241 -115
HX10PA	♦ETPC	241 -116
HX15PD	♦ETPC	241 -134
HX20E	♦ETPC	241 -149
HX20K	ETPC	241 -150
HX20M	♦ETPC	241 -151
HX20P	♦ETPC	241 -152
HX20PD	♦ETPC	241 -153
HX25PD	♦ETPC	241 -161
HX30E	♦ETPC	241 -170
HX30K	ETPC	241 -171
HX30M	♦ETPC	241 -172
HX30P	♦ETPC	241 -173
HX30PD	♦ETPC	241 -174
HX40E	♦ETPC	241 -187
HX40K	ETPC	241 -188
HX40M	♦ETPC	241 -189
HX40P	♦ETPC	241 -190
HX50E	♦ETPC	241 -205
HX50K	ETPC	241 -206
HX50M	♦ETPC	241 -207
HX50P	♦ETPC	241 -208
HX60EL	♦ETPC	242 - 1
HX60KL	ETPC	242 - 2
HX60ML	ETPC	242 - 3
HX70EL	♦ETPC	242 - 14
HX80EL	♦ETPC	242 - 21
HX80EN	ETPC	242 - 22
HX80KL	ETPC	242 - 23
HX80ML	ETPC	242 - 24
HX80TN	♦ETPC	242 - 25
HX100EL	ETPC	242 - 44
HX100EN	ETPC	242 - 45
HX100EO	♦ETPC	242 - 46
HX100LO	ETPC	242 - 47
HX100TN	♦ETPC	242 - 48
HX120EO	♦ETPC	242 - 71
HX120LO	ETPC	242 - 72
HX120TN	ETPC	242 - 73
HX140EO	♦ETPC	242 - 81
HX140LO	ETPC	242 - 82
HX160EP	♦ETPC	242 -102
HX160LP	ETPC	242 -103
HX180EP	♦ETPC	242 -107
HX180LP	ETPC	242 -108
HX200EP	♦ETPC	242 -116
HX200LP	ETPC	242 -117
HZ2B1	♦HITJ	163 -136
HZ2B2	♦HITJ	163 -162
HZ2B3	♦HITJ	163 -182
HZ2C1	♦HITJ	164 - 8
HZ2C2	♦HITJ	164 - 45
HZ2C3	♦HITJ	164 - 96
HZ2HB1	♦HITJ	163 -137
HZ2HB2	♦HITJ	163 -163
HZ2HB3	♦HITJ	163 -183
HZ2HC1	♦HITJ	164 - 9
HZ2HC2	♦HITJ	164 - 46
HZ2HC3	♦HITJ	164 - 97
HZ2LLA	HITJ	163 - 99
HZ2LLB	HITJ	163 -155
HZ2LLC	HITJ	164 - 18
HZ2.0PB	HITJ	163 -143
HZ2.0PC	HITJ	163 -164
HZ2.2PB	HITJ	163 -190
HZ2.2PC	HITJ	164 - 10
HZ2.4PB	HITJ	164 - 69
HZ2.4PC	HITJ	164 -105
HZ2.7EB1	♦HITJ	164 -124
HZ2.7EB2	♦HITJ	165 - 38
HZ2.7PB	HITJ	164 -191
HZ2.7PC	HITJ	165 - 45
HZ3A1	♦HITJ	164 -116
HZ3A2	♦HITJ	164 -142
HZ3A3	♦HITJ	165 - 13
HZ3B1	♦HITJ	165 - 42
HZ3B2	♦HITJ	165 - 68
HZ3B3	♦HITJ	165 -150
HZ3C1	♦HITJ	165 -167
HZ3C2	♦HITJ	165 -202
HZ3C3	♦HITJ	166 -118
HZ3HA1	♦HITJ	164 -117
HZ3HA2	♦HITJ	164 -163
HZ3HA3	♦HITJ	165 - 20
HZ3HB1	♦HITJ	165 - 43
HZ3HB2	♦HITJ	165 - 96
HZ3HB3	♦HITJ	165 -151
HZ3HC1	♦HITJ	165 -168
HZ3HC2	♦HITJ	166 - 31
HZ3HC3	♦HITJ	166 -119

TYPE No.	MFRS	Pg&Line
HZ3LLA	HITJ	164 -132
HZ3LLB	HITJ	165 - 57
HZ3LLC	HITJ	165 -187
HZ3.0EB1	♦HITJ	165 - 50
HZ3.0EB2	♦HITJ	165 -164
HZ3.0PB	HITJ	165 -130
HZ3.0PC	HITJ	165 -170
HZ3.3EB1	♦HITJ	165 -176
HZ3.3EB2	♦HITJ	166 -123
HZ3.6EB1	♦HITJ	166 -148
HZ3.6EB2	♦HITJ	167 - 95
HZ3.6PB	HITJ	167 - 30
HZ3.6PC	HITJ	167 -100
HZ3.9EB1	♦HITJ	167 -106
HZ3.9EB2	♦HITJ	168 - 92
HZ3.9PB	HITJ	168 - 9
HZ3.9PC	HITJ	168 -105
HZ4A1	♦HITJ	166 -131
HZ4A2	♦HITJ	166 -173
HZ4A3	♦HITJ	167 - 89
HZ4B1	♦HITJ	167 - 97
HZ4B2	♦HITJ	167 -139
HZ4B3	♦HITJ	168 - 85
HZ4C1	♦HITJ	168 -102
HZ4C2	♦HITJ	168 -114
HZ4C3	♦HITJ	168 -151
HZ4HA1	♦HITJ	166 -132
HZ4HA2	♦HITJ	166 -206
HZ4HA3	♦HITJ	167 - 90
HZ4HB1	♦HITJ	167 - 98
HZ4HB2	♦HITJ	167 -171
HZ4HB3	♦HITJ	167 -172
HZ4HC1	♦HITJ	168 -104
HZ4HC2	♦HITJ	168 -115
HZ4HC3	♦HITJ	168 -196
HZ4LLA	HITJ	166 -159
HZ4LLB	HITJ	167 -124
HZ4LLC	HITJ	168 -113
HZ4.3EB1	♦HITJ	168 -112
HZ4.3EB2	♦HITJ	168 -197
HZ4.3EB3	♦HITJ	169 -100
HZ4.3PB	HITJ	168 -116
HZ4.3PC	HITJ	169 -114
HZ4.7EB1	♦HITJ	169 -123
HZ4.7EB2	♦HITJ	169 -139
HZ4.7EB3	♦HITJ	170 -175
HZ4.7PB	HITJ	170 - 81
HZ4.7PC	HITJ	170 -190
HZ5A1	♦HITJ	169 - 98
HZ5A2	♦HITJ	169 -110
HZ5A3	♦HITJ	169 -128
HZ5B1	♦HITJ	169 -189
HZ5B2	♦HITJ	170 -165
HZ5B3	♦HITJ	170 -187
HZ5C1	♦HITJ	170 -202
HZ5C2	♦HITJ	171 - 65
HZ5C3	♦HITJ	172 - 28
HZ5HA1	♦HITJ	169 - 99
HZ5HA2	♦HITJ	169 -111
HZ5HA3	♦HITJ	169 -129
HZ5HB1	♦HITJ	170 - 30
HZ5HB2	♦HITJ	170 -169
HZ5HB3	♦HITJ	170 -188
HZ5HC1	♦HITJ	171 - 6
HZ5HC2	♦HITJ	171 -111
HZ5HC3	♦HITJ	172 - 29
HZ5LLA	HITJ	169 -107
HZ5LLB	HITJ	170 -160
HZ5LLC	HITJ	170 -184
HZ5.1EB1	♦HITJ	170 -196
HZ5.1EB2	♦HITJ	171 - 19
HZ5.1EB3	♦HITJ	172 - 34
HZ5.1PB	HITJ	171 -160
HZ5.1PC	HITJ	172 - 61
HZ5.6EB1	♦HITJ	172 - 69
HZ5.6EB2	♦HITJ	172 - 88
HZ5.6EB3	♦HITJ	173 -146
HZ5.6PB	HITJ	173 - 43
HZ5.6PC	HITJ	173 -184
HZ6A1	♦HITJ	172 - 55
HZ6A1L	♦HITJ	172 - 56
HZ6A2	♦HITJ	172 - 73
HZ6A2L	♦HITJ	172 - 74
HZ6A3	♦HITJ	172 - 83
HZ6A3L	♦HITJ	172 - 84
HZ6B1	♦HITJ	173 -131
HZ6B1L	♦HITJ	173 -132
HZ6B2	♦HITJ	173 -140
HZ6B2L	♦HITJ	173 -141
HZ6B3	♦HITJ	173 -166
HZ6B3L	♦HITJ	173 -167
HZ6C1	♦HITJ	173 -189
HZ6C1L	♦HITJ	173 -190
HZ6C2	♦HITJ	174 - 37
HZ6C2L	♦HITJ	174 - 38
HZ6C3	♦HITJ	175 -192
HZ6C3L	♦HITJ	175 -193
HZ6HA1	♦HITJ	172 - 57
HZ6HA2	♦HITJ	172 - 75
HZ6HA3	♦HITJ	172 - 85
HZ6HB1	♦HITJ	173 -135
HZ6HB2	♦HITJ	173 -142
HZ6HB3	♦HITJ	173 -168
HZ6HC1	♦HITJ	173 -191
HZ6HC2	♦HITJ	174 - 39
HZ6HC3	♦HITJ	175 -194
HZ6.2EB1	♦HITJ	173 -188
HZ6.2EB2	♦HITJ	174 - 35
HZ6.2EB3	♦HITJ	176 - 17
HZ6.2PB	HITJ	175 -105
HZ6.2PC	HITJ	177 - 97
HZ6.8EB1	♦HITJ	176 -198
HZ6.8EB2	♦HITJ	177 -106
HZ6.8EB3	♦HITJ	178 -208

Δ-Registered with JEDEC by this manufacturer

♦-Mfr's data sheet available in microfilm service

1. TYPE No. CROSS INDEX

IN TYPE NUMBER SEQUENCE

TYPE No.	MFRS	Pg&Line
HZ6.8PB	HITJ	178 - 82
HZ6.8PC	HITJ	179 - 83
HZ7A1	♦HITJ	176 -192
HZ7A1L	♦HITJ	176 -193
HZ7A2	♦HITJ	177 - 80
HZ7A2L	♦HITJ	177 - 81
HZ7A3	♦HITJ	177 -119
HZ7A3L	♦HITJ	177 -120
HZ7B1	♦HITJ	179 - 2
HZ7B1L	♦HITJ	179 - 3
HZ7B2	♦HITJ	179 - 33
HZ7B2L	♦HITJ	179 - 34
HZ7B3	♦HITJ	179 - 77
HZ7B3L	♦HITJ	179 - 78
HZ7C1	♦HITJ	179 -103
HZ7C1L	♦HITJ	179 -104
HZ7C2	♦HITJ	179 -178
HZ7C2L	♦HITJ	179 -179
HZ7C3	♦HITJ	181 - 17
HZ7C3L	♦HITJ	181 - 18
HZ7HA1	♦HITJ	176 -194
HZ7HA2	♦HITJ	177 - 83
HZ7HA3	♦HITJ	177 -121
HZ7HB1	♦HITJ	179 - 6
HZ7HB2	♦HITJ	179 - 35
HZ7HB3	♦HITJ	179 - 79
HZ7HC1	♦HITJ	179 -112
HZ7HC2	♦HITJ	180 - 19
HZ7HC3	♦HITJ	181 - 26
HZ7.5EB1	♦HITJ	179 - 32
HZ7.5EB2	♦HITJ	179 - 92
HZ7.5EB3	♦HITJ	179 -121
HZ7.5PB	HITJ	180 - 76
HZ7.5PC	HITJ	181 - 51
HZ8.2EB1	♦HITJ	181 - 41
HZ8.2EB2	♦HITJ	181 - 61
HZ8.2EB3	♦HITJ	182 -192
HZ8.2PB	HITJ	182 - 60
HZ8.2PC	HITJ	183 -184
HZ9A1	♦HITJ	181 - 47
HZ9A1L	♦HITJ	181 - 48
HZ9A2	♦HITJ	181 - 89
HZ9A2L	♦HITJ	181 - 90
HZ9A3	♦HITJ	182 -197
HZ9A3L	♦HITJ	182 -198
HZ9B1	♦HITJ	183 - 96
HZ9B1L	♦HITJ	183 - 97
HZ9B2	♦HITJ	183 -152
HZ9B2L	♦HITJ	183 -153
HZ9B3	♦HITJ	183 -217
HZ9B3L	♦HITJ	183 -218
HZ9C1	♦HITJ	184 -204
HZ9C1L	♦HITJ	184 -205
HZ9C2	♦HITJ	186 - 39
HZ9C2L	♦HITJ	186 - 40
HZ9C3	HITJ	186 -100
HZ9C3L	♦HITJ	186 -101
HZ9HA1	♦HITJ	181 - 49
HZ9HA2	♦HITJ	181 - 92
HZ9HA3	♦HITJ	183 - 2
HZ9HB1	♦HITJ	183 - 99
HZ9HB2	♦HITJ	183 -170
HZ9HB3	♦HITJ	184 - 8
HZ9HC1	♦HITJ	185 - 33
HZ9HC2	♦HITJ	186 - 45
HZ9HC3	♦HITJ	186 -109
HZ9.1EB1	♦HITJ	183 -110
HZ9.1EB2	♦HITJ	183 -203
HZ9.1EB3	♦HITJ	184 -105
HZ9.1PB	HITJ	185 - 94
HZ9.1PC	HITJ	186 -117
HZ10EB1	♦HITJ	186 - 66
HZ10EB2	♦HITJ	186 -125
HZ10EB3	♦HITJ	186 -165
HZ10EC	♦HITJ	188 -100
HZ10PB	HITJ	187 -145
HZ10PC	HITJ	187 -146
HZ11A1	♦HITJ	186 -128
HZ11A1L	♦HITJ	186 -129
HZ11A2	♦HITJ	186 -157
HZ11A2L	♦HITJ	186 -158
HZ11A3	♦HITJ	188 - 94
HZ11A3L	♦HITJ	188 - 95
HZ11B1	♦HITJ	188 -104
HZ11B1L	♦HITJ	188 -105
HZ11B2	♦HITJ	188 -123
HZ11B2L	♦HITJ	188 -124
HZ11B3	♦HITJ	188 -141
HZ11B3L	♦HITJ	188 -142
HZ11C1	♦HITJ	190 - 1
HZ11C1L	♦HITJ	190 - 2
HZ11C2	♦HITJ	190 - 21
HZ11C2L	♦HITJ	190 - 16
HZ11C3	♦HITJ	190 - 39
HZ11C3L	♦HITJ	190 - 30
HZ11EB1	♦HITJ	188 -110
HZ11EB2	♦HITJ	188 -138
HZ11EB3	♦HITJ	190 - 7
HZ11HA1	♦HITJ	186 -132
HZ11HA2	♦HITJ	186 -160
HZ11HA3	♦HITJ	188 - 97
HZ11HB1	♦HITJ	188 -109
HZ11HB2	♦HITJ	188 -126
HZ11HB3	♦HITJ	188 -146
HZ11HC1	♦HITJ	190 - 6
HZ11HC2	♦HITJ	190 - 25
HZ11HC3	♦HITJ	190 - 46
HZ11LHB3	♦HITJ	188 -143
HZ11PB	HITJ	189 - 67
HZ11PC	HITJ	190 - 36
HZ12A1	♦HITJ	190 - 80
HZ12A1L	♦HITJ	190 - 81
HZ12A2	♦HITJ	191 -181
HZ12A2L	♦HITJ	191 -182
HZ12A3	♦HITJ	191 -194
HZ12A3L	♦HITJ	191 -195
HZ12B1	♦HITJ	192 - 9
HZ12B1L	♦HITJ	192 - 10
HZ12B2	♦HITJ	192 - 31
HZ12B2L	♦HITJ	192 - 32
HZ12B3	♦HITJ	193 -120
HZ12B3L	♦HITJ	193 -121
HZ12C1	♦HITJ	193 -134
HZ12C1L	♦HITJ	193 -135
HZ12C2	♦HITJ	193 -148
HZ12C2L	♦HITJ	193 -149
HZ12C3	♦HITJ	193 -173
HZ12C3L	♦HITJ	193 -174
HZ12EB1	♦HITJ	190 - 26
HZ12EB2	♦HITJ	190 - 47
HZ12EB3	♦HITJ	190 -189
HZ12HA1	♦HITJ	190 - 82
HZ12HA2	♦HITJ	191 -187
HZ12HA3	♦HITJ	191 -201
HZ12HB1	♦HITJ	192 - 11
HZ12HB2	♦HITJ	192 - 78
HZ12HB3	♦HITJ	193 -122
HZ12HC1	♦HITJ	193 -136
HZ12HC2	♦HITJ	193 -155
HZ12HC3	♦HITJ	193 -184
HZ12LHA2	♦HITJ	191 -183
HZ12PB	HITJ	191 - 30
HZ12PC	HITJ	192 - 23
HZ13EB1	♦HITJ	192 - 1
HZ13EB2	♦HITJ	192 - 79
HZ13EB3	♦HITJ	193 -133
HZ13PB	HITJ	192 -200
HZ13PC	HITJ	194 - 58
HZ15-1	♦HITJ	194 - 69
HZ15-1L	♦HITJ	194 - 70
HZ15-2	♦HITJ	194 - 93
HZ15-2L	♦HITJ	194 - 94
HZ15-3	♦HITJ	195 -180
HZ15-3L	♦HITJ	195 -181
HZ15EB1	♦HITJ	193 -156
HZ15EB2	♦HITJ	194 - 68
HZ15EB3	♦HITJ	194 - 91
HZ15H1	♦HITJ	194 - 72
HZ15H2	♦HITJ	194 - 95
HZ15H3	♦HITJ	195 -184
HZ15PB	HITJ	195 - 32
HZ15PC	HITJ	195 -199
HZ16-1	♦HITJ	195 -190
HZ16-1L	♦HITJ	195 -191
HZ16-2	♦HITJ	197 - 52
HZ16-2L	♦HITJ	197 - 51
HZ16-3	♦HITJ	197 - 76
HZ16-3L	♦HITJ	197 - 77
HZ16EB1	♦HITJ	195 -185
HZ16EB2	♦HITJ	195 -198
HZ16EB3	♦HITJ	197 - 56
HZ16H1	♦HITJ	195 -197
HZ16H2	♦HITJ	197 - 57
HZ16H3	♦HITJ	197 - 80
HZ16PB	HITJ	196 -130
HZ16PC	HITJ	197 -175
HZ18-1	♦HITJ	197 -178
HZ18-1L	♦HITJ	197 -166
HZ18-2	♦HITJ	197 -186
HZ18-2L	♦HITJ	197 -187
HZ18-3	♦HITJ	199 - 87
HZ18-3L	♦HITJ	199 - 88
HZ18EB1	♦HITJ	197 - 75
HZ18EB2	♦HITJ	197 -172
HZ18EB3	♦HITJ	198 - 1
HZ18H1	♦HITJ	197 -180
HZ18H2	♦HITJ	197 -190
HZ18H3	♦HITJ	199 - 93
HZ18LH1	♦HITJ	197 -167
HZ18LH2	♦HITJ	197 -188
HZ18LH3	♦HITJ	199 - 89
HZ18PB	HITJ	198 -142
HZ18PC	HITJ	199 -168
HZ20-1	♦HITJ	199 -170
HZ20-1L	♦HITJ	199 -171
HZ20-2	♦HITJ	200 - 17
HZ20-2L	♦HITJ	200 - 18
HZ20-3	♦HITJ	201 - 76
HZ20-3L	♦HITJ	201 - 77
HZ20EB1	♦HITJ	199 - 94
HZ20EB2	♦HITJ	199 -166
HZ20EB3	♦HITJ	200 - 11
HZ20EC	♦HITJ	201 - 71
HZ20H1	♦HITJ	199 -207
HZ20H2	♦HITJ	200 - 20
HZ20H3	♦HITJ	201 - 82
HZ20PB	HITJ	200 -136
HZ20PC	HITJ	201 - 93
HZ22-1	♦HITJ	201 -100
HZ22-1L	♦HITJ	201 -101
HZ22-2	♦HITJ	202 -174
HZ22-2L	♦HITJ	202 -175
HZ22-3	♦HITJ	202 -189
HZ22-3L	♦HITJ	202 -190
HZ22EB1	♦HITJ	201 - 83
HZ22EB2	♦HITJ	201 - 90
HZ22EB3	♦HITJ	201 -109
HZ22EB4	♦HITJ	202 -178
HZ22H1	♦HITJ	201 -102
HZ22H2	♦HITJ	202 -177
HZ22H3	♦HITJ	202 -191
HZ22PB	HITJ	202 - 35
HZ22PC	HITJ	203 - 2
HZ24-1	♦HITJ	203 - 5
HZ24-1L	♦HITJ	203 - 6
HZ24-2	♦HITJ	204 - 61
HZ24-2L	♦HITJ	204 - 62
HZ24-3	♦HITJ	204 - 84
HZ24-3L	♦HITJ	204 - 85
HZ24EB1	♦HITJ	202 -187
HZ24EB2	♦HITJ	202 -199
HZ24EB3	♦HITJ	203 - 27
HZ24EB4	♦HITJ	204 - 71
HZ24H1	♦HITJ	203 - 10
HZ24H2	♦HITJ	204 - 63
HZ24H3	♦HITJ	204 - 88
HZ24PB	HITJ	203 -137
HZ24PC	HITJ	204 -144
HZ27-1	♦HITJ	204 -141
HZ27-1L	♦HITJ	204 -146
HZ27-2	♦HITJ	204 -161
HZ27-2L	♦HITJ	204 -162
HZ27-3	♦HITJ	206 - 20
HZ27-3L	♦HITJ	206 - 21
HZ27EB1	♦HITJ	204 - 89
HZ27EB2	♦HITJ	204 -138
HZ27EB3	♦HITJ	204 -153
HZ27EB4	♦HITJ	205 - 24
HZ27H1	♦HITJ	204 -142
HZ27H2	♦HITJ	204 -165
HZ27H3	♦HITJ	206 - 22
HZ27PB	HITJ	205 - 72
HZ27PC	HITJ	206 - 83
HZ30-1	♦HITJ	206 - 79
HZ30-1L	♦HITJ	206 - 80
HZ30-2	♦HITJ	206 -100
HZ30-2L	♦HITJ	206 -101
HZ30-3	♦HITJ	207 -145
HZ30-3L	♦HITJ	207 -146
HZ30EB1	♦HITJ	206 - 17
HZ30EB2	♦HITJ	206 - 70
HZ30EB3	♦HITJ	206 - 90
HZ30EB4	♦HITJ	206 - 98
HZ30H1	♦HITJ	206 - 81
HZ30H2	♦HITJ	206 -103
HZ30H3	♦HITJ	207 -148
HZ30PB	HITJ	207 - 1
HZ30PC	HITJ	207 -170
HZ33-1	♦HITJ	207 -164
HZ33-1L	♦HITJ	207 -165
HZ33-2	♦HITJ	207 -182
HZ33-2L	♦HITJ	207 -183
HZ33-3	♦HITJ	209 - 36
HZ33-3L	♦HITJ	209 - 37
HZ33EB1	♦HITJ	207 -143
HZ33EB2	♦HITJ	207 -155
HZ33EB3	♦HITJ	207 -162
HZ33EB4	♦HITJ	207 -177
HZ33H1	♦HITJ	207 -167
HZ33H2	♦HITJ	207 -186
HZ33H3	♦HITJ	209 - 40
HZ33PB	HITJ	208 - 95
HZ33PC	HITJ	209 - 63
HZ36-1	♦HITJ	209 - 56
HZ36-1L	♦HITJ	209 - 57
HZ36-2	♦HITJ	209 -104
HZ36-2L	♦HITJ	209 -105
HZ36-3	♦HITJ	210 - 96
HZ36-3L	♦HITJ	210 - 97
HZ36EB1	♦HITJ	208 - 48
HZ36EB2	♦HITJ	209 - 35
HZ36EB3	♦HITJ	209 - 48
HZ36EB4	♦HITJ	209 - 60
HZ36H1	♦HITJ	209 - 59
HZ36H2	♦HITJ	209 -125
HZ36H3	♦HITJ	210 - 98
HZ36PB	HITJ	209 -163
HZ36PC	HITJ	210 -108
HZ39EB1	♦HITJ	209 - 76
HZ39EB2	♦HITJ	210 - 85
HZ39EB3	♦HITJ	210 - 86
HZ39EB4	♦HITJ	210 -104
HZS5.6JB1	HITJ	172 - 71
HZS5.6JB2	HITJ	173 -128
HZS5.6JB3	HITJ	173 -165
HZS6.2JB1	HITJ	173 -201
HZS6.2JB2	HITJ	174 - 41
HZS6.2JB3	HITJ	176 -109
HZS6.8JB1	HITJ	177 - 99
HZS6.8JB2	HITJ	177 -123
HZS6.8JB3	HITJ	179 - 28
HZS7.5JB1	HITJ	179 - 84
HZS7.5JB2	HITJ	179 -115
HZS7.5JB3	HITJ	181 - 8
HZS8.2JB1	HITJ	181 - 53
HZS8.2JB2	HITJ	181 - 95
HZS8.2JB3	HITJ	183 - 60
HZS9.1JB1	HITJ	183 -194
HZS9.1JB2	HITJ	184 - 99
HZS9.1JB3	HITJ	186 - 61
HZS10JB1	HITJ	186 -123
HZS10JB2	HITJ	186 -166
HZS10JB3	HITJ	188 -102
HZS11JB1	HITJ	188 -132
HZS11JB2	HITJ	188 -189
HZS11JB3	HITJ	190 - 17
HZS12JB1	HITJ	190 - 40
HZS12JB2	HITJ	190 -148
HZS12JB3	HITJ	191 -191
HZS13JB1	HITJ	192 - 19
HZS13JB2	HITJ	193 -123
HZS13JB3	HITJ	193 -151
HZS15JB1	HITJ	194 - 61
HZS15JB2	HITJ	194 - 87
HZS15JB3	HITJ	195 -182
HZS16JB1	HITJ	196 - 4
HZS16JB2	HITJ	197 - 59
HZS16JB3	HITJ	197 - 79
HZS18JB1	HITJ	197 -179
HZS18JB2	HITJ	197 -189
HZS18JB3	HITJ	199 - 99
HZS20JB1	HITJ	200 - 1
HZS20JB2	HITJ	200 - 58
HZS20JB3	HITJ	201 - 79
HZS22JB1	HITJ	201 - 96
HZS22JB2	HITJ	201 -162
HZS22JB3	HITJ	202 -188
HZS24JB1	HITJ	203 - 7
HZS24JB2	HITJ	204 - 66
HZS24JB3	HITJ	204 - 87
HZT7A1	♦HITJ	177 -107
HZT7A2	♦HITJ	177 -108
HZT7A3	♦HITJ	177 -109
HZT7B1	♦HITJ	177 -110
HZT7B2	♦HITJ	177 -111
HZT7B3	♦HITJ	177 -112
HZT7C1	♦HITJ	177 -113
HZT7C2	♦HITJ	177 -114
HZT9	♦HITJ	186 - 92
HZT22	♦HITJ	201 -131
HZT33	♦HITJ	209 - 61
ICC6401	♦INC	291 -114
ICC6402	♦INC	291 -157
ICC6403	♦INC	291 -208
ICC6404	♦INC	292 - 55
ICC6405	♦INC	292 -113
ICC6406	♦INC	292 -164
ICC6407	♦INC	403 - 11
ICR1001	♦INC	238 - 97
ICR1002	♦INC	238 -166
ICR1003	♦INC	239 - 42
ICR1004	♦INC	239 -148
ICR1005	♦INC	240 - 8
ICR1006	♦INC	240 - 82
ICR1007	♦INC	240 -126
ICR1501	♦INC	238 - 98
ICR1502	♦INC	238 -167
ICR1503	♦INC	239 - 43
ICR1504	♦INC	239 -149
ICR1505	♦INC	240 - 9
ICR1506	♦INC	240 - 83
ICR1507	♦INC	240 -127
ICR3001	♦INC	238 - 99
ICR3002	♦INC	238 -168
ICR3003	♦INC	239 - 44
ICR3004	♦INC	239 -150
ICR3005	♦INC	240 - 10
ICR3006	♦INC	240 - 84
ICR3007	♦INC	240 -128
ICR6001	♦INC	238 -100
ICR6002	♦INC	238 -169
ICR6003	♦INC	239 - 45
ICR6004	♦INC	239 -151
ICR6005	♦INC	240 - 11
ICR6006	♦INC	240 - 85
ICR6007	♦INC	240 -129
ICT5	♦GSE	345 - 83
ICT8	♦GSE	345 - 84
ICT8C	♦GSE	345 - 85
ICT10	♦GSE	345 - 86
ICT10C	♦GSE	345 - 87
ICT12	♦GSE	345 - 88
ICT12C	♦GSE	345 - 89
ICT15	♦GSE	345 - 90
ICT15C	♦GSE	345 - 91
ICT18	♦GSE	345 - 92
ICT18C	♦GSE	345 - 93
ICT22	♦GSE	345 - 94
ICT22C	♦GSE	345 - 95
ICT36	♦GSE	345 - 96
ICT36C	♦GSE	345 - 97
ICT45	♦GSE	345 - 98
ICT45C	♦GSE	345 - 99
ICTE5	♦GSE	345 -100
	♦MOTA	♦THEF
ICTE5C	♦MOTA	345 -101
	♦THEF	
ICTE5S	♦THEF	324 - 96
ICTE5SC	♦THEF	324 - 97
ICTE8	♦GSE	345 -102
	♦MOTA	♦THEF
ICTE8C	♦GSE	345 -103
	♦MOTA	♦THEF
ICTE10	♦GSE	345 -104
	♦MOTA	♦THEF
ICTE10C	♦GSE	345 -105
	♦MOTA	♦THEF
ICTE12	♦GSE	345 -106
	♦MOTA	♦THEF
ICTE12C	♦GSE	345 -107
	♦MOTA	♦THEF
ICTE15	♦GSE	345 -108
	♦MOTA	♦THEF
ICTE15C	♦GSE	345 -109
	♦MOTA	♦THEF
ICTE18	♦GSE	345 -110
	♦MOTA	♦THEF
ICTE18C	♦GSE	346 - 1
	♦MOTA	♦THEF
ICTE22	♦GSE	346 - 2
	♦MOTA	♦THEF
ICTE22C	♦GSE	346 - 3
	♦MOTA	♦THEF
ICTE36	♦GSE	346 - 4
	♦MOTA	♦THEF
ICTE36C	♦GSE	346 - 5
	♦MOTA	♦THEF
ICTE45	♦GSE	346 - 6
	♦MOTA	♦THEF
ICTE45C	♦GSE	346 - 7
	♦MOTA	♦THEF
ID1-050	♦IDC	243 -112
ID1-050A	♦IDC	243 -113
ID1-050B	♦IDC	243 -114
ID1-050C	♦IDC	243 -115
ID1-050D	♦IDC	243 -116
ID1-050E	♦IDC	243 -117
ID1-050T	♦IDC	243 -118
ID2-050	♦IDC	243 -129
ID2-050A	♦IDC	243 -130
ID2-050B	♦IDC	243 -131
ID2-050C	♦IDC	243 -132
ID2-050D	♦IDC	243 -133
ID2-050E	♦IDC	243 -134
ID2-050T	♦IDC	243 -135
ID3-050	♦IDC	243 -146
ID3-050A	♦IDC	243 -147
ID3-050B	♦IDC	243 -148
ID3-050C	♦IDC	243 -149
ID3-050D	♦IDC	243 -150
ID3-050E	♦IDC	243 -151
ID3-050T	♦IDC	243 -152
ID5-050	♦IDC	243 -168
ID5-050A	♦IDC	243 -169
ID5-050B	♦IDC	243 -170
ID5-050C	♦IDC	243 -171
ID5-050D	♦IDC	243 -172
ID5-050E	♦IDC	243 -173
ID5-050T	♦IDC	243 -174
ID6-020	♦IDC	244 - 18
ID6-050	♦IDC	243 -192
ID6-050A	♦IDC	243 -193
ID6-050B	♦IDC	243 -194
ID6-050C	♦IDC	243 -195
ID6-050D	♦IDC	243 -196
ID6-050E	♦IDC	243 -197
ID6-050T	♦IDC	243 -198
ID8-050	♦IDC	244 - 19
ID8-050A	♦IDC	244 - 20
ID8-050B	♦IDC	244 - 21
ID8-050C	♦IDC	244 - 22
ID8-050D	♦IDC	244 - 23
ID8-050T	♦IDC	244 - 24
ID10-050	♦IDC	244 - 40
ID10-050A	♦IDC	244 - 41
ID10-050B	♦IDC	244 - 42
ID10-050C	♦IDC	244 - 43
ID10-050D	♦IDC	244 - 44
ID10-050T	♦IDC	244 - 45
ID12-050	♦IDC	244 - 71
ID12-050A	♦IDC	244 - 72
ID12-050B	♦IDC	244 - 73
ID12-050C	♦IDC	244 - 74
ID12-050D	♦IDC	244 - 75
ID12-050T	♦IDC	244 - 76
ID15-050	♦IDC	244 - 93
ID15-050A	♦IDC	244 - 94
ID15-050B	♦IDC	244 - 95
ID15-050C	♦IDC	244 - 96
ID15-050D	♦IDC	244 - 97
ID15-050T	♦IDC	244 - 98
ID18-050	♦IDC	244 -122
ID18-050A	♦IDC	244 -123
ID18-050B	♦IDC	244 -124
ID18-050C	♦IDC	244 -125
ID18-050D	♦IDC	244 -126
ID18-050T	♦IDC	244 -127
ID20-050	♦IDC	244 -143
ID20-050A	♦IDC	244 -144
ID20-050T	♦IDC	244 -145
ID100	♦INL	435 - 59
ID101	♦INL	435 - 60
ID2580	♦IDC	279 - 86
ID4080	♦IDC	279 - 93
ID6080	♦IDC	279 -106
ID8080	♦IDC	279 -119
ID10080	♦IDC	401 -130
ID12080	♦IDC	406 - 27
IDA1Z5,A,B,C	IDC	228 - 78
IDA1Z6.8,A,B,C		228 - 94
	IDC	
IDA1Z8.2,A,B,C		228 -108
	IDC	
IDA1Z9.5,A,B,C		228 -122
	IDC	
IDA1Z10,A,B,C	IDC	228 -124
IDA1Z14,A,B,C	IDC	228 -146
IDA1Z18,A,B,C	IDC	228 -159
IDA1Z22,A,B,C	IDC	228 -174
IDA1Z26,A,B,C	IDC	229 - 1
IDA1Z30,A,B,C	IDC	229 - 13
IDA1Z34,A,B,C	IDC	229 - 27
IDA1Z38,A,B,C	IDC	229 - 37
IDA1Z42,A,B,C	IDC	229 - 48
IDA1Z46,A,B,C	IDC	229 - 55
IDA1Z52,A,B,C	IDC	229 - 67
IDA1Z56,A,B,C	IDC	229 - 68
IDA1Z60,A,B,C	IDC	229 - 75
IDA1Z64,A,B,C	IDC	229 - 83
IDA1Z68,A,B,C	IDC	229 - 85
IDA1Z72,A,B,C	IDC	229 - 90
IDA1Z76,A,B,C	IDC	229 - 95
IDA1Z80,A,B,C	IDC	229 - 97
IDA1Z84,A,B,C	IDC	229 -102
IDA1Z88,A,B,C	IDC	229 -104
IDA1Z92,A,B,C	IDC	229 -109
IDA1Z96,A,B,C	IDC	229 -111
IDA1Z100,A,B,C		229 -114
	IDC	
IDA1Z104,A,B,C		229 -120
	IDC	
IDA1Z108,A,B,C		229 -122
	IDC	
IDA1Z112,A,B,C		229 -127
	IDC	
IDA1Z116,A,B,C		229 -129
	IDC	
IDA1Z120,A,B,C		229 -131
	IDC	

Δ-Registered with JEDEC by this manufacturer

♦-Mfr's data sheet available in microfilm service

1. TYPE No. CROSS INDEX

IN TYPE NUMBER SEQUENCE

TYPE No.	MFRS	Pg&Line
IDA1Z124,A,B,C		229 -136
	IDC	
IDA1Z128,A,B,C		229 -138
	IDC	
IDA1Z132,A,B,C		229 -143
	IDC	
IDA1Z136,A,B,C		229 -145
	IDC	
IDA1Z140,A,B,C		229 -147
	IDC	
IDA1Z144,A,B,C		229 -149
	IDC	
IDA1Z148,A,B,C		229 -151
	IDC	
IDA1Z150,A,B,C		229 -152
	IDC	
IDAZ62,A,B,C	IDC	229 - 79
IDAZ66,A,B,C	IDC	229 - 84
IDAZ70,A,B,C	IDC	229 - 89
IDAZ74,A,B,C	IDC	229 - 91
IDAZ78,A,B,C	IDC	229 - 96
IDAZ82,A,B,C	IDC	229 - 98
IDAZ86,A,B,C	IDC	229 -103
IDAZ90,A,B,C	IDC	229 -105
IDAZ94,A,B,C	IDC	229 -110
IDAZ98,A,B,C	IDC	229 -112
IDAZ100,A,B,C	IDC	229 -113
IDAZ104,A,B,C	IDC	229 -119
IDAZ108,A,B,C	IDC	229 -121
IDAZ112,A,B,C	IDC	229 -126
IDAZ116,A,B,C	IDC	229 -128
IDAZ120,A,B,C	IDC	229 -130
IDAZ124,A,B,C	IDC	229 -135
IDAZ128,A,B,C	IDC	229 -137
IDAZ132,A,B,C	IDC	229 -142
IDAZ136,A,B,C	IDC	229 -144
IDAZ140,A,B,C	IDC	229 -146
IDAZ144,A,B,C	IDC	229 -148
IDAZ148,A,B,C	IDC	229 -150
IDAZ225,A,B,C	IDC	228 -115
IDAZ226,A,B,C	IDC	228 -131
IDAZ227,A,B,C	IDC	228 -142
IDAZ228,A,B,C	IDC	228 -154
IDAZ229,A,B,C	IDC	228 -166
IDAZ230,A,B,C	IDC	228 -178
IDAZ231,A,B,C	IDC	229 - 10
IDAZ232,A,B,C	IDC	229 - 29
IDAZ233,A,B,C	IDC	229 - 46
IDAZ234,A,B,C	IDC	229 - 61
IDAZ235,A,B,C	IDC	229 - 73
IDAZ472,A,B,C	IDC	228 - 67
IDAZ473,A,B,C	IDC	228 - 75
IDAZ474,A,B,C	IDC	228 - 84
IDAZ475,A,B,C	IDC	228 - 98
IDAZ824,A,B,C	IDC	228 - 90
IDAZ3181,A,B,C		228 -105
	IDC	
IDAZ3397,A,B,C		228 - 63
	IDC	
IDAZ3398,A,B,C		228 - 71
	IDC	
IDAZ3399,A,B,C		228 - 77
	IDC	
IDAZ3400,A,B,C		228 - 93
	IDC	
IDAZ3401,A,B,C		228 -107
	IDC	
IDAZ3402,A,B,C		228 -123
	IDC	
IDAZ3403,A,B,C		228 -135
	IDC	
IDAZ3404,A,B,C		228 -147
	IDC	
IDAZ3405,A,B,C		228 -158
	IDC	
IDAZ3406,A,B,C		228 -173
	IDC	
IDAZ3407,A,B,C		229 - 2
	IDC	
IDAZ3408,A,B,C		229 - 20
	IDC	
IDAZ3409,A,B,C		229 - 38
	IDC	
IDAZ3410,A,B,C		229 - 56
	IDC	
IDBC12-47	SELI	440 - 6
IDCC12-68	SELI	440 - 7
IDDC12-68	SELI	440 - 8
IN6313	CDI	346 - 8
IN6321	CDI	346 - 9
IN6322	CDI	346 - 10
IRD3899	♦INR	257 -164
	INRJ	
IRD3900	♦INR	258 - 85
	INRJ	
IRD3901	♦INR	259 - 83
	INRJ	
IRD3902	♦INR	259 -193
	INRJ	
IRD3903	♦INR	260 - 50
	INRJ	
IRD3909	♦INR	257 -165
	INRJ	
IRD3910	♦INR	258 - 86
	INRJ	
IRD3911	♦INR	259 - 84
	INRJ	
IRD3912	♦INR	259 -194
	INRJ	
IRD3913	♦INR	260 - 51
	INRJ	
IRKD56-04	♦INR	303 - 45
IRKD56-06	♦INR	303 - 48
IRKD56-08	♦INR	303 - 52

TYPE No.	MFRS	Pg&Line
IRKD56-10	♦INR	403 -211
IRKD56-12	♦INR	407 - 61
IRKD71-04	♦INR	304 -106
IRKD71-06	♦INR	304 -144
IRKD71-08	♦INR	304 -178
IRKD71-10	♦INR	404 - 5
IRKD71-12	♦INR	407 - 83
IRKD91-04	♦INR	305 -139
IRKD91-06	♦INR	305 -145
IRKD91-08	♦INR	305 -151
IRKD91-10	♦INR	404 - 38
IRKD91-12	♦INR	407 -113
IRKD200-04	♦INR	308 -174
IRKD200-06	♦INR	308 -193
IRKD200-08	♦INR	308 -211
IRKD200-10	♦INR	404 -118
IRKD200-12	♦INR	407 -213
IRKD200-14	♦INR	410 - 43
IRKD200-16	♦INR	413 - 15
IRKD240-04	♦INR	308 -175
IRKD240-06	♦INR	308 -194
IRKD240-08	♦INR	308 -212
IRKD240-10	♦INR	404 -119
IRKD240-12	♦INR	407 -214
IRKD240-14	♦INR	410 - 44
IRKD240-16	♦INR	413 - 16
IRKE56-04	♦INR	303 - 46
IRKE56-06	♦INR	303 - 49
IRKE56-08	♦INR	303 - 53
IRKE56-10	♦INR	403 -212
IRKE56-12	♦INR	407 - 62
IRKE71-04	♦INR	304 -107
IRKE71-06	♦INR	304 -145
IRKE71-08	♦INR	304 -179
IRKE71-10	♦INR	404 - 6
IRKE71-12	♦INR	407 - 84
IRKE91-04	♦INR	305 -140
IRKE91-06	♦INR	305 -146
IRKE91-08	♦INR	305 -152
IRKE91-10	♦INR	404 - 39
IRKE91-12	♦INR	407 -114
IRKE200-04	♦INR	308 -176
IRKE200-06	♦INR	308 -195
IRKE200-08	♦INR	308 -213
IRKE200-10	♦INR	404 -120
IRKE200-12	♦INR	407 -215
IRKE200-14	♦INR	410 - 45
IRKE200-16	♦INR	413 - 17
IRKE240-04	♦INR	308 -177
IRKE240-06	♦INR	308 -196
IRKE240-08	♦INR	308 -214
IRKE240-10	♦INR	404 -121
IRKE240-12	♦INR	407 -216
IRKE240-14	♦INR	410 - 46
IRKE240-16	♦INR	413 - 18
IRWC470-1300	SELI	440 - 9
IS002	QTC	435 - 42
IS003	QTC	435 - 43
IS188AM	♦TSAJ	274 - 71
IS188FM	♦TSAJ	274 - 72
IS426	♦TSAJ	274 - 49
ISOPAC1203	♦SET	403 - 84
ISOPAC1204	♦SET	296 -124
ISOPAC1211	♦SET	296 - 63
ISOPACO103	♦SET	403 - 85
ISOPACO104	♦SET	296 -125
ISOPACO111	♦SET	296 - 64
ISOPACO203	♦SET	403 - 86
ISOPACO204	♦SET	296 -126
ISOPACO211	♦SET	296 - 65
ISOPACO403	♦SET	403 - 87
ISOPACO404	♦SET	296 -127
ISOPACO411	♦SET	296 - 66
ISOPACO603	♦SET	403 - 88
ISOPACO604	♦SET	296 -128
ISOPACO611	♦SET	296 - 67
ISS106	HITJ	238 - 24
ISS119	HITJ	244 -208
ISS120	HITJ	246 - 26
ISS122	HITJ	249 -137
ISV121	HITJ	234 - 86
ITT600	♦ITTG	245 - 43
ITT601	♦ITTG	245 -203
ITT2001	♦ITTG	249 - 61
ITT2002	♦ITTG	249 -109
ITT2003	♦ITTG	249 -130
ITT3001	♦ITTG	234 -123
ITT3002	♦ITTG	234 -179
ITT3003	♦ITTG	234 -124
ITT4000G	♦ITTG	279 -216
J01	MEHK	367 -133
J1	DII	283 -166
	♦RECT	
J1G	♦DII	283 -155
	♦RECT	
J02	MEHK	367 -169
J2	DII	284 - 14
	♦RECT	
J2G	♦DII	284 - 1
	♦RECT	
J04	MEHK	367 -211
J4	DII	284 -121
	♦RECT	
J4A3	EDL	304 - 26
J4B3	EDL	304 - 48
J4C3	EDL	304 - 83
J4D3	EDL	304 - 87
J4E3	EDL	304 - 97
J4F3	EDL	304 -102
J4G3	EDL	304 -128
J4G	♦DII	284 -108
	♦RECT	
J4H3	EDL	304 -140
J4K3	EDL	304 -167

TYPE No.	MFRS	Pg&Line
J4M3	EDL	304 -174
J4N3	EDL	304 -199
J005	MEHK	367 -103
J05	DII	283 -111
	♦RECT	
J05G	♦DII	283 -100
	♦RECT	
J5A3	♦EDL	309 - 89
J5B3	♦EDL	309 -102
J5C3	♦EDL	309 -122
J5D3	♦EDL	309 -130
J5E3	♦EDL	309 -142
J5F3	♦EDL	309 -148
J5G3	♦EDL	309 -162
J5H3	♦EDL	309 -180
J5K3	♦EDL	309 -195
J5M3	♦EDL	309 -204
J5N3	♦EDL	309 -220
J5P3	♦EDL	404 -147
J5R3	♦EDL	408 - 21
J5S3	♦EDL	411 -181
J06	MEHK	368 - 29
J6	DII	285 - 5
	♦RECT	
J6G	♦DII	284 -210
	♦RECT	
J8	DII	285 - 78
	♦RECT	
J8G	♦DII	285 - 68
	♦RECT	
J10	DII	402 - 80
	♦RECT	
J10G	♦DII	402 - 69
	♦RECT	
J11J	♦HITJ	404 -123
J11L	♦HITJ	409 - 10
J11X	♦HITJ	411 -175
J527-0A	♦SOD	298 -109
J527-0C	♦SOD	298 -110
J527-0D	♦SOD	298 -111
J527-1A	♦SOD	298 -138
J527-1C	♦SOD	298 -139
J527-1D	♦SOD	298 -140
J527-2A	♦SOD	298 -180
J527-2C	♦SOD	298 -181
J527-2D	♦SOD	298 -182
J527-3A	♦SOD	299 - 11
J527-3C	♦SOD	299 - 12
J527-3D	♦SOD	299 - 13
J527-4A	♦SOD	299 - 37
J527-4C	♦SOD	299 - 38
J527-4D	♦SOD	299 - 39
J527-5A	♦SOD	299 - 84
J527-5C	♦SOD	299 - 85
J527-5D	♦SOD	299 - 86
J527-6A	♦SOD	299 -102
J527-6C	♦SOD	299 -103
J527-6D	♦SOD	299 -104
J527-7A	♦SOD	299 -141
J527-7C	♦SOD	299 -142
J527-7D	♦SOD	299 -143
J527-8A	♦SOD	299 -152
J527-8C	♦SOD	299 -153
J527-8D	♦SOD	299 -154
J527-9A	♦SOD	299 -176
J527-9C	♦SOD	299 -177
J527-9D	♦SOD	299 -178
J527-10A	♦SOD	403 -130
J527-10C	♦SOD	403 -131
J527-10D	♦SOD	403 -132
J552	♦SIX	435 - 28
J553	♦SIX	435 - 29
J554	♦SIX	435 - 30
J555	♦SIX	435 - 31
J556	♦SIX	435 - 32
J557	♦SIX	435 - 33
J650-1	SOD	417 -191
J650-2	SOD	417 -189
J650-3	SOD	424 - 36
J650-4	SOD	425 -203
J650-5	SOD	425 -202
J650-6	SOD	424 - 25
J650-7	SOD	425 -200
J650-8	SOD	417 -181
J650-9	SOD	427 -183
J650-10	SOD	424 - 1
J650-11	SOD	425 -193
J650-12	SOD	423 -210
J650-13	SOD	425 -191
J650-14	SOD	427 -155
J650-15	SOD	429 -103
J775-0	♦SOD	369 -173
J775-1	♦SOD	369 -196
J775-2	♦SOD	370 - 5
J775-3	♦SOD	370 - 36
J775-4	♦SOD	370 - 42
J775-6	♦SOD	370 - 77
J775-8	♦SOD	370 -105
JD2300-1	POS	313 - 6
JD2300-2	POS	313 - 8
JD2300-4	POS	313 - 11
JD2300-6	POS	313 - 14
JD2300-8	POS	313 - 17
JD2300-10	POS	405 - 38
JD2300-12	POS	408 -153
JD2300-14	POS	410 -185
JD2300-16	POS	413 -124
JD2300-18	POS	414 -119
JD2300-20	POS	416 - 4
JD2300-22	POS	416 -139
JD2300-24	POS	417 - 80
JD2300-26	POS	418 -111
JD2300-28	POS	418 -217
JD2300-30	POS	420 - 19

TYPE No.	MFRS	Pg&Line
JD2300-32	POS	420 -106
JD2300-34	POS	420 -165
JD2300-36	POS	421 - 54
JD2300-38	POS	421 -109
JD2300-40	POS	422 - 83
JD2300-42	POS	422 -131
JD2300-44	POS	422 -183
JD3000-1	POS	313 - 78
JD3000-2	POS	313 - 80
JD3000-4	POS	313 - 83
JD3000-6	POS	313 - 86
JD3000-8	POS	313 - 88
JD3000-10	POS	405 - 51
JD3000-12	POS	408 -166
JD3000-14	POS	410 -194
JD3000-16	POS	413 -137
JD3000-18	POS	414 -133
JD3000-20	POS	416 - 19
JD3000-22	POS	416 -153
JD3000-24	POS	417 - 95
JD3000-26	POS	418 -117
JD3000-28	POS	419 - 5
JD3000-30	POS	420 - 23
JD4000-1	POS	313 -104
JD4000-2	POS	313 -106
JD4000-3	POS	313 -107
JD4000-4	POS	313 -108
JD4000-5	POS	313 -109
JD4000-6	POS	313 -110
JD4000-7	POS	313 -111
JD4000-8	POS	313 -112
JD4000-9	POS	313 -113
JD4000-10	POS	405 - 54
JD4000-11	POS	405 -188
JD4000-12	POS	408 -170
JD4000-13	POS	409 - 53
JD4000-14	POS	410 -198
JD4000-15	POS	412 - 10
JD4000-16	POS	413 -139
JD4000-17	POS	413 -190
JD4000-18	POS	414 -136
JD4000-19	POS	414 -168
JD4000-20	POS	416 - 22
JD4000-21	POS	416 - 66
JD4000-22	POS	416 -158
JD4000-23	POS	416 -201
JD4000-24	POS	417 - 99
JD4000-25	POS	418 - 52
JD4500-1	POS	313 -115
JD4500-2	POS	313 -116
JD4500-3	POS	313 -117
JD4500-4	POS	313 -118
JD4500-5	POS	313 -119
JD4500-6	POS	313 -120
JD4500-7	POS	313 -121
JD4500-8	POS	313 -122
JD4500-9	POS	313 -123
JD4500-10	POS	405 - 55
JD4500-11	POS	405 -189
JD4500-12	POS	408 -171
JD5000-1	POS	313 -145
JD5000-2	POS	313 -146
JD5000-3	POS	313 -147
JD5000-4	POS	313 -148
JD5000-5	POS	313 -149
JD5000-6	POS	313 -150
JD6000-1	POS	313 -153
JD6000-2	POS	313 -155
JD6000-3	POS	313 -157
JD6000-4	POS	313 -159
JD6000-5	POS	313 -161
JD6000-6	POS	313 -163
JKV8	CSD	235 -172
JKV8F	CSD	242 - 26
JKV10	CSD	235 -173
JKV10F	CSD	242 - 49
JKV12	CSD	235 -174
JKV12F	CSD	242 - 74
JKV15	♦CSD	429 - 46
JKV15F	♦CSD	429 - 41
JPAD5	♦SIX	238 -135
JPAD10	♦SIX	238 -136
JPAD20	♦SIX	238 -137
JPAD50	♦SIX	238 -138
JPAD100	♦SIX	238 -139
JPAD200	♦SIX	238 -140
JPAD500	♦SIX	238 -141
JR135V	♦SIX	346 - 11
JR170V	♦SIX	346 - 12
JR200V	♦SIX	346 - 13
JR220V	♦SIX	346 - 14
JR240V	♦SIX	346 - 15
K1	CODI	432 - 23
K1A5	EDL	275 - 41
K1B5	EDL	275 - 55
K1C5	EDL	275 - 76
K1D5	EDL	275 - 94
K1E5	EDL	275 -109
K1F5	EDL	275 -123
K1G5	EDL	275 -135
K1H5	EDL	275 -147
K1K5	EDL	275 -155
K1M5	EDL	401 - 52
K1N5	EDL	405 -205
K2A5	EDL	276 - 54
K2B5	EDL	276 - 61
K2C5	EDL	276 - 71
K2D5	EDL	276 - 81
K2E5	EDL	276 - 93
K2F5	EDL	276 -100
K2G5	EDL	276 -108
K2H5	EDL	276 -110
K2K5	EDL	276 -112
K2M5	EDL	401 - 77

TYPE No.	MFRS	Pg&Line
K2N5	EDL	405 -212
K3A5	EDL	277 - 86
K3B5	EDL	277 -100
K3C5	EDL	277 -115
K3D5	EDL	277 -128
K3E5	EDL	277 -142
K3F5	EDL	277 -156
K3G5	EDL	277 -168
K3H5	EDL	277 -180
K3K5	EDL	277 -189
K3M5	EDL	401 -105
K3N5	EDL	406 - 9
K4A5	EDL	279 - 67
K4B5	EDL	279 - 73
K4C5	EDL	279 - 83
K4D5	EDL	279 - 89
K4E5	EDL	279 - 99
K4F5	EDL	279 -102
K4G5	EDL	279 -112
K4H5	EDL	279 -118
K4K5	EDL	279 -123
K4M5	EDL	401 -134
K4N5	EDL	406 - 29
K5A5	EDL	280 - 3
K5B5	EDL	280 - 74
K5C5	EDL	280 -166
K5D5	EDL	281 - 18
K5E5	EDL	281 - 73
K5F5	EDL	281 -143
K5G5	EDL	281 -188
K5H5	EDL	282 - 23
K5K5	EDL	282 - 57
K5M5	EDL	401 -184
K5N5	EDL	406 - 54
K6A5	EDL	282 -156
K6B5	EDL	282 -164
K6C5	EDL	282 -174
K6D5	EDL	282 -187
K6E5	EDL	282 -196
K6F5	EDL	282 -206
K6G5	EDL	282 -215
K6H5	EDL	283 - 9
K6K5	EDL	283 - 18
K6M5	EDL	402 - 24
K6N5	EDL	406 - 74
K7A5	EDL	283 - 91
K7B5	EDL	283 -142
K7C5	EDL	283 -207
K7D5	EDL	284 - 46
K7E5	EDL	284 - 94
K7F5	EDL	284 -151
K7G5	EDL	284 -196
K7H5	EDL	285 - 28
K7K5	EDL	285 - 57
K7M5	EDL	402 - 62
K7N5	EDL	406 - 94
K8A5	EDL	285 -213
K8B5	EDL	286 - 27
K8C5	EDL	286 - 68
K8D5	EDL	286 - 92
K8E5	EDL	286 -118
K8F5	EDL	286 -141
K8G5	EDL	286 -166
K8H5	EDL	286 -183
K8K5	EDL	286 -203
K8M5	EDL	402 -114
K8N5	EDL	406 -105
K20	MIC	445 - 57
K120	KSI	163 - 58
K120A	KSI	163 - 57
K150	KSI	163 - 89
K150A	KSI	163 - 88
K180	KSI	163 -107
K180A	KSI	163 -106
K210	KSI	163 -161
K210A	KSI	163 -160
K240	KSI	164 - 38
K240A	KSI	164 - 36
K270	KSI	164 -156
K270A	KSI	164 -153
K300	KSI	165 - 88
K300A	KSI	165 - 83
K330	KSI	166 - 22
K330A	KSI	166 - 13
K360	KSI	166 -198
K360A	KSI	166 -190
K390	KSI	167 -163
K390A	KSI	167 -155
K430	KSI	168 -182
K430A	KSI	168 -171
K470	KSI	170 - 21
K470A	KSI	170 - 4
K510	KSI	171 -103
K510A	KSI	171 - 86
K511	KSI	171 - 48
K511A	KSI	171 - 43
K561	KSI	172 -124
K561A	KSI	172 -118
K595-0G	♦SOD	365 -157
K595-1G	♦SOD	365 -165
K595-2G	♦SOD	365 -176
K595-3G	♦SOD	365 -187
K595-4G	♦SOD	365 -188
K595-5G	♦SOD	365 -200
K595-6G	♦SOD	365 -202
K595-7G	♦SOD	366 - 5
K595-8G	♦SOD	366 - 6
K621	KSI	174 -126
K621A	♦KSI	174 -120
K681	KSI	177 -165
K681A	KSI	177 -158
K760-0G	♦SOD	365 - 11
K760-1G	♦SOD	365 - 27
K760-2G	♦SOD	365 - 50

Δ-Registered with JEDEC by this manufacturer

♦-Mfr's data sheet available in microfilm service

1. TYPE No. CROSS INDEX

IN TYPE NUMBER SEQUENCE

TYPE No.	MFRS	Pg&Line
K760-4G	♦SOD	365 - 73
K760-6G	♦SOD	365 - 92
K760-8G	♦SOD	365 -113
K760-10G	♦SOD	365 -129
K850-0	♦SOD	367 - 98
K850-1	♦SOD	367 -126
K850-2	♦SOD	367 -161
K850-3	♦SOD	367 -198
K850-4	♦SOD	367 -203
K850-6	♦SOD	368 - 23
K850-8	♦SOD	368 - 58
K4540	♦CODI	248 -212
K4560	♦CODI	248 -213
K4590	♦CODI	248 -214
K-01	MEHK	369 -197
K-02	MEHK	370 - 6
K-04	MEHK	370 - 43
K-005	MEHK	369 -174
K-06	MEHK	370 - 78
KBC301	♦GIC	364 -106
KBC302	♦GIC	364 -116
KBC304	♦GIC	364 -133
KBC306	♦GIC	364 -148
KBC308	♦GIC	364 -163
KBC310	♦GIC	364 -178
KBC501	♦GIC	365 -167
KBC502	♦GIC	365 -179
KBC504	♦GIC	365 -191
KBC506	♦GIC	365 -203
KBC508	♦GIC	366 - 7
KBC510	♦GIC	366 - 13
KBC3005	♦GIC	364 - 92
KBC5005	♦GIC	365 -159
KBF01	♦FEC	364 - 25
KBF02	♦FEC	364 - 30
	♦GIC	
KBF04	♦FEC	364 - 37
	♦GIC	
KBF005	♦FEC	364 - 21
	♦GIC	
KBF06	♦FEC	364 - 42
	♦GIC	
KBF08	♦FEC	364 - 47
	♦GIC	
KBF10	♦FEC	364 - 49
	♦GIC	
KBL01	♦FEC	365 - 35
KBL02	♦FEC	364 -128
	♦GIC	
KBL04	♦FEC	364 -145
	♦GIC	
KBL005	♦FEC	364 -102
	♦GIC	
KBL06	♦FEC	364 -160
	♦GIC	
KBL08	♦FEC	364 -175
	♦GIC	
KBL10	♦FEC	364 -186
	♦GIC	
KBP01	♦FEC	361 -165
KBP02	♦FEC	361 -198
	♦GIC	
KBP04	♦FEC	362 - 34
	♦GIC	
KBP005	♦FEC	361 -139
	♦GIC	
KBP06	♦FEC	362 - 68
	♦GIC	
KBP08	♦FEC	362 - 95
	♦GIC	
KBP10	♦FEC	362 -114
	♦GIC	
KBPC02	♦GIC	364 -122
KBPC02A	♦GIC	364 -123
KBPC04	♦GIC	364 -139
KBPC04A	♦GIC	364 -140
KBPC005	♦GIC	364 - 98
KBPC06	♦GIC	364 -154
KBPC06A	♦GIC	364 -155
KBPC08	♦GIC	364 -169
KBPC08A	♦GIC	364 -170
KBPC10	♦GIC	364 -183
KBPC10-01	♦DGE	367 -141
	♦FEC	
KBPC10-02	♦DGE	367 -179
♦FEC	♦GIC	
KBPC10-04	♦DGE	367 -219
♦FEC	♦GIC	
KBPC10-005	♦DGE	367 -110
♦FEC	♦GIC	
KBPC10-06	♦DGE	368 - 37
♦FEC	♦GIC	
KBPC10-08	♦DGE	368 - 68
♦FEC	♦GIC	
KBPC10-10	♦DGE	368 - 86
♦FEC	♦GIC	
KBPC12-02	♦GIC	368 -132
KBPC12-04	♦GIC	368 -152
KBPC12-005	♦GIC	368 -107
KBPC12-06	♦GIC	368 -167
KBPC12-08	♦GIC	368 -181
KBPC12-10	♦GIC	368 -187
KBPC15-01	♦DGE	368 -217
	♦FEC	
KBPC15-02	♦DGE	369 - 21
♦FEC	♦GIC	
KBPC15-04	♦DGE	369 - 49
♦FEC	♦GIC	
KBPC15-005	♦DGE	368 -200
♦FEC	♦GIC	
KBPC15-06	♦DGE	369 - 73
♦FEC	♦GIC	
KBPC15-08	♦DGE	369 - 96
♦FEC	♦GIC	

TYPE No.	MFRS	Pg&Line
KBPC15-10	♦DGE	369 -110
♦FEC	♦GIC	
KBPC25-01	♦DGE	369 -206
	♦FEC	
KBPC25-02	♦DGE	370 - 17
♦FEC	♦GIC	
KBPC25-04	♦DGE	370 - 54
♦FEC	♦GIC	
KBPC25-005	♦DGE	369 -183
♦FEC	♦GIC	
KBPC25-06	♦DGE	370 - 89
♦FEC	♦GIC	
KBPC25-08	♦DGE	370 -112
♦FEC	♦GIC	
KBPC25-10	♦DGE	370 -129
♦FEC	♦GIC	
KBPC35-01	♦DGE	371 - 36
	♦FEC	
KBPC35-02	♦DGE	371 - 56
♦FEC	♦GIC	
KBPC35-04	♦DGE	371 - 73
♦FEC	♦GIC	
KBPC35-005	♦DGE	371 - 17
♦FEC	♦GIC	
KBPC35-06	♦DGE	371 - 89
♦FEC	♦GIC	
KBPC35-08	♦DGE	371 -105
♦FEC	♦GIC	
KBPC35-10	♦DGE	371 -117
♦FEC	♦GIC	
KBPC102	♦GIC	364 -124
KBPC102A	♦GIC	364 -125
KBPC104	♦GIC	364 -141
KBPC104A	♦GIC	364 -142
KBPC106	♦GIC	364 -156
KBPC106A	♦GIC	364 -157
KBPC108	♦GIC	364 -171
KBPC108A	♦GIC	364 -172
KBPC110	♦GIC	405 - 78
KBPC601	♦FEC	366 - 59
KBPC602	♦FEC	367 - 22
	♦GIC	
KBPC604	♦FEC	367 - 39
	♦GIC	
KBPC606	♦FEC	367 - 55
	♦GIC	
KBPC608	♦FEC	367 - 72
	♦GIC	
KBPC610	♦FEC	367 - 87
	♦GIC	
KBPC801	♦FEC	367 - 9
KBPC802	♦FEC	367 - 23
	♦GIC	
KBPC802T	♦GIC	367 - 24
KBPC804	♦FEC	367 - 40
	♦GIC	
KBPC804T	♦GIC	367 - 41
KBPC806	♦FEC	367 - 56
	♦GIC	
KBPC806T	♦GIC	367 - 57
KBPC808	♦FEC	367 - 73
	♦GIC	
KBPC808T	♦GIC	367 - 74
KBPC810	♦FEC	367 - 88
	♦GIC	
KBPC810T	♦GIC	367 - 89
KBPC1005	♦GIC	364 - 99
KBPC6005	♦FEC	366 -212
	♦GIC	
KBPC8005	♦FEC	366 -213
	♦GIC	
KBPC8005T	♦GIC	366 -214
KBPS-02	♦GIC	280 -145
KBPS-04	♦GIC	281 - 52
KBPS-005	♦GIC	279 -217
KBPS-06	♦GIC	281 -170
KBPS-08	♦GIC	282 - 43
KBPS-10	♦GIC	401 -167
KBU4A	♦GIC	365 - 12
KBU4B	♦GIC	365 - 28
KBU4D	♦GIC	365 - 51
KBU4G	♦GIC	365 - 74
KBU4J	♦GIC	365 - 93
KBU4K	♦GIC	365 -114
KBU4M	♦GIC	365 -130
KBU6A	♦GIC	366 - 41
KBU6B	♦GIC	366 - 65
KBU6D	♦GIC	366 - 92
KBU6G	♦GIC	366 -121
KBU6J	♦GIC	366 -149
KBU6K	♦GIC	366 -176
KBU6M	♦GIC	366 -194
KBU8A	♦GIC	367 - 3
KBU8B	♦GIC	367 - 16
KBU8D	♦GIC	367 - 33
KBU8G	♦GIC	367 - 49
KBU8J	♦GIC	367 - 66
KBU8K	♦GIC	367 - 81
KBU8M	♦GIC	367 - 94
KD102A	USSR	274 -146
KD102B	USSR	274 -148
KD103A	USSR	274 -115
KD103B	USSR	274 -116
KD104A	USSR	274 - 44
KD202A	USSR	287 -163
KD202B	USSR	279 -204
KD202D	USSR	288 - 66
KD202E	USSR	280 -133
KD202G	USSR	280 - 45
KD202I	USSR	281 - 5
KD202K	USSR	288 -168
KD202L	USSR	281 - 36
KD202M	USSR	289 - 13
KD202N	USSR	281 -129

TYPE No.	MFRS	Pg&Line
KD202R	USSR	289 - 32
KD202S	USSR	281 -156
KD202SZ	USSR	288 -137
KD202V	USSR	287 -215
KD204A	USSR	281 - 37
KD204B	USSR	277 -104
KD204V	USSR	276 - 53
KD205A	USSR	277 - 20
KD205B	USSR	276 -207
KD205D	USSR	276 -145
KD205E	USSR	276 - 23
KD205G	USSR	276 -171
KD205V	USSR	276 -195
KD206A	USSR	294 - 81
KD206B	USSR	294 -108
KD206V	USSR	294 -121
KD208A	USSR	283 -114
KD209A	USSR	277 -193
KD209B	USSR	277 -194
KD209V	USSR	277 - 56
KD229D	USSR	276 - 79
KD229E	USSR	276 - 90
KD503A	USSR	245 - 19
KD503B	USSR	245 - 20
KD514A	USSR	238 - 28
KD518A	USSR	234 - 87
KD519A	USSR	249 -145
KD520A	USSR	244 -120
KD521A	USSR	246 -129
KD521G	USSR	245 - 3
KD521V	USSR	245 -180
KD522A	USSR	245 - 4
KD522B	USSR	241 - 31
KD5051	♦PPC	239 -111
KD5052	♦PPC	239 -136
KD5053	♦PPC	239 -144
KD5054	♦PPC	239 -196
KD5055	♦PPC	239 -204
KD5056	♦PPC	239 -216
KD6000-1	POS	313 -152
KD6000-2	POS	313 -154
KD6000-3	POS	313 -156
KD6000-4	POS	313 -158
KD6000-5	POS	313 -160
KD6000-6	POS	313 -162
KGB0430SX	BBCG	303 -103
KGB0431SX	BBCG	303 -166
KGB0440SX	BBCG	303 - 83
KGB0521SX	BBCG	304 -108
KGB0522SX	BBCG	304 -170
KGB0523SX	BBCG	405 - 95
KGB0524SX	BBCG	409 -186
KGB0611SX	BBCG	307 - 2
KGB0612SX	BBCG	307 - 13
KGB0613SX	BBCG	405 -110
KGB0614SX	BBCG	410 - 22
KGB0711SX	BBCG	308 -129
KGB0712SX	BBCG	308 -134
KGB0713SX	BBCG	405 -120
KGB0714SX	BBCG	410 - 41
KGD1420SX	BBCG	302 -155
KGD1421SX	BBCG	302 -191
KGD1422SX	BBCG	303 - 11
KGD1423SX	BBCG	405 - 94
KGD1424SX	BBCG	409 -161
KGD1430SX	BBCG	304 - 3
KGD1431SX	BBCG	304 - 6
KGD1440SX	BBCG	304 - 2
KGD1521SX	BBCG	305 - 45
KGD1522SX	BBCG	305 - 54
KGD1523SX	BBCG	405 - 97
KGD1524SX	BBCG	409 -197
KGD1611SX	BBCG	307 -148
KGD1612SX	BBCG	308 - 8
KGD1613SX	BBCG	405 -113
KGD1614SX	BBCG	410 - 26
KGD1711SX	BBCG	309 - 6
KGD1712SX	BBCG	309 - 13
KGD1713SX	BBCG	405 -121
KGD1714SX	BBCG	410 - 53
KHP3	♦EDI	419 -158
KHP4	♦EDI	422 - 21
KHP5	♦EDI	424 - 16
KHP6	♦EDI	425 - 8
KHP7	♦EDI	425 -110
KHP8	♦EDI	426 -105
KHP9	♦EDI	426 -184
KHP10	♦EDI	427 -185
KHP15	♦EDI	429 -145
KHP20	♦EDI	430 -198
KHP25	♦EDI	431 -160
KHP30	♦EDI	432 - 91
KHP35	♦EDI	432 -140
KHP40	♦EDI	432 -198
KHP45	♦EDI	433 - 24
KHP50	♦EDI	433 - 73
KL5	CODI	423 - 70
KL10	CODI	427 - 27
KL15	CODI	429 - 27
KL20	CODI	430 -119
KL25	CODI	431 - 92
KL30	CODI	432 - 35
KL35	CODI	432 -118
KL40	CODI	432 -163
KL45	CODI	432 -217
KL50	CODI	433 - 45
KLR5	CODI	423 - 64
KLR10	CODI	427 - 15
KLR15	CODI	429 - 16
KLR20	CODI	430 -108
KLR25	CODI	431 - 85
KS77B	♦FERB	184 - 10
KS78	♦FERB	184 - 11
KS78B	♦FERB	184 - 12

TYPE No.	MFRS	Pg&Line
KS196A	USSR	186 -112
KS196B	USSR	186 -113
KS196G	USSR	186 -114
KS196V	USSR	186 -115
KS433A	USSR	166 - 85
KS439A	USSR	168 - 33
KS447A	USSR	170 -109
KS456A	USSR	173 - 78
KS468A	USSR	178 -135
KS482A	USSR	182 -116
KS510A	USSR	188 - 2
KS512A	USSR	191 - 91
KS515A	USSR	195 - 90
KS518A	USSR	198 -198
KS522A	USSR	202 - 88
KS527A	USSR	205 -126
KS620A	USSR	396 -153
KS630A	USSR	397 - 42
KS650A	USSR	397 -179
KS680A	USSR	398 -182
KU1002	♦THEF	306 - 3
KU1002F	♦THEF	263 - 98
KU1003F	♦THEF	263 -100
KU1004	♦THEF	306 - 56
KU1004F	♦THEF	263 -105
KU1006	♦THEF	306 -106
KU1006F	♦THEF	263 -108
KU1008	♦THEF	306 -158
KU1008F	♦THEF	263 -111
KU1010	♦THEF	404 - 64
KU1010F	♦THEF	263 -114
KU1012	♦THEF	407 -150
KU1012F	♦THEF	263 -115
KU1014	♦THEF	410 - 4
KU1302	♦THEF	307 - 23
KU1304	♦THEF	307 - 30
KU1306	♦THEF	307 - 35
KU1308	♦THEF	307 - 36
KU1310	♦THEF	404 - 84
KU1312	♦THEF	407 -177
KU1314	♦THEF	410 - 25
KU1502	♦THEF	306 - 4
KU1504	♦THEF	306 - 57
KU1506	♦THEF	306 -107
KU1508	♦THEF	306 -159
KU1510	♦THEF	404 - 65
KU1512	THEF	407 -151
KU1514	THEF	410 - 5
KV05	EDI	423 -189
KV08	EDI	426 - 90
KV010	EDI	427 -148
KV012	EDI	428 -128
KV3111	GHZ	444 - 53
KVF5	♦EDI	423 -158
KVF7.5	♦EDI	425 -162
KVF10	♦EDI	427 -119
KVF12.5	♦EDI	428 -109
KVF15	♦EDI	429 - 89
KVF20	♦EDI	430 -171
KVF25	♦EDI	431 -134
KVP5	♦EDI	423 -195
KVP6	♦EDI	424 -215
KVP7	♦EDI	425 -100
KVP8	♦EDI	426 - 91
KVP9	♦EDI	426 -178
KVP10	♦EDI	427 -149
KVP15	♦EDI	429 -112
KVP20	♦EDI	430 -180
KVP25	♦EDI	431 -144
KVP30	♦EDI	432 - 76
KVP35	♦EDI	432 -131
KVP40	♦EDI	432 -185
KVP45	♦EDI	433 - 15
KVP50	♦EDI	433 - 61
KX15	♦UNI	411 -103
KX20	♦UNI	415 - 77
KX25	♦UNI	417 -178
KX30	♦UNI	419 -153
KX40	♦UNI	422 - 15
KX50	♦UNI	424 - 3
KX60	♦UNI	424 -219
KX80	♦UNI	426 - 93
KX100	♦UNI	427 -166
KXS15	♦UNI	411 -104
KXS20	♦UNI	415 - 78
KXS25	♦UNI	417 -179
KXS30	♦UNI	419 -154
KXS40	♦UNI	422 - 16
KXS50	♦UNI	422 - 17
KXS60	♦UNI	425 - 1
KXS80	♦UNI	426 - 94
KXS100	♦UNI	427 -167
KZ6.8	SAR	324 - 98
KZ6.8A	SAR	324 - 99
KZ7.5	SAR	324 -100
KZ7.5A	SAR	324 -101
KZ8.2	SAR	324 -102
KZ8.2A	SAR	324 -103
KZ9.1	SAR	324 -104
KZ9.1A	SAR	324 -105
KZ10	SAR	324 -106
KZ10A	SAR	324 -107
KZ11	SAR	324 -108
KZ11A	SAR	324 -109
KZ12	SAR	324 -110
KZ12A	SAR	325 - 1
KZ13	SAR	325 - 2
KZ13A	SAR	325 - 3
KZ15	SAR	325 - 4
KZ15A	SAR	325 - 5
KZ16	SAR	325 - 6
KZ16A	SAR	325 - 7
KZ18	SAR	325 - 8
KZ18A	SAR	325 - 9

TYPE No.	MFRS	Pg&Line
KZ20	SAR	325 - 10
KZ20A	SAR	325 - 11
KZ22	SAR	325 - 12
KZ22A	SAR	325 - 13
KZ24	SAR	325 - 14
KZ24A	SAR	325 - 15
KZ27	SAR	325 - 16
KZ27A	SAR	325 - 17
KZ30	SAR	325 - 18
KZ30A	SAR	325 - 19
KZ33	SAR	325 - 20
KZ33A	SAR	325 - 21
KZ36	SAR	325 - 22
KZ36A	SAR	325 - 23
KZ39	SAR	325 - 24
KZ39A	SAR	325 - 25
KZ43	SAR	325 - 26
KZ43A	GHZ	168 -172
	♦KSI	
KZ43A#B	SAR	325 - 27
KZ43B	GHZ	168 -152
KZ43C	GHZ	168 -144
KZ47	SAR	325 - 28
KZ47A	GHZ	170 - 5
	♦KSI	
KZ47A#B	SAR	325 - 29
KZ47B	GHZ	169 -190
KZ47C	GHZ	169 -182
KZ51	SAR	325 - 30
KZ51A	GHZ	171 - 87
	♦KSI	
KZ51A#B	SAR	325 - 31
KZ51B	GHZ	171 - 66
KZ51C	GHZ	171 - 58
KZ56	SAR	325 - 32
KZ56A	GHZ	172 -174
	♦KSI	
KZ56A#B	SAR	325 - 33
KZ56B	GHZ	172 -147
KZ56C	GHZ	172 -138
KZ62	SAR	325 - 34
KZ62A	GHZ	174 -203
	♦KSI	
KZ62A#B	SAR	325 - 35
KZ62B	GHZ	174 -160
KZ62C	GHZ	174 -150
KZ68	SAR	325 - 36
KZ68A	GHZ	177 -212
	♦KSI	
KZ68A#B	SAR	325 - 37
KZ68B	GHZ	177 -185
KZ68C	GHZ	177 -175
KZ75	SAR	325 - 38
KZ75A	GHZ	179 -199
	♦KSI	
KZ75A#B	SAR	325 - 39
KZ75B	GHZ	179 -176
KZ75C	GHZ	179 -169
KZ82	SAR	325 - 40
KZ82A	GHZ	181 -178
	♦KSI	
KZ82A#B	SAR	325 - 41
KZ82B	GHZ	181 -157
KZ82C	GHZ	181 -150
KZ91	SAR	325 - 42
KZ91A	GHZ	185 - 10
	♦KSI	
KZ91A#B	SAR	325 - 43
KZ91B	GHZ	184 -206
KZ91C	GHZ	184 -197
KZ100	SAR	325 - 44
KZ100A	GHZ	187 - 53
	♦KSI	
KZ100A#B	SAR	325 - 45
KZ100B	GHZ	187 - 30
KZ100C	GHZ	187 - 22
KZ110	SAR	325 - 46
KZ110A#B	SAR	325 - 47
KZ120	SAR	325 - 48
KZ120A	SAR	325 - 49
KZ130	SAR	325 - 50
KZ130A	SAR	325 - 51
KZ150	SAR	325 - 52
KZ150A	SAR	325 - 53
KZ160	SAR	325 - 54
KZ160A	SAR	325 - 55
KZ180	SAR	325 - 56
KZ180A	SAR	325 - 57
KZ200	SAR	325 - 58
KZ200A	SAR	325 - 59
KZ343A	♦KSI	168 -173
KZ347A	♦KSI	170 - 6
KZ351A	♦KSI	171 - 88
KZ356A	♦KSI	172 -175
KZ362A	♦KSI	174 -204
KZ368A	♦KSI	177 -213
KZ375A	♦KSI	179 -200
KZ382A	♦KSI	181 -179
KZ391A	♦KSI	185 - 11
KZ450	♦KSI	171 - 3
KZ450A	GHZ	170 -208
KZ450B	GHZ	170 -206
KZ450C	GHZ	170 -203
KZ453	♦KSI	172 - 50
KZ453A	GHZ	172 - 45
KZ453B	GHZ	172 - 44
KZ453C	GHZ	172 - 41
KZ456	♦KSI	172 -176
KZ456A	GHZ	172 -153
KZ456B	GHZ	172 -152
KZ456C	GHZ	172 -148
KZ459	♦KSI	173 -181
KZ459A	GHZ	173 -176
KZ459B	GHZ	173 -173

Δ-Registered with JEDEC by this manufacturer

♦-Mfr's data sheet available in microfilm service

1. TYPE No. CROSS INDEX

IN TYPE NUMBER SEQUENCE

TYPE No.	MFRS	Pg&Line
KZ459C	GHZ	173 -170
KZ462	♦KSI	174 -205
KZ462A	GHZ	174 -165
KZ462B	GHZ	174 -161
KZ462C	GHZ	174 -151
KZ465	♦KSI	177 - 33
KZ465A	GHZ	177 - 2
KZ465B	GHZ	176 -212
KZ465C	GHZ	176 -209
KZ468	♦KSI	177 -214
KZ468A	GHZ	177 -190
KZ468B	GHZ	177 -186
KZ468C	GHZ	177 -176
KZ471	♦KSI	179 - 56
KZ471A	GHZ	179 - 52
KZ471B	GHZ	179 - 49
KZ471C	GHZ	179 - 46
KZ474	♦KSI	179 -109
KZ474A	GHZ	179 -105
KZ474B	GHZ	179 -100
KZ474C	GHZ	179 - 97
KZ477	♦KSI	181 - 23
KZ477A	GHZ	181 - 19
KZ477B	GHZ	181 - 14
KZ477C	GHZ	181 - 11
KZ480	♦KSI	181 - 76
KZ480A	GHZ	181 - 72
KZ480B	GHZ	181 - 69
KZ480C	GHZ	181 - 66
KZ483	♦KSI	182 -207
KZ483A	GHZ	182 -204
KZ483B	GHZ	182 -199
KZ483C	GHZ	182 -194
KZ486	♦KSI	183 -122
KZ486A	GHZ	183 -118
KZ486B	GHZ	183 -112
KZ486C	GHZ	183 -113
KZ489	♦KSI	184 - 5
KZ489A	GHZ	184 - 1
KZ489B	GHZ	183 -211
KZ489C	GHZ	183 -212
KZ492	♦KSI	186 - 34
KZ492A	GHZ	186 - 30
KZ492B	GHZ	186 - 24
KZ492C	GHZ	186 - 25
KZ495	♦KSI	186 -106
KZ495A	GHZ	186 -102
KZ495B	GHZ	186 - 94
KZ495C	GHZ	186 - 95
KZ498	♦KSI	186 -148
KZ498A	GHZ	186 -144
KZ498B	GHZ	186 -138
KZ498C	GHZ	186 -139
KZ3100A	♦KSI	187 - 54
L4B5.1	♦SLCB	346 - 16
L4B5.6	♦SLCB	346 - 17
L4B6.2	♦SLCB	346 - 18
L4B6.8	♦SLCB	346 - 19
L4B7.5	♦SLCB	346 - 20
L4B8.2	♦SLCB	346 - 21
L4B9.1	♦SLCB	346 - 22
L4B10	♦SLCB	346 - 23
L4B11	♦SLCB	346 - 24
L4B12	♦SLCB	346 - 25
L4B13	♦SLCB	346 - 26
L4B15	♦SLCB	346 - 27
L4B16	♦SLCB	346 - 28
L4B18	♦SLCB	346 - 29
L4B20	♦SLCB	346 - 30
L4B22	♦SLCB	346 - 31
L4B24	♦SLCB	346 - 32
L4B27	♦SLCB	346 - 33
L4B30	♦SLCB	346 - 34
L4B33	♦SLCB	346 - 35
L4B36	♦SLCB	346 - 36
L4B39	♦SLCB	346 - 37
L4B43	♦SLCB	346 - 38
L4B47	♦SLCB	346 - 39
L4B51	♦SLCB	346 - 40
L4B56	♦SLCB	346 - 41
L4B62	SLCB	346 - 42
L4B68	SLCB	346 - 43
L4B75	SLCB	346 - 44
L4B82	SLCB	346 - 45
L4B91	SLCB	346 - 46
L4B100	SLCB	346 - 47
L4B110	SLCB	346 - 48
L4B120	SLCB	346 - 49
L4B130	SLCB	346 - 50
L4B150	SLCB	346 - 51
L4B160	SLCB	346 - 52
L4B180	SLCB	346 - 53
L4B200	SLCB	346 - 54
L4H5.4	SLCB	346 - 55
L4H6.2A	SLCB	346 - 56
L6B5.1	♦SLCB	346 - 57
L6B5.6	♦SLCB	346 - 58
L6B6.2	♦SLCB	346 - 59
L6B6.8	♦SLCB	346 - 60
L6B7.5	♦SLCB	346 - 61
L6B8.2	♦SLCB	346 - 62
L6B9.1	♦SLCB	346 - 63
L6B10	♦SLCB	346 - 64
L6B11	♦SLCB	346 - 65
L6B12	♦SLCB	346 - 66
L6B13	♦SLCB	346 - 67
L6B15	♦SLCB	346 - 68
L6B16	♦SLCB	346 - 69
L6B18	♦SLCB	346 - 70
L6B20	♦SLCB	346 - 71
L6B22	♦SLCB	346 - 72
L6B24	♦SLCB	346 - 73
L6B27	♦SLCB	346 - 74
L6B30	♦SLCB	346 - 75

TYPE No.	MFRS	Pg&Line
L6B33	♦SLCB	346 - 76
L6B36	♦SLCB	346 - 77
L6B39	♦SLCB	346 - 78
L6B43	♦SLCB	346 - 79
L6B47	♦SLCB	346 - 80
L6B51	♦SLCB	346 - 81
L6B56	♦SLCB	346 - 82
L6B62	SLCB	346 - 83
L6B68	SLCB	346 - 84
L6B75	SLCB	346 - 85
L6B82	SLCB	346 - 86
L6B91	SLCB	346 - 87
L6B100	SLCB	346 - 88
L6B110	SLCB	346 - 89
L6B120	SLCB	346 - 90
L6B130	SLCB	346 - 91
L6B150	SLCB	346 - 92
L6B160	SLCB	346 - 93
L6B180	SLCB	346 - 94
L6B200	SLCB	346 - 95
L6H5.4	SLCB	346 - 96
L6H6.2A	SLCB	346 - 97
L07C	♦HITJ	306 - 20
L07E	♦HITJ	306 - 78
L07G	♦HITJ	306 -162
L07J	♦HITJ	404 - 68
L07L	♦HITJ	409 - 1
L07M	♦HITJ	412 -206
L07N	♦HITJ	414 - 20
L7B5.1	♦SLCB	346 - 98
L7B5.6	♦SLCB	346 - 99
L7B6.2	♦SLCB	346 -100
L7B6.8	♦SLCB	346 -101
L7B7.5	♦SLCB	346 -102
L7B8.2	♦SLCB	346 -103
L7B9.1	♦SLCB	346 -104
L7B10	♦SLCB	346 -105
L7B11	♦SLCB	346 -106
L7B12	♦SLCB	346 -107
L7B13	♦SLCB	346 -108
L7B15	♦SLCB	346 -109
L7B16	♦SLCB	346 -110
L7B18	♦SLCB	347 - 1
L7B20	♦SLCB	347 - 2
L7B22	♦SLCB	347 - 3
L7B24	♦SLCB	347 - 4
L7B27	♦SLCB	347 - 5
L7B30	♦SLCB	347 - 6
L7B33	♦SLCB	347 - 7
L7B36	♦SLCB	347 - 8
L7B39	♦SLCB	347 - 9
L7B43	♦SLCB	347 - 10
L7B47	♦SLCB	347 - 11
L7B51	♦SLCB	347 - 12
L7B56	♦SLCB	347 - 13
L7B62	SLCB	347 - 14
L7B68	SLCB	347 - 15
L7B75	SLCB	347 - 16
L7B82	SLCB	347 - 17
L7B91	SLCB	347 - 18
L7B100	SLCB	347 - 19
L7B110	SLCB	347 - 20
L7B120	SLCB	347 - 21
L7B130	SLCB	347 - 22
L7B150	SLCB	347 - 23
L7B160	SLCB	347 - 24
L7B180	SLCB	347 - 25
L7B200	SLCB	347 - 26
L7H5.4	SLCB	347 - 27
L7H6.2A	SLCB	347 - 28
L08C	♦HITJ	306 - 16
L08E	♦HITJ	306 - 76
L08G	♦HITJ	306 -148
L08J	♦HITJ	404 - 61
L08L	♦HITJ	408 -218
L08M	♦HITJ	412 -199
L08N	♦HITJ	414 - 18
L8B5.1	♦SLCB	347 - 29
L8B5.6	♦SLCB	347 - 30
L8B6v8C	SLCB	325 - 60
L8B6.2	♦SLCB	347 - 31
L8B6.8	♦SLCB	347 - 32
L8B7v5C	SLCB	325 - 61
L8B7.5	♦SLCB	347 - 33
L8B8v2C	SLCB	325 - 62
L8B8.2	♦SLCB	347 - 34
L8B9v1C	SLCB	325 - 63
L8B9.1	♦SLCB	347 - 35
L8B10	♦SLCB	347 - 36
L8B10C	SLCB	325 - 64
L8B11	♦SLCB	347 - 37
L8B11C	SLCB	325 - 65
L8B12	♦SLCB	347 - 38
L8B12C	SLCB	325 - 66
L8B13	♦SLCB	347 - 39
L8B13C	SLCB	325 - 67
L8B15	♦SLCB	347 - 40
L8B15C	SLCB	325 - 68
L8B16	♦SLCB	347 - 41
L8B18	♦SLCB	347 - 42
L8B18C	SLCB	325 - 69
L8B20	♦SLCB	347 - 43
L8B20C	SLCB	325 - 70
L8B22	♦SLCB	347 - 44
L8B22C	SLCB	325 - 71
L8B24	♦SLCB	347 - 45
L8B24C	SLCB	325 - 72
L8B27	♦SLCB	347 - 46
L8B27C	SLCB	325 - 73
L8B30	♦SLCB	347 - 47
L8B30C	SLCB	325 - 74
L8B33	♦SLCB	347 - 48
L8B33C	SLCB	325 - 75
L8B36	♦SLCB	347 - 49

TYPE No.	MFRS	Pg&Line
L8B36C	SLCB	325 - 76
L8B39	♦SLCB	347 - 50
L8B39C	SLCB	325 - 77
L8B43	♦SLCB	347 - 51
L8B43C	SLCB	325 - 78
L8B47	♦SLCB	347 - 52
L8B47C	SLCB	325 - 79
L8B51	SLCB	347 - 53
L8B51C	SLCB	325 - 80
L8B56	♦SLCB	347 - 54
L8B56C	SLCB	325 - 81
L8B62	SLCB	347 - 55
L8B62C	SLCB	325 - 82
L8B68	SLCB	347 - 56
L8B68C	SLCB	325 - 83
L8B75	SLCB	347 - 57
L8B75C	SLCB	325 - 84
L8B82	SLCB	347 - 58
L8B82C	SLCB	325 - 85
L8B91	SLCB	347 - 59
L8B91C	SLCB	325 - 86
L8B100	SLCB	347 - 60
L8B100C	SLCB	325 - 87
L8B110	SLCB	347 - 61
L8B110C	SLCB	325 - 88
L8B120	SLCB	347 - 62
L8B120C	SLCB	325 - 89
L8B130	SLCB	347 - 63
L8B130C	SLCB	325 - 90
L8B150	SLCB	347 - 64
L8B150C	SLCB	325 - 91
L8B160	SLCB	347 - 65
L8B160C	SLCB	325 - 92
L8B170C	SLCB	325 - 93
L8B180	SLCB	347 - 66
L8B180C	SLCB	325 - 94
L8B200	SLCB	347 - 67
L8B200C	SLCB	325 - 95
L8B220C	SLCB	325 - 96
L8B250C	SLCB	325 - 97
L8B300C	SLCB	325 - 98
L8B350C	SLCB	325 - 99
L8B400C	SLCB	325 -100
L8C6v8C	SLCB	325 -101
L8C7v5C	SLCB	325 -102
L8C8v2C	SLCB	325 -103
L8C9v1C	SLCB	325 -104
L8C10C	SLCB	325 -105
L8C11C	SLCB	325 -106
L8C12C	SLCB	325 -107
L8C13C	SLCB	325 -108
L8C15C	SLCB	325 -109
L8C16C	SLCB	325 -110
L8C18C	SLCB	326 - 1
L8C20C	SLCB	326 - 2
L8C22C	SLCB	326 - 3
L8C24C	SLCB	326 - 4
L8C27C	SLCB	326 - 5
L8C30C	SLCB	326 - 6
L8C33C	SLCB	326 - 7
L8C36C	SLCB	326 - 8
L8C39C	SLCB	326 - 9
L8C43C	SLCB	326 - 10
L8C47C	SLCB	326 - 11
L8C51C	SLCB	326 - 12
L8C56C	SLCB	326 - 13
L8C62C	SLCB	326 - 14
L8C68C	SLCB	326 - 15
L8C75C	SLCB	326 - 16
L8C82C	SLCB	326 - 17
L8C91C	SLCB	326 - 18
L8C100C	SLCB	326 - 19
L8C110C	SLCB	326 - 20
L8C120C	SLCB	326 - 21
L8C130C	SLCB	326 - 22
L8C150C	SLCB	326 - 23
L8C160C	SLCB	326 - 24
L8C170C	SLCB	326 - 25
L8C180C	SLCB	326 - 26
L8C200C	SLCB	326 - 27
L8C220C	SLCB	326 - 28
L8C250C	SLCB	326 - 29
L8C300C	SLCB	326 - 30
L8C350C	SLCB	326 - 31
L8C400C	SLCB	326 - 32
L8H5.4	SLCB	347 - 68
L8H6.2A	SLCB	347 - 69
L9B5.1	♦SLCB	347 - 70
L9B5.6	♦SLCB	347 - 71
L9B6.2	♦SLCB	347 - 72
L9B6.8	♦SLCB	347 - 73
L9B7.5	♦SLCB	347 - 74
L9B8.2	♦SLCB	347 - 75
L9B9.1	♦SLCB	347 - 76
L9B10	♦SLCB	347 - 77
L9B11	♦SLCB	347 - 78
L9B12	♦SLCB	347 - 79
L9B13	♦SLCB	347 - 80
L9B15	♦SLCB	347 - 81
L9B16	♦SLCB	347 - 82
L9B18	♦SLCB	347 - 83
L9B20	♦SLCB	347 - 84
L9B22	♦SLCB	347 - 85
L9B24	♦SLCB	347 - 86
L9B27	♦SLCB	347 - 87
L9B30	♦SLCB	347 - 88
L9B33	♦SLCB	347 - 89
L9B36	♦SLCB	347 - 90
L9B39	♦SLCB	347 - 91
L9B43	♦SLCB	347 - 92
L9B47	♦SLCB	347 - 93
L9B51	♦SLCB	347 - 94
L9B56	♦SLCB	347 - 95
L9B62	SLCB	347 - 96

TYPE No.	MFRS	Pg&Line
L9B68	SLCB	347 - 97
L9B75	SLCB	347 - 98
L9B82	SLCB	347 - 99
L9B91	SLCB	347 -100
L9B100	SLCB	347 -101
L9B110	SLCB	347 -102
L9B120	SLCB	347 -103
L9B130	SLCB	347 -104
L9B150	SLCB	347 -105
L9B160	SLCB	347 -106
L9B180	SLCB	347 -107
L9B200	SLCB	347 -108
L9H5.4	SLCB	347 -109
L9H6.2A	SLCB	347 -110
LA80#B	♦UNI	248 - 32
LBA-01Z1	ORIJ	360 -129
LBA-02	ORIJ	360 -162
LBA-02Z1	ORIJ	360 -163
LBA-04	ORIJ	360 -197
LBA-04Z1	ORIJ	360 -198
LBA-06	ORIJ	361 - 20
LBA-08	ORIJ	360 - 63
LBA-10	ORIJ	401 -135
LC6.5	♦GSE	348 - 1
LC6.5A	♦GSE	348 - 2
LC7.0	♦GSE	348 - 3
LC7.0A	♦GSE	348 - 4
LC7.5	♦GSE	348 - 5
LC7.5A	♦GSE	348 - 6
LC8.0	♦GSE	348 - 7
LC8.0A	♦GSE	348 - 8
LC8.5	♦GSE	348 - 9
LC8.5A	♦GSE	348 - 10
LC9.0	♦GSE	348 - 11
LC9.0A	♦GSE	348 - 12
LC10	♦GSE	348 - 13
LC10A	♦GSE	348 - 14
LC11	♦GSE	348 - 15
LC11A	♦GSE	348 - 16
LC12	♦GSE	348 - 17
LC12A	♦GSE	348 - 18
LC13	♦GSE	348 - 19
LC13A	♦GSE	348 - 20
LC14	♦GSE	348 - 21
LC14A	♦GSE	348 - 22
LC15	♦GSE	348 - 23
	♦UNI	
LC15A	♦GSE	348 - 24
LC16	♦GSE	348 - 25
LC16A	♦GSE	348 - 26
LC17	♦GSE	348 - 27
LC17A	♦GSE	348 - 28
LC18	♦GSE	348 - 29
LC18A	♦GSE	348 - 30
LC20	♦GSE	348 - 31
LC20A	♦GSE	348 - 32
LC22	♦GSE	348 - 33
LC22A	♦GSE	348 - 34
LC24	♦GSE	348 - 35
LC24A	♦GSE	348 - 36
LC26	♦GSE	348 - 37
LC26A	♦GSE	348 - 38
LC28	♦GSE	348 - 39
LC28A	♦GSE	348 - 40
LC30	♦GSE	348 - 41
LC30A	♦GSE	348 - 42
LC33	♦GSE	348 - 43
LC33A	♦GSE	348 - 44
LC36	♦GSE	348 - 45
LC36A	♦GSE	348 - 46
LC40	♦GSE	348 - 47
LC40A	♦GSE	348 - 48
LC43	♦GSE	348 - 49
LC43A	♦GSE	348 - 50
LC45	♦GSE	348 - 51
LC45A	♦GSE	348 - 52
LC48	♦GSE	348 - 53
LC48A	♦GSE	348 - 54
LC51	♦GSE	348 - 55
LC51A	♦GSE	348 - 56
LC54	♦GSE	348 - 57
LC54A	♦GSE	348 - 58
LC58	♦GSE	348 - 59
LC58A	♦GSE	348 - 60
LC60	♦GSE	348 - 61
LC60A	♦GSE	348 - 62
LC64	♦GSE	348 - 63
LC64A	♦GSE	348 - 64
LC70	♦GSE	348 - 65
LC70A	♦GSE	348 - 66
LC75	♦GSE	348 - 67
LC75A	♦GSE	348 - 68
LC80	♦GSE	348 - 69
LC80A	♦GSE	348 - 70
LC90	♦GSE	348 - 71
LC90A	♦GSE	348 - 72
LC100	♦GSE	348 - 73
LC100A	♦GSE	348 - 74
LC110	♦GSE	348 - 75
LC110A	♦GSE	348 - 76
LC120	♦GSE	348 - 77
LC120A	♦GSE	348 - 78
LC130	♦GSE	348 - 79
LC130A	♦GSE	348 - 80
LC150	♦GSE	348 - 81
LC150A	♦GSE	348 - 82
LC160	♦GSE	348 - 83
LC160A	♦GSE	348 - 84
LC170	♦GSE	348 - 85
LC170A	♦GSE	348 - 86
LCC2	♦SCN	348 - 87
LCC3	♦SCN	348 - 88
LCC4	♦SCN	348 - 89
LCC5	♦SCN	348 - 90

TYPE No.	MFRS	Pg&Line
LCC6	♦SCN	348 - 91
LCC7	♦SCN	348 - 92
LCC8	♦SCN	348 - 93
LCC9	♦SCN	348 - 94
LCC10	♦SCN	348 - 95
LCC11	♦SCN	348 - 96
LCC12	♦SCN	348 - 97
LCC13	♦SCN	348 - 98
LCC14	♦SCN	348 - 99
LCC15	♦SCN	348 -100
LCC16	♦SCN	348 -101
LCE6.5	GSE	348 -102
LCE6.5A	GSE	348 -103
LCE7.0	GSE	348 -104
LCE7.0A	GSE	348 -105
LCE7.5	GSE	348 -106
LCE7.5A	GSE	348 -107
LCE8.0	GSE	348 -108
LCE8.0A	GSE	348 -109
LCE8.5	GSE	348 -110
LCE8.5A	GSE	349 - 1
LCE9.0	GSE	349 - 2
LCE9.0A	GSE	349 - 3
LCE10	GSE	349 - 4
LCE10A	GSE	349 - 5
LCE11	GSE	349 - 6
LCE11A	GSE	349 - 7
LCE12	GSE	349 - 8
LCE12A	GSE	349 - 9
LCE13	GSE	349 - 10
LCE13A	GSE	349 - 11
LCE14	GSE	349 - 12
LCE14A	GSE	349 - 13
LCE15	GSE	349 - 14
LCE15A	GSE	349 - 15
LCE16	GSE	349 - 16
LCE16A	GSE	349 - 17
LCE17	GSE	349 - 18
LCE17A	GSE	349 - 19
LCE18	GSE	349 - 20
LCE18A	GSE	349 - 21
LCE20	GSE	349 - 22
LCE20A	GSE	349 - 23
LCE22	GSE	349 - 24
LCE22A	GSE	349 - 25
LCE24	GSE	349 - 26
LCE24A	GSE	349 - 27
LCE26	GSE	349 - 28
LCE26A	GSE	349 - 29
LCE28	GSE	349 - 30
LCE28A	GSE	349 - 31
LCE30	GSE	349 - 32
LCE30A	GSE	349 - 33
LCE33	GSE	349 - 34
LCE33A	GSE	349 - 35
LCE36	GSE	349 - 36
LCE36A	GSE	349 - 37
LCE40	GSE	349 - 38
LCE40A	GSE	349 - 39
LCE43	GSE	349 - 40
LCE43A	GSE	349 - 41
LCE45	GSE	349 - 42
LCE45A	GSE	349 - 43
LCE48	GSE	349 - 44
LCE48A	GSE	349 - 45
LCE51	GSE	349 - 46
LCE51A	GSE	349 - 47
LCE54	GSE	349 - 48
LCE54A	GSE	349 - 49
LCE58	GSE	349 - 50
LCE58A	GSE	349 - 51
LCE60	GSE	349 - 52
LCE60A	GSE	349 - 53
LCE64	GSE	349 - 54
LCE64A	GSE	349 - 55
LCE70	GSE	349 - 56
LCE70A	GSE	349 - 57
LCE75	GSE	349 - 58
LCE75A	GSE	349 - 59
LCE80	GSE	349 - 60
LCE80A	GSE	349 - 61
LCE90	GSE	349 - 62
LCE90A	GSE	349 - 63
LCE100	GSE	349 - 64
LCE100A	GSE	349 - 65
LCE110	GSE	349 - 66
LCE110A	GSE	349 - 67
LCE120	GSE	349 - 68
LCE120A	GSE	349 - 69
LCE130	GSE	349 - 70
LCE130A	GSE	349 - 71
LCE150	GSE	349 - 72
LCE150A	GSE	349 - 73
LCE160	GSE	349 - 74
LCE160A	GSE	349 - 75
LCE170	GSE	349 - 76
LCE170A	GSE	349 - 77
LD2A	FERB	232 - 33
LD2RA	FERB	232 - 34
LD4A	FERB	232 - 35
LD4RA	FERB	232 - 36
LD107	CODI	435 - 44
LD107A	CODI	435 - 45
LD107B	CODI	435 - 46
LD3029	♦CODI	435 - 47
LD3029A	♦CODI	435 - 48
LD3029B	♦CODI	435 - 49
LFD8	♦EDI	425 -217
LFD10	♦EDI	427 - 19
LHC5-8	EDI	425 -214
LHC5-10	EDI	427 - 8
LHC5-12	EDI	428 - 31
LHC5-15	EDI	429 - 9
LHC5-20	EDI	430 -101

Δ-Registered with JEDEC by this manufacturer

♦-Mfr's data sheet available in microfilm service

1. TYPE No. CROSS INDEX

IN TYPE NUMBER SEQUENCE

TYPE No.	MFRS	Pg&Line
LHC5-25	EDI	431 - 82
LHC5-30	EDI	432 - 21
LHC5-35	EDI	432 -116
LHC5-40	EDI	432 -156
LHC10-8	EDI	425 -218
LHC10-10	EDI	427 - 20
LHC10-12	EDI	428 - 39
LHC10-15	EDI	429 - 22
LHC10-20	EDI	430 -112
LHC10-25	EDI	431 - 88
LHC10-30	EDI	432 - 31
LHC10-35	EDI	432 -117
LHC10-40	EDI	432 -161
LHC25-8	EDI	426 - 8
LHC25-10	EDI	427 - 37
LHC25-12	EDI	428 - 56
LHC25-15	EDI	429 - 30
LHC25-20	EDI	430 -123
LHC25-25	EDI	431 - 95
LHC25-30	EDI	432 - 38
LHC25-35	EDI	432 -119
LHC25-40	EDI	432 -166
LK1	♦EDI	401 - 18
LK2	♦EDI	414 -188
LK3	♦EDI	419 - 66
LK4	♦EDI	421 -150
LK5	♦EDI	423 - 93
LK6	♦EDI	424 -146
LL101A	♦ITTG	231 - 34
LL101B	♦ITTG	231 - 33
LL101C	♦ITTG	231 - 32
LL103A	♦ITTG	231 -138
LL103B	♦ITTG	231 -139
LL103C	♦ITTG	231 -140
LL104A	♦ITTG	374 - 14
LL104B	♦ITTG	374 - 11
LL104C	♦ITTG	374 - 15
LL104D	♦ITTG	374 - 12
LL104E	♦ITTG	374 - 16
LL104F	♦ITTG	374 - 13
LL4148	♦ALGG	250 -119
	♦ITTG	
LL4149	♦ITTG	247 - 39
LL4150	♦ALGG	245 -181
	♦ITTG	
LL4151	♦ALGG	246 - 82
	♦ITTG	
LL4152	♦ITTG	245 - 68
LL4153	♦ITTG	246 - 83
LL4154	♦ALGG	245 - 31
	♦ITTG	
LL4446	♦ITTG	247 - 40
LL4447	♦ITTG	247 - 41
LL4448	♦ALGG	247 - 56
	♦ITTG	
LL4449	♦ITTG	247 - 42
LL4450	♦ITTG	245 - 90
LL4451	♦ITTG	245 -105
LL4453	♦ITTG	238 - 46
LL4454	♦ITTG	246 -130
LL5245	♦ITTG	195 - 17
LL5245A	♦ITTG	195 - 9
LL5245B	♦ITTG	195 - 10
LL5256	ITTG	206 -195
LM136AH	♦NSC	164 - 83
LM136H	♦NSC	164 - 85
LM236AH	♦NSC	164 - 84
LM236H	♦NSC	164 - 86
LM336BH	♦NSC	164 - 87
LM336BZ	♦NSC	164 - 88
LM336H	♦NSC	164 - 89
LM336Z	♦NSC	164 - 90
LMZ3.3	GSE	166 -101
	♦SCN	
LMZ3.3A	♦GSE	166 - 99
	♦SCN	
LMZ3.6	GSE	167 - 71
	♦SCN	
LMZ3.6A	♦GSE	167 - 68
	♦SCN	
LMZ3.9	GSE	168 - 56
	♦SCN	
LMZ3.9A	♦GSE	168 - 53
	♦SCN	
LMZ4.3	GSE	169 - 76
	♦SCN	
LMZ4.3A	♦GSE	169 - 73
	♦SCN	
LMZ4.7	GSE	170 -133
	♦SCN	
LMZ4.7A	♦GSE	170 -130
	♦SCN	
LMZ5.1	GSE	172 - 6
	♦SCN	
LMZ5.1A	♦GSE	172 - 3
	♦SCN	
LMZ5.6	GSE	173 -104
	♦SCN	
LMZ5.6A	♦GSE	173 -101
	♦SCN	
LMZ6.2	GSE	175 -169
	♦SCN	
LMZ6.2A	♦GSE	175 -166
	♦SCN	
LMZ6.8	GSE	178 -175
	♦SCN	
LMZ6.8A	♦GSE	178 -171
	♦SCN	
LMZ7.5	GSE	180 -167
	♦SCN	
LMZ7.5A	♦GSE	180 -163
	♦SCN	
LMZ8.2	GSE	182 -156
	♦SCN	
LMZ8.2A	♦GSE	182 -152
	♦SCN	
LMZ9.1	GSE	185 -191
	♦SCN	
LMZ9.1A	♦GSE	185 -187
	♦SCN	
LMZ10	GSE	188 - 55
	♦SCN	
LMZ10A	♦GSE	188 - 51
	♦SCN	
LMZ11	GSE	189 -168
	♦SCN	
LMZ11A	♦GSE	189 -164
	♦SCN	
LMZ12	GSE	191 -143
	♦SCN	
LMZ12A	♦GSE	191 -139
	♦SCN	
LMZ13	GSE	193 - 85
	♦SCN	
LMZ13A	♦GSE	193 - 81
	♦SCN	
LMZ14	GSE	194 - 29
	♦SCN	
LMZ14A	♦GSE	194 - 25
	♦SCN	
LMZ15	GSE	195 -140
	♦SCN	
LMZ15A	♦GSE	195 -136
	♦SCN	
LMZ16	GSE	197 - 20
	♦SCN	
LMZ16A	♦GSE	197 - 18
	♦SCN	
LMZ18	GSE	199 - 38
	♦SCN	
LMZ18A	♦GSE	199 - 34
	♦SCN	
LMZ20	GSE	201 - 31
	♦SCN	
LMZ20A	♦GSE	201 - 27
	♦SCN	
LMZ22	GSE	202 -138
	♦SCN	
LMZ22A	♦GSE	202 -134
	♦SCN	
LMZ24	GSE	204 - 24
	♦SCN	
LMZ24A	♦GSE	204 - 20
	♦SCN	
LMZ27	GSE	205 -178
	♦SCN	
LMZ27A	♦GSE	205 -174
	♦SCN	
LMZ30	GSE	207 -102
	♦SCN	
LMZ30A	♦GSE	207 - 98
	♦SCN	
LMZ33	GSE	208 -195
	♦SCN	
LMZ33A	♦GSE	208 -191
	♦SCN	
LMZ36	GSE	210 - 44
	♦SCN	
LMZ36A	♦GSE	210 - 40
	♦SCN	
LMZ39	GSE	211 - 81
	♦SCN	
LMZ39A	♦GSE	211 - 77
	♦SCN	
LMZ43	GSE	212 - 92
	♦SCN	
LMZ43A	♦GSE	212 - 88
	♦SCN	
LMZ47	GSE	213 -109
	♦SCN	
LMZ47A	♦GSE	213 -105
	♦SCN	
LMZ51	GSE	214 -104
	♦SCN	
LMZ51A	♦GSE	214 -100
	♦SCN	
LMZ56	GSE	215 - 93
	♦SCN	
LMZ56A	♦GSE	215 - 89
	♦SCN	
LMZ62	GSE	216 - 97
	♦SCN	
LMZ62A	♦GSE	216 - 93
	♦SCN	
LMZ68	GSE	217 - 78
	♦SCN	
LMZ68A	♦GSE	217 - 74
	♦SCN	
LMZ75	GSE	218 - 61
	♦SCN	
LMZ75A	♦GSE	218 - 57
	♦SCN	
LMZ82	GSE	219 - 37
	♦SCN	
LMZ82A	♦GSE	219 - 33
	♦SCN	
LMZ91	GSE	220 - 16
	♦SCN	
LMZ91A	♦GSE	220 - 12
	♦SCN	
LMZ100	GSE	220 -178
	♦SCN	
LMZ100A	♦GSE	220 -174
	♦SCN	
LMZ110	GSE	221 -138
	♦SCN	
LMZ110A	♦GSE	221 -134
	♦SCN	
LMZ120	GSE	222 - 92
	♦SCN	
LMZ120A	♦GSE	222 - 88
	♦SCN	
LMZ130	GSE	223 - 43
	♦SCN	
LMZ130A	♦GSE	223 - 39
	♦SCN	
LMZ150	GSE	224 - 77
	♦SCN	
LMZ150A	♦GSE	224 - 73
	♦SCN	
LMZ160	GSE	225 - 16
	♦SCN	
LMZ160A	♦GSE	225 - 12
	♦SCN	
LMZ180	GSE	226 - 38
	♦SCN	
LMZ180A	♦GSE	226 - 34
	♦SCN	
LMZ200	GSE	227 - 31
	♦SCN	
LMZ200A	♦GSE	227 - 27
	♦SCN	
LNA328	♦CODI	165 - 32
LNA328A	♦CODI	165 - 31
LNA328B	♦CODI	165 - 29
LNA331	♦CODI	165 -156
LNA331A	♦CODI	165 -155
LNA331B	♦CODI	165 -153
LNA335	♦CODI	166 -138
LNA335A	♦CODI	166 -137
LNA335B	♦CODI	166 -135
LNA339	♦CODI	167 -208
LNA339A	♦CODI	167 -207
LNA339B	♦CODI	167 -205
LNA343	♦CODI	169 - 24
LNA343A	♦CODI	169 - 21
LNA343B	♦CODI	169 - 19
LNA347	♦CODI	170 - 72
LNA347A	♦CODI	170 - 70
LNA347B	♦CODI	170 - 67
LNA351	♦CODI	171 -152
LNA351A	♦CODI	171 -150
LNA351B	♦CODI	171 -147
LNA356	♦CODI	173 - 32
LNA356A	♦CODI	173 - 30
LNA356B	♦CODI	173 - 27
LNA362	♦CODI	175 - 96
LNA362A	♦CODI	175 - 94
LNA362B	♦CODI	175 - 91
LNA368	♦CODI	178 - 68
LNA368A	♦CODI	178 - 66
LNA368B	♦CODI	178 - 62
LNA375	♦CODI	180 - 64
LNA375A	♦CODI	180 - 62
LNA375B	♦CODI	180 - 58
LNA382	♦CODI	182 - 46
LNA382A	♦CODI	182 - 44
LNA382B	♦CODI	182 - 40
LNA391	♦CODI	185 - 82
LNA391A	♦CODI	185 - 80
LNA391B	♦CODI	185 - 76
LNA3100	♦CODI	187 -130
LNA3100A	CODI	187 -128
LNA3100B	CODI	187 -124
LVA43A	♦KSI	169 - 22
♦TRWO	♦TRWS	
LVA43B	TRWS	168 -153
LVA43C	TRWS	168 -145
LVA47A	♦KSI	170 - 7
♦TRWO	♦TRWS	
LVA47B	TRWS	169 -191
LVA47C	TRWS	169 -183
LVA51A	♦KSI	171 - 89
♦TRWO	♦TRWS	
LVA51B	TRWS	171 - 67
LVA51C	TRWS	171 - 59
LVA56A	♦KSI	172 -177
♦TRWO	♦TRWS	
LVA56B	TRWS	172 -149
LVA56C	TRWS	172 -139
LVA62A	♦KSI	174 -206
♦TRWO	♦TRWS	
LVA62B	TRWS	174 -162
LVA62C	TRWS	174 -152
LVA68A	♦KSI	177 -215
♦TRWO	♦TRWS	
LVA68B	TRWS	177 -187
LVA68C	TRWS	177 -177
LVA75A	♦KSI	179 -201
♦TRWO	♦TRWS	
LVA75B	TRWS	179 -177
LVA75C	TRWS	179 -170
LVA82A	♦KSI	181 -180
♦TRWO	♦TRWS	
LVA82B	TRWS	181 -158
LVA82C	TRWS	181 -151
LVA91A	♦KSI	185 - 12
♦TRWO	♦TRWS	
LVA91B	TRWS	184 -207
LVA91C	TRWS	184 -198
LVA100A	♦KSI	187 - 55
	♦TRWS	
LVA100B	TRWS	187 - 31
LVA100C	TRWS	187 - 23
LVA150	♦TRWS	171 - 4
LVA150A	TRWS	171 - 1
LVA150B	TRWS	170 -207
LVA150C	TRWS	170 -204
LVA153	♦TRWS	172 - 51
LVA153A	TRWS	172 - 46
LVA153B	TRWS	172 - 42
LVA153C	TRWS	172 - 39
LVA156	♦TRWS	172 -185
LVA156A	TRWS	172 -154
LVA156B	TRWS	172 -150
LVA156C	TRWS	172 -140
LVA159	♦TRWS	173 -182
LVA159A	TRWS	173 -177
LVA159B	TRWS	173 -174
LVA159C	TRWS	173 -171
LVA162	♦TRWS	175 - 37
LVA162A	TRWS	174 -166
LVA162B	TRWS	174 -163
LVA162C	TRWS	174 -153
LVA165	♦TRWS	177 - 35
LVA165A	TRWS	177 - 3
LVA165B	TRWS	176 -213
LVA165C	TRWS	176 -210
LVA168	♦TRWS	178 - 6
LVA168A	TRWS	177 -191
LVA168B	TRWS	177 -188
LVA168C	TRWS	177 -178
LVA171	♦TRWS	179 - 57
LVA171A	TRWS	179 - 53
LVA171B	TRWS	179 - 50
LVA171C	TRWS	179 - 47
LVA174	♦TRWS	179 -110
LVA174A	TRWS	179 -106
LVA174B	TRWS	179 -101
LVA174C	TRWS	179 - 98
LVA177	♦TRWS	181 - 24
LVA177A	TRWS	181 - 20
LVA177B	TRWS	181 - 15
LVA177C	TRWS	181 - 12
LVA180	♦TRWS	181 - 78
LVA180A	TRWS	181 - 73
LVA180B	TRWS	181 - 70
LVA180C	TRWS	181 - 67
LVA183	♦TRWS	182 -208
LVA183A	TRWS	182 -200
LVA183B	TRWS	182 -201
LVA183C	TRWS	182 -195
LVA186	♦TRWS	183 -123
LVA186A	TRWS	183 -119
LVA186B	TRWS	183 -114
LVA186C	TRWS	183 -115
LVA189	♦TRWS	184 - 6
LVA189A	TRWS	184 - 2
LVA189B	TRWS	183 -213
LVA189C	TRWS	183 -214
LVA192	♦TRWS	186 - 35
LVA192A	TRWS	186 - 31
LVA192B	TRWS	186 - 26
LVA192C	TRWS	186 - 27
LVA195	♦TRWS	186 -107
LVA195A	TRWS	186 -103
LVA195B	TRWS	186 - 96
LVA195C	TRWS	186 - 97
LVA198	♦TRWS	186 -149
LVA198A	TRWS	186 -145
LVA198B	TRWS	186 -140
LVA198C	TRWS	186 -141
LVA343A	♦TRWS	169 - 23
LVA343B	TRWS	168 -154
LVA343C	TRWS	168 -146
LVA347A	♦TRWO	170 - 71
	♦TRWS	
LVA347B	TRWS	170 - 68
LVA347C	TRWS	170 - 66
LVA351A	♦TRWO	171 -151
	♦TRWS	
LVA351B	TRWS	171 -148
LVA351C	TRWS	171 -146
LVA356A	♦TRWO	173 - 31
	♦TRWS	
LVA356B	TRWS	173 - 28
LVA356C	TRWS	173 - 26
LVA362A	♦TRWO	175 - 95
	♦TRWS	
LVA362B	TRWS	175 - 92
LVA362C	TRWS	175 - 90
LVA368A	♦TRWO	178 - 67
	♦TRWS	
LVA368B	TRWS	178 - 63
LVA368C	TRWS	178 - 61
LVA375A	♦TRWO	180 - 63
	♦TRWS	
LVA375B	TRWS	180 - 59
LVA375C	TRWS	180 - 57
LVA382A	♦TRWO	182 - 45
	♦TRWS	
LVA382B	TRWS	182 - 41
LVA382C	TRWS	182 - 39
LVA391A	♦TRWO	185 - 81
	♦TRWS	
LVA391B	TRWS	185 - 77
LVA391C	TRWS	185 - 75
LVA450	♦KSI	171 - 5
LVA450A	♦TRWO	171 - 12
	♦TRWS	
LVA450B	♦TRWS	171 - 11
LVA450C	♦TRWS	170 -205
LVA453	♦KSI	172 - 52
LVA453A	♦TRWO	172 - 47
	♦TRWS	
LVA453B	♦TRWS	172 - 43
LVA453C	♦TRWS	172 - 40
LVA456	♦KSI	172 -186
LVA456A	♦TRWO	172 -155
	♦TRWS	
LVA456B	♦TRWS	172 -151
LVA456C	♦TRWS	172 -141
LVA459	♦KSI	173 -183
LVA459A	♦TRWO	173 -178
	♦TRWS	
LVA459B	♦TRWS	173 -175
LVA459C	♦TRWS	173 -172
LVA462	♦KSI	175 - 38
LVA462A	♦TRWO	174 -167
	♦TRWS	
LVA462B	♦TRWS	174 -164
LVA462C	♦TRWS	174 -154
LVA465	♦KSI	177 - 36
LVA465A	♦TRWO	177 - 4
	♦TRWS	
LVA465B	♦TRWS	176 -214
LVA465C	♦TRWS	176 -211
LVA468	♦KSI	178 - 7
LVA468A	♦TRWO	177 -192
	♦TRWS	
LVA468B	♦TRWS	177 -189
LVA468C	♦TRWS	177 -179
LVA471	♦KSI	179 - 58
LVA471A	♦TRWO	179 - 54
	♦TRWS	
LVA471B	♦TRWS	179 - 51
LVA471C	♦TRWS	179 - 48
LVA474	♦KSI	179 -111
LVA474A	♦TRWO	179 -107
	♦TRWS	
LVA474B	♦TRWS	179 -102
LVA474C	♦TRWS	179 - 99
LVA477	♦KSI	181 - 25
LVA477A	♦TRWO	181 - 21
	♦TRWS	
LVA477B	♦TRWS	181 - 16
LVA477C	♦TRWS	181 - 13
LVA480	♦KSI	181 - 79
LVA480A	♦TRWO	181 - 74
	♦TRWS	
LVA480B	♦TRWS	181 - 71
LVA480C	♦TRWS	181 - 68
LVA483	♦KSI	182 -209
LVA483A	♦TRWO	182 -202
	♦TRWS	
LVA483B	♦TRWS	182 -203
LVA483C	♦TRWS	182 -196
LVA486	♦KSI	183 -124
LVA486A	♦TRWO	183 -120
	♦TRWS	
LVA486B	♦TRWS	183 -116
LVA486C	♦TRWS	183 -117
LVA489	♦KSI	184 - 7
LVA489A	♦TRWO	184 - 3
	♦TRWS	
LVA489B	♦TRWS	183 -215
LVA489C	♦TRWS	183 -216
LVA492	♦KSI	186 - 36
LVA492A	♦TRWO	186 - 32
	♦TRWS	
LVA492B	♦TRWS	186 - 28
LVA492C	♦TRWS	186 - 29
LVA495	♦KSI	186 -108
LVA495A	♦TRWO	186 -104
	♦TRWS	
LVA495B	♦TRWS	186 - 98
LVA495C	♦TRWS	186 - 99
LVA498	♦KSI	186 -150
LVA498A	♦TRWO	186 -146
	♦TRWS	
LVA498B	♦TRWS	186 -142
LVA498C	♦TRWS	186 -143
LVA1043A	♦TRWS	169 - 45
LVA1043B	TRWS	169 - 35
LVA1043C	TRWS	169 - 33
LVA1047A	♦TRWS	170 - 98
LVA1047B	TRWS	170 - 86
LVA1047C	TRWS	170 - 84
LVA1051A	♦TRWS	171 -179
LVA1051B	TRWS	171 -168
LVA1051C	TRWS	171 -166
LVA1056A	♦TRWS	173 - 64
LVA1056B	TRWS	173 - 51
LVA1056C	TRWS	173 - 49
LVA1062A	♦TRWS	175 -127
LVA1062B	TRWS	175 -113
LVA1062C	TRWS	175 -111
LVA1068A	♦TRWS	178 -110
LVA1068B	TRWS	178 - 91
LVA1068C	TRWS	178 - 89
LVA1075A	♦TRWS	180 -104
LVA1075B	TRWS	180 - 85
LVA1075C	TRWS	180 - 83
LVA1082A	♦TRWS	182 - 87
LVA1082B	TRWS	182 - 68
LVA1082C	TRWS	182 - 66
LVA1091A	♦TRWS	185 -119
LVA1091B	TRWS	185 -102
LVA1091C	TRWS	185 -100
LVA3100A	♦TRWO	187 -129
	♦TRWS	
LVA3100B	TRWS	187 -125
LVA3100C	TRWS	187 -123
LVA10100A	♦TRWS	187 -178
LVA10100B	TRWS	187 -158
LVA10100C	TRWS	220 -101
M1A1	EDL	283 - 79
M1A5	EDL	283 - 80
M1A9	EDL	283 - 81
M1B1	EDL	283 -128
M1B5	EDL	283 -129
M1B9	EDL	283 -130
M1C1	EDL	283 -192
M1C5	EDL	283 -193
M1C9	EDL	283 -194
M1D1	EDL	284 - 39
M1D5	EDL	284 - 40
M1D9	EDL	284 - 41
M1E1	EDL	284 - 80
M1E5	EDL	284 - 81

Δ-Registered with JEDEC by this manufacturer

♦-Mfr's data sheet available in microfilm service

1. TYPE No. CROSS INDEX

IN TYPE NUMBER SEQUENCE

TYPE No.	MFRS	Pg&Line
M1E9	EDL	284 - 82
M1F1	EDL	284 -144
M1F5	EDL	284 -145
M1F9	EDL	284 -146
M1G1	EDL	284 -182
M1G5	EDL	284 -183
M1G9	EDL	284 -184
M1H1	EDL	285 - 23
M1H5	EDL	285 - 24
M1H9	EDL	285 - 25
M1K1	EDL	285 - 44
M1K5	EDL	285 - 45
M1K9	EDL	285 - 46
M1M1	EDL	402 - 46
M1M5	EDL	402 - 47
M1M9	EDL	402 - 48
M2-100	♦AEIL	287 - 14
M2-100R	♦AEIL	287 - 15
M2-200	♦AEIL	287 - 34
M2-200R	♦AEIL	287 - 35
M2-400	♦AEIL	287 - 62
M2-400R	♦AEIL	287 - 63
M2-600	♦AEIL	287 - 91
M2-600R	♦AEIL	287 - 92
M2-800	♦AEIL	287 -117
M2-800R	♦AEIL	287 -118
M2-1000	♦AEIL	402 -136
M2-1000R	♦AEIL	402 -137
M2-1200	♦AEIL	406 -108
M2-1200R	♦AEIL	406 -109
M2A1	EDL	285 -200
M2A5	EDL	285 -201
M2A9	EDL	285 -202
M2B1	EDL	286 - 11
M2B5	EDL	286 - 12
M2B9	EDL	286 - 13
M2C1	EDL	286 - 51
M2C5	EDL	286 - 52
M2C9	EDL	286 - 53
M2D1	EDL	286 - 84
M2D5	EDL	286 - 85
M2D9	EDL	286 - 86
M2E1	EDL	286 -101
M2E5	EDL	286 -102
M2E9	EDL	286 -103
M2F1	EDL	286 -132
M2F5	EDL	286 -133
M2F9	EDL	286 -134
M2G1	EDL	286 -150
M2G5	EDL	286 -151
M2G9	EDL	286 -152
M2H1	EDL	286 -178
M2H5	EDL	286 -179
M2H9	EDL	286 -180
M2K1	EDL	286 -191
M2K5	EDL	286 -192
M2K9	EDL	286 -193
M2M1	EDL	402 -101
M2M5	EDL	402 -102
M2M9	EDL	402 -103
M2.5A	MAL	402 -131
M3A1	EDL	286 -217
M3A5	EDL	286 -218
M3A9	EDL	286 -219
M3B1	EDL	287 - 11
M3B5	EDL	287 - 12
M3B9	EDL	287 - 13
M3C1	EDL	287 - 31
M3C5	EDL	287 - 32
M3C9	EDL	287 - 33
M3D1	EDL	287 - 49
M3D5	EDL	287 - 50
M3D9	EDL	287 - 51
M3E1	EDL	287 - 59
M3E5	EDL	287 - 60
M3E9	EDL	287 - 61
M3F1	EDL	287 - 76
M3F5	EDL	287 - 77
M3F9	EDL	287 - 78
M3G1	EDL	287 - 88
M3G5	EDL	287 - 89
M3G9	EDL	287 - 90
M3H1	EDL	287 -103
M3H5	EDL	287 -104
M3H9	EDL	287 -105
M3K1	EDL	287 -114
M3K5	EDL	287 -115
M3K9	EDL	287 -116
M3M1	EDL	402 -132
M3M5	EDL	402 -133
M3M9	EDL	402 -134
M4A1	EDL	287 -168
M4A5	EDL	287 -169
M4A9	EDL	287 -170
M4B1	EDL	288 - 4
M4B5	EDL	288 - 5
M4B9	EDL	288 - 6
M4B32	♦HITJ	364 -103
M4B52	♦HITJ	365 -166
M4C1	EDL	288 - 76
M4C1#B	♦HITJ	361 - 94
M4C5	EDL	288 - 77
M4C6	♦HITJ	366 - 93
M4C9	EDL	288 - 78
M4C32	♦HITJ	364 -113
M4C52	♦HITJ	365 -177
M4D1	EDL	288 -144
M4D5	EDL	288 -145
M4D9	EDL	288 -146
M4E1	EDL	288 -176
M4E1#B	♦HITJ	361 -106
M4E5	EDL	288 -177
M4E6	♦HITJ	366 -122
M4E9	EDL	288 -178

TYPE No.	MFRS	Pg&Line
M4E32	♦HITJ	364 -130
M4E52	♦HITJ	365 -189
M4F1	EDL	289 - 16
M4F5	EDL	289 - 17
M4F9	EDL	289 - 18
M4G1	EDL	289 - 41
M4G1#B	♦HITJ	361 -111
M4G5	EDL	289 - 42
M4G6	♦HITJ	366 -150
M4G9	EDL	289 - 43
M4H1	EDL	289 - 98
M4H5	EDL	289 - 99
M4H9	EDL	289 -100
M4K1	EDL	289 -116
M4K5	EDL	289 -117
M4K9	EDL	289 -118
M4M1	EDL	402 -156
M4M5	EDL	402 -157
M4M9	EDL	402 -158
M5A5	EDL	290 -118
M5B5	EDL	290 -143
M5C5	EDL	290 -179
M5D5	EDL	290 -205
M5E5	EDL	291 - 10
M5F5	EDL	291 - 34
M5G5	EDL	291 - 49
M5H5	EDL	291 - 60
M5K5	EDL	291 - 72
M5M5	EDL	402 -208
M5N5	EDL	406 -140
M5P5	EDL	411 -115
M6-100	♦AEIL	291 -168
M6-100R	♦AEIL	291 -169
M6-200	♦AEIL	291 -218
M6-200R	♦AEIL	291 -219
M6-400	♦AEIL	292 - 66
M6-400R	♦AEIL	292 - 67
M6-600	♦AEIL	292 -125
M6-600R	♦AEIL	292 -127
M6-800	♦AEIL	292 -176
M6-800R	♦AEIL	292 -177
M6-1000	♦AEIL	403 - 22
M6-1000R	♦AEIL	403 - 23
M6-1200	♦AEIL	406 -150
M6-1200R	♦AEIL	406 -152
M7A5	EDL	291 -109
M7B5	EDL	291 -152
M7C5	EDL	291 -203
M7D5	EDL	292 - 20
M7E5	EDL	292 - 51
M7F5	EDL	292 - 84
M7G5	EDL	292 -109
M7H5	EDL	292 -142
M7K5	EDL	292 -160
M7M5	EDL	403 - 7
M7N5	EDL	406 -145
M7P5	EDL	411 -120
M15F	♦VMI	410 -209
M15FG	♦VMI	248 - 36
M15K	♦THEF	411 - 16
M15S	♦VMI	410 -210
M15SG	♦VMI	248 - 37
M15UF	♦VMI	410 -211
M15UFG	♦VMI	248 - 34
M16-100	♦AEIL	296 -196
M16-100R	♦AEIL	296 -200
M16-200	♦AEIL	296 -212
M16-200R	♦AEIL	296 -215
M16-400	♦AEIL	297 - 10
M16-400R	♦AEIL	297 - 12
M16-600	♦AEIL	297 - 24
M16-600R	♦AEIL	297 - 26
M16-800	♦AEIL	297 - 39
M16-800R	♦AEIL	297 - 41
M16-1000	♦AEIL	403 - 97
M16-1000R	♦AEIL	403 - 99
M16-1200	♦AEIL	406 -186
M16-1200R	♦AEIL	406 -188
M20	♦SET	249 -183
M20F	♦VMI	414 -196
M20FG	♦VMI	248 - 42
M20K	♦THEF	415 - 1
M20S	♦VMI	414 -197
M20SG	♦VMI	248 - 43
M20UF	♦VMI	414 -198
M20UFG	♦VMI	248 - 40
M25-100	♦AEIL	298 -146
M25-100R	♦AEIL	298 -147
M25-200	♦AEIL	298 -202
M25-200R	♦AEIL	298 -203
M25-400	♦AEIL	299 - 58
M25-400R	♦AEIL	299 - 59
M25-600	♦AEIL	299 -122
M25-600R	♦AEIL	299 -123
M25-800	♦AEIL	299 -163
M25-800R	♦AEIL	299 -164
M25-1000	♦AEIL	403 -138
M25-1000R	♦AEIL	403 -139
M25-1200	♦AEIL	406 -216
M25-1200R	♦AEIL	406 -217
M25F	♦VMI	417 -107
M25FG	♦VMI	248 - 48
M25S	♦VMI	417 -108
M25SG	♦VMI	248 - 49
M25UF	♦VMI	417 -109
M25UFG	♦VMI	248 - 46
M30	♦SET	419 -142
M30F	♦VMI	419 - 53
M30FG	♦VMI	248 - 54
M30K	♦THEF	419 - 91
M30S	♦VMI	419 - 54
M30SG	♦VMI	248 - 55
M30UF	♦VMI	419 - 55
M30UFG	♦VMI	248 - 52

TYPE No.	MFRS	Pg&Line
M40F	♦VMI	421 -137
M40FG	♦VMI	248 - 59
M40K	♦THEF	421 -177
M40S	♦VMI	421 -138
M40SG	♦VMI	248 - 60
M40UF	♦VMI	421 -139
M40UFG	♦VMI	248 - 57
M41-100	♦AEIL	301 -115
M41-100R	♦AEIL	303 -214
M41-200	♦AEIL	301 -139
M41-200R	♦AEIL	303 -215
M41-400	♦AEIL	301 -184
M41-400R	♦AEIL	303 -216
M41-600	♦AEIL	301 -219
M41-600R	♦AEIL	303 -217
M41-800	♦AEIL	302 - 30
M41-800R	♦AEIL	303 -218
M41-1000	♦AEIL	403 -183
M41-1000R	♦AEIL	404 - 2
M41-1200	♦AEIL	407 - 35
M41-1200R	♦AEIL	407 - 74
M50A	♦SET	250 - 10
M50F	♦VMI	423 - 82
M50FG	♦VMI	248 - 65
M50K	♦THEF	423 -126
M50S	♦VMI	423 - 83
M50SG	♦VMI	248 - 66
M50UF	♦VMI	423 - 84
M50UFG	♦VMI	248 - 63
M60A	♦SET	424 -212
M60F	♦VMI	424 -128
M60FG	♦VMI	248 - 71
M60K	♦THEF	424 -178
M60S	♦VMI	424 -129
M60SG	♦VMI	248 - 72
M60UF	♦VMI	424 -130
M60UFG	♦VMI	248 - 69
M67	♦SOD	277 -215
M67A	♦SOD	274 -192
M67B	♦SOD	275 -158
M67C	♦SOD	276 -138
M68	♦SOD	278 - 28
M68A	♦SOD	274 -198
M68B	♦SOD	275 -163
M68C	♦SOD	276 -154
M69	♦SOD	278 - 69
M69A	♦SOD	274 -206
M69B	♦SOD	275 -169
M69C	♦SOD	276 -179
M70	♦SOD	278 -150
M70A	♦SOD	274 -218
M70B	♦SOD	275 -178
M70C	♦SOD	276 -218
M71	♦SOD	279 - 2
M71-100	♦AEIL	304 - 37
M71-100R	♦AEIL	304 - 38
M71-200	♦AEIL	304 - 69
M71-200R	♦AEIL	304 - 70
M71-400	♦AEIL	304 -115
M71-400R	♦AEIL	304 -116
M71-600	♦AEIL	304 -152
M71-600R	♦AEIL	304 -153
M71-800	♦AEIL	304 -184
M71-800R	♦AEIL	304 -185
M71-1000	♦AEIL	404 - 12
M71-1000R	♦AEIL	404 - 13
M71-1200	♦AEIL	407 - 89
M71-1200R	♦AEIL	407 - 90
M71A	♦SOD	275 - 9
M71B	♦SOD	275 -188
M71C	♦SOD	277 - 40
M72	SOD	279 - 47
M72A	♦SOD	275 - 17
M72B	♦SOD	275 -193
M72C	♦SOD	277 - 62
M72D	♦SOD	277 - 68
M73	♦SOD	401 -124
M73A	♦SOD	401 - 38
M73B	♦SOD	401 - 64
M73C	♦SOD	401 - 91
M80F	♦VMI	426 - 9
M80FG	♦VMI	248 - 77
M80K	♦THEF	426 - 46
M80S	♦VMI	426 - 10
M80SG	♦VMI	248 - 78
M80UF	♦VMI	426 - 11
M80UFG	♦VMI	248 - 75
M100F	♦VMI	281 - 28
M100FG	♦VMI	248 - 83
M100K#B	♦THEF	427 - 80
M100S	♦VMI	427 - 39
M100SG	♦VMI	248 - 84
M100UF	♦VMI	427 - 40
M100UFG	♦VMI	248 - 81
M120K	♦THEF	428 - 89
M150K	♦THEF	429 - 65
M151-100	♦AEIL	307 - 60
M151-100R	♦AEIL	307 - 66
M151-200	♦AEIL	307 - 90
M151-200R	♦AEIL	307 -104
M151-400	♦AEIL	307 -155
M151-400R	♦AEIL	307 -170
M151-600	♦AEIL	307 -202
M151-600R	♦AEIL	307 -215
M151-800	♦AEIL	308 - 26
M151-800R	♦AEIL	308 - 40
M151-1000	♦AEIL	404 - 92
M151-1000R	♦AEIL	404 -103
M151-1200	♦AEIL	407 -184
M151-1200R	♦AEIL	407 -195
M200K	♦THEF	430 -155
M300K	♦THEF	432 - 59
M500	♦SOD	278 -185
M500A	♦SOD	275 - 2

TYPE No.	MFRS	Pg&Line
M500B	♦SOD	275 -182
M500C	♦SOD	277 - 25
M1200	♦SOD	406 - 26
M8513A-0	IMTM	442 - 98
M8513A-R	IMTM	442 - 99
	TOSJ	
M19500/469-01		367 -180
	♦GICB	
M19500/469-02		367 -220
	♦GICB	
M19500/469-03		368 - 38
	♦GICB	
M19500/469-04		368 - 69
	♦GICB	
MA27	MATJ	442 - 60
MA27Q	MATJ	442 - 61
MA27T	MATJ	442 - 62
MA27W	MATJ	442 - 63
MA28	MATJ	442 - 64
MA28T	MATJ	442 - 65
MA28W	MATJ	442 - 66
MA30#B	♦UNI	248 -170
MA56	MATJ	238 - 35
MA57	MATJ	238 - 47
MA72	MATJ	238 - 48
MA150	MATJ	262 - 87
MA151A	MATJ	245 -115
MA151K	MATJ	245 -106
MA151WA	MATJ	245 -116
MA151WK	MATJ	245 -107
MA152A	MATJ	246 -191
MA152K	MATJ	246 -186
MA152WA	MATJ	265 - 53
MA152WK	MATJ	246 -187
MA153	MATJ	271 - 70
MA153A	MATJ	271 - 75
MA154WA	MATJ	271 -102
MA154WK	MATJ	271 - 97
MA155WA	MATJ	271 -116
MA155WK	MATJ	271 -111
MA156	MATJ	271 - 71
MA157	MATJ	271 - 98
MA157A	MATJ	271 -112
MA159	MATJ	271 - 99
MA159A	MATJ	271 -113
MA160	MATJ	271 -100
MA160A	MATJ	271 -114
MA161	MATJ	262 - 88
MA162	MATJ	262 - 92
MA165	MATJ	245 - 53
MA166	MATJ	245 -182
MA167	MATJ	246 -131
MA170	MATJ	245 -110
MA171	MATJ	246 -190
MA175WA	MATJ	271 -103
MA175WK	MATJ	271 -101
MA176WA	MATJ	271 -117
MA176WK	MATJ	271 -115
MA181	MATJ	275 - 63
MA182	MATJ	275 - 75
MA183	MATJ	275 - 82
MA190	MATJ	245 - 58
MA221	MATJ	245 - 54
MA291	MATJ	275 - 93
MA412	MIC	444 - 54
MA428	MIC	444 - 55
MA439	MIC	438 -106
MA522	MATJ	445 - 58
MA700	MATJ	436 -109
MA701	MATJ	436 -110
MA856	MATJ	238 - 49
MA858	MATJ	238 - 50
MA1030	MATJ	165 - 84
MA1033	MATJ	166 - 14
MA1036	MATJ	166 -191
MA1039	MATJ	167 -156
MA1043	MATJ	168 -174
MA1047	MATJ	170 - 8
MA1051	MATJ	171 - 90
MA1056	MATJ	172 -178
MA1062	MATJ	174 -207
MA1068	MATJ	177 -216
MA1075	MATJ	179 -202
MA1082	MATJ	181 -181
MA1091	MATJ	185 - 13
MA1100	MATJ	187 - 56
MA1110	MATJ	189 - 1
MA1120	MATJ	190 -170
MA1130	MATJ	192 -140
MA1140M	MATJ	193 -180
MA1150	MATJ	194 -164
MA1160	MATJ	196 - 68
MA1180	MATJ	198 - 73
MA1200	MATJ	200 - 71
MA1220	MATJ	201 -177
MA1240	MATJ	203 - 78
MA1270	MATJ	205 - 11
MA1300	MATJ	206 -146
MA1330	MATJ	208 - 34
MA1360	MATJ	209 -115
MA2051	MATJ	171 -163
MA2056	MATJ	173 - 46
MA2062	MATJ	175 -109
MA2068#E	MATJ	178 - 87
MA2075	MATJ	180 - 81
MA2082	MATJ	182 - 64
MA2091	MATJ	185 - 98
MA2100	MATJ	187 -151
MA2110	MATJ	189 - 72
MA2120	MATJ	191 - 35
MA2130	MATJ	192 -205
MA2150	MATJ	195 - 36
MA2160	MATJ	196 -134
MA2180	MATJ	198 -146

TYPE No.	MFRS	Pg&Line
MA2200	MATJ	200 -140
MA2220	MATJ	202 - 39
MA2240	MATJ	203 -141
MA2270	MATJ	205 - 97
MA2300	MATJ	207 - 23
MA2330	MATJ	208 -116
MA2360	MATJ	209 -180
MA3047	MATJ	169 -155
MA3051	MATJ	171 - 33
MA3056	MATJ	172 -103
MA3062	MATJ	174 - 81
MA3068L	MATJ	178 - 29
MA3075L	MATJ	180 - 28
MA3082	MATJ	181 -113
MA3091	MATJ	184 -132
MA3100	MATJ	186 -191
MA3110	MATJ	188 -158
MA3120	MATJ	190 -103
MA3130	MATJ	192 - 96
MA3150	MATJ	194 -112
MA3160	MATJ	196 - 26
MA3180	MATJ	198 - 21
MA3200	MATJ	200 - 31
MA3220	MATJ	201 -126
MA3240	MATJ	203 - 43
MA3270	MATJ	204 -178
MA3300	MATJ	206 -114
MA3330	MATJ	207 -198
MA3360	MATJ	209 - 87
MA4030	MATJ	165 - 65
MA4033	MATJ	165 -198
MA4036	MATJ	166 -168
MA4039	MATJ	167 -134
MA4043	MATJ	168 -141
MA4047	MATJ	169 -175
MA4051	MATJ	171 - 52
MA4056	MATJ	172 -132
MA4062	MATJ	174 -134
MA4068	MATJ	177 -169
MA4075	MATJ	179 -163
MA4082	MATJ	181 -144
MA4091	MATJ	184 -191
MA4100	MATJ	187 - 15
MA4110	MATJ	188 -180
MA4120	MATJ	190 -138
MA4130	MATJ	192 -115
MA4140M	MATJ	193 -170
MA4148	MIC	444 - 56
MA4150	MATJ	194 -139
MA4160	MATJ	196 - 44
MA4180	MATJ	198 - 47
MA4200	MATJ	200 - 49
MA4220	MATJ	201 -152
MA4230	♦MIC	245 - 91
MA4240	MATJ	203 - 57
MA4245	♦MIC	245 -144
MA4270	MATJ	204 -200
MA4300	MATJ	206 -126
MA4330	MATJ	208 - 12
MA4360	MATJ	209 -100
MA4374C	MIC	245 -131
MA4375C	MIC	246 -204
MA4375E	MIC	246 -205
MA5047	MATJ	170 - 39
MA5051	MATJ	171 -120
MA5056	MATJ	172 -208
MA5062	MATJ	175 - 60
MA5068	MATJ	178 - 30
MA5075	MATJ	180 - 29
MA5082	MATJ	182 - 7
MA5091	MATJ	185 - 42
MA5100	MATJ	187 - 87
MA5110	MATJ	189 - 29
MA5120	MATJ	190 -200
MA5130	MATJ	192 -166
MA5150	MATJ	194 -186
MA5160	MATJ	196 - 95
MA5180	MATJ	198 - 99
MA5200	MATJ	200 - 99
MA5220	MATJ	201 -204
MA5240	MATJ	203 -101
MA41516	♦MIC	243 -153
MB4-01	ORIJ	360 - 12
MB4-02	ORIJ	360 - 13
MB4-04	ORIJ	360 - 14
MB4-06	ORIJ	360 - 15
MB4-08	ORIJ	360 - 16
MB25-100	♦AEIL	369 -218
MB25-200	♦AEIL	370 - 29
MB25-400	♦AEIL	370 - 66
MB25-600	♦AEIL	370 - 67
MB25-800	♦AEIL	370 -122
MB25-1000	♦AEIL	370 -138
MB25-1200	♦AEIL	370 -143
MB81	♦DII	367 - 11
MB81G	♦DII	367 - 12
MB82	♦DII	367 - 28
MB82G	♦DII	367 - 29
MB84	♦DII	367 - 44
MB84G	♦DII	367 - 45
MB86	♦DII	367 - 61
MB86G	♦DII	367 - 62
MB88	♦DII	367 - 77
MB88G	♦DII	367 - 78
MB101	♦DII	367 -149
MB101G	♦DII	367 -150
MB102	♦DII	367 -187
MB102G	♦DII	367 -188
MB104	♦DII	368 - 7
MB104G	♦DII	368 - 8
MB106	♦DII	368 - 45
MB106G	♦DII	368 - 46
MB108	♦DII	368 - 74
MB108G	♦DII	368 - 75

Δ-Registered with JEDEC by this manufacturer

♦-Mfr's data sheet available in microfilm service

1. TYPE No. CROSS INDEX

IN TYPE NUMBER SEQUENCE

TYPE No.	MFRS	Pg&Line
MB151	♦DII	369 - 7
MB152	♦DII	369 - 34
MB154	♦DII	369 - 61
MB156	♦DII	369 - 86
MB158	♦DII	369 -104
MB200	♦MSC	241 - 32
MB201	♦MSC	241 - 34
MB202	♦MSC	241 - 36
MB204	♦MSC	241 - 38
MB206	♦MSC	241 - 40
MB207	♦MSC	241 - 33
MB208	♦MSC	241 - 35
MB209	♦MSC	241 - 37
MB211	♦MSC	241 - 39
MB213	♦MSC	241 - 41
MB251	♦DII	369 -219
		401 -168
MB252	♦DII	278 - 83
		370 - 30
MB254	♦DII	278 -133
		370 - 68
MB256	♦DII	278 -204
		370 -101
MB258	♦DII	278 - 13
		370 -123
MB335	MSC	257 -189
MB336	MSC	258 -115
MB337	MSC	259 -114
MB338	MSC	260 - 82
MB339	MSC	260 -131
MB340	MSC	261 - 10
MB351	♦DII	371 - 44
MB352	♦DII	371 - 63
MB354	♦DII	371 - 80
MB356	♦DII	371 - 96
MB358	♦DII	371 -111
MB366	MSC	257 -190
MB367	MSC	258 -116
MB368	MSC	259 -115
MB369	MSC	260 - 83
MB370	MSC	260 -132
MB371	MSC	261 - 11
MB805	♦DII	366 -217
MB805G	♦DII	366 -218
MB1005	♦DII	367 -118
MB1005G	♦DII	367 -119
MB1505	♦DII	368 -210
MB1510	♦DII	369 -116
MB2505	♦DII	369 -193
MB2510	♦DII	370 -139
MB3505	♦DII	371 - 25
MB3510	♦DII	371 -122
MB-1D	SAKJ	406 - 56
MBD101	♦MOTA	439 - 84
MBD102	♦MOTA	438 -107
MBD201	♦MOTA	438 -108
MBD301	♦MOTA	438 -109
MBD501	♦MOTA	438 -110
MBD502	♦MOTA	439 - 1
MBD701	♦MOTA	439 - 2
MBD702	♦MOTA	439 - 3
MBI-101	♦MOTA	439 - 85
MBR030	♦MOTA	374 - 18
MBR040	♦MOTA	374 - 20
MBR115P	♦MOTA	374 - 22
MBR120P	♦MOTA	279 -196
MBR130P	♦MOTA	279 -199
MBR140P	♦MOTA	279 -200
MBR320M	♦MOTA	296 - 16
MBR320P	♦MOTA	287 -151
MBR330M	♦MOTA	296 - 17
MBR330P	♦MOTA	287 -157
MBR335M	MOTA	287 -158
MBR340M	♦MOTA	296 - 21
MBR340P	♦MOTA	287 -160
MBR735	♦MOTA	293 - 34
MBR745	♦MOTA	293 - 35
MBR1020	♦MOTA	293 -194
MBR1035	♦MOTA	293 -196
MBR1045	♦MOTA	293 -198
MBR1060	♦MOTA	374 -150
MBR1520	♦MOTA	374 -162
MBR1530	♦MOTA	374 -167
MBR1535	♦MOTA	296 - 18
MBR1535CT	♦MOTA	296 - 19
MBR1540	♦MOTA	374 -177
MBR1545CT	♦MOTA	296 - 22
MBR1635	♦MOTA	296 -178
MBR1645	♦MOTA	296 -181
MBR2035CT	♦MOTA	297 - 92
MBR2045CT	♦MOTA	297 - 95
MBR2520	♦MOTA	298 - 90
MBR2530	♦MOTA	298 - 94
MBR2535	MOTA	298 - 98
MBR2535CT	♦MOTA	299 -203
MBR2540	♦MOTA	298 -101
MBR2545CT	♦MOTA	300 - 2
MBR3020CT	♦MOTA	299 -190
MBR3035CT	♦MOTA	299 -200
MBR3035PT	♦MOTA	375 -174
MBR3045CT	♦MOTA	296 - 23
MBR3045HI	MOTA	296 - 24
MBR3045PT	♦MOTA	375 -180
MBR3520	♦MOTA	300 -188
MBR3535	♦MOTA	300 -192
MBR3545	♦MOTA	300 -193
MBR3545H1	♦MOTA	300 -194
MBR3545H	♦MOTA	300 -195
MBR4020	♦MOTA	301 - 78
MBR4030	♦MOTA	301 - 83
MBR4030PF	♦MOTA	301 - 82
MBR4035	♦MOTA	301 - 84
MBR4040	♦MOTA	301 - 88
MBR5825H1	♦MOTA	374 -175

TYPE No.	MFRS	Pg&Line
MBR5825H	♦MOTA	374 -176
MBR5831H1	♦MOTA	375 - 1
MBR5831H	♦MOTA	375 - 2
MBR6020	♦MOTA	375 - 57
MBR6020B	♦MOTA	375 - 58
MBR6035	♦MOTA	375 - 61
MBR6035B	♦MOTA	375 - 62
MBR6035PF	♦MOTA	375 - 63
MBR6045	♦MOTA	375 - 71
MBR6045B	♦MOTA	375 - 72
MBR6045H1	♦MOTA	375 - 73
MBR6045H	♦MOTA	375 - 74
MBR6045PF	♦MOTA	375 - 75
MBR6535	♦MOTA	375 - 86
MBR6545	♦MOTA	375 - 88
MBR7520	♦MOTA	375 - 90
MBR7530	♦MOTA	375 - 91
MBR7535	♦MOTA	375 - 92
MBR7540	♦MOTA	375 - 93
MBR7545	♦MOTA	375 - 94
MBR7545H1	♦MOTA	375 - 95
MBR7545H	♦MOTA	375 - 96
MBR8035	♦MOTA	375 -110
MBR8045	♦MOTA	375 -113
MBR12035CT	♦MOTA	375 -207
MBR12045CT	♦MOTA	375 -210
MBR20035CT	♦MOTA	376 - 2
MBR20045CT	♦MOTA	376 - 10
MBR30035CT	♦MOTA	376 - 15
MBR30045CT	♦MOTA	376 - 18
MBRL030	♦MOTA	374 - 19
MBRL040	♦MOTA	374 - 21
MC001	♦MSC	246 - 84
MC001A	♦MSC	246 - 85
MC002	♦MSC	249 -110
MC4B1,C1	MSC	227 -182
MC4B2,C2	MSC	227 -183
MC005	♦MSC	243 - 93
MC5B1,C1	MSC	227 -204
MC5B2,C2	MSC	227 -205
MC5B3	MSC	227 -202
MC5C3	MSC	227 -203
MC6A1,B1,C1	MSC	228 - 3
MC6A2,B2,C2	MSC	228 - 4
MC6A3	MSC	228 - 5
MC6B3	MSC	228 - 6
MC6C3	MSC	228 - 7
MC7A1,B1,C1	MSC	228 - 8
MC7A2,B2,C2	MSC	228 - 9
MC7A3	MSC	228 - 10
MC7B3	MSC	228 - 11
MC7C3	MSC	228 - 12
MC8A1,B1	MSC	228 - 13
MC8A2,B2	MSC	228 - 14
MC8A3	MSC	228 - 15
MC8B3	MSC	228 - 16
MC9A1,B1	MSC	228 - 17
MC9A2,B2	MSC	228 - 18
MC9A3	MSC	228 - 19
MC9B3	MSC	228 - 20
MC10A1,B1	MSC	228 - 24
MC10A2,B2	MSC	228 - 25
MC10A3	MSC	228 - 26
MC10B3	MSC	228 - 27
MC11A1,B1	MSC	228 - 29
MC11A2,B2	MSC	228 - 30
MC11A3	MSC	228 - 31
MC11B3	MSC	228 - 32
MC12A1,B1	MSC	228 - 34
MC12A2,B2	MSC	228 - 35
MC12A3	MSC	228 - 36
MC12B3	MSC	228 - 37
MC13A1,B1	MSC	228 - 39
MC13A2,B2	MSC	228 - 40
MC14A1,B1	MSC	228 - 42
MC14A2,B2	MSC	228 - 43
MC15A1,B1	MSC	228 - 44
MC15A2,B2	MSC	228 - 45
MC020	♦MSC	235 -206
MC020A	♦MSC	235 -207
MC021	♦MSC	235 -208
MC021A	♦MSC	235 -209
MC022	♦MSC	235 -210
MC022A	♦MSC	235 -211
MC023	♦MSC	235 -212
MC023A	♦MSC	236 -199
MC025	MSC	275 - 83
MC030	♦MSC	235 -213
MC030A	♦MSC	235 -214
MC30#B	♦SOD	282 -108
MC031	♦MSC	419 - 58
MC031A	♦MSC	419 - 59
MC032	♦MSC	419 - 60
MC032A	♦MSC	419 - 61
MC040	♦MSC	235 -215
MC040A	♦MSC	235 -216
MC041	♦MSC	421 -142
MC041A	♦MSC	421 -143
MC042	♦MSC	421 -144
MC042A	♦MSC	421 -145
MC050	♦MSC	235 -217
MC050A	♦MSC	235 -218
MC051	♦MSC	423 - 87
MC051A	♦MSC	423 - 88
MC51#B	THEF	235 -118
MC052	♦MSC	423 - 89
MC052A	♦MSC	423 - 90
MC060	♦MSC	235 -219
MC060A	♦MSC	235 -220
MC60	♦MSC	235 - 10
MC061	♦MSC	424 -140
MC061A	♦MSC	424 -141
MC61	♦MSC	235 - 11
MC062	♦MSC	424 -142

TYPE No.	MFRS	Pg&Line
MC062A	♦MSC	424 -143
MC070	♦MSC	236 - 1
MC070A	♦MSC	236 - 2
MC70	♦MSC	176 -200
MC71	♦MSC	179 -131
MC72	♦MSC	184 -125
MC73	♦MSC	190 - 96
MC080	♦MSC	235 -185
MC080A	♦MSC	235 -186
MC081	♦MSC	426 - 20
MC081A	♦MSC	426 - 21
MC082	♦MSC	426 - 22
MC082A	♦MSC	426 - 23
MC091	♦MSC	427 - 45
MC091A	♦MSC	427 - 46
MC092	♦MSC	428 - 61
MC092A	♦MSC	428 - 62
MC093	♦MSC	428 -192
MC093A	♦MSC	428 -193
MC094	♦MSC	429 -186
MC094A	♦MSC	429 -187
MC095	♦MSC	427 - 47
MC095A	♦MSC	427 - 48
MC096	♦MSC	428 - 63
MC096A	♦MSC	428 - 64
MC097	♦MSC	428 -194
MC097A	♦MSC	428 -195
MC098	♦MSC	429 -188
MC098A	♦MSC	429 -189
MC100	♦MSC	235 -187
MC100A	♦MSC	235 -188
MC103	MSC	245 -183
MC110	♦MSC	235 -189
MC110A	♦MSC	235 -190
MC110AS	MSC	235 -191
MC110S	MSC	235 -192
MC120	♦MSC	235 -193
MC120A	♦MSC	235 -194
MC120AS	MSC	235 -195
MC120S	MSC	235 -196
MC130	♦MSC	234 -125
MC130A	♦MSC	234 -126
MC130AS	MSC	234 -127
MC130S	MSC	234 -128
MC140	♦MSC	234 -129
MC140A	♦MSC	234 -130
MC140AS	MSC	234 -131
MC140S	MSC	234 -132
MC150	♦MSC	234 -133
MC150A	♦MSC	234 -134
MC150AS	MSC	234 -135
MC150S	MSC	234 -136
MC151	♦MSC	401 - 13
MC152	♦MSC	401 - 10
MC153	♦MSC	401 - 8
MC154	♦MSC	414 -181
MC155	♦MSC	414 -179
MC156	♦MSC	414 -176
MC157	♦MSC	419 - 48
MC158	♦MSC	419 - 45
MC159	♦MSC	419 - 42
MC160	♦MSC	421 -132
MC161	♦MSC	421 -130
MC162	♦MSC	421 -126
MC170	♦MSC	235 -197
MC200#B	♦MSC	423 - 77
MC201#B	♦MSC	423 - 71
MC202#B	♦MSC	424 -137
MC203#B	♦MSC	424 -124
MC204	♦MSC	425 - 68
MC205#B	♦MSC	425 - 61
MC206	♦MSC	426 - 17
MC207	♦MSC	426 - 4
MC208	♦MSC	426 -152
MC209	♦MSC	426 -153
MC210	♦MSC	427 - 43
MC211	♦MSC	427 - 28
MC212	♦MSC	428 - 3
MC213	♦MSC	427 -220
MC214	♦MSC	428 - 58
MC215	♦MSC	428 - 43
MC216	♦MSC	428 -162
MC217	♦MSC	428 -158
MC218	♦MSC	428 -190
MC219	♦MSC	428 -184
MC220	♦MSC	429 - 32
MC221	♦MSC	429 - 25
MC222	♦MSC	429 -183
MC223	♦MSC	429 -175
MC224	♦MSC	430 - 14
MC225	♦MSC	430 - 12
MC226	♦MSC	430 - 47
MC227	♦MSC	430 - 40
MC228	♦MSC	430 - 72
MC229	♦MSC	430 - 70
MC230	♦MSC	430 -125
MC231	♦MSC	430 -117
MC433	♦MSC	246 -132
MC456	♦MSC	236 - 15
MC456A	♦MSC	235 - 12
MC457	♦MSC	234 -103
MC457A	♦MSC	235 - 13
MC458	♦MSC	233 -138
MC458A	♦MSC	235 - 14
MC459	♦MSC	232 -178
MC459A	♦MSC	235 - 15
MC461	♦MSC	234 -100
MC461A	♦MSC	235 - 16
MC462	♦MSC	232 -182
MC462A	♦MSC	235 - 17
MC463	♦MSC	232 -174
MC463A	♦MSC	235 - 18
MC464	♦MSC	232 -179
MC464A	♦MSC	235 - 19

TYPE No.	MFRS	Pg&Line
MC482	♦MSC	235 - 52
MC482A	♦MSC	235 - 20
MC482B	♦MSC	235 - 21
MC483	♦MSC	235 - 53
MC483A	♦MSC	235 - 22
MC483B	♦MSC	235 - 23
MC484	♦MSC	235 - 54
MC484A	♦MSC	235 - 24
MC484B	♦MSC	235 - 25
MC485	♦MSC	235 - 55
MC485A	♦MSC	235 - 26
MC485B	♦MSC	235 - 27
MC486	♦MSC	235 - 56
MC486A	♦MSC	235 - 28
MC486B	♦MSC	235 - 29
MC487	♦MSC	235 - 57
MC487A	♦MSC	235 - 30
MC487B	♦MSC	235 - 31
MC488	♦MSC	235 - 58
MC488A	♦MSC	235 - 32
MC488B	♦MSC	235 - 33
MC643	♦MSC	243 - 77
MC643A	♦MSC	243 - 78
MC658	♦MSC	243 - 53
MC658A	♦MSC	243 - 54
MC659	♦MSC	249 - 37
MC659A	♦MSC	249 - 38
MC660	♦MSC	249 - 80
MC660A	♦MSC	249 - 81
MC661	♦MSC	249 -126
MC661A	♦MSC	249 -127
MC662	♦MSC	243 - 38
MC662A	♦MSC	243 - 39
MC663	♦MSC	243 - 40
MC663A	♦MSC	243 - 31
MC678	♦MSC	235 -198
MC778	♦MSC	243 - 64
MC779	♦MSC	243 - 79
MC794	♦MSC	242 -216
MC795	♦MSC	243 - 9
MC796	♦MSC	243 - 10
MC797	♦MSC	243 - 59
MC798	♦MSC	243 - 49
MC799	♦MSC	243 - 60
MC800	♦MSC	243 - 61
MC801	♦MSC	243 - 70
MC802	♦MSC	243 - 71
MC803	♦MSC	243 - 85
MC804	♦MSC	243 - 86
MC806	♦MSC	243 - 44
MC807	♦MSC	243 - 80
MC808	♦MSC	243 - 45
MC809	♦MSC	249 -124
MC837	♦MSC	249 - 73
MC837A	♦MSC	249 - 68
MC838	♦MSC	249 - 94
MC839	♦MSC	249 -119
MC840	♦MSC	249 - 27
MC841	♦MSC	249 - 92
MC842	♦MSC	249 -116
MC843	♦MSC	249 -132
MC844	♦MSC	249 - 74
MC845	♦MSC	249 -120
MC890	♦MSC	234 -104
MC891	♦MSC	243 - 2
MC892	♦MSC	243 - 55
MC893	♦MSC	243 - 90
MC903	♦MSC	245 -184
MC903A	♦MSC	245 -185
MC904	♦MSC	245 - 92
MC904A	♦MSC	245 - 93
MC905	♦MSC	245 - 5
MC905A	♦MSC	245 - 6
MC906	♦MSC	245 - 7
MC906A	♦MSC	245 - 8
MC907	♦MSC	245 - 94
MC907A	♦MSC	245 - 95
MC908	♦MSC	245 -186
MC908A	♦MSC	245 -187
MC914	♦MSC	247 - 43
MC914A	♦MSC	247 - 44
MC916	♦MSC	247 - 45
MC916A	♦MSC	247 - 46
MC1031	♦MSC	419 - 49
MC1031A	♦MSC	419 - 50
MC1032	♦MSC	419 - 51
MC1032A	♦MSC	419 - 52
MC1041	♦MSC	421 -133
MC1041A	♦MSC	421 -134
MC1042	♦MSC	421 -135
MC1042A	♦MSC	421 -136
MC1051	♦MSC	423 - 78
MC1051A	♦MSC	423 - 79
MC1052	♦MSC	423 - 80
MC1052A	♦MSC	423 - 81
MC1061	♦MSC	424 -135
MC1061A	♦MSC	424 -136
MC1062	♦MSC	424 -126
MC1062A	♦MSC	424 -127
MC1081	♦MSC	426 - 15
MC1081A	♦MSC	426 - 16
MC1082	♦MSC	426 - 6
MC1082A	♦MSC	426 - 7
MC1091	♦MSC	427 - 30
MC1091A	♦MSC	427 - 31
MC1092	♦MSC	428 - 53
MC1092A	♦MSC	428 - 44
MC1093	♦MSC	428 -185
MC1093A	♦MSC	428 -186
MC1094	♦MSC	429 -176
MC1094A	♦MSC	429 -177
MC1095	♦MSC	427 - 32
MC1095A	♦MSC	427 - 33
MC1096	♦MSC	428 - 45

TYPE No.	MFRS	Pg&Line
MC1096A	♦MSC	428 - 46
MC1097	♦MSC	428 -187
MC1097A	♦MSC	428 -188
MC1098	♦MSC	429 -178
MC1098A	♦MSC	429 -179
MC1511	♦MSC	247 -103
MC1512	♦MSC	247 -102
MC1513	♦MSC	249 - 88
MC1514	♦MSC	247 -114
MC1515	♦MSC	247 -115
MC1520	♦MSC	236 -200
MC1521	♦MSC	236 -201
MC1522	♦MSC	236 -202
MC1523	♦MSC	236 -203
MC1524	♦MSC	236 -204
MC1525	♦MSC	236 -205
MC1526	♦MSC	236 -206
MC1527	♦MSC	236 -154
MC1528	♦MSC	236 -155
MC1529	♦MSC	236 -139
MC1545	♦MSC	238 -114
MC1546	♦MSC	238 -217
MC1547	♦MSC	239 - 38
MC1548	♦MSC	239 -109
MC1549	♦MSC	239 -143
MC1550	♦MSC	239 -203
MC5600	MSC	411 - 12
MC5601	MSC	414 -217
MC5602	MSC	417 -119
MC5603	MSC	419 - 87
MC5604	MSC	421 -158
MC5605	MSC	423 -102
MC5606	MSC	425 -135
MC5607	MSC	427 - 53
MC5610	MSC	249 -167
MC5611	MSC	249 -181
MC5612	MSC	249 -194
MC5613	MSC	249 -168
MC5614	MSC	249 -182
MC5615	MSC	249 -195
MC5616	MSC	249 -207
MC5617	MSC	249 -218
MC5618	MSC	250 - 17
MC5619	MSC	250 - 27
MC6007,A	MSC	172 -130
MC6008,A	MSC	174 -131
MC6009,A	MSC	176 -208
MC6010,A	MSC	177 -167
MC6011,A	MSC	179 -160
MC6012,A	MSC	181 -141
MC6013,A	MSC	184 -188
MC6014,A	MSC	187 - 12
MC6015,A	MSC	188 -176
MC6016,A	MSC	190 -136
MC6017,A	MSC	192 -113
MC6018,A	MSC	194 -137
MC6019,A	MSC	196 - 42
MC6020,A	MSC	198 - 44
MC6021,A	MSC	200 - 46
MC6022,A	MSC	201 -149
MC6023,A	MSC	203 - 54
MC6024,A	MSC	204 -197
MC6025,A	MSC	206 -123
MC6026,A	MSC	208 - 9
MC6027,A	MSC	209 - 98
MC6028,A	MSC	210 -137
MC6029,A	MSC	211 -158
MC6030,A	MSC	212 -170
MC6107,A	MSC	173 - 36
MC6108,A	MSC	175 - 99
MC6109,A	MSC	177 - 69
MC6110,A	MSC	178 - 73
MC6111,A	MSC	180 - 68
MC6112,A	MSC	182 - 51
MC6113,A	MSC	185 - 86
MC6114,A	MSC	187 -136
MC6115,A	MSC	189 - 63
MC6116,A	MSC	191 - 24
MC6117,A	MSC	192 -197
MC6118,A	MSC	195 - 28
MC6119,A	MSC	196 -127
MC6120,A	MSC	198 -138
MC6121,A	MSC	200 -133
MC6122,A	MSC	202 - 31
MC6123,A	MSC	203 -134
MC6124,A	MSC	205 - 68
MC6125,A	MSC	206 -204
MC6126,A	MSC	208 - 92
MC6127,A	MSC	209 -160
MC6128,A	MSC	210 -197
MC6129,A	MSC	212 - 10
MC6130,A	MSC	213 - 24
MC6308,A	MSC	175 -160
MC6309,A	MSC	177 - 73
MC6310,A	MSC	178 -163
MC6311,A	MSC	180 -155
MC6312,A	MSC	182 -144
MC6313,A	MSC	185 -176
MC6314,A	MSC	188 - 39
MC6315,A	MSC	189 -152
MC6316,A	MSC	191 -127
MC6317,A	MSC	193 - 69
MC6318,A	MSC	195 -124
MC6319,A	MSC	197 - 7
MC6320,A	MSC	199 - 23
MC6321,A	MSC	201 - 16
MC6322,A	MSC	202 -123
MC6323,A	MSC	204 - 9
MC6324,A	MSC	205 -163
MC6325,A	MSC	207 - 87
MC6326,A	MSC	208 -180
MC6327,A	MSC	210 - 29
MC6328,A	MSC	211 - 66
MC6329,A	MSC	212 - 77

Δ-Registered with JEDEC by this manufacturer

♦-Mfr's data sheet available in microfilm service

1. TYPE No. CROSS INDEX

IN TYPE NUMBER SEQUENCE

TYPE No.	MFRS	Pg&Line
MC6330,A	MSC	213 - 94
MC6400A	♦MSC	175 -195
MC6400B	♦MSC	175 -196
MC6400C	♦MSC	176 - 5
MC6401A	♦MSC	175 -197
MC6401B	♦MSC	175 -198
MC6401C	♦MSC	176 - 6
MC6402A	♦MSC	175 -199
MC6402B	♦MSC	175 -200
MC6402C	♦MSC	176 - 7
MC6403A	♦MSC	175 -201
MC6403B	♦MSC	175 -202
MC6403C	♦MSC	176 - 8
MC6404A	♦MSC	175 -203
MC6404B	♦MSC	175 -204
MC6404C	♦MSC	176 - 9
MC6405A	♦MSC	175 -205
MC6405B	♦MSC	175 -206
MC6405C	♦MSC	176 - 10
MC6406A	♦MSC	175 -207
MC6406B	♦MSC	175 -208
MC6406C	♦MSC	176 - 11
MC6407A	♦MSC	175 -209
MC6407B	♦MSC	175 -210
MC6407C	♦MSC	176 - 12
MC6408A	♦MSC	180 -196
MC6408B	♦MSC	180 -197
MC6408C	♦MSC	180 -216
MC6409A	♦MSC	180 -198
MC6409B	♦MSC	180 -199
MC6409C	♦MSC	180 -217
MC6410A	♦MSC	180 -200
MC6410B	♦MSC	180 -201
MC6410C	♦MSC	180 -218
MC6411A	♦MSC	180 -202
MC6411B	♦MSC	180 -203
MC6411C	♦MSC	181 - 1
MC6412A	♦MSC	180 -204
MC6412B	♦MSC	180 -205
MC6412C	♦MSC	181 - 2
MC6413A	♦MSC	180 -206
MC6413B	♦MSC	180 -207
MC6413C	♦MSC	181 - 3
MC6414A	♦MSC	180 -208
MC6414B	♦MSC	180 -209
MC6414C	♦MSC	181 - 4
MC6415A	♦MSC	180 -210
MC6415B	♦MSC	180 -211
MC6415C	♦MSC	181 - 5
MC6416A	♦MSC	183 -131
MC6416B	♦MSC	183 -132
MC6416C	♦MSC	183 -159
MC6417A	♦MSC	183 -133
MC6417B	♦MSC	183 -134
MC6417C	♦MSC	183 -160
MC6418A	♦MSC	183 -135
MC6418B	♦MSC	183 -136
MC6418C	♦MSC	183 -161
MC6419A	♦MSC	183 -137
MC6419B	♦MSC	183 -138
MC6419C	♦MSC	183 -162
MC6420A	♦MSC	183 -139
MC6420B	♦MSC	183 -140
MC6420C	♦MSC	183 -163
MC6421A	♦MSC	183 -141
MC6421B	♦MSC	183 -142
MC6421C	♦MSC	183 -164
MC6422A	♦MSC	183 -143
MC6422B	♦MSC	183 -144
MC6422C	♦MSC	183 -165
MC6423A	♦MSC	183 -145
MC6423B	♦MSC	183 -146
MC6423C	♦MSC	183 -166
MC6424A	MSC	176 - 1
MC6424B	MSC	176 - 2
MC6424C	MSC	176 - 13
MC6425A	MSC	176 - 3
MC6425B	MSC	176 - 4
MC6425C	MSC	176 - 14
MC6426A	MSC	180 -212
MC6426B	MSC	180 -213
MC6426C	MSC	181 - 6
MC6427A	MSC	180 -214
MC6427B	MSC	180 -215
MC6427C	MSC	181 - 7
MC6428A	MSC	183 -147
MC6428B	MSC	183 -148
MC6428C	MSC	183 -167
MC6429A	MSC	183 -149
MC6429B	MSC	183 -150
MC6429C	MSC	183 -168
MC7000	♦MSC	247 - 2
MCL1300	♦MOTA	435 - 34
MCL1301	♦MOTA	435 - 35
MCL1302	♦MOTA	435 - 36
MCL1303	♦MOTA	435 - 37
MCL1304	♦MOTA	435 - 38
MCLTC6010	♦MOTA	176 - 98
MCLTC6025	♦MOTA	176 - 99
MCLTC6050	♦MOTA	176 -100
MCLTC6100	♦MOTA	176 -101
MCV	♦SOD	282 -106
MD5	SELI	442 - 67
MD12H10	ORIJ	428 -129
MD12N10	ORIJ	428 -130
MD22N01	ORIJ	430 -113
MD25X1	ORIJ	431 -109
MD45H01	ORIJ	432 -214
MD50	♦SELI	234 -107
MD100X08C	ORIJ	433 -125
MD125N08C	ORIJ	433 -183
MD234	MITJ	234 -137
MD235	MITJ	234 -138
MD236	MITJ	234 -139
MD237	MITJ	234 -140
MD238	MITJ	234 -141
MD358	♦UNI	439 - 4
MD-12H10	ORIJ	428 -131
MD-12N10	ORIJ	428 -132
MD-22N01	ORIJ	430 -114
MD-45H01	ORIJ	432 -215
MD-100X08C	ORIJ	433 -126
MD-125N08C	ORIJ	433 -184
MDA100A	♦MOTA	280 - 23
MDA101A	♦MOTA	280 -100
MDA102A	♦MOTA	280 -198
MDA104A	♦MOTA	281 -103
MDA106A	♦MOTA	281 -216
MDA108A	♦MOTA	282 - 80
MDA110A	♦MOTA	401 -212
MDA200	♦MOTA	285 -219
MDA201	♦MOTA	286 - 33
MDA202	♦MOTA	286 - 74
MDA204	♦MOTA	286 -123
MDA206	♦MOTA	286 -172
MDA208	♦MOTA	286 -207
MDA210	♦MOTA	402 -121
MDA220	♦MOTA	349 - 78
MDA800	♦MOTA	293 - 65
MDA801	♦MOTA	293 - 77
MDA802	♦MOTA	293 - 91
MDA804	♦MOTA	293 -110
MDA806	♦MOTA	293 -120
MDA920A1	♦MOTA	361 -128
MDA920A2	♦MOTA	361 -140
MDA920A3	♦MOTA	361 -166
MDA920A4	♦MOTA	361 -199
MDA920A5	♦MOTA	362 - 14
MDA920A6	♦MOTA	362 - 35
MDA920A7	♦MOTA	362 - 69
MDA920A8	♦MOTA	362 - 96
MDA920A9	♦MOTA	362 -115
MDA970A1	♦MOTA	365 - 13
MDA970A2	♦MOTA	367 - 10
MDA970A3	♦MOTA	367 - 27
MDA970A5	♦MOTA	367 - 43
MDA970A6	♦MOTA	367 - 60
MDA980-1	♦MOTA	368 -108
MDA980-2	♦MOTA	368 -117
MDA980-3	♦MOTA	368 -133
MDA980-4	♦MOTA	368 -143
MDA980-5	♦MOTA	368 -153
MDA980-6	♦MOTA	368 -168
MDA990-1	♦MOTA	370 -151
MDA990-2	♦MOTA	370 -159
MDA990-3	♦MOTA	370 -172
MDA990-4	♦MOTA	370 -181
MDA990-5	♦MOTA	370 -190
MDA990-6	♦MOTA	370 -209
MDA1200	♦MOTA	294 -180
MDA1201	♦MOTA	294 -210
MDA1202	♦MOTA	295 - 24
MDA1204	♦MOTA	295 - 75
MDA1206	♦MOTA	295 -124
MDA2500	♦MOTA	369 -184
MDA2501	♦MOTA	369 -207
MDA2502	♦MOTA	370 - 18
MDA2504	♦MOTA	370 - 55
MDA2506	♦MOTA	370 - 90
MDA2550	♦MOTA	369 -185
MDA2551	♦MOTA	369 -208
MDA3500	♦MOTA	371 - 18
MDA3501	♦MOTA	371 - 37
MDA3502	♦MOTA	371 - 57
MDA3504	♦MOTA	371 - 74
MDA3506	♦MOTA	371 - 90
MDA3508	♦MOTA	371 -106
MDA3510	♦MOTA	371 -118
MDA3550	♦MOTA	371 - 19
MDA3551	♦MOTA	371 - 38
MDB20B4	♦HITJ	369 -161
MDB20B6	♦HITJ	369 -165
MDB30A4	♦HITJ	370 -200
MDB30A6	♦HITJ	370 -216
MDD25-04N1	BBCG	300 -170
MDD25-06N1	BBCG	300 -172
MDD25-08N1	BBCG	300 -175
MDD25-12N1	BBCG	407 - 10
MDD25-14N1	BBCG	409 -138
MDD25-16N1	BBCG	412 -131
MDD42-04N1	BBCG	303 -219
MDD42-06N1	BBCG	303 -220
MDD42-08N1	BBCG	304 - 1
MDD42-12N1	BBCG	407 - 75
MDD42-14N1	BBCG	409 -181
MDD42-16N1	BBCG	412 -168
MDX653	♦UNI	439 - 5
MDX654	♦UNI	439 - 6
MDX655	♦UNI	439 - 7
ME30	THEF	419 - 82
ME60	THEF	424 -168
ME100	THEF	427 - 74
ME120	THEF	428 - 81
ME200	THEF	430 -149
MF2A100	♦AEIL	258 -117
MF2A100F	♦AEIL	258 -118
MF2A200	♦AEIL	259 -116
MF2A200F	♦AEIL	259 -117
MF2A400	♦AEIL	260 - 76
MF2A400F	♦AEIL	260 - 77
MF2A600	♦AEIL	260 -206
MF2A600F	♦AEIL	260 -207
MF2A800	♦AEIL	261 - 64
MF2B100	♦AEIL	258 -134
MF2B100F	♦AEIL	258 -135
MF2B200	♦AEIL	259 -131
MF2B200F	♦AEIL	259 -132
MF2B400	♦AEIL	260 - 90
MF2B400F	♦AEIL	260 - 91
MF2B600	♦AEIL	261 - 6
MF2B600F	♦AEIL	261 - 7
MF2B800	♦AEIL	261 - 77
MF2B800F	♦AEIL	261 - 78
MF10-100	♦AEIL	258 -119
MF10-200	♦AEIL	259 -118
MF10-400	♦AEIL	260 - 78
MF10-600	♦AEIL	260 -208
MF10-800	♦AEIL	261 - 65
MF12-600	♦AEIL	260 -179
MF12-800	♦AEIL	261 - 54
MF12-1000	♦AEIL	261 -116
MF12-1200	♦AEIL	261 -150
MF35-600	♦AEIL	260 -180
MF35-800	♦AEIL	261 - 55
MF35-1000	♦AEIL	261 -117
MF35-1200	♦AEIL	261 -151
MF41-100	♦AEIL	258 -143
MF41-200	♦AEIL	259 -146
MF41-400	♦AEIL	260 -102
MF41-600	♦AEIL	261 - 25
MF41-800	♦AEIL	261 - 88
MF41-1000	♦AEIL	261 -139
MF41-1200	♦AEIL	261 -159
MF70-600	♦AEIL	260 -181
MF70-800	♦AEIL	261 - 56
MF70-1000	♦AEIL	261 -152
MF70-1200	♦AEIL	261 -153
MF71-100	♦AEIL	258 -147
MF71-200	♦AEIL	259 -153
MF71-400	♦AEIL	260 -112
MF71-600	♦AEIL	261 - 30
MF71-800	♦AEIL	261 - 95
MF71-1000	♦AEIL	261 -145
MF71-1200	♦AEIL	261 -160
MFE16-50	♦AEIL	257 -113
MFE16-100	♦AEIL	258 - 18
MFE16-150	♦AEIL	258 -177
MFE41-50	♦AEIL	257 -123
MFE41-100	♦AEIL	258 - 30
MFE41-150	♦AEIL	258 -189
MGLA28,A,B	♦CODI	165 - 34
MGLA31,A,B	♦CODI	165 -158
MGLA35,A,B	♦CODI	166 -140
MGLA39,A,B	♦CODI	168 - 4
MGLA43,A,B	♦CODI	169 - 27
MGLA47,A,B	♦CODI	170 - 76
MGLA51,A,B	♦CODI	171 -155
MGLA56,A,B	♦CODI	173 - 37
MGLA62,A,B	♦CODI	175 -100
MGLA68,A,B	♦CODI	178 - 74
MGLA75,A,B	♦CODI	180 - 69
MGLA82,A,B	♦CODI	182 - 52
MGLA91,A,B	♦CODI	185 - 87
MGLA100,A,B	♦CODI	187 -137
MH67	♦SOD	282 -111
MH68	♦SOD	282 -114
MH69	♦SOD	282 -120
MH70	♦SOD	282 -126
MH71	♦SOD	282 -138
MH72	♦SOD	282 -144
MH73	♦SOD	402 - 14
MH500	♦SOD	282 -132
MH1200	SOD	406 - 63
MHF15-04do3	BBCG	370 -198
MHF15-05do3	BBCG	370 -201
MHO15-02do3	BBCG	370 -179
MHO15-04do3	BBCG	370 -199
MHO15-05do3	BBCG	370 -202
MHO15-06do3	BBCG	370 -215
MHVG10	♦CODI	401 - 14
MHVG20	♦CODI	414 -182
MHVG30	♦CODI	419 - 56
MHVG40	♦CODI	421 -140
MHVG50	♦CODI	423 - 85
MHVG60	♦CODI	424 -138
MHVS10	♦CODI	247 -200
MHVS20	♦CODI	247 -218
MHVS30	♦CODI	248 - 3
MHVS40	♦CODI	248 - 7
MHVS50	♦CODI	248 - 10
MHVS60	♦CODI	248 - 14
MI101#B	SAKJ	280 - 75
MI101R	SAKJ	280 - 76
MI102	SAKJ	280 -167
MI102R	SAKJ	280 -168
MI104	SAKJ	281 - 38
MI104R	SAKJ	281 - 74
MI106	SAKJ	281 -189
MI106R	SAKJ	281 -190
MI151R	♦SAKJ	283 -143
MI152R	♦SAKJ	283 -208
MI154R	♦SAKJ	284 - 95
MI156R	♦SAKJ	284 -197
MI-151	♦SAKJ	283 -144
MI-152	♦SAKJ	283 -209
MI-154	♦SAKJ	284 - 96
MI-156	♦SAKJ	284 -198
MKT1V200	♦MOTA	326 - 33
MKT1V200A	♦MOTA	326 - 34
MKT1V200B	♦MOTA	326 - 35
ML8.2A	MSC	349 - 79
ML10A	MSC	349 - 80
ML20A	MSC	349 - 81
ML30A	MSC	349 - 82
ML39A	MSC	349 - 83
ML51A	MSC	349 - 84
ML60A	MSC	349 - 85
ML82A	MSC	349 - 86
ML100A	MSC	349 - 87
ML110A	MSC	349 - 88
ML4202	MICB	445 - 59
ML4204	MICB	445 - 60
ML4206	MICB	445 - 61
ML4402	MICB	445 - 62
MLL5221	♦MOTA	164 - 66
MLL5221A	♦MOTA	164 - 62
MLL5221B	♦MOTA	164 - 53
MLL5222	♦MOTA	164 -104
MLL5222A	♦MOTA	164 -102
MLL5222B	♦MOTA	164 - 99
MLL5223	♦MOTA	164 -187
MLL5223A	♦MOTA	164 -183
MLL5223B	♦MOTA	164 -169
MLL5224	♦MOTA	165 - 28
MLL5224A	♦MOTA	165 - 26
MLL5224B	♦MOTA	165 - 23
MLL5225	♦MOTA	165 -126
MLL5225A	♦MOTA	165 -122
MLL5225B	♦MOTA	165 -106
MLL5226	♦MOTA	166 - 61
MLL5226A	♦MOTA	166 - 56
MLL5226B	♦MOTA	166 - 39
MLL5227	♦MOTA	167 - 25
MLL5227A	♦MOTA	167 - 20
MLL5227B	♦MOTA	167 - 5
MLL5228	♦MOTA	167 -202
MLL5228A	♦MOTA	167 -197
MLL5228B	♦MOTA	167 -182
MLL5229	♦MOTA	169 - 16
MLL5229A	♦MOTA	169 - 11
MLL5229B	♦MOTA	168 -206
MLL5230	♦MOTA	170 - 63
MLL5230A	♦MOTA	170 - 58
MLL5230B	♦MOTA	170 - 40
MLL5231	♦MOTA	171 -143
MLL5231A	♦MOTA	171 -138
MLL5231B	♦MOTA	171 -121
MLL5232	♦MOTA	173 - 23
MLL5232A	♦MOTA	173 - 18
MLL5233	♦MOTA	174 - 14
MLL5233A	♦MOTA	174 - 10
MLL5233B	♦MOTA	172 -209
MLL5234	♦MOTA	175 - 87
MLL5234A	♦MOTA	175 - 82
MLL5234B	♦MOTA	175 - 61
MLL5235	♦MOTA	178 - 58
MLL5235A	♦MOTA	178 - 53
MLL5235B	♦MOTA	178 - 31
MLL5236	♦MOTA	180 - 55
MLL5236A	♦MOTA	180 - 51
MLL5236B	♦MOTA	180 - 30
MLL5237	♦MOTA	182 - 36
MLL5237A	♦MOTA	182 - 30
MLL5237B	♦MOTA	182 - 8
MLL5238	♦MOTA	183 -182
MLL5238A	♦MOTA	183 -179
MLL5238B	♦MOTA	183 -173
MLL5239	♦MOTA	185 - 71
MLL5239A	♦MOTA	185 - 64
MLL5239B	♦MOTA	185 - 43
MLL5240	♦MOTA	187 -118
MLL5240A	♦MOTA	187 -112
MLL5240B	♦MOTA	187 - 88
MLL5241	♦MOTA	189 - 55
MLL5241A	♦MOTA	189 - 49
MLL5241B	♦MOTA	189 - 30
MLL5242	♦MOTA	191 - 14
MLL5242A	♦MOTA	191 - 8
MLL5242B	♦MOTA	190 -201
MLL5243	♦MOTA	192 -189
MLL5243A	♦MOTA	192 -183
MLL5243B	♦MOTA	192 -167
MLL5244	♦MOTA	193 -200
MLL5244A	♦MOTA	193 -195
MLL5244B	♦MOTA	193 -187
MLL5245	♦MOTA	195 - 18
MLL5245A	♦MOTA	195 - 11
MLL5245B	♦MOTA	194 -187
MLL5246	♦MOTA	196 -120
MLL5246A	♦MOTA	196 -114
MLL5246B	♦MOTA	196 - 96
MLL5247	♦MOTA	197 -124
MLL5247A	♦MOTA	197 -119
MLL5247B	♦MOTA	197 -112
MLL5248	♦MOTA	198 -129
MLL5248A	♦MOTA	198 -123
MLL5248B	♦MOTA	198 -100
MLL5249	♦MOTA	199 -136
MLL5249A	♦MOTA	199 -133
MLL5249B	♦MOTA	199 -128
MLL5250	♦MOTA	200 -126
MLL5250A	♦MOTA	200 -120
MLL5250B	♦MOTA	200 -100
MLL5251	♦MOTA	202 - 21
MLL5251A	♦MOTA	202 - 15
MLL5251B	♦MOTA	201 -205
MLL5252	♦MOTA	203 -125
MLL5252A	♦MOTA	203 -119
MLL5252B	♦MOTA	203 -102
MLL5253	♦MOTA	204 -115
MLL5253A	♦MOTA	204 -112
MLL5253B	♦MOTA	204 -107
MLL5254	♦MOTA	205 - 59
MLL5254A	♦MOTA	205 - 53
MLL5254B	♦MOTA	205 - 34
MLL5255	♦MOTA	206 - 50
MLL5255A	♦MOTA	206 - 47
MLL5255B	♦MOTA	206 - 42
MLL5256	♦MOTA	206 -196
MLL5256A	♦MOTA	206 -189
MLL5256B	♦MOTA	206 -170
MLL5257	♦MOTA	208 - 83
MLL5257A	♦MOTA	208 - 77
MLL5257B	♦MOTA	208 - 58
MLL5258	♦MOTA	209 -154
MLL5258A	♦MOTA	209 -149
MLL5258B	♦MOTA	209 -134
MLL5259	♦MOTA	210 -191
MLL5259A	♦MOTA	210 -186
MLL5259B	♦MOTA	210 -170
MLL5260	♦MOTA	212 - 4
MLL5260A	♦MOTA	211 -202
MLL5260B	♦MOTA	211 -187
MLL5261	♦MOTA	213 - 18
MLL5261A	♦MOTA	213 - 13
MLL5261B	♦MOTA	212 -199
MLL5262	♦MOTA	214 - 21
MLL5262A	♦MOTA	214 - 16
MLL5262B	♦MOTA	214 - 5
MLL5263	♦MOTA	215 - 6
MLL5263A	♦MOTA	215 - 1
MLL5263B	♦MOTA	214 -190
MLL5264	♦MOTA	215 -150
MLL5264A	♦MOTA	215 -148
MLL5264B	♦MOTA	215 -145
MLL5265	♦MOTA	216 - 13
MLL5265A	♦MOTA	216 - 7
MLL5265B	♦MOTA	215 -200
MLL5266	♦MOTA	216 -188
MLL5266A	♦MOTA	216 -183
MLL5266B	♦MOTA	216 -172
MLL5267	♦MOTA	217 -175
MLL5267A	♦MOTA	217 -170
MLL5267B	♦MOTA	217 -160
MLL5268	♦MOTA	218 -156
MLL5268A	♦MOTA	218 -150
MLL5268B	♦MOTA	218 -142
MLL5269	♦MOTA	219 - 84
MLL5269A	♦MOTA	219 - 82
MLL5269B	♦MOTA	219 - 79
MLL5270	♦MOTA	219 -139
MLL5270A	♦MOTA	219 -134
MLL5270B	♦MOTA	219 -128
MLNA328	CODI	165 - 36
MLNA328A	CODI	165 - 35
MLNA328B	CODI	165 - 33
MLNA331	CODI	165 -160
MLNA331A	CODI	165 -159
MLNA331B	CODI	165 -157
MLNA335	CODI	166 -142
MLNA335A	CODI	166 -141
MLNA335B	CODI	166 -139
MLNA339	CODI	168 - 8
MLNA339A	CODI	168 - 5
MLNA339B	CODI	168 - 1
MLNA343	CODI	169 - 30
MLNA343A	CODI	169 - 28
MLNA343B	CODI	169 - 25
MLNA347	CODI	170 - 80
MLNA347A	CODI	170 - 77
MLNA347B	CODI	170 - 73
MLNA351	CODI	171 -159
MLNA351A	CODI	171 -156
MLNA351B	CODI	171 -153
MLNA356	CODI	173 - 42
MLNA356A	CODI	173 - 38
MLNA356B	CODI	173 - 33
MLNA362	CODI	175 -104
MLNA362A	CODI	175 -101
MLNA362B	CODI	175 - 97
MLNA368	CODI	178 - 80
MLNA368A	CODI	178 - 75
MLNA368B	CODI	178 - 69
MLNA375	CODI	180 - 74
MLNA375A	CODI	180 - 70
MLNA375B	CODI	180 - 65
MLNA382	CODI	182 - 58
MLNA382A	CODI	182 - 53
MLNA382B	CODI	182 - 47
MLNA391	CODI	185 - 92
MLNA391A	CODI	185 - 88
MLNA391B	CODI	185 - 83
MLNA3100	CODI	187 -143
MLNA3100A	CODI	187 -138
MLNA3100B	CODI	187 -131
MLV746A	♦CODI	166 - 65
MLV747A	♦CODI	167 - 29
MLV748A	♦CODI	168 - 6
MLV749A	♦CODI	169 - 29
MLV750A	♦CODI	170 - 78
MLV751A	♦CODI	171 -157
MLV752A	♦CODI	173 - 39
MLV753A	♦CODI	175 -102
MLV754A	♦CODI	178 - 76
MLV755A	♦CODI	180 - 71
MLV756A	♦CODI	182 - 54
MLV757A	♦CODI	185 - 89
MLV758A	♦CODI	187 -139
MLV759A	♦CODI	191 - 25
MLV4370A	♦CODI	164 - 68
MLV4371A	♦CODI	164 -190
MLV4372A	♦CODI	165 -129
MMBZ5227	SPR	166 -153
MMBZ5228	SPR	167 -113
MMBZ5229	SPR	168 -124
MMBZ5230	SPR	169 -148
MMBZ5231	SPR	171 - 28
MMBZ5232	SPR	172 - 94
MMBZ5233	SPR	173 -196
MMBZ5234	SPR	174 - 72
MMBZ5235	SPR	177 -133
MMBZ5236	SPR	179 -132
MMBZ5237	SPR	181 -104
MMBZ5238	SPR	183 -126
MMBZ5239	SPR	184 -126
MMBZ5240	SPR	186 -176
MMBZ5241	SPR	188 -153
MMBZ5242	SPR	190 - 97
MMBZ5243	SPR	192 - 92
MMBZ5244	SPR	193 -162

Δ-Registered with JEDEC by this manufacturer

♦-Mfr's data sheet available in microfilm service

1. TYPE No. CROSS INDEX

IN TYPE NUMBER SEQUENCE

TYPE No.	MFRS	Pg&Line
MMBZ5245	SPR	194 -106
MMBZ5246	SPR	196 - 22
MMBZ5247	SPR	197 - 94
MMBZ5248	SPR	198 - 14
MMBZ5249	SPR	199 -108
MMBZ5250	SPR	200 - 27
MMBZ5251	SPR	201 -119
MMBZ5252	SPR	203 - 39
MMBZ5253	SPR	204 - 91
MMBZ5254	SPR	204 -171
MMBZ5255	SPR	206 - 24
MMBZ5256	SPR	206 -110
MMBZ5257	SPR	207 -191
MMBZ5263	SPR	214 -153
MMBZ5265	SPR	215 -167
MMD70	♦MOTA	245 -220
MMD6050	♦MOTA	246 - 46
MMD6100	♦MOTA	246 - 47
MMD6150	♦MOTA	246 - 48
MMD7000	♦MOTA	246 - 49
MP61	♦DII	366 - 60
MP61G	♦DII	366 - 61
MP62	♦DII	366 - 85
MP62G	♦DII	366 - 86
MP64	♦DII	366 -114
MP64G	♦DII	366 -115
MP066	GIC	276 -190
MP066A	GIC	276 -191
MP66	♦DII	366 -142
MP66G	♦DII	366 -143
MP067	GIC	277 - 13
MP067A	GIC	277 - 14
MP068	GIC	277 - 48
MP068A	GIC	277 - 49
MP68	♦DII	366 -169
MP68G	♦DII	366 -170
MP81	♦DII	367 - 13
MP81G	♦DII	367 - 14
MP82	♦DII	367 - 30
MP82G	♦DII	367 - 31
MP84	♦DII	367 - 46
MP84G	♦DII	367 - 47
MP86	♦DII	367 - 63
MP86G	♦DII	367 - 64
MP88	♦DII	367 - 79
MP88G	♦DII	367 - 80
MP101	♦DII	367 -137
MP101G	♦DII	367 -151
MP102	♦DII	367 -175
MP102G	♦DII	367 -189
MP104	♦DII	367 -215
MP104G	♦DII	368 - 9
MP106	♦DII	368 - 33
MP106G	♦DII	368 - 47
MP108	♦DII	368 - 65
MP108G	♦DII	368 - 76
MP605	♦DII	366 - 36
MP605G	♦DII	366 - 37
MP610	♦DII	366 -189
MP610G	♦DII	366 -190
MP805	♦DII	366 -219
MP805G	♦DII	367 - 1
MP810	♦DII	367 - 92
MP810G	♦DII	367 - 93
MP1005	♦DII	367 -107
MP1005G	♦DII	367 -120
MP1010	♦DII	368 - 84
MP1010G	♦DII	368 - 91
MPD200	UNI	231 -115
MPD201	UNI	231 -118
MPD203	UNI	231 -116
MPD300	UNI	231 -120
MPD301	UNI	231 -121
MPD302	UNI	231 -122
MPD400	UNI	231 -124
MPD401	UNI	231 -125
MPD402	UNI	231 -126
MPI3401	♦MOTA	439 - 86
MPT5	♦GSE	349 - 89
MPT8	♦GSE	349 - 90
MPT8C	♦GSE	349 - 91
MPT10	♦GSE	349 - 92
MPT10C	♦GSE	349 - 93
MPT12	♦GSE	349 - 94
MPT12C	♦GSE	349 - 95
MPT15	♦GSE	349 - 96
MPT15C	♦GSE	349 - 97
MPT18	♦GSE	349 - 98
MPT18C	♦GSE	349 - 99
MPT22	♦GSE	349 -100
MPT22C	♦GSE	349 -101
MPT36	♦GSE	349 -102
MPT36C	♦GSE	349 -103
MPT45	♦GSE	349 -104
MPT45C	♦GSE	349 -105
MPTE5	GSE	349 -106
	♦MOTA	
MPTE5C	♦MOTA	349 -107
MPTE8	♦GSE	349 -108
	♦MOTA	
MPTE8C	♦GSE	349 -109
	♦MOTA	
MPTE10	GSE	349 -110
	♦MOTA	
MPTE10C	♦GSE	350 - 1
	♦MOTA	
MPTE12	GSE	350 - 2
	♦MOTA	
MPTE12C	♦GSE	350 - 3
	♦MOTA	
MPTE15	GSE	350 - 4
	♦MOTA	
MPTE15C	♦GSE	350 - 5
	♦MOTA	

TYPE No.	MFRS	Pg&Line
MPTE18	GSE	350 - 6
	♦MOTA	
MPTE18C	♦GSE	350 - 7
	♦MOTA	
MPTE22	GSE	350 - 8
	♦MOTA	
MPTE22C	♦GSE	350 - 9
	♦MOTA	
MPTE36	GSE	350 - 10
	♦MOTA	
MPTE36C	♦GSE	350 - 11
	♦MOTA	
MPTE45	GSE	350 - 12
	♦MOTA	
MPTE45C	♦GSE	350 - 13
	♦MOTA	
MPZ5-16A	♦MOTA	350 - 14
MPZ5-16B	♦MOTA	350 - 15
MPZ5-32A	♦MOTA	350 - 16
MPZ5-32B	♦MOTA	350 - 17
MPZ5-32C	♦MOTA	350 - 18
MPZ5-180A	♦MOTA	350 - 19
MPZ5-180B	♦MOTA	350 - 20
MPZ5-180C	♦MOTA	350 - 21
MQ8/5	SLCB	232 -110
MR1-1000	♦MOTA	401 -213
MR1-1200	♦MOTA	248 -147
MR1-1400	♦MOTA	248 -148
MR1-1600	♦MOTA	248 -158
MR1Z	♦SAKJ	282 -175
MR100	CODI	280 -114
MR200	CODI	280 -214
MR327	♦MOTA	299 - 87
MR328	♦MOTA	299 -105
MR330	♦MOTA	299 -155
MR331	♦MOTA	403 -133
MR400	CODI	281 -119
MR500	ASI	287 -203
	♦MOTA	
MR501	ASI	288 - 45
	♦MOTA	
MR502	ASI	288 -125
	♦MOTA	
MR504	ASI	289 - 4
	♦MOTA	
MR506	ASI	289 - 86
	♦MOTA	
MR508	ASI	289 -155
	♦MOTA	
MR510	ASI	402 -187
	♦MOTA	
MR600	CODI	282 - 9
MR750	♦MOTA	291 -119
MR751	♦MOTA	298 - 18
MR752	♦MOTA	298 - 28
MR754	♦MOTA	298 - 41
MR756	♦MOTA	298 - 49
MR758	♦MOTA	292 -169
MR760	♦MOTA	403 - 14
MR800	CODI	282 - 93
MR800#B	MOTA	239 -215
MR801	MOTA	238 -213
MR802	MOTA	239 -100
MR804	MOTA	239 -194
MR806	MOTA	240 - 48
MR810	♦MOTA	257 -197
MR811	♦MOTA	258 -136
MR812	♦MOTA	259 -133
MR813	♦MOTA	259 -207
MR814	♦MOTA	260 - 92
MR816	♦MOTA	260 -133
MR817	♦MOTA	261 - 79
MR818	♦MOTA	261 -130
MR820	♦FGRS	257 -205
	♦MOTA	
MR821	♦FGRS	258 -151
	♦MOTA	
MR822	♦FGRS	259 -155
	♦MOTA	
MR824	♦FGRS	260 -114
	♦MOTA	
MR826	♦FGRS	261 - 32
	♦MOTA	
MR830	♦MOTA	257 -166
MR831	♦MOTA	258 - 87
MR832	♦MOTA	259 - 85
MR834	♦MOTA	260 - 52
MR836	♦MOTA	260 -182
MR850	♦FGRS	257 -167
	♦MOTA	
MR850Ø	♦FGRS	257 -168
MR851	♦FGRS	258 - 88
	♦MOTA	
MR851Ø	♦FGRS	258 - 89
MR852	♦FGRS	259 - 86
	♦MOTA	
MR852Ø	♦FGRS	259 - 87
MR854	♦FGRS	260 - 53
	♦MOTA	
MR854Ø	♦FGRS	260 - 54
MR856	♦FGRS	260 -183
	♦MOTA	
MR856Ø	♦FGRS	260 -184
MR860	♦MOTA	257 -169
MR861	♦MOTA	258 - 90
MR862	♦MOTA	259 - 88
MR864	♦MOTA	260 - 55
MR866	♦MOTA	260 -185
MR870	♦MOTA	257 -170
MR871	♦MOTA	258 - 91
MR872	♦MOTA	259 - 89
MR874	♦MOTA	260 - 56
MR876	♦MOTA	260 -186
MR910	MOTA	287 -164

TYPE No.	MFRS	Pg&Line
MR911	MOTA	287 -216
MR912	MOTA	288 - 67
MR914	MOTA	288 -169
MR916	MOTA	289 - 33
MR917	MOTA	289 -108
MR918	MOTA	402 -148
MR1000	CODI	402 - 6
MR1001	♦MSC	238 -101
MR1002	♦MSC	238 -170
MR1003	♦MSC	239 - 46
MR1004	♦MSC	239 -152
MR1005	♦MSC	240 - 12
MR1006	♦MSC	240 - 86
MR1007	♦MSC	240 -130
MR1120	♦MOTA	294 -193
MR1121	♦MOTA	295 - 3
MR1122	♦MOTA	295 - 38
MR1123	♦MOTA	295 - 61
MR1124	♦MOTA	295 - 91
MR1125	♦MOTA	295 -110
MR1126	♦MOTA	295 -139
MR1128	♦MOTA	295 -174
MR1130	♦MOTA	403 - 74
MR1200#B	CODI	428 -133
MR1205FL	♦MOTA	302 -184
MR1209FL	♦MOTA	303 - 10
MR1215SL	♦MOTA	306 - 25
MR1219SL	♦MOTA	306 -122
MR1245FL	♦MOTA	310 -216
MR1245SL	♦MOTA	310 -217
MR1249FL	♦MOTA	311 - 34
MR1249SL	♦MOTA	311 - 35
MR1265FL	♦MOTA	311 -196
MR1269FL	♦MOTA	311 -199
MR1366	♦MOTA	260 -187
MR1376	♦MOTA	260 -188
MR1386	♦MOTA	260 -189
MR1396	♦MOTA	260 -190
MR1500	CODI	429 -117
MR1815SL	♦MOTA	306 - 26
MR1819SL	♦MOTA	306 -123
MR2000S	♦MOTA	297 -106
MR2001S	♦MOTA	297 -123
MR2002S	♦MOTA	297 -146
MR2004S	♦MOTA	297 -182
MR2006S	♦MOTA	297 -209
MR2008S	♦MOTA	298 - 7
MR2010S	♦MOTA	403 -119
MR2400	♦MOTA	298 - 66
MR2400F	♦MOTA	257 -202
MR2401	♦MOTA	298 - 68
MR2401F	♦MOTA	258 -148
MR2402	♦MOTA	298 - 70
MR2402F	♦MOTA	259 -154
MR2404	♦MOTA	298 - 78
MR2404F	♦MOTA	260 -113
MR2406	♦MOTA	298 - 80
MR2406F	♦MOTA	261 - 31
MR2500	♦MOTA	298 -126
MR2500M	♦MOTA	298 -127
MR2501	♦MOTA	298 -160
MR2501M	♦MOTA	298 -161
MR2502	♦MOTA	298 -220
MR2502M	♦MOTA	299 - 1
MR2504	♦MOTA	299 - 73
MR2504M	♦MOTA	299 - 74
MR2506	♦MOTA	299 -136
MR2506M	♦MOTA	299 -137
MR2508	♦MOTA	299 -171
MR2508M	♦MOTA	299 -172
MR2510	♦MOTA	403 -144
MR2510M	♦MOTA	403 -145
MR2520L	♦MOTA	326 - 36
MR2525	♦MOTA	298 - 91
MR2525L	♦MOTA	326 - 37
MR2525R	MEHK	298 - 92
	♦MOTA	
MR3001	♦MSC	238 -102
MR3002	♦MSC	238 -171
MR3003	♦MSC	239 - 47
MR3004	♦MSC	239 -153
MR3005	♦MSC	240 - 13
MR3006	♦MSC	240 - 87
MR3007	♦MSC	240 -131
MR5005	♦MOTA	302 -130
MR5010	♦MOTA	302 -145
MR5020	♦MOTA	302 -175
MR5030	♦MOTA	302 -185
MR5040	♦MOTA	302 -210
MR5059	♦MOTA	284 - 10
MR5060	♦MOTA	284 -118
MR5061	♦MOTA	285 - 2
MR-1	SAKJ	282 -197
MR-1C	SAKJ	405 - 69
MRD821	♦CODI	174 - 82
MRD823	♦CODI	174 - 83
MRD825	♦CODI	174 - 84
MRD827	♦CODI	174 - 85
MRD829	♦CODI	174 - 86
MRD921	♦CODI	174 - 87
MRD923	♦CODI	174 - 88
MRD925	♦CODI	174 - 89
MRD927	♦CODI	174 - 90
MRD929	♦CODI	174 - 91
MRF100	CODI	241 - 71
MRF200	CODI	241 - 77
MRF400	CODI	241 - 87
MRF600	CODI	241 - 95
MRF800	CODI	241 -102
MRF1000	CODI	241 -117
MRF1200	CODI	241 -127
MRF1500	CODI	241 -135
MS114	SOD	437 - 1
MS124	SOD	437 - 2

TYPE No.	MFRS	Pg&Line
MS134	SOD	437 - 3
MS214	SOD	437 - 4
MS224	SOD	437 - 5
MS301	SOD	238 - 53
MS302	SOD	238 - 54
MS303	SOD	238 - 38
MS314	SOD	437 - 6
MS324	SOD	437 - 7
MS334	SOD	437 - 8
MS514	SOD	437 - 9
MS524	SOD	437 - 10
MS8111	♦SOD	436 - 59
MS8121	♦SOD	436 - 60
MS8211	♦SOD	436 - 61
MS8221	♦SOD	436 - 62
MS8311	♦SOD	436 - 63
MS9010	♦SOD	436 - 64
MS9020	♦SOD	436 - 65
MS9030	♦SOD	436 - 66
MS9040	♦SOD	436 - 67
MS9070	♦SOD	436 - 68
MSB1	♦MSC	360 -126
MSB2	♦MSC	360 -159
MSB4	♦MSC	360 -194
MSB05	♦MSC	360 - 98
MSB6	♦MSC	361 - 17
MSB8	♦MSC	361 - 44
MSB10	♦MSC	361 - 66
MSD6100	♦MOTA	247 - 47
MSD6101	MOTA	245 -219
	SPR	
MSD6102	♦MOTA	246 - 58
	SPR	
MSD6150	♦MOTA	246 - 59
	SPR	
MSKaB500-445-1.5		364 - 7
	♦SEKG	
MSKaB660-585-1.5		364 - 8
	♦SEKG	
MSKB80-70-1.5		363 - 87
	♦SEKG	
MSKB250-220-1.5		363 -169
	♦SEKG	
MSZ7.5	♦SELI	179 -142
MSZ8.2	♦SELI	181 -121
MSZ9.1	♦SELI	184 -137
MSZ10	♦SELI	186 -199
MT020	MSC	276 -194
MT020A	MSC	276 -174
MT021	♦MSC	276 -136
MT021A	♦MSC	276 -137
MT022	♦MSC	276 -148
MT022A	♦MSC	276 -149
MT023	♦MSC	276 -167
MT023A	♦MSC	276 -168
MT030	♦MSC	276 -199
MT030A	♦MSC	276 -200
MT040	♦MSC	276 -212
MT040A	♦MSC	276 -213
MT050	♦MSC	277 - 23
MT050A	♦MSC	277 - 24
MT060	♦MSC	277 - 34
MT060A	♦MSC	277 - 35
MT070	♦MSC	277 - 52
MT070A	♦MSC	277 - 53
MT080	♦MSC	277 - 57
MT080A	♦MSC	277 - 58
MT090	♦MSC	277 - 69
MT090A	♦MSC	277 - 70
MT100#B	♦MSC	401 - 85
MT100A	♦MSC	401 - 86
MT170	♦MSC	235 -199
MT200	♦MSC	242 -211
MT201	♦MSC	243 - 42
MT202	♦MSC	243 - 87
MT203	♦MSC	243 - 91
MT204	♦MSC	243 - 94
MT205	♦MSC	243 - 96
MT206	♦MSC	243 - 99
MT207	♦MSC	242 -212
MT208	♦MSC	243 - 43
MT209	♦MSC	243 - 88
MT210	♦MSC	243 - 92
MT211	♦MSC	243 - 95
MT212	♦MSC	243 - 97
MT213	♦MSC	243 -100
MT456	♦MSC	236 -198
MT456A	♦MSC	235 - 34
MT457	♦MSC	234 -105
MT457A	♦MSC	235 - 35
MT458	♦MSC	233 -139
MT458A	♦MSC	235 - 36
MT459	♦MSC	232 -180
MT459A	♦MSC	235 - 37
MT461	♦MSC	234 -101
MT461A	♦MSC	235 - 38
MT462	♦MSC	232 -183
MT462A	♦MSC	235 - 39
MT463	♦MSC	232 -175
MT463A	♦MSC	235 - 40
MT464	♦MSC	232 -181
MT464A	♦MSC	235 - 41
MT482	♦MSC	235 - 59
MT482A	♦MSC	235 - 42
MT482B	♦MSC	235 - 43
MT483	♦MSC	235 - 60
MT483A	♦MSC	235 - 44
MT483B	♦MSC	235 - 45
MT484	♦MSC	235 - 61
MT484A	♦MSC	235 - 46
MT484B	♦MSC	235 - 47
MT485	♦MSC	235 - 62
MT485A	♦MSC	235 - 48
MT485B	♦MSC	235 - 49

TYPE No.	MFRS	Pg&Line
MT486	♦MSC	235 - 63
MT486A	♦MSC	235 - 50
MT486B	♦MSC	235 - 51
MT700	MSC	245 -191
MT701	MSC	247 - 48
MT702	MSC	245 -192
MT703	MSC	245 -193
MT704	MSC	245 - 96
MT705	MSC	246 - 30
MT706	MSC	245 - 97
MT707	MSC	245 -204
MT708	MSC	245 -108
MT709	MSC	246 - 1
MT710	MSC	245 -111
MT711	MSC	246 - 6
MT712	MSC	246 -193
MT713	MSC	246 -195
MT714	MSC	246 -198
MT715	MSC	246 -200
MT716	MSC	246 -199
MT717	MSC	246 -201
MT890	♦MSC	234 -106
MT2060	♦MSC	232 - 57
MT2060A	♦MSC	232 - 58
MT2061	♦MSC	232 - 59
MT2061A	♦MSC	232 - 60
MT5010	MSC	236 - 18
MT5011	MSC	236 - 19
MT5050	MSC	236 - 16
MT5051	MSC	236 - 17
MT5100	♦MSC	236 - 20
MT5101	♦MSC	236 - 21
MT5102	♦MSC	236 - 22
MT5103	♦MSC	236 - 23
MT5139	♦MSC	232 - 14
MT5140	♦MSC	232 - 15
MTZ4.7	RHMJ	169 -176
MTZ5.1	RHMJ	171 - 53
MTZ5.6	RHMJ	172 -133
MTZ6.2	RHMJ	174 -145
MTZ6.8	RHMJ	177 -170
MTZ7.5	RHMJ	179 -164
MTZ8.2	RHMJ	181 -145
MTZ9.1	RHMJ	184 -192
MTZ10	RHMJ	187 - 16
MTZ11	RHMJ	188 -181
MTZ12	RHMJ	190 -139
MTZ13	RHMJ	192 -116
MTZ15	RHMJ	194 -140
MTZ16	RHMJ	196 - 45
MTZ18	RHMJ	198 - 48
MTZ20	RHMJ	200 - 50
MTZ22	RHMJ	201 -153
MTZ24	RHMJ	203 - 58
MTZ607,A	MSC	172 -210
MTZ608,A	MSC	175 - 62
MTZ609,A	MSC	177 - 37
MTZ610,A	MSC	178 - 32
MTZ611,A	MSC	180 - 31
MTZ612,A	MSC	182 - 9
MTZ613,A	MSC	185 - 44
MTZ614,A	MSC	187 - 89
MTZ615,A	MSC	189 - 31
MTZ616,A	MSC	190 -202
MTZ617,A	MSC	192 -168
MTZ618,A	MSC	194 -188
MTZ619,A	MSC	196 - 97
MTZ620,A	MSC	198 -101
MTZ621,A	MSC	200 -101
MTZ622,A	MSC	201 -206
MTZ623,A	MSC	203 -103
MTZ624,A	MSC	205 - 35
MTZ625,A	MSC	206 -171
MTZ626,A	MSC	208 - 59
MTZ627,A	MSC	209 -135
MTZ628,A	MSC	210 -171
MTZ629,A	MSC	211 -188
MTZ630,A	MSC	212 -200
MU2	THEF	251 - 35
MU3	THEF	251 - 38
MU4	THEF	251 - 39
MU5	THEF	251 - 42
MU6	THEF	251 - 44
MU8	THEF	251 - 46
MU10	THEF	251 - 51
MU20	THEF	251 - 70
MUR105	♦MOTA	257 -204
MUR110	♦MOTA	258 -150
MUR115	♦MOTA	258 -208
MUR405	♦MOTA	252 - 20
MUR410	♦MOTA	252 -204
MUR415	♦MOTA	253 -172
MUR605CT	♦MOTA	257 -109
MUR610CT	♦MOTA	258 - 14
MUR615CT	♦MOTA	258 -173
MUR620CT	♦MOTA	259 - 7
MUR805	♦MOTA	257 -110
MUR810	♦MOTA	258 - 15
MUR815	♦MOTA	258 -174
MUR820	♦MOTA	259 - 34
MUR830	♦MOTA	259 -168
MUR840	♦MOTA	260 - 5
MUR850	♦MOTA	260 -119
MUR860	♦MOTA	260 -142
MUR870	♦MOTA	261 - 34
MUR880	♦MOTA	261 - 43
MUR890	♦MOTA	261 - 99
MUR1505	♦MOTA	257 -111
MUR1510	♦MOTA	258 - 16
MUR1515	♦MOTA	258 -175
MUR1520	♦MOTA	259 - 35
MUR1530	♦MOTA	259 -169
MUR1540	♦MOTA	260 - 6
MUR1550	♦MOTA	260 -120

Δ-Registered with JEDEC by this manufacturer

♦-Mfr's data sheet available in microfilm service

1. TYPE No. CROSS INDEX

IN TYPE NUMBER SEQUENCE

TYPE No.	MFRS	Pg&Line
MUR1560	♦MOTA	260 -143
MUR1605CT	♦MOTA	257 -112
MUR1610CT	♦MOTA	258 - 17
MUR1615CT	♦MOTA	258 -176
MUR1620CT	♦MOTA	259 - 8
MUR2505	♦MOTA	257 -124
MUR2510	♦MOTA	258 - 31
MUR2515	♦MOTA	258 -190
MUR2520	♦MOTA	259 - 19
MUR3005PT	♦MOTA	272 - 62
MUR3010PT	♦MOTA	272 - 74
MUR3015PT	♦MOTA	272 - 88
MUR3020PT	♦MOTA	272 - 94
MUR5005	♦MOTA	257 -125
MUR5010	♦MOTA	258 - 32
MUR5015	♦MOTA	258 -191
MUR5020	♦MOTA	259 - 20
MUR8100	♦MOTA	261 -104
MUR10005CT	♦MOTA	272 - 64
MUR10010CT	♦MOTA	272 - 76
MUR10015CT	♦MOTA	272 - 90
MUR10020CT	♦MOTA	272 - 96
MUR20005CT	♦MOTA	272 - 65
MUR20010CT	♦MOTA	272 - 77
MUR20015CT	♦MOTA	272 - 91
MUR20020CT	♦MOTA	272 - 97
MV12A	♦SOD	405 -192
MV12B	♦SOD	405 -207
MV12C	♦SOD	405 -220
MV16A	♦SOD	412 - 12
MV16B	♦SOD	412 - 16
MV16C	♦SOD	412 - 22
MV20A	♦SOD	414 -189
MV20B	♦SOD	415 - 8
MV20C	♦SOD	415 - 33
MV24A	♦SOD	416 -204
MV24B	♦SOD	416 -210
MV24C	♦SOD	416 -220
MV28A	♦SOD	418 -150
MV28B	♦SOD	418 -153
MV28C	♦SOD	418 -160
MV32A	♦SOD	420 - 50
MV32B	♦SOD	420 - 53
MV32C	♦SOD	420 - 55
MV36A	♦SOD	420 -220
MV36B	♦SOD	421 - 5
MV36C	♦SOD	421 - 9
MV40A	♦SOD	421 -151
MV40B	♦SOD	421 -168
MV40C	♦SOD	421 -182
MV1401	♦MOTA	445 - 63
MV1403	♦MOTA	445 - 64
MV1404	♦MOTA	445 - 65
MV1405	♦MOTA	445 - 66
MV3102	♦MOTA	445 - 67
MV3103	♦MOTA	445 - 68
MV3140	♦MOTA	445 - 69
MV3141	♦MOTA	445 - 70
MV3142	♦MOTA	445 - 71
MVAM108	♦MOTA	445 - 72
MVAM109	♦MOTA	445 - 73
MVAM115	♦MOTA	445 - 74
MVAM125	♦MOTA	445 - 75
MVS240	♦MOTA	203 -131
MVS460	♦MOTA	208 - 89
MX2130	MSC	259 -176
MX2140	MSC	260 - 14
MX2150	MSC	260 -121
MX2160	MSC	260 -145
MX3105	MSC	257 -141
MX3110	MSC	258 - 50
MX3115	MSC	258 -199
MX3120	MSC	259 - 37
MX3125	MSC	259 -157
MX3130	MSC	259 -177
MX3140	MSC	260 - 15
MX3150	MSC	260 -122
MX3160	MSC	260 -146
MX4105	MSC	257 -142
MX4110	MSC	258 - 51
MX4115	MSC	258 -200
MX4120	MSC	259 - 38
MX4125	MSC	259 -158
MX6105	MSC	257 -153
MX6110	MSC	258 - 64
MX6115	MSC	258 -204
MX6120	MSC	259 - 60
MX6125	MSC	259 -162
MX8105	MSC	257 -154
MX8110	MSC	258 - 65
MX8115	MSC	258 -205
MX8120	MSC	259 - 61
MX8125	MSC	259 -163
MZ2-600	♦AEIL	287 - 93
MZ2-600R	♦AEIL	287 - 94
MZ2-800	♦AEIL	287 -119
MZ2-800R	♦AEIL	287 -120
MZ2-1000	♦AEIL	402 -138
MZ2-1000R	♦AEIL	402 -139
MZ2-1200	♦AEIL	406 -110
MZ2-1200R	♦AEIL	406 -111
MZ6-600	♦AEIL	292 -128
MZ6-800	♦AEIL	292 -178
MZ6-800R	♦AEIL	292 -179
MZ6-1000	♦AEIL	403 - 24
MZ6-1000R	♦AEIL	403 - 25
MZ6-1200	♦AEIL	406 -153
MZ6-1200R	♦AEIL	406 -154
MZ16-600	♦AEIL	297 - 27
MZ16-600R	♦AEIL	297 - 28
MZ16-800	♦AEIL	297 - 42
MZ16-800R	♦AEIL	297 - 43
MZ16-1000	♦AEIL	403 -100
MZ16-1000R	♦AEIL	403 -101
MZ16-1200	♦AEIL	406 -189
MZ16-1200R	♦AEIL	406 -190
MZ41-600	♦AEIL	301 -216
MZ41-600R	♦AEIL	301 -217
MZ41-800	♦AEIL	302 - 28
MZ41-800R	♦AEIL	302 - 29
MZ41-1000	♦AEIL	403 -180
MZ41-1000R	AEIL	403 -181
MZ41-1200	♦AEIL	407 - 33
MZ41-1200R	♦AEIL	407 - 34
MZ71-600	♦AEIL	304 -154
MZ71-600R	♦AEIL	304 -155
MZ71-800	♦AEIL	304 -186
MZ71-800R	♦AEIL	304 -187
MZ71-1000	♦AEIL	404 - 14
MZ71-1000R	♦AEIL	404 - 15
MZ71-1200	♦AEIL	407 - 91
MZ71-1200R	♦AEIL	407 - 92
MZ110	MSC	220 -193
MZ111	MSC	221 -150
MZ112	MSC	222 -106
MZ113	MSC	223 - 57
MZ114	MSC	223 -125
MZ115	MSC	224 - 90
MZ116	MSC	225 - 28
MZ117	MSC	225 - 91
MZ118	MSC	226 - 50
MZ119	MSC	226 -104
MZ120	MSC	227 - 45
MZ122	MSC	227 - 75
MZ124	MSC	227 - 84
MZ126	MSC	227 - 94
MZ127	MSC	227 -108
MZ128	MSC	227 -113
MZ130	MSC	227 -123
MZ132	MSC	227 -132
MZ133	MSC	227 -146
MZ134	MSC	227 -150
MZ136	MSC	227 -159
MZ138	MSC	227 -166
MZ139	MSC	227 -176
MZ140	MSC	227 -189
MZ210	♦MSC	220 -198
MZ211	♦MSC	221 -155
MZ212	♦MSC	222 -112
MZ213	♦MSC	223 - 62
MZ214	♦MSC	223 -130
MZ215	♦MSC	224 - 95
MZ216	♦MSC	225 - 33
MZ217	♦MSC	225 - 94
MZ218	♦MSC	226 - 56
MZ219	♦MSC	226 -107
MZ220	♦MSC	227 - 51
MZ222	♦MSC	227 - 77
MZ224	♦MSC	227 - 86
MZ226	♦MSC	227 - 96
MZ227	MSC	227 -109
MZ228	♦MSC	227 -115
MZ230	♦MSC	227 -126
MZ232	♦MSC	227 -134
MZ233	MSC	227 -147
MZ234	♦MSC	227 -152
MZ236	♦MSC	227 -161
MZ238	♦MSC	227 -168
MZ239	MSC	227 -177
MZ240	♦MSC	227 -191
MZ303,A,B,C	MITJ	165 -107
MZ304,A,B,C	MITJ	168 - 86
MZ305,A,B,C	MITJ	171 - 7
MZ306,A,B,C	MITJ	174 - 1
MZ307,A,B,C	MITJ	179 - 21
MZ308,A,B,C	MITJ	181 - 80
MZ309,A,B,C	MITJ	184 - 86
MZ310	MSC	221 - 5
MZ310,A,B,C	MITJ	187 - 90
MZ311	MSC	221 -159
MZ312	MSC	222 -116
MZ312,A,B,C	MITJ	190 -203
MZ313	MSC	223 - 66
MZ314	MSC	223 -134
MZ314,A,B,C	MITJ	193 -188
MZ315	MSC	224 - 99
MZ316	MSC	225 - 37
MZ316,A,B,C	MITJ	196 - 98
MZ317	MSC	225 - 97
MZ318	MSC	226 - 60
MZ318,A,B	MITJ	198 -102
MZ319	MSC	226 -110
MZ320	MSC	227 - 55
MZ320,A,B	MITJ	200 -102
MZ322	MSC	227 - 80
MZ322,A,B	MITJ	201 -207
MZ324	MSC	227 - 88
MZ324,A,B	MITJ	203 -104
MZ326	MSC	227 - 98
MZ327	MSC	227 -110
MZ327,A,B	MITJ	205 - 36
MZ328	MSC	227 -117
MZ330	MSC	227 -129
MZ330,A,B	MITJ	206 -172
MZ332	MSC	227 -136
MZ333	MSC	227 -148
MZ333,A,B	MITJ	208 - 60
MZ334	MSC	227 -154
MZ336	MSC	227 -163
MZ336,A,B	MITJ	209 -136
MZ338	MSC	227 -170
MZ339	MSC	227 -178
MZ339,A,B	MITJ	210 -172
MZ340	MSC	227 -193
MZ343,A,B	MITJ	211 -189
MZ406,A,B,C	MITJ	174 - 18
MZ407,A,B,C	MITJ	179 - 22
MZ408,A,B,C	MITJ	181 - 84
MZ409,A,B,C	MITJ	184 - 94
MZ410,A,B,C	MITJ	187 -179
MZ412,A,B,C	MITJ	191 - 60
MZ414,A,B,C	MITJ	194 - 7
MZ416,A,B,C	MITJ	196 -153
MZ418,A,B	MITJ	198 -169
MZ420,A,B	MITJ	200 -161
MZ422,A,B	MITJ	202 - 61
MZ424,A,B	MITJ	203 -159
MZ605	♦MOTA	174 - 73
MZ610	♦MOTA	174 - 74
MZ620	♦MOTA	174 - 75
MZ640	♦MOTA	174 - 76
MZ706	MSC	178 -189
MZ707	MSC	180 -182
MZ708	MSC	182 -172
MZ709	MSC	186 - 3
MZ710	MSC	188 - 72
MZ711	MSC	189 -185
MZ712	MSC	191 -160
MZ713	MSC	193 -101
MZ714	MSC	194 - 40
MZ715	MSC	195 -156
MZ716	MSC	197 - 35
MZ718	MSC	199 - 55
MZ720	MSC	201 - 48
MZ722	MSC	202 -154
MZ724	MSC	204 - 41
MZ727	MSC	205 -196
MZ730	MSC	207 -121
MZ733	MSC	209 - 7
MZ736	MSC	210 - 61
MZ739	MSC	211 - 98
MZ740	MSC	211 -127
MZ743	MSC	212 -109
MZ745	MSC	212 -139
MZ747	MSC	213 -126
MZ750	MSC	213 -162
MZ751	MSC	214 -121
MZ756	MSC	215 -110
MZ760	MSC	215 -156
MZ762	MSC	216 -114
MZ768	MSC	217 - 95
MZ770	MSC	217 -117
MZ775	MSC	218 - 78
MZ780	MSC	218 -106
MZ782	MSC	219 - 52
MZ790	MSC	219 - 97
MZ791	MSC	220 - 31
MZ806	♦MSC	178 -194
MZ807	♦MSC	180 -188
MZ808	♦MSC	182 -178
MZ809	♦MSC	186 - 9
MZ810#B	♦MSC	188 - 78
MZ811	MSC	189 -189
MZ812	♦MSC	191 -166
MZ813	♦MSC	193 -106
MZ814	♦MSC	194 - 45
MZ815	♦MSC	195 -162
MZ816	♦MSC	197 - 38
MZ818	♦MSC	199 - 62
MZ820#B	♦MSC	201 - 55
MZ822	♦MSC	202 -159
MZ824	♦MSC	204 - 47
MZ827	♦MSC	205 -203
MZ830	♦MSC	207 -127
MZ833	♦MSC	209 - 14
MZ836	♦MSC	210 - 68
MZ839	MSC	211 -102
MZ840#B	♦MSC	211 -130
MZ843	MSC	212 -113
MZ845	♦MSC	212 -144
MZ847	MSC	213 -130
MZ850	♦MSC	213 -167
MZ851	MSC	214 -125
MZ856	♦MSC	215 -115
MZ860	♦MSC	215 -159
MZ862	MSC	216 -118
MZ868	MSC	217 - 99
MZ870	♦MSC	217 -119
MZ875	♦MSC	218 - 83
MZ880	♦MSC	218 -108
MZ882	MSC	219 - 56
MZ890	♦MSC	219 -100
MZ891	MSC	220 - 35
MZ906	MSC	178 -198
MZ907	MSC	180 -192
MZ908	MSC	182 -182
MZ909	MSC	186 - 13
MZ910	MSC	188 - 82
MZ911	MSC	189 -192
MZ912	MSC	191 -170
MZ913	MSC	193 -110
MZ914	MSC	194 - 49
MZ915	MSC	195 -166
MZ916	MSC	197 - 41
MZ918	MSC	199 - 66
MZ920	MSC	201 - 59
MZ922	MSC	202 -163
MZ924	MSC	204 - 51
MZ927	MSC	206 - 1
MZ930	MSC	207 -131
MZ933	MSC	209 - 18
MZ936	MSC	210 - 72
MZ939	MSC	211 -105
MZ940	MSC	211 -132
MZ943	MSC	212 -116
MZ945	MSC	212 -147
MZ947	MSC	213 -133
MZ950	MSC	213 -170
MZ951	MSC	214 -128
MZ956	MSC	215 -119
MZ960	MSC	215 -161
MZ962	MSC	216 -121
MZ968	MSC	217 -102
MZ970	MSC	217 -121
MZ975	MSC	218 - 87
MZ980	MSC	218 -110
MZ982	MSC	219 - 59
MZ990	MSC	219 -102
MZ991	MSC	220 - 38
MZ2360	♦MOTA	163 - 24
MZ2361	♦MOTA	163 - 69
MZ4678	♦MOTA	163 -102
MZ5110	MSC	395 -122
MZ5111	MSC	396 - 56
MZ5112	MSC	396 -142
MZ5113	MSC	397 - 31
MZ5114	MSC	397 -115
MZ5115	MSC	397 -168
MZ5116	MSC	398 - 58
MZ5117	MSC	398 -128
MZ5118	MSC	398 -171
MZ5119	MSC	399 - 53
MZ5120	MSC	399 - 80
MZ5122	MSC	399 -146
MZ5124	MSC	399 -157
MZ5126	MSC	399 -166
MZ5128	MSC	399 -177
MZ5130	MSC	399 -184
MZ5132	MSC	399 -193
MZ5134	MSC	400 - 5
MZ5136	MSC	400 - 12
MZ5138	MSC	400 - 19
MZ5140	MSC	400 - 28
MZ5210	♦MSC	395 -133
MZ5211	♦MSC	396 - 62
MZ5212	♦MSC	396 -149
MZ5213	♦MSC	397 - 38
MZ5214	♦MSC	397 -121
MZ5215	♦MSC	397 -175
MZ5216	♦MSC	398 - 65
MZ5217	♦MSC	398 -131
MZ5218	♦MSC	398 -178
MZ5219	♦MSC	399 - 56
MZ5220	♦MSC	399 - 86
MZ5222	♦MSC	399 -149
MZ5224	♦MSC	399 -159
MZ5226	♦MSC	399 -168
MZ5227	♦MSC	399 -173
MZ5228	♦MSC	399 -179
MZ5230	♦MSC	399 -187
MZ5232	♦MSC	399 -195
MZ5233	♦MSC	400 - 3
MZ5234	♦MSC	400 - 7
MZ5236	♦MSC	400 - 14
MZ5238	♦MSC	400 - 21
MZ5239	♦MSC	400 - 26
MZ5240	♦MSC	400 - 30
MZ5310	MSC	395 -141
MZ5311	MSC	396 - 68
MZ5312	MSC	396 -155
MZ5313	MSC	397 - 44
MZ5314	MSC	397 -125
MZ5315	MSC	397 -181
MZ5316	MSC	398 - 70
MZ5317	MSC	398 -134
MZ5318	MSC	398 -184
MZ5319	MSC	399 - 59
MZ5320	MSC	399 - 92
MZ5322	MSC	399 -152
MZ5324	MSC	399 -161
MZ5326	MSC	399 -170
MZ5328	MSC	399 -181
MZ5330	MSC	399 -190
MZ5332	MSC	399 -197
MZ5334	MSC	400 - 9
MZ5336	MSC	400 - 16
MZ5338	MSC	400 - 23
MZ5340	MSC	400 - 32
MZ5706	MSC	379 - 18
MZ5707	MSC	379 -130
MZ5708	MSC	380 - 51
MZ5709	MSC	380 -179
MZ5710	MSC	381 - 78
MZ5712	MSC	382 - 86
MZ5713	MSC	383 - 3
MZ5714	MSC	383 - 99
MZ5715	MSC	383 -166
MZ5716	MSC	384 - 79
MZ5718	MSC	385 - 32
MZ5720	MSC	385 -186
MZ5722	MSC	386 - 91
MZ5724	MSC	387 - 7
MZ5727	MSC	387 -145
MZ5730	MSC	388 - 65
MZ5733	MSC	388 -170
MZ5736	MSC	389 - 84
MZ5740	MSC	390 - 66
MZ5745	MSC	390 -176
MZ5750	MSC	391 -116
MZ5756	MSC	392 - 77
MZ5760	MSC	392 -167
MZ5770	MSC	393 -170
MZ5775	MSC	394 - 6
MZ5780	MSC	394 - 93
MZ5790	MSC	395 - 5
MZ5806	♦MSC	379 - 27
MZ5807	♦MSC	379 -140
MZ5808	♦MSC	380 - 62
MZ5809	♦MSC	380 -190
MZ5810	♦MSC	381 - 88
MZ5811	♦MSC	381 -193
MZ5812	♦MSC	382 - 97
MZ5813	♦MSC	383 - 13
MZ5814	♦MSC	383 -106
MZ5815	♦MSC	383 -177
MZ5816	♦MSC	384 - 86
MZ5818	♦MSC	385 - 43
MZ5820	♦MSC	385 -197
MZ5822	♦MSC	386 -101
MZ5824	♦MSC	387 - 18
MZ5827	♦MSC	387 -156
MZ5830	♦MSC	388 - 76
MZ5833	♦MSC	388 -181
MZ5836	♦MSC	389 - 95
MZ5839	♦MSC	390 - 63
MZ5840	♦MSC	390 - 70
MZ5843	♦MSC	390 -105
MZ5845	♦MSC	390 -183
MZ5847	♦MSC	391 - 37
MZ5850	♦MSC	391 -122
MZ5851	♦MSC	391 -175
MZ5856	♦MSC	392 - 87
MZ5860	♦MSC	392 -172
MZ5862	♦MSC	216 - 8
MZ5868	♦MSC	393 - 99
MZ5870	♦MSC	393 -173
MZ5875	♦MSC	394 - 16
MZ5880	♦MSC	394 - 96
MZ5882	♦MSC	394 -127
MZ5890	♦MSC	395 - 8
MZ5891	♦MSC	395 - 38
MZ5906	MSC	379 - 32
MZ5907	MSC	379 -146
MZ5908	MSC	380 - 69
MZ5909	MSC	380 -196
MZ5910	MSC	381 - 94
MZ5912	MSC	382 -103
MZ5913	MSC	383 - 19
MZ5914	MSC	383 -110
MZ5915	MSC	383 -184
MZ5916	MSC	384 - 92
MZ5918	MSC	385 - 50
MZ5920	MSC	386 - 3
MZ5922	MSC	386 -108
MZ5924	MSC	387 - 25
MZ5927	MSC	387 -164
MZ5930	MSC	388 - 83
MZ5933	MSC	388 -189
MZ5936	MSC	389 -102
MZ5940	MSC	390 - 73
MZ5945	MSC	390 -187
MZ5950	MSC	391 -125
MZ5956	MSC	392 - 94
MZ5960	MSC	392 -176
MZ5970	MSC	393 -175
MZ5975	MSC	394 - 22
MZ5980	MSC	394 - 98
MZ5990	MSC	395 - 10
MZA205	MITJ	172 - 38
MZC2.5A10	♦MOTA	164 - 95
MZL306	MITJ	173 -205
MZL307	MITJ	179 - 20
MZL308	MITJ	181 - 77
MZL309	MITJ	184 - 36
MZL310	MITJ	187 - 57
MZL312	MITJ	190 -171
MZL314	MITJ	193 -181
MZL316	MITJ	196 - 69
MZL318	MITJ	198 - 74
MZL320	MITJ	200 - 72
MZL322	MITJ	201 -178
MZL324	MITJ	203 - 79
MZL327	MITJ	205 - 12
MZL330	MITJ	206 -147
MZL333	MITJ	208 - 35
MZL336	MITJ	209 -116
MZL339	MITJ	210 -153
MZL343	MITJ	211 -173
MZT2970	♦MOTA	379 - 69
MZT2970A	♦MOTA	379 - 62
MZT2970B	♦MOTA	379 - 50
MZT2971	♦MOTA	379 -200
MZT2971A	♦MOTA	379 -194
MZT2971B	♦MOTA	379 -183
MZT2972	♦MOTA	380 -109
MZT2972A	♦MOTA	380 -102
MZT2972B	♦MOTA	380 - 90
MZT2973	♦MOTA	381 - 33
MZT2973A	♦MOTA	381 - 22
MZT2973B	♦MOTA	381 - 10
MZT2974	♦MOTA	381 -140
MZT2974A	♦MOTA	381 -132
MZT2974B	♦MOTA	381 -117
MZT2975	♦MOTA	382 - 28
MZT2975A	♦MOTA	382 - 21
MZT2975B	♦MOTA	382 - 8
MZT2976	♦MOTA	382 -150
MZT2976A	♦MOTA	382 -142
MZT2976B	♦MOTA	382 -125
MZT2977	♦MOTA	383 - 57
MZT2977A	♦MOTA	383 - 49
MZT2977B	♦MOTA	383 - 35
MZT2978	♦MOTA	383 -133
MZT2978A	♦MOTA	383 -127
MZT2978B	♦MOTA	383 -120
MZT2979	♦MOTA	384 - 35
MZT2979A	♦MOTA	384 - 27
MZT2979B	♦MOTA	384 - 9
MZT2980	♦MOTA	384 -132
MZT2980A	♦MOTA	384 -124
MZT2980B	♦MOTA	384 -108
MZT2982	♦MOTA	385 - 98
MZT2982A	♦MOTA	385 - 90
MZT2982B	♦MOTA	385 - 72
MZT2983	♦MOTA	385 -159
MZT2983A	♦MOTA	385 -156
MZT2983B	♦MOTA	385 -151
MZT2984	♦MOTA	386 - 45
MZT2984A	♦MOTA	386 - 37
MZT2984B	♦MOTA	386 - 22

Δ-Registered with JEDEC by this manufacturer

♦-Mfr's data sheet available in microfilm service

1. TYPE No. CROSS INDEX

IN TYPE NUMBER SEQUENCE

TYPE No.	MFRS	Pg&Line
MZT2985	♦MOTA	386 -152
MZT2985A	♦MOTA	386 -144
MZT2985B	♦MOTA	386 -127
MZT2986	♦MOTA	387 - 67
MZT2986A	♦MOTA	387 - 59
MZT2986B	♦MOTA	387 - 43
MZT2988	♦MOTA	388 - 9
MZT2988A	♦MOTA	388 - 1
MZT2988B	♦MOTA	387 -185
MZT2989	♦MOTA	388 -125
MZT2989A	♦MOTA	388 -117
MZT2989B	♦MOTA	388 -103
MZT2990	♦MOTA	389 - 34
MZT2990A	♦MOTA	389 - 26
MZT2990B	♦MOTA	389 - 9
MZT2991	♦MOTA	389 -143
MZT2991A	♦MOTA	389 -135
MZT2991B	♦MOTA	389 -120
MZT2992	♦MOTA	390 - 35
MZT2992A	♦MOTA	390 - 28
MZT2992B	♦MOTA	390 - 13
MZT2993	♦MOTA	390 -142
MZT2993A	♦MOTA	390 -135
MZT2993B	♦MOTA	390 -121
MZT2995	♦MOTA	391 - 77
MZT2995A	♦MOTA	391 - 70
MZT2995B	♦MOTA	391 - 55
MZT2996	♦MOTA	391 -142
MZT2996A	♦MOTA	391 -137
MZT2996B	♦MOTA	391 -132
MZT2997	♦MOTA	392 - 8
MZT2997A	♦MOTA	392 - 1
MZT2997B	♦MOTA	391 -191
MZT2998	♦MOTA	392 - 52
MZT2998A	♦MOTA	392 - 49
MZT2998B	♦MOTA	392 - 45
MZT2999	♦MOTA	392 -135
MZT2999A	♦MOTA	392 -127
MZT2999B	♦MOTA	392 -111
MZT3000	♦MOTA	393 - 47
MZT3000A	♦MOTA	393 - 40
MZT3000B	♦MOTA	393 - 26
MZT3001	♦MOTA	393 -141
MZT3001A	♦MOTA	393 -134
MZT3001B	♦MOTA	393 -119
MZT3002	♦MOTA	394 - 62
MZT3002A	♦MOTA	394 - 54
MZT3002B	♦MOTA	394 - 39
MZT3003	♦MOTA	394 -167
MZT3003A	♦MOTA	394 -161
MZT3003B	♦MOTA	394 -146
MZT3004	♦MOTA	395 - 76
MZT3004A	♦MOTA	395 - 69
MZT3004B	♦MOTA	395 - 55
MZT3005	♦MOTA	395 -185
MZT3005A	♦MOTA	395 -178
MZT3005B	♦MOTA	395 -162
MZT3006	♦MOTA	396 - 33
MZT3006A	♦MOTA	396 - 30
MZT3006B	♦MOTA	396 - 26
MZT3007	♦MOTA	396 -103
MZT3007A	♦MOTA	396 - 96
MZT3007B	♦MOTA	396 - 82
MZT3008	♦MOTA	396 -190
MZT3008A	♦MOTA	396 -183
MZT3008B	♦MOTA	396 -169
MZT3009	♦MOTA	397 - 79
MZT3009A	♦MOTA	397 - 72
MZT3009B	♦MOTA	397 - 58
MZT3010	♦MOTA	397 -143
MZT3010A	♦MOTA	397 -138
MZT3010B	♦MOTA	397 -132
MZT3011	♦MOTA	398 - 22
MZT3011A	♦MOTA	398 - 15
MZT3011B	♦MOTA	398 - 1
MZT3012	♦MOTA	398 - 99
MZT3012A	♦MOTA	398 - 92
MZT3012B	♦MOTA	398 - 82
MZT3014	♦MOTA	399 - 25
MZT3014A	♦MOTA	399 - 18
MZT3014B	♦MOTA	399 - 7
MZT3015	♦MOTA	399 -121
MZT3015A	♦MOTA	399 -114
MZT3015B	♦MOTA	399 -104
MZT3305	♦MOTA	379 - 97
MZT3305A	♦MOTA	379 - 92
MZT3305B	♦MOTA	379 - 87
MZT3306	♦MOTA	380 - 20
MZT3306A	♦MOTA	380 - 15
MZT3306B	♦MOTA	380 - 10
MZT3307	♦MOTA	380 -131
MZT3307A	♦MOTA	380 -128
MZT3307B	♦MOTA	380 -125
MZT3308	♦MOTA	381 - 54
MZT3308A	♦MOTA	381 - 51
MZT3308B	♦MOTA	381 - 48
MZT3309	♦MOTA	381 -162
MZT3309A	♦MOTA	381 -159
MZT3309B	♦MOTA	381 -156
MZT3310	♦MOTA	382 - 50
MZT3310A	♦MOTA	382 - 47
MZT3310B	♦MOTA	382 - 44
MZT3311	♦MOTA	382 -173
MZT3311A	♦MOTA	382 -170
MZT3311B	♦MOTA	382 -167
MZT3312	♦MOTA	383 - 80
MZT3312A	♦MOTA	383 - 77
MZT3312B	♦MOTA	383 - 74
MZT3313	♦MOTA	383 -150
MZT3313A	♦MOTA	383 -147
MZT3313B	♦MOTA	383 -144
MZT3314	♦MOTA	384 - 59
MZT3314A	♦MOTA	384 - 56
MZT3314B	♦MOTA	384 - 53

TYPE No.	MFRS	Pg&Line
MZT3315	♦MOTA	384 -156
MZT3315A	♦MOTA	384 -153
MZT3315B	♦MOTA	384 -150
MZT3316	♦MOTA	385 - 13
MZT3316A	♦MOTA	385 - 10
MZT3316B	♦MOTA	385 - 7
MZT3317	♦MOTA	385 -121
MZT3317A	♦MOTA	385 -118
MZT3317B	♦MOTA	385 -115
MZT3318	♦MOTA	385 -169
MZT3318A	♦MOTA	385 -166
MZT3318B	♦MOTA	385 -163
MZT3319	♦MOTA	386 - 68
MZT3319A	♦MOTA	386 - 65
MZT3319B	♦MOTA	386 - 62
MZT3320	♦MOTA	386 -175
MZT3320A	♦MOTA	386 -172
MZT3320B	♦MOTA	386 -169
MZT3321	♦MOTA	387 - 88
MZT3321A	♦MOTA	387 - 85
MZT3321B	♦MOTA	387 - 82
MZT3322	♦MOTA	387 -130
MZT3322A	♦MOTA	387 -127
MZT3322B	♦MOTA	387 -124
MZT3323	♦MOTA	388 - 30
MZT3323A	♦MOTA	388 - 27
MZT3323B	♦MOTA	388 - 24
MZT3324	♦MOTA	388 -146
MZT3324A	♦MOTA	388 -143
MZT3324B	♦MOTA	388 -140
MZT3325	♦MOTA	389 - 55
MZT3325A	♦MOTA	389 - 52
MZT3325B	♦MOTA	389 - 49
MZT3326	♦MOTA	389 -164
MZT3326A	♦MOTA	389 -161
MZT3326B	♦MOTA	389 -158
MZT3327	♦MOTA	390 - 55
MZT3327A	♦MOTA	390 - 52
MZT3327B	♦MOTA	390 - 49
MZT3328	♦MOTA	390 -161
MZT3328A	♦MOTA	390 -158
MZT3328B	♦MOTA	390 -155
MZT3329	♦MOTA	391 - 14
MZT3329A	♦MOTA	391 - 11
MZT3329B	♦MOTA	391 - 8
MZT3330	♦MOTA	391 - 97
MZT3330A	♦MOTA	391 - 94
MZT3330B	♦MOTA	391 - 91
MZT3331	♦MOTA	391 -153
MZT3331A	♦MOTA	391 -150
MZT3331B	♦MOTA	391 -147
MZT3332	♦MOTA	392 - 27
MZT3332A	♦MOTA	392 - 24
MZT3332B	♦MOTA	392 - 21
MZT3333	♦MOTA	392 - 59
MZT3333A	♦MOTA	392 - 57
MZT3333B	♦MOTA	392 - 55
MZT3334	♦MOTA	392 -154
MZT3334A	♦MOTA	392 -151
MZT3334B	♦MOTA	392 -148
MZT3335	♦MOTA	393 - 67
MZT3335A	♦MOTA	393 - 64
MZT3335B	♦MOTA	393 - 61
MZT3336	♦MOTA	393 -161
MZT3336A	♦MOTA	393 -158
MZT3336B	♦MOTA	393 -155
MZT3337	♦MOTA	394 - 83
MZT3337A	♦MOTA	394 - 80
MZT3337B	♦MOTA	394 - 77
MZT3338	♦MOTA	394 -186
MZT3338A	♦MOTA	394 -183
MZT3338B	♦MOTA	394 -180
MZT3339	♦MOTA	395 - 95
MZT3339A	♦MOTA	395 - 92
MZT3339B	♦MOTA	395 - 89
MZT3340	♦MOTA	396 - 7
MZT3340A	♦MOTA	396 - 4
MZT3340B	♦MOTA	396 - 1
MZT3341	♦MOTA	396 - 44
MZT3341A	♦MOTA	396 - 41
MZT3341B	♦MOTA	396 - 38
MZT3342	♦MOTA	396 -122
MZT3342A	♦MOTA	396 -119
MZT3342B	♦MOTA	396 -116
MZT3343	♦MOTA	397 - 12
MZT3343A	♦MOTA	397 - 9
MZT3343B	♦MOTA	397 - 6
MZT3344	♦MOTA	397 - 98
MZT3344A	♦MOTA	397 - 95
MZT3344B	♦MOTA	397 - 92
MZT3345	♦MOTA	397 -155
MZT3345A	♦MOTA	397 -153
MZT3345B	♦MOTA	397 -151
MZT3346	♦MOTA	398 - 41
MZT3346A	♦MOTA	398 - 38
MZT3346B	♦MOTA	398 - 35
MZT3347	♦MOTA	398 -118
MZT3347A	♦MOTA	398 -115
MZT3347B	♦MOTA	398 -112
MZT3348	♦MOTA	398 -160
MZT3348A	♦MOTA	398 -158
MZT3348B	♦MOTA	398 -156
MZT3349	♦MOTA	399 - 44
MZT3349A	♦MOTA	399 - 41
MZT3349B	♦MOTA	399 - 38
MZT3350	♦MOTA	399 -139
MZT3350A	♦MOTA	399 -136
MZT3350B	♦MOTA	399 -133
MZT4549	♦MOTA	377 -125
MZT4549A	♦MOTA	377 -122
MZT4549B	♦MOTA	377 -119
MZT4550	♦MOTA	378 - 1
MZT4550A	♦MOTA	377 -160
MZT4550B	♦MOTA	377 -157

TYPE No.	MFRS	Pg&Line
MZT4551	♦MOTA	378 - 46
MZT4551A	♦MOTA	378 - 43
MZT4551B	♦MOTA	378 - 40
MZT4552	♦MOTA	378 - 89
MZT4552A	♦MOTA	378 - 86
MZT4552B	♦MOTA	378 - 83
MZT4553	♦MOTA	378 -136
MZT4553A	♦MOTA	378 -133
MZT4553B	♦MOTA	378 -130
MZT4554	♦MOTA	378 -190
MZT4554A	♦MOTA	378 -187
MZT4554B	♦MOTA	378 -184
N03C	♦HITJ	302 -181
N03E	♦HITJ	302 -215
N03G	♦HITJ	303 - 14
N03J	♦HITJ	403 -201
N04C	♦HITJ	302 -182
N04E	♦HITJ	302 -216
N04G	♦HITJ	303 - 15
N04J	♦HITJ	403 -202
N19C	♦HITJ	302 -158
N19E	♦HITJ	302 -194
N19G	♦HITJ	303 - 2
N19J	♦HITJ	303 - 16
N20C	♦HITJ	302 -159
N20E	♦HITJ	302 -195
N20G	♦HITJ	303 - 3
N20J	♦HITJ	303 - 17
NBS12-50	♦DII	368 -109
NBS12-100	♦DII	368 -118
NBS12-200	♦DII	368 -134
NBS12-300	♦DII	368 -144
NBS12-400	♦DII	368 -154
NBS12-600	♦DII	368 -169
NBS12-800	♦DII	368 -182
NBS12-1000	♦DII	368 -188
NBS25-50	♦DII	369 -186
NBS25-100	♦DII	369 -209
NBS25-200	♦DII	370 - 19
NBS25-300	♦DII	370 - 38
NBS25-400	♦DII	370 - 56
NBS25-600	♦DII	370 - 91
NBS25-800	♦DII	370 -113
NBS25-1000	♦DII	370 -130
NBS30-50	♦DII	370 -152
NBS30-100	♦DII	370 -160
NBS30-200	♦DII	370 -173
NBS30-300	♦DII	370 -182
NBS30-400	♦DII	370 -191
NBS30-600	♦DII	370 -210
NBS30-800	♦DII	370 -220
NBS30-1000	♦DII	371 - 3
NC4V7	FERB	169 -149
NC5V1	FERB	171 - 29
NC5V6	FERB	172 - 95
NC6V2	FERB	174 - 77
NC6V8	FERB	177 -134
NC7V5	FERB	179 -133
NC8V2	FERB	181 -105
NC9V1	FERB	184 -127
NC10	FERB	186 -177
NC11	FERB	188 -154
NC12	FERB	190 - 98
NC13	FERB	192 - 93
NC15	FERB	194 -107
NC16	FERB	196 - 23
NC18	FERB	198 - 15
NC20	FERB	200 - 28
NC22	FERB	201 -120
NC24	FERB	203 - 40
NC27	FERB	204 -172
NC30	FERB	206 -111
NC33	FERB	207 -192
NC36	FERB	209 - 85
NC39	FERB	210 -121
NC43	FERB	211 -149
NC47	FERB	212 -155
NCR20-50	♦DII	297 -101
NCR20-100	♦DII	297 -116
NCR20-200	♦DII	297 -138
NCR20-300	♦DII	297 -152
NCR20-400	♦DII	297 -164
NCR20-600	♦DII	297 - 87
NCR20-800	♦DII	297 -216
NCR20-1000	♦DII	403 -111
NCR35-50	♦DII	300 -198
NCR35-100	♦DII	300 -208
NCR35-200	♦DII	301 - 1
NCR35-300	♦DII	301 - 9
NCR35-400	♦DII	301 - 17
NCR35-600	♦DII	301 - 29
ND2V7	FERB	164 -129
ND3V0	FERB	165 - 53
ND3V3	FERB	165 -181
ND3V6	FERB	166 -154
ND3V9	FERB	167 -114
ND4V3	FERB	168 -126
ND10	CODI	232 -161
ND10A	CODI	232 -162
ND20	CODI	232 -163
ND20A	CODI	232 -164
ND30	CODI	232 -165
ND30A	CODI	232 -166
ND40	CODI	232 -167
ND40A	CODI	232 -168
NKV3F	♦CSD	419 - 63
NKV6F	♦CSD	424 -134
NKV10F	♦CSD	427 - 25
NKV12F	♦CSD	428 - 41
NKV15F	♦CSD	429 - 20
NKV20F	♦CSD	430 -100
NLA390A	NAT	310 -196
NLA390B	NAT	310 -209
NLA390C	NAT	310 -215

TYPE No.	MFRS	Pg&Line
NLA390D	NAT	311 - 10
NLA390E	NAT	311 - 17
NLA390M	NAT	311 - 32
NLA390N	NAT	311 - 53
NLA390P	NAT	404 -191
NLA390PA	NAT	405 -143
NLA390PB	NAT	408 - 71
NLA390PC	NAT	409 - 23
NLA390PD	NAT	410 -104
NLA390PE	NAT	411 -197
NLA390S	NAT	311 - 39
NLA390T	NAT	311 - 58
NLA397A	NAT	310 -192
NLA397B	NAT	310 -198
NLA397C	NAT	310 -212
NLA397D	NAT	310 -219
NLA397E	NAT	311 - 13
NLA397M	NAT	311 - 21
NLA397N	NAT	311 - 43
NLA397P	NAT	404 -181
NLA397PA	NAT	405 -141
NLA397PB	NAT	408 - 60
NLA397PC	NAT	409 - 21
NLA397PD	NAT	410 - 95
NLA397PE	NAT	411 -193
NLA397S	NAT	311 - 37
NLA397T	NAT	311 - 56
NLA430A	NAT	312 - 85
NLA430B	NAT	312 - 90
NLA430C	NAT	312 - 94
NLA430D	NAT	312 - 98
NLA430E	NAT	312 -102
NLA430M	NAT	312 -107
NLA430N	NAT	312 -116
NLA430P	NAT	405 - 20
NLA430PA	NAT	405 -167
NLA430PB	NAT	408 -133
NLA430PC	NAT	409 - 36
NLA430PD	NAT	410 -164
NLA430PE	NAT	411 -213
NLA430S	NAT	312 -111
NLA430T	NAT	312 -120
NLA540L	NAT	415 -203
NLA540LA	NAT	416 - 45
NLA540LB	NAT	416 -126
NLA540LC	NAT	416 -182
NLA540LD	NAT	417 - 61
NLA540PM	NAT	413 -106
NLA540PN	NAT	414 -102
NLA540PS	NAT	413 -171
NLA540PT	NAT	414 -153
NS1000	SOD	279 -205
NS1001	SOD	280 - 46
NS1002	SOD	280 -134
NS1003	SOD	281 - 6
NS1004	SOD	281 - 39
NS1005	SOD	281 -130
NS1006	SOD	281 -157
NS1007	SOD	282 - 15
NS1008	SOD	282 - 29
NS2000	SOD	285 -197
NS2001	SOD	286 - 7
NS2002	SOD	286 - 44
NS2003	SOD	286 - 82
NS2004	SOD	286 - 96
NS2005	SOD	286 -130
NS2006	SOD	286 -145
NS2007	SOD	286 -176
NS2008	SOD	286 -185
NS3000	SOD	287 -165
NS3001	SOD	287 -217
NS3002	SOD	288 - 68
NS3003	SOD	288 -138
NS3004	SOD	288 -170
NS3005	SOD	289 - 14
NS3006	SOD	289 - 34
NS3007	SOD	289 - 95
NS3008	SOD	289 -109
NS6000	SOD	291 -101
NS6001	SOD	291 -143
NS6002	SOD	291 -194
NS6003	SOD	292 - 12
NS6004	SOD	292 - 41
NS6005	SOD	292 - 79
NS6006	SOD	292 -100
NS6007	SOD	292 -139
NS6008	SOD	292 -152
NS10000	SOD	262 -141
NS10001	SOD	262 -153
NS10002	SOD	262 -166
NS10004	SOD	262 -177
NS10006	SOD	262 -188
NS10008	SOD	262 -199
NS12000	SOD	262 -142
NS12001	SOD	262 -154
NS12002	SOD	262 -167
NS12004	SOD	262 -178
NS12006	SOD	262 -189
NS12008	SOD	262 -200
NS15000	♦SOD	262 -143
NS15001	♦SOD	262 -155
NS15002	♦SOD	262 -168
NS15004	♦SOD	262 -179
NS15006	♦SOD	262 -190
NS15008	♦SOD	262 -201
NS20000	SOD	262 -144
NS20001	SOD	262 -156
NS20002	SOD	262 -169
NS20004	SOD	262 -180
NS20006	SOD	262 -191
NS20008	SOD	262 -202
NS22000	SOD	262 -145
NS22001	SOD	262 -157
NS22002	SOD	262 -170

TYPE No.	MFRS	Pg&Line
NS22004	SOD	262 -181
NS22006	SOD	262 -192
NS22008	SOD	262 -203
NS30000	♦SOD	238 -110
NS30001	♦SOD	238 -180
NS30002	♦SOD	239 - 56
NS30003	♦SOD	239 -114
NS30004	♦SOD	239 -162
NSC3000	♦SOD	238 -103
NSC3001	♦SOD	238 -172
NSC3002	♦SOD	239 - 48
NSC3003	♦SOD	239 -112
NSC3004	♦SOD	239 -154
NSC3005	♦SOD	239 -205
NSC3006	♦SOD	240 - 2
NSC3007	♦SOD	240 - 54
NSC3008	♦SOD	240 - 66
NSC5001	♦SOD	238 - 6
NSC5002	♦SOD	238 - 7
NSC5003	♦SOD	238 - 8
NSC5004	♦SOD	239 -166
NSC5005	♦SOD	239 -206
NSC5006	♦SOD	240 - 14
NSC5008	♦SOD	240 - 69
NSD30000	♦SOD	262 -146
NSD30001	♦SOD	262 -158
NSD30002	♦SOD	262 -171
NSD30004	♦SOD	262 -182
NSD30006	♦SOD	262 -193
NSD30008	♦SOD	262 -204
NSD35000	♦SOD	262 -147
NSD35001	♦SOD	262 -159
NSD35002	♦SOD	262 -172
NSD35004	♦SOD	262 -183
NSD35006	♦SOD	262 -194
NSD35008	♦SOD	262 -205
NSD40000	♦SOD	262 -148
NSD40001	♦SOD	262 -160
NSD40002	♦SOD	262 -173
NSD40004	♦SOD	262 -184
NSD40006	♦SOD	262 -195
NSD40008	♦SOD	262 -206
NSD50000	♦SOD	262 -149
NSD50001	♦SOD	262 -161
NSD50002	♦SOD	262 -174
NSD50004	♦SOD	262 -185
NSD50006	♦SOD	262 -196
NSD50008	♦SOD	262 -207
NSR7140	♦DII	293 - 79
NSR7141	♦DII	293 - 92
NSR7142	♦DII	293 - 99
NSR7143	♦DII	293 -111
NSR8140	♦DII	238 -181
NSR8140S	♦DII	300 - 36
NSR8141	♦DII	239 - 57
NSR8141S	♦DII	300 - 69
NSR8142	♦DII	239 -163
NSR8142S	♦DII	300 -110
NSR8143	♦DII	240 - 3
NSR8143S	♦DII	300 -139
NSS2	♦DII	362 -190
NSS2-1	♦DII	363 - 20
NSS2-2	♦DII	363 - 62
NSS2-3	♦DII	363 - 71
NSS2-4	♦DII	363 -109
NSS2-6	♦DII	363 -154
NSS2-8	♦DII	363 -192
NSS2-10	♦DII	364 - 3
NSS3058A	♦DII	283 -101
NSS3059A	♦DII	283 -156
NSS3060A	♦DII	284 - 2
NSS3061A	♦DII	284 - 53
NSS3062A	♦DII	284 -109
NSS3063A	♦DII	284 -157
NSS3064A	♦DII	284 -211
NSS3065A	♦DII	285 - 69
NSS3066A	♦DII	402 - 70
NSS3078D	DII	372 - 11
NSS3078P	DII	372 - 12
NSS3079D	DII	372 - 15
NSS3079P	DII	372 - 16
NSS3080D	DII	372 - 21
NSS3080P	DII	372 - 22
NSS3081D	DII	372 - 27
NSS3081P	DII	372 - 28
NSS3082D	DII	372 - 31
NSS3082P	DII	372 - 32
NSS3083D	DII	372 - 37
NSS3083P	DII	372 - 38
NSS3084D	DII	372 - 40
NSS3084P	DII	372 - 41
NSS3085D	DII	372 - 46
NSS3085P	DII	372 - 47
NSS3086D	DII	372 - 51
NSS3086P	DII	372 - 52
NSS3541	♦DII	291 -115
NSS3541-1	♦DII	291 -158
NSS3541-1F	♦DII	291 -159
NSS3541-2	♦DII	291 -209
NSS3541-2F	♦DII	291 -210
NSS3541-3	♦DII	292 - 22
NSS3541-3F	♦DII	292 - 23
NSS3541-4	♦DII	292 - 56
NSS3541-4F	♦DII	292 - 57
NSS3541-6	♦DII	292 -114
NSS3541-6F	♦DII	292 -115
NSS3541-8	♦DII	292 -165
NSS3541-8F	♦DII	292 -166
NSS3541-10	♦DII	403 - 12
NSS3541-10F	♦DII	403 - 13
NSS3541-F	♦DII	291 -116
NTD04	♦EDI	421 -178
NTD05	♦EDI	423 -127
NTD06	♦EDI	424 -179

1. TYPE No. CROSS INDEX

IN TYPE NUMBER SEQUENCE

TYPE No.	MFRS	Pg&Line
NTD08	♦EDI	426 - 47
NTD10	♦EDI	427 - 81
NTD12	♦EDI	428 - 82
NTD14	♦EDI	428 -204
NTD16	♦EDI	429 -200
NTD18	♦EDI	430 - 58
NTD20	♦EDI	430 -150
NTD22	♦EDI	431 - 25
NTD24	♦EDI	431 - 58
NTD26	♦EDI	431 -186
NTD28	♦EDI	431 -215
NTD30	♦EDI	432 - 55
OA47	♦MULB	244 -194
♦PHIN	♦VALG	
OA72	♦BELI	234 - 98
OA73	♦BELI	233 -140
OA79	♦BELI	233 - 39
OA81	♦BELI	233 -153
OA85	♦BELI	233 -154
OA90	♦APX	232 -126
♦BELI	MISI	
♦MULB	♦PHIN	
SELI	♦VALG	
OA90-G	MATJ	233 -171
OA90-H	MATJ	233 -172
OA90-M	MATJ	233 -173
OA90-R	MATJ	233 -174
OA90A-G	MATJ	233 -175
OA90A-H	MATJ	233 -176
OA90A-M	MATJ	233 -177
OA90A-R	MATJ	233 -178
OA91	♦APX	233 -158
♦BELI	MATJ	
MISI	♦MULB	
♦PHIN	♦RTCF	
SELI	♦VALG	
OA91A	MATJ	233 -166
OA95	♦APX	233 -157
♦BELI	MATJ	
MISI	♦MULB	
♦PHIN	SELI	
	♦VALG	
OA95A	MATJ	233 -180
OA99	MATJ	233 - 28
OA99A	MATJ	233 -179
OA200	♦MULB	249 - 34
♦PHIN	♦RTCF	
	♦VALG	
OA200#B	MISI	231 -157
OA202	♦MULB	249 - 97
♦PHIN	♦RTCF	
	♦VALG	
ODBC47-330	♦SELI	440 - 10
ODCC56-330	♦SELI	440 - 11
ODDC56-330	♦SELI	440 - 12
OF305	♦MULB	237 - 76
♦PHIN	♦VALG	
OSB9110-4	♦MULB	415 - 82
♦PHIN	♦RTCF	
	♦VALG	
OSB9110-30	♦MULB	415 - 83
♦PHIN	♦RTCF	
	♦VALG	
OSB9210-4	♦MULB	415 - 96
♦PHIN	♦RTCF	
	♦VALG	
OSB9210-30	♦MULB	415 - 97
♦PHIN	♦RTCF	
	♦VALG	
OSB9310-4	♦MULB	415 - 88
♦PHIN	♦RTCF	
	♦VALG	
OSB9310-30	♦MULB	415 - 89
♦PHIN	♦RTCF	
	♦VALG	
OSB9410-4	♦MULB	415 -113
♦PHIN	♦RTCF	
	♦VALG	
OSB9410-30	♦MULB	415 -114
♦PHIN	♦RTCF	
	♦VALG	
OSM9110-4	♦MULB	415 - 84
♦PHIN	♦RTCF	
	♦VALG	
OSM9110-30	♦MULB	415 - 85
♦PHIN	♦RTCF	
	♦VALG	
OSM9210-4	♦MULB	415 - 98
♦PHIN	♦RTCF	
	♦VALG	
OSM9210-30	♦MULB	415 - 99
♦PHIN	♦RTCF	
	♦VALG	
OSM9310-4	♦MULB	415 - 90
♦PHIN	♦RTCF	
	♦VALG	
OSM9310-30	♦MULB	415 - 91
♦PHIN	♦RTCF	
	♦VALG	
OSM9410-4	♦MULB	415 -115
♦PHIN	♦RTCF	
	♦VALG	
OSM9410-30	♦MULB	415 -116
♦PHIN	♦RTCF	
	♦VALG	
OSM9510-12	♦MULB	430 - 33
♦PHIN	♦RTCF	
	♦VALG	
OSS9110-3	♦MULB	419 -164
♦PHIN	♦RTCF	
	♦VALG	
OSS9110-30	♦MULB	432 - 93
♦PHIN	♦RTCF	
	♦VALG	

TYPE No.	MFRS	Pg&Line
OSS9210-3	♦MULB	419 -171
♦PHIN	♦RTCF	
	♦VALG	
OSS9210-30	♦MULB	432 -100
♦PHIN	♦RTCF	
	♦VALG	
OSS9310-3	♦MULB	419 -167
♦PHIN	♦RTCF	
	♦VALG	
OSS9310-30	♦MULB	432 - 96
♦PHIN	♦RTCF	
	♦VALG	
OSS9410-3	♦MULB	419 -184
♦PHIN	♦RTCF	
	♦VALG	
OSS9410-30	♦MULB	432 -105
♦PHIN	♦RTCF	
	♦VALG	
P1A5	EDL	274 - 70
P1B5	EDL	274 - 76
P1C5	EDL	274 - 77
P1D5	EDL	274 - 81
P1E5	EDL	274 - 85
P1F5	EDL	274 - 87
P1G5	EDL	274 - 89
P1H5	EDL	274 - 91
P1K5	EDL	274 - 93
P1M5	EDL	274 - 95
P2A5	EDL	274 -111
P2B5	EDL	274 -119
P2C5	EDL	274 -122
P2D5	EDL	274 -129
P2E5	EDL	274 -134
P2F5	EDL	274 -141
P2G5	EDL	274 -151
P2H5	EDL	274 -159
P2K5	EDL	274 -166
P2M5	EDL	274 -174
P3A5	EDL	275 - 27
P3B5	EDL	275 - 42
P3C5	EDL	275 - 45
P3D5	EDL	275 - 56
P3E5	EDL	275 - 64
P3F5	EDL	275 - 77
P3G5	EDL	275 - 95
P3H5	EDL	275 -110
P3K5	EDL	275 -124
P3M5	EDL	275 -136
P4A5	EDL	275 -204
P4B5	EDL	275 -206
P4C5	EDL	275 -209
P4D5	EDL	275 -213
P4E5	EDL	275 -217
P4F5	EDL	276 - 3
P4G5	EDL	276 - 10
P4H5	EDL	276 - 18
P4K5	EDL	276 - 26
P4M5	EDL	276 - 33
P5A5	EDL	276 - 50
P5B5	EDL	276 - 55
P5C5	EDL	276 - 58
P5D5	EDL	276 - 62
P5E5	EDL	276 - 67
P5F5	EDL	276 - 72
P5G5	EDL	276 - 82
P5H5	EDL	276 - 94
P5K5	EDL	276 -101
P5M5	EDL	276 -109
P6A5	EDL	276 -132
P6B5	EDL	276 -139
P6C5	EDL	276 -144
P6D5	EDL	276 -155
P6E5	EDL	276 -169
P6F5	EDL	276 -180
P6G5	EDL	276 -201
P6H5	EDL	276 -219
P6K5	EDL	277 - 26
P6KE6V8A	♦THEF	326 - 38
P6KE6V8CA	♦THEF	326 - 39
P6KE6V8CP	♦THEF	326 - 40
P6KE6V8P	♦THEF	326 - 41
P6KE6.8	♦GSE	350 - 22
	♦MOTA	
P6KE6.8A	♦GSE	350 - 23
	♦MOTA	
P6KE7V5A	♦THEF	326 - 42
P6KE7V5CA	♦THEF	326 - 43
P6KE7V5CP	♦THEF	326 - 44
P6KE7V5P	♦THEF	326 - 45
P6KE7.5	♦GSE	350 - 24
	♦MOTA	
P6KE7.5A	♦GSE	350 - 25
	♦MOTA	
P6KE7.5C	♦GSE	350 - 26
P6KE8V2A	♦THEF	326 - 46
P6KE8V2CA	♦THEF	326 - 47
P6KE8V2CP	♦THEF	326 - 48
P6KE8V2P	♦THEF	326 - 49
P6KE8.2	♦GSE	350 - 27
	♦MOTA	
P6KE8.2A	♦GSE	350 - 28
	♦MOTA	
P6KE8.2C	♦GSE	350 - 29
P6KE9V1A	♦THEF	326 - 50
P6KE9V1CA	♦THEF	326 - 51
P6KE9V1CP	♦THEF	326 - 52
P6KE9V1P	♦THEF	326 - 53
P6KE9.1	♦GSE	350 - 30
	♦MOTA	
P6KE9.1A	♦GSE	350 - 31
	♦MOTA	
P6KE9.1C	♦GSE	350 - 32
P6KE9.1CA	♦GSE	350 - 33

TYPE No.	MFRS	Pg&Line
P6KE10	♦GSE	350 - 34
	♦MOTA	
P6KE10A	♦GSE	350 - 35
♦MOTA	♦THEF	
P6KE10C	♦GSE	350 - 36
P6KE10CA	♦GSE	350 - 37
	♦THEF	
P6KE10CP	♦THEF	326 - 54
P6KE10P	♦THEF	326 - 55
P6KE11	♦GSE	350 - 38
	♦MOTA	
P6KE11A	♦GSE	350 - 39
♦MOTA	♦THEF	
P6KE11C	♦GSE	350 - 40
P6KE11CA	♦GSE	350 - 41
	♦THEF	
P6KE11CP	♦THEF	326 - 56
P6KE11P	♦THEF	326 - 57
P6KE12	♦GSE	350 - 42
	♦MOTA	
P6KE12A	♦GSE	350 - 43
♦MOTA	♦THEF	
P6KE12CA	♦THEF	326 - 58
P6KE12CP	♦THEF	326 - 59
P6KE12P	♦THEF	326 - 60
P6KE13	♦GSE	350 - 44
	♦MOTA	
P6KE13A	♦GSE	350 - 45
♦MOTA	♦THEF	
P6KE13CA	♦THEF	326 - 61
P6KE13CP	♦THEF	326 - 62
P6KE13P	♦THEF	326 - 63
P6KE15	♦GSE	350 - 46
	♦MOTA	
P6KE15A	♦GSE	350 - 47
♦MOTA	♦THEF	
P6KE15CA	♦THEF	326 - 64
P6KE15CP	♦THEF	326 - 65
P6KE15P	♦THEF	326 - 66
P6KE16	♦GSE	350 - 48
	♦MOTA	
P6KE16A	♦GSE	350 - 49
♦MOTA	♦THEF	
P6KE16CA	♦THEF	326 - 67
P6KE16CP	♦THEF	326 - 68
P6KE16P	♦THEF	326 - 69
P6KE18	♦GSE	350 - 50
	♦MOTA	
P6KE18A	♦GSE	350 - 51
♦MOTA	♦THEF	
P6KE18CA	♦THEF	326 - 70
P6KE18CP	♦THEF	326 - 71
P6KE18P	♦THEF	326 - 72
P6KE20	♦GSE	350 - 52
	♦MOTA	
P6KE20A	♦GSE	350 - 53
♦MOTA	♦THEF	
P6KE20CA	♦THEF	326 - 73
P6KE20CP	♦THEF	326 - 74
P6KE20P	♦THEF	326 - 75
P6KE22	♦GSE	350 - 54
	♦MOTA	
P6KE22A	♦GSE	350 - 55
♦MOTA	♦THEF	
P6KE22CA	♦THEF	326 - 76
P6KE22CP	♦THEF	326 - 77
P6KE22P	♦THEF	326 - 78
P6KE24	♦GSE	350 - 56
	♦MOTA	
P6KE24A	♦GSE	350 - 57
♦MOTA	♦THEF	
P6KE24CA	♦THEF	326 - 79
P6KE24CP	♦THEF	326 - 80
P6KE24P	♦THEF	326 - 81
P6KE27	♦GSE	350 - 58
	♦MOTA	
P6KE27A	♦GSE	350 - 59
♦MOTA	♦THEF	
P6KE27CA	♦THEF	326 - 82
P6KE27CP	♦THEF	326 - 83
P6KE27P	♦THEF	326 - 84
P6KE30	♦GSE	350 - 60
	♦MOTA	
P6KE30A	♦GSE	350 - 61
♦MOTA	♦THEF	
P6KE30CA	♦THEF	326 - 85
P6KE30CP	♦THEF	326 - 86
P6KE30P	♦THEF	326 - 87
P6KE33	♦GSE	350 - 62
	♦MOTA	
P6KE33A	♦GSE	350 - 63
♦MOTA	♦THEF	
P6KE33CA	♦THEF	326 - 88
P6KE33CP	♦THEF	326 - 89
P6KE33P	♦THEF	326 - 90
P6KE36	♦GSE	350 - 64
	♦MOTA	
P6KE36A	♦GSE	350 - 65
♦MOTA	♦THEF	
P6KE36CA	♦THEF	326 - 91
P6KE36CP	♦THEF	326 - 92
P6KE36P	♦THEF	326 - 93
P6KE39	♦GSE	350 - 66
	♦MOTA	
P6KE39A	♦GSE	350 - 67
♦MOTA	♦THEF	
P6KE39CA	♦THEF	326 - 94
P6KE39CP	♦THEF	326 - 95
P6KE39P	♦THEF	326 - 96
P6KE43	♦GSE	350 - 68
	♦MOTA	
P6KE43A	♦GSE	350 - 69
♦MOTA	♦THEF	
P6KE43CA	♦THEF	326 - 97

TYPE No.	MFRS	Pg&Line
P6KE43CP	♦THEF	326 - 98
P6KE43P	♦THEF	326 - 99
P6KE47	♦GSE	350 - 70
	♦MOTA	
P6KE47A	♦GSE	350 - 71
♦MOTA	♦THEF	
P6KE47CA	♦THEF	326 -100
P6KE47CP	♦THEF	326 -101
P6KE47P	♦THEF	326 -102
P6KE51	♦GSE	350 - 72
	♦MOTA	
P6KE51A	♦GSE	350 - 73
♦MOTA	♦THEF	
P6KE51CA	♦THEF	326 -103
P6KE51CP	♦THEF	326 -104
P6KE51P	♦THEF	326 -105
P6KE56	♦GSE	350 - 74
	♦MOTA	
P6KE56A	♦GSE	350 - 75
♦MOTA	♦THEF	
P6KE56CA	♦THEF	326 -106
P6KE56CP	♦THEF	326 -107
P6KE56P	♦THEF	326 -108
P6KE62	♦GSE	350 - 76
	♦MOTA	
P6KE62A	♦GSE	350 - 77
♦MOTA	♦THEF	
P6KE62CA	♦THEF	326 -109
P6KE62CP	♦THEF	326 -110
P6KE62P	♦THEF	327 - 1
P6KE68	♦GSE	350 - 78
	♦MOTA	
P6KE68A	♦GSE	350 - 79
♦MOTA	♦THEF	
P6KE68CA	♦THEF	327 - 2
P6KE68CP	♦THEF	327 - 3
P6KE68P	♦THEF	327 - 4
P6KE75	♦GSE	350 - 80
	♦MOTA	
P6KE75A	♦GSE	350 - 81
♦MOTA	♦THEF	
P6KE75CA	♦THEF	327 - 5
P6KE75CP	♦THEF	327 - 6
P6KE75P	♦THEF	327 - 7
P6KE82	♦GSE	350 - 82
	♦MOTA	
P6KE82A	♦GSE	350 - 83
♦MOTA	♦THEF	
P6KE82CA	♦THEF	327 - 8
P6KE82CP	♦THEF	327 - 9
P6KE82P	♦THEF	327 - 10
P6KE91	♦GSE	350 - 84
	♦MOTA	
P6KE91A	♦GSE	350 - 85
♦MOTA	♦THEF	
P6KE91CA	♦THEF	327 - 11
P6KE91CP	♦THEF	327 - 12
P6KE91P	♦THEF	327 - 13
P6KE100	♦GSE	350 - 86
	♦MOTA	
P6KE100A	♦GSE	350 - 87
♦MOTA	♦THEF	
P6KE100CA	♦THEF	327 - 14
P6KE100CP	♦THEF	327 - 15
P6KE100P	♦THEF	327 - 16
P6KE110	♦GSE	350 - 88
	♦MOTA	
P6KE110A	♦GSE	350 - 89
♦MOTA	♦THEF	
P6KE110CA	♦THEF	327 - 17
P6KE110CP	♦THEF	327 - 18
P6KE110P	♦THEF	327 - 19
P6KE120	♦GSE	350 - 90
	♦MOTA	
P6KE120A	♦GSE	350 - 91
♦MOTA	♦THEF	
P6KE120CA	♦THEF	327 - 20
P6KE120CP	♦THEF	327 - 21
P6KE120P	♦THEF	327 - 22
P6KE130	♦GSE	350 - 92
	♦MOTA	
P6KE130A	♦GSE	350 - 93
♦MOTA	♦THEF	
P6KE130CA	♦THEF	327 - 23
P6KE130CP	♦THEF	327 - 24
P6KE130P	♦THEF	327 - 25
P6KE150	♦GSE	350 - 94
	♦MOTA	
P6KE150A	♦GSE	350 - 95
♦MOTA	♦THEF	
P6KE150CA	♦THEF	327 - 26
P6KE150CP	♦THEF	327 - 27
P6KE150P	♦THEF	327 - 28
P6KE160	♦GSE	350 - 96
	♦MOTA	
P6KE160A	♦GSE	350 - 97
♦MOTA	♦THEF	
P6KE160CA	♦THEF	327 - 29
P6KE160CP	♦THEF	327 - 30
P6KE160P	♦THEF	327 - 31
P6KE170	♦GSE	350 - 98
	♦MOTA	
P6KE170A	♦GSE	350 - 99
♦MOTA	♦THEF	
P6KE170CA	♦THEF	327 - 32
P6KE170CP	♦THEF	327 - 33
P6KE170P	♦THEF	327 - 34
P6KE180	♦GSE	350 -100
	♦MOTA	
P6KE180A	♦GSE	350 -101
♦MOTA	♦THEF	
P6KE180CA	♦THEF	327 - 35
P6KE180CP	♦THEF	327 - 36
P6KE180P	♦THEF	327 - 37

TYPE No.	MFRS	Pg&Line
P6KE200	♦GSE	350 -102
	♦MOTA	
P6KE200A	♦GSE	350 -103
♦MOTA	♦THEF	
P6KE200CA	♦THEF	327 - 38
P6KE200CP	♦THEF	327 - 39
P6KE200P	♦THEF	327 - 40
P6KE220A	♦THEF	327 - 41
P6KE220CA	♦THEF	327 - 42
P6KE220CP	♦THEF	327 - 43
P6KE220P	♦THEF	327 - 44
P6KE250A	♦THEF	327 - 45
P6KE250CA	♦THEF	327 - 46
P6KE250CP	♦THEF	327 - 47
P6KE250P	♦THEF	327 - 48
P6KE280A	♦THEF	327 - 49
P6KE280CA	♦THEF	327 - 50
P6KE280CP	♦THEF	327 - 51
P6KE280P	♦THEF	327 - 52
P6KE300A	♦THEF	327 - 53
P6KE300CA	♦THEF	327 - 54
P6KE300CP	♦THEF	327 - 55
P6KE300P	♦THEF	327 - 56
P6KE320A	♦THEF	327 - 57
P6KE320CA	♦THEF	327 - 58
P6KE320CP	♦THEF	327 - 59
P6KE320P	♦THEF	327 - 60
P6KE350A	♦THEF	327 - 61
P6KE350CA	♦THEF	327 - 62
P6KE350CP	♦THEF	327 - 63
P6KE350P	♦THEF	327 - 64
P6KE400A	♦THEF	327 - 65
P6KE400CA	♦THEF	327 - 66
P6KE400CP	♦THEF	327 - 67
P6KE400P	♦THEF	327 - 68
P6KE440A	♦THEF	327 - 69
P6KE440CA	♦THEF	327 - 70
P6KE440CP	♦THEF	327 - 71
P6KE440P	♦THEF	327 - 72
P6M5	EDL	277 - 41
P6SE6.8	♦SCN	350 -104
P6SE6.8A	♦SCN	350 -105
P6SE7.5	♦SCN	350 -106
P6SE7.5A	♦SCN	350 -107
P6SE8.2	♦SCN	350 -108
P6SE8.2A	♦SCN	350 -109
P6SE9.1	♦SCN	350 -110
P6SE9.1A	♦SCN	351 - 1
P6SE10	♦SCN	351 - 2
P6SE10A	♦SCN	351 - 3
P6SE11	♦SCN	351 - 4
P6SE11A	♦SCN	351 - 5
P6SE12	♦SCN	351 - 6
P6SE12A	♦SCN	351 - 7
P6SE13	♦SCN	351 - 8
P6SE13A	♦SCN	351 - 9
P6SE15	♦SCN	351 - 10
P6SE15A	♦SCN	351 - 11
P6SE16	♦SCN	351 - 12
P6SE16A	♦SCN	351 - 13
P6SE18	♦SCN	351 - 14
P6SE18A	♦SCN	351 - 15
P6SE20	♦SCN	351 - 16
P6SE20A	♦SCN	351 - 17
P6SE22	♦SCN	351 - 18
P6SE22A	♦SCN	351 - 19
P6SE24	♦SCN	351 - 20
P6SE24A	♦SCN	351 - 21
P6SE27	♦SCN	351 - 22
P6SE27A	♦SCN	351 - 23
P6SE30	♦SCN	351 - 24
P6SE30A	♦SCN	351 - 25
P6SE33	♦SCN	351 - 26
P6SE33A	♦SCN	351 - 27
P6SE36	♦SCN	351 - 28
P6SE36A	♦SCN	351 - 29
P6SE39	♦SCN	351 - 30
P6SE39A	♦SCN	351 - 31
P6SE43	♦SCN	351 - 32
P6SE43A	♦SCN	351 - 33
P6SE47	♦SCN	351 - 34
P6SE47A	♦SCN	351 - 35
P6SE51	♦SCN	351 - 36
P6SE51A	♦SCN	351 - 37
P6SE56	♦SCN	351 - 38
P6SE56A	♦SCN	351 - 39
P6SE62	♦SCN	351 - 40
P6SE62A	♦SCN	351 - 41
P6SE68	♦SCN	351 - 42
P6SE68A	♦SCN	351 - 43
P6SE75	♦SCN	351 - 44
P6SE75A	♦SCN	351 - 45
P6SE82	♦SCN	351 - 46
P6SE82A	♦SCN	351 - 47
P6SE91	♦SCN	351 - 48
P6SE91A	♦SCN	351 - 49
P6SE100	♦SCN	351 - 50
P6SE100A	♦SCN	351 - 51
P6SE110	♦SCN	351 - 52
P6SE110A	♦SCN	351 - 53
P6SE120	♦SCN	351 - 54
P6SE120A	♦SCN	351 - 55
P6SE130	♦SCN	351 - 56
P6SE130A	♦SCN	351 - 57
P6SE150	♦SCN	351 - 58
P6SE150A	♦SCN	351 - 59
P6SE160	♦SCN	351 - 60
P6SE160A	♦SCN	351 - 61
P6SE170	♦SCN	351 - 62
P6SE170A	♦SCN	351 - 63
P6SE180	♦SCN	351 - 64
P6SE180A	♦SCN	351 - 65
P6SE200	♦SCN	351 - 66
P6SE200A	♦SCN	351 - 67

Δ-Registered with JEDEC by this manufacturer

♦-Mfr's data sheet available in microfilm service

1. TYPE No. CROSS INDEX

IN TYPE NUMBER SEQUENCE

TYPE No.	MFRS	Pg&Line
P7A5	EDL	277 - 76
P7B5	EDL	277 - 87
P7C5	EDL	277 - 89
P7D5	EDL	277 -101
P7E5	EDL	277 -103
P7F5	EDL	277 -116
P7G5	EDL	277 -129
P7H5	EDL	277 -143
P7K5	EDL	277 -157
P7M5	EDL	277 -169
P19C	♦HITJ	300 -101
P19E	♦HITJ	300 -133
P19G	♦HITJ	300 -163
P19J	♦HITJ	403 -158
P20C	♦HITJ	300 -102
P20E	♦HITJ	300 -134
P20G	♦HITJ	300 -164
P20J	♦HITJ	403 -159
P32H	♦THEF	420 - 61
P40H	♦THEF	422 - 12
P48H	♦THEF	423 - 34
P51A	♦HITJ	263 -152
P51B	♦HITJ	263 -154
P51C	♦HITJ	263 -156
P52A	♦HITJ	263 -153
P52B	♦HITJ	263 -155
P52C	♦HITJ	263 -157
P53A	♦HITJ	300 - 32
P53B	♦HITJ	300 - 57
P53T	♦HITJ	300 - 33
P54A	♦HITJ	300 - 31
P54B	♦HITJ	300 - 58
P54T	♦HITJ	300 - 34
P56H	♦THEF	424 -112
P64H	♦THEF	425 - 33
P70H	♦THEF	425 -109
P80H	♦THEF	426 -101
P100A	♦GIC	283 - 92
P100B	♦GIC	283 -145
P100D	♦GIC	283 -210
P100G	♦GIC	284 - 97
P100H	♦THEF	427 -191
P100J	♦GIC	284 -199
P100K	♦GIC	285 - 58
P100M	♦GIC	402 - 63
P200H	♦THEF	430 -200
P250H	♦THEF	431 -165
P300A	♦GIC	287 -204
P300B	♦GIC	288 - 47
P300D	♦GIC	288 -128
P300G	♦GIC	289 - 6
P300J	♦GIC	289 - 88
P300K	♦GIC	289 -157
P300M	♦GIC	402 -189
P400H	♦THEF	432 -200
P511	THEF	408 -184
P513	THEF	412 - 47
P600A	♦FGRS	291 -120
	♦GIC	
P600B	♦FGRS	291 -162
	♦GIC	
P600D	♦FGRS	291 -213
	♦GIC	
P600G	♦FGRS	292 - 60
	♦GIC	
P600J	♦FGRS	292 -118
	♦GIC	
P600K	♦FGRS	292 -170
	♦GIC	
P600M	♦GIC	403 - 15
P0890	PII	439 - 8
P0890A	PII	439 - 9
PB61	♦DII	366 - 47
PB62	♦DII	366 - 73
PB64	♦DII	366 -102
PB66	♦DII	366 -130
PB68	♦DII	366 -157
PB101M	♦DGE	360 -102
PB102M	♦DGE	360 -130
PB103M	♦DGE	360 -164
PB104M	♦DGE	360 -199
PB105M	♦DGE	361 - 21
PB106M	♦DGE	361 - 47
PB107M	♦DGE	401 -185
PB111	INRJ	367 -132
PB111F	INRJ	272 -164
PB112	INRJ	367 -167
PB112F	INRJ	272 -166
PB114	INRJ	367 -209
PB605	♦DII	366 - 24
PB610	♦DII	366 -181
PBC05	♦EDI	300 - 19
PBC10	♦EDI	300 - 48
PBC20	♦EDI	300 - 83
PBC40	♦EDI	300 -120
PBC60	♦EDI	300 -145
PBC80	♦EDI	300 -161
PBC100	♦EDI	403 -153
PBF251	♦DGE	364 - 22
PBF252	♦DGE	364 - 26
PBF253	♦DGE	364 - 31
PBF254	♦DGE	364 - 38
PBF255	♦DGE	364 - 43
PBF256	♦DGE	364 - 48
PBF257	♦DGE	364 - 50
PBP151	♦DGE	361 -141
PBP152	♦DGE	361 -167
PBP153	♦DGE	361 -200
PBP154	♦DGE	362 - 36
PBP155	♦DGE	362 - 70
PBP156	♦DGE	362 - 97
PBP157	♦DGE	402 - 64
PBP201	♦DGE	362 -178
PBP202	♦DGE	363 - 7

TYPE No.	MFRS	Pg&Line
PBP203	♦DGE	363 - 48
PBP204	♦DGE	363 - 97
PBP205	♦DGE	363 -141
PBP206	♦DGE	363 -179
PBP207	♦DGE	402 -115
PBR05	EDI	252 -115
PBR10	EDI	253 - 83
PBR20	EDI	254 - 81
PBR40	EDI	254 -213
PBR60	EDI	255 -100
PBT05	♦EDI	370 -146
PBY125	PSLI	280 -101
PBY126	PSLI	281 -128
PBY127	PSLI	282 - 81
PBYX55	PSLI	239 -209
PBYX71	PSLI	293 - 21
PD05	♦EDI	362 -179
PD10	♦EDI	363 - 8
PD20	♦EDI	363 - 49
PD40	♦EDI	363 - 98
PD60	♦EDI	363 -142
PD80	♦EDI	363 -180
PD100	♦EDI	402 -116
PD0810	PII	439 - 10
PD0810A	PII	439 - 11
PD0810AL	PII	439 - 12
PD0810L	PII	439 - 13
PD6000,A	♦TRWS	164 -135
PD6001,A	♦TRWS	165 - 60
PD6002,A	♦TRWS	165 -191
PD6003,A	♦TRWS	166 -162
PD6004,A	♦TRWS	167 -127
PD6005,A	♦TRWS	168 -134
PD6006,A	♦TRWS	169 -166
PD6007,A	♦TRWS	171 - 44
PD6008,A	♦TRWS	172 -119
PD6009,A	♦TRWS	174 -121
PD6010,A	♦TRWS	177 -159
PD6011,A	♦TRWS	179 -151
PD6012,A	♦TRWS	181 -133
PD6013,A	♦TRWS	184 -181
PD6014,A	♦TRWS	186 -210
PD6015,A	♦TRWS	188 -170
PD6016,A	♦TRWS	190 -125
PD6017,A	♦TRWS	192 -107
PD6018,A	♦TRWS	194 -127
PD6019,A	♦TRWS	196 - 37
PD6020,A	♦TRWS	198 - 37
PD6041	TRWS	164 -136
PD6042	TRWS	165 - 61
PD6043	TRWS	165 -192
PD6044	TRWS	166 -163
PD6045	TRWS	167 -128
PD6046	TRWS	168 -135
PD6047	TRWS	169 -167
PD6048	TRWS	171 - 45
PD6049	TRWS	172 -120
PD6050	TRWS	174 -122
PD6051	TRWS	177 -160
PD6052	TRWS	179 -152
PD6053	TRWS	181 -134
PD6054	TRWS	184 -182
PD6055	TRWS	187 - 1
PD6056	TRWS	188 -171
PD6057	TRWS	190 -126
PD6058	TRWS	192 -108
PD6059	TRWS	194 -128
PD6060	TRWS	196 - 38
PD6061	TRWS	198 - 38
PD6201	♦TRWS	168 -136
PD6202	♦TRWS	169 -168
PD6203	♦TRWS	171 - 46
PD6204	♦TRWS	172 -121
PD6205	♦TRWS	174 -123
PD6206	♦TRWS	177 -161
PD6207	♦TRWS	179 -153
PD6208	♦TRWS	181 -135
PD6209	♦TRWS	184 -183
PD6210	♦TRWS	187 - 2
PD9047	♦TRWS	246 - 31
PD9049	♦TRWS	250 -112
PD9050	♦TRWS	257 -214
PD9050A	♦TRWS	257 -143
PD9050B	♦TRWS	258 - 52
PD9050C	♦TRWS	258 -201
PD9050D	♦TRWS	259 - 39
PD9050E	♦TRWS	259 -159
PD9757	TRWS	239 - 26
PD9767	TRWS	238 -160
PDR25	PSLI	275 -157
PDR50	PSLI	275 - 39
PDR300	PSLI	239 -133
PDR301	PSLI	238 -211
PE40	EDI	365 -194
PF4HZ	THEF	288 -201
PF6HZ	THEF	289 - 67
PF8HZ	THEF	289 -137
PF8Z6V8	THEF	351 - 68
PF8Z8V2	THEF	351 - 69
PF8Z10	THEF	351 - 70
PF8Z12	THEF	351 - 71
PF8Z15	THEF	351 - 72
PF8Z18	THEF	351 - 73
PF8Z22	THEF	351 - 74
PF8Z27	THEF	351 - 75
PF8Z33	THEF	351 - 76
PF8Z39	THEF	351 - 77
PF8Z47	THEF	351 - 78
PF8Z56	THEF	351 - 79
PF8Z62	THEF	351 - 80
PF8Z68	THEF	351 - 81
PF8Z82	THEF	351 - 82
PF8Z100	THEF	351 - 83
PF8Z120	THEF	351 - 84

TYPE No.	MFRS	Pg&Line
PF8Z150	THEF	351 - 85
PF8Z180	THEF	351 - 86
PF10HZ	THEF	402 -172
PF110R	SAKJ	238 -203
PF110S	♦SAKJ	294 - 15
PF125R	SAKJ	239 -105
PF125S	♦SAKJ	294 - 54
PF140R	SAKJ	239 -182
PF140S	♦SAKJ	294 - 97
PF310R	SAKJ	238 -204
PF310S	♦SAKJ	300 - 50
PF325R	SAKJ	239 -106
PF325S	♦SAKJ	300 - 94
PF340R	SAKJ	239 -183
PF340S	♦SAKJ	300 -124
PF810R	SAKJ	238 -205
PF820R	SAKJ	239 - 90
PF825R	SAKJ	239 -107
PFC6V4	THEF	327 - 73
PFC7V0	THEF	327 - 74
PFC7V8	THEF	327 - 75
PFC8V5	THEF	327 - 76
PFC9V4	THEF	327 - 77
PFC10	THEF	327 - 78
PFC11	THEF	327 - 79
PFC13	THEF	327 - 80
PFC14	THEF	327 - 81
PFC15	THEF	327 - 82
PFC17	THEF	327 - 83
PFC19	THEF	327 - 84
PFC20	THEF	327 - 85
PFC23	THEF	327 - 86
PFC26	THEF	327 - 87
PFC28	THEF	327 - 88
PFC31	THEF	327 - 89
PFC33	THEF	327 - 90
PFC37	THEF	327 - 91
PFC40	THEF	327 - 92
PFC44	THEF	327 - 93
PFC48	THEF	327 - 94
PFC53	THEF	327 - 95
PFC58	THEF	327 - 96
PFC64	THEF	327 - 97
PFC70	THEF	327 - 98
PFC78	THEF	327 - 99
PFC85	THEF	327 -100
PFC94	THEF	327 -101
PFC102	THEF	327 -102
PFC111	THEF	327 -103
PFC128	THEF	327 -104
PFC136	THEF	327 -105
PFC145	THEF	327 -106
PFC154	THEF	327 -107
PFC171	THEF	327 -108
PFG930B05	PII	439 - 14
PFR103N	♦PSLI	288 - 7
PFR107N	♦PSLI	292 -219
PFR115N	♦PSLI	296 - 48
PFR130N	♦PSLI	300 - 45
PFR203N	♦PSLI	288 - 79
PFR207N	♦PSLI	293 - 5
PFR215N	♦PSLI	296 - 80
PFR230N	♦PSLI	300 - 79
PFR850	THEF	257 -171
PFR851	THEF	258 - 92
PFR852	THEF	259 - 90
PFR854	THEF	260 - 57
PFR856	THEF	260 -191
PFZ6V8A	♦THEF	351 - 87
PFZ6V8P	♦THEF	327 -109
PFZ7V5A	♦THEF	351 - 88
PFZ7V5P	♦THEF	327 -110
PFZ8V2A	♦THEF	351 - 89
PFZ8V2P	♦THEF	328 - 1
PFZ9V1A	♦THEF	351 - 90
PFZ9V1P	♦THEF	328 - 2
PFZ10A	♦THEF	351 - 91
PFZ10P	♦THEF	328 - 3
PFZ11A	♦THEF	351 - 92
PFZ11P	♦THEF	328 - 4
PFZ12A	♦THEF	351 - 93
PFZ12P	♦THEF	328 - 5
PFZ13A	♦THEF	351 - 94
PFZ13P	♦THEF	328 - 6
PFZ15A	♦THEF	351 - 95
PFZ15P	♦THEF	328 - 7
PFZ16A	♦THEF	351 - 96
PFZ16P	♦THEF	328 - 8
PFZ18A	♦THEF	351 - 97
PFZ18P	♦THEF	328 - 9
PFZ20A	♦THEF	351 - 98
PFZ20P	♦THEF	328 - 10
PFZ22A	♦THEF	351 - 99
PFZ22P	♦THEF	328 - 11
PFZ24A	♦THEF	351 -100
PFZ24P	♦THEF	328 - 12
PFZ27A	♦THEF	351 -101
PFZ27P	♦THEF	328 - 13
PFZ30A	♦THEF	351 -102
PFZ30P	♦THEF	328 - 14
PFZ33A	♦THEF	351 -103
PFZ33P	♦THEF	328 - 15
PFZ36A	♦THEF	351 -104
PFZ36P	♦THEF	328 - 16
PFZ39A	♦THEF	351 -105
PFZ39P	♦THEF	328 - 17
PFZ43A	♦THEF	351 -106
PFZ43P	♦THEF	328 - 18
PFZ47A	♦THEF	351 -107
PFZ47P	♦THEF	328 - 19
PFZ51A	♦THEF	351 -108
PFZ51P	♦THEF	328 - 20
PFZ56A	♦THEF	351 -109
PFZ56P	♦THEF	328 - 21

TYPE No.	MFRS	Pg&Line
PFZ62A	♦THEF	351 -110
PFZ62P	♦THEF	328 - 22
PFZ68A	♦THEF	352 - 1
PFZ68P	♦THEF	328 - 23
PFZ75A	♦THEF	352 - 2
PFZ75P	♦THEF	328 - 24
PFZ82A	♦THEF	352 - 3
PFZ82P	♦THEF	328 - 25
PFZ91A	♦THEF	352 - 4
PFZ91P	♦THEF	328 - 26
PFZ100A	♦THEF	352 - 5
PFZ100P	♦THEF	328 - 27
PFZ110A	♦THEF	352 - 6
PFZ110P	♦THEF	328 - 28
PFZ120A	♦THEF	352 - 7
PFZ120P	♦THEF	328 - 29
PFZ130A	♦THEF	352 - 8
PFZ130P	♦THEF	328 - 30
PFZ150A	♦THEF	352 - 9
PFZ150P	♦THEF	328 - 31
PFZ160A	♦THEF	352 - 10
PFZ160P	♦THEF	328 - 32
PFZ170A	♦THEF	352 - 11
PFZ170P	♦THEF	328 - 33
PFZ180A	♦THEF	352 - 12
PFZ180P	♦THEF	328 - 34
PFZ200A	♦THEF	352 - 13
PFZ200P	♦THEF	328 - 35
PFZ220A	♦THEF	352 - 14
PFZ220P	♦THEF	328 - 36
PFZ250A	♦THEF	328 - 37
PFZ250P	♦THEF	328 - 38
PFZ280A	♦THEF	328 - 39
PFZ280P	♦THEF	328 - 40
PFZ300A	♦THEF	328 - 41
PFZ300P	♦THEF	328 - 42
PFZ320A	♦THEF	328 - 43
PFZ320P	♦THEF	328 - 44
PFZ350A	♦THEF	328 - 45
PFZ350P	♦THEF	328 - 46
PFZ400A	♦THEF	328 - 47
PFZ400P	♦THEF	328 - 48
PFZ440A	♦THEF	328 - 49
PFZ440P	♦THEF	328 - 50
PFZD6V8	THEF	352 - 15
PFZD8V2	THEF	352 - 16
PFZD10	THEF	352 - 17
PFZD12	THEF	352 - 18
PFZD15	THEF	352 - 19
PFZD18	THEF	352 - 20
PFZD22	THEF	352 - 21
PFZD27	THEF	352 - 22
PFZD33	THEF	352 - 23
PFZD39	THEF	352 - 24
PFZD47	THEF	352 - 25
PFZD56	THEF	352 - 26
PFZD62	THEF	352 - 27
PFZD68	THEF	352 - 28
PFZD82	THEF	352 - 29
PFZD100	THEF	352 - 30
PFZD120	THEF	352 - 31
PFZD150	THEF	352 - 32
PFZD180	THEF	352 - 33
PH40-200	MULB	301 -138
♦PHIN	♦RTCF	
	♦VALG	
PH40-600	MULB	301 -218
♦PHIN	♦RTCF	
	♦VALG	
PH40-1000	MULB	403 -182
♦PHIN	♦RTCF	
	♦VALG	
PH70-200	MULB	304 - 65
♦PHIN	♦RTCF	
	♦VALG	
PH70-600	MULB	304 -149
♦PHIN	♦RTCF	
	♦VALG	
PH70-1000	MULB	404 - 8
♦PHIN	♦RTCF	
	♦VALG	
PHR103N	♦PSLI	288 - 8
PHR107N	♦PSLI	292 -220
PHR115N	♦PSLI	296 - 49
PHR203N	♦PSLI	288 - 80
PHR207N	♦PSLI	293 - 6
PHR215N	♦PSLI	296 - 81
PHR5007N	♦PSLI	292 -214
PHSD51	♦MULB	375 - 68
♦PHIN	♦RTCF	
	♦VALG	
PIP8.4	♦GSE	352 - 34
PIP24	♦GSE	352 - 35
PIP30	♦GSE	352 - 36
PIP60	♦GSE	352 - 37
PIP120	♦GSE	352 - 38
PIP208	♦GSE	352 - 39
PIP250	♦GSE	352 - 40
PIP440	♦GSE	352 - 41
PIP500	♦GSE	352 - 42
PK05	♦EDI	367 -101
PK10	♦EDI	367 -129
PK20	♦EDI	367 -164
PK40	♦EDI	367 -206
PK60	♦EDI	368 - 26
PK80	♦EDI	368 - 60
PK0620	PII	439 - 87
PK0620L	PII	439 - 88
PK0820	PII	439 - 89
PK0820L	PII	439 - 90
PKK500	PII	437 - 11
PKK501	PII	437 - 12
PKK502	PII	437 - 13
PKK503	PII	437 - 14

TYPE No.	MFRS	Pg&Line
PKK504	PII	437 - 15
PL3V3Z	THEF	166 - 77
PL3V6Z	THEF	167 - 43
PL3V9Z	THEF	168 - 23
PL4HZ	THEF	281 -104
PL4V3Z	THEF	169 - 46
PL4V7Z	THEF	170 - 99
PL5V1Z	THEF	171 -180
PL5V6Z	THEF	173 - 65
PL6HZ	THEF	281 -217
PL6V2Z	THEF	175 -128
PL6V8Z	THEF	178 -111
PL7V5Z	THEF	180 -105
PL8HZ	THEF	282 - 82
PL8V2Z	THEF	182 - 88
PL9V1Z	THEF	185 -120
PL10HZ	THEF	401 -214
PL10Z	THEF	187 -180
PL11Z	THEF	189 - 92
PL12Z	THEF	191 - 61
PL13Z	THEF	193 - 11
PL15Z	THEF	195 - 60
PL16Z	THEF	196 -154
PL18Z	THEF	198 -170
PL20Z	THEF	200 -162
PL22Z	THEF	202 - 62
PL24Z	THEF	203 -160
PL27Z	THEF	205 - 98
PL30Z	THEF	207 - 24
PL33Z	THEF	208 -117
PL36Z	THEF	209 -181
PL39Z	THEF	211 - 16
PL43Z	THEF	212 - 27
PL47Z	THEF	213 - 42
PL51Z	THEF	214 - 39
PL56Z	THEF	215 - 25
PL62Z	THEF	216 - 31
PL68Z	THEF	217 - 12
PL75Z	THEF	217 -194
PL82Z	THEF	218 -173
PL91Z	THEF	219 -155
PL100Z	THEF	220 -114
PL110Z	THEF	221 - 76
PL120Z	THEF	222 - 27
PL130Z	THEF	222 -172
PL150Z	THEF	224 - 16
PL160Z	THEF	224 -148
PL180Z	THEF	225 -154
PL200Z	THEF	226 -158
PLE1.5	THEF	163 - 83
PLE2	THEF	163 -152
PLQ0,8	♦THEF	280 - 39
PLQ1	♦THEF	280 - 57
PLR2T	♦THEF	241 - 82
PLR8T	♦THEF	241 -108
PLR15T	♦THEF	241 -142
PLR810	♦THEF	257 -192
PLR811	♦THEF	258 -124
PLR812	♦THEF	259 -125
PLR813	♦THEF	259 -206
PLR814	♦THEF	260 - 84
PLR816	♦THEF	260 -215
PLR817	♦THEF	261 - 70
PLR818	♦THEF	261 -128
PM1	TRWS	242 -209
PM7A2	AEIL	367 -159
PM7A2Q	AEIL	369 - 8
PM7A2R	AEIL	369 -154
PM7A4	AEIL	367 -202
PM7A4Q	AEIL	369 - 38
PM7A4R	AEIL	369 -157
PM7A6	AEIL	368 - 22
PM7A6Q	AEIL	369 - 62
PM7A6R	AEIL	369 -162
PM7A8	AEIL	368 - 57
PM7A8Q	AEIL	369 - 87
PM7A8R	AEIL	369 -166
PM7A10	AEIL	368 - 80
PM7A10Q	AEIL	369 -105
PM7A10R	AEIL	369 -167
PM7A12	AEIL	368 - 93
PM7A12Q	AEIL	369 -117
PM7A12R	AEIL	369 -168
PM021	TRWS	242 -206
PM031	TRWS	243 - 32
PM034	TRWS	243 - 33
PM041	TRWS	243 - 81
PM042	TRWS	243 - 82
PMA104P	UNI	429 -149
PMA104X	♦UNI	272 -180
		429 -144
PMD100-02	♦PII	439 - 91
PMD100-08	♦PII	439 - 92
PMD100-09	♦PII	439 - 93
PMD100-19	♦PII	439 - 94
PMD100-42	♦PII	439 - 95
PMR27K050	♦LAM	296 - 26
PMR27K100	♦LAM	296 - 42
PMR27K200	♦LAM	296 - 75
PMR31K050	♦LAM	296 - 27
PMR31K100	♦LAM	296 - 43
PMR31K200	♦LAM	296 - 76
PMR35K050	♦LAM	300 - 6
PMR35K100	♦LAM	300 - 37
PMR35K200	♦LAM	300 - 70
PMR36K050	♦LAM	300 - 7
PMR36K100	♦LAM	300 - 38
PMR36K200	♦LAM	300 - 71
PR0101	PII	244 - 89
PR0102	PII	244 - 90
PR0103	PII	244 - 91
PR0104	PII	244 -169
PR0105	PII	244 -170
PR0106	PII	244 -171

Δ-Registered with JEDEC by this manufacturer

♦-Mfr's data sheet available in microfilm service

1. TYPE No. CROSS INDEX

IN TYPE NUMBER SEQUENCE

TYPE No.	MFRS	Pg&Line
PR0107	PII	244 -196
PR0108	PII	244 -197
PR0109	PII	244 -198
PR0110	PII	244 -199
PR0111	PII	245 -122
PR0112	PII	245 -123
PR0113	PII	246 - 22
PR0114	PII	246 - 23
PR0115	PII	246 -169
PR0116	PII	246 -170
PR0117	PII	246 -171
PR0118	PII	246 -208
PR0119	PII	246 -209
PR0120	PII	246 -210
PR0121	PII	246 -211
PR121	THEF	406 - 49
PR141	THEF	409 - 71
PR208-RT	SSY	401 -149
PR222-RT	SSY	445 - 76
PR233-RT	SSY	167 - 44
PR234-RT	SSY	171 -181
PR235-RT	SSY	173 - 66
PR236-RT	SSY	175 -129
PR237-RT	SSY	180 -106
PR238-RT	SSY	182 - 89
PR239-RT	SSY	185 -121
PR240-RT	SSY	187 -181
PR241-RT	SSY	189 - 93
PR242-RT	SSY	191 - 62
PR243-RT	SSY	192 - 80
PR244-RT	SSY	194 - 8
PR245-RT	SSY	195 - 61
PR246-RT	SSY	197 - 62
PR247-RT	SSY	197 -184
PR248-RT	SSY	203 -161
PR249-RT	SSY	204 -150
PR250-RT	SSY	205 - 99
PR251-RT	SSY	206 - 89
PR252-RT	SSY	208 -118
PR253-RT	SSY	214 -148
PR254-RT	SSY	216 - 32
PR255-RT	SSY	218 -174
PR256-RT	SSY	221 - 77
PR258-RT	SSY	425 -211
PR259-RT	SSY	428 - 22
PR260-RT	SSY	428 -177
PR265-RT	SSY	438 - 57
PR266-RT	SSY	438 - 58
PR267-RT	SSY	439 - 96
PR268-RT	SSY	438 - 59
PR269-RT	SSY	438 - 60
PR270-RT	SSY	445 - 77
PR275-RT	SSY	430 -220
PR280-RT	SSY	444 -107
PR292-RT	SSY	445 - 78
PR293-RT	SSY	444 -108
PR295-RT	SSY	402 - 91
PR296-RT	SSY	445 - 79
PR332-RT	SSY	293 - 56
PR333-RT	SSY	293 - 57
PR334-RT	SSY	299 -183
PR335-RT	SSY	299 -184
PR339-RT	SSY	445 - 80
PR340-RT	SSY	445 - 81
PR345-RT	SSY	445 - 82
PR346-RT	SSY	403 -191
PR347-RT	SSY	302 - 51
PR1002	DGE	258 - 71
PR1004	DGE	260 - 32
PR1005	DGE	260 -209
PR1006	DGE	255 -199
	♦FEC	
PR1007	DGE	256 - 50
	♦FEC	
PR3001	♦FEC	252 - 94
PR3002	DGE	258 - 72
	♦FEC	
PR3003	♦FEC	254 - 53
PR3004	DGE	260 - 33
	♦FEC	
PR3005	DGE	260 -210
	♦FEC	
PR3006	♦FEC	255 -200
PR3007	DGE	261 -140
	♦FEC	
PR5400	♦ITTG	297 -108
PR5401	♦ITTG	297 -134
PR5402	♦ITTG	297 -150
PR5403	♦ITTG	297 -160
PR5404	♦ITTG	297 -184
PR5405	♦ITTG	297 -194
PR5406	♦ITTG	297 -213
PR5407	♦ITTG	403 -109
PR5408	♦ITTG	408 -213
PS1132	TRWS	429 - 34
PS1140	TRWS	401 - 51
PS1141	TRWS	411 - 9
PS1142	TRWS	414 -213
PS1143	TRWS	419 - 80
PS1144	TRWS	421 -166
PS1145	TRWS	423 -106
PS1146	TRWS	424 -157
PS1147	TRWS	426 - 28
PS1148	TRWS	427 - 55
PS1171,A	TRWS	163 - 82
PS1172,A	TRWS	163 - 96
PS1173,A	TRWS	163 - 98
PS1174,A	TRWS	163 -165
PS1175,A	TRWS	164 - 11
PS1176,A	TRWS	164 -106
PS1177,A	TRWS	165 - 39
PS1200	♦TRWS	183 - 6
PS1200A	TRWS	183 - 7
PS1200B	TRWS	183 - 8
PS1201	♦TRWS	183 - 9
PS1201A	TRWS	183 - 10
PS1201B	TRWS	183 - 11
PS1202	♦TRWS	183 - 12
PS1202A	TRWS	183 - 13
PS1202B	TRWS	183 - 14
PS1203	♦TRWS	183 - 15
PS1203A	TRWS	183 - 16
PS1203B	TRWS	183 - 17
PS1204	♦TRWS	183 - 18
PS1204A	TRWS	183 - 19
PS1204B	TRWS	183 - 20
PS1205	♦TRWS	183 - 21
PS1205A	♦TRWS	183 - 22
PS1205B	♦TRWS	183 - 23
PS1207	♦TRWS	183 - 24
PS1207A	♦TRWS	183 - 25
PS1207B	♦TRWS	183 - 26
PS1215	♦TRWS	184 - 87
PS1215A	♦TRWS	184 - 88
PS1215B	♦TRWS	184 - 89
PS1215C	♦TRWS	184 - 90
PS1300	TRWS	177 - 38
PS1300A	TRWS	177 - 39
PS1301	TRWS	177 - 40
PS1301A	TRWS	177 - 41
PS1302	TRWS	177 - 42
PS1302A	TRWS	177 - 43
PS1303	TRWS	177 - 44
PS1303A	TRWS	177 - 45
PS1304	TRWS	177 - 46
PS1304A	TRWS	177 - 47
PS1305	TRWS	177 - 48
PS1305A	TRWS	177 - 49
PS1306	TRWS	177 - 50
PS1306A	TRWS	177 - 51
PS1307	TRWS	177 - 52
PS1307A	TRWS	177 - 53
PS1308	TRWS	177 - 54
PS1308A	TRWS	177 - 55
PS1309	TRWS	177 - 56
PS1309A	TRWS	177 - 57
PS1310	TRWS	177 - 58
PS1310A	TRWS	177 - 59
PS1311	TRWS	177 - 60
PS1311A	TRWS	177 - 61
PS1312	TRWS	177 - 62
PS1312A	TRWS	177 - 63
PS1313	TRWS	177 - 64
PS1313A	TRWS	177 - 65
PS1314	TRWS	177 - 66
PS1314A	TRWS	177 - 67
PS1325	♦TRWS	175 - 63
PS1441	TRWS	411 - 40
PS1442	TRWS	415 - 26
PS1443	TRWS	419 -110
PS1444	TRWS	421 -194
PS1445	TRWS	423 -135
PS1446	TRWS	424 -184
PS1447	TRWS	425 - 82
PS1448	TRWS	426 - 54
PS1449	TRWS	426 -163
PS1450	TRWS	427 - 82
PS1451	TRWS	428 - 12
PS1452	TRWS	428 - 85
PS1453	TRWS	428 -169
PS1454	TRWS	428 -205
PS1455	TRWS	429 - 57
PS1456	TRWS	429 -201
PS1457	TRWS	430 - 21
PS1458	TRWS	430 - 59
PS1459	TRWS	430 - 79
PS1460	TRWS	430 -151
PS1501	TRWS	183 - 37
PS1501A	TRWS	183 - 38
PS1502	TRWS	197 - 82
PS1502A	TRWS	197 - 83
PS1503	TRWS	204 -130
PS1503A	TRWS	204 -131
PS1504	TRWS	209 - 31
PS1504A	TRWS	209 - 32
PS1505	TRWS	211 -141
PS1505A	TRWS	211 -142
PS1506	TRWS	213 -172
PS1506A	TRWS	213 -173
PS1507	TRWS	215 -135
PS1507A	TRWS	215 -136
PS1508	TRWS	216 -134
PS1508A	TRWS	216 -135
PS1509	TRWS	218 - 97
PS1509A	TRWS	218 - 98
PS1510	TRWS	219 - 70
PS1510A	TRWS	219 - 71
PS1511	TRWS	186 -178
PS1512	TRWS	186 -179
PS1513	TRWS	186 -180
PS1514	TRWS	186 -181
PS1515	TRWS	186 -182
PS1516	TRWS	186 -183
PS1517	TRWS	186 -184
PS1850	♦TRWS	415 - 15
PS1851	♦TRWS	421 -190
PS1852	♦TRWS	423 -143
PS1853	♦TRWS	424 -189
PS2207	TRWS	232 - 2
PS2208	TRWS	232 - 3
PS2209	TRWS	232 - 4
PS2345	TRWS	284 - 42
PS2346	TRWS	284 -185
PS2347	TRWS	402 - 49
PS2348	TRWS	411 - 87
PS2349	TRWS	415 - 55
PS2350	TRWS	417 -160
PS2351	TRWS	419 -134
PS2352	TRWS	420 -194
PS2353	TRWS	421 -205
PS2354	TRWS	422 -209
PS2355	TRWS	423 -163
PS2356	TRWS	424 -198
PS2357	TRWS	425 - 89
PS2358	TRWS	426 - 63
PS2359	TRWS	426 -167
PS2360	TRWS	427 - 93
PS2411	TRWS	275 - 40
PS2412	TRWS	274 -197
PS2413	TRWS	274 -138
PS2414	TRWS	274 -157
PS2415	TRWS	274 -171
PS2416	TRWS	274 -180
PS2417	TRWS	401 - 29
PS2418	TRWS	410 -219
PS2419	TRWS	414 -203
PS2422	TRWS	414 -185
PS2423	TRWS	419 - 62
PS2424	TRWS	421 -146
PS2425	TRWS	423 - 91
PS2426	TRWS	424 -144
PS2427	TRWS	425 - 70
PS2428	TRWS	426 - 24
PS2429	TRWS	426 -156
PS2430	TRWS	427 - 49
PS4559	TRWS	235 -163
PS4560	TRWS	236 -140
PS4725	TRWS	234 - 96
PS5300	♦TRWS	236 -141
PS5301	♦TRWS	236 -142
PS5302	♦TRWS	236 -143
PS5303	♦TRWS	236 -144
PS5304	♦TRWS	236 -145
PS5570	♦TRWS	435 - 50
PS5830	♦TRWS	435 - 51
PS5831	♦TRWS	435 - 52
PS5832B	♦TRWS	435 - 53
PS6319,A	TRWS	206 - 75
PS6320,A	♦TRWS	209 - 51
PS6321,A	♦TRWS	211 -139
PS6322	♦TRWS	213 -142
PS6323	♦TRWS	215 -134
PS6324	♦TRWS	217 -126
PS6325	♦TRWS	218 -153
PS6326	♦TRWS	221 - 20
PS6327	♦TRWS	222 -127
PS6465	♦TRWS	164 -118
PS6466	♦TRWS	166 -125
PS6467	♦TRWS	169 -112
PS6468	♦TRWS	170 -180
PS6469	♦TRWS	173 -158
PS6470	♦TRWS	179 - 63
PS7267	TRWS	242 -196
PS7268	TRWS	242 -197
PS7269	TRWS	242 -202
PS7270	TRWS	243 - 47
PS8900	♦TRWS	165 -108
PS8901	♦TRWS	166 - 40
PS8902	♦TRWS	167 - 6
PS8903	♦TRWS	167 -183
PS8904	♦TRWS	168 -207
PS8905	♦TRWS	170 - 41
PS8906	♦TRWS	171 -122
PS8907	♦TRWS	172 -211
PS8908	♦TRWS	175 - 64
PS8909	♦TRWS	178 - 33
PS8910	♦TRWS	180 - 32
PS8911	♦TRWS	182 - 10
PS8912	♦TRWS	185 - 45
PS8913	♦TRWS	187 - 91
PS8914	♦TRWS	189 - 32
PS8915	♦TRWS	190 -204
PS8916	♦TRWS	192 -169
PS8917	♦TRWS	194 -189
PS8918	♦TRWS	196 - 99
PS8919	♦TRWS	198 -103
PS10016B	♦TRWS	178 -112
PS10017B	♦TRWS	180 -107
PS10018B	♦TRWS	182 - 90
PS10019B	♦TRWS	185 -122
PS10020B	♦TRWS	187 -182
PS10021B	♦TRWS	189 - 94
PS10022B	♦TRWS	191 - 63
PS10023B	♦TRWS	193 - 12
PS10024B	♦TRWS	195 - 62
PS10025B	♦TRWS	196 -155
PS10026B	♦TRWS	198 -171
PS10060	♦TRWS	178 -113
PS10061	♦TRWS	180 -108
PS10062	♦TRWS	182 - 91
PS10063	♦TRWS	185 -123
PS10064	♦TRWS	187 -183
PS10065	♦TRWS	189 - 95
PS10066	♦TRWS	191 - 64
PS10067	♦TRWS	193 - 13
PS10068	♦TRWS	195 - 63
PS10069	♦TRWS	196 -156
PS10070	♦TRWS	198 -172
PSZ9.1	♦SELI	381 - 11
PSZ12	♦SELI	382 -126
PSZ15	♦SELI	384 - 10
PSZ16	♦SELI	384 -109
PSZ24	♦SELI	387 - 44
PSZ27	♦SELI	387 -186
PSZ33	♦SELI	389 - 10
PTC201	♦MAL	281 - 53
PTC202	♦MAL	281 -171
PTC203	♦MAL	401 -169
PTC204	♦MAL	402 -159
PTC205	♦MAL	402 -135
PTC206	MAL	231 -183
PTC206M	MAL	231 -184
PTC207	MAL	231 -185
PTC207M	MAL	231 -186
PTC208	MAL	444 -109
PTC209	♦MAL	274 - 50
PTC210	MAL	231 -150
PTC211	MAL	231 -151
PTC212	MAL	231 -152
PTC213	MAL	231 -153
PTC214	MAL	232 - 44
PTC216	MAL	232 - 67
PTC217	MAL	439 - 97
PTC218	MAL	232 - 52
PTC219	MAL	432 -213
PTC301	♦MAL	442 - 68
PTC302	MAL	442 - 69
PTC401	MAL	363 - 27
PTC402	MAL	363 -122
PTC403	MAL	444 -110
PTC404	MAL	445 - 1
PTC405	MAL	445 - 2
PTC406	MAL	445 - 3
PTC501	MAL	166 -158
PTC502	MAL	172 -126
PTC503	MAL	174 - 99
PTC504	MAL	179 -158
PTC505	MAL	184 -187
PTC506	MAL	187 - 7
PTC507	MAL	190 -132
PTC508	MAL	192 -100
PTC509	MAL	194 -133
PTC510	MAL	198 - 43
PTC511	MAL	204 -193
PTC512	MAL	208 - 1
PTC513	MAL	214 -168
PTC514	MAL	215 -170
PTC515	MAL	218 -128
PTC516	MAL	221 - 41
PTC517	MAL	210 -136
PTC518	MAL	212 -169
PTC601	MAL	445 - 83
PTC602	MAL	445 - 4
PTC603	MAL	445 - 84
PW08	♦MEHK	366 -159
PW-01	♦MEHK	366 - 49
PW-02	♦MEHK	366 - 75
PW-04	♦MEHK	366 -104
PW-005	♦MEHK	366 - 25
PW-06	♦MEHK	366 -132
PY55-350	THEF	259 -213
PY55-600	THEF	260 -216
PY126	THEF	282 - 13
PY127	THEF	406 - 58
PY206	THEF	247 -155
PY207	THEF	247 -180
PY208-800	THEF	251 -144
PY208-1000	THEF	251 -146
PY210-400	THEF	247 -156
PY210-600	THEF	247 -181
PY210-800	THEF	247 -195
PZD16	THEF	328 - 51
PZD36	THEF	328 - 52
PZD62	THEF	328 - 53
PZD160	THEF	328 - 54
Q1-100	♦IDC	243 -119
Q1-100A	♦IDC	243 -120
Q1-100B	♦IDC	243 -121
Q1-100C	♦IDC	243 -122
Q1-100D	♦IDC	243 -123
Q1-100E	♦IDC	243 -124
Q1-100T	♦IDC	243 -125
Q1-200	♦IDC	243 -126
Q1-200A	♦IDC	243 -127
Q1-200B	♦IDC	243 -128
Q2-100	♦IDC	243 -136
Q2-100A	♦IDC	243 -137
Q2-100B	♦IDC	243 -138
Q2-100C	♦IDC	243 -139
Q2-100D	♦IDC	243 -140
Q2-100E	♦IDC	243 -141
Q2-100T	♦IDC	243 -142
Q2-200	♦IDC	243 -143
Q2-200A	♦IDC	243 -144
Q2-200B	♦IDC	243 -145
Q3-90T	♦IDC	243 -165
Q3-100T	♦IDC	243 -166
Q3-200	♦IDC	243 -154
Q3-200A	♦IDC	243 -155
Q3-200B	♦IDC	243 -156
Q3-200C	♦IDC	243 -157
Q3-200D	♦IDC	243 -158
Q3-200E	♦IDC	243 -159
Q3-200T	♦IDC	243 -160
Q3-300	♦IDC	243 -161
Q3-300A	♦IDC	243 -162
Q3-300B	♦IDC	243 -163
Q3-500	♦IDC	243 -167
Q4-100	IDC	241 - 44
Q4-500	IDC	241 - 45
Q05B	♦HITJ	444 - 57
Q05C	♦HITJ	444 - 58
Q05D	♦HITJ	444 - 59
Q5-100	♦IDC	243 -175
Q5-100A	♦IDC	243 -176
Q5-100B	♦IDC	243 -177
Q5-100C	♦IDC	243 -178
Q5-100D	♦IDC	243 -179
Q5-100E	♦IDC	243 -180
Q5-100T	♦IDC	243 -181
Q5-200	♦IDC	243 -182
Q5-200A	♦IDC	243 -183
Q5-200B	♦IDC	243 -184
Q5-200C	♦IDC	243 -185
Q5-200D	♦IDC	243 -186
Q5-200E	♦IDC	243 -187
Q5-200T	♦IDC	243 -188
Q5-250	♦IDC	241 - 46
Q5-300	♦IDC	243 -189
Q5-300A	♦IDC	243 -190
Q5-300B	♦IDC	243 -191
Q5-500	♦IDC	243 -215
Q06B	♦HITJ	444 - 60
Q06C	♦HITJ	444 - 61
Q06D	♦HITJ	444 - 62
Q6-100	♦IDC	243 -200
Q6-100A	♦IDC	243 -201
Q6-100B	♦IDC	243 -202
Q6-100C	♦IDC	243 -203
Q6-100D	♦IDC	243 -204
Q6-100E	♦IDC	243 -205
Q6-100F	♦IDC	243 -206
Q6-100G	♦IDC	243 -207
Q6-100H	♦IDC	243 -208
Q6-100I	♦IDC	243 -210
Q6-100J	♦IDC	243 -211
Q6-100K	♦IDC	243 -212
Q6-100L	♦IDC	243 -213
Q6-100T	♦IDC	243 -209
Q6-200	♦IDC	243 -216
Q6-200A	♦IDC	243 -217
Q6-200B	♦IDC	243 -218
Q6-200C	♦IDC	243 -219
Q6-200D	♦IDC	243 -220
Q6-200E	♦IDC	244 - 1
Q6-200F	♦IDC	244 - 2
Q6-200G	♦IDC	244 - 3
Q6-200H	♦IDC	244 - 4
Q6-200I	♦IDC	244 - 5
Q6-200J	♦IDC	244 - 6
Q6-200K	♦IDC	244 - 7
Q6-200L	♦IDC	244 - 8
Q6-200T	♦IDC	244 - 9
Q6-250	IDC	241 - 47
Q6-300	♦IDC	244 - 10
Q6-300A	♦IDC	244 - 11
Q6-300B	♦IDC	244 - 12
Q6-400	♦IDC	244 - 13
Q6-400A	♦IDC	244 - 14
Q6-400B	♦IDC	244 - 15
Q6-500	IDC	241 - 48
Q7-050	♦IDC	243 -199
Q7-100	♦IDC	243 -214
Q7-250	♦IDC	244 - 16
Q8-200	♦IDC	244 - 25
Q8-200A	♦IDC	244 - 26
Q8-200B	♦IDC	244 - 27
Q8-200C	♦IDC	244 - 28
Q8-200D	♦IDC	244 - 29
Q8-200T	♦IDC	244 - 30
Q8-300	♦IDC	244 - 31
Q8-300A	♦IDC	244 - 32
Q8-300B	♦IDC	244 - 33
Q10-100	IDC	244 - 48
Q10-100T	IDC	244 - 49
Q10-200	♦IDC	244 - 57
Q10-200A	♦IDC	244 - 58
Q10-200B	♦IDC	244 - 59
Q10-200C	♦IDC	244 - 60
Q10-200D	♦IDC	244 - 61
Q10-200T	♦IDC	244 - 62
Q10-250	IDC	241 - 49
Q10-300	♦IDC	244 - 63
Q10-300A	♦IDC	244 - 64
Q10-300B	♦IDC	244 - 65
Q10-500	♦IDC	244 - 66
Q10-750	IDC	241 - 50
Q10-950	IDC	241 - 51
Q12-200	♦IDC	244 - 77
Q12-200A	♦IDC	244 - 78
Q12-200B	♦IDC	244 - 79
Q12-200C	♦IDC	244 - 80
Q12-200D	♦IDC	244 - 81
Q12-200T	♦IDC	244 - 82
Q12-300	♦IDC	244 - 83
Q12-300A	♦IDC	244 - 84
Q12-300B	♦IDC	244 - 85
Q15-200	♦IDC	244 -103
Q15-200A	♦IDC	244 -104
Q15-200B	♦IDC	244 -105
Q15-200C	♦IDC	244 -106
Q15-200D	♦IDC	244 -107
Q15-200T	♦IDC	244 -108
Q15-300	♦IDC	244 -109
Q15-300A	♦IDC	244 -110
Q15-300B	♦IDC	244 -111
Q18-200	♦IDC	244 -128
Q18-200A	♦IDC	244 -129
Q18-200B	♦IDC	244 -130
Q18-200C	♦IDC	244 -131
Q18-200D	♦IDC	244 -132
Q18-200T	♦IDC	244 -133
Q18-300	♦IDC	244 -134
Q18-300A	♦IDC	244 -135
Q18-300B	♦IDC	244 -136
Q19C	♦HITJ	297 -154
Q19D	♦HITJ	297 -170
Q19E	♦HITJ	297 -186
Q19G	♦HITJ	297 -220
Q19J	♦HITJ	403 -113
Q19L	♦HITJ	406 -198
Q20-200	♦IDC	244 -157
Q20-200A	♦IDC	244 -158
Q20-200T	♦IDC	244 -159
Q20-300	♦IDC	244 -160
Q20-300A	♦IDC	244 -161
Q20-300B	♦IDC	244 -162
Q20-500	IDC	241 - 52
Q20-750	IDC	241 - 53
Q20-950	IDC	241 - 54

Δ-Registered with JEDEC by this manufacturer

♦-Mfr's data sheet available in microfilm service

1. TYPE No. CROSS INDEX

IN TYPE NUMBER SEQUENCE

TYPE No.	MFRS	Pg&Line	TYPE No.	MFRS	Pg&Line	TYPE No.	MFRS	Pg&Line	TYPE No.	MFRS	Pg&Line	TYPE No.	MFRS	Pg&Line
Q20C	♦HITJ	297 -155	QE116H1	♦HITJ	370 -186	R9G0102200	♦PRX	405 - 47	R250-B	♦MEHK	291 -148	R3100812	PRX	295 -175
Q20D	♦HITJ	297 -171	QG114H1	♦HITJ	370 -204	R9G0121300	♦PRX	408 -145	R250-D	♦MEHK	291 -198	R3100816	PRX	297 - 45
Q20E	♦HITJ	297 -187	QG116H1	♦HITJ	370 -205	R9G0121800	♦PRX	408 -155	R250-F	♦MEHK	292 - 15	R3100912	PRX	295 -184
Q20G	♦HITJ	298 - 1	QJ114H1	♦HITJ	370 -217	R9G0122200	♦PRX	408 -162	R250-H	♦MEHK	292 - 45	R3100916	PRX	297 - 47
Q20J	♦HITJ	403 -114	QJ116H1	♦HITJ	370 -218	R9G0141300	♦PRX	410 -175	R250-K	♦MEHK	292 - 82	R3101012	PRX	403 - 75
Q20L	♦HITJ	406 -199	R5D00110WC	PRX	305 -201	R9G0141800	♦PRX	410 -186	R250-M	♦MEHK	292 -104	R3101016	PRX	403 -103
Q30-200	♦IDC	245 - 45	R5D00115WA	PRX	307 - 59	R9G0142200	♦PRX	410 -191	R250P	♦MEHK	292 -141	R3110012	PRX	294 -195
Q30-200A	♦IDC	245 - 46	R5D00210WC	PRX	306 - 8	R9G0161300	♦PRX	413 -115	R250S	♦MEHK	292 -156	R3110016	PRX	296 -190
Q30-300	♦IDC	245 - 47	R5D00215WA	PRX	307 - 88	R9G0161800	♦PRX	413 -125	R305	SLCB	296 - 28	R3110112	PRX	295 - 5
Q30-300A	♦IDC	245 - 48	R5D00310WC	PRX	306 - 24	R9G0162200	♦PRX	413 -133	R310	SLCB	296 - 44	R3110116	PRX	296 -203
Q30-300B	♦IDC	245 - 49	R5D00315WA	PRX	307 -125	R9G0181300	♦PRX	414 -111	R320	SLCB	296 - 77	R3110212	PRX	295 - 40
Q30-500	♦IDC	245 - 32	R5D00410WC	PRX	306 - 70	R9G0181800	♦PRX	414 -120	R400	CODI	281 -120	R3110216	PRX	296 -218
Q30-500A	♦IDC	245 - 33	R5D00415WA	PRX	307 -154	R9G0182200	♦PRX	414 -128	R600	CODI	282 - 10	R3110312	PRX	295 - 63
Q30-750	IDC	241 - 55	R5D00510WC	PRX	306 - 85	R9G0201300	♦PRX	415 -213	R622	♦VARO	301 - 40	R3110316	PRX	297 - 4
Q30-950	IDC	241 - 56	R5D00515WA	PRX	307 -185	R9G0201800	♦PRX	416 - 5	R624	♦VARO	301 - 42	R3110412	PRX	295 - 93
Q40-200	♦IDC	241 - 30	R5D00610WC	PRX	306 -121	R9G0202200	♦PRX	416 - 14	R626	♦VARO	301 - 44	R3110416	PRX	297 - 15
Q40-200A	♦IDC	245 -127	R5D00615WA	PRX	307 -201	R9G0221300	♦PRX	416 -133	R628	♦VARO	301 - 46	R3110512	PRX	295 -112
Q40-300	♦IDC	245 -128	R5D00710WC	PRX	306 -130	R9G0241300	♦PRX	417 - 71	R631	♦VARO	301 - 39	R3110516	PRX	297 - 20
Q40-300A	♦IDC	245 -129	R5D00715WA	PRX	308 - 10	R9G0261300	♦PRX	418 -103	R632	♦VARO	301 - 41	R3110612	PRX	295 -141
Q40-300B	♦IDC	245 -130	R5D00810WC	PRX	306 -175	R9G0281300	♦PRX	418 -210	R634	♦VARO	301 - 43	R3110616	PRX	297 - 31
Q40-500	♦IDC	245 -124	R5D00815WA	PRX	308 - 24	R9G0301300	♦PRX	420 - 13	R636	♦VARO	301 - 45	R3110712	PRX	295 -150
Q40-500A	♦IDC	245 -125	R5D00910WC	PRX	306 -181	R9G20109AJ00	♦PRX	268 -187	R638	♦VARO	301 - 47	R3110716	PRX	297 - 35
Q40-750	IDC	241 - 57	R5D00915WA	PRX	308 - 51	R9G20109CJ00	♦PRX	268 -181	R702	♦VARO	296 - 94	R3110812	PRX	295 -176
Q40-950	IDC	241 - 58	R5D01010WC	PRX	404 - 79	R9G20111AJ00	♦PRX	268 -188	R704	♦VARO	296 -137	R3110816	PRX	297 - 32
Q50-200	♦IDC	245 -194	R5D01015WA	PRX	404 - 90	R9G20111CJ00	♦PRX	268 -182	R705	♦SLCB	296 - 29	R3110912	PRX	295 -185
Q50-200A	♦IDC	245 -195	R7S00108XX00	♦PRX	269 -116	R9G20114AJ00	♦PRX	268 -189	R706	♦VARO	296 -163	R3110916	PRX	297 - 48
Q50-300	♦IDC	245 -196	R7S00112XX00	♦PRX	268 -193	R9G20114CJ00	♦PRX	268 -183	R710	♦SLCB	296 - 45	R3111012	PRX	403 - 76
Q50-300A	♦IDC	245 -197	R7S00116XX00	♦PRX	268 -194	R9G20209AJ00	♦PRX	269 - 8	R710X	♦MOTA	272 - 67	R3111016	PRX	403 -104
Q50-300B	♦IDC	245 -198	R7S00208XX00	♦PRX	269 - 14	R9G20209CJ00	♦PRX	269 - 2	R710XPT	♦MOTA	272 - 66	R3400006	♦PRX	291 -106
Q50-500	♦IDC	245 -199	R7S00212XX00	♦PRX	269 - 15	R9G20211AJ00	♦PRX	269 - 9	R711	VARO	296 - 58	R3400106	♦PRX	291 -149
Q50-500A	♦IDC	245 -200	R7S00216XX00	♦PRX	269 - 16	R9G20211CJ00	♦PRX	269 - 3	R711X	♦MOTA	258 - 93	R3400206	♦PRX	291 -199
Q50-750	IDC	241 - 59	R7S00408XX00	♦PRX	269 - 46	R9G20214AJ00	♦PRX	269 - 10		♦VARO		R3400306	♦PRX	292 - 16
Q50-950	IDC	241 - 60	R7S00412XX00	♦PRX	269 - 47	R9G20214CJ00	♦PRX	269 - 4	R711XPT	♦MOTA	272 - 78	R3400406	♦PRX	292 - 46
Q60-500	♦IDC	246 - 32	R7S00416XX00	♦PRX	269 - 48	R9G20409AJ00	♦PRX	269 - 39	R712	♦VARO	296 - 95	R3400506	♦PRX	292 - 83
Q60-500A	♦IDC	246 - 33	R7S00608XX00	♦PRX	269 - 80	R9G20409CJ00	♦PRX	269 - 31	R712X	♦MOTA	259 - 91	R3400606	♦PRX	292 -105
Q60-750	IDC	241 - 61	R7S00612XX00	♦PRX	269 - 81	R9G20411AJ00	♦PRX	269 - 40		♦VARO		R3400806	♦PRX	292 -157
Q60-950	IDC	241 - 62	R7S00616XX00	♦PRX	269 - 82	R9G20411CJ00	♦PRX	269 - 32	R712XPT	♦MOTA	272 - 98	R3401006	♦PRX	403 - 3
Q69-X1	♦SIEG	440 - 13	R7S00808XX00	♦PRX	269 -117	R9G20412CS00	♦PRX	269 - 33	R714	♦VARO	296 -138	R4020020NW	♦PRX	257 -172
Q69-X2	♦SIEG	440 - 14	R7S00812XX00	♦PRX	269 -118	R9G20414AJ00	♦PRX	269 - 41	R714X	♦MOTA	260 - 58	R4020030NW	♦PRX	257 -173
Q69-X3	♦SIEG	440 - 15	R7S00816XX00	♦PRX	269 -119	R9G20414CJ00	♦PRX	269 - 34		♦VARO		R4020120NW	♦PRX	258 - 95
Q69-X101	♦SIEG	440 - 16	R7S01008XX00	♦PRX	270 - 14	R9G20415AS00	♦PRX	269 - 42	R714XPT	♦MOTA	272 -109	R4020130NW	♦PRX	258 - 96
Q69-X102	♦SIEG	440 - 17	R7S01012XX00	♦PRX	270 - 15	R9G20609AJ00	♦PRX	269 - 73	R716	♦VARO	296 -164	R4020220NW	♦PRX	259 - 93
Q69-X103	♦SIEG	440 - 18	R7S01016XX00	♦PRX	270 - 16	R9G20609CJ00	♦PRX	269 - 65	R716X	♦VARO	260 -192	R4020230NW	♦PRX	259 - 94
Q69-X106	♦SIEG	440 - 19	R7S01208XX00	♦PRX	270 - 50	R9G20611AJ00	♦PRX	269 - 74	R720	♦SLCB	296 - 78	R4020320NW	♦PRX	259 -196
Q69-X111	♦SIEG	440 - 20	R7S01212XX00	♦PRX	270 - 51	R9G20611CJ00	♦PRX	269 - 66	R730	♦VARO	301 - 92	R4020330NW	♦PRX	259 -197
Q69-X138	♦SIEG	440 - 21	R7S01216XX00	♦PRX	270 - 52	R9G20612CS00	♦PRX	269 - 67	R730X	♦VARO	301 - 93	R4020420NW	♦PRX	260 - 60
Q69-X141	♦SIEG	440 - 22	R7S01408XX00	♦PRX	270 - 81	R9G20614AJ00	♦PRX	269 - 75	R731	♦VARO	301 -106	R4020430NW	♦PRX	260 - 61
Q69-X142	♦SIEG	440 - 23	R7S01412XX00	♦PRX	270 - 82	R9G20614CJ00	♦PRX	269 - 68	R731X	♦VARO	301 -107	R4020520	♦PRX	263 -185
Q69-X144	♦SIEG	440 - 24	R7S01608XX00	♦PRX	270 -102	R9G20615AS00	♦PRX	269 - 76	R732	♦VARO	301 -128	R4020530	♦PRX	263 -186
Q69-X145	♦SIEG	440 - 25	R7S01612XX00	♦PRX	270 -103	R9G20809AJ00	♦PRX	269 -109	R732X	♦VARO	301 -129	R4020530NW	♦PRX	260 -127
Q69-X151	♦SIEG	440 - 26	R7S01808XX00	♦PRX	270 -117	R9G20809CJ00	♦PRX	269 -101	R734	♦VARO	301 -175	R4020620	♦PRX	263 -189
Q69-X152	♦SIEG	440 - 27	R7S01812XX00	♦PRX	270 -118	R9G20811AJ00	♦PRX	269 -110	R740	♦SLCB	296 -116	R4020630	♦PRX	263 -190
Q69-X153	♦SIEG	440 - 28	R7S02008XX00	♦PRX	271 - 4	R9G20811CJ00	♦PRX	269 -102	R760	♦SLCB	296 -151	R4020630NW	♦PRX	260 -194
Q69-X154	♦SIEG	440 - 29	R7S02012XX00	♦PRX	271 - 5	R9G20812CS00	♦PRX	269 -103	R780	SLCB	296 -170	R4040060	♦PRX	303 - 75
Q69-X157	♦SIEG	440 - 30	R7S02208XX00	♦PRX	271 - 19	R9G20814AJ00	♦PRX	269 -111	R800	CODI	282 - 94	R4040070	♦PRX	304 - 20
Q69-X201	♦SIEG	440 - 31	R7S02212XX00	♦PRX	271 - 20	R9G20814CJ00	♦PRX	269 -104	R1000	CODI	402 - 7	R4040160	♦PRX	303 - 94
Q69-X202	♦SIEG	440 - 32	R7S20407ES00	PRX	269 - 23	R9G20815AS00	♦PRX	269 -112	R1200	♦DII	405 -216	R4040170	♦PRX	304 - 39
Q69-X215	♦SIEG	440 - 33	R7S20408CS00	PRX	269 - 30	R9G21009AJ00	♦PRX	270 - 8		♦RECT		R4040260	♦PRX	303 -113
Q69-X216	♦SIEG	440 - 34	R7S20409HS00	♦PRX	269 - 21	R9G21009CJ00	♦PRX	270 - 1	R1200F	♦DII	256 - 91	R4040270	♦PRX	304 - 71
Q69-X217	♦SIEG	440 - 35	R7S20410ES00	♦PRX	269 - 24	R9G21011AJ00	♦PRX	270 - 9		♦RECT		R4040360	♦PRX	303 -133
Q69-X223	♦SIEG	440 - 36	R7S20607ES00	PRX	269 - 57	R9G21011CJ00	♦PRX	270 - 2	R1500	♦DII	411 - 37	R4040370	♦PRX	304 - 91
Q69-X224	♦SIEG	440 - 37	R7S20608CS00	PRX	269 - 64	R9G21012CS00	♦PRX	270 - 3		♦RECT		R4040460	♦PRX	303 -159
Q69-X225	♦SIEG	440 - 38	R7S20609HS00	♦PRX	269 - 55	R9G21014AJ00	♦PRX	270 - 10	R1500F	♦DII	256 -115	R4040470	♦PRX	304 -117
Q69-X226	♦SIEG	440 - 39	R7S20610ES00	♦PRX	269 - 58	R9G21014CJ00	♦PRX	270 - 4		♦RECT		R4040560	♦PRX	303 -173
Q69-X227	♦SIEG	440 - 40	R7S20709HS00	♦PRX	269 - 87	R9G21015AS00	♦PRX	270 - 11	R1800	♦DII	413 -202	R4040570	♦PRX	304 -134
Q69-X238	♦SIEG	440 - 41	R7S20710ES00	♦PRX	269 - 89	R9G21209AJ00	♦PRX	270 - 43		♦RECT		R4040660	♦PRX	303 -190
Q69-X241	♦SIEG	440 - 42	R7S20807ES00	PRX	269 - 93	R9G21209CJ00	♦PRX	270 - 35	R1800F	♦DII	256 -130	R4040670	♦PRX	304 -156
Q69-X243	♦SIEG	440 - 43	R7S20808CS00	PRX	269 -100	R9G21211AJ00	♦PRX	270 - 44		♦RECT		R4040860	♦PRX	303 -209
Q69-X244	♦SIEG	440 - 44	R7S20809HS00	♦PRX	269 - 91	R9G21211CJ00	♦PRX	270 - 36	R2000#E	♦DII	415 - 23	R4040870	♦PRX	304 -188
Q69-X245	♦SIEG	440 - 45	R7S20810ES00	♦PRX	269 - 94	R9G21212CS00	♦PRX	270 - 37		♦RECT		R4041060	♦PRX	403 -218
Q69-X247	♦SIEG	440 - 46	R7S20909HS00	♦PRX	269 -124	R9G21214AJ00	♦PRX	270 - 45	R2000F	♦DII	256 -143	R4041070	♦PRX	404 - 16
Q69-X248	♦SIEG	440 - 47	R7S20910ES00	♦PRX	269 -126	R9G21214CJ00	♦PRX	270 - 38		♦RECT		R4100025	PRX	298 -128
Q69-X249	♦SIEG	440 - 48	R7S21008CS00	PRX	269 -135	R9G21215AS00	♦PRX	270 - 46	R2500	♦DII	417 -136	R4100040	PRX	301 -100
Q69-X250	♦SIEG	440 - 49	R7S21009HS00	♦PRX	269 -128	R9G21409AJ00	♦PRX	270 - 75		♦RECT		R4100125	PRX	298 -162
Q69-X251	♦SIEG	440 - 50	R7S21010ES00	♦PRX	269 -130	R9G21411AJ00	♦PRX	270 - 76	R2500F	♦DII	256 -163	R4100140	PRX	301 -120
Q69-X252	♦SIEG	440 - 51	R7S21109HS00	♦PRX	270 - 21	R9G21412CS00	♦PRX	270 - 70		♦RECT		R4100225	PRX	299 - 2
Q69-X253	♦SIEG	440 - 52	R7S21110ES00	♦PRX	270 - 23	R9G21415AS00	♦PRX	270 - 77	R3000	♦DII	419 -114	R4100240	PRX	301 -150
Q69-X353	♦SIEG	440 - 53	R7S21207ES00	PRX	270 - 27	R9G21609AJ00	♦PRX	270 - 96		♦RECT		R4100325	PRX	299 - 25
Q69-X355	♦SIEG	440 - 54	R7S21208CS00	PRX	270 - 34	R9G21611AJ00	♦PRX	270 - 97	R3000F	♦DII	256 -180	R4100340	PRX	301 -168
Q69-X356	♦SIEG	440 - 55	R7S21209HS00	♦PRX	270 - 25	R9G21612CS00	♦PRX	270 - 91		♦RECT		R4100425	PRX	299 - 75
Q69-X358	♦SIEG	440 - 56	R7S21210ES00	♦PRX	270 - 28	R9G21615AS00	♦PRX	270 - 98	R5000	♦DII	423 -151	R4100440	PRX	301 -195
Q69-X360	♦SIEG	440 - 57	R7S21309HS00	♦PRX	270 - 57	R9G21809AJ00	♦PRX	270 -113		♦RECT		R4100540	PRX	301 -206
Q69-X361	♦SIEG	440 - 58	R7S21310ES00	♦PRX	270 - 59	R9G21811AJ00	♦PRX	270 -114	R5000F	♦DII	256 -220	R4100640	PRX	302 - 12
Q69-X405	♦SIEG	440 - 59	R7S21407ES00	PRX	270 - 64	R9G21812CS00	♦PRX	270 -111		♦RECT		R4100840	PRX	302 - 41
Q69-X406	♦SIEG	440 - 60	R7S21408CS00	PRX	270 - 69	R9G21815AS00	♦PRX	270 -115	R3020106NW	♦PRX	258 - 94	R4101040	PRX	403 -189
Q69-X407	♦SIEG	440 - 61	R7S21409HS00	♦PRX	270 - 62	R9G22009AJ00	♦PRX	270 -128	R3020206NW	♦PRX	259 - 92	R4140060	PRX	303 - 78
Q69-X433	♦SIEG	440 - 62	R7S21410ES00	♦PRX	270 - 65	R9G22011AJ00	♦PRX	271 - 1	R3020306NW	♦PRX	259 -195	R4140070	PRX	304 - 23
Q69-X451	♦SIEG	440 - 63	R7S21607ES00	PRX	270 - 87	R9G22012CS00	♦PRX	270 -126	R3020406NW	♦PRX	260 - 59	R4140160	PRX	303 - 98
Q69-X452	♦SIEG	440 - 64	R7S21608CS00	PRX	270 - 90	R9G22015AS00	♦PRX	271 - 2	R3020506	♦PRX	263 - 60	R4140170	PRX	304 - 45
Q69-X453	♦SIEG	440 - 65	R7S21807ES00	PRX	270 -108	R9G22209AJ00	♦PRX	271 - 16	R3020506NW	♦PRX	260 -126	R4140260	PRX	303 -117
Q69-X454	♦SIEG	440 - 66	R7S21808CS00	PRX	270 -110	R9G22212CS00	♦PRX	271 - 14	R3020512	♦PRX	263 - 61	R4140270	PRX	304 - 76
Q69-X503	♦SIEG	440 - 67	R7S22007ES00	PRX	270 -123	R9G22215AS00	♦PRX	271 - 17	R3020606	♦PRX	263 - 62	R4140360	PRX	303 -137
Q69-X504	♦SIEG	440 - 68	R7S22008CS00	PRX	270 -125	R9G22409AJ00	♦PRX	271 - 24	R3020606NW	♦PRX	260 -193	R4140370	PRX	304 - 95
Q69-X551	♦SIEG	440 - 69	R7S22207ES00	PRX	271 - 11	R9G22412CS00	♦PRX	271 - 23	R3020612	♦PRX	263 - 63	R4140460	PRX	303 -163
Q69-X556	♦SIEG	440 - 70	R7S22208CS00	PRX	271 - 13	R9G22415AS00	♦PRX	271 - 25	R3030106NW	PRX	262 - 53	R4140470	PRX	304 -122
Q69-X558	♦SIEG	440 - 71	R7S22507ES00	PRX	271 - 29	R9G22609AJ00	♦PRX	271 - 35	R3030206NW	PRX	262 - 63	R4140560	PRX	303 -176
Q69-X559	♦SIEG	440 - 72	R7S22508CS00	PRX	271 - 31	R9G22612CS00	♦PRX	271 - 34	R3030306NW	PRX	262 - 71	R4140570	PRX	304 -138
Q69-X751	♦SIEG	440 - 73	R9G0011300	♦PRX	312 -195	R9G22615AS00	♦PRX	271 - 36	R3030406NW	PRX	262 - 78	R4140660	PRX	303 -194
Q69-X758	♦SIEG	440 - 74	R9G0011800	♦PRX	313 - 19	R9G22809AJ00	♦PRX	271 - 40	R3100012	PRX	294 -194	R4140670	PRX	304 -161
Q69-X759	♦SIEG	440 - 75	R9G0012200	♦PRX	313 - 61	R9G22812CS00	♦PRX	271 - 39	R3100016	PRX	296 -189	R4140760	PRX	303 -196
Q69-X789	♦SIEG	440 - 76	R9G0021300	♦PRX	312 -196	R9G22815AS00	♦PRX	271 - 41	R3100112	PRX	295 - 4	R4140770	PRX	304 -173
Q69-X790	♦SIEG	440 - 77	R9G0021800	♦PRX	313 - 20	R9G23009AJ00	♦PRX	271 - 45	R3100116	PRX	296 -202	R4140860	PRX	303 -212
Q69-X797	♦SIEG	440 - 78	R9G0022200	♦PRX	313 - 63	R9G23012CS00	♦PRX	271 - 44	R3100212	PRX	295 - 39	R4140870	PRX	304 -194
Q69-X798	♦SIEG	440 - 79	R9G0041300	♦PRX	312 -197	R9G23015AS00	♦PRX	271 - 46	R3100216	PRX	296 -217	R4140960	PRX	303 -213
Q69-X799	♦SIEG	440 - 80	R9G0041800	♦PRX	313 - 21	R9G23209AJ00	♦PRX	271 - 50	R3100312	PRX	295 - 62	R4140970	PRX	304 -201
Q69-X800	♦SIEG	440 - 81	R9G0042200	♦PRX	313 - 65	R9G23212CS00	♦PRX	271 - 49	R3100316	PRX	297 - 3	R4141060	PRX	404 - 1
Q69-X801	♦SIEG	440 - 82	R9G0061300	♦PRX	312 -198	R9G23215AS00	♦PRX	271 - 51	R3100412	PRX	295 - 92	R4141070	PRX	404 - 21
Q69-X802	♦SIEG	440 - 83	R9G0061800	♦PRX	313 - 22	R9G23512CS00	♦PRX	271 - 52	R3100416	PRX	297 - 14	R5000510XXWC	PRX	227 -201
Q69-X804	♦SIEG	440 - 84	R9G0062200	♦PRX	313 - 67	R9G23515AS00	♦PRX	271 - 53	R3100512	PRX	295 -111	R5000615WA	PRX	307 -217
Q69-X814	♦SIEG	440 - 85	R9G0081300	♦PRX	312 -199	R200	CODI	280 -215	R3100516	PRX	297 - 19	R5020108CJWA	♦PRX	264 -106
Q69-X815	♦SIEG	440 - 86	R9G0081800	♦PRX	313 - 23	R205	SLCB	285 -198	R3100612	PRX	295 -140	R5020108EJWA	♦PRX	264 -104
QC114H1	♦HITJ	370 -167	R9G0082200	♦PRX	313 - 69	R210	SLCB	286 - 8	R3100616	PRX	297 - 30	R5020108FJWA	♦PRX	264 -101
QC116H1	♦HITJ	370 -168	R9G0101300	♦PRX	405 - 31	R220	SLCB	286 - 45	R3100712	PRX	295 -149	R5020110CJWA	♦PRX	264 -107
QE114H1	♦HITJ	370 -185	R9G0101800	♦PRX	405 - 40	R250-A	♦MEHK	291 -105	R3100716	PRX	297 - 34	R5020110EJWA	♦PRX	264 -105

Δ-Registered with JEDEC by this manufacturer

♦-Mfr's data sheet available in microfilm service

1. TYPE No. CROSS INDEX

IN TYPE NUMBER SEQUENCE

TYPE No.	MFRS	Pg&Line
R5020110FJWA	♦PRX	264 -102
R5020113LSWA	♦PRX	264 -100
R5020118FSWA	♦PRX	264 -103
R5020208CJWA	♦PRX	264 -113
R5020208EJWA	♦PRX	264 -111
R5020208FJWA	♦PRX	264 -109
R5020210CJWA	♦PRX	264 -114
R5020210EJWA	♦PRX	264 -112
R5020210FJWA	♦PRX	264 -110
R5020213LSWA	♦PRX	264 -108
R5020308CJWA	♦PRX	264 -120
R5020308EJWA	♦PRX	264 -118
R5020308FJWA	♦PRX	264 -116
R5020310CJWA	♦PRX	264 -121
R5020310EJWA	♦PRX	264 -119
R5020310FJWA	♦PRX	264 -117
R5020313LSWA	♦PRX	264 -115
R5020408CJWA	♦PRX	264 -128
R5020408EJWA	♦PRX	264 -126
R5020408FJWA	♦PRX	264 -123
R5020410CJWA	♦PRX	264 -129
R5020410EJWA	♦PRX	264 -127
R5020410FJWA	♦PRX	264 -124
R5020413LSWA	♦PRX	264 -122
R5020418FSWA	♦PRX	264 -125
R5020508CJWA	♦PRX	264 -136
R5020508EJWA	♦PRX	264 -134
R5020508FJWA	♦PRX	264 -131
R5020510CJWA	♦PRX	264 -137
R5020510EJWA	♦PRX	264 -135
R5020510FJWA	♦PRX	264 -132
R5020513LSWA	♦PRX	264 -130
R5020518FSWA	♦PRX	264 -133
R5020608CJWA	♦PRX	264 -144
R5020608EJWA	♦PRX	264 -142
R5020608FJWA	♦PRX	264 -139
R5020610CJWA	♦PRX	264 -145
R5020610EJWA	♦PRX	264 -143
R5020610FJWA	♦PRX	264 -140
R5020610RSWA	♦PRX	306 - 86
R5020613LSWA	♦PRX	264 -138
R5020618FSWA	♦PRX	264 -141
R5020708CJWA	♦PRX	264 -152
R5020708EJWA	♦PRX	264 -150
R5020708FJWA	♦PRX	264 -147
R5020710CJWA	♦PRX	264 -153
R5020710EJWA	♦PRX	264 -151
R5020710FJWA	♦PRX	264 -148
R5020710RSWA	♦PRX	306 -127
R5020713LSWA	♦PRX	264 -146
R5020718FSWA	♦PRX	264 -149
R5020808CJWA	♦PRX	265 - 1
R5020808EJWA	♦PRX	264 -158
R5020808FJWA	♦PRX	264 -155
R5020810CJWA	♦PRX	265 - 2
R5020810EJWA	♦PRX	264 -159
R5020810FJWA	♦PRX	264 -156
R5020810RSWA	♦PRX	306 -132
R5020813LSWA	♦PRX	264 -154
R5020818FSWA	♦PRX	264 -157
R5020908CJWA	♦PRX	265 - 9
R5020908EJWA	♦PRX	265 - 7
R5020908FJWA	♦PRX	265 - 4
R5020910CJWA	♦PRX	265 - 10
R5020910EJWA	♦PRX	265 - 8
R5020910FJWA	♦PRX	265 - 5
R5020910RSWA	♦PRX	306 -178
R5020913LSWA	♦PRX	265 - 3
R5020918FSWA	♦PRX	265 - 6
R5021008CJWA	♦PRX	265 - 17
R5021008EJWA	♦PRX	265 - 15
R5021008FJWA	♦PRX	265 - 12
R5021010CJWA	♦PRX	265 - 18
R5021010EJWA	♦PRX	265 - 16
R5021010FJWA	♦PRX	265 - 13
R5021010RSWA	♦PRX	404 - 45
R5021013LSWA	♦PRX	265 - 11
R5021018FSWA	PRX	265 - 14
R5021108CJWA	♦PRX	265 - 24
R5021108EJWA	♦PRX	265 - 22
R5021108FJWA	♦PRX	265 - 19
R5021110CJWA	♦PRX	265 - 25
R5021110EJWA	♦PRX	265 - 23
R5021110FJWA	♦PRX	265 - 20
R5021110RSWA	♦PRX	405 -103
R5021113LSWA	♦PRX	238 - 4
R5021118FSWA	♦PRX	265 - 21
R5021208CJWA	♦PRX	265 - 32
R5021208EJWA	♦PRX	265 - 30
R5021208FJWA	♦PRX	265 - 27
R5021210CJWA	♦PRX	265 - 33
R5021210EJWA	♦PRX	265 - 31
R5021210FJWA	♦PRX	265 - 28
R5021210RSWA	♦PRX	407 -127
R5021213LSWA	♦PRX	265 - 26
R5021218FSWA	♦PRX	265 - 29
R5021313LSWA	♦PRX	265 - 34
R5021318FSWA	♦PRX	265 - 35
R5021413LSWA	♦PRX	265 - 36
R5021418FSWA	♦PRX	265 - 37
R5100215WA	PRX	307 - 89
R6000120YA	PRX	266 - 59
R6000125YA	PRX	266 - 63
R6000130YA	♦PRX	266 - 64
R6000220YA	PRX	266 - 79
R6000225YA	PRX	266 - 83
R6000230YA	♦PRX	266 - 84
R6000420YA	PRX	266 -112
R6000425YA	PRX	266 -116
R6000430YA	♦PRX	266 -117
R6000620YA	PRX	266 -146
R6000625YA	PRX	266 -150
R6000630YA	♦PRX	266 -151
R6000820YA	PRX	267 - 15
R6000825YA	PRX	267 - 19
R6000830YA	♦PRX	267 - 20
R6001020YA	PRX	267 - 54
R6001025YA	PRX	267 - 58
R6001030YA	♦PRX	267 - 59
R6001220YA	PRX	267 - 89
R6001225YA	PRX	267 - 90
R6001230YA	♦PRX	267 - 91
R6001420YA	PRX	267 -112
R6001425YA	PRX	267 -113
R6001430YA	♦PRX	267 -114
R6001620YA	PRX	267 -126
R6001625YA	PRX	267 -127
R6001630YA	♦PRX	267 -128
R6001820YA	PRX	267 -130
R6001825YA	PRX	267 -131
R6001830YA	♦PRX	267 -132
R6002020YA	PRX	267 -133
R6002025YA	PRX	267 -134
R6002030YA	♦PRX	267 -135
R6002220YA	PRX	267 -136
R6002225YA	PRX	267 -137
R6002230YA	PRX	267 -138
R6002420YA	PRX	267 -139
R6002425YA	PRX	267 -140
R6002430YA	♦PRX	267 -141
R6002620YA	PRX	267 -142
R6002625YA	PRX	267 -143
R6002630YA	♦PRX	267 -144
R6002820YA	PRX	267 -145
R6002825YA	PRX	267 -146
R6003020YA	PRX	267 -147
R6003025YA	PRX	267 -148
R6020120CJYA	PRX	266 - 55
R6020120EJYA	PRX	266 - 51
R6020120FJYA	PRX	266 - 47
R6020125CJYA	PRX	266 - 56
R6020125EJYA	PRX	266 - 52
R6020125FJYA	PRX	266 - 48
R6020220CJYA	PRX	266 - 75
R6020220EJYA	PRX	266 - 71
R6020220FJYA	PRX	266 - 67
R6020225CJYA	PRX	266 - 76
R6020225EJYA	PRX	266 - 72
R6020225FJYA	PRX	266 - 68
R6020325CJYA	PRX	266 - 89
R6020325EJYA	PRX	266 - 87
R6020325FJYA	PRX	266 - 85
R6020420CJYA	PRX	266 -107
R6020420EJYA	PRX	266 -102
R6020420FJYA	PRX	266 - 98
R6020422PSYA	PRX	309 - 30
R6020425CJYA	PRX	266 -108
R6020425EJYA	PRX	266 -103
R6020425FJYA	PRX	266 -109
R6020425HSYA	PRX	266 - 95
R6020435ESYA	PRX	266 -104
R6020525CJYA	PRX	266 -122
R6020525EJYA	PRX	266 -120
R6020525FJYA	PRX	266 -118
R6020620CJYA	PRX	266 -142
R6020620EJYA	PRX	266 -136
R6020620FJYA	PRX	266 -131
R6020622PSYA	PRX	309 - 31
R6020625CJYA	PRX	266 -143
R6020625EJYA	PRX	266 -137
R6020625FJYA	PRX	266 -132
R6020625HSYA	PRX	266 -128
R6020635ESYA	PRX	266 -138
R6020722PSYA	PRX	309 - 32
R6020725CJYA	PRX	266 -161
R6020725EJYA	PRX	266 -156
R6020725FJYA	PRX	266 -154
R6020725HSYA	PRX	266 -152
R6020735ESYA	PRX	266 -157
R6020820CJYA	PRX	267 - 11
R6020820EJYA	PRX	267 - 5
R6020820FJYA	PRX	266 -170
R6020822PSYA	PRX	309 - 33
R6020825CJYA	PRX	267 - 12
R6020825EJYA	PRX	267 - 6
R6020825FJYA	PRX	267 - 1
R6020825HSYA	PRX	266 -167
R6020835ESYA	PRX	267 - 7
R6020922PSYA	PRX	309 - 34
R6020925CJYA	PRX	267 - 29
R6020925EJYA	PRX	267 - 25
R6020925FJYA	PRX	267 - 23
R6020925HSYA	PRX	267 - 21
R6020935ESYA	PRX	267 - 26
R6021020CJYA	PRX	267 - 50
R6021020EJYA	PRX	267 - 43
R6021020FJYA	PRX	267 - 38
R6021022PSYA	PRX	404 -132
R6021025CJYA	PRX	267 - 51
R6021025EJYA	PRX	267 - 44
R6021025FJYA	PRX	267 - 39
R6021025HSYA	PRX	267 - 35
R6021035ESYA	PRX	267 - 45
R6021122PSYA	PRX	405 -124
R6021125CJYA	PRX	267 - 68
R6021125EJYA	PRX	267 - 64
R6021125FJYA	PRX	267 - 62
R6021125HSYA	PRX	267 - 60
R6021135ESYA	PRX	267 - 65
R6021220CJYA	PRX	267 - 85
R6021220EJYA	PRX	267 - 77
R6021220FJYA	PRX	267 - 72
R6021222PSYA	PRX	408 - 6
R6021225CJYA	PRX	267 - 86
R6021225EJYA	PRX	267 - 78
R6021225FJYA	PRX	267 - 73
R6021225HSYA	PRX	267 - 70
R6021235ESYA	PRX	267 - 79
R6021325HSYA	PRX	267 - 92
R6021335ESYA	PRX	267 - 94
R6021420CJYA	PRX	267 -108
R6021420EJYA	PRX	267 -100
R6021425CJYA	PRX	267 -109
R6021425EJYA	PRX	267 -101
R6021425HSYA	PRX	267 - 97
R6021435ESYA	PRX	267 -102
R6021620CJYA	PRX	267 -123
R6021620EJYA	PRX	267 -117
R6021625CJYA	PRX	267 -116
R6021625EJYA	PRX	267 -118
R6100120YA	PRX	266 - 60
R6100125YA	PRX	266 - 61
R6100130YA	PRX	266 - 62
R6100220YA	PRX	266 - 80
R6100225YA	PRX	266 - 81
R6100230YA	PRX	266 - 82
R6100320YA	PRX	266 - 91
R6100325YA	PRX	266 - 92
R6100330YA	PRX	266 - 93
R6100420YA	PRX	266 -113
R6100425YA	PRX	266 -114
R6100430YA	PRX	266 -115
R6100520YA	PRX	266 -124
R6100525YA	PRX	266 -125
R6100530YA	PRX	266 -126
R6100620YA	PRX	266 -147
R6100625YA	PRX	266 -148
R6100630YA	PRX	266 -149
R6100720YA	PRX	266 -163
R6100725YA	PRX	266 -164
R6100730YA	PRX	266 -165
R6100820YA	PRX	267 - 16
R6100825YA	PRX	267 - 17
R6100830YA	PRX	267 - 18
R6100920YA	PRX	267 - 31
R6100925YA	PRX	267 - 32
R6100930YA	PRX	267 - 33
R6101020YA	PRX	267 - 55
R6101025YA	PRX	267 - 56
R6101030YA	PRX	267 - 57
R6220135CJ	PRX	266 - 57
R6220135EJ	PRX	266 - 53
R6220135FJ	PRX	266 - 49
R6220140CJ	PRX	266 - 58
R6220140EJ	PRX	266 - 54
R6220140FJ	PRX	266 - 50
R6220235CJ	PRX	266 - 77
R6220235EJ	PRX	266 - 73
R6220235FJ	PRX	266 - 69
R6220240CJ	PRX	266 - 78
R6220240EJ	PRX	266 - 74
R6220240FJ	PRX	266 - 70
R6220340CJ	PRX	266 - 90
R6220340EJ	PRX	266 - 88
R6220340FJ	PRX	266 - 86
R6220430PS00	PRX	310 - 81
R6220435CJ	PRX	266 -110
R6220435EJ	PRX	266 -105
R6220435FJ	PRX	266 - 99
R6220440CJ	PRX	266 -111
R6220440EJ	PRX	266 -106
R6220440FJ	PRX	266 -100
R6220440HS00	PRX	266 - 96
R6220455ES00	PRX	266 -158
R6220540CJ	PRX	266 -123
R6220540EJ	PRX	266 -121
R6220540FJ	PRX	266 -119
R6220630PS00	PRX	310 - 96
R6220635CJ	PRX	266 -144
R6220635EJ	PRX	266 -139
R6220635FJ	PRX	266 -133
R6220640CJ	PRX	266 -145
R6220640EJ	PRX	266 -140
R6220640FJ	PRX	266 -134
R6220640HS00	PRX	266 -129
R6220655ES00	PRX	266 -141
R6220730PS00	PRX	310 -103
R6220740CJ	PRX	266 -162
R6220740EJ	PRX	266 -159
R6220740FJ	PRX	266 -155
R6220740HS00	PRX	266 -153
R6220755ES00	PRX	266 -160
R6220830PS00	PRX	310 -116
R6220835CJ	PRX	267 - 13
R6220835EJ	PRX	267 - 8
R6220835FJ	PRX	267 - 2
R6220840CJ	PRX	267 - 14
R6220840EJ	PRX	267 - 9
R6220840FJ	PRX	267 - 3
R6220840HS00	PRX	266 -168
R6220855ES00	PRX	267 - 10
R6220930PS00	PRX	310 -122
R6220940CJ	PRX	267 - 30
R6220940EJ	PRX	267 - 27
R6220940FJ	PRX	267 - 24
R6220940HS00	PRX	267 - 22
R6220955ES00	PRX	267 - 28
R6221030PS00	PRX	404 -169
R6221035CJ	PRX	267 - 52
R6221035EJ	PRX	267 - 46
R6221035FJ	PRX	267 - 40
R6221040CJ	PRX	267 - 53
R6221040EJ	PRX	267 - 47
R6221040FJ	PRX	267 - 41
R6221040HS00	PRX	267 - 36
R6221055ES00	PRX	238 - 5
R6221130PS00	PRX	405 -135
R6221140CJ	PRX	267 - 69
R6221140EJ	PRX	267 - 66
R6221140FJ	PRX	267 - 63
R6221140HS00	PRX	267 - 61
R6221155ES00	PRX	267 - 67
R6221230PS00	PRX	408 - 45
R6221235CJ	PRX	267 - 87
R6221235EJ	PRX	267 - 80
R6221235FJ	PRX	267 - 74
R6221240CJ	PRX	267 - 88
R6221240EJ	PRX	267 - 81
R6221240FJ	PRX	267 - 75
R6221240HS00	PRX	267 - 71
R6221255ES00	PRX	267 - 82
R6221340HS00	PRX	267 - 93
R6221355ES00	PRX	267 - 95
R6221435CJ	PRX	267 -110
R6221435EJ	PRX	267 -103
R6221440CJ	PRX	267 -111
R6221440EJ	PRX	267 -104
R6221440HS00	PRX	267 - 98
R6221455ES00	PRX	267 -105
R6221635CJ	PRX	267 -124
R6221635EJ	PRX	267 -119
R6221640CJ	PRX	267 -125
R6221640EJ	PRX	267 -120
R7000103UA	PRX	268 -197
R7000104UA	PRX	268 -196
R7000105UA	PRX	268 -195
R7000203UA	PRX	269 - 19
R7000204UA	PRX	269 - 18
R7000205UA	PRX	269 - 17
R7000303	PRX	310 - 67
R7000304	PRX	311 - 76
R7000305	PRX	311 -143
R7000403UA	PRX	269 - 51
R7000404UA	PRX	269 - 50
R7000405UA	PRX	269 - 49
R7000503	PRX	310 - 84
R7000504	PRX	311 - 81
R7000505	PRX	311 -144
R7000603UA	PRX	269 - 85
R7000604UA	PRX	269 - 84
R7000605UA	PRX	269 - 83
R7000703	PRX	310 - 97
R7000704	PRX	311 - 83
R7000705	PRX	311 -145
R7000803UA	PRX	269 -122
R7000804UA	PRX	269 -121
R7000805UA	PRX	269 -120
R7000903	PRX	310 -117
R7000904	PRX	311 - 88
R7000905	PRX	311 -146
R7001003UA	PRX	270 - 19
R7001004UA	PRX	270 - 18
R7001005UA	PRX	270 - 17
R7001203UA	PRX	270 - 55
R7001204UA	PRX	270 - 54
R7001205UA	♦PRX	270 - 53
R7001403UA	PRX	270 - 84
R7001404UA	PRX	270 - 83
R7001603UA	PRX	270 -105
R7001604UA	PRX	270 -104
R7001803UA	PRX	270 -120
R7001804UA	PRX	270 -119
R7002003UA	PRX	271 - 7
R7002004UA	PRX	271 - 6
R7002203UA	PRX	271 - 21
R7002403UA	PRX	271 - 27
R7002603UA	PRX	271 - 37
R7002803UA	PRX	271 - 42
R7003003UA	PRX	271 - 47
R7003203	PRX	420 - 75
R7003403	PRX	420 -145
R7003503UA	PRX	271 - 54
R7003603	PRX	421 - 30
R7003803	PRX	421 - 88
R7004003UA	PRX	271 - 55
R7220105AJ	PRX	268 -190
R7220105CJ	PRX	268 -184
R7220105EJ	PRX	268 -178
R7220106AJ	PRX	268 -191
R7220106CJ	PRX	268 -185
R7220106EJ	PRX	268 -179
R7220108AJ	PRX	268 -192
R7220108CJ	PRX	268 -186
R7220108EJ	PRX	268 -180
R7220205AJ	PRX	269 - 11
R7220205CJ	PRX	269 - 5
R7220205EJ	PRX	268 -198
R7220206AJ	PRX	269 - 12
R7220206CJ	PRX	269 - 6
R7220206EJ	PRX	268 -199
R7220208AJ	PRX	269 - 13
R7220208CJ	PRX	269 - 7
R7220208EJ	PRX	269 - 1
R7220305AJ	PRX	265 -128
R7220305CJ	PRX	265 -126
R7220305EJ	PRX	265 -125
R7220306AJ	PRX	266 - 22
R7220306CJ	PRX	266 - 21
R7220306EJ	PRX	266 - 20
R7220308AJ	PRX	267 -158
R7220308CJ	PRX	267 -155
R7220308EJ	PRX	267 -154
R7220405AJ	PRX	269 - 43
R7220405CJ	PRX	269 - 35
R7220405EJ	PRX	269 - 25
R7220405ES00	PRX	269 - 26
R7220406AJ	PRX	269 - 44
R7220406CJ	PRX	269 - 36
R7220406EJ	PRX	269 - 27
R7220406HS00	PRX	269 - 22
R7220407CS00	PRX	269 - 37
R7220408AJ	PRX	269 - 45
R7220408CJ	PRX	269 - 38
R7220408EJ	PRX	269 - 28
R7220408ES00	PRX	269 - 29
R7220505AJ	PRX	265 -133
R7220505CJ	PRX	265 -131
R7220505EJ	PRX	265 -130
R7220506AJ	PRX	266 - 25
R7220506CJ	PRX	266 - 24
R7220506EJ	PRX	266 - 23
R7220508AJ	PRX	268 - 2
R7220508CJ	PRX	267 -163
R7220508EJ	PRX	267 -162
R7220605AJ	PRX	269 - 77
R7220605CJ	PRX	269 - 69
R7220605EJ	PRX	269 - 59
R7220605ES00	PRX	269 - 60
R7220606AJ	PRX	269 - 78
R7220606CJ	PRX	269 - 70
R7220606EJ	PRX	269 - 61
R7220606HS00	PRX	269 - 56
R7220607CS00	PRX	269 - 71
R7220608AJ	PRX	269 - 79
R7220608CJ	PRX	269 - 72
R7220608EJ	PRX	269 - 62
R7220608ES00	PRX	269 - 63
R7220705AJ	PRX	265 -140
R7220705CJ	PRX	265 -136
R7220705EJ	PRX	265 -135
R7220706AJ	PRX	266 - 28
R7220706CJ	PRX	266 - 27
R7220706EJ	PRX	266 - 26
R7220706HS00	PRX	269 - 88
R7220708AJ	PRX	268 - 10
R7220708CJ	PRX	268 - 7
R7220708EJ	PRX	268 - 6
R7220708ES00	PRX	269 - 90
R7220805AJ	PRX	269 -113
R7220805CJ	PRX	269 -105
R7220805EJ	PRX	269 - 95
R7220805ES00	PRX	269 - 96
R7220806AJ	PRX	269 -114
R7220806CJ	PRX	269 -106
R7220806EJ	PRX	269 - 97
R7220806HS00	PRX	269 - 92
R7220807CS00	PRX	269 -107
R7220808AJ	PRX	269 -115
R7220808CJ	PRX	269 -108
R7220808EJ	PRX	269 - 98
R7220808ES00	PRX	269 - 99
R7220905AJ	PRX	265 -145
R7220905CJ	PRX	265 -143
R7220905EJ	PRX	265 -142
R7220906AJ	PRX	266 - 31
R7220906CJ	PRX	266 - 30
R7220906EJ	PRX	266 - 29
R7220906HS00	PRX	269 -125
R7220908AJ	PRX	268 - 18
R7220908CJ	PRX	268 - 15
R7220908EJ	PRX	268 - 14
R7220908ES00	PRX	269 -127
R7221005AJ	PRX	265 -149
R7221005CJ	PRX	265 -147
R7221005EJ	PRX	265 -146
R7221005ES00	PRX	269 -131
R7221006AJ	PRX	270 - 12
R7221006CJ	PRX	270 - 5
R7221006EJ	PRX	269 -132
R7221006HS00	PRX	269 -129
R7221007CS00	PRX	270 - 6
R7221008AJ	PRX	270 - 13
R7221008CJ	PRX	270 - 7
R7221008EJ	PRX	269 -133
R7221008ES00	PRX	269 -134
R7221105AJ	PRX	265 -153
R7221105CJ	PRX	265 -151
R7221105EJ	PRX	265 -150
R7221106AJ	PRX	266 - 34
R7221106CJ	PRX	266 - 33
R7221106EJ	PRX	266 - 32
R7221106HS00	PRX	270 - 22
R7221108AJ	PRX	268 - 26
R7221108CJ	PRX	268 - 23
R7221108EJ	PRX	268 - 22
R7221108ES00	PRX	270 - 24
R7221205AJ	PRX	270 - 47
R7221205CJ	PRX	270 - 39
R7221205EJ	PRX	270 - 29
R7221205ES00	PRX	270 - 30
R7221206AJ	PRX	270 - 48
R7221206CJ	PRX	270 - 40
R7221206EJ	PRX	270 - 31
R7221206HS00	PRX	270 - 26
R7221207CS00	PRX	270 - 41
R7221208AJ	PRX	270 - 49
R7221208CJ	PRX	270 - 42
R7221208EJ	PRX	270 - 32
R7221208ES00	PRX	270 - 33
R7221305AJ	PRX	265 -159
R7221305CJ	PRX	265 -157
R7221306AJ	PRX	266 - 36
R7221306CJ	PRX	266 - 35
R7221306HS00	PRX	270 - 58
R7221308AJ	PRX	268 - 33
R7221308CJ	PRX	268 - 30
R7221308ES00	PRX	270 - 60
R7221405AJ	PRX	270 - 78
R7221405CJ	PRX	270 - 71
R7221405ES00	PRX	270 - 66
R7221406AJ	PRX	270 - 79
R7221406CJ	PRX	270 - 72
R7221406HS00	PRX	270 - 63
R7221407CS00	PRX	270 - 73
R7221408AJ	PRX	270 - 80
R7221408CJ	PRX	270 - 74
R7221408ES00	PRX	270 - 67
R7221505AJ	PRX	265 -165
R7221505CJ	PRX	265 -161
R7221506AJ	PRX	266 - 38

Δ-Registered with JEDEC by this manufacturer

♦-Mfr's data sheet available in microfilm service

1. TYPE No. CROSS INDEX

IN TYPE NUMBER SEQUENCE

TYPE No.	MFRS	Pg&Line
R7221506CJ	PRX	266 - 37
R7221508AJ	PRX	268 - 41
R7221508CJ	PRX	268 - 38
R7221605AJ	PRX	270 - 99
R7221605CJ	PRX	270 - 92
R7221605ES00	PRX	270 - 88
R7221606AJ	PRX	270 -100
R7221606CJ	PRX	270 - 93
R7221607CS00	PRX	270 - 94
R7221608AJ	PRX	270 -101
R7221608CJ	PRX	270 - 95
R7221705AJ	PRX	265 -168
R7221805AJ	PRX	270 -116
R7221805ES00	PRX	270 -109
R7221807CS00	PRX	270 -112
R7221905AJ	PRX	265 -171
R7222005AJ	PRX	271 - 3
R7222005ES00	PRX	270 -124
R7222007CS00	PRX	270 -127
R7222105AJ	PRX	271 - 10
R7222205AJ	PRX	271 - 18
R7222205ES00	PRX	271 - 12
R7222207CS00	PRX	271 - 15
R7222305AJ	PRX	265 -176
R7222405AJ	PRX	271 - 26
R7222505AJ	PRX	271 - 33
R7222505ES00	PRX	271 - 30
R7222507CS00	PRX	271 - 32
R41000525	PRX	299 - 96
R41000625	PRX	299 -138
R41000725	PRX	299 -147
R41000825	PRX	299 -173
R41000925	PRX	299 -182
R620013000	PRX	310 - 52
R620014000	PRX	310 -194
R620015000	PRX	311 -101
R620023000	PRX	310 - 62
R620024000	PRX	310 -207
R620025000	PRX	311 -105
R620043000	PRX	310 - 80
R620044000	PRX	311 - 8
R620045000	PRX	311 -111
R620063000	PRX	310 - 95
R620064000	PRX	311 - 29
R620065000	PRX	311 -121
R620083000	PRX	310 -115
R620084000	PRX	311 - 50
R620085000	PRX	311 -133
R620103000	PRX	404 -168
R620104000	PRX	404 -188
R620105000	PRX	404 -198
R620123000	PRX	408 - 44
R620124000	PRX	408 - 68
R620125000	PRX	408 - 85
R620143000	PRX	410 - 81
R620144000	PRX	410 - 96
R620163000	PRX	413 - 41
R620164000	PRX	413 - 55
R620183000	PRX	414 - 49
R620184000	PRX	414 - 60
R620203000	PRX	415 -150
R620204000	PRX	415 -159
R620223000	PRX	416 - 90
R620243000	PRX	417 - 25
R620263000	PRX	418 - 67
R620283000	PRX	418 -179
R620303000	PRX	419 -195
R720010600	PRX	311 -168
R720010900	PRX	312 - 52
R720011200	PRX	312 -152
R720020600	PRX	311 -170
R720020900	PRX	312 - 54
R720021200	PRX	312 -157
R720030600	PRX	311 -173
R720030900	PRX	312 - 56
R720031200	PRX	312 -162
R720040600	PRX	311 -175
R720040900	PRX	312 - 58
R720041200	PRX	312 -167
R720050600	PRX	311 -178
R720050900	PRX	312 - 60
R720051200	PRX	312 -172
R720060600	PRX	311 -180
R720060900	PRX	312 - 62
R720061200	PRX	312 -177
R720070900	PRX	312 - 64
R720071200	PRX	312 -182
R720080600	PRX	311 -184
R720080900	PRX	312 - 66
R720081200	PRX	312 -186
R720091200	PRX	312 -191
R720100600	PRX	404 -213
R720100900	PRX	405 - 13
R720101200	PRX	405 - 27
R720120600	PRX	408 - 97
R720120900	PRX	408 -126
R720121200	PRX	408 -141
R720140600	PRX	410 -131
R720140900	PRX	410 -156
R720160600	PRX	413 - 75
R720160900	PRX	413 -102
R720180600	PRX	414 - 81
R720180900	PRX	414 - 98
R720200600	PRX	415 -179
R720200900	PRX	415 -199
R720220600	PRX	416 -111
R720240600	PRX	417 - 44
R720260600	PRX	418 - 81
R720280600	PRX	418 -187
R720300600	PRX	419 -206
RA251	♦DII	298 -163
	♦RECT	
RA252	♦DII	299 - 3
	♦RECT	

TYPE No.	MFRS	Pg&Line
RA253	♦DII	299 - 26
	♦RECT	
RA254	♦DII	299 - 76
	♦RECT	
RA255	♦DII	299 - 97
	♦RECT	
RA256	♦DII	299 -139
	♦RECT	
RA258	♦DII	299 -174
	♦RECT	
RA2505	♦DII	298 -129
	♦RECT	
RA2510	♦DII	403 -146
	♦RECT	
RA200136XX00	PRX	313 -134
RA200148XX00	PRX	313 -164
RA200236XX00	PRX	313 -135
RA200248XX00	PRX	269 - 20
RA200436XX00	PRX	313 -136
RA200448XX00	PRX	269 - 52
RA200636XX00	PRX	313 -137
RA200648XX00	PRX	269 - 86
RA200836XX00	PRX	313 -138
RA200848XX00	PRX	269 -123
RA201036XX00	PRX	405 - 56
RA201048XX00	PRX	270 - 20
RA201236XX00	PRX	408 -172
RA201248XX00	PRX	270 - 56
RA201425XX00	PRX	270 - 85
RA201436XX00	PRX	270 - 86
RA201625XX00	PRX	270 -106
RA201636XX00	PRX	270 -107
RA201825XX00	PRX	270 -121
RA201836XX00	PRX	270 -122
RA202025XX00	PRX	271 - 8
RA202036XX00	PRX	271 - 9
RA202220XX00	PRX	416 -142
RA202225XX00	PRX	271 - 22
RA202420XX00	PRX	417 - 85
RA202425XX00	PRX	271 - 28
RA202620XX00	PRX	418 -112
RA202625XX00	PRX	271 - 38
RA202820XX00	PRX	418 -220
RA202825XX00	PRX	271 - 43
RA203020XX00	PRX	420 - 20
RA203025XX00	PRX	271 - 48
RA203220XX00	PRX	420 -109
RA203225XX00	PRX	420 -111
RA203420XX00	PRX	420 -166
RA203425XX00	PRX	420 -167
RA203620XX00	PRX	421 - 57
RA203820XX00	PRX	421 -110
RA204020XX00	PRX	422 - 84
RA204220XX00	PRX	422 -132
RA204420XX00	PRX	422 -184
RA-1	♦SAKJ	281 - 75
RA-1A	♦SAKJ	281 -191
RA-1B	♦SAKJ	279 -124
RA-1C	♦SAKJ	401 -136
RA-1D	♦SAKJ	406 - 10
RA-1E	♦SAKJ	409 - 62
RA-1F	♦SAKJ	411 - 45
RA-1Z	♦SAKJ	280 -169
RA-2	SAKJ	282 -216
RA-2C	SAKJ	402 - 25
RAB005	EDI	252 - 95
RAB010	EDI	253 - 61
RAB020	EDI	254 - 54
RAB040	EDI	254 -182
RAB060	EDI	255 - 86
RAB080	EDI	255 -185
RAB100	EDI	256 - 36
RAR2400	GIC	257 -174
RAR2401	GIC	258 - 97
RAR2402	GIC	259 - 95
RAR2404	GIC	260 - 62
RAR2406	GIC	260 -195
RB150Z	SAKJ	283 - 69
RB151	♦DII	361 -152
	♦RECT	
RB151F	♦RECT	361 -142
RB151G	♦DII	361 -143
	♦RECT	
RB151Z	SAKJ	283 -115
RB152	♦DII	361 -176
	♦RECT	
RB152F	♦RECT	361 -168
RB152G	♦DII	361 -169
	♦RECT	
RB152Z	SAKJ	283 -180
RB153	♦DII	361 -192
	♦RECT	
RB153F	♦RECT	361 -201
RB153G	♦DII	362 - 1
	♦RECT	
RB154	♦DII	362 - 27
	♦RECT	
RB154F	♦RECT	362 - 37
RB154G	♦DII	362 - 38
	♦RECT	
RB154Z	SAKJ	284 - 67
RB155	♦DII	362 - 63
	♦RECT	
RB155F	♦RECT	362 - 71
RB155G	♦DII	362 - 72
	♦RECT	
RB156	♦DII	362 - 89
	♦RECT	
RB156F	♦RECT	362 - 98
RB156G	♦DII	362 - 99
	♦RECT	
RB156Z	SAKJ	284 -169
RB157	♦DII	402 - 56
	♦RECT	

TYPE No.	MFRS	Pg&Line
RB157F	♦RECT	402 - 65
RB157G	♦DII	362 -116
	♦RECT	
RB158	SAKJ	285 - 47
RB158Z	SAKJ	285 - 33
RB-150	SAKJ	283 - 82
RB-151	SAKJ	283 -131
RB-152	SAKJ	283 -195
RB-154	SAKJ	284 - 83
RB-156	SAKJ	284 -186
RBA151	RECT	362 -180
RBA152	RECT	363 - 9
RBA153	RECT	363 - 50
RBA154	RECT	363 - 99
RBA155	RECT	363 -143
RBA156	RECT	363 -181
RBA157	RECT	363 -209
RBB151	RECT	364 - 9
RBB152	RECT	363 - 10
RBB153	RECT	363 - 51
RBB154	RECT	286 -119
RBB155	RECT	286 -167
RBB156	RECT	363 -182
RBB157	RECT	363 -210
RBC151	RECT	362 -181
RBC152	RECT	363 - 11
RBC153	RECT	363 - 52
RBC154	RECT	363 -100
RBC155	RECT	363 -144
RBC156	RECT	363 -183
RBC157	RECT	363 -211
RBD151	RECT	362 -182
RBD152	RECT	363 - 12
RBD153	RECT	363 - 53
RBD154	RECT	363 -101
RBD155	RECT	363 -145
RBD156	RECT	363 -184
RBD157	RECT	363 -212
RC2	SAKJ	414 -214
RC201	♦DII	362 -183
	♦RECT	
RC202	♦DII	363 - 13
	♦RECT	
RC203	♦DII	363 - 54
	♦RECT	
RC204	♦DII	363 -102
	♦RECT	
RC205	♦DII	363 -146
	♦RECT	
RC206	♦DII	363 -185
	♦RECT	
RC207	♦DII	363 -213
	♦RECT	
RD2.0EB	NECE	163 -138
	NECJ	
RD2.0EC	NECE	163 -166
	NECJ	
RD2.0EK	NECE	163 -134
RD2.0FB	NECE	163 -144
	NECJ	
RD2.0FC	NECE	163 -167
	NECJ	
RD2.2EB	NECE	163 -184
	NECJ	
RD2.2EC	NECE	164 - 12
	NECJ	
RD2.2EK	NECE	163 -180
RD2.2FB	NECE	163 -191
	NECJ	
RD2.2FC	NECE	164 - 13
	NECJ	
RD2.4EB	NECE	164 - 54
	NECJ	
RD2.4EC	NECE	164 -107
	NECJ	
RD2.4EK	NECE	164 - 41
RD2.4FB	NECE	164 - 71
	NECJ	
RD2.4FC	NECE	164 -108
	NECJ	
RD2.4MB	NECE	164 - 16
	NECJ	
RD2.7EB	NECE	164 -170
RD2.7EB1	NECJ	164 -119
RD2.7EB2	NECJ	165 - 17
RD2.7EC	NECE	165 - 44
RD2.7EL	NECJ	165 - 4
RD2.7EL1	NECJ	164 -120
RD2.7EL2	NECJ	165 - 18
RD2.7EN	NECJ	165 - 5
RD2.7EN1	NECJ	164 -121
RD2.7EN2	NECJ	165 - 19
RD2.7FB	NECE	164 -196
RD2.7FB1	♦NECJ	164 -126
RD2.7FB2	♦NECJ	165 - 37
RD2.7FC	NECE	165 - 46
RD2.7MB	NECE	164 -130
	NECJ	
RD2.7MB1	NECJ	164 -112
RD2.7MB2	NECJ	165 - 7
RD3.0EB	NECE	165 -109
RD3.0EB1	NECJ	165 - 48
RD3.0EB2	NECJ	165 -161
RD3.0EC	NECE	165 -169
RD3.0EL	NECJ	165 -146
RD3.0EL1	NECJ	165 - 49
RD3.0EL2	NECJ	165 -162
RD3.0EN	NECJ	165 -147
RD3.0EN2	NECJ	165 -163
RD3.0FB	NECE	165 -137
RD3.0FB1	♦NECJ	165 - 47
RD3.0FB2	♦NECJ	165 -148
RD3.0FC	NECE	165 -171

TYPE No.	MFRS	Pg&Line
RD3.0MB	NECE	165 - 55
	NECJ	
RD3.0MB1	NECJ	165 - 41
RD3.0MB2	NECJ	165 -149
RD3.3EB	NECE	166 - 41
RD3.3EB1	NECJ	165 -173
RD3.3EB2	NECJ	166 -120
RD3.3EC	NECE	166 -134
RD3.3EL	NECJ	166 -114
RD3.3EL1	NECJ	165 -174
RD3.3EL2	NECJ	166 -121
RD3.3EN	NECJ	166 -115
RD3.3EN1	NECJ	165 -175
RD3.3EN2	NECJ	166 -122
RD3.3FB	NECE	166 - 82
RD3.3FB1	♦NECJ	165 -172
RD3.3FB2	♦NECJ	166 -116
RD3.3FC	NECE	166 -143
RD3.3MB	NECE	165 -182
	NECJ	
RD3.3MB1	NECJ	165 -165
RD3.3MB2	NECJ	166 -117
RD3.6EB	NECE	167 - 7
RD3.6EB1	NECJ	166 -145
RD3.6EB2	NECJ	167 - 92
RD3.6EC	NECE	167 - 99
RD3.6EL	NECJ	167 - 85
RD3.6EL1	NECJ	166 -146
RD3.6EL2	NECJ	167 - 93
RD3.6EN	NECJ	167 - 86
RD3.6EN1	NECJ	166 -147
RD3.6EN2	NECJ	167 - 94
RD3.6FB	NECE	167 - 45
RD3.6FB1	♦NECJ	166 -144
RD3.6FB2	♦NECJ	167 - 91
RD3.6FC	NECE	167 -101
RD3.6MB	NECE	166 -156
	NECJ	
RD3.6MB1	NECJ	166 -127
RD3.6MB2	NECJ	167 - 87
RD3.9EB	NECE	167 -184
RD3.9EB1	NECJ	167 -102
RD3.9EB2	NECJ	168 - 88
RD3.9EC	NECE	168 -106
RD3.9EL	NECJ	168 - 82
RD3.9EL1	NECJ	167 -103
RD3.9EL2	NECJ	168 - 89
RD3.9EN	NECJ	168 - 83
RD3.9EN1	NECJ	167 -104
RD3.9EN2	NECJ	168 - 90
RD3.9FB	NECE	168 - 24
RD3.9FB1	♦NECJ	167 -105
RD3.9FB2	♦NECJ	168 - 91
RD3.9FC	NECE	168 -108
RD3.9MB	NECE	167 -119
	NECJ	
RD3.9MB1	NECJ	167 - 96
RD3.9MB2	NECJ	168 - 84
RD4.3EB	NECE	168 -208
RD4.3EB1	NECJ	168 -109
RD4.3EB2	NECJ	168 -188
RD4.3EB3	NECJ	169 -102
RD4.3EC	NECE	169 -121
RD4.3EL	NECJ	168 -189
RD4.3EL1	NECJ	168 -110
RD4.3EL2	NECJ	168 -190
RD4.3EL3	NECJ	169 -103
RD4.3EN	NECJ	168 -191
RD4.3EN1	NECJ	168 -111
RD4.3EN2	NECJ	168 -192
RD4.3EN3	NECJ	169 -104
RD4.3FB	NECE	168 -117
RD4.3FB1	♦NECJ	168 -107
RD4.3FB2	♦NECJ	168 -118
RD4.3FB3	NECJ	169 -101
RD4.3FC	NECE	169 -122
RD4.3MB	NECE	168 -128
	NECJ	
RD4.3MB1	NECJ	168 - 96
RD4.3MB2	NECJ	168 -129
RD4.3MB3	NECJ	169 - 97
RD4.7EB	NECE	170 - 42
RD4.7EB1	NECJ	169 -124
RD4.7EB2	NECJ	169 -134
RD4.7EB3	NECJ	170 -166
RD4.7EC	NECE	170 -189
RD4.7EL	NECJ	169 -137
RD4.7EL1	NECJ	169 -125
RD4.7EL2	NECJ	169 -135
RD4.7EL3	NECJ	170 -167
RD4.7EN	NECJ	169 -138
RD4.7EN1	NECJ	169 -126
RD4.7EN2	NECJ	169 -136
RD4.7EN3	NECJ	170 -168
RD4.7FB	NECE	169 -133
RD4.7FB1	♦NECJ	169 -119
RD4.7FB2	♦NECJ	169 -132
RD4.7FB3	♦NECJ	170 -157
RD4.7FC	NECE	170 -198
RD4.7JB	NECE	170 - 9
RD4.7JSB(A)	♦NECJ	170 -158
RD4.7JSB1(A)	♦NECJ	169 -118
RD4.7JSB2(A)	♦NECJ	169 -130
RD4.7JSB3(A)	♦NECJ	170 -156
RD4.7MB	NECE	169 -160
	NECJ	
RD4.7MB1	♦NECJ	169 -106
RD4.7MB2	NECJ	169 -127
RD4.7MB3	NECJ	170 -159
RD4.7P(A)	♦NECJ	170 -100
RD5AK	NECJ	170 -161
RD5AL	NECJ	169 -108
RD5AM	NECJ	170 -162
RD5AN	NECJ	171 - 38

TYPE No.	MFRS	Pg&Line
RD5BK	NECJ	170 -171
RD5BL	NECJ	169 -115
RD5BM	NECJ	170 -172
RD5BN	NECJ	171 -164
RD5C	NECJ	170 -182
RD5CK	NECJ	170 -173
RD5CL	NECJ	169 -117
RD5CM	NECJ	170 -174
RD5CN	NECJ	172 - 13
RD5DK	NECJ	378 - 51
RD5DLM	NECJ	378 - 18
RD5DMN	NECJ	378 - 54
RD5.1EB	NECE	171 -123
RD5.1EB1	NECJ	170 -193
RD5.1EB2	NECJ	171 - 16
RD5.1EB3	NECJ	172 - 31
RD5.1EC	NECE	172 - 60
RD5.1EL	NECJ	171 - 21
RD5.1EL1	NECJ	170 -194
RD5.1EL2	NECJ	171 - 17
RD5.1EL3	NECJ	172 - 32
RD5.1EN	NECJ	171 - 22
RD5.1EN1	NECJ	170 -195
RD5.1EN2	NECJ	171 - 18
RD5.1EN3	NECJ	172 - 33
RD5.1FB	NECE	171 -182
RD5.1FB1	♦NECJ	170 -192
RD5.1FB2	♦NECJ	171 - 20
RD5.1FB3	♦NECJ	172 - 35
RD5.1FC	NECE	172 - 64
RD5.1JB	NECE	171 - 91
RD5.1JSB(A)	♦NECJ	171 - 92
RD5.1JSB1(A)	♦NECJ	170 -191
RD5.1JSB2(A)	♦NECJ	171 - 68
RD5.1JSB3(A)	♦NECJ	172 - 36
RD5.1MB	NECE	171 - 34
	NECJ	
RD5.1MB1	NECJ	170 -183
RD5.1MB2	NECJ	171 - 35
RD5.1MB3	NECJ	172 - 37
RD5.1P	♦NECJ	171 -183
RD5.6EB	NECE	172 -212
RD5.6EB1	NECJ	172 - 66
RD5.6EB2	NECJ	172 - 76
RD5.6EB3	NECJ	173 -143
RD5.6EC	NECE	174 - 2
RD5.6EL	NECJ	172 - 86
RD5.6EL1	NECJ	172 - 67
RD5.6EL2	NECJ	172 - 77
RD5.6EL3	NECJ	173 -144
RD5.6EN	NECJ	172 - 87
RD5.6EN1	NECJ	172 - 68
RD5.6EN2	NECJ	172 - 78
RD5.6EN3	NECJ	173 -145
RD5.6FB	NECE	173 -136
RD5.6FB1	♦NECJ	172 - 70
RD5.6FB2	NECJ	173 - 47
RD5.6FB3	♦NECJ	173 -160
RD5.6FC	NECE	173 -193
RD5.6JB	NECE	172 -179
RD5.6JSB(A)	♦NECJ	172 -180
RD5.6JSB1(A)	♦NECJ	172 - 72
RD5.6JSB2(A)	♦NECJ	173 -129
RD5.6JSB3(A)	♦NECJ	173 -164
RD5.6MB	NECE	172 -105
	NECJ	
RD5.6MB1	NECJ	172 - 79
RD5.6MB2	NECJ	172 -107
RD5.6MB3	NECJ	173 -148
RD5.6P	♦NECJ	173 - 67
RD6AK	NECJ	173 -152
RD6AL	NECJ	172 - 58
RD6AM	NECJ	173 -137
RD6AN	NECJ	174 - 26
RD6BK	NECJ	173 -161
RD6BL	NECJ	172 - 62
RD6BM	NECJ	173 -138
RD6BN	NECJ	174 - 27
RD6CK	NECJ	173 -163
RD6CL	NECJ	172 - 65
RD6CM	NECJ	173 -139
RD6CN	NECJ	174 - 29
RD6DK	NECJ	378 -141
RD6DLM	NECJ	378 -106
RD6DMN	NECJ	378 -144
RD6.2EB	NECE	175 - 65
RD6.2EB1	NECJ	173 -185
RD6.2EB2	NECJ	174 - 30
RD6.2EB3	NECJ	176 - 15
RD6.2EC	NECE	174 - 3
RD6.2EL	NECJ	174 - 31
RD6.2EL1	NECJ	173 -186
RD6.2EL2	NECJ	174 - 32
RD6.2EN	NECJ	174 - 33
RD6.2EN1	NECJ	173 -187
RD6.2EN2	NECJ	174 - 34
RD6.2EN3	NECJ	176 - 16
RD6.2FB	NECE	175 -137
RD6.2FB1	NECJ	173 -192
RD6.2FB2	♦NECJ	174 - 40
RD6.2FB3	♦NECJ	176 - 21
RD6.2FC	NECE	177 - 98
RD6.2JB	NECE	174 -208
RD6.2JSB(A)	♦NECJ	174 -209
RD6.2JSB1(A)	♦NECJ	173 -202
RD6.2JSB2(A)	♦NECJ	174 - 42
RD6.2JSB3(A)	♦NECJ	176 -108
RD6.2MB	NECE	174 - 92
	NECJ	
RD6.2MB1	NECJ	173 -198
RD6.2MB2	NECJ	174 - 93
RD6.2MB3	NECJ	176 -102
RD6.2P	♦NECJ	175 -130
RD6.8EB	NECE	178 - 34

Δ-Registered with JEDEC by this manufacturer

♦-Mfr's data sheet available in microfilm service

1. TYPE No. CROSS INDEX

IN TYPE NUMBER SEQUENCE

TYPE No.	MFRS	Pg&Line
RD6.8EB1	NECJ	176 -195
RD6.8EB2	NECJ	177 -103
RD6.8EB3	NECJ	178 -205
RD6.8EC	NECE	179 - 81
RD6.8EL	NECJ	177 -101
RD6.8EL1	NECJ	176 -196
RD6.8EL2	NECJ	177 -104
RD6.8EL3	NECJ	178 -206
RD6.8EN	NECJ	177 -102
RD6.8EN1	NECJ	176 -197
RD6.8EN2	NECJ	177 -105
RD6.8EN3	NECJ	178 -207
RD6.8FB	NECE	178 -114
RD6.8FB1	♦NECJ	177 - 75
RD6.8FB2	♦NECJ	177 -118
RD6.8FB3	♦NECJ	179 - 14
RD6.8FC	NECE	179 - 88
RD6.8JB	NECE	177 -217
RD6.8JSB(A)	♦NECJ	178 - 1
RD6.8JSB1(A)	♦NECJ	177 -100
RD6.8JSB2(A)	♦NECJ	177 -124
RD6.8JSB3(A)	♦NECJ	179 - 19
RD6.8MB	NECE	179 - 7
	NECJ	
RD6.8MB1	NECJ	177 - 84
RD6.8MB2	NECJ	177 -145
RD6.8MB3	NECJ	179 - 16
RD6.8P	♦NECJ	178 -115
RD7A	♦APD	179 - 39
RD7AK	NECJ	179 - 40
RD7AL	NECJ	176 -206
RD7AM	NECJ	179 - 8
RD7AN	NECJ	179 - 96
RD7BK	NECJ	179 - 66
RD7BL	NECJ	177 - 70
RD7BM	NECJ	179 - 10
RD7BN	NECJ	179 -113
RD7CK	NECJ	179 - 71
RD7CL	NECJ	177 - 74
RD7CM	NECJ	179 - 13
RD7CN	NECJ	179 -114
RD7DK	NECJ	379 -104
RD7DLM	NECJ	379 - 3
RD7DMN	NECJ	379 -112
RD7.5EB	NECE	180 - 33
RD7.5EB1	NECJ	179 - 29
RD7.5EB2	NECJ	179 - 89
RD7.5EC	NECE	181 - 50
RD7.5EL	NECJ	179 - 86
RD7.5EL1	NECJ	179 - 30
RD7.5EL2	NECJ	179 - 90
RD7.5EL3	NECJ	179 -119
RD7.5EN	NECJ	179 - 87
RD7.5EN1	NECJ	179 - 31
RD7.5EN2	NECJ	179 - 91
RD7.5EN3	NECJ	179 -120
RD7.5FB	NECE	179 -118
RD7.5FB1	♦NECJ	179 - 75
RD7.5FB2	♦NECJ	179 - 94
RD7.5FB3	♦NECJ	180 -195
RD7.5FC	NECE	181 - 55
RD7.5JB	NECE	179 -203
RD7.5JSB(A)	♦NECJ	179 -204
RD7.5JSB1(A)	♦NECJ	179 - 85
RD7.5JSB2(A)	♦NECJ	179 -116
RD7.5JSB3(A)	♦NECJ	181 - 9
RD7.5MB	NECE	179 -138
	NECJ	
RD7.5MB1	NECJ	179 - 80
RD7.5MB2	NECJ	179 -139
RD7.5MB3	NECJ	181 - 10
RD7.5P	♦NECJ	180 -109
RD8.2EB	♦NECE	182 - 11
RD8.2EB1	NECJ	181 - 38
RD8.2EB2	NECJ	181 - 56
RD8.2EB3	NECJ	182 -189
RD8.2EC	♦NECE	183 -174
RD8.2EL	NECJ	181 - 59
RD8.2EL1	NECJ	181 - 39
RD8.2EL2	NECJ	181 - 57
RD8.2EL3	NECJ	182 -190
RD8.2EN	NECJ	181 - 60
RD8.2EN1	NECJ	181 - 40
RD8.2EN2	NECJ	181 - 58
RD8.2EN3	NECJ	182 -191
RD8.2EW	NECJ	182 - 31
RD8.2FB	NECE	182 -104
RD8.2FB1	♦NECJ	181 - 45
RD8.2FB2	♦NECJ	181 - 87
RD8.2FB3	♦NECJ	183 - 5
RD8.2FC	NECE	183 -197
RD8.2JB	NECE	181 -182
RD8.2JSB(A)	♦NECJ	181 -183
RD8.2JSB1(A)	♦NECJ	181 - 54
RD8.2JSB2(A)	♦NECJ	181 - 96
RD8.2JSB3(A)	♦NECJ	183 - 59
RD8.2MB	NECE	181 -115
	NECJ	
RD8.2MB1	NECJ	181 - 63
RD8.2MB2	NECJ	181 -117
RD8.2MB3	NECJ	183 - 72
RD8.2P	♦NECJ	182 - 92
RD9A	♦APD	183 -191
RD9AK	NECJ	183 -128
RD9AL	NECJ	181 - 64
RD9AM	NECJ	183 -129
RD9AN	NECJ	186 - 68
RD9BK	NECJ	183 -185
RD9BL	NECJ	181 - 83
RD9BM	NECJ	183 -186
RD9BN	NECJ	186 - 69
RD9CK	NECJ	183 -187
RD9CL	NECJ	181 - 86
RD9CM	NECJ	183 -188

TYPE No.	MFRS	Pg&Line
RD9CN	NECJ	186 - 90
RD9DK	NECJ	380 -148
RD9DLM	NECJ	380 -138
RD9DMN	NECJ	381 - 2
RD9.1EB	♦NECE	185 - 46
RD9.1EB1	NECJ	183 -107
RD9.1EB2	NECJ	183 -198
RD9.1EB3	NECJ	184 -102
RD9.1EC	♦NECE	186 -116
RD9.1EL	NECJ	183 -199
RD9.1EL1	NECJ	183 -108
RD9.1EL2	NECJ	183 -200
RD9.1EL3	NECJ	184 -103
RD9.1EN	NECJ	183 -201
RD9.1EN1	NECJ	183 -109
RD9.1EN2	NECJ	183 -202
RD9.1EN3	NECJ	184 -104
RD9.1EW	NECJ	185 - 65
RD9.1FB	NECE	184 -101
RD9.1FB1	♦NECJ	183 -111
RD9.1FB2	♦NECJ	183 -210
RD9.1FB3	♦NECJ	186 - 23
RD9.1FC	NECE	186 -122
RD9.1JB	NECE	185 - 14
RD9.1JSB(A)	♦NECJ	185 - 15
RD9.1JSB1(A)	♦NECJ	183 -195
RD9.1JSB2(A)	♦NECJ	184 -100
RD9.1JSB3(A)	♦NECJ	186 - 62
RD9.1MB	NECE	184 -133
	NECJ	
RD9.1MB1	NECJ	183 -204
RD9.1MB2	NECJ	184 -134
RD9.1MB3	NECJ	186 - 67
RD9.1P	♦NECJ	185 -124
RD10EB1	NECJ	186 - 63
RD10EB2	NECJ	186 -119
RD10EB3	NECJ	186 -162
RD10EB	♦NECE	187 - 92
RD10EC	♦NECE	188 -127
	♦NECJ	
RD10EL1	NECJ	186 - 64
RD10EL2	NECJ	186 -120
RD10EL3	NECJ	186 -163
RD10EL4	NECJ	188 - 96
RD10EL	NECJ	186 -135
RD10EN1	NECJ	186 - 65
RD10EN2	NECJ	186 -121
RD10EN3	NECJ	186 -164
RD10EN	NECJ	186 -136
RD10FB1	♦NECJ	186 - 89
RD10FB2	♦NECJ	186 -133
RD10FB3	♦NECJ	187 -152
RD10FB	NECE	187 -198
RD10FC	NECE	188 -130
	NECJ	
RD10JB	NECE	187 - 58
RD10JSB1(A)	♦NECJ	186 -124
RD10JSB2(A)	♦NECJ	186 -167
RD10JSB3(A)	♦NECJ	188 -101
RD10JSB(A)	♦NECJ	187 - 59
RD10MB1	NECJ	186 -126
RD10MB2	NECJ	186 -195
RD10MB3	NECJ	188 -103
RD10MB	NECE	186 -193
	NECJ	
RD10P	♦NECJ	187 -184
RD11A	♦APD	188 -116
RD11AK	NECJ	188 -117
RD11AL	NECJ	186 -137
RD11AM	NECJ	188 - 93
RD11AN	NECJ	189 -201
RD11BK	NECJ	188 -120
RD11BL	NECJ	186 -153
RD11BM	NECJ	188 -111
RD11BN	NECJ	190 - 9
RD11CK	NECJ	188 -122
RD11CL	NECJ	186 -156
RD11CM	NECJ	188 -113
RD11CN	NECJ	190 - 12
RD11DK	NECJ	381 -172
RD11DLM	NECJ	381 -170
RD11DMN	NECJ	381 -176
RD11EB1	NECJ	188 -106
RD11EB2	NECJ	188 -133
RD11EB3	NECJ	190 - 3
RD11EB	♦NECE	189 - 33
RD11EC	♦NECE	190 - 35
RD11EL1	NECJ	188 -107
RD11EL2	NECJ	188 -134
RD11EL3	NECJ	190 - 4
RD11EL	NECJ	188 -135
RD11EN1	NECJ	188 -108
RD11EN2	NECJ	188 -136
RD11EN3	NECJ	190 - 5
RD11EN	NECJ	188 -137
RD11FB1	♦NECJ	188 -112
RD11FB2	♦NECJ	188 -139
RD11FB3	♦NECJ	190 - 10
RD11FB	NECE	189 - 96
RD11FC	NECE	190 - 37
RD11JB	NECE	189 - 2
RD11JSB1(A)	♦NECJ	188 -125
RD11JSB2(A)	♦NECJ	188 -144
RD11JSB3(A)	♦NECJ	190 - 18
RD11JSB(A)	♦NECJ	189 - 3
RD11MB1	NECJ	188 -131
RD11MB2	NECJ	188 -160
RD11MB3	NECJ	190 - 20
RD11MB	NECE	188 -159
	NECJ	
RD11P	♦NECJ	189 - 97
RD12EB1	NECJ	190 - 22
RD12EB2	NECJ	190 - 41
RD12EB3	NECJ	191 -184

TYPE No.	MFRS	Pg&Line
RD12EB	♦NECE	190 -205
RD12EC	♦NECE	192 - 2
RD12EL1	NECJ	190 - 23
RD12EL2	NECJ	190 - 42
RD12EL3	NECJ	191 -185
RD12EL	NECJ	190 - 43
RD12EN1	NECJ	190 - 24
RD12EN2	NECJ	190 - 44
RD12EN3	NECJ	191 -186
RD12EN	NECJ	190 - 45
RD12FB1	♦NECJ	190 - 28
RD12FB2	♦NECJ	190 - 78
RD12FB3	♦NECJ	191 -188
RD12FB	NECE	191 - 65
RD12FC	NECE	192 - 26
RD12JB	NECE	190 -172
RD12JSB1(A)	♦NECJ	190 - 31
RD12JSB2(A)	♦NECJ	190 - 85
RD12JSB3(A)	♦NECJ	191 -192
RD12JSB(A)	♦NECJ	190 -173
RD12MB1	NECJ	190 - 38
RD12MB2	NECJ	190 -107
RD12MB3	NECJ	191 -193
RD12MB	NECE	190 -105
	NECJ	
RD12P	♦NECJ	191 - 66
RD13A	♦APD	192 - 29
RD13AK	NECJ	192 - 15
RD13AL	NECJ	190 - 84
RD13AM	NECJ	192 - 16
RD13AN	NECJ	193 -139
RD13BK	NECJ	192 - 24
RD13BL	NECJ	190 - 88
RD13BM	NECJ	192 - 25
RD13BN	NECJ	193 -141
RD13CK	NECJ	192 - 27
RD13CL	NECJ	190 - 89
RD13CM	NECJ	192 - 28
RD13CN	NECJ	193 -143
RD13DK	NECJ	382 -183
RD13DLM	NECJ	382 -181
RD13DMN	NECJ	383 - 87
RD13EB1	NECJ	191 -198
RD13EB2	NECJ	192 - 73
RD13EB3	NECJ	193 -131
RD13EB	♦NECE	192 -170
RD13EC	♦NECE	194 - 67
RD13EL1	NECJ	191 -199
RD13EL2	NECJ	192 - 74
RD13EL3	NECJ	193 -132
RD13EL	NECJ	192 - 75
RD13EN1	NECJ	191 -200
RD13EN2	NECJ	192 - 76
RD13EN3	NECJ	197 - 53
RD13EN	NECJ	192 - 77
RD13FB1	♦NECJ	192 - 7
RD13FB2	♦NECJ	192 - 82
RD13FB3	♦NECJ	193 -137
RD13FB	NECE	193 -127
RD13FC	NECE	194 - 59
RD13JB	NECE	192 -141
RD13JSB1(A)	♦NECJ	192 - 20
RD13JSB2(A)	♦NECJ	193 -124
RD13JSB3(A)	♦NECJ	193 -150
RD13JSB(A)	♦NECJ	192 -142
RD13MB1	NECJ	192 - 14
RD13MB2	NECJ	192 - 98
RD13MB3	NECJ	193 -138
RD13MB	NECE	192 - 97
	NECJ	
RD13P	♦NECJ	193 - 14
RD15EB1	NECJ	193 -152
RD15EB2	NECJ	194 - 62
RD15EB3	NECJ	194 - 88
RD15EB	♦NECE	194 -190
RD15EC	♦NECE	195 -186
RD15EL1	NECJ	193 -153
RD15EL2	NECJ	194 - 63
RD15EL3	NECJ	194 - 89
RD15EL	NECJ	194 - 64
RD15EN1	NECJ	193 -154
RD15EN2	NECJ	194 - 65
RD15EN3	NECJ	194 - 90
RD15EN	NECJ	194 - 66
RD15FB1	♦NECJ	193 -158
RD15FB3	♦NECJ	194 - 96
RD15FB	NECE	194 - 92
RD15FC	NECE	195 -200
RD15JSB1(A)	♦NECJ	194 - 57
RD15JSB2(A)	♦NECJ	194 - 71
RD15JSB3(A)	♦NECJ	195 -183
RD15JSB(A)	♦NECJ	194 -165
RD15MB1	NECJ	194 - 60
RD15MB2	NECJ	194 - 74
RD15MB3	NECJ	194 -116
RD15MB	NECE	194 -114
	NECJ	
RD15P	♦NECJ	195 - 64
RD16A	♦APD	196 - 12
RD16AK	NECJ	196 - 1
RD16AL	NECJ	194 - 75
RD16AM	NECJ	196 - 2
RD16AN	NECJ	197 - 88
RD16BK	NECJ	196 - 7
RD16BL	NECJ	194 - 80
RD16BM	NECJ	196 - 8
RD16BN	NECJ	197 - 89
RD16CK	NECJ	196 - 10
RD16CL	NECJ	194 - 84
RD16CM	NECJ	196 - 11
RD16CN	NECJ	197 - 90
RD16DK	NECJ	384 - 69
RD16DLM	NECJ	384 - 68
RD16DMN	NECJ	384 -164

TYPE No.	MFRS	Pg&Line
RD16EB1	NECJ	195 -177
RD16EB2	NECJ	195 -192
RD16EB3	NECJ	197 - 58
RD16EB	♦NECE	196 -100
RD16EC	♦NECE	197 -173
RD16EL1	NECJ	195 -178
RD16EL2	NECJ	195 -193
RD16EL3	NECJ	197 - 54
RD16EL	NECJ	195 -194
RD16EN1	NECJ	195 -179
RD16EN2	NECJ	195 -195
RD16EN3	NECJ	197 - 55
RD16EN	NECJ	195 -196
RD16FB1	♦NECJ	195 -187
RD16FB2	♦NECJ	196 - 15
RD16FB3	♦NECJ	197 - 68
RD16FB	NECE	197 - 63
RD16FC	NECE	197 -177
RD16JB	NECE	196 - 70
RD16JSB1(A)	♦NECJ	196 - 5
RD16JSB2(A)	♦NECJ	197 - 60
RD16JSB3(A)	♦NECJ	197 - 78
RD16JSB(A)	♦NECJ	196 - 71
RD16MB1	NECJ	195 -189
RD16MB2	NECJ	196 - 28
RD16MB3	NECJ	197 - 70
RD16MB	NECE	196 - 27
	NECJ	
RD16P	♦NECJ	196 -157
RD18EB1	NECJ	197 - 72
RD18EB2	NECJ	197 -168
RD18EB3	NECJ	199 - 81
RD18EB	♦NECE	198 -104
RD18EC	♦NECE	199 -167
RD18EL1	NECJ	197 - 73
RD18EL2	NECJ	197 -169
RD18EL3	NECJ	199 - 82
RD18EL	NECJ	197 -170
RD18EN1	NECJ	197 - 74
RD18EN2	NECJ	197 -174
RD18EN3	NECJ	199 - 83
RD18EN	NECJ	197 -171
RD18FB1	♦NECJ	197 - 85
RD18FB2	♦NECJ	197 -181
RD18FB3	♦NECJ	198 -147
RD18FB	NECE	198 - 3
RD18FC	NECE	199 -169
RD18JB	NECE	198 - 75
RD18JSB1(A)	♦NECJ	197 -165
RD18JSB2(A)	♦NECJ	198 - 57
RD18JSB3(A)	♦NECJ	199 - 98
RD18JSB(A)	♦NECJ	198 - 76
RD18MB1	NECJ	197 - 96
RD18MB2	NECJ	198 - 25
RD18MB3	NECJ	199 - 86
RD18MB	NECE	198 - 23
	NECJ	
RD18P	♦NECJ	198 -173
RD19A	♦APD	199 -110
RD19AK	NECJ	199 -111
RD19AL	NECJ	199 - 77
RD19AM	NECJ	200 - 7
RD19BK	NECJ	199 -139
RD19BL	NECJ	199 - 78
RD19BM	NECJ	200 - 12
RD19CK	NECJ	199 -152
RD19CL	NECJ	199 - 80
RD19CM	NECJ	200 - 14
RD19DK	NECJ	385 -147
RD19DLM	NECJ	385 -148
RD20EB1	NECJ	199 - 90
RD20EB2	NECJ	199 -163
RD20EB3	NECJ	200 - 8
RD20EB	♦NECE	200 -103
RD20EC	♦NECE	201 - 91
	NECJ	
RD20EL1	NECJ	199 - 91
RD20EL2	NECJ	199 -164
RD20EL3	NECJ	200 - 9
RD20EL4	NECJ	201 - 69
RD20EL	NECJ	200 - 2
RD20EN1	NECJ	199 - 92
RD20EN2	NECJ	199 -165
RD20EN3	NECJ	200 - 10
RD20EN4	NECJ	201 - 70
RD20EN	NECJ	200 - 3
RD20FB1	♦NECJ	199 -103
RD20FB2	♦NECJ	200 - 4
RD20FB3	♦NECJ	200 -141
RD20FB	NECE	200 -176
RD20FC	NECE	201 - 94
	NECJ	
RD20JB	NECE	200 - 73
RD20JSB1(A)	♦NECJ	199 -172
RD20JSB2(A)	♦NECJ	200 - 19
RD20JSB3(A)	♦NECJ	201 - 78
RD20JSB(A)	♦NECJ	200 - 74
RD20MB1	NECJ	200 - 6
RD20MB2	NECJ	200 - 33
RD20MB3	NECJ	201 - 75
RD20MB	NECE	200 - 32
	NECJ	
RD20P	♦NECJ	200 -163
RD22EB1	NECJ	201 - 80
RD22EB2	NECJ	201 - 88
RD22EB3	NECJ	201 -107
RD22EB4	NECJ	201 -189
RD22EB	NECE	201 -208
RD22EC	NECE	203 - 1
RD22EL1	NECJ	201 - 81
RD22EL2	NECJ	201 - 89
RD22EL3	NECJ	201 -108
RD22EL4	NECJ	201 -190
RD22EL	NECJ	201 - 98

TYPE No.	MFRS	Pg&Line
RD22FB1	♦NECJ	201 - 84
RD22FB2	♦NECJ	201 -110
RD22FB	NECE	202 - 63
RD22FC	NECE	203 - 3
RD22JB	NECE	201 -179
RD22JSB1(A)	♦NECJ	201 - 97
RD22JSB2(A)	♦NECJ	202 -176
RD22JSB3(A)	♦NECJ	202 -184
RD22JSB(A)	♦NECJ	201 -180
RD22MB1	NECJ	201 -106
RD22MB2	NECJ	201 -130
RD22MB3	NECJ	202 -183
RD22MB	NECE	201 -128
	NECJ	
RD22P	♦NECJ	202 - 64
RD24A	♦APD	203 - 16
RD24AK	NECJ	203 - 17
RD24AL	NECJ	201 - 99
RD24AM	NECJ	203 - 4
RD24AN	NECJ	204 -132
RD24BK	NECJ	203 - 21
RD24BL	NECJ	201 -104
RD24BM	NECJ	203 - 11
RD24BN	NECJ	204 -133
RD24CK	NECJ	203 - 22
RD24CL	NECJ	201 -105
RD24CM	NECJ	203 - 12
RD24CN	NECJ	204 -135
RD24DK	NECJ	386 -189
RD24DLM	NECJ	386 -184
RD24DMN	NECJ	387 - 96
RD24EB1	NECJ	202 -185
RD24EB2	NECJ	202 -197
RD24EB3	NECJ	203 - 25
RD24EB4	NECJ	204 - 69
RD24EB	NECE	203 -105
RD24EC	NECE	204 -143
RD24EL1	NECJ	202 -186
RD24EL2	NECJ	202 -198
RD24EL3	NECJ	203 - 26
RD24EL4	NECJ	204 - 70
RD24EL	NECJ	203 - 9
RD24FB1	♦NECJ	202 -193
RD24FB2	♦NECJ	203 - 28
RD24FB3	♦NECJ	204 - 78
RD24FB	NECE	204 - 72
RD24FC	NECE	204 -145
RD24JB	NECE	203 - 80
RD24JSB1(A)	♦NECJ	203 - 8
RD24JSB2(A)	♦NECJ	204 - 67
RD24JSB3(A)	♦NECJ	204 - 86
RD24JSB(A)	♦NECJ	204 - 68
RD24MB1	NECJ	203 - 15
RD24MB2	NECJ	204 - 76
RD24MB3	NECJ	204 - 93
RD24MB	NECE	203 - 44
	NECJ	
RD24P	♦NECJ	203 -162
RD27EB1	NECJ	204 - 79
RD27EB2	NECJ	204 -136
RD27EB3	NECJ	204 -151
RD27EB4	NECJ	204 -163
RD27EB	NECE	205 - 37
RD27EC	NECE	206 - 82
RD27EL1	NECJ	204 - 80
RD27EL2	NECJ	204 -137
RD27EL3	NECJ	204 -152
RD27EL4	NECJ	204 -164
RD27EL	NECJ	204 -147
RD27FB1	♦NECJ	204 -134
RD27FB2	♦NECJ	204 -154
RD27FB3	♦NECJ	206 - 14
RD27FB	NECE	205 -113
RD27FC	NECE	206 - 84
RD27JB	NECE	205 - 13
RD27JSB1(A)	♦NECJ	204 -140
RD27JSB2(A)	♦NECJ	204 -160
RD27JSB3(A)	♦NECJ	206 - 19
RD27JSB(A)	♦NECJ	205 - 14
RD27MB	NECJ	204 -183
RD27P	♦NECJ	205 -100
RD29A	♦APD	206 - 73
RD29AK	NECJ	206 - 74
RD29AM	NECJ	206 - 65
RD29AN	NECJ	207 -140
RD29BK	NECJ	206 - 76
RD29BL	NECJ	204 -158
RD29BM	NECJ	206 - 66
RD29BN	NECJ	207 -141
RD29CK	NECJ	206 - 77
RD29CL	NECJ	204 -159
RD29CM	NECJ	206 - 67
RD29CN	NECJ	207 -142
RD29DK	NECJ	388 - 48
RD29DLM	NECJ	388 - 39
RD29DMN	NECJ	388 - 49
RD30EB1	NECJ	206 - 15
RD30EB2	NECJ	206 - 68
RD30EB3	NECJ	206 - 86
RD30EB4	NECJ	206 - 95
RD30EB	NECE	206 -173
RD30EC	NECE	207 -169
RD30EL1	NECJ	206 - 16
RD30EL2	NECJ	206 - 69
RD30EL3	NECJ	206 - 87
RD30EL4	NECJ	206 - 96
RD30EL	NECJ	206 - 78
RD30FB1	♦NECJ	206 - 64
RD30FB2	♦NECJ	206 - 91
RD30FB3	♦NECJ	207 -144
RD30FB	NECE	207 - 37
RD30FC	NECE	207 -172
RD30JB	NECE	206 -148
RD30JSB1(A)	♦NECJ	206 - 85

Δ-Registered with JEDEC by this manufacturer

♦-Mfr's data sheet available in microfilm service

1. TYPE No. CROSS INDEX

IN TYPE NUMBER SEQUENCE

TYPE No.	MFRS	Pg&Line
RD30JSB2(A)	♦NECJ	206 -102
RD30JSB3(A)	♦NECJ	207 -147
RD30JSB(A)	♦NECJ	206 -149
RD30MB	NECJ	206 -116
RD30P	♦NECJ	207 - 25
RD33EB1	NECJ	206 - 92
RD33EB2	NECJ	207 -153
RD33EB3	NECJ	207 -160
RD33EB4	NECJ	207 -175
RD33EB	NECE	208 - 61
RD33EC	NECE	209 - 62
RD33EL1	NECJ	206 - 93
RD33EL2	NECJ	207 -154
RD33EL3	NECJ	207 -161
RD33EL4	NECJ	207 -176
RD33EL	NECJ	207 -157
RD33FB1	♦NECJ	207 -156
RD33FB2	♦NECJ	207 -173
RD33FB3	♦NECJ	209 - 28
RD33FB	NECE	208 -132
RD33FC	NECE	209 - 67
RD33JB	NECE	208 - 36
RD33JSB1(A)	♦NECJ	207 -166
RD33JSB2(A)	♦NECJ	207 -181
RD33JSB3(A)	♦NECJ	209 - 38
RD33JSB(A)	♦NECJ	208 - 37
RD33MB	NECJ	207 -203
RD33P	♦NECJ	208 -119
RD35AE	NECJ	211 -118
RD35AK	NECJ	209 - 90
RD35AL	NECJ	207 -174
RD35AM	NECJ	209 - 52
RD35AN	NECJ	210 - 95
RD35BK	NECJ	209 - 64
RD35BL	NECJ	207 -178
RD35BM	NECJ	209 - 65
RD35BN	NECJ	210 -109
RD35CK	NECJ	209 - 68
RD35CL	NECJ	207 -179
RD35CM	NECJ	209 - 69
RD35CN	NECJ	210 -112
RD35DK	NECJ	389 - 65
RD35DLM	NECJ	389 - 63
RD35DMN	NECJ	389 -171
RD36EB1	NECJ	207 -184
RD36EB2	NECJ	209 - 33
RD36EB3	NECJ	209 - 46
RD36EB4	NECJ	209 - 53
RD36EB	NECE	209 -137
RD36EC	NECE	210 -107
RD36EL1	NECJ	207 -185
RD36EL2	NECJ	209 - 34
RD36EL3	NECJ	209 - 47
RD36EL4	NECJ	209 - 54
RD36EL	NECJ	209 - 39
RD36FB1	♦NECJ	209 - 44
RD36FB2	♦NECJ	209 - 70
RD36FB3	♦NECJ	210 - 82
RD36FB	NECE	209 -182
RD36FC	NECE	210 -111
RD36JB	NECE	209 -117
RD36JSB1(A)	♦NECJ	209 - 58
RD36JSB2(A)	♦NECJ	209 - 77
RD36JSB3(A)	♦NECJ	210 - 87
RD36JSB(A)	♦NECJ	209 -118
RD36MB	NECJ	209 - 89
RD36P	♦NECJ	209 -183
RD39EB1	NECJ	209 - 72
RD39EB2	NECJ	210 - 83
RD39EB3	NECJ	210 - 88
RD39EB4	NECJ	210 -102
RD39EB	NECE	210 -173
RD39EC1	NECJ	210 -113
RD39EC2	NECJ	211 -114
RD39EC3	NECJ	211 -119
RD39EC	NECE	211 -138
RD39EL1	NECJ	209 - 73
RD39EL2	NECJ	210 - 84
RD39EL3	NECJ	210 - 89
RD39EL4	NECJ	210 -103
RD39EL5	NECJ	210 -114
RD39EL6	NECJ	211 -115
RD39EL7	NECJ	211 -120
RD39EL	NECJ	210 -105
RD39FB1	♦NECJ	210 - 91
RD39FB2	♦NECJ	210 -110
RD39FB3	♦NECJ	211 -116
RD39FB	NECE	211 - 17
RD39FC	NECE	211 -140
	NECJ	
RD39JB	NECE	210 -154
RD39JSB1(A)	♦NECJ	210 -106
RD39JSB2(A)	♦NECJ	210 -142
RD39JSB3(A)	♦NECJ	211 -121
RD39JSB(A)	♦NECJ	210 -155
RD39MB	NECJ	210 -128
RD39P	♦NECJ	211 - 18
RD43EB	NECE	211 -190
	♦NECJ	
RD43FB	NECE	212 - 28
	NECJ	
RD47EB	NECE	212 -201
	♦NECJ	
RD47FB	NECE	213 - 43
	NECJ	
RD51EB	NECE	214 - 6
	♦NECJ	
RD51FB	NECE	214 - 40
	NECJ	
RD56EB	NECE	214 -191
	♦NECJ	
RD56FB	NECE	215 - 26
	NECJ	

TYPE No.	MFRS	Pg&Line
RD62EB	NECE	215 -201
	♦NECJ	
RD62FB	NECE	216 - 33
	NECJ	
RD68EB	NECE	216 -173
	♦NECJ	
RD68FB	NECE	217 - 13
	NECJ	
RD75EB	NECE	217 -161
	♦NECJ	
RD75FB	NECE	217 -195
	NECJ	
RD82EB	NECE	218 -143
	♦NECJ	
RD82FB	NECE	218 -175
	NECJ	
RD91EB	NECE	219 -129
	♦NECJ	
RD100EB	NECE	220 - 85
	♦NECJ	
RD110EB	NECJ	221 - 49
RD120EB	NECJ	221 -191
RD130EB	NECJ	222 -142
RD140EB	NECJ	223 - 84
RD150EB	NECJ	223 -168
RD151	♦DII	361 -130
RD151G	♦DII	361 -144
RD152	♦DII	361 -158
RD152G	♦DII	361 -170
RD153	♦DII	361 -185
RD153G	♦DII	362 - 2
RD154	♦DII	362 - 20
RD154G	♦DII	362 - 39
RD155	♦DII	362 - 56
RD155G	♦DII	362 - 73
RD156	♦DII	362 - 82
RD156G	♦DII	362 -100
RD157	♦DII	362 -107
RD157G	♦DII	362 -117
RD160EB	NECJ	224 -120
RD170EB	NECJ	225 - 52
RD180EB	NECJ	225 -124
RD190EB	NECJ	226 - 73
RD200EB	NECJ	226 -129
RE19	♦THEF	430 - 87
RF1	♦SAKJ	247 -163
RF1A	♦SAKJ	247 -184
RF1Z	♦SAKJ	247 -133
RF160A	♦EDI	256 -123
RF160B	♦EDI	256 -124
RF200A	♦EDI	256 -137
RF200B	♦EDI	256 -139
RG1A	♦GIC	252 - 96
RG1B	♦GIC	253 - 62
RG1D	♦GIC	254 - 55
RG1F	♦GIC	254 -124
RG1G	♦GIC	254 -183
RG1H	♦GIC	255 - 40
RG1J	♦GIC	255 - 87
RG1K	♦GIC	255 -186
RG1M	♦GIC	256 - 51
RG2A	♦GIC	252 - 97
RG2B	♦GIC	253 - 63
RG2D	♦GIC	254 - 56
RG2F	GIC	254 -125
RG2G	♦GIC	254 -184
RG2H	GIC	255 - 41
RG2J	♦GIC	255 - 88
RG2K	♦GIC	255 -187
RG2M	♦GIC	256 - 52
RG3A	♦GIC	252 -116
	♦SSI	
RG3B	♦GIC	253 - 84
	♦SSI	
RG3D	♦GIC	254 - 82
	♦SSI	
RG3F	GIC	259 -198
RG3G	♦GIC	254 -214
	♦SSI	
RG3H	GIC	260 -128
RG3J	♦GIC	255 -101
	♦SSI	
RG3K	♦GIC	255 -196
	♦SSI	
RG3M	♦GIC	256 - 53
	♦SSI	
RG4A	♦GIC	252 - 98
RG4B	♦GIC	253 - 64
RG4D	♦GIC	254 - 57
RG4G	♦GIC	254 -185
RG4J	♦GIC	255 -111
RG4K	♦GIC	255 -201
RG4M	♦GIC	256 - 54
RGIB3500	♦GIC	371 - 20
RGIB3501	♦GIC	371 - 39
RGIB3502	♦GIC	371 - 58
RGIB3504	♦GIC	371 - 75
RGIB3506	♦GIC	371 - 91
RGM30A	♦GIC	300 - 17
RGM30B	♦GIC	300 - 46
RGM30D	♦GIC	300 - 80
RGM30G	♦GIC	300 -117
RGM30J	♦GIC	300 -143
RGM30K	♦GIC	300 -158
RGM30M	♦GIC	403 -151
RGP01-10	♦GIC	247 -203
RGP01-12	♦GIC	247 -207
RGP01-14	♦GIC	247 -208
RGP01-16	♦GIC	247 -214
RGP01-18	GIC	247 -216
RGP01-20	GIC	248 - 1
RGP10A	♦GIC	265 -122
RGP10B	♦GIC	253 - 65
RGP10D	♦GIC	254 - 58

TYPE No.	MFRS	Pg&Line
RGP10F	GIC	254 -126
RGP10G	♦GIC	254 -186
RGP10H	GIC	255 - 42
RGP10J	♦GIC	255 - 89
RGP10K	♦GIC	255 -175
RGP10M	♦GIC	256 - 28
RGP15-10	♦GIC	256 - 37
RGP15-12	♦GIC	256 - 88
RGP15-14	♦GIC	256 -100
RGP15-15	♦GIC	256 -113
RGP15-16	♦GIC	256 -125
RGP15-18	♦GIC	256 -129
RGP15-20	♦GIC	256 -140
RGP15A	♦GIC	252 - 99
RGP15B	♦GIC	253 - 66
RGP15D	♦GIC	254 - 59
RGP15F	♦GIC	254 -127
RGP15G	♦GIC	254 -187
RGP15H	♦GIC	255 - 43
RGP15J	♦GIC	255 - 90
RGP15K	♦GIC	255 -176
RGP15M	♦GIC	256 - 29
RGP20A	♦GIC	252 -100
RGP20B	♦GIC	253 - 67
RGP20D	♦GIC	254 - 60
RGP20F	GIC	254 -128
RGP20G	♦GIC	254 -188
RGP20H	GIC	255 - 44
RGP20J	♦GIC	255 -112
RGP20K	♦GIC	255 -202
RGP20M	♦GIC	256 - 55
RGP25A	♦GIC	252 -101
RGP25B	♦GIC	253 - 68
RGP25D	♦GIC	254 - 61
RGP25F	GIC	254 -129
RGP25G	♦GIC	254 -189
RGP25H	GIC	255 - 45
RGP25J	♦GIC	255 -113
RGP25K	♦GIC	255 -203
RGP25M	♦GIC	256 - 56
RGP30A	♦GIC	252 -102
RGP30B	♦GIC	253 - 69
RGP30D	♦GIC	254 - 62
RGP30F	♦GIC	254 -130
RGP30G	♦GIC	254 -190
RGP30H	♦GIC	255 - 46
RGP30J	♦GIC	255 -114
RGP30K	♦GIC	255 -204
RGP30M	♦GIC	256 - 57
RGP80A	♦GIC	293 - 66
RGP80B	♦GIC	293 - 73
RGP80D	♦GIC	293 - 87
RGP80G	♦GIC	293 -105
RGP80J	♦GIC	293 -116
RGP80K	♦GIC	293 -124
RGP80M	♦GIC	403 - 36
RGP5005	♦GIC	246 - 17
RGP5010	♦GIC	247 - 88
RGP5020	♦GIC	247 -138
RGP5040	♦GIC	247 -169
RGP5060	♦GIC	247 -192
RGP5080	♦GIC	247 -199
RGP5100	♦GIC	247 -204
RGPP5A	♦GIC	445 - 85
RGPP5B	♦GIC	445 - 86
RGPP5D	♦GIC	445 - 87
RGPP5G	♦GIC	445 - 88
RGPP5J	♦GIC	445 - 89
RH1	♦SAKJ	277 -144
RH1A	♦SAKJ	277 -170
RH1B	♦SAKJ	277 -190
RH1C	♦SAKJ	401 -106
RH1Z	♦SAKJ	277 -117
RH2F	♦SAKJ	247 -212
RHC5-8	EDI	240 -198
RHC5-10	EDI	240 -207
RHC5-12	EDI	240 -212
RHC5-15	EDI	240 -215
RHC5-20	EDI	240 -220
RHC5-25	EDI	241 - 5
RHC5-30	EDI	241 - 10
RHC5-35	EDI	241 - 15
RHC5-40	EDI	241 - 21
RHC10-8	EDI	240 -199
RHC10-10	EDI	240 -208
RHC10-12	EDI	240 -213
RHC10-15	EDI	240 -216
RHC10-20	EDI	241 - 1
RHC10-25	EDI	241 - 6
RHC10-30	EDI	241 - 11
RHC10-35	EDI	241 - 16
RHC10-40	EDI	241 - 22
RHC25-8	EDI	240 -200
RHC25-10	EDI	240 -209
RHC25-12	EDI	240 -214
RHC25-15	EDI	240 -217
RHC25-20	EDI	241 - 2
RHC25-25	EDI	241 - 7
RHC25-30	EDI	241 - 12
RHC25-35	EDI	241 - 17
RHC25-40	EDI	241 - 23
RHP3	♦EDI	240 -179
RHP4	♦EDI	240 -187
RHP5	♦EDI	240 -189
RHP6	♦EDI	240 -193
RHP7	♦EDI	240 -195
RHP8	♦EDI	240 -201
RHP9	♦EDI	240 -204
RHP10	♦EDI	240 -210
RHP15	♦EDI	240 -218
RHP20	♦EDI	241 - 3
RHP25	♦EDI	241 - 8
RHP30	♦EDI	241 - 13
RHP35	♦EDI	241 - 18

TYPE No.	MFRS	Pg&Line
RHP40	♦EDI	241 - 24
RHP45	♦EDI	241 - 26
RHP50	♦EDI	241 - 28
RIB005	♦EDI	252 -103
RIB010	♦EDI	253 - 70
RIB020	♦EDI	254 - 63
RIB040	♦EDI	254 -191
RIB060	♦EDI	255 - 91
RIB080	♦EDI	255 -188
RIB100	♦EDI	256 - 38
RK300A	♦EDI	251 - 83
RK300B	♦EDI	251 - 84
RK400A	♦EDI	251 - 85
RK400B	♦EDI	251 - 86
RK500A	♦EDI	251 - 87
RK500B	♦EDI	251 - 88
RK600A	♦EDI	251 - 89
RK600B	♦EDI	251 - 90
RKBC301	♦GIC	364 -107
RKBC302	♦GIC	364 -117
RKBC304	♦GIC	364 -134
RKBC306	♦GIC	364 -149
RKBC308	♦GIC	364 -164
RKBC310	♦GIC	364 -179
RKBC501	♦GIC	365 -168
RKBC502	♦GIC	365 -180
RKBC504	♦GIC	365 -192
RKBC506	♦GIC	365 -204
RKBC508	♦GIC	366 - 8
RKBC510	♦GIC	366 - 14
RKBC3005	♦GIC	364 - 93
RKBC5005	♦GIC	365 -160
RKBP02	♦GIC	362 - 3
RKBP04	♦GIC	362 - 40
RKBP005	♦GIC	361 -145
RKBP06	♦GIC	362 - 74
RKBP08	♦GIC	362 -101
RKBP10	♦GIC	362 -118
RKBPC102	♦GIC	364 -126
RKBPC104	♦GIC	364 -143
RKBPC106	♦GIC	364 -158
RKBPC108	♦GIC	364 -173
RKBPC110	♦GIC	364 -184
RKBPC602	GIC	367 - 25
RKBPC606	GIC	367 - 58
RKBPC608	GIC	367 - 75
RKBPC610	GIC	367 - 90
RKBPC802	♦GIC	367 - 26
RKBPC804	♦GIC	367 - 42
RKBPC806	♦GIC	367 - 59
RKBPC808	♦GIC	367 - 76
RKBPC810	♦GIC	367 - 91
RKBPC1005	♦GIC	364 -100
RKBPC6005	GIC	366 -215
RKBPC8005	♦GIC	366 -216
RL061	♦RECT	277 - 88
RL062	♦RECT	277 -102
RL063	♦RECT	277 -118
RL064	♦RECT	277 -145
RL065	♦RECT	277 -171
RL066	♦RECT	277 -191
RL067	♦RECT	401 -107
RL101	♦DII	280 - 24
RL101F	♦DII	238 -104
RL101FG	♦DII	238 -105
RL101G	♦DII	280 - 25
RL102	♦DII	280 -102
RL102F	♦DII	238 -173
RL102FG	♦DII	238 -174
RL102G	♦DII	280 -103
RL103	♦DII	280 -199
RL103F	♦DII	239 - 49
RL103FG	♦DII	239 - 50
RL103G	♦DII	280 -200
RL104	♦DII	281 -105
RL104F	♦DII	239 -155
RL104FG	♦DII	239 -156
RL104G	♦DII	281 -106
RL105	♦DII	281 -218
RL105F	♦DII	240 - 15
RL105FG	♦DII	240 - 16
RL105G	♦DII	281 -219
RL106	♦DII	282 - 83
RL106F	♦DII	240 - 88
RL106FG	♦DII	240 - 89
RL106G	♦DII	282 - 84
RL107F	♦DII	240 -132
RL107FG	♦DII	240 -133
RL107G	♦DII	401 -215
RL151	♦DII	283 - 93
	♦RECT	
RL151G	♦DII	283 -102
	♦RECT	
RL152	♦DII	283 -146
	♦RECT	
RL152G	♦DII	283 -157
	♦RECT	
RL153	♦DII	283 -211
	♦RECT	
RL153G	♦DII	284 - 3
	♦RECT	
RL154	♦DII	284 - 98
	♦RECT	
RL154G	♦DII	284 -110
	♦RECT	
RL155	♦DII	284 -200
	♦RECT	
RL155G	♦DII	284 -212
	♦RECT	
RL156	♦DII	285 - 59
	♦RECT	
RL156G	♦DII	285 - 70
	♦RECT	

TYPE No.	MFRS	Pg&Line
RL157	♦DII	402 - 66
	♦RECT	
RL157G	♦DII	402 - 71
	♦RECT	
RL201	♦DII	285 -214
	♦RECT	
RL201G	♦DII	285 -220
	♦RECT	
RL202	♦DII	286 - 28
	♦RECT	
RL202G	♦DII	286 - 35
	♦RECT	
RL203	♦DII	286 - 69
	♦RECT	
RL203G	♦DII	286 - 76
	♦RECT	
RL204	♦DII	286 -120
	♦RECT	
RL204G	♦DII	286 -125
	♦RECT	
RL205	♦DII	286 -168
RL205G	♦DII	286 -174
	♦RECT	
RL206	♦DII	286 -169
	♦RECT	
RL206G	♦DII	286 -209
	♦RECT	
RL207	♦DII	402 -117
RL207G	♦DII	402 -123
	♦RECT	
RL208	♦RECT	286 -204
RL210	♦RECT	402 -118
RL251	♦DII	286 -215
	♦RECT	
RL251G	♦RECT	287 - 2
RL252	♦DII	231 - 50
	♦RECT	
RL252G	♦RECT	287 - 20
RL253	♦DII	287 - 27
	♦RECT	
RL253G	♦RECT	287 - 41
RL254	♦DII	287 - 55
	♦RECT	
RL254G	♦RECT	287 - 70
RL255	♦DII	287 - 84
	♦RECT	
RL255G	♦RECT	287 - 97
RL256	♦DII	287 -110
	♦RECT	
RL256G	♦RECT	287 -125
RL257	♦DII	402 -127
	♦RECT	
RL257G	♦RECT	402 -143
RM1	♦SAKJ	281 - 76
RM1A	♦SAKJ	281 -192
RM1B	♦SAKJ	279 -125
RM1C	♦SAKJ	401 -137
RM1Z	♦SAKJ	280 -170
RM2	♦SAKJ	282 -217
RM2A	♦SAKJ	282 -218
RM2B	♦SAKJ	283 - 2
RM2C	♦SAKJ	402 - 26
RM2Z	♦SAKJ	282 -179
RM10TA-H	MITJ	372 -209
RM10TA-M	MITJ	372 -204
RM15TA-H	MITJ	373 - 44
RM15TA-M	MITJ	373 - 40
RM25	SAKJ	445 - 90
RM26	SAKJ	445 - 91
RM30DZ-H	MITJ	300 -162
RM30DZ-M	MITJ	300 -125
RM30TA-H	MITJ	373 - 86
RM30TA-M	MITJ	373 - 85
RM60DZ-H	MITJ	303 -200
RM60DZ-M	MITJ	303 -147
RM100DZ-H	MITJ	306 -149
RM100DZ-M	MITJ	306 - 47
RM4001G	♦ITTG	279 -218
RM4002G	♦ITTG	280 - 58
RM4003G	♦ITTG	280 -146
RM4004G	♦ITTG	281 - 54
RM4933	♦ITTG	257 -175
RM4934	♦ITTG	258 - 98
RM4935	♦ITTG	259 - 96
RM4936	♦ITTG	260 - 63
RN820	THEF	298 - 8
RN1120	THEF	403 -120
RO2	♦SAKJ	282 -219
RO2A	♦SAKJ	283 - 19
RO2B	SAKJ	283 - 20
RO2C	SAKJ	402 - 27
RO2Z	♦SAKJ	282 -176
RO20	SLCB	280 -216
RO40	SLCB	281 -121
RO80	SLCB	282 - 95
RP1A	♦SSI	252 -118
RP1B	♦SSI	253 - 86
RP100	♦DIX	238 -106
RP101	♦DIX	238 -175
RP102	♦DIX	239 - 51
RP104	♦DIX	239 -157
RP106	♦DIX	240 - 17
RP108	♦DIX	240 - 90
RP110	♦DIX	240 -134
RP150	♦DIX	238 -107
RP151	♦DIX	238 -176
RP152	♦DIX	239 - 52
RP154	♦DIX	239 -158
RP156	♦DIX	240 - 18
RP158	♦DIX	240 - 91
RP300	♦DIX	238 -108
RP300A	♦GIC	262 - 91
RP300B	♦GIC	262 - 95
RP300D	♦GIC	262 -102

Δ-Registered with JEDEC by this manufacturer

♦-Mfr's data sheet available in microfilm service

1. TYPE No. CROSS INDEX

IN TYPE NUMBER SEQUENCE

TYPE No.	MFRS	Pg&Line
RP300F	♦GIC	259 -199
RP300G	♦GIC	262 -108
RP300H	♦GIC	260 -129
RP300J	♦GIC	262 -114
RP300K	♦GIC	262 -120
RP300M	♦GIC	262 -122
RP301	♦DIX	238 -177
RP302	♦DIX	239 - 53
RP304	♦DIX	239 -159
RP306	♦DIX	240 - 19
RP308	♦DIX	240 - 92
RP600	♦DIX	238 -109
RP601	♦DIX	238 -178
RP602	♦DIX	239 - 54
RP604	♦DIX	239 -160
RP606	♦DIX	240 - 20
RP608	♦DIX	240 - 93
RP610	♦DIX	240 -135
RP1040	THEF	301 -110
RP1140	THEF	403 -177
RP1510	♦DIX	240 -136
RP2040	THEF	301 -133
RP4040	THEF	301 -180
RP6040	THEF	301 -213
RP8040	THEF	302 - 24
RS101	♦DII	360 -103
RS101G	♦DII	360 -104
RS102	♦DII	360 -131
RS102G	♦DII	360 -132
RS103	♦DII	360 -165
RS103G	♦DII	360 -166
RS104	♦DII	360 -200
RS104G	♦DII	360 -201
RS105	♦DII	361 - 22
RS105G	♦DII	361 - 23
RS106	♦DII	361 - 48
RS106G	♦DII	361 - 49
RS107	♦DII	361 - 68
RS107G	♦DII	361 - 69
RS201	♦DII	362 -184
	RECT	
RS201F	♦RECT	362 -185
RS201G	♦DII	362 -186
	♦RECT	
RS202	♦DII	363 - 14
	RECT	
RS202F	♦RECT	363 - 15
RS202G	♦DII	363 - 16
	♦RECT	
RS203	♦DII	363 - 55
	RECT	
RS203F	♦RECT	363 - 56
RS203G	♦DII	363 - 57
	♦RECT	
RS204	♦DII	363 -103
	RECT	
RS204F	♦RECT	363 -104
RS204G	♦DII	363 -105
	♦RECT	
RS205	♦DII	363 -147
	RECT	
RS205F	♦RECT	363 -148
RS205G	♦DII	363 -149
	♦RECT	
RS206	♦DII	363 -186
	RECT	
RS206F	♦RECT	363 -187
RS206G	♦DII	363 -188
	♦RECT	
RS207	♦DII	363 -214
	RECT	
RS207F	♦RECT	363 -215
RS207G	♦DII	363 -216
	♦RECT	
RS401	♦DII	365 - 17
	RECT	
RS401F	♦RECT	290 - 22
RS401G	♦DII	365 - 18
	♦RECT	
RS401L	♦DII	365 - 19
	♦RECT	
RS401LF	♦RECT	365 - 20
RS401LG	♦DII	365 - 21
	♦RECT	
RS402	♦DII	365 - 36
	RECT	
RS402F	♦RECT	365 - 37
RS402G	♦DII	365 - 38
	♦RECT	
RS402L	♦DII	365 - 39
	♦RECT	
RS402LF	♦RECT	365 - 40
RS402LG	♦DII	365 - 41
	♦RECT	
RS403	♦DII	365 - 56
	RECT	
RS403F	♦RECT	365 - 57
RS403G	♦DII	365 - 58
	♦RECT	
RS403L	♦DII	365 - 59
	♦RECT	
RS403LF	♦RECT	365 - 60
RS403LG	♦DII	365 - 61
	♦RECT	
RS404	♦DII	365 - 78
	RECT	
RS404F	♦RECT	365 - 79
RS404G	♦DII	365 - 80
	♦RECT	
RS404L	♦DII	365 - 81
	♦RECT	
RS404LF	♦RECT	365 - 82
RS404LG	♦DII	365 - 83
	♦RECT	

TYPE No.	MFRS	Pg&Line
RS405	♦DII	365 -100
	RECT	
RS405F	♦RECT	365 -101
RS405G	♦DII	365 -102
	♦RECT	
RS405L	♦DII	365 -103
	♦RECT	
RS405LF	♦RECT	365 -104
RS405LG	♦DII	365 -105
	♦RECT	
RS406	♦DII	365 -118
	RECT	
RS406F	♦RECT	365 -119
RS406G	♦DII	365 -120
	♦RECT	
RS406L	♦DII	365 -121
	♦RECT	
RS406LF	♦RECT	365 -122
RS406LG	♦DII	365 -123
	♦RECT	
RS407	♦DII	365 -131
	RECT	
RS407F	♦RECT	365 -132
RS407G	♦DII	365 -133
	♦RECT	
RS407L	♦DII	365 -134
	♦RECT	
RS407LF	♦RECT	365 -135
RS407LG	♦DII	365 -136
	♦RECT	
RS501	♦DII	365 -161
RS502	♦DII	365 -169
RS503	♦DII	365 -182
RS504	♦DII	365 -195
RS505	♦DII	365 -205
RS506	♦DII	366 - 10
RS507	♦DII	366 - 15
RS601	♦DII	366 - 38
RS602	♦DII	366 - 62
RS603	♦DII	366 - 87
RS604	♦DII	366 -116
RS605	♦DII	366 -144
RS606	♦DII	366 -171
RS607	♦DII	366 -191
RTD08	♦EDI	251 - 47
RTD10	♦EDI	251 - 52
RTD12	♦EDI	251 - 57
RTD14	♦EDI	251 - 61
RTD16	♦EDI	251 - 64
RTD18	♦EDI	251 - 67
RTD20	♦EDI	251 - 71
RTD25	♦EDI	251 - 75
RTD30	♦EDI	251 - 77
RTD40	♦EDI	251 - 81
RTD50	♦EDI	251 - 82
RTF10	♦THEF	258 -125
RTF20	♦THEF	259 -126
RTF40	♦THEF	241 - 42
RTF60	♦THEF	260 -217
RTF80	♦THEF	294 -144
RU1	♦SAKJ	275 -179
RU1A	♦SAKJ	275 -189
RU1B	♦SAKJ	275 -194
RU1C	♦SAKJ	401 - 53
RU2	♦SAKJ	281 -193
RU2B	SAKJ	282 - 58
RVP5	♦EDI	240 -190
RVP6	♦EDI	240 -194
RVP7	♦EDI	240 -196
RVP8	♦EDI	240 -202
RVP9	♦EDI	240 -205
RVP10	♦EDI	240 -211
RVP15	♦EDI	240 -219
RVP20	♦EDI	241 - 4
RVP25	♦EDI	241 - 9
RVP30	♦EDI	241 - 14
RVP35	♦EDI	241 - 19
RVP40	♦EDI	241 - 25
RVP45	♦EDI	241 - 27
RVP50	♦EDI	241 - 29
RW02M	GIC	361 -186
RW04M	GIC	362 - 21
RW005M	♦GIC	361 -131
RW06M	♦GIC	362 - 57
RW08M	♦GIC	362 - 83
RW10M	♦GIC	362 -108
S0M	♦SET	256 - 63
S01	MEHK	362 -200
S1-050	♦SSX	280 - 4
S1-050-200	♦SSX	257 -176
S1-050-50	♦SSX	257 -126
S1-100-50	♦SSX	258 - 33
S1-200-50	♦SSX	259 - 21
S1-400-50	♦SSX	259 -216
S1-600-50	♦SSX	260 -139
S1-800-50	♦SSX	261 - 39
S1-1000-50	♦SSX	261 -102
S1-1200	♦SSX	282 -104
S1A1F	♦SCN	253 - 71
S1A2F	♦SCN	254 - 64
S1A3F	♦SCN	254 -131
S1A4F	♦SCN	254 -192
S1A05F	♦SCN	252 -104
S1A5F	♦SCN	255 - 47
S1A6F	♦SCN	255 -102
S1A8F	♦SCN	255 -193
S1A10F	♦SCN	256 - 43
S1A12F	♦SCN	256 - 92
S1AN21	WESB	297 -124
S1GN41	WESB	301 -122
S1GN72	WESB	304 - 49
S1KW8C1	♦SET	426 -102
S1KW8C1D	♦SET	426 -122
S1KW8C1N	♦SET	426 -123

TYPE No.	MFRS	Pg&Line
S1KW8C1P	♦SET	426 -124
S1KW16C2	♦SET	429 -217
S1KW16C2D	♦SET	430 - 1
S1KW16C2N	♦SET	430 - 2
S1KW16C2P	♦SET	430 - 3
S1KW24C-4	SET	431 - 68
S1KW24C3	♦SET	431 - 69
S1KW24C3D	♦SET	431 - 71
S1KW24C3N	♦SET	431 - 72
S1KW24C3P	♦SET	431 - 73
S1KW32C4	♦SET	432 -109
S1KW32C4D	♦SET	432 -110
S1KW32C4N	♦SET	432 -111
S1KW32C4P	♦SET	432 -112
S1KW32KA2	♦SET	432 -113
S1KW36C-6	♦SET	432 -151
S1KW40C5	♦SET	432 -194
S1KW48C6D	♦SET	433 - 35
S1KW48C6N	♦SET	433 - 36
S1KW48C6P	♦SET	433 - 37
S1KW48KA3	♦SET	433 - 38
S1KW64KA4	♦SET	433 - 86
S1KW96KA6	♦SET	433 - 87
S1N4449	MSC	246 -133
S1N4449-1	MSC	246 -134
S1R20	♦SHEJ	232 - 37
S1R20Z	♦SHEJ	232 - 63
S1R40Z	♦SHEJ	232 - 64
S1R60	♦SHEJ	232 - 38
S1R80	♦SHEJ	232 - 39
S1R100	♦SHEJ	232 - 40
S1R150	♦SHEJ	232 - 41
S1RBA10	♦SHEJ	232 - 68
S1RBA20	SHEJ	232 - 69
S1RBA20Z	♦SHEJ	232 - 70
S1RBA40	♦SHEJ	232 - 71
S1RBA40Z	♦SHEJ	232 - 72
S1RBA60	♦SHEJ	232 - 73
S1V20	SHEJ	232 - 74
S1V40	SHEJ	232 - 75
S1VB10	SHEJ	232 - 65
S1VB20	SHEJ	232 - 66
S1VB40	SHEJ	277 -139
S1WB10	SHEJ	360 - 42
S1WB20	SHEJ	360 - 43
S1WB40	SHEJ	360 - 44
S1YB10	SHEJ	360 - 30
S1YB20	SHEJ	360 - 31
S1YB40	SHEJ	360 - 32
S1YB60	SHEJ	360 - 33
S1.5-050	♦SSX	283 - 94
S1.5-100	♦SSX	283 -147
S1.5-1000	♦SSX	285 - 88
S1.5-1200	♦SSX	285 - 89
S1.5-200	♦SSX	283 -212
S1.5-400	♦SSX	284 - 99
S1.5-600	♦SSX	284 -201
S1.5-800	♦SSX	285 - 60
S02#B	MEHK	363 - 32
S2AN21	WESB	297 -147
S2F	♦SET	254 - 65
S2GN41	WESB	301 -152
S2GN72	WESB	304 - 84
S2HB10	SHEJ	290 - 30
S2HB20	SHEJ	290 - 42
S2HB20Z	♦SHEJ	291 -200
S2HB40	SHEJ	290 - 56
S2HB40Z	♦SHEJ	292 - 47
S2HVM2.5F	♦SET	256 -162
S2HVM5	♦SET	423 -217
S2HVM5F	♦SET	256 -217
S2HVM7.5F	♦SET	257 - 28
S2HVM10	♦SET	427 -176
S2HVM15	♦SET	429 -136
S2K20	♦SHEJ	250 -150
S2KW3C-1	SET	419 -168
S2KW4C1	♦SET	422 - 28
S2KW4C1D	♦SET	422 - 45
S2KW4C1N	♦SET	422 - 46
S2KW4C1P	♦SET	422 - 47
S2KW8C2	♦SET	426 -128
S2KW8C2D	♦SET	426 -125
S2KW8C2N	♦SET	426 -126
S2KW8C2P	♦SET	426 -127
S2KW8KA1	♦SET	426 -129
S2KW12C3	♦SET	428 -152
S2KW12C3D	♦SET	428 -149
S2KW12C3N	♦SET	428 -150
S2KW12C3P	♦SET	428 -151
S2KW16C4	♦SET	430 - 7
S2KW16C4D	♦SET	430 - 4
S2KW16C4N	♦SET	430 - 5
S2KW16C4P	♦SET	430 - 6
S2KW16KA2	♦SET	430 - 8
S2KW20C5	♦SET	430 -218
S2KW20C5D	♦SET	430 -215
S2KW20C5N	♦SET	430 -216
S2KW20C5P	♦SET	430 -217
S2KW24C6	♦SET	431 - 77
S2KW24C6D	♦SET	431 - 74
S2KW24C6N	♦SET	431 - 75
S2KW24C6P	♦SET	431 - 76
S2KW24KA3	♦SET	431 - 78
S2KW32KA4	♦SET	432 -114
S2KW40KA5	♦SET	432 -210
S2KW48KA6	♦SET	433 - 39
S2M	♦SET	294 - 34
S2V10	SHEJ	285 -172
S2V20	SHEJ	274 - 16
S2V40	SHEJ	274 - 27
S2VB10	SHEJ	362 -206
S2VB20	SHEJ	363 - 38
S2VB40	SHEJ	363 - 86
S3-050	♦SSX	287 -185

TYPE No.	MFRS	Pg&Line
S3-050-200	♦SSX	257 -177
S3-050-50	♦SSX	257 -127
S3-100	♦SSX	288 - 23
S3-100-200	♦SSX	258 - 99
S3-100-50	♦SSX	258 - 34
S3-200	♦SSX	288 -102
S3-200-200	♦SSX	259 - 97
S3-200-50	♦SSX	259 - 22
S3-400	♦SSX	288 -202
S3-400-200	♦SSX	260 - 64
S3-400-50	♦SSX	260 - 1
S3-600	♦SSX	289 - 68
S3-600-200	♦SSX	260 -196
S3-600-50	♦SSX	260 -140
S3-800	♦SSX	289 -138
S3-800-200	♦SSX	261 - 57
S3-800-50	♦SSX	261 - 40
S3-1000	♦SSX	289 -174
S3-1000-200	♦SSX	261 -118
S3-1000-50	♦SSX	261 -103
S3-1200	♦SSX	289 -175
S3A1	♦SCN	288 - 24
S3A1F	♦SCN	253 - 72
S3A2	♦SCN	288 -103
S3A2F	♦SCN	254 - 66
S3A3	♦SCN	288 -155
S3A3F	♦SCN	254 -132
S3A4	♦SCN	288 -203
S3A4F	♦SCN	254 -193
S3A05	♦SCN	287 -186
S3A05F	♦SCN	252 -105
S3A5	♦SCN	289 - 23
S3A5F	♦SCN	255 - 52
S3A6	♦SCN	289 - 69
S3A6F	♦SCN	255 -119
S3A7	♦SCN	289 - 96
S3A8	♦SCN	289 -139
S3A8F	♦SCN	256 - 7
S3A9	♦SCN	289 -165
S3A10	♦SCN	402 -173
S3A10F	♦SCN	256 - 44
S3A12	♦SCN	406 -115
S3A12F	♦SCN	256 - 93
S3A15	♦SCN	411 -101
S3A025	♦SCN	290 -100
S3AN21	WESB	297 -159
S3BR2	♦SET	288 -126
S3BR2F	♦SET	274 - 17
S3BR4	♦SET	372 - 86
S3BR4F	♦SET	372 - 80
S3BR10	♦SET	372 - 82
S3BR15FF	♦SET	372 - 79
S3BR20	♦SET	372 - 75
S3BR25F	♦SET	372 - 73
S3BR30	♦SET	419 -108
S3GN41	WESB	301 -170
S3GN72	WESB	304 - 98
S3HVM2.5F	♦SET	256 -154
S3HVM5	♦SET	424 - 7
S3HVM5F	♦SET	256 -209
S3HVM10	♦SET	427 -192
S3KD20	SHEJ	271 -121
S3S3M	SHEJ	262 - 21
S3S4M	SHEJ	262 - 22
S3V10	SHEJ	287 -136
S3V20	SHEJ	287 -139
S3V40	SHEJ	287 -141
S3V60	SHEJ	289 -200
S3VC10	SHEJ	287 - 7
S3VC20	SHEJ	364 - 28
S3WB10	SHEJ	362 -197
S3WB20	SHEJ	364 - 14
S3WB40	SHEJ	364 - 15
S3WB60	SHEJ	237 - 64
S3WB60Z	SHEJ	237 - 65
S3WB60Z-S	SHEJ	237 - 66
S04#B	MEHK	363 - 80
S4AN21	WESB	297 -183
S4F	♦SET	254 -173
S4GN41	WESB	301 -197
S4GN72	WESB	304 -129
S4KW2C1	♦SET	415 -127
S4KW2C1N	♦SET	415 -126
S4KW4C2	♦SET	422 - 52
S4KW4C2D	♦SET	422 - 49
S4KW4C2N	♦SET	422 - 50
S4KW4C2P	♦SET	422 - 51
S4KW4KA1	♦SET	422 - 53
S4KW6C3	♦SET	425 - 32
S4KW6C3D	♦SET	425 - 29
S4KW6C3N	♦SET	425 - 30
S4KW6C3P	♦SET	425 - 31
S4KW8C4	♦SET	426 -134
S4KW8C4D	♦SET	426 -130
S4KW8C4N	♦SET	426 -131
S4KW8C4P	♦SET	426 -132
S4KW8KA2	♦SET	426 -135
S4KW10C5	♦SET	427 -216
S4KW10C5D	♦SET	427 -214
S4KW10C5N	♦SET	426 -133
S4KW10C5P	♦SET	427 -215
S4KW12C6	♦SET	428 -156
S4KW12C6D	♦SET	428 -153
S4KW12C6N	♦SET	428 -154
S4KW12C6P	♦SET	428 -155
S4KW12KA3	♦SET	428 -157
S4KW16KA4	♦SET	430 - 9
S4KW20KA5	♦SET	430 -219
S4KW24KA6	♦SET	431 - 79
S4M	♦SET	294 - 82
S4VB10	SHEJ	364 - 53
S4VB20	SHEJ	364 - 54
S4VB40	SHEJ	364 - 56
S4VB60	SHEJ	290 - 69

TYPE No.	MFRS	Pg&Line
S005	MEHK	362 -166
S5A1	MAL	290 -140
	♦SCN	
S5A1F	♦SCN	253 - 73
S5A2	MAL	290 -176
	♦SCN	
S5A2F	♦SCN	254 - 67
S5A3	MAL	290 -204
	♦SCN	
S5A3F	♦SCN	254 -133
S5A4	MAL	291 - 9
	♦SCN	
S5A4F	♦SCN	254 -194
S5A05	MAL	290 -115
	♦SCN	
S5A05F	♦SCN	252 -106
S5A5	♦SCN	291 - 33
S5A5F	♦SCN	255 - 53
S5A6	MAL	291 - 48
	♦SCN	
S5A6F	♦SCN	255 -120
S5A8	♦SCN	291 - 71
S5A8F	♦SCN	255 -194
S5A10	MAL	402 -207
	♦SCN	
S5A10F	♦SCN	256 - 45
S5A12	♦SCN	406 -133
S5A12F	♦SCN	256 - 94
S5A15	♦SCN	411 -111
S5AN21	WESB	297 -192
S5GN41	WESB	301 -208
S5GN72	WESB	304 -141
S5KC20	SHEJ	250 -151
S5KP5.0	♦SCN	352 - 43
S5KP5.0A	♦SCN	352 - 44
S5KP6.0	♦SCN	352 - 45
S5KP6.0A	♦SCN	352 - 46
S5KP6.5	♦SCN	352 - 47
S5KP6.5A	♦SCN	352 - 48
S5KP7.0	♦SCN	352 - 49
S5KP7.0A	♦SCN	352 - 50
S5KP7.5	♦SCN	352 - 51
S5KP7.5A	♦SCN	352 - 52
S5KP8.0	♦SCN	352 - 53
S5KP8.0A	♦SCN	352 - 54
S5KP8.5	♦SCN	352 - 55
S5KP8.5A	♦SCN	352 - 56
S5KP9.0	♦SCN	352 - 57
S5KP9.0A	♦SCN	352 - 58
S5KP10	♦SCN	352 - 59
S5KP10A	♦SCN	352 - 60
S5KP11	♦SCN	352 - 61
S5KP11A	♦SCN	352 - 62
S5KP12	♦SCN	352 - 63
S5KP12A	♦SCN	352 - 64
S5KP13	♦SCN	352 - 65
S5KP13A	♦SCN	352 - 66
S5KP14	♦SCN	352 - 67
S5KP14A	♦SCN	352 - 68
S5KP15	♦SCN	352 - 69
S5KP15A	♦SCN	352 - 70
S5KP16	♦SCN	352 - 71
S5KP16A	♦SCN	352 - 72
S5KP17	♦SCN	352 - 73
S5KP17A	♦SCN	352 - 74
S5KP18	♦SCN	352 - 75
S5KP18A	♦SCN	352 - 76
S5KP20	♦SCN	352 - 77
S5KP20A	♦SCN	352 - 78
S5KP22	♦SCN	352 - 79
S5KP22A	♦SCN	352 - 80
S5KP24	♦SCN	352 - 81
S5KP24A	♦SCN	352 - 82
S5KP26	♦SCN	352 - 83
S5KP26A	♦SCN	352 - 84
S5KP28	♦SCN	352 - 85
S5KP28A	♦SCN	352 - 86
S5KP30	♦SCN	352 - 87
S5KP30A	♦SCN	352 - 88
S5KP33	♦SCN	352 - 89
S5KP33A	♦SCN	352 - 90
S5KP36	♦SCN	352 - 91
S5KP36A	♦SCN	352 - 92
S5KP40	♦SCN	352 - 93
S5KP40A	♦SCN	352 - 94
S5KP43	♦SCN	352 - 95
S5KP43A	♦SCN	352 - 96
S5KP45	♦SCN	352 - 97
S5KP45A	♦SCN	352 - 98
S5KP48	♦SCN	352 - 99
S5KP48A	♦SCN	352 -100
S5KP51	♦SCN	352 -101
S5KP51A	♦SCN	352 -102
S5KP54	♦SCN	352 -103
S5KP54A	♦SCN	352 -104
S5KP58	♦SCN	352 -105
S5KP58A	♦SCN	352 -106
S5KP60	♦SCN	352 -107
S5KP60A	♦SCN	352 -108
S5KP64	♦SCN	352 -109
S5KP64A	♦SCN	352 -110
S5KP70	♦SCN	353 - 1
S5KP70A	♦SCN	353 - 2
S5KP75	♦SCN	353 - 3
S5KP75A	♦SCN	353 - 4
S5KP78	♦SCN	353 - 5
S5KP78A	♦SCN	353 - 6
S5KP85	♦SCN	353 - 7
S5KP85A	♦SCN	353 - 8
S5KP90	♦SCN	353 - 9
S5KP90A	♦SCN	353 - 10
S5KP100	♦SCN	353 - 11
S5KP100A	♦SCN	353 - 12
S5KP110	SCN	353 - 13

Δ-Registered with JEDEC by this manufacturer

♦-Mfr's data sheet available in microfilm service

1. TYPE No. CROSS INDEX

IN TYPE NUMBER SEQUENCE

TYPE No.	MFRS	Pg&Line
S5KP110A	SCN	353 - 14
S5S3	SHEJ	263 -158
S5S4	SHEJ	263 -160
S5VB10	SHEJ	365 - 2
S5VB20	SHEJ	365 - 4
S5VB40	SHEJ	365 - 5
S5VB60	SHEJ	292 -106
S006AADF	♦COO	263 - 23
S06	MEHK	363 -127
S6A1	♦SCN	291 -153
S6A2	♦SCN	291 -204
S6A3	♦SCN	292 - 21
S6A4	♦SCN	292 - 52
S6A05	♦SCN	291 -110
S6A5	♦SCN	292 - 85
S6A6	♦SCN	292 -110
S6A8	♦SCN	292 -161
S6A10	♦SCN	403 - 8
	♦SEN	
S6A10FR	♦SEN	365 -170
S6A20	♦SEN	366 - 88
S6A20FR	♦SEN	365 -183
S6A40	♦SEN	366 -117
S6A40FR	♦SEN	365 -196
S6A60	♦SEN	366 -145
S6A60FR	♦SEN	366 - 1
S6A80	♦SEN	366 -172
S6A80FR	♦SEN	365 - 6
S6A100	♦SEN	366 -192
S6A100FR	♦SEN	365 - 7
S6A305FR	SEN	372 -102
S6A305HE	♦SEN	372 - 91
S6A310FR	SEN	372 -104
S6A310HE	♦SEN	372 - 92
S6A315HE	♦SEN	372 - 94
S6A320	♦SEN	372 -108
S6A320FR	SEN	372 -105
S6A340	♦SEN	372 -109
S6A340FR	SEN	372 -106
S6A360	♦SEN	372 -101
S6A360FR	SEN	372 -107
S6A380	♦SEN	372 -110
S6A3100	♦SEN	372 -111
S6AN21	WESB	297 -210
S6GN41	WESB	302 - 14
S6GN72	WESB	304 -168
S6HVM2.5	♦SET	417 -182
S6HVM5	♦SET	424 - 9
S6K20	SHEJ	251 -115
S6M	♦SET	255 -131
S08	MEHK	286 -194
S8-01	ORIJ	293 - 76
S8-01FR	ORIJ	258 -138
S8-02	ORIJ	293 - 90
S8-02FR	ORIJ	259 -135
S8-04	ORIJ	293 -109
S8-04FR	ORIJ	260 - 94
S8-06	ORIJ	293 -119
S8-06FR	ORIJ	261 - 12
S8-08	ORIJ	293 -127
S8-08FR	ORIJ	261 - 91
S8-10	ORIJ	403 - 39
S8M	♦SET	255 -210
S9HVM2.5	♦SET	417 -183
S10	MEHK	363 -200
S10A05FR	♦SEN	367 -111
S10A05HE	♦SEN	369 -118
S10A10	♦SEN	368 -119
S10A10FR	♦SEN	367 -142
S10A10HE	♦SEN	369 -119
S10A15HE	♦SEN	369 -120
S10A20	♦SEN	368 -135
S10A20FR	♦SEN	367 -181
S10A40	♦SEN	368 -155
S10A40FR	♦SEN	368 - 1
S10A60	♦SEN	368 -170
S10A60FR	♦SEN	368 - 39
S10A80	♦SEN	368 -183
S10A100	♦SEN	368 -189
S10A305FR	SEN	372 -126
S10A310FR	SEN	372 -127
S10A320	SEN	372 -138
S10A320FR	SEN	372 -129
S10A340	SEN	372 -139
S10A340FR	SEN	372 -130
S10A360	SEN	372 -140
S10A360FR	SEN	372 -131
S10A380	SEN	372 -141
S10A3100	SEN	372 -142
S10SC3	SHEJ	263 -159
S10SC3M	SHEJ	272 -133
S10SC4	SHEJ	263 -161
S10SC4M	SHEJ	272 -135
S10VB10	SHEJ	294 - 3
S10VB20	SHEJ	274 - 18
S10VB40	SHEJ	274 - 28
S10VB60	SHEJ	294 -127
S11B	♦HITJ	444 - 63
S11C	♦HITJ	444 - 64
S11D	♦HITJ	444 - 65
S012AADF	♦COO	263 - 79
S12A10FR	♦SEN	368 -120
S12A20	♦SEN	368 -136
S12A20FR	♦SEN	368 -137
S12A40	♦SEN	368 -156
S12A40FR	♦SEN	368 -157
S12A60	♦SEN	368 -171
S12A60FR	♦SEN	368 -172
S12A80	♦SEN	368 -184
S12A100	♦SEN	368 -190
S12B	♦HITJ	444 - 66
S12C	♦HITJ	444 - 67
S12D	♦HITJ	444 - 68
S12KC20	SHEJ	271 -122

TYPE No.	MFRS	Pg&Line
S15A310	♦SEN	372 -158
S15A310FR	♦SEN	372 -159
S15A320	♦SEN	372 -161
S15A320FR	♦SEN	372 -162
S15A340	♦SEN	372 -168
S15A340FR	♦SEN	372 -169
S15A360	♦SEN	372 -177
S15A360FR	♦SEN	372 -178
S15A380	♦SEN	372 -182
S15A3100	♦SEN	372 -184
S15B	♦HITJ	444 - 69
S15C	SAKJ	240 -114
S15C#B	♦HITJ	444 - 70
S15D	♦HITJ	444 - 71
S15F	♦SET	249 -169
S15H	♦SAKJ	239 -207
S15S3	SHEJ	262 -133
S15S4	SHEJ	262 -136
S15SC3M	SHEJ	272 -137
S15SC4M	SHEJ	272 -138
S15VB10	SHEJ	365 -141
S15VB20	SHEJ	365 -143
S15VB40	SHEJ	365 -144
S15VB60	SHEJ	296 -154
S016AADF	♦COO	263 - 89
S16-050	♦SSX	296 -183
S16-050-200	♦SSX	262 -211
S16-050-50	♦SSX	262 -210
S16-100	♦SSX	296 -192
S16-100-200	♦SSX	262 -215
S16-100-50	♦SSX	262 -214
S16-200	♦SSX	296 -210
S16-200-200	♦SSX	263 - 1
S16-200-50	♦SSX	262 -220
S16-400	♦SSX	297 - 8
S16-400-200	♦SSX	263 - 3
S16-400-50	♦SSX	263 - 2
S16-600	♦SSX	297 - 22
S16-600-200	♦SSX	263 - 4
S16-800	♦SSX	297 - 37
S16-800-200	♦SSX	263 - 6
S16-800-50	♦SSX	263 - 5
S16-1000	♦SSX	297 - 49
S16-1000-200	♦SSX	263 - 8
S16-1000-50	♦SSX	263 - 7
S16-1200	♦SSX	297 - 50
S16B	♦HITJ	277 -138
		446 - 48
S16D	♦HITJ	444 - 72
S19C	♦HITJ	294 - 69
S19D	♦HITJ	294 - 99
S19E	♦HITJ	294 -116
S19G	♦HITJ	294 -150
S19J	♦HITJ	403 - 51
S19L	♦HITJ	406 -170
S20-01	ORIJ	297 -112
S20-01FR	ORIJ	258 -139
S20-02	ORIJ	297 -137
S20-02FR	ORIJ	259 -136
S20-04	ORIJ	297 -163
S20-06	ORIJ	297 -197
S20-06FR	ORIJ	261 - 13
S20-08	ORIJ	297 -215
S20-08FR	ORIJ	261 - 92
S20-10	ORIJ	403 -110
S20C	♦HITJ	294 - 70
S20D	♦HITJ	294 -100
S20E	♦HITJ	294 -117
S20F	♦SET	415 - 71
S20G	♦HITJ	294 -151
S20J	♦HITJ	403 - 52
S20L	♦HITJ	406 -171
S20N500JA	♦AEIL	309 - 7
S20N600JA	♦AEIL	309 - 9
S20N700JA	♦AEIL	309 - 11
S20N800JA	♦AEIL	309 - 14
S20N900JA	♦AEIL	309 - 16
S20N1000JA	♦AEIL	309 - 18
S20N1100JA	♦AEIL	404 -130
S20N1200JA	♦AEIL	405 -122
S20N1300JA	♦AEIL	408 - 4
S20N1400JA	♦AEIL	409 - 11
S20N1500JA	♦AEIL	410 - 54
S20N1600JA	♦AEIL	411 -176
S20N1700JA	♦AEIL	413 - 25
S20N1800JA	♦AEIL	413 -153
S20N1900JA	♦AEIL	414 - 30
S20N2000JA	♦AEIL	414 -140
S20P500JA	♦AEIL	309 - 8
S20P600JA	♦AEIL	309 - 10
S20P700JA	♦AEIL	309 - 12
S20P800JA	♦AEIL	309 - 15
S20P900JA	♦AEIL	309 - 17
S20P1000JA	♦AEIL	309 - 19
S20P1100JA	♦AEIL	404 -131
S20P1200JA	♦AEIL	405 -123
S20P1300JA	♦AEIL	408 - 5
S20P1400JA	♦AEIL	409 - 12
S20P1500JA	♦AEIL	410 - 55
S20P1600JA	♦AEIL	411 -177
S20P1700JA	♦AEIL	413 - 26
S20P1800JA	♦AEIL	413 -154
S20P1900JA	♦AEIL	414 - 31
S20P2000JA	♦AEIL	414 -141
S025AADF	COO	263 -133
S25A1	♦SCN	298 -154
S25A2	♦SCN	298 -214
S25A3	♦SCN	299 - 21
S25A4	♦SCN	299 - 67
S25A05	♦SCN	298 -120
S25A05HE	♦SEN	292 -196
S25A5	♦SCN	299 - 94
S25A6	♦SCN	299 -128
S25A8	♦SCN	299 -168

TYPE No.	MFRS	Pg&Line
S25A10	♦SCN	403 -141
	♦SEN	
S25A10FR	♦SEN	369 -151
S25A10HE	♦SEN	292 -197
S25A15HE	♦SEN	292 -198
S25A20	♦SEN	370 - 20
S25A20FR	♦SEN	369 -156
S25A40	♦SEN	370 - 57
S25A40FR	♦SEN	369 -160
S25A60	♦SEN	370 - 92
S25A60FR	♦SEN	369 -164
S25A80	♦SEN	370 -114
S25A100	♦SEN	370 -131
S25A305HE	♦SEN	293 - 58
S25A310	♦SEN	373 - 5
S25A310FR	♦SEN	372 -199
S25A310HE	♦SEN	293 - 59
S25A315HE	♦SEN	293 - 60
S25A320	♦SEN	373 - 10
S25A320FR	♦SEN	372 -202
S25A340	♦SEN	372 -203
S25A340FR	♦SEN	372 -173
S25A360	♦SEN	373 - 24
S25A360FR	♦SEN	372 -207
S25A380	♦SEN	373 - 28
S25A3100	♦SEN	373 - 31
S25F	♦SET	249 -196
S25VB10	SHEJ	366 - 48
S25VB20	SHEJ	366 - 74
S25VB40	SHEJ	366 -103
S25VB60	SHEJ	299 - 98
S30A05HE	♦SEN	294 -158
S30A10	♦SEN	293 -176
S30A10FR	♦SEN	293 -136
S30A10HE	♦SEN	294 -159
S30A15HE	♦SEN	294 -160
S30A20	♦SEN	293 -178
S30A20FR	♦SEN	293 -143
S30A40	♦SEN	293 -182
S30A40FR	♦SEN	293 -152
S30A60	♦SEN	293 -186
S30A60FR	♦SEN	293 -160
S30A80	♦SEN	293 -189
S30A100	♦SEN	403 - 41
S30N500JA4	♦AEIL	311 - 93
S30N600JA4	♦AEIL	310 -128
S30N700JA4	♦AEIL	310 -129
S30N800JA4	♦AEIL	310 -130
S30N900JA4	♦AEIL	310 -131
S30N1000JA4	♦AEIL	310 -135
S30N1100JA4	♦AEIL	404 -170
S30N1200JA4	♦AEIL	405 -136
S30N1300JA4	♦AEIL	408 - 47
S30N1400JA4	♦AEIL	409 - 19
S30N1500JA4	♦AEIL	410 - 82
S30N1600JA4	♦AEIL	411 -185
S30N1700JA4	♦AEIL	413 - 42
S30N1800JA4	♦AEIL	413 -157
S30N1900JA4	♦AEIL	414 - 50
S30N2000JA4	♦AEIL	414 -142
S30S3A	♦SHEJ	263 - 35
S30S4A	SHEJ	263 - 39
S30SC3	SHEJ	264 - 69
S30SC3M	SHEJ	272 -139
S30SC4	SHEJ	264 - 70
S30SC4M	SHEJ	272 -140
S035AADF	COO	263 -163
S35A305HE	♦SEN	295 -190
S35A310	♦SEN	294 -163
S35A310FR	♦SEN	294 - 10
S35A310HE	♦SEN	295 -193
S35A315HE	♦SEN	295 -196
S35A320	♦SEN	294 -164
S35A320FR	♦SEN	294 - 40
S35A340	♦SEN	294 -165
S35A340FR	♦SEN	294 - 89
S35A360	♦SEN	294 -166
S35A360FR	♦SEN	294 -126
S35A380	♦SEN	294 -167
S35A3100	♦SEN	403 - 54
S40-050	♦SSX	301 - 95
S40-100	♦SSX	301 -109
S40-200	♦SSX	301 -131
S40-400	♦SSX	301 -177
S40-600	♦SSX	301 -211
S40-800	♦SSX	302 - 21
S40-1000	♦SSX	302 - 45
S40-1200	♦SSX	302 - 46
S40A1	♦SCN	301 -116
S40A2	♦SCN	301 -140
S40A3	♦SCN	301 -164
S40A4	♦SCN	301 -186
S40A05	♦SCN	301 - 96
S40A5	♦SCN	301 -202
S40A6	♦SCN	302 - 2
S40A8	♦SCN	302 - 34
S40A10	♦SCN	403 -184
S045AADF	♦COO	257 -203
S50A05FR	♦SEN	295 -191
S50A10	♦SEN	295 -194
S50A10FR	♦SEN	295 -195
S50A20	♦SEN	295 -197
S50A20FR	♦SEN	295 -198
S50A40	♦SEN	295 -200
S50A40FR	♦SEN	295 -201
S50A60	♦SEN	295 -202
S50A60FR	♦SEN	295 -203
S50A80	♦SEN	295 -204
S50A100	♦SEN	403 - 77
S50A305FR	♦SEN	372 -144
S50A310	♦SEN	372 -145
S50A310FR	♦SEN	372 -146
S50A320	♦SEN	372 -147
S50A320FR	♦SEN	372 -148

TYPE No.	MFRS	Pg&Line
S50A340	♦SEN	372 -149
S50A340FR	♦SEN	372 -150
S50A360	♦SEN	372 -151
S50A360FR	♦SEN	372 -152
S50A380	♦SEN	372 -153
S50A3100	♦SEN	372 -154
S51A	♦HITJ	263 - 64
S51B	♦HITJ	263 - 67
S51C	♦HITJ	263 - 70
S52A	♦HITJ	263 - 65
S52B	♦HITJ	263 - 68
S52C	♦HITJ	263 - 71
S53A	♦HITJ	294 -197
S53B	♦HITJ	295 - 7
S53T	♦HITJ	294 -201
S54A	♦HITJ	294 -198
S54B	♦HITJ	295 - 8
S54T	♦HITJ	294 -202
S055AADF	♦COO	263 -206
S57	SCN	289 -105
S58	SCN	289 -152
S59	SCN	289 -172
S060HHOF	COO	375 - 69
S60	SCN	402 -185
S60S3	SHEJ	263 -119
S60S4	SHEJ	263 -121
S61	SCN	401 -129
S62	SCN	401 - 87
S63	SCN	277 - 59
S70-050	♦SSX	304 - 15
S70-100	♦SSX	304 - 29
S70-200	♦SSX	304 - 58
S70-400	♦SSX	304 -103
S70-600	♦SSX	304 -142
S70-800	♦SSX	304 -176
S70-1000	♦SSX	304 -202
S70-1200	♦SSX	304 -203
S72	SCN	279 -197
S73	SCN	276 - 51
S76	SCN	277 -204
S77	SCN	277 - 84
S78	SCN	285 - 90
S79	SCN	276 - 42
S81	SCN	278 - 32
S82	SCN	278 - 80
S83	SCN	278 -115
S84	SCN	278 -160
S85	SCN	278 -189
S86	SCN	279 - 14
S91	SCN	274 -201
S91A	SCN	278 - 14
S91B	SCN	285 - 98
S92	SCN	274 -205
S92A	SCN	278 - 52
S93	SCN	274 -210
S93A	SCN	278 - 99
S95	SCN	277 - 73
S100	SCN	277 - 15
S100-01	ORIJ	305 -191
S100-01FR	ORIJ	258 -144
S100-02	ORIJ	305 -206
S100-02FR	ORIJ	259 -147
S100-04	ORIJ	306 - 31
S100-04FR	ORIJ	260 -103
S100-06	ORIJ	306 - 88
S100-08	ORIJ	306 -133
S100-10	ORIJ	404 - 46
S101	SCN	276 -192
S102	SCN	276 - 96
S103	SCN	275 -111
S104	SCN	276 - 95
S105	SCN	277 - 16
S106	SCN	276 - 22
S107	SCN	275 -125
S108	SCN	277 - 17
S180D	♦ALGG	232 - 76
S181D	♦ALGG	232 - 77
S200	SCN	274 -118
S200-02	ORIJ	308 -159
S200-02FR	ORIJ	259 -148
S200-04	ORIJ	308 -178
S200-04FR	ORIJ	260 -104
S200-06	ORIJ	308 -197
S200-08	ORIJ	308 -215
S200-10	ORIJ	404 -122
S201	SCN	274 -128
S202	SCN	274 -139
S203	SCN	274 -150
S204	SCN	274 -158
S205	SCN	274 -165
S206	SCN	274 -172
S208	SCN	274 -181
S210	SCN	401 - 30
S217	SCN	275 -168
S218	SCN	274 -173
S219	SCN	275 -177
S220	SCN	276 -143
S221	SCN	276 -166
S353	♦SIEG	315 - 45
S380D	♦ALGG	232 - 80
S381D	♦ALGG	232 - 81
S600HE	♦SEN	281 -198
S00601DF	♦COO	263 - 25
S00602DF	♦COO	263 - 27
S00603DF	♦COO	263 - 29
S00604DF	♦COO	263 - 31
S800HE	♦SEN	282 - 63
S870R	SAKJ	238 -186
S870S	SAKJ	238 -187
S904SXU10	AEIL	404 -212
S904SXU11	AEIL	405 -153
S904SXU12	AEIL	408 - 96
S904SXU13	AEIL	409 - 25
S904SXU14	AEIL	410 -130

TYPE No.	MFRS	Pg&Line
S904SXU15	AEIL	411 -203
S904SXU16	AEIL	413 - 74
S904SXU17	AEIL	413 -163
S904SXU18	AEIL	414 - 80
S904SXU19	AEIL	414 -145
S904SXU20	AEIL	415 -178
S904SXU21	AEIL	416 - 38
S904SXU22	AEIL	416 -112
S904SXU23	AEIL	416 -175
S904SXU24	AEIL	417 - 45
S904SXU25	AEIL	418 - 9
S904SXU26	AEIL	418 - 82
S904SXU27	AEIL	418 -127
S904SXU28	AEIL	418 -188
S904SXU29	AEIL	419 - 18
S951SXU01	AEIL	312 - 82
S951SXU02	AEIL	312 - 87
S951SXU03	AEIL	312 - 91
S951SXU04	AEIL	312 - 95
S951SXU05	AEIL	312 - 99
S951SXU06	AEIL	312 -103
S951SXU07	AEIL	312 -109
S951SXU08	AEIL	312 -113
S951SXU09	AEIL	312 -118
S951SXU10	AEIL	405 - 17
S951SXU11	AEIL	405 -160
S951SXU12	AEIL	408 -124
S954SXU10	AEIL	404 -217
S954SXU11	AEIL	405 -155
S954SXU12	AEIL	408 -101
S954SXU13	AEIL	409 - 26
S954SXU14	AEIL	410 -135
S954SXU15	AEIL	411 -205
S954SXU16	AEIL	413 - 79
S954SXU17	AEIL	413 -164
S954SXU18	AEIL	414 - 84
S954SXU19	AEIL	414 -146
S954SXU20	AEIL	415 -183
S954SXU21	AEIL	416 - 39
S954SXU22	AEIL	416 -116
S954SXU23	AEIL	416 -176
S954SXU24	AEIL	417 - 51
S954SXU25	AEIL	418 - 11
S954SXU26	AEIL	418 - 86
S954SXU27	AEIL	418 -128
S954SXU28	AEIL	418 -193
S954SXU29	AEIL	419 - 19
S962SXU25	AEIL	417 -212
S962SXU26	AEIL	418 - 68
S962SXU27	AEIL	418 -120
S962SXU28	AEIL	418 -180
S962SXU29	AEIL	419 - 8
S962SXU30	AEIL	419 -196
S962SXU31	AEIL	420 - 30
S962SXU32	AEIL	420 - 76
S962SXU33	AEIL	420 -115
S962SXU34	AEIL	420 -146
S962SXU35	AEIL	420 -197
S962SXU36	AEIL	421 - 31
S962SXU37	AEIL	421 - 61
S962SXU38	AEIL	421 - 89
S962SXU39	AEIL	421 -111
S962SXU40	AEIL	422 - 59
S962SXU41	AEIL	422 - 89
S962SXU42	AEIL	422 -118
S962SXU43	AEIL	422 -135
S962SXU44	AEIL	422 -161
S962SXU45	AEIL	422 -213
S962SXU46	AEIL	423 - 11
S962SXU47	AEIL	423 - 15
S962SXU48	AEIL	423 - 44
S962SXU49	AEIL	423 - 53
S962SXU50	AEIL	424 - 57
S962SXU51	AEIL	424 - 69
S962SXU52	AEIL	424 - 74
S962SXU53	AEIL	424 - 79
S962SXU54	AEIL	424 - 84
S962SXU55	AEIL	424 -107
S962SXU56	AEIL	424 -113
S1000HE	♦SEN	401 -195
S1082	♦SCN	425 - 91
S1083	♦SCN	432 -211
S1084	♦SCN	410 -117
S1101SXU01	AEIL	312 -150
S1101SXU02	AEIL	312 -155
S1101SXU03	AEIL	312 -160
S1101SXU04	AEIL	312 -165
S1101SXU05	AEIL	312 -170
S1101SXU06	AEIL	312 -175
S1101SXU07	AEIL	312 -181
S1101SXU08	AEIL	312 -185
S1101SXU09	AEIL	312 -190
S1101SXU10	AEIL	405 - 26
S1101SXU11	AEIL	405 -168
S1101SXU12	AEIL	408 -134
S1104SXU10	AEIL	405 - 11
S1104SXU11	AEIL	405 -159
S1104SXU12	AEIL	408 -122
S1104SXU13	AEIL	409 - 32
S1104SXU14	AEIL	410 -154
S1104SXU15	AEIL	411 -209
S1104SXU16	AEIL	413 -100
S1104SXU17	AEIL	413 -167
S1104SXU18	AEIL	414 - 97
S1104SXU19	AEIL	414 -149
S1104SXU20	AEIL	415 -198
S1104SXU21	AEIL	416 - 42
S1104SXU22	AEIL	416 -124
S1104SXU23	AEIL	416 -179
S1104SXU24	AEIL	417 - 58
S1104SXU25	AEIL	418 - 22
S1104SXU26	AEIL	418 - 91
S1104SXU27	AEIL	418 -133
S1104SXU28	AEIL	418 -201

Δ-Registered with JEDEC by this manufacturer

♦-Mfr's data sheet available in microfilm service

1. TYPE No. CROSS INDEX

IN TYPE NUMBER SEQUENCE

TYPE No.	MFRS	Pg&Line
S1104SXU29	AEIL	419 - 23
S1107SXU24	AEIL	417 - 42
S1107SXU25	AEIL	418 - 1
S1107SXU26	AEIL	418 - 76
S1107SXU27	AEIL	418 -122
S1107SXU28	AEIL	418 -183
S1107SXU29	AEIL	419 - 14
S1107SXU30	AEIL	419 -201
S1107SXU31	AEIL	420 - 32
S1107SXU32	AEIL	420 - 82
S1107SXU33	AEIL	420 -117
S1107SXU34	AEIL	420 -148
S1107SXU35	AEIL	420 -202
S1107SXU36	AEIL	421 - 33
S1109SXU30	AEIL	419 -200
S1109SXU31	AEIL	420 - 31
S1109SXU32	AEIL	420 - 81
S1109SXU33	AEIL	420 -116
S1109SXU34	AEIL	420 -147
S1109SXU35	AEIL	420 -199
S1109SXU36	AEIL	421 - 32
S1109SXU37	AEIL	421 - 62
S1109SXU38	AEIL	421 - 94
S1109SXU39	AEIL	421 -112
S1109SXU40	AEIL	422 - 61
S1109SXU41	AEIL	422 - 90
S1109SXU42	AEIL	422 -119
S1109SXU43	AEIL	422 -136
S1109SXU44	AEIL	422 -166
S01201DF	♦COO	263 - 81
S01202DF	♦COO	263 - 83
S01203DF	♦COO	263 - 86
S01204DF	♦COO	263 - 88
S01601DF	♦COO	263 - 90
S01602DF	♦COO	263 - 93
S01603DF	♦COO	263 - 99
S2005	COO	296 -186
S2010	COO	296 -198
S2015	COO	296 -206
S2020	COO	296 -214
S2025	COO	296 -219
S2030	COO	297 - 1
S2035	COO	297 - 5
S2040	♦COO	297 - 11
S2045	COO	297 - 16
S2050	COO	297 - 17
S2060	♦COO	297 - 25
S2070	COO	297 - 33
S2080	♦COO	297 - 40
S2090	COO	297 - 46
S2105	♦COO	298 - 13
S2110	♦COO	298 - 19
S2115	♦COO	298 - 23
S2120	♦COO	298 - 30
S2125	♦COO	298 - 32
S2130	♦COO	298 - 36
S2135	♦COO	298 - 37
S2140	♦COO	298 - 43
S2145	COO	298 - 44
S2150	♦COO	298 - 46
S2160	♦COO	298 - 51
S2170	♦COO	298 - 54
S2180	♦COO	298 - 59
S2190	COO	298 - 62
S02501DF	COO	263 -136
S02502DF	COO	263 -139
S02503DF	COO	263 -142
S02504DF	COO	263 -145
S3405	COO	302 - 54
S3410	♦COO	302 - 59
S3415	COO	302 - 61
S3420	♦COO	302 - 66
S3425	COO	302 - 69
S3430	COO	302 - 74
S3435	COO	302 - 79
S3440	♦COO	302 - 83
S3445	COO	302 - 84
S3450	COO	302 - 87
S3460	♦COO	302 - 95
S3470	COO	302 - 98
S3480	♦COO	302 -104
S3490	COO	302 -105
S03501DF	COO	263 -166
S03502DF	COO	263 -172
S03503DF	COO	263 -177
S03504DF	COO	263 -180
S3605	COO	304 - 22
S3610	♦COO	304 - 42
S3615	COO	304 - 54
S3620	♦COO	304 - 74
S3625	COO	304 - 86
S3630	COO	304 - 93
S3635	COO	304 -101
S3640	♦COO	304 -120
S3645	COO	304 -130
S3650	COO	304 -136
S3660	♦COO	304 -159
S3670	COO	304 -172
S3680	♦COO	304 -191
S3690	COO	304 -200
S3705	COO	305 - 63
S3710	♦COO	305 - 70
S3715	COO	305 - 74
S3720	♦COO	305 - 82
S3725	COO	305 - 86
S3730	COO	305 - 89
S3735	COO	305 - 92
S3740	♦COO	305 - 99
S3745	COO	305 -102
S3750	COO	305 -105
S3760	♦COO	305 -114
S3770	COO	305 -119
S3780	♦COO	305 -125
S3790	COO	305 -128
S4000HE	♦SEN	421 -208
S4205	COO	306 -206
S4205TS	COO	306 -207
S4210	♦COO	306 -208
S4210TS	COO	306 -209
S4215	COO	306 -210
S4215TS	COO	306 -211
S4220	♦COO	306 -214
S4220TS	COO	306 -215
S4225	COO	306 -216
S4225TS	COO	306 -217
S4230	♦COO	306 -218
S4230TS	COO	306 -219
S4235	COO	306 -220
S4235TS	COO	307 - 1
S4240	♦COO	307 - 4
S4240TS	COO	307 - 5
S4245	COO	307 - 6
S4245TS	COO	307 - 7
S4250	♦COO	307 - 8
S4250TS	COO	307 - 9
S4260	♦COO	307 - 11
S4260TS	COO	307 - 12
S4270	COO	307 - 14
S4270TS	COO	307 - 15
S4280	♦COO	307 - 17
S4280TS	COO	307 - 18
S4290	COO	307 - 19
S4290TS	COO	307 - 20
S4305	COO	307 - 42
S4305TS	COO	307 - 43
S4310	♦COO	307 - 64
S4310TS	COO	307 - 65
S4315	COO	307 - 78
S4315TS	COO	307 - 79
S4320	♦COO	307 - 95
S4320TS	COO	307 - 96
S4325	COO	307 -116
S4325TS	COO	307 -117
S4330	♦COO	307 -130
S4330TS	COO	307 -131
S4335	COO	307 -144
S4335TS	COO	307 -145
S4340	♦COO	307 -161
S4340TS	COO	307 -162
S4345	COO	307 -179
S4345TS	COO	307 -180
S4350	♦COO	307 -189
S4350TS	COO	307 -190
S4360	♦COO	307 -206
S4360TS	COO	307 -207
S4370	COO	308 - 12
S4370TS	COO	308 - 13
S4380	♦COO	308 - 31
S4380TS	COO	308 - 32
S4390	COO	308 - 52
S4390TS	COO	308 - 53
S04501DF	♦COO	258 -149
S04502DF	♦COO	259 - 98
S04503DF	♦COO	259 -200
S04504DF	♦COO	260 - 65
S5162	♦SAR	418 -163
S5305	COO	309 - 90
S5305TS	COO	309 - 91
S5310	COO	309 -103
S5310TS	COO	309 -104
S5315	COO	309 -110
S5315TS	COO	309 -111
S5320	COO	309 -123
S5320TS	COO	309 -124
S5325	COO	309 -131
S5325TS	COO	309 -132
S5330	COO	309 -143
S5330TS	COO	309 -144
S5335	COO	309 -149
S5335TS	COO	309 -150
S5340	COO	309 -163
S5340TS	COO	309 -164
S5343	♦SAR	360 - 17
S5344	♦SAR	427 -159
S5345	COO	309 -170
S5345TS	COO	309 -171
S5347	♦SAR	412 - 26
S5350	COO	309 -181
S5350TS	COO	309 -182
S5360	COO	309 -196
S5360TS	COO	309 -197
S5367	♦SAR	430 - 82
S5370	COO	309 -205
S5370TS	COO	309 -206
S5373	♦SAR	427 -160
S5380	♦COO	310 - 1
S5380TS	COO	310 - 2
S5390	COO	310 - 12
S5390TS	COO	310 - 13
S5449	♦SAR	429 -129
S05501DF	♦COO	263 -207
S05502DF	♦COO	263 -208
S05503DF	♦COO	263 -209
S5555E	SCN	328 - 55
S5556E	SCN	328 - 56
S5557E	SCN	328 - 57
S5558E	SCN	328 - 58
S5907	SCN	328 - 59
S5908	SCN	328 - 60
S5978A,9A	♦SAR	297 - 65
S5978B,9B	♦SAR	297 - 70
S5978D,9D	♦SAR	297 - 74
S5978E,9E	♦SAR	297 - 79
S5978F,9F	♦SAR	297 - 80
S5978G,9G	♦SAR	297 - 85
S5978H,9H	♦SAR	297 - 86
S6003HE	♦SEN	283 - 58
S8003HE	♦SEN	283 - 59
S8008	♦SCN	427 -163
S10003HE	♦SEN	402 - 35
S15000GP	♦SEN	429 - 71
S20100	♦COO	403 - 98
S20110	COO	405 - 87
S20120	♦COO	406 -187
S20405	COO	294 -196
S20410	♦COO	295 - 6
S20415	COO	295 - 15
S20420	♦COO	295 - 41
S20425	COO	295 - 43
S20430	COO	295 - 64
S20435	COO	295 - 66
S20440	♦COO	295 - 94
S20445	COO	295 - 95
S20450	COO	295 -113
S20460	♦COO	295 -142
S21100	♦COO	403 -122
S21110	COO	405 - 88
S21120	♦COO	406 -204
S30405	COO	301 -101
S30410	♦COO	301 -121
S30415	COO	301 -125
S30420	♦COO	301 -151
S30425	COO	301 -154
S30430	COO	301 -169
S30435	COO	301 -173
S30440	♦COO	301 -196
S30445	COO	301 -198
S30450	COO	301 -207
S30460	♦COO	302 - 13
S34100	♦COO	403 -194
S34110	COO	405 - 93
S34120	♦COO	407 - 45
S36100	♦COO	404 - 19
S36110	COO	405 - 96
S36120	♦COO	407 - 95
S37100	♦COO	404 - 35
S37110	COO	405 -100
S37120	♦COO	407 -109
S42100	♦COO	404 - 82
S42100TS	COO	404 - 83
S42110	COO	405 -111
S42110TS	COO	405 -112
S42120	♦COO	407 -175
S42120TS	COO	407 -176
S43100	♦COO	404 - 96
S43100TS	COO	404 - 97
S43110	COO	405 -115
S43110TS	COO	405 -116
S43120	♦COO	407 -188
S43120TS	COO	407 -189
S50405	COO	310 - 46
S50405TS	COO	310 - 47
S50410	♦COO	310 - 50
S50410TS	COO	310 - 51
S50415	COO	310 - 55
S50415TS	COO	310 - 56
S50420	♦COO	310 - 60
S50420TS	COO	310 - 61
S50425	COO	310 - 65
S50425TS	COO	310 - 66
S50430	♦COO	310 - 70
S50430TS	COO	310 - 71
S50435	COO	310 - 72
S50435TS	COO	310 - 73
S50440	♦COO	310 - 78
S50440TS	COO	310 - 79
S50445	COO	310 - 82
S50445TS	COO	310 - 83
S50450	♦COO	310 - 87
S50450TS	COO	310 - 88
S50460	♦COO	310 - 93
S50460TS	COO	310 - 94
S50470	COO	310 -101
S50470TS	COO	310 -102
S50480	COO	310 -113
S50480TS	COO	310 -114
S50490	COO	310 -120
S50490TS	COO	310 -121
S53100	♦COO	404 -148
S53100TS	COO	404 -149
S53110	COO	405 -126
S53110TS	COO	405 -127
S53120	♦COO	408 - 22
S53120TS	COO	408 - 23
S306010F	♦COO	304 - 40
S306020F	♦COO	304 - 72
S306040F	♦COO	304 -118
S306060F	♦COO	304 -157
S306080F	♦COO	304 -189
S306100F	♦COO	404 - 17
S306120F	♦COO	407 - 93
S307010F	♦COO	305 - 67
S307020F	♦COO	305 - 79
S307040F	♦COO	305 - 96
S307060F	♦COO	305 -111
S504100	COO	404 -166
S504100TS	COO	404 -167
S504110	COO	405 -133
S504110TS	COO	405 -134
S504120	COO	408 - 42
S504120TS	COO	408 - 43
S-15	SAKJ	279 -103
S-34	SAKJ	241 - 92
SA02PCN/R022(A)	WESB	445 - 92
SA03PCN/R022(A)	WESB	445 - 93
SA04PCN/R022(A)	WESB	445 - 94
SA05PCN/R022(A)	WESB	445 - 95
SA06PCN/R022(A)	WESB	445 - 96
SA07PCN/R022(A)	WESB	445 - 97
SA08PCN022	WESB	299 -161
SA08PCN/R022(A)	WESB	445 - 98
SA09PCN/R022(A)	WESB	445 - 99
SA10PCN020	♦WESB	403 -160
SA10PCN030	♦WESB	403 -163
SA10PCN040	♦WESB	404 - 10
SA10PCN051	WESB	403 -190
SA10PCN055	♦WESB	404 - 26
SA10PCN061	WESB	403 -215
SA10PCN075	♦WESB	404 - 28
SA10PCN/R022(A)	WESB	445 -100
SA10PCN/R031(A)	WESB	445 -101
SA10PCN/R051(A)	WESB	445 -102
SA10PCN/R061(A)	WESB	445 -103
SA11PCN/R022(A)	WESB	445 -104
SA11PCN/R031(A)	WESB	445 -105
SA11PCN/R051(A)	WESB	445 -106
SA11PCN/R061(A)	WESB	445 -107
SA12PCN020	♦WESB	407 - 3
SA12PCN030	♦WESB	407 - 7
SA12PCN040	♦WESB	407 - 87
SA12PCN055	♦WESB	407 -101
SA12PCN061	WESB	407 - 71
SA12PCN075	♦WESB	407 -103
SA12PCN/R031(A)	WESB	445 -108
SA12PCN/R051(A)	WESB	445 -109
SA12PCN/R061(A)	WESB	445 -110
SA13PCN/R031(A)	WESB	446 - 1
SA13PCN/R051(A)	WESB	446 - 2
SA13PCN/R061(A)	WESB	446 - 3
SA14PCN061	WESB	409 -178
SA14PCN/R031(A)	WESB	446 - 4
SA14PCN/R051(A)	WESB	446 - 5
SA14PCN/R061(A)	WESB	446 - 6
SA15PCN/R031(A)	WESB	446 - 7
SA15PCN/R051(A)	WESB	446 - 8
SA15PCN/R061(A)	WESB	446 - 9
SA16PCN031(A)	WESB	412 -126
SA16PCN051(A)	WESB	412 -149
SA16PCN061	WESB	412 -165
SA16PCN/R031(A)	WESB	446 - 10
SA16PCN/R051(A)	WESB	446 - 11
SA16PCN/R061(A)	WESB	446 - 12
SA40	♦SELI	238 - 42
SA42	♦SELI	238 - 77
SA43	♦SELI	238 -134
SA44	♦SELI	238 -144
SA282	SELI	236 -128
SA283	SELI	236 -129
SA1002CA	GSE	353 - 15
SA-2	♦SAKJ	284 -114
SA-2A	SAKJ	284 -216
SA-2B	♦SAKJ	285 - 71
SA-2C	♦SAKJ	402 - 72
SA-2Z	SAKJ	284 - 7
SAM15	♦SSI	256 -120
SAM15F	♦SSI	256 -109
SAM15UF	♦SSI	256 -105
SAM20	♦SSI	256 -147
SAM20F	♦SSI	256 -134
SAM20UF	♦SSI	256 -131
SAM25	♦SSI	256 -167
SAM25F	♦SSI	256 -155
SAM25UF	♦SSI	256 -150
SAM30	♦SSI	256 -185
SAM30F	♦SSI	256 -173
SAM30UF	♦SSI	256 -170
SAM35	♦SSI	256 -190
SAM35F	♦SSI	256 -189
SAM35UF	♦SSI	256 -188
SAM40	♦SSI	256 -203
SAM40F	♦SSI	256 -195
SAM40UF	♦SSI	256 -191
SAM60F	♦SSI	256 -174
SAM60UF	♦SSI	257 - 7
SAM70F	♦SSI	257 - 21
SAM70UF	♦SSI	257 - 20
SAM80F	♦SSI	257 - 35
SAM80UF	♦SSI	257 - 31
SAM90F	♦SSI	257 - 43
SAM90UF	♦SSI	257 - 42
SB120	♦GIC	374 - 25
SB120-11	♦GIC	374 - 26
SB130	♦GIC	374 - 35
SB140	♦GIC	374 - 41
SB150	♦GIC	374 - 49
SB151	♦RFE	369 - 5
SB152	♦RFE	369 - 31
SB154	♦RFE	369 - 58
SB156	♦RFE	369 - 83
SB160	♦GIC	374 - 52
SB180	♦GIC	374 - 55
SB200	♦DIX	362 -187
SB201	♦DIX RECT	363 - 17
SB202	♦DIX RECT	363 - 58
SB203	RECT	363 - 59
SB204	♦DIX RECT	363 -106
SB205	RECT	363 -150
SB206	♦DIX RECT	363 -151
SB207	RECT	363 -217
SB208	♦DIX	363 -189
SB210	♦DIX	363 -218
SB251	♦RFE	369 -215
SB252	♦RFE	370 - 26
SB254	♦RFE	370 - 63
SB256	♦RFE	370 - 98
SB305	♦RFE	364 -101
SB310	♦RFE	364 -112
SB320	♦GIC	374 - 70
SB320#B	♦RFE	364 -127
SB330	♦GIC	374 - 74
SB340	♦GIC	374 - 79
SB340#B	♦RFE	364 -144
SB350	♦GIC	374 - 84
SB351	♦RFE	371 - 45
SB352	♦RFE	371 - 64
SB354	♦RFE	371 - 81
SB356	♦RFE	371 - 97
SB360	♦GIC	374 - 87
SB360#B	♦RFE	364 -159
SB380	♦GIC	374 - 89
SB380#B	♦RFE	364 -174
SB400	♦DIX	365 - 22
SB401	♦DIX	365 - 42
SB402	♦DIX	365 - 62
SB404	♦DIX	365 - 84
SB406	♦DIX	365 -106
SB408	♦DIX	365 -124
SB410	♦DIX	365 -137
SB501	♦RECT	365 -164
SB502	♦RECT	365 -174
SB503	♦RECT	365 -186
SB504	♦RECT	365 -199
SB505	♦RECT	366 - 4
SB506	♦RECT	366 - 12
SB507	♦RECT	402 -206
SB520	♦GIC	374 -102
SB530	♦GIC	374 -105
SB540	♦GIC	374 -109
SB550	♦GIC	374 -113
SB560	♦GIC	374 -116
SB580	♦GIC	374 -119
SB601	♦RFE	365 - 23
SB602	♦RFE	365 - 43
SB603	♦RFE	365 - 63
SB604	♦RFE	365 - 85
SB605	♦RECT	366 -131
SB605#B	♦RFE	365 -107
SB606	♦RECT	366 -158
SB606#B	♦RFE	365 -125
SB607	♦RECT	366 - 20
SB607#B	♦RFE	365 -138
SB820	♦GIC	375 -138
SB830	♦GIC	375 -139
SB840	♦GIC	375 -141
SB850	♦GIC	375 -143
SB860	♦GIC	375 -145
SB880	♦GIC	375 -147
SB1020	GIC	293 -195
SB1035	GIC	293 -197
SB1045	GIC	293 -199
SB1505	♦RFE	368 -208
SB1620	♦GIC	374 -188
SB1630	♦GIC	374 -194
SB1640	♦GIC	374 -200
SB1650	♦GIC	374 -206
SB1660	♦GIC	374 -208
SB1680	♦GIC	374 -210
SB2505	♦RFE	369 -192
SB3020	♦GIC	375 - 5
SB3030	♦GIC	375 - 8
SB3040	♦GIC	375 - 16
SB3050	♦GIC	375 - 33
SB3060	♦GIC	375 - 37
SB3080	♦GIC	375 - 38
SB3100	♦RFE	364 -185
SB3505	♦RFE	371 - 26
SB-2	SAKJ	284 -158
SB-2B	SAKJ	282 - 67
SB-2C	SAKJ	401 -197
SBMB0	♦SET	362 -109
SBR1F	♦SET	360 -133
SBR2	♦SET	362 - 6
SBR2F	♦SET	360 -168
SBR4	♦SET	362 - 43
SBR4F	♦SET	360 -203
SBR05	♦SCN	361 -148
SBR6A1	♦SCN	366 - 42
SBR6A2	♦SCN	366 - 66
SBR6A3	♦SCN	366 - 94
SBR6A05	♦SCN	366 -124
SBR10	♦SET	362 -121
SBR10A1	SCN	367 -138
SBR10A2	♦SCN	367 -176
SBR10A3	♦SCN	367 -200

Δ-Registered with JEDEC by this manufacturer

♦-Mfr's data sheet available in microfilm service

1. TYPE No. CROSS INDEX

IN TYPE NUMBER SEQUENCE

TYPE No.	MFRS	Pg&Line
SBR10A4	♦SCN	367 -216
SBR10A05	♦SCN	367 -108
SBR10A5	♦SCN	368 - 20
SBR10A6	♦SCN	368 - 34
SBR10A8	♦SCN	368 - 66
SBR10A10	♦SCN	368 - 85
SBR15FF	♦SET	360 -141
SBR20	♦SET	360 - 24
SBR25F	♦SET	360 - 26
SBR30	♦SET	360 - 28
SBR3035	♦COO	375 - 13
SBR3040	♦COO	375 - 21
SBR3045	♦COO	375 - 30
SBR3050	♦COO	375 - 34
SBR8035	♦COO	375 -111
SBR8040	♦COO	375 -112
SBR8045	♦COO	375 -114
SBR8050	♦COO	375 -115
SBS1620	♦GIC	374 -190
SBS1635	♦GIC	374 -196
SBS1640	♦GIC	374 -202
SBS1645	♦GIC	374 -204
SBS3020M	♦GIC	375 - 4
SBS3030M	♦GIC	375 - 7
SBS3040M	♦GIC	375 - 15
SBS3050M	♦GIC	375 - 32
SBS3060M	♦GIC	375 - 36
SBT3035	♦COO	375 - 14
SBT3040	♦COO	375 - 22
SBT3045	♦COO	375 - 31
SBT3050	♦COO	375 - 35
SC3AS4F	♦SET	306 -186
SC3AS6	♦SET	307 - 10
SC3BA1F	SET	372 -156
SC3BA2	♦SET	373 - 79
SC3BA2F	♦SET	373 - 71
SC3BA4	♦SET	373 - 80
SC3BA4F	♦SET	373 - 72
SC3BA05F	♦SET	372 -155
SC3BA6	♦SET	373 - 82
SC3BA10FF	♦SET	372 -185
SC3BH1F	♦SET	372 -128
SC3BH2	♦SET	373 - 36
SC3BH2F	♦SET	373 - 11
SC3BH4	♦SET	373 - 38
SC3BH4F	♦SET	373 - 18
SC3BH6	♦SET	373 - 41
SC3BJ2	♦SET	372 -163
SC3BJ2F	♦SET	372 -124
SC3BJ4	♦SET	372 -170
SC3BJ4F	♦SET	372 -125
SC3BJ05F	♦SET	372 -103
SC3BJ6	♦SET	372 -179
SC3BK4	♦SET	373 - 73
SC3BK4F	♦SET	373 - 45
SC3BK6	♦SET	373 - 76
SC3HAS4FN	♦SET	307 - 28
SC3HAS4FP	♦SET	307 - 29
SC3HAS6N	♦SET	308 - 58
SC3HAS6P	♦SET	308 - 59
SC15	SAKJ	411 - 22
SC20	♦SCN	415 - 9
SC20#B	SAKJ	442 - 70
SC20F	♦SCN	415 - 62
SC30	♦SCN	419 -100
SC30F	♦SCN	419 -146
SC40	♦SCN	422 - 5
SC40F	♦SCN	422 - 6
SC50	♦SCN	423 -204
SC50F	♦SCN	423 -205
SC60	♦SCN	424 -216
SC60F	♦SCN	424 -217
SC70	♦SCN	425 -101
SC70F	♦SCN	425 -102
SC80	♦SCN	426 - 84
SC80F	♦SCN	426 - 85
SC114G1	♦HITJ	369 - 13
SC116G1	♦HITJ	369 - 14
SC150	SELI	442 - 23
SC200	SELI	442 - 24
SC250	SELI	442 - 25
SC300	SELI	442 - 26
SCA114W	♦HITJ	367 -168
SCA116BW	♦HITJ	369 - 15
SCAJ1F	♦SET	365 -142
SCAJ2	♦SET	369 - 22
SCAJ2F	♦SET	367 - 95
SCAJ4	♦SET	369 - 50
SCAJ4F	♦SET	367 - 97
SCAJ05F	♦SET	365 -140
SCAJ05FF	♦SET	365 -158
SCAJ6	♦SET	369 - 74
SCAJ10FF	♦SET	365 -171
SCAJ15FF	♦SET	365 -175
SCAS4F	♦SET	304 -209
SCAS6	♦SET	305 -107
SCAS15FF	♦SET	305 - 73
SCB114Y	♦HITJ	369 -155
SCB116BY	♦HITJ	370 -169
SCBA1F	♦SET	368 -193
SCBA2	♦SET	372 - 23
SCBA2F	♦SET	372 - 4
SCBA4	♦SET	372 - 33
SCBA4F	♦SET	372 - 7
SCBA05F	♦SET	368 -192
SCBA05FF	♦SET	369 -140
SCBA6	♦SET	372 - 42
SCBA10FF	♦SET	369 -142
SCBA15FF	♦SET	369 -123
SCBAR4F	♦SET	371 -191
SCBAR6	♦SET	371 -199
SCBAR10	♦SET	371 -208
SCBAR15FF	♦SET	371 -178
SCBH1F	♦SET	367 -143

TYPE No.	MFRS	Pg&Line
SCBH2	♦SET	371 -180
SCBH2F	♦SET	371 -181
SCBH4	♦SET	371 -188
SCBH4F	♦SET	371 -189
SCBH05F	♦SET	367 -112
SCBH05FF	♦SET	368 -102
SCBH6	♦SET	371 -197
SCBH10FF	♦SET	368 -121
SCBH15FF	♦SET	368 -124
SCBK2	SET	371 -150
SCBK2F	SET	371 - 6
SCBK4F	SET	371 - 7
SCBK6	♦SET	371 -151
SCBK15FF	♦SET	301 - 68
SCC114Y	♦HITJ	370 -170
SCC116BY	♦HITJ	371 -163
SCDA1F	♦SET	296 - 4
SCDA2	♦SET	296 - 87
SCDA2F	♦SET	296 - 8
SCDA4	♦SET	296 -129
SCDA4F	♦SET	293 -154
SCDA05F	♦SET	295 -220
SCDA6	♦SET	296 -160
SCDA10FF	♦SET	293 - 78
SCDAR4	♦SET	299 - 35
SCDAR6	♦SET	303 - 4
SCDAR10	♦SET	403 -203
SCDAS4A	♦SET	308 -179
SCDAS4F	♦SET	301 - 76
SCDAS15FF	♦SET	302 -106
SCF5000	♦SET	256 -210
SCF7500	♦SET	257 - 24
SCF10000	♦SET	257 - 50
SCF12500	♦SET	257 - 62
SCFM5K	♦SET	423 -114
SCFM7.5K	♦SET	425 -142
SCFM10K	♦SET	427 - 68
SCFM12.5K	♦SET	428 - 77
SCFM15K	♦SET	429 - 52
SCFS2000	♦SET	415 -120
SCFS2500	♦SET	256 -156
SCFS4000	♦SET	415 -121
SCFS6000	♦SET	425 - 26
SCFS8000	♦SET	426 -120
SCFS10000	♦SET	257 - 51
SCFS12000	♦SET	428 -141
SCH120	♦GIC	446 - 13
SCH130	♦GIC	446 - 14
SCH140	♦GIC	446 - 15
SCH150	♦GIC	446 - 16
SCH160	♦GIC	446 - 17
SCH320	♦GIC	446 - 18
SCH330	♦GIC	446 - 19
SCH340	♦GIC	446 - 20
SCH350	♦GIC	446 - 21
SCH360	♦GIC	446 - 22
SCH520	♦GIC	446 - 23
SCH530	♦GIC	446 - 24
SCH540	♦GIC	446 - 25
SCH550	♦GIC	446 - 26
SCH560	♦GIC	446 - 27
SCH1020	♦GIC	446 - 28
SCH1030	♦GIC	446 - 29
SCH1040	♦GIC	446 - 30
SCH1050	♦GIC	446 - 31
SCH1060	♦GIC	446 - 32
SCH5000	♦SET	424 - 32
SCH7500	♦SET	425 -206
SCH12500	♦SET	428 -110
SCH15000	♦SET	429 - 90
SCH20000	♦SET	430 -172
SCH25000	♦SET	431 -135
SCHJ15K	♦SET	276 -131
SCHJ22.5K	♦SET	431 - 19
SCHJ30K	♦SET	432 - 71
SCHJ37.5K	♦SET	432 -153
SCHJ45K	♦SET	433 - 1
SCHM5K	♦SET	423 -115
SCHM7.5K	♦SET	425 -143
SCHM10K	♦SET	427 - 69
SCHM12.5K	♦SET	428 - 78
SCHM15K	♦SET	429 - 53
SCHS2500	♦SET	417 -193
SCHS5000	♦SET	424 - 51
SCHS7500	♦SET	425 -208
SCHS10000	♦SET	427 -177
SCHS12500	♦SET	406 -196
SCHS15000	♦SET	429 -166
SCKV12K30	♦SET	428 -126
SCKV12K40	♦SET	428 -127
SCKV18K30	♦SET	430 - 67
SCKV18K40	♦SET	430 - 68
SCKV25K30	♦SET	431 -148
SCKV25K40	♦SET	431 -149
SCKV30K12F	♦SET	432 - 56
SCKV33K12	♦SET	432 -115
SCKV45K12	♦SET	433 - 9
SCKV45K12F	♦SET	433 - 8
SCKV60K12F	♦SET	433 - 83
SCKV66K12	♦SET	433 - 88
SCKV100K3	♦SET	433 -127
SCKV150K3	♦SET	433 -191
SCKV200K3	♦SET	433 -203
SCNA1F	♦SET	296 - 5
SCNA2	♦SET	296 - 88
SCNA2F	♦SET	296 - 9
SCNA4	♦SET	296 -130
SCNA4F	♦SET	293 -155
SCNA05F	♦SET	296 - 1
SCNA6	♦SET	303 -181
SCNA10FF	♦SET	296 -193
SCNAR4F	♦SET	302 - 50
SCNAR6	♦SET	302 -220
SCNAR10	♦SET	403 -196

TYPE No.	MFRS	Pg&Line
SCNAS4F	♦SET	305 - 29
SCNAS15FF	♦SET	305 -157
SCPA2	♦SET	296 - 89
SCPA2F	♦SET	296 - 10
SCPA4	♦SET	296 -131
SCPA4F	♦SET	293 -156
SCPA05F	♦SET	296 - 2
SCPA6	♦SET	303 -182
SCPA10FF	♦SET	296 -194
SCPAR4F	♦SET	302 - 48
SCPAR6	♦SET	302 -218
SCPAR10	♦SET	403 -197
SCPAS4F	♦SET	305 - 30
SCPAS15FF	♦SET	305 -158
SCPHN6	♦SET	425 - 17
SCPHN10	♦SET	427 -201
SCPHN16	♦SET	429 -218
SCPHN20	♦SET	430 -207
SCPHN26	♦SET	431 -194
SCPHN30	♦SET	432 -101
SCPND5	♦SET	424 - 38
SCPND10	♦SET	427 -202
SCPND15	♦SET	429 -157
SCPNN5	♦SET	424 - 47
SCPNN10	♦SET	427 -209
SCPNN15	♦SET	429 -163
SCPNP5	♦SET	424 - 48
SCPNP10	♦SET	427 -210
SCPNP15	♦SET	429 -164
SCSDF4L	♦SET	254 -200
SCSDFF15L	♦SET	274 - 9
SCSDMOL	♦SET	403 -198
SCSF4	♦SET	254 -201
SCSFF15	♦SET	274 - 10
SCSM0	SET	401 - 5
SCSNF4L	♦SET	254 -215
SCSNFF15	SET	274 - 11
SCSNFF15L	♦SET	274 - 12
SCSNL05L	♦SET	252 - 77
SCSNL05W	♦SET	252 - 78
SCSNMOL	♦SET	403 -199
SCSPF4L	♦SET	254 -202
SCSPFF05	SET	274 - 3
SCSPFF15L	♦SET	274 - 13
SCSPM6L	♦SET	255 -132
SCSPM6W	SET	255 -133
SCSPMOL	♦SET	403 -200
SD2A	♦SELI	442 - 71
SD10	♦DIT	302 -111
SD15	♦DIT	302 -112
SD20	♦DIT	302 -113
SD25	♦DIT	302 -115
SD30	♦DIT	274 - 65
SD31	♦TRWS	437 - 16
SD32	♦TRWS	437 - 17
SD040N02P	♦SISI	301 -142
SD040N04P	♦SISI	301 -188
SD040N06P	♦SISI	302 - 4
SD040N08P	♦SISI	302 - 36
SD040N10P	♦SISI	403 -186
SD040N12P	♦SISI	407 - 38
SD040N14P	♦SISI	409 -154
SD040N16P	♦SISI	412 -144
SD040R02P	♦SISI	301 -143
SD040R04P	♦SISI	301 -189
SD040R06P	♦SISI	302 - 5
SD040R08P	♦SISI	302 - 37
SD040R10P	♦SISI	403 -187
SD040R12P	♦SISI	407 - 39
SD040R14P	♦SISI	409 -155
SD040R16P	♦SISI	412 -145
SD40	♦BELI	248 -102
SD041N02P	♦SISI	301 -144
SD041N04P	♦SISI	301 -190
SD041N06P	♦SISI	302 - 6
SD041N08P	♦SISI	302 - 38
SD041N10P	♦SISI	403 -188
SD041N12P	♦SISI	407 - 40
SD041N14P	♦SISI	409 -156
SD041N16P	♦SISI	412 -146
SD041R02P	♦SISI	301 -145
SD041R04P	♦SISI	301 -191
SD041R06P	♦SISI	302 - 7
SD041R08P	♦SISI	302 - 39
SD41	♦MOTA	375 - 28
♦TRWO	♦TRWS	
	♦UNI	
SD50#B	♦BELI	235 -111
SD51	♦INR	375 -122
♦MOTA	♦TRWO	
♦TRWS	♦UNI	
SD51#B	♦DIT	302 -120
SD60P	ORIJ	442 - 72
SD61P	ORIJ	442 - 73
SD61PA	ORIJ	274 -215
SD070N02P	♦SISI	304 - 77
SD070N04P	♦SISI	304 -123
SD070N06P	♦SISI	304 -162
SD070N08P	♦SISI	304 -195
SD070N10P	♦SISI	404 - 22
SD070N12P	♦SISI	407 - 97
SD070N14P	♦SISI	409 -190
SD070N16P	♦SISI	412 -176
SD070R02P	♦SISI	304 - 78
SD070R04P	♦SISI	304 -124
SD070R06P	♦SISI	304 -163
SD070R08P	♦SISI	304 -196
SD070R10P	♦SISI	404 - 23
SD070R12P	♦SISI	407 - 98
SD070R14P	♦SISI	409 -191
SD070R16P	♦SISI	412 -177
SD071N02P	♦SISI	304 - 79
SD071N04P	♦SISI	304 -125
SD071N06P	♦SISI	304 -164

TYPE No.	MFRS	Pg&Line
SD071N08P	♦SISI	304 -197
SD071N10P	♦SISI	404 - 24
SD071N12P	♦SISI	407 - 99
SD071N14P	♦SISI	409 -192
SD071N16P	♦SISI	412 -178
SD071R02P	♦SISI	304 - 80
SD071R04P	♦SISI	304 -126
SD071R06P	♦SISI	304 -165
SD071R08P	♦SISI	304 -198
SD071R10P	♦SISI	404 - 25
SD071R12P	♦SISI	407 -100
SD071R14P	♦SISI	409 -193
SD071R16P	♦SISI	412 -179
SD71	♦TRWS	437 - 18
SD72	♦TRWS	437 - 19
SD75	♦TRWO	437 - 20
	♦TRWS	
SD80	♦SELI	446 - 33
SD090N02P	♦SISI	305 -135
SD090N04P	♦SISI	305 -141
SD090N06P	♦SISI	305 -147
SD090N08P	♦SISI	305 -153
SD090N10P	♦SISI	404 - 40
SD090N12P	♦SISI	407 -115
SD090N14P	♦SISI	409 -204
SD090N16P	♦SISI	412 -189
SD090R02P	♦SISI	305 -136
SD090R04P	♦SISI	305 -142
SD090R06P	♦SISI	305 -148
SD090R08P	♦SISI	305 -154
SD090R10P	♦SISI	404 - 41
SD090R12P	♦SISI	407 -116
SD090R14P	♦SISI	409 -205
SD090R16P	♦SISI	412 -190
SD091N02P	♦SISI	305 -137
SD091N04P	♦SISI	305 -143
SD091N06P	♦SISI	305 -149
SD091N08P	♦SISI	305 -155
SD091N10P	♦SISI	404 - 42
SD091N12P	♦SISI	407 -117
SD091N14P	♦SISI	409 -206
SD091N16P	♦SISI	412 -191
SD091R02P	♦SISI	305 -138
SD091R04P	♦SISI	305 -144
SD091R06P	♦SISI	305 -150
SD091R08P	♦SISI	305 -156
SD091R10P	♦SISI	404 - 43
SD091R12P	♦SISI	407 -118
SD091R14P	♦SISI	409 -207
SD091R16P	♦SISI	412 -192
SD101A	♦ITTG	437 - 44
SD101B	♦ITTG	437 - 45
SD101C	♦ITTG	437 - 46
SD103A	ITTG	437 - 21
SD103B	ITTG	437 - 22
SD103C	ITTG	437 - 23
SD150N02M	♦SISI	307 - 97
SD150N02P	♦SISI	307 - 98
SD150N04M	♦SISI	307 -163
SD150N04P	♦SISI	307 -164
SD150N06M	♦SISI	307 -208
SD150N06P	♦SISI	307 -209
SD150N08M	♦SISI	308 - 33
SD150N08P	♦SISI	308 - 34
SD150N10M	♦SISI	404 - 98
SD150N10P	♦SISI	404 - 99
SD150N12M	♦SISI	407 -190
SD150N12P	♦SISI	407 -191
SD150N14M	♦SISI	410 - 30
SD150N14P	♦SISI	410 - 31
SD150N16M	♦SISI	413 - 5
SD150N16P	♦SISI	413 - 6
SD150R02M	♦SISI	307 - 99
SD150R02P	♦SISI	307 -100
SD150R04M	♦SISI	307 -165
SD150R04P	♦SISI	307 -166
SD150R06M	♦SISI	307 -210
SD150R06P	♦SISI	307 -211
SD150R08M	♦SISI	308 - 35
SD150R08P	♦SISI	308 - 36
SD150R10M	♦SISI	404 -100
SD150R10P	♦SISI	404 -101
SD150R12M	♦SISI	407 -192
SD150R12P	♦SISI	407 -193
SD150R14M	♦SISI	410 - 32
SD150R14P	♦SISI	410 - 33
SD150R16M	♦SISI	413 - 7
SD150R16P	♦SISI	413 - 8
SD160	PIHS	234 - 97
SD200N02M	♦SISI	308 -163
SD200N02P	♦SISI	308 -164
SD200N04M	♦SISI	308 -183
SD200N04P	♦SISI	308 -184
SD200N06M	♦SISI	308 -199
SD200N06P	♦SISI	308 -200
SD200N08M	♦SISI	308 -217
SD200N08P	♦SISI	308 -218
SD200N10M	♦SISI	404 -125
SD200N10P	♦SISI	404 -126
SD200N12M	♦SISI	407 -218
SD200N12P	♦SISI	407 -219
SD200N14M	♦SISI	410 - 48
SD200N14P	♦SISI	410 - 49
SD200N16M	♦SISI	413 - 19
SD200N16P	♦SISI	413 - 20
SD200R02M	♦SISI	308 -165
SD200R02P	♦SISI	308 -166
SD200R04M	♦SISI	308 -185
SD200R04P	♦SISI	308 -186
SD200R06M	♦SISI	308 -201
SD200R06P	♦SISI	308 -202
SD200R08M	♦SISI	308 -219
SD200R08P	♦SISI	308 -220
SD200R10M	♦SISI	404 -127

TYPE No.	MFRS	Pg&Line
SD200R10P	♦SISI	404 -128
SD200R12M	♦SISI	407 -220
SD200R12P	♦SISI	408 - 1
SD200R14M	♦SISI	410 - 50
SD200R14P	♦SISI	410 - 51
SD200R16M	♦SISI	413 - 21
SD200R16P	♦SISI	413 - 22
SD241	♦DII	437 - 24
GIC	♦INR	
♦TRWO	♦TRWS	
	♦UNI	
SD241#B	♦MOTA	299 -216
SD300C02C	♦SISI	311 -195
SD300C04C	♦SISI	311 -197
SD300C06C	♦SISI	311 -198
SD300C08C	♦SISI	311 -200
SD300C10C	♦SISI	404 -216
SD300C12C	♦SISI	408 -100
SD300C14C	♦SISI	410 -134
SD300C16C	♦SISI	413 - 78
SD300N02M	♦SISI	310 -158
SD300N02P	♦SISI	310 -159
SD300N04M	♦SISI	310 -164
SD300N04P	♦SISI	310 -165
SD300N06M	♦SISI	310 -171
SD300N06P	♦SISI	310 -172
SD300N08M	♦SISI	310 -178
SD300N08P	♦SISI	310 -179
SD300R02M	♦SISI	310 -160
SD300R02P	♦SISI	310 -161
SD300R04M	♦SISI	310 -166
SD300R04P	♦SISI	310 -167
SD300R06M	♦SISI	310 -173
SD300R06P	♦SISI	310 -174
SD300R08M	♦SISI	310 -180
SD300R08P	♦SISI	310 -181
SD300R10M	♦SISI	404 -174
SD300R10P	♦SISI	404 -175
SD300R12M	♦SISI	408 - 54
SD300R12P	♦SISI	408 - 55
SD300R14M	♦SISI	410 - 87
SD300R14P	♦SISI	410 - 88
SD300R16M	♦SISI	413 - 51
SD300R16P	♦SISI	413 - 52
SD400C02C	♦SISI	312 - 5
SD400C04C	♦SISI	312 - 12
SD400C06C	♦SISI	312 - 20
SD400C08C	♦SISI	312 - 28
SD400C10C	♦SISI	405 - 2
SD400C12C	♦SISI	408 -108
SD400C14C	♦SISI	410 -142
SD400C16C	♦SISI	413 - 86
SD400N02M	♦SISI	310 -201
SD400N02P	♦SISI	310 -202
SD400N04M	♦SISI	311 - 2
SD400N04P	♦SISI	311 - 3
SD400N06M	♦SISI	311 - 23
SD400N06P	♦SISI	311 - 24
SD400N08M	♦SISI	311 - 44
SD400N08P	♦SISI	311 - 45
SD400N10M	♦SISI	404 -182
SD400N10P	♦SISI	404 -183
SD400N12M	♦SISI	408 - 62
SD400N12P	♦SISI	408 - 63
SD400N14M	♦SISI	410 - 97
SD400N14P	♦SISI	410 - 98
SD400N16M	♦SISI	413 - 56
SD400N16P	♦SISI	413 - 57
SD400R02M	♦SISI	310 -203
SD400R02P	♦SISI	310 -204
SD400R04M	♦SISI	311 - 4
SD400R04P	♦SISI	311 - 5
SD400R06M	♦SISI	311 - 25
SD400R06P	♦SISI	311 - 26
SD400R08M	♦SISI	311 - 46
SD400R08P	♦SISI	311 - 47
SD400R10M	♦SISI	404 -184
SD400R10P	♦SISI	404 -185
SD400R12M	♦SISI	408 - 64
SD400R12P	♦SISI	408 - 65
SD400R14M	♦SISI	410 - 99
SD400R14P	♦SISI	410 -100
SD400R16M	♦SISI	413 - 58
SD400R16P	♦SISI	413 - 59
SD455	SELI	234 - 89
SD914	THEF	246 -135
SD4145	♦COO	375 - 26
SD5145	♦COO	375 - 70
SD5171	♦TRWO	437 - 25
	♦TRWS	
SD5171#B	MOTA	303 - 66
SD24145	♦COO	375 - 27
SD-60P	ORIJ	274 - 43
SD-60PA	ORIJ	274 -140
SD-61P	ORIJ	274 -216
SD-61PA	ORIJ	274 -217
SDA113A	♦SSI	287 -194
SDA113B	♦SSI	288 - 32
SDA113C	♦SSI	288 -112
SDA113D	♦SSI	288 -210
SDA113E	♦SSI	289 - 74
SDA113F	♦SSI	289 -142
SDA113G	♦SSI	402 -176
SDA117A	♦SSI	362 -191
SDA117B	♦SSI	363 - 21
SDA117C	♦SSI	363 - 63
SDA117D	♦SSI	363 -110
SDA117E	♦SSI	363 -155
SDA117F	♦SSI	363 -193
SDA117G	♦SSI	364 - 4
SDA130A	♦SSI	369 -141
SDA130B	♦SSI	369 -143
SDA130C	♦SSI	369 -144
SDA130D	♦SSI	369 -145

Δ-Registered with JEDEC by this manufacturer

♦-Mfr's data sheet available in microfilm service

1. TYPE No. CROSS INDEX

IN TYPE NUMBER SEQUENCE

TYPE No.	MFRS	Pg&Line
SDA130E	♦SSI	369 -146
SDA130F	♦SSI	369 -147
SDA130G	♦SSI	369 -148
SDA132A	♦SSI	371 -173
SDA132B	♦SSI	371 -175
SDA132C	♦SSI	371 -182
SDA132D	♦SSI	371 -190
SDA132E	♦SSI	371 -198
SDA132F	♦SSI	371 -203
SDA132G	♦SSI	371 -207
SDA138A	♦SSI	365 -162
SDA138B	♦SSI	365 -172
SDA138C	♦SSI	365 -184
SDA138D	♦SSI	365 -197
SDA138E	♦SSI	366 - 2
SDA138F	♦SSI	366 - 11
SDA138G	♦SSI	366 - 16
SDA165A	♦SSI	367 -113
SDA165B	♦SSI	367 -144
SDA165C	♦SSI	367 -182
SDA165D	♦SSI	368 - 2
SDA165E	♦SSI	368 - 40
SDA165F	♦SSI	368 - 70
SDA165G	♦SSI	368 - 87
SDA167A	♦SSI	373 - 2
SDA167B	♦SSI	373 - 6
SDA167C	♦SSI	373 - 12
SDA167D	♦SSI	373 - 19
SDA167E	♦SSI	373 - 25
SDA167F	♦SSI	373 - 29
SDA167G	♦SSI	373 - 32
SDA168H	♦SSI	402 -209
SDA168I	♦SSI	411 -116
SDA168J	♦SSI	415 -100
SDA168K	♦SSI	417 -186
SDA168L	♦SSI	419 -172
SDA168M	♦SSI	422 - 31
SDA168N	♦SSI	424 - 33
SDA234A	♦SSI	371 -152
SDA234B	♦SSI	371 -153
SDA234C	♦SSI	371 -154
SDA234D	♦SSI	371 -155
SDA234E	♦SSI	371 -156
SDA234F	♦SSI	371 -157
SDA234G	♦SSI	371 -158
SDA263-1A	♦SSI	372 - 9
SDA263-1AF	♦SSI	372 - 10
SDA263-1B	♦SSI	372 - 13
SDA263-1BF	♦SSI	372 - 14
SDA263-1C	♦SSI	372 - 19
SDA263-1CF	♦SSI	372 - 20
SDA263-1D	♦SSI	372 - 29
SDA263-1DF	♦SSI	372 - 30
SDA263-3A	♦SSI	373 - 89
SDA263-3AF	♦SSI	373 - 90
SDA263-3AUF	♦SSI	373 - 91
SDA263-3B	♦SSI	373 - 93
SDA263-3BF	♦SSI	373 - 94
SDA263-3BUF	♦SSI	373 - 95
SDA263-3C	♦SSI	373 - 98
SDA263-3CF	♦SSI	373 - 99
SDA263-3CUF	♦SSI	373 -100
SDA263-3D	♦SSI	373 -102
SDA263-3DF	♦SSI	373 -103
SDA263-3DUF	♦SSI	373 -104
SDA263AF1	SSI	305 - 5
SDA263AF3	SSI	373 - 92
SDA263BF1	SSI	305 - 11
SDA263BF3	SSI	373 - 96
SDA263CF1	SSI	305 - 15
SDA263CF3	SSI	373 -101
SDA263DF1	SSI	305 - 20
SDA263DF3	SSI	373 -105
SDA267A	SSI	367 -114
SDA267B	SSI	367 -145
SDA267C	SSI	367 -183
SDA267D	SSI	368 - 3
SDA267E	SSI	368 - 41
SDA267F	SSI	368 - 71
SDA267G	SSI	368 - 88
SDA276A	♦SSI	361 -149
SDA276AF	SSI	360 -106
SDA276B	♦SSI	361 -173
SDA276BF	SSI	360 -134
SDA276C	♦SSI	362 - 7
SDA276CF	SSI	360 -169
SDA276D	♦SSI	362 - 44
SDA276DF	SSI	360 -204
SDA276E	♦SSI	362 - 77
SDA276EF	SSI	361 - 25
SDA276F	♦SSI	362 -104
SDA276FF	SSI	361 - 51
SDA276G	♦SSI	362 -122
SDA276GF	SSI	361 - 71
SDA276H	♦SSI	360 - 23
SDA276J	♦SSI	360 - 25
SDA276K	♦SSI	360 - 27
SDA276L	♦SSI	360 - 29
SDA294A	♦SSI	372 - 83
SDA294B	♦SSI	372 - 84
SDA294C	♦SSI	372 - 85
SDA294D	♦SSI	372 - 87
SDA294E	♦SSI	372 - 88
SDA294F	♦SSI	372 - 89
SDA294G	♦SSI	372 - 90
SDA294H	♦SSI	372 - 74
SDA294J	♦SSI	372 - 76
SDA294K	♦SSI	372 - 77
SDA294L	♦SSI	372 - 78
SDA304A	♦SSI	367 -115
SDA304B	♦SSI	367 -146
SDA304C	♦SSI	367 -184
SDA304D	♦SSI	368 - 4
SDA304E	♦SSI	368 - 42
SDA304F	♦SSI	368 - 72
SDA304G	♦SSI	368 - 89
SDA312A	♦SSI	372 -132
SDA312B	♦SSI	372 -133
SDA312C	♦SSI	372 -135
SDA312D	♦SSI	372 -136
SDA312E	♦SSI	372 -137
SDA356BF	♦SSI	253 - 44
SDA356BUF	♦SSI	252 -216
SDA356DF	♦SSI	254 - 42
SDA356DUF	♦SSI	254 - 18
SDA356GF	♦SSI	254 -174
SDA356GUF	♦SSI	254 -168
SDA356JF	♦SSI	255 - 83
SDA356JUF	♦SSI	255 - 77
SDA356KF	♦SSI	255 -173
SDA356KUF	♦SSI	255 -164
SDA356MF	♦SSI	256 - 26
SDA356MUF	♦SSI	256 - 18
SDA356NF	♦SSI	256 - 87
SDA356NUF	♦SSI	256 - 83
SDA380AD	♦SSI	271 -149
SDA380AN	♦SSI	271 -150
SDA380AP	♦SSI	271 -151
SDA380BD	♦SSI	271 -165
SDA380BN	♦SSI	271 -166
SDA380BP	♦SSI	271 -167
SDA380CD	♦SSI	272 - 11
SDA380CN	♦SSI	272 - 12
SDA380CP	♦SSI	272 - 13
SDA380DD	♦SSI	272 - 23
SDA380DN	♦SSI	272 - 24
SDA380DP	♦SSI	272 - 25
SDA380ED	♦SSI	272 - 35
SDA380EN	♦SSI	272 - 36
SDA380EP	♦SSI	272 - 37
SDA380FD	♦SSI	272 - 45
SDA380FN	♦SSI	272 - 46
SDA380FP	♦SSI	272 - 47
SDA380GD	♦SSI	272 - 55
SDA380GN	♦SSI	272 - 56
SDA380GP	♦SSI	272 - 57
SDA381AD	♦SSI	271 -143
SDA381AN	♦SSI	271 -144
SDA381AP	♦SSI	271 -145
SDA381BD	♦SSI	271 -160
SDA381BN	♦SSI	271 -161
SDA381BP	♦SSI	271 -168
SDA381CD	♦SSI	272 - 5
SDA381CN	♦SSI	272 - 6
SDA381CP	♦SSI	272 - 7
SDA381DD	♦SSI	272 - 17
SDA381DN	♦SSI	272 - 18
SDA381DP	♦SSI	272 - 19
SDA381ED	♦SSI	272 - 29
SDA381EN	♦SSI	272 - 30
SDA381EP	♦SSI	272 - 31
SDA381FD	♦SSI	272 - 41
SDA381FN	♦SSI	272 - 42
SDA381FP	♦SSI	272 - 43
SDA381GD	♦SSI	272 - 51
SDA381GN	♦SSI	272 - 52
SDA381GP	♦SSI	272 - 53
SDA382AD	♦SSI	271 -140
SDA382AN	♦SSI	271 -141
SDA382AP	♦SSI	271 -142
SDA382BD	♦SSI	271 -157
SDA382BN	♦SSI	271 -158
SDA382BP	♦SSI	271 -159
SDA382CD	♦SSI	272 - 2
SDA382CN	♦SSI	272 - 3
SDA382CP	♦SSI	272 - 4
SDA382DD	♦SSI	272 - 14
SDA382DN	♦SSI	272 - 15
SDA382DP	♦SSI	272 - 16
SDA382ED	♦SSI	272 - 26
SDA382EN	♦SSI	272 - 27
SDA382EP	♦SSI	272 - 28
SDA382FD	♦SSI	272 - 38
SDA382FN	♦SSI	272 - 39
SDA382FP	♦SSI	272 - 40
SDA382GD	♦SSI	272 - 48
SDA382GN	♦SSI	272 - 49
SDA382GP	♦SSI	272 - 50
SDA980-1	♦SCN	368 -201
SDA980-1F	♦SCN	368 -202
SDA980-2	♦SCN	368 -218
SDA980-2F	♦SCN	368 -219
SDA980-3	♦SCN	369 - 23
SDA980-3F	♦SCN	369 - 24
SDA980-4	♦SCN	369 - 36
SDA980-4F	♦SCN	369 - 37
SDA980-5	♦SCN	369 - 51
SDA980-5F	♦SCN	369 - 52
SDA980-6	♦SCN	369 - 75
SDA980-6F	♦SCN	369 - 76
SDA980-8	♦SCN	369 - 97
SDA980-10	♦SCN	369 -111
SDA985-1	♦SCN	368 -103
SDA985-2	♦SCN	368 -112
SDA985-3	♦SCN	368 -126
SDA985-4	♦SCN	368 -142
SDA985-5	♦SCN	368 -146
SDA990-1	♦SCN	370 -153
SDA990-1F	♦SCN	370 -149
SDA990-2	♦SCN	370 -161
SDA990-2F	♦SCN	370 -157
SDA990-3	♦SCN	370 -174
SDA990-3F	♦SCN	370 -166
SDA990-4	♦SCN	370 -183
SDA990-4F	♦SCN	370 -180
SDA990-5	♦SCN	370 -192
SDA990-5F	♦SCN	370 -184
SDA990-6	♦SCN	370 -211
SDA990-6F	♦SCN	370 -203
SDA990-8	♦SCN	371 - 1
SDA990-10	♦SCN	371 - 4
SDA2500F	♦SSI	256 -157
SDA5000	♦SSI	257 - 3
SDA5000F	♦SSI	256 -211
SDA7500	♦SSI	257 - 29
SDA7500F	♦SSI	257 - 25
SDA10000	♦SSI	257 - 58
SDA10000UF	♦SSI	257 - 45
SDA12500	♦SSI	257 - 67
SDA12500UF	♦SSI	257 - 63
SDA15000	♦SSI	257 - 71
SDA20000	♦SSI	257 - 75
SDA25000	♦SSI	257 - 77
SDAH2500	♦SSI	256 -168
SDAH2500F	♦SSI	256 -158
SDAH2500UF	♦SSI	256 -151
SDAH5000	♦SSI	257 - 4
SDAH5000F	♦SSI	256 -212
SDAH5000UF	♦SSI	256 -206
SDAH7500	♦SSI	257 - 30
SDAH7500F	♦SSI	257 - 26
SDAH7500UF	♦SSI	257 - 23
SDAH10000	♦SSI	257 - 59
SDAH10000F	♦SSI	257 - 52
SDAH10000UF	♦SSI	257 - 46
SDAH12500	♦SSI	257 - 68
SDAH12500F	♦SSI	257 - 65
SDAH12500UF	♦SSI	257 - 64
SDAH15000	♦SSI	257 - 72
SDBAX12(A)	♦THEF	271 -118
SDF10	♦GIC	360 - 79
SDF20	♦GIC	360 - 80
SDF30	♦GIC	360 - 83
SDF40	♦GIC	360 - 84
SDF50	♦GIC	360 - 99
SDF60	♦GIC	360 -109
SDH5KM	♦SET	423 -190
SDH5KS	♦SET	424 - 12
SDH7.5K	♦SET	425 -153
SDH10KM	♦SET	427 -150
SDH10KS	♦SET	427 -187
SDH15KM	♦SET	429 -115
SDHD5KM	♦SET	423 -191
SDHD5KS	♦SET	424 - 13
SDHD7.5K	♦SET	425 -154
SDHD10KM	♦SET	427 -151
SDHD10KS	♦SET	427 -188
SDHD15K	♦SET	429 -100
SDHD15KM	♦SET	429 -116
SDHF2.5KM	♦SET	417 -158
SDHF2.5KS	♦SET	417 -177
SDHF5KM	♦SET	423 -192
SDHF5KS	♦SET	424 - 14
SDHF7.5KM	♦SET	425 -182
SDHN5KM	♦SET	423 -218
SDHN5KS	♦SET	424 - 34
SDHN7.5K	♦SET	425 -174
SDHN10KM	♦SET	427 -178
SDHN15K	♦SET	429 -109
SDHN15KM	♦SET	429 -137
SDHN15KS	♦SET	429 -155
SDHP5KM	♦SET	423 -219
SDHP5KS	♦SET	424 - 35
SDHP7.5K	♦SET	425 -175
SDHP10KM	♦SET	427 -179
SDHP10KS	♦SET	427 -198
SDHP15K	♦SET	429 -110
SDHP15KM	♦SET	429 -138
SDR1A	♦SSI	252 - 62
SDR1B	♦SSI	253 - 29
SDR1D	♦SSI	254 - 33
SDR1G	♦SSI	254 -160
SDR1J	♦SSI	255 - 67
SDR1K	♦SSI	255 -165
SDR1M	♦SSI	256 - 19
SDR1N	♦SSI	256 - 84
SDR1P	♦SSI	256 - 97
SDR1R	♦SSI	256 - 99
SDR1S	♦SSI	256 -107
SDR1T	♦SSI	256 -122
SDR1V	♦SSI	256 -127
SDR1W	♦SSI	256 -128
SDR2G	♦SSI	254 -161
SDR2J	♦SSI	255 - 68
SDR2K	♦SSI	255 -166
SDR2M	♦SSI	256 - 20
SDR2N	♦SSI	256 - 85
SDR3A	♦SSI	252 - 63
SDR3B	♦SSI	253 - 30
SDR3D	♦SSI	254 - 34
SDR3G	♦SSI	254 -162
SDR3J	♦SSI	255 - 69
SDR3K	♦SSI	255 -167
SDR3M	♦SSI	256 - 21
SDR4G	♦SSI	254 -163
SDR4J	♦SSI	255 - 70
SDR4K	♦SSI	255 -168
SDR4M	♦SSI	256 - 22
SDR4N	♦SSI	256 - 86
SDR047-01	♦SSI	257 - 14
SDR504	♦SSI	254 -170
SDR506	♦SSI	255 - 79
SDR508	♦SSI	255 -170
SDR510	♦SSI	256 - 23
SDR600	♦SSI	252 - 41
SDR601	♦SSI	253 - 6
SDR602	♦SSI	254 - 21
SDR603	♦SSI	254 -112
SDR604	♦SSI	254 -153
SDR605	♦SSI	255 - 27
SDR606	♦SSI	255 - 63
SDR622/59	♦SSI	254 - 22
SDR623/59	♦SSI	254 -113
SDR624/59	♦SSI	254 -154
SDR625/59	♦SSI	255 - 28
SDR803	♦SSI	253 -212
SDR804	♦SSI	253 - 35
SDR805	♦SSI	253 -216
SDR806	♦SSI	254 - 40
SDR807	♦SSI	254 -109
SDR900	♦SSI	252 - 42
SDR901	♦SSI	253 - 7
SDR902	♦SSI	254 - 23
SDR903	♦SSI	254 -114
SDR904	♦SSI	254 -155
SDR905	♦SSI	255 - 29
SDR933/61	♦SSI	254 -115
SDR934/61	♦SSI	254 -156
SDR935/61	♦SSI	255 - 30
SDR936/61	♦SSI	255 - 64
SDR943/61	♦SSI	254 -123
SDR944/61	♦SSI	254 -171
SDR945/61	♦SSI	255 - 39
SDR946/61	♦SSI	255 - 80
SDR1004	♦SSI	254 -172
SDR1006	♦SSI	255 - 81
SDR1008	♦SSI	255 -171
SDR1010	♦SSI	256 - 24
SDR1304	♦SSI	254 - 41
SDR1305	♦SSI	254 -169
SDR1306	♦SSI	255 - 78
SDR1308	♦SSI	255 -169
SDR3001	♦SOD	287 -166
SDR3002	♦SOD	287 -211
SDR3003	♦SOD	287 -218
SDR3004	♦SOD	288 - 53
SDR3005	♦SOD	288 - 55
SDR3007	♦SOD	276 -196
SDR3008	♦SOD	276 -208
SDR3009	♦SOD	277 - 19
SDR4001	♦SOD	290 - 19
SDR4002	♦SOD	290 - 23
SDR4003	♦SOD	290 - 24
SDR4004	♦SOD	290 - 33
SDR4005	♦SOD	290 - 35
SDR4007	♦SOD	281 - 7
SDR4008	♦SOD	281 - 40
SDR4009	♦SOD	281 -127
SDR5001	♦SOD	293 -202
SDR5002	♦SOD	293 -216
SDR5003	♦SOD	294 - 4
SDR5004	♦SOD	294 - 20
SDR5005	♦SOD	294 - 22
SDR5007	♦SOD	293 - 14
SDR5008	♦SOD	293 - 15
SDR5009	♦SOD	291 - 25
SDR6001	♦SOD	293 -203
SDR6002	♦SOD	293 -217
SDR6003	♦SOD	294 - 5
SDR6004	♦SOD	294 - 21
SDR6005	♦SOD	294 - 23
SDR6007	♦SOD	294 - 61
SDR6008	♦SOD	294 - 83
SDR6009	♦SOD	294 -106
SDR7001	♦SOD	302 -121
SDR7002	♦SOD	302 -132
SDR7003	♦SOD	302 -134
SDR7004	♦SOD	302 -147
SDR7005	♦SOD	302 -149
SDR7007	♦SOD	294 - 62
SDR7008	♦SOD	294 - 84
SDR7009	♦SOD	291 - 26
SDR8001	♦SOD	304 - 16
SDR8002	♦SOD	304 - 28
SDR8003	♦SOD	304 - 30
SDR8004	♦SOD	304 - 50
SDR8005	♦SOD	304 - 51
SDR8007	♦SOD	302 -179
SDR8008	♦SOD	302 -189
SDR8009	♦SOD	302 -212
SE114	♦HITJ	368 -113
SE114G1	♦HITJ	369 - 40
SE116G1	♦HITJ	369 - 41
SEA114W	♦HITJ	367 -210
SEA116BW	♦HITJ	369 - 42
SEA2601	♦SSI	252 - 64
SEA2602	♦SSI	252 -182
SEA2603	♦SSI	253 - 31
SEB114Y	♦HITJ	369 -158
SEB116BY	♦HITJ	370 -187
SEC114Y	♦HITJ	370 -188
SEC116BY	♦HITJ	371 -164
SER801	♦SSI	252 - 65
SER802	♦SSI	253 - 32
SER803	♦SSI	253 -213
SER804	♦SSI	254 - 35
SER1061	♦SSI	252 - 29
SER1061B	♦SSI	252 - 66
SER1061S	♦SSI	252 - 30
SER6050	♦SSI	252 - 48
SER6097	SSI	251 -192
SER6098	SSI	251 -214
SER6100	♦SSI	253 - 15
SER6150	♦SSI	253 -198
SER8050	♦SSI	252 - 49
SER8100	♦SSI	253 - 16
SER8150	♦SSI	253 -199
SER9050	♦SSI	252 - 7
SER9100	♦SSI	252 -192
SER9150	♦SSI	253 -159
SES5001	♦UNI	252 - 80
SES5002	♦UNI	253 - 45
SES5003	♦UNI	254 - 5
SES5301	♦UNI	252 - 81
SES5302	♦UNI	253 - 46
SES5303	♦UNI	254 - 6
SES5401	♦UNI	252 - 82
SES5401C	♦UNI	252 - 83
SES5402	♦UNI	253 - 47
SES5402C	♦UNI	253 - 48
SES5403	♦UNI	254 - 7
SES5403C	♦UNI	254 - 8
SES5404(M)	♦UNI	254 - 43
SES5404C(M)	♦UNI	254 - 44
SES5501(M)	♦UNI	252 - 84
SES5502(M)	♦UNI	253 - 49
SES5503(M)	♦UNI	254 - 9
SES5504(M)	♦UNI	254 - 45
SES5601C	♦UNI	252 - 85
SES5602C	♦UNI	253 - 50
SES5603C	♦UNI	254 - 10
SES5701	♦UNI	252 - 86
SES5702	♦UNI	253 - 51
SES5703	♦UNI	254 - 11
SES5801	♦UNI	252 - 87
SES5802	♦UNI	253 - 52
SES5803	♦UNI	254 - 12
SET010203	♦SET	403 - 89
SET010204	♦SET	296 -132
SET010211	♦SET	296 - 68
SET030603	♦SET	403 -154
SET030604	♦SET	300 -131
SET030611	♦SET	300 - 62
SET030803	♦SET	403 -155
SET030804	♦SET	300 -132
SET030811	♦SET	300 - 63
SET031003	♦SET	403 - 90
SET031004	♦SET	296 -144
SET031011	♦SET	296 - 69
SET040203	♦SET	403 -156
SET040204	♦SET	300 -121
SET040211	♦SET	300 - 64
SET061203	♦SET	403 -157
SET061204	♦SET	370 -193
SET061211	♦SET	370 -165
SET111403	♦SET	403 -192
SET111404	♦SET	371 -165
SET111411	♦SET	371 -162
SF1	♦DII	238 - 56
SF2	♦DII	238 - 80
SF3	♦DII	254 -134
SF4	♦DII	254 -195
SF5#B	CODI	241 -209
SF10	♦DII	256 - 58
SF10#B	CODI	242 - 50
SF11	♦DII	238 - 81
SF12	♦DII	238 -147
SF13	♦DII	239 - 2
SF14	♦DII	239 - 28
SF15	CODI	242 - 93
SF20	CODI	242 -118
SF21	♦DII	238 - 84
SF22	♦DII	238 -150
SF23	♦DII	239 - 5
SF24	♦DII	239 - 29
SF25	CODI	242 -129
SF31	♦DII	238 - 85
SF32	♦DII	238 -151
SF33	♦DII	239 - 6
SF34	♦DII	239 - 30
SF46	♦DII	238 - 61
SF51	♦DII	238 - 86
SF52	♦DII	238 -152
SF53	♦DII	239 - 7
SF54	♦DII	239 - 31
SF81	♦DII	238 - 87
SF82	♦DII	238 -153
SF83	♦DII	239 - 8
SF84	♦DII	239 - 32
SF151	♦DII	238 - 88
SF152	♦DII	238 -154
SF153	♦DII	239 - 9
SF154	♦DII	239 - 33
SF201	♦DII	238 - 89
SF202	♦DII	238 -155
SF203	♦DII	239 - 10
SF204	♦DII	239 - 34
SF0301	♦SSEI	238 -182
SF0302	♦SSEI	239 - 58
SF0304	♦SSEI	239 -164
SF0306	♦SSEI	240 - 36
SF0308	♦SSEI	240 - 74
SF0310	♦SSEI	240 -120
SF315	♦DII	238 - 62
SF330	♦DII	238 - 59
SF415	♦DII	238 - 63
SF425	♦DII	238 - 57
SF461	♦DII	238 - 94
SF462	♦DII	238 -161
SF515	♦DII	238 - 64
SF530	♦DII	238 - 60
SF0606	♦SSEI	240 - 37
SF0608	♦SSEI	240 - 75
SF0610	♦SSEI	240 -121
SF3301	♦DII	238 - 92
SF3302	♦DII	238 -158
SF3303	DII	239 - 13
SF4152	♦DII	238 -162
SF4251	♦DII	238 - 90
SF4252	♦DII	238 -156
SF4253	♦DII	239 - 11
SF5301	♦DII	238 - 93
SF5302	♦DII	238 -159
SF5303	♦DII	239 - 14
SF10001	♦SSEI	238 -208
SF10002	♦SSEI	239 - 95
SF10004	♦SSEI	239 -189
SF10006	♦SSEI	240 - 42
SF10008	♦SSEI	240 - 96
SF10010	♦SSEI	240 -139

Δ-Registered with JEDEC by this manufacturer

♦-Mfr's data sheet available in microfilm service

1. TYPE No. CROSS INDEX

IN TYPE NUMBER SEQUENCE

TYPE No.	MFRS	Pg&Line
SF10012	♦SSEI	240 -153
SF15001	♦SSEI	238 -209
SF15002	♦SSEI	239 - 96
SF15004	♦SSEI	239 -190
SF15006	♦SSEI	240 - 43
SF15008	♦SSEI	240 - 97
SF15010	♦SSEI	240 -140
SF15012	♦SSEI	240 -154
SF27501	♦SSEI	238 -210
SF27502	♦SSEI	239 - 97
SF27504	♦SSEI	239 -191
SF27506	♦SSEI	240 - 44
SF27508	♦SSEI	240 - 98
SF27510	♦SSEI	240 -141
SF27512	♦SSEI	240 -155
SF-1	SAKJ	442 - 74
SFC330	♦DII	238 - 58
SFC3301	♦DII	238 - 91
SFC3302	♦DII	238 -157
SFC3303	♦DII	239 - 12
SFD12	MISI	231 - 52
SFD037A	MISI	231 - 91
SFD103	MISI	231 - 81
SFD104	MISI	438 - 61
SFD105	MISI	245 - 21
SFD106	MISI	438 - 62
SFD107	MISI	232 -156
SFD108	MISI	233 - 8
SFD108A	MISI	233 -155
SFD111	MISI	231 - 83
SFD118A	MISI	244 - 87
SFD121	MISI	244 -119
SFD122	MISI	245 - 22
SFD129B	MISI	245 -119
SFD142	MISI	247 - 49
SFD143	MISI	246 - 52
SG5	SAKJ	297 -142
SG5AR	SAKJ	297 -174
SG5AS	SAKJ	297 -175
SG5BR	SAKJ	297 -202
SG5BS	SAKJ	297 -203
SG5FR	SAKJ	294 - 42
SG5L	SAKJ	298 -204
SG5T	SAKJ	300 - 89
SG6	SAKJ	297 -143
SG6AR	SAKJ	297 -176
SG6AS	SAKJ	297 -177
SG6BR	SAKJ	297 -204
SG6BS	SAKJ	297 -205
SG6LR	SAKJ	298 -205
SG6LS	SAKJ	298 -206
SG53R	SAKJ	302 - 71
SG53S	SAKJ	302 - 72
SG56R	SAKJ	302 - 92
SG56S	SAKJ	302 - 93
SG63R	SAKJ	303 -131
SG63S	SAKJ	303 -132
SG66R	SAKJ	303 -188
SG66S	SAKJ	303 -189
SG114G1	♦HITJ	369 - 65
SG116G1	♦HITJ	369 - 66
SG-5FS	SAKJ	294 - 43
SG-5T	SAKJ	300 - 81
SG-6FS	SAKJ	294 - 44
SGA2C	SAKJ	366 -201
SGA3C	SAKJ	366 -203
SGA5C	SAKJ	366 -205
SGA114W	♦HITJ	368 - 28
SGA116BW	♦HITJ	369 - 67
SGA-2	SAKJ	366 -202
SGA-4	♦SAKJ	366 -204
SGA-5	♦SAKJ	366 -206
SGB2C	SAKJ	368 -127
SGB4C	SAKJ	368 -147
SGB5C	SAKJ	368 -161
SGB8C	SAKJ	368 -177
SGB10UF	♦SSI	249 -154
SGB15UF	♦SSI	249 -159
SGB20UF	♦SSI	249 -173
SGB25UF	♦SSI	249 -186
SGB30UF	♦SSI	249 -199
SGB35UF	♦SSI	249 -210
SGB114Y	♦HITJ	369 -163
SGB116BY	♦HITJ	370 -206
SGB-2	♦SAKJ	368 -128
SGB-4	♦SAKJ	368 -148
SGB-5	♦SAKJ	368 -162
SGC114Y	♦HITJ	370 -207
SGC116BY	♦HITJ	371 -166
SGF-2	♦SAKJ	365 -178
SGF-4	♦SAKJ	365 -190
SGF-5	♦SAKJ	365 -201
SGI5001	♦GIC	286 - 1
SGI5002	♦GIC	286 - 36
SGI5003	♦GIC	286 - 42
SGI5004	♦GIC	286 - 77
SGI5301	♦GIC	290 -120
SGI5302	♦GIC	290 -146
SGI5303	♦GIC	290 -160
SGI5304	♦GIC	290 -183
SGI5401	♦GIC	293 - 69
SGI5401C	♦GIC	296 -185
SGI5402	♦GIC	293 - 80
SGI5402C	♦GIC	296 -197
SGI5403	♦GIC	293 - 84
SGI5403C	♦GIC	296 -205
SGI5404	♦GIC	293 - 93
SGI5404C	♦GIC	296 -213
SGI5601C	♦GIC	298 -112
SGI5602C	♦GIC	298 -141
SGI5603C	♦GIC	298 -167
SGI5604C	♦GIC	298 -183
SGM12	SAKJ	368 - 95
SGM12R	SAKJ	368 - 96
SGM12S	SAKJ	368 - 97
SGM52	SAKJ	369 - 10
SGM52R	SAKJ	369 - 11
SGM52S	SAKJ	369 - 12
SH100#B	♦SELI	238 - 39
SH101	♦SELI	238 - 40
SH110	♦SELI	238 - 72
SH111	♦SELI	238 - 73
SH120	♦SELI	238 -113
SH200	♦SELI	234 -208
SH200A	♦SELI	234 -209
SH202	♦SELI	234 -210
SH202A	♦SELI	234 -211
SH212	♦SELI	234 -212
SH212A	♦SELI	234 -213
SH222	♦SELI	234 -214
SH222A	♦SELI	234 -215
SH242	♦SELI	234 -216
SH242A	♦SELI	234 -217
SH252	♦SELI	234 -218
SH252A	♦SELI	234 -219
SH300	SELI	235 -119
SH300A	SELI	235 -120
SH301	SELI	235 -121
SH301A	SELI	235 -122
SH302	SELI	235 -123
SH302A	SELI	235 -124
SH-1	SAKJ	277 -146
SH-1A	SAKJ	277 -172
SH-1B	SAKJ	277 -192
SH-1C	SAKJ	401 -108
SH-1D	SAKJ	406 - 11
SH-1E	SAKJ	409 - 63
SHA394A	♦SSI	253 - 8
SHA394B	♦SSI	253 -191
SHA394C	♦SSI	254 - 24
SHA395A	♦SSI	252 -205
SHA395B	♦SSI	253 -173
SHA395C	♦SSI	254 - 16
SHA396A	♦SSI	254 - 19
SHA396B	♦SSI	254 -110
SHA396C	♦SSI	254 -151
SHA396D	♦SSI	255 - 26
SHA398A	♦SSI	253 - 9
SHA398B	♦SSI	253 -192
SHA398C	♦SSI	254 - 25
SHB15	♦SSI	248 - 38
SHB15F	♦SSI	248 - 35
SHB15UF	♦SSI	248 - 33
SHB20	♦SSI	248 - 44
SHB20F	♦SSI	248 - 41
SHB20UF	♦SSI	248 - 39
SHB25	♦SSI	248 - 50
SHB25F	♦SSI	248 - 47
SHB25UF	♦SSI	248 - 45
SHB30	♦SSI	248 - 56
SHB30F	♦SSI	248 - 53
SHB30UF	♦SSI	248 - 51
SHB40	♦SSI	248 - 61
SHB40F	♦SSI	248 - 58
SHB50	♦SSI	248 - 67
SHB50F	♦SSI	248 - 64
SHB50UF	♦SSI	248 - 62
SHB60	♦SSI	248 - 73
SHB60F	♦SSI	248 - 70
SHB60UF	♦SSI	248 - 68
SHB80	♦SSI	248 - 79
SHB80F	♦SSI	248 - 76
SHB80UF	♦SSI	248 - 74
SHB100	♦SSI	248 - 85
SHB100F	♦SSI	248 - 82
SHB100UF	♦SSI	248 - 80
SHCDA05	♦SEN	237 - 81
SHCDA05FR	♦SEN	271 -146
SHCDA05HE	♦SEN	272 - 58
SHCDA10	♦SEN	237 - 82
SHCDA10FR	♦SEN	271 -162
SHCDA10HE	♦SEN	272 - 70
SHCDA15HE	♦SEN	272 - 84
SHCDA20	♦SEN	237 - 83
SHCDA20FR	♦SEN	272 - 8
SHCDA40	♦SEN	237 - 84
SHCDA40FR	♦SEN	272 - 20
SHCDA60	♦SEN	237 - 85
SHCDA60FR	♦SEN	272 - 32
SHCDA80	♦SEN	237 - 96
SHCDA100	♦SEN	237 - 97
SHCNA05	♦SEN	237 - 86
SHCNA05FR	♦SEN	271 -147
SHCNA05HE	♦SEN	272 - 59
SHCNA10	♦SEN	237 - 87
SHCNA10FR	♦SEN	271 -163
SHCNA10HE	♦SEN	272 - 71
SHCNA15HE	♦SEN	272 - 85
SHCNA20	♦SEN	237 - 88
SHCNA20FR	♦SEN	272 - 9
SHCNA40	♦SEN	237 - 89
SHCNA40FR	♦SEN	272 - 21
SHCNA60	♦SEN	237 - 90
SHCNA60FR	♦SEN	272 - 33
SHCNA80	♦SEN	237 - 98
SHCNA100	♦SEN	237 - 99
SHCPA05	♦SEN	237 - 91
SHCPA05FR	♦SEN	271 -148
SHCPA05HE	♦SEN	272 - 60
SHCPA10	♦SEN	237 - 92
SHCPA10FR	♦SEN	271 -164
SHCPA10HE	♦SEN	272 - 72
SHCPA15HE	♦SEN	272 - 86
SHCPA20	♦SEN	237 - 93
SHCPA20FR	♦SEN	272 - 10
SHCPA40	♦SEN	237 - 94
SHCPA40FR	♦SEN	272 - 22
SHCPA60	♦SEN	237 - 95
SHCPA60FR	♦SEN	272 - 34
SHCPA80	♦SEN	237 -100
SHCPA100	♦SEN	237 -101
SHE10	♦SSI	256 - 78
SHE10F	♦SSI	256 - 30
SHE10UF	♦SSI	256 - 16
SHE15	♦SSI	256 -121
SHE15F	♦SSI	256 -110
SHE15UF	♦SSI	256 -106
SHE20	♦SSI	256 -148
SHE20F	♦SSI	256 -135
SHE20UF	♦SSI	256 -132
SHE25	♦SSI	256 -169
SHE25F	♦SSI	256 -159
SHE25UF	♦SSI	256 -152
SHE30	♦SSI	256 -186
SHE30F	♦SSI	256 -175
SHE30UF	♦SSI	256 -171
SHE40	♦SSI	256 -204
SHE40F	♦SSI	256 -196
SHE40UF	♦SSI	256 -192
SHE50	♦SSI	257 - 5
SHE50F	♦SSI	256 -213
SHE50UF	♦SSI	256 -207
SHE60	♦SSI	257 - 18
SHE60F	♦SSI	257 - 11
SHE60UF	♦SSI	257 - 8
SHE80	♦SSI	257 - 41
SHE80F	♦SSI	257 - 36
SHE80UF	♦SSI	257 - 32
SHE100	♦SSI	257 - 60
SHE100F	♦SSI	257 - 53
SHE100UF	♦SSI	257 - 47
SHF1102	♦SSI	254 - 29
SHF1103	♦SSI	254 -116
SHF1104	♦SSI	254 -157
SHF1105	♦SSI	255 - 31
SHF1106	♦SSI	255 - 65
SHF1302	♦SSI	254 - 30
SHF1303	♦SSI	254 -117
SHF1304	♦SSI	254 -158
SHF1305	♦SSI	255 - 32
SHF1306	♦SSI	255 - 66
SHG2	♦SSI	256 -149
SHG2F	♦SSI	256 -141
SHG3	♦SSI	256 -187
SHG3F	♦SSI	256 -178
SHG4	♦SSI	256 -205
SHG4F	♦SSI	256 -199
SHG5	♦SSI	257 - 6
SHG5F	♦SSI	256 -218
SHG6	♦SSI	257 - 19
SHG6F	♦SSI	257 - 15
SHM10	♦SSI	256 - 79
SHM10F	♦SSI	256 - 31
SHM10UF	♦SSI	256 - 17
SHM15	♦SSI	249 -171
SHM15F	♦SSI	249 -162
SHM15UF	♦SSI	249 -160
SHM20	♦SSI	249 -185
SHM20F	♦SSI	249 -176
SHM20UF	♦SSI	249 -174
SHM25	♦SSI	249 -198
SHM25F	♦SSI	249 -189
SHM25UF	♦SSI	249 -187
SHM30	♦SSI	249 -209
SHM30F	♦SSI	249 -202
SHM30UF	♦SSI	249 -200
SHM40	♦SSI	249 -220
SHM40F	♦SSI	249 -213
SHM40UF	♦SSI	249 -211
SHM50	♦SSI	250 - 11
SHM50F	♦SSI	250 - 3
SHM50UF	♦SSI	250 - 1
SHM60	♦SSI	250 - 20
SHM60F	♦SSI	250 - 14
SHM60UF	♦SSI	250 - 12
SHM80	♦SSI	250 - 29
SHM80F	♦SSI	250 - 25
SHM80UF	♦SSI	250 - 23
SHM100	♦SSI	250 - 38
SHM100F	♦SSI	250 - 32
SHM100UF	♦SSI	250 - 30
SHVM5	♦SET	423 -159
SHVM5F	♦SET	250 - 7
SHVM10	♦SET	427 -120
SHVM10F	♦SET	250 - 36
SHVM15	♦SET	429 - 91
SHVM15F	♦SET	250 - 45
SI1	♦SCN	283 -132
SI1A	MAL	286 - 29
	SCN	
SI2	♦SCN	283 -196
SI2A	MAL	286 - 70
	SCN	
SI3	♦SCN	284 - 43
SI3A	MAL	286 - 93
	SCN	
SI4	♦SCN	284 - 84
SI4A	MAL	286 -121
	SCN	
SI05	♦SCN	283 - 83
SI05A	MAL	285 -215
	SCN	
SI5	♦SCN	284 -147
SI5A	MAL	286 -142
	SCN	
SI6	♦SCN	284 -187
SI6A	MAL	286 -170
	SCN	
SI7	♦SCN	285 - 14
SI7A	MAL	277 - 55
SI8	♦SCN	285 - 48
SI8A	MAL	286 -205
	SCN	
SI9	♦SCN	285 - 82
SI10	♦SCN	402 - 50
SI10A	MAL	402 -119
	SCN	
SI12	♦SCN	406 - 83
SI12A	MAL	406 - 2
SI15	♦SCN	411 - 90
SIB01-01	FEC	280 - 47
SIB01-02	FEC	280 -135
SIB01-04	FEC	281 - 41
SIB01-06	FEC	281 -158
SIB01-10	FEC	401 -152
SICT5	♦SCN	353 - 16
SICT8	♦SCN	353 - 17
SICT10	♦SCN	353 - 18
SICT12	♦SCN	353 - 19
SICT15	♦SCN	353 - 20
SICT18	♦SCN	353 - 21
SICT22	♦SCN	353 - 22
SICT36	♦SCN	353 - 23
SICT45	♦SCN	353 - 24
SICTE5	♦SCN	353 - 25
SICTE8	♦SCN	353 - 26
SICTE12	♦SCN	353 - 27
SICTE15	♦SCN	353 - 28
SICTE18	♦SCN	353 - 29
SICTE22	♦SCN	353 - 30
SICTE36	♦SCN	353 - 31
SICTE45	♦SCN	353 - 32
SJ114G1	♦HITJ	369 - 89
SJ116G1	♦HITJ	369 - 90
SK3M3/13	♦SEKG	249 -158
SK3M3/15	♦SEKG	249 -172
SK4F4/02	♦SEKG	259 -151
SK4F4/04	♦SEKG	260 -110
SK4F4/06	♦SEKG	261 - 28
SK4F4/08	♦SEKG	261 - 93
SK4F4/10	♦SEKG	261 -143
SK4G4/02	♦SEKG	259 -152
SK4G4/04	♦SEKG	260 -111
SK4G4/06	♦SEKG	261 - 29
SK4G4/08	♦SEKG	261 - 94
SK4G4/10	♦SEKG	261 -144
SKB1.2-01	♦SEKG	361 - 86
SKB1.2-02	♦SEKG	361 - 97
SKB1.2-04	♦SEKG	361 -108
SKB1.2-08	♦SEKG	361 -115
SKB1.2-12	♦SEKG	361 -121
SKB2-02L5A	♦SEKG	362 -152
SKB2-04L5A	♦SEKG	364 - 34
SKB2-08L5A	♦SEKG	364 - 44
SKB2-12L5A	♦SEKG	364 - 51
SKB15-02A2	♦SEKG	365 -181
SKB15-04A2	♦SEKG	368 - 98
SKB15-08A2	♦SEKG	369 -131
SKB15-12A2	♦SEKG	369 -136
SKB15-16A2	♦SEKG	369 -139
SKB25-01	♦SEKG	365 - 3
SKB25-02	♦SEKG	367 -170
SKB25-04	♦SEKG	368 -191
SKB25-06	♦SEKG	369 -128
SKB25-08	♦SEKG	369 -132
SKB30-01S1	♦SEKG	366 -195
SKB30-02A1	♦SEKG	366 -196
SKB30-02S1	♦SEKG	366 -197
SKB30-04A1	♦SEKG	369 - 43
SKB30-04S1	♦SEKG	366 -198
SKB30-06S1	♦SEKG	366 -199
SKB30-08A1	♦SEKG	369 -169
SKB30-08S1	♦SEKG	366 -200
SKB30-12A1	♦SEKG	370 -147
SKB30-16A1	♦SEKG	370 -148
SKB50-02A3	♦SEKG	367 -171
SKB50-04A3	♦SEKG	369 -159
SKB50-08A3	♦SEKG	371 - 8
SKB50-12A3	♦SEKG	371 -167
SKB50-16A3	♦SEKG	371 -168
SKB60/04	♦SEKG	304 - 9
SKB60/08	♦SEKG	304 - 10
SKB60/12	♦SEKG	407 - 79
SKB60/16	♦SEKG	412 -171
SKBa1.2-13	♦SEKG	361 -122
SKBaB500-445-4		366 - 18
	♦SEKG	
SKBaB500C1000L5B		361 -123
	♦SEKG	
SKBaB500C1400		408 -194
	♦SEKG	
SKBaB500C3200-2200		
	♦SEKG	364 - 81
SKBB40C1000L5B		361 - 87
	♦SEKG	
SKBB40C1400	♦SEKG	362 -151
SKBB40C1500L5B		361 -178
	♦SEKG	
SKBB40C3200-2200		364 - 62
	♦SEKG	
SKBB40C3701-2201		364 - 63
	♦SEKG	
SKBB80-70-4	♦SEKG	365 -193
SKBB80C1000L5B		362 -154
	♦SEKG	
SKBB80C1400	♦SEKG	364 - 35
SKBB80C1500L5B		362 - 29
	♦SEKG	
SKBB80C3200-2200		364 - 73
	♦SEKG	
SKBB80C3701-2201		364 - 74
	♦SEKG	
SKBB250-220-4		366 - 9
	♦SEKG	
SKBB250C1000L5B		362 -155
	♦SEKG	
SKBB250C1400	♦SEKG	364 - 45
SKBB250C1500L5B		362 - 91
	♦SEKG	
SKBB250C3200-2200		
	♦SEKG	364 - 77
SKBB250C3701-2201		
	♦SEKG	364 - 78
SKBB500-445-4		366 - 17
	♦SEKG	
SKBB500C1000L5B		362 -153
	♦SEKG	
SKBB500C1400	♦SEKG	364 - 52
SKBB500C1500L5B		362 -125
	♦SEKG	
SKBB500C3200-2200		
	♦SEKG	364 - 82
SKD25-02	♦SEKG	372 -100
SKD25-04	♦SEKG	372 -143
SKD25-08	♦SEKG	372 -175
SKD25-12	♦SEKG	372 -208
SKD30-02A1	♦SEKG	372 -115
SKD30-04A1	♦SEKG	372 -116
SKD30-08A1	♦SEKG	372 -117
SKD30-12A1	♦SEKG	372 -118
SKD30-16A1	♦SEKG	372 -119
SKD50-02A3	♦SEKG	372 -134
SKD50-04A3	♦SEKG	372 -210
SKD50-08A3	♦SEKG	373 - 77
SKD50-12A3	♦SEKG	373 - 87
SKD50-16A3	♦SEKG	373 - 88
SKD60/04	♦SEKG	305 -160
SKD60/08	♦SEKG	305 -162
SKD60/12	♦SEKG	407 -119
SKD60/16	♦SEKG	412 -193
SKD100/04	♦SEKG	306 -198
SKD100/08	♦SEKG	306 -201
SKD100/12	♦SEKG	407 -171
SKD100/16	♦SEKG	413 - 1
SKDD20/02	♦SEKG	295 -205
SKDD20/04	♦SEKG	295 -209
SKDD20/06	♦SEKG	295 -213
SKDD20/08	♦SEKG	295 -217
SKDD20/10	♦SEKG	403 - 78
SKDD20/12	♦SEKG	406 -180
SKE1/01	♦SEKG	283 - 40
SKE1/04	♦SEKG	283 - 45
SKE1/08	♦SEKG	283 - 54
SKE1/12	♦SEKG	406 - 78
SKE1/16	♦SEKG	412 - 55
SKE2.5/01	♦SEKG	287 - 25
SKE2.5/04	♦SEKG	287 - 66
SKE2.5/08	♦SEKG	287 -121
SKE2.5/12	♦SEKG	406 -112
SKE2.5/16	♦SEKG	412 - 72
SKE4F1/01	♦SEKG	249 -146
SKE4F1/02	♦SEKG	249 -147
SKE4F1/04	♦SEKG	249 -149
SKE4F1/06	♦SEKG	249 -151
SKE4F1/08	♦SEKG	249 -153
SKE4F1/10	♦SEKG	249 -157
SKE4F2/01	♦SEKG	258 -140
SKE4F2/02	♦SEKG	259 -137
SKE4F2/04	♦SEKG	260 - 95
SKE4F2/06	♦SEKG	261 - 14
SKE4F2/08	♦SEKG	261 - 82
SKE4F2/10	♦SEKG	261 -132
SKE4G1/02	♦SEKG	249 -148
SKE4G1/04	♦SEKG	249 -150
SKE4G1/06	♦SEKG	249 -152
SKE4G2/02	♦SEKG	259 -138
SKE4G2/04	♦SEKG	260 - 96
SKE4G2/06	♦SEKG	261 - 15
SKEA1/13	♦SEKG	408 -189
SKEA1/17	♦SEKG	413 -145
SKEA2.5/13	♦SEKG	408 -198
SKEA2.5/17	♦SEKG	413 -148
SKHM7	♦SEKG	425 -207
SKID800/08	♦SEKG	312 - 27
SKID800/12	♦SEKG	408 -107
SKID800/14	♦SEKG	410 -141
SKID800/16	♦SEKG	413 - 85
SKKD15-02	SEKG	297 - 56
SKKD15-04	SEKG	297 - 58
SKKD15-06	SEKG	297 - 60
SKKD15-08	SEKG	297 - 62
SKKD15-12	SEKG	406 -193
SKKD15-14	SEKG	409 -117
SKKD15-16	SEKG	412 -109
SKKD46-04	SEKG	302 - 81
SKKD46-06	SEKG	302 - 91
SKKD46-08	SEKG	302 -102
SKKD46-12	SEKG	407 - 43
SKKD46-14	SEKG	409 -159
SKKD46-16	SEKG	412 -150
SKKD81-04	SEKG	305 - 47
SKKD81-06	SEKG	305 - 52
SKKD81-08	SEKG	305 - 55
SKKD81-12	SEKG	407 -106
SKKD81-14	SEKG	409 -198
SKKD81-16	SEKG	412 -184
SKKE15-02	SEKG	297 - 57
SKKE15-04	SEKG	297 - 59
SKKE15-06	SEKG	297 - 61
SKKE15-08	SEKG	297 - 63
SKKE15-12	SEKG	406 -194
SKKE15-14	SEKG	409 -118
SKKE15-16	SEKG	412 -110
SKKE81-04	SEKG	305 - 48
SKKE81-06	SEKG	305 - 53
SKKE81-08	SEKG	305 - 56
SKKE81-12	SEKG	407 -107
SKKE81-14	SEKG	409 -199

Δ-Registered with JEDEC by this manufacturer

♦-Mfr's data sheet available in microfilm service

1. TYPE No. CROSS INDEX

IN TYPE NUMBER SEQUENCE

TYPE No.	MFRS	Pg&Line
SKKE81-16	SEKG	412 -185
SKMD20/02	♦SEKG	295 -206
SKMD20/04	♦SEKG	295 -210
SKMD20/06	♦SEKG	295 -214
SKMD20/08	♦SEKG	295 -218
SKMD20/10	♦SEKG	403 - 79
SKMD20/12	♦SEKG	406 -181
SKN1M20/08	♦SEKG	261 - 96
SKN1M20/10	♦SEKG	261 -146
SKN1M20/12	♦SEKG	261 -161
SKN1M40/08	♦SEKG	261 - 97
SKN1M40/10	♦SEKG	261 -147
SKN1M40/12	♦SEKG	261 -162
SKN1M40/14	♦SEKG	261 -167
SKN2F17/04	♦SEKG	260 - 34
SKN2F17/06	♦SEKG	260 -161
SKN2F17/08	♦SEKG	261 - 49
SKN2F17/10	♦SEKG	261 -112
SKN2F50/04	♦SEKG	260 - 66
SKN2F50/06	♦SEKG	260 -197
SKN2F50/08	♦SEKG	261 - 58
SKN2F50/10	♦SEKG	261 -119
SKN2M100/04	♦SEKG	306 - 58
SKN2M100/06	♦SEKG	306 -108
SKN2M100/08	♦SEKG	306 -160
SKN2M100/10	♦SEKG	404 - 66
SKN2M100/12	♦SEKG	407 -152
SKN2M100/14	♦SEKG	410 - 6
SKN2M240/02	♦SEKG	309 - 48
SKN2M240/04	♦SEKG	309 - 59
SKN2M240/06	♦SEKG	309 - 70
SKN2M240/08	♦SEKG	309 - 80
SKN2M240/10	♦SEKG	404 -133
SKN2M240/12	♦SEKG	408 - 7
SKN2M400/08	♦SEKG	265 -105
SKN2M400/10	♦SEKG	265 -106
SKN2M400/12	♦SEKG	265 -107
SKN2M400/14	♦SEKG	265 -108
SKN2M400/15	♦SEKG	265 -109
SKN2.5/02	♦SEKG	287 - 38
SKN2.5/04	♦SEKG	287 - 67
SKN2.5/08	♦SEKG	287 -122
SKN2.5/12	♦SEKG	406 -113
SKN2.5/16	♦SEKG	412 - 73
SKN3F20/06	♦SEKG	260 -211
SKN3F20/08	♦SEKG	261 - 66
SKN3F20/10	♦SEKG	261 -123
SKN3F20/12	♦SEKG	261 -154
SKN4F20/02	♦SEKG	259 -139
SKN4F20/04	♦SEKG	260 - 97
SKN4F20/06	♦SEKG	261 - 16
SKN4F40/02	♦SEKG	259 -140
SKN4F40/04	♦SEKG	260 - 98
SKN4F40/06	♦SEKG	261 - 17
SKN4F40/08	♦SEKG	261 - 83
SKN4M600/12	♦SEKG	261 -163
SKN4M600/14	♦SEKG	261 -168
SKN4M600/16	♦SEKG	261 -171
SKN4M600/18	♦SEKG	261 -172
SKN4M600/20	♦SEKG	261 -175
SKN4M600/22	♦SEKG	261 -176
SKN4M600/24	♦SEKG	261 -177
SKN5/02	♦SEKG	290 -175
SKN5/04	♦SEKG	291 - 8
SKN5/08	♦SEKG	291 - 70
SKN5/12	♦SEKG	406 -139
SKN5/16	♦SEKG	412 - 89
SKN20/02	♦SEKG	298 -184
SKN20/04	♦SEKG	299 - 40
SKN20/08	♦SEKG	299 -156
SKN20/12	♦SEKG	406 -213
SKN20/14	♦SEKG	409 -131
SKN20/16	♦SEKG	412 -123
SKN26/02	♦SEKG	298 -208
SKN26/04	♦SEKG	299 - 61
SKN26/08	♦SEKG	299 -165
SKN26/12	♦SEKG	406 -218
SKN26/14	♦SEKG	409 -133
SKN26/16	♦SEKG	412 -125
SKN45/02	♦SEKG	302 -164
SKN45/04	♦SEKG	302 -200
SKN45/08	♦SEKG	303 - 23
SKN45/12	♦SEKG	407 - 51
SKN45/14	♦SEKG	409 -163
SKN45/16	♦SEKG	412 -151
SKN46/02	♦SEKG	302 -165
SKN46/04	♦SEKG	302 -201
SKN46/08	♦SEKG	303 - 24
SKN46/12	♦SEKG	407 - 52
SKN46/14	♦SEKG	409 -164
SKN46/16	♦SEKG	412 -152
SKN70/02	♦SEKG	305 -163
SKN70/04	♦SEKG	305 -167
SKN70/08	♦SEKG	305 -171
SKN70/12	♦SEKG	407 -120
SKN70/14	♦SEKG	409 -208
SKN70/16	♦SEKG	412 -194
SKN71/02	♦SEKG	305 -164
SKN71/04	♦SEKG	305 -168
SKN71/08	♦SEKG	305 -172
SKN71/12	♦SEKG	407 -121
SKN71/14	♦SEKG	409 -209
SKN71/16	♦SEKG	412 -195
SKN100/02	♦SEKG	306 -212
SKN100/04	♦SEKG	307 - 3
SKN100/08	♦SEKG	307 - 16
SKN100/12	♦SEKG	407 -174
SKN100/14	♦SEKG	410 - 23
SKN100/16	♦SEKG	413 - 2
SKN130/02	♦SEKG	308 -117
SKN130/04	♦SEKG	308 -119
SKN130/08	♦SEKG	308 -121
SKN130/12	♦SEKG	407 -209
SKN130/14	♦SEKG	410 - 39

TYPE No.	MFRS	Pg&Line
SKN130/16	♦SEKG	413 - 12
SKN240/02	♦SEKG	310 -123
SKN240/04	♦SEKG	310 -125
SKN240/08	♦SEKG	310 -132
SKN240/12	♦SEKG	408 - 48
SKN240/14	♦SEKG	410 - 83
SKN240/16	♦SEKG	413 - 43
SKN320/02	♦SEKG	311 - 59
SKN320/04	♦SEKG	311 - 61
SKN320/08	♦SEKG	311 - 62
SKN320/12	♦SEKG	408 - 73
SKN320/14	♦SEKG	410 -106
SKN320/16	♦SEKG	413 - 60
SKN400/18	♦SEKG	414 - 59
SKN400/24	♦SEKG	417 - 33
SKN400/27	♦SEKG	418 -121
SKN400/30	♦SEKG	419 -198
SKN500/02	♦SEKG	311 -203
SKN500/04	♦SEKG	311 -204
SKN500/08	♦SEKG	311 -208
SKN500/12	♦SEKG	408 -103
SKN500/14	♦SEKG	410 -137
SKN500/16	♦SEKG	413 - 81
SKN870/04	♦SEKG	312 - 50
SKN870/12	♦SEKG	408 -123
SKN870/16	♦SEKG	413 -101
SKN870/24	♦SEKG	417 - 59
SKN870/30	♦SEKG	420 - 1
SKN1500/04	♦SEKG	312 -194
SKN1500/12	♦SEKG	409 - 41
SKN1500/16	♦SEKG	413 -175
SKN1500/20	♦SEKG	416 - 50
SKN1500/29	♦SEKG	420 - 11
SKN2000/06	♦SEKG	313 - 4
SKN2000/12	♦SEKG	409 - 46
SKN2000/16	♦SEKG	413 -182
SKN2000/20	♦SEKG	416 - 56
SKN2000/24	♦SEKG	418 - 43
SKN4000/01	♦SEKG	313 -139
SKN4000/02	♦SEKG	313 -140
SKN4000/04	♦SEKG	313 -141
SKN4000/06	♦SEKG	313 -142
SKNA2/13	♦SEKG	408 -196
SKNA2/17	♦SEKG	413 -147
SKNA4/13	♦SEKG	408 -205
SKNA4/17	♦SEKG	413 -149
SKNA20/13	♦SEKG	408 -212
SKNA20/17	♦SEKG	413 -150
SKND20/02	♦SEKG	295 -207
SKND20/04	♦SEKG	295 -211
SKND20/06	♦SEKG	295 -215
SKND20/08	♦SEKG	295 -219
SKND20/10	♦SEKG	403 - 80
SKND20/12	♦SEKG	406 -182
SKR1M20/08	♦SEKG	298 - 2
SKR1M20/10	♦SEKG	403 -115
SKR1M20/12	♦SEKG	406 -200
SKR1M40/08	♦SEKG	303 - 22
SKR1M40/10	♦SEKG	403 -207
SKR1M40/12	♦SEKG	407 - 50
SKR1M40/14	♦SEKG	409 -162
SKR2F17/04	♦SEKG	260 - 35
SKR2F17/06	♦SEKG	260 -162
SKR2F17/08	♦SEKG	261 - 50
SKR2F17/10	♦SEKG	261 -113
SKR2F50/04	♦SEKG	260 - 67
SKR2F50/06	♦SEKG	260 -198
SKR2F50/08	♦SEKG	261 - 59
SKR2F50/10	♦SEKG	261 -120
SKR2M100/04	♦SEKG	306 - 59
SKR2M100/06	♦SEKG	306 -109
SKR2M100/08	♦SEKG	306 -161
SKR2M100/10	♦SEKG	404 - 67
SKR2M100/12	♦SEKG	407 -153
SKR2M100/14	♦SEKG	410 - 7
SKR2M240/02	♦SEKG	309 - 49
SKR2M240/04	♦SEKG	309 - 60
SKR2M240/06	♦SEKG	309 - 71
SKR2M240/08	♦SEKG	309 - 81
SKR2M240/10	♦SEKG	404 -134
SKR2M240/12	♦SEKG	408 - 8
SKR3F2/10	♦SEKG	261 -124
SKR3F2/12	♦SEKG	261 -155
SKR3F20/06	♦SEKG	260 -212
SKR3F20/08	♦SEKG	261 - 67
SKR3F20/10	♦SEKG	261 -125
SKR3F20/12	♦SEKG	261 -126
SKR4F20/02	♦SEKG	239 - 91
SKR4F20/04	♦SEKG	239 -185
SKR4F20/06	♦SEKG	240 - 38
SKR4F40/02	♦SEKG	239 - 92
SKR4F40/04	♦SEKG	239 -186
SKR4F40/06	♦SEKG	240 - 39
SKR4F40/08	♦SEKG	240 - 76
SKR20/02	SEKG	298 -185
SKR20/04	SEKG	299 - 41
SKR20/08	SEKG	299 -157
SKR20/12	SEKG	406 -214
SKR20/14	SEKG	409 -132
SKR20/16	SEKG	412 -124
SKR26/02	SEKG	297 -144
SKR26/04	SEKG	297 -179
SKR26/08	SEKG	298 - 5
SKR26/12	SEKG	406 -202
SKR26/14	SEKG	409 -121
SKR26/16	SEKG	412 -114
SKR45/02	♦SEKG	302 -166
SKR45/04	♦SEKG	302 -202
SKR45/08	♦SEKG	303 - 25
SKR45/12	♦SEKG	407 - 53
SKR45/14	♦SEKG	409 -165
SKR45/16	♦SEKG	412 -153
SKR46/02	♦SEKG	302 -167
SKR46/04	♦SEKG	302 -203

TYPE No.	MFRS	Pg&Line
SKR46/08	♦SEKG	303 - 26
SKR46/12	♦SEKG	407 - 54
SKR46/14	♦SEKG	409 -166
SKR46/16	♦SEKG	412 -154
SKR70/02	♦SEKG	305 -165
SKR70/04	♦SEKG	305 -169
SKR70/08	♦SEKG	305 -173
SKR70/12	♦SEKG	407 -122
SKR70/14	♦SEKG	409 -210
SKR70/16	♦SEKG	412 -196
SKR71/02	♦SEKG	305 -166
SKR71/04	♦SEKG	305 -170
SKR71/08	♦SEKG	305 -174
SKR71/12	♦SEKG	407 -123
SKR71/14	♦SEKG	409 -211
SKR71/16	♦SEKG	412 -197
SKR100/02	♦SEKG	306 -213
SKR100/04	♦SEKG	306 - 65
SKR100/08	♦SEKG	306 -170
SKR100/12	♦SEKG	407 -162
SKR100/14	♦SEKG	410 - 24
SKR100/16	♦SEKG	412 -216
SKR130/02	♦SEKG	308 -118
SKR130/04	♦SEKG	308 -120
SKR130/08	♦SEKG	308 -122
SKR130/12	♦SEKG	407 -210
SKR130/14	♦SEKG	410 - 40
SKR130/16	♦SEKG	413 - 13
SKR240/02	♦SEKG	310 -124
SKR240/04	♦SEKG	310 -126
SKR240/08	♦SEKG	310 -133
SKR240/12	♦SEKG	408 - 49
SKR240/14	♦SEKG	410 - 84
SKR240/16	♦SEKG	413 - 44
SKR320/02	♦SEKG	311 - 60
SKR320/04	♦SEKG	310 -127
SKR320/08	♦SEKG	310 -134
SKR320/12	♦SEKG	408 - 50
SKR320/14	♦SEKG	410 -107
SKR320/16	♦SEKG	413 - 47
SKS1/01	♦SEKG	283 - 60
SKS1/04	♦SEKG	283 - 63
SKS1/08	♦SEKG	283 - 66
SKS1/12	♦SEKG	406 - 81
SKS1/16	♦SEKG	412 - 57
SKSA1/13	♦SEKG	408 -190
SKSA1/17	♦SEKG	413 -146
SKV1/2B3000/2700-1.2	SEKG	425 -131
SKV1/2B6000/5400-0.5	SEKG	428 -214
SKVA14A150	♦SEKG	443 - 9
SKVA14A250	♦SEKG	443 - 10
SKVA14A420	♦SEKG	443 - 11
SKVA20B130	♦SEKG	443 - 12
SKVA20B250	♦SEKG	443 - 13
SKVA20B275	♦SEKG	443 - 14
SKVA20B420	♦SEKG	443 - 15
SKVA20B460	♦SEKG	443 - 16
SKVA20B510	♦SEKG	443 - 17
SKVA20B550	♦SEKG	443 - 18
SKVA20B1000	♦SEKG	443 - 19
SKWD1500/01	♦SEKG	312 -201
SKWD1500/02	♦SEKG	312 -204
SKWD1500/04	♦SEKG	312 -209
SKWD5000/01	♦SEKG	313 -170
SKWD5000/02	♦SEKG	313 -173
SKWD5000/04	♦SEKG	313 -178
SKWD5000/06	♦SEKG	313 -183
SKWD7000/02	♦SEKG	313 -198
SKWD7000/04	♦SEKG	313 -199
SKWD7000/06	♦SEKG	313 -200
SKXA75M	♦SEKG	433 -118
SKXA75N	♦SEKG	433 -119
SKXA100M	♦SEKG	433 -156
SKXA100N	♦SEKG	433 -157
SKXA125M	♦SEKG	433 -189
SKXA125N	♦SEKG	433 -190
SKXA150M	♦SEKG	433 -198
SKXA150N	♦SEKG	433 -199
SKXA75000	♦SEKG	433 -120
SL8	CODI	425 -219
SL10	CODI	427 - 22
SL15	CODI	429 - 24
SL20	CODI	430 -116
SL25	CODI	431 - 90
SL30	CODI	432 - 33
SL45	CODI	432 -216
SL1505HE	♦SEN	367 -125
SL1510FR	♦SEN	368 -122
SL1510HE	♦SEN	367 -158
SL1515HE	♦SEN	367 -160
SL1520	♦SEN	369 - 25
SL1520FR	♦SEN	368 -138
SL1540	♦SEN	368 - 99
SL1540FR	♦SEN	368 -158
SL1560	♦SEN	369 - 77
SL1560FR	♦SEN	368 -173
SL1580	♦SEN	369 - 98
SL6305HE	♦SEN	287 -171
SL6310HE	♦SEN	288 - 9
SL6315HE	♦SEN	288 - 57
SL6320	♦SEN	372 -120
SL6320FR	♦SEN	372 -112
SL6340	♦SEN	372 -121
SL6340FR	♦SEN	372 -113
SL6360	♦SEN	372 -122
SL6360FR	♦SEN	372 -114
SL6380	♦SEN	372 -123
SL15100	♦SEN	368 -100
SL15320	♦SEN	372 -164
SL15320FR	♦SEN	372 -165
SL15340	♦SEN	372 -171
SL15340FR	♦SEN	372 -172

TYPE No.	MFRS	Pg&Line
SL15360	♦SEN	372 -180
SL15360FR	♦SEN	372 -181
SL15380	♦SEN	372 -183
SL30305HE	♦SEN	372 -194
SL30310HE	♦SEN	372 -195
SL30315HE	♦SEN	372 -196
SL30320	♦SEN	373 - 37
SL30320FR	♦SEN	372 -212
SL30340	♦SEN	373 - 39
SL30340FR	♦SEN	372 -213
SL30360	♦SEN	373 - 42
SL30360FR	♦SEN	372 -214
SL30380	♦SEN	373 - 43
SL63100	♦SEN	366 - 19
SL303100	♦SEN	372 -211
SLC6.5	♦SCN	353 - 33
SLC6.5A	♦SCN	353 - 34
SLC7.0	♦SCN	353 - 35
SLC7.0A	♦SCN	353 - 36
SLC7.5	♦SCN	353 - 37
SLC7.5A	♦SCN	353 - 38
SLC8.0	♦SCN	353 - 39
SLC8.0A	♦SCN	353 - 40
SLC8.5	♦SCN	353 - 41
SLC8.5A	♦SCN	353 - 42
SLC9.0	♦SCN	353 - 43
SLC9.0A	♦SCN	353 - 44
SLC10	♦SCN	353 - 45
SLC10A	♦SCN	353 - 46
SLC11	♦SCN	353 - 47
SLC11A	♦SCN	353 - 48
SLC12	♦SCN	353 - 49
SLC12A	♦SCN	353 - 50
SLC13	♦SCN	353 - 51
SLC13A	♦SCN	353 - 52
SLC14	♦SCN	353 - 53
SLC14A	♦SCN	353 - 54
SLC15	♦SCN	353 - 55
SLC15A	♦SCN	353 - 56
SLC16	♦SCN	353 - 57
SLC16A	♦SCN	353 - 58
SLC17	♦SCN	353 - 59
SLC17A	♦SCN	353 - 60
SLC18	♦SCN	353 - 61
SLC18A	♦SCN	353 - 62
SLC20	♦SCN	353 - 63
SLC20A	♦SCN	353 - 64
SLC22	♦SCN	353 - 65
SLC22A	♦SCN	353 - 66
SLC24	♦SCN	353 - 67
SLC24A	♦SCN	353 - 68
SLC26	♦SCN	353 - 69
SLC26A	♦SCN	353 - 70
SLC28	♦SCN	353 - 71
SLC28A	♦SCN	353 - 72
SLC30	♦SCN	353 - 73
SLC30A	♦SCN	353 - 74
SLC33	♦SCN	353 - 75
SLC33A	♦SCN	353 - 76
SLC36	♦SCN	353 - 77
SLC36A	♦SCN	353 - 78
SLC40	♦SCN	353 - 79
SLC40A	♦SCN	353 - 80
SLC43	♦SCN	353 - 81
SLC43A	♦SCN	353 - 82
SLC45	♦SCN	353 - 83
SLC45A	♦SCN	353 - 84
SLC48	♦SCN	353 - 85
SLC48A	♦SCN	353 - 86
SLC51	♦SCN	353 - 87
SLC51A	♦SCN	353 - 88
SLC54	♦SCN	353 - 89
SLC54A	♦SCN	353 - 90
SLC58	♦SCN	353 - 91
SLC58A	♦SCN	353 - 92
SLC60	♦SCN	353 - 93
SLC60A	♦SCN	353 - 94
SLC64	♦SCN	353 - 95
SLC64A	♦SCN	353 - 96
SLC70	♦SCN	353 - 97
SLC70A	♦SCN	353 - 98
SLC75	♦SCN	353 - 99
SLC75A	♦SCN	353 -100
SLC80	♦SCN	353 -101
SLC80A	♦SCN	353 -102
SLC90	♦SCN	353 -103
SLC90A	♦SCN	353 -104
SLC100	♦SCN	353 -105
SLC100A	♦SCN	353 -106
SLC110	♦SCN	353 -107
SLC110A	♦SCN	353 -108
SLC120	♦SCN	353 -109
SLC120A	♦SCN	353 -110
SLC130	♦SCN	354 - 1
SLC130A	♦SCN	354 - 2
SLC150	♦SCN	354 - 3
SLC150A	♦SCN	354 - 4
SLC160	♦SCN	354 - 5
SLC160A	♦SCN	354 - 6
SLC170	♦SCN	354 - 7
SLC170A	♦SCN	354 - 8
SLCE6.5	♦SCN	354 - 9
SLCE6.5A	♦SCN	354 - 10
SLCE7.0	♦SCN	354 - 11
SLCE7.0A	♦SCN	354 - 12
SLCE7.5	♦SCN	354 - 13
SLCE7.5A	♦SCN	354 - 14
SLCE8.0	♦SCN	354 - 15
SLCE8.0A	♦SCN	354 - 16
SLCE8.5	♦SCN	354 - 17
SLCE8.5A	♦SCN	354 - 18
SLCE9.0	♦SCN	354 - 19
SLCE9.0A	♦SCN	354 - 20
SLCE10	♦SCN	354 - 21

TYPE No.	MFRS	Pg&Line
SLCE10A	♦SCN	354 - 22
SLCE11	♦SCN	354 - 23
SLCE11A	♦SCN	354 - 24
SLCE12	♦SCN	354 - 25
SLCE12A	♦SCN	354 - 26
SLCE13	♦SCN	354 - 27
SLCE13A	♦SCN	354 - 28
SLCE14	♦SCN	354 - 29
SLCE14A	♦SCN	354 - 30
SLCE15	♦SCN	354 - 31
SLCE15A	♦SCN	354 - 32
SLCE16	♦SCN	354 - 33
SLCE16A	♦SCN	354 - 34
SLCE17	♦SCN	354 - 35
SLCE17A	♦SCN	354 - 36
SLCE18	♦SCN	354 - 37
SLCE18A	♦SCN	354 - 38
SLCE20	♦SCN	354 - 39
SLCE20A	♦SCN	354 - 40
SLCE22	♦SCN	354 - 41
SLCE22A	♦SCN	354 - 42
SLCE24	♦SCN	354 - 43
SLCE24A	♦SCN	354 - 44
SLCE26	♦SCN	354 - 45
SLCE26A	♦SCN	354 - 46
SLCE28	♦SCN	354 - 47
SLCE28A	♦SCN	354 - 48
SLCE30	♦SCN	354 - 49
SLCE30A	♦SCN	354 - 50
SLCE33	♦SCN	354 - 51
SLCE33A	♦SCN	354 - 52
SLCE36	♦SCN	354 - 53
SLCE36A	♦SCN	354 - 54
SLCE40	♦SCN	354 - 55
SLCE40A	♦SCN	354 - 56
SLCE43	♦SCN	354 - 57
SLCE43A	♦SCN	354 - 58
SLCE45	♦SCN	354 - 59
SLCE45A	♦SCN	354 - 60
SLCE48	♦SCN	354 - 61
SLCE48A	♦SCN	354 - 62
SLCE51	♦SCN	354 - 63
SLCE51A	♦SCN	354 - 64
SLCE54	♦SCN	354 - 65
SLCE54A	♦SCN	354 - 66
SLCE58	♦SCN	354 - 67
SLCE58A	♦SCN	354 - 68
SLCE60	♦SCN	354 - 69
SLCE60A	♦SCN	354 - 70
SLCE64	♦SCN	354 - 71
SLCE64A	♦SCN	354 - 72
SLCE70	♦SCN	354 - 73
SLCE70A	♦SCN	354 - 74
SLCE75	♦SCN	354 - 75
SLCE75A	♦SCN	354 - 76
SLCE80	♦SCN	354 - 77
SLCE80A	♦SCN	354 - 78
SLCE90	♦SCN	354 - 79
SLCE90A	♦SCN	354 - 80
SLCE100	♦SCN	354 - 81
SLCE100A	♦SCN	354 - 82
SLCE110	♦SCN	354 - 83
SLCE110A	♦SCN	354 - 84
SLCE120	♦SCN	354 - 85
SLCE120A	♦SCN	354 - 86
SLCE130	♦SCN	354 - 87
SLCE130A	♦SCN	354 - 88
SLCE150	♦SCN	354 - 89
SLCE150A	♦SCN	354 - 90
SLCE160	♦SCN	354 - 91
SLCE160A	♦SCN	354 - 92
SLCE170	♦SCN	354 - 93
SLCE170A	♦SCN	354 - 94
SLD1	♦SOD	412 - 51
SLD1U	♦SOD	401 -131
SLD1V	♦SOD	401 -138
SLD1.2S	♦SOD	406 - 1
SLD1.5S	♦SOD	411 - 46
SLD1.5TS	♦SOD	411 - 47
SLD1.5U	♦SOD	411 - 53
SLD1.5V	♦SOD	411 - 48
SLD1.6S	♦SOD	412 - 23
SLD1.8T	♦SOD	413 -205
SLD1.8TS	♦SOD	413 -206
SLD2	♦SOD	415 - 56
SLD2S	♦SOD	415 - 21
SLD2U	♦SOD	415 - 27
SLD2V	♦SOD	415 - 22
SLD2.4S	♦SOD	417 - 1
SLD2.4T	♦SOD	417 - 2
SLD2.4TS	♦SOD	417 - 3
SLD2.4V	♦SOD	417 - 4
SLD2.8S	♦SOD	418 -161
SLD3	♦SOD	419 -139
SLD3U	♦SOD	419 -111
SLD3V	♦SOD	419 - 97
SLD3.6T	♦SOD	421 - 10
SLD3.6TS	♦SOD	421 - 11
SLD4	SOD	421 -220
SLD4V	♦SOD	421 -183
SLD4VS	♦SOD	421 -170
SLD4.8T	♦SOD	423 - 25
SLD4.8TS	♦SOD	423 - 26
SLD5	♦SOD	423 -194
SLD5U	♦SOD	423 -136
SLD6	SOD	424 -214
SLD6T	♦SOD	424 -169
SLD6V	♦SOD	424 -180
SLD6VS	♦SOD	424 -170
SLD7	SOD	425 - 99
SLD7.2T	♦SOD	425 -127
SLD7.2TS	♦SOD	425 -128
SLD8	SOD	426 - 88
SLD8T	♦SOD	426 - 39

Δ-Registered with JEDEC by this manufacturer

♦-Mfr's data sheet available in microfilm service

1. TYPE No. CROSS INDEX

IN TYPE NUMBER SEQUENCE

TYPE No.	MFRS	Pg&Line
SLD8V	♦SOD	426 - 40
SLD9	SOD	426 -177
SLD10	SOD	427 -145
SLD10V	♦SOD	427 - 87
SLD10VS	♦SOD	427 - 76
SLD11	SOD	428 - 19
SLD12	♦SOD	428 -124
SLD12T	♦SOD	428 - 84
SLD12U	♦SOD	428 - 75
SLD14T	♦SOD	428 -206
SLD14U	♦SOD	428 -201
SLD15	SOD	429 -111
SLD16T	♦SOD	429 -202
SLD16U	♦SOD	429 -197
SLD18U	♦SOD	430 - 54
SLD20	♦SOD	430 -179
SLD20U	♦SOD	430 -142
SLD22U	♦SOD	431 - 22
SLD24U	♦SOD	431 - 55
SLD25	SOD	431 -143
SLD26U	♦SOD	431 -183
SLD28U	♦SOD	431 -212
SLD30	♦SOD	432 - 75
SLD30U	♦SOD	432 - 49
SLD35	SOD	432 -130
SLD40	SOD	432 -184
SLD45	SOD	433 - 14
SLD50	SOD	433 - 60
SLD75	SOD	429 - 84
SLD100	SOD	433 -137
SLD120	SOD	433 -164
SLDHV1	SOD	412 - 20
SLDHV2	SOD	415 - 28
SLDHV3	SOD	419 -112
SLDHV4	SOD	421 -195
SLDHV5	SOD	423 -137
SLDHV6	SOD	424 -185
SLDHV7	SOD	425 - 83
SLDHV8	SOD	426 - 55
SLDHV9	SOD	426 -165
SLDHV10	SOD	427 - 90
SLDHV15	SOD	429 - 66
SLDHV20	SOD	430 -156
SLDHV25	SOD	431 -119
SLDHV30	SOD	432 - 60
SLDHV35	SOD	432 -125
SLDHV40	SOD	432 -173
SLDHV45	SOD	433 - 5
SLDHV50	SOD	433 - 51
SLDHV75	SOD	433 - 90
SLDHV100	SOD	433 -128
SLDHV120	SOD	433 -158
SLDV	♦SOD	279 -113
SLD.8S	♦SOD	279 -126
SLF8	CODI	242 - 27
SLF10	CODI	242 - 51
SLF15	CODI	242 - 94
SLF20	CODI	242 -119
SLF25	CODI	242 -130
SLF30	CODI	242 -138
SLF40	CODI	242 -147
SLF45	CODI	242 -151
SM01PCN013	WESB	263 - 91
SM01PCN026	WESB	263 - 92
SM01PCN046	WESB	263 -167
SM01PCN076	WESB	263 -168
SM1-02	ORIJ	280 -156
SM1-02FR	ORIJ	250 -155
SM1-04FR	ORIJ	250 -189
SM1-08	ORIJ	282 - 48
SM1-08FR	ORIJ	251 - 14
SM1-10FR	ORIJ	251 - 20
SM1-12	ORIJ	406 - 50
SM1A01Z	ORIJ	280 - 67
SM1A02FR	ORIJ	250 -156
SM1A04FR	ORIJ	250 -190
SM1A04Z	ORIJ	281 - 62
SM1A06	ORIJ	281 -178
SM1A06FR	ORIJ	250 -218
SM1A08	ORIJ	282 - 49
SM1A08FR	ORIJ	251 - 10
SM1A10	ORIJ	401 -175
SM1A10FR	ORIJ	251 - 18
SM1A12	ORIJ	406 - 51
SM1A12FR	ORIJ	251 - 22
SM1.5-02	ORIJ	283 -203
SM1.5-02FR	ORIJ	250 -157
SM1.5-04	ORIJ	284 - 90
SM1.5-04FR	ORIJ	250 -191
SM1.5-08	ORIJ	285 - 54
SM1.5-08FR	ORIJ	251 - 15
SM1.5-10	ORIJ	402 - 57
SM1.5-10FR	ORIJ	251 - 21
SM02CXC170	WESB	265 -182
SM02CXC220	♦WESB	267 -151
SM02CXC724	♦WESB	268 - 82
SM02PCN013	♦WESB	263 - 94
SM02PCN024	♦WESB	263 - 96
SM02PCN026	WESB	263 - 95
SM02PCN046	WESB	263 -173
SM02PCN074	WESB	263 -175
SM02PCN076	♦WESB	263 -174
SM02PHN170	WESB	265 -183
SM3-02	ORIJ	288 - 84
SM3-02FR	ORIJ	250 -158
SM3-04	ORIJ	288 -182
SM3-04FR	ORIJ	250 -192
SM3-06	ORIJ	289 - 47
SM3-06FR	ORIJ	250 -219
SM04CXC170	WESB	266 - 1
SM04CXC220	♦WESB	267 -159
SM04CXC724	♦WESB	268 - 83
SM04PCN013	WESB	263 -101
SM04PCN024	♦WESB	263 -103

TYPE No.	MFRS	Pg&Line
SM04PCN026	WESB	263 -102
SM04PCN046	WESB	263 -181
SM04PCN074	WESB	263 -183
SM04PCN076	WESB	263 -182
SM04PHN170	WESB	266 - 2
SM05-16FR	ORIJ	251 - 33
SM05A16FR	ORIJ	251 - 31
SM06CXC170	WESB	266 - 3
SM06CXC220	♦WESB	268 - 3
SM06CXC724	♦WESB	268 - 84
SM06PCN024	♦WESB	263 -106
SM06PCN074	WESB	263 -196
SM06PHN170	WESB	266 - 4
SM08CXC170	♦WESB	266 - 6
SM08CXC220	WESB	268 - 11
SM08CXC724	♦WESB	268 - 85
SM08PCN024	♦WESB	263 -109
SM08PCN074	WESB	263 -199
SM08PHN170	WESB	266 - 5
SM8	CODI	426 - 26
SM10#C	CODI	427 - 52
SM10CXC170	♦WESB	266 - 8
SM10CXC220	WESB	268 - 19
SM10CXC724	♦WESB	268 - 86
SM10PCN024	♦WESB	263 -113
SM10PCN074	WESB	263 -201
SM10PHN170	WESB	266 - 7
SM12CXC170	WESB	266 - 9
SM12CXC174	WESB	266 - 10
SM12CXC220	WESB	268 - 27
SM12CXC724	♦WESB	268 - 87
SM12PHN174	♦WESB	266 - 11
SM14CXC174	WESB	266 - 12
SM14CXC220	WESB	268 - 34
SM14CXC224	WESB	268 - 37
SM14CXC724	♦WESB	268 - 88
SM14PHN174	WESB	266 - 13
SM15	CODI	429 - 39
SM16CXC174	WESB	266 - 14
SM16CXC220	WESB	268 - 42
SM16CXC224	WESB	268 - 47
SM16CXC724	♦WESB	268 - 89
SM16CXC924	♦WESB	268 - 90
SM16PHN174	WESB	266 - 15
SM18CXC174	WESB	266 - 16
SM18CXC224	WESB	268 - 54
SM18CXC724	♦WESB	268 - 92
SM18CXC924	♦WESB	268 - 93
SM18PHN174	WESB	266 - 17
SM20#C	CODI	430 -131
SM20CXC174	WESB	266 - 18
SM20CXC224	WESB	268 - 61
SM20CXC924	♦WESB	268 - 96
SM20PHN174	WESB	266 - 19
SM21CXC224	WESB	268 - 64
SM22CXC924	♦WESB	268 -104
SM24CXC924	♦WESB	268 -114
SM25	CODI	431 -103
SM25CXC924	♦WESB	268 -120
SM30	♦SET	278 -111
SM30#C	CODI	432 - 43
SM40	♦SET	421 -219
SM45	CODI	433 - 2
SM50	♦SET	423 -193
SM75	♦SET	425 -183
SM100	♦SET	427 -152
SM205A	SELI	236 - 35
SM210A	SELI	236 - 36
SM215A	SELI	236 - 37
SM4001	♦DII	279 -219
SM4002	♦DII	280 - 59
SM4003	♦DII	280 -147
SM4004	♦DII	281 - 55
SM4005	♦DII	281 -172
SM4006	♦DII	282 - 44
SM4007	♦DII	401 -170
SM4933	♦DII	257 -178
SM4934	♦DII	258 -100
SM4935	♦DII	259 - 99
SM4936	♦DII	260 - 68
SM4937	♦DII	260 -199
SM-1-01Z	ORIJ	280 - 77
SM-1-02FRA	ORIJ	241 - 81
SM-1-02Z	ORIJ	280 -171
SM-1-04FRA	ORIJ	241 - 90
SM-1-04Z	ORIJ	281 - 77
SM-1-06FRA	ORIJ	241 - 99
SM-1-08FRA	ORIJ	241 -107
SM-1-10FRA	ORIJ	241 -125
SM-1A-01Z	ORIJ	280 - 68
SM-1A-02	ORIJ	280 -172
SM-1A-02FR	ORIJ	250 -139
SM-1A-02Z	ORIJ	280 -157
SM-1A-04	ORIJ	281 - 78
SM-1A-04FR	ORIJ	250 -193
SM-1A-04Z	ORIJ	281 - 63
SM-1A-06	ORIJ	281 -194
SM-1A-06FR	ORIJ	250 -220
SM-1A-08	ORIJ	282 - 50
SM-1A-08FR	ORIJ	251 - 11
SM-1A-10	ORIJ	401 -176
SM-1A-10FR	ORIJ	251 - 19
SM-1A-12	ORIJ	406 - 52
SM-1A-12FR	ORIJ	251 - 23
SM-3-02	ORIJ	288 - 85
SM-3-02FR	ORIJ	250 -159
SM-3-04	ORIJ	288 -183
SM-3-04FR	ORIJ	250 -194
SM-3-06	ORIJ	289 - 48
SM-3-06FR	ORIJ	251 - 1
SM-05A-16FR	ORIJ	251 - 32
SMB01	ORIJ	280 - 78
SMB02	ORIJ	280 -173
SMB04	ORIJ	281 - 79

TYPE No.	MFRS	Pg&Line
SMB08	ORIJ	282 - 59
SMB10	ORIJ	401 -186
SN113	♦SEKG	412 - 45
SNR-7A75K	SAKJ	440 - 87
SNR-7A95K	SAKJ	440 - 88
SNR-7A115K	SAKJ	440 - 89
SNR-7A130K	SAKJ	440 - 90
SNR-7A150K	SAKJ	440 - 91
SNR-7A175K	SAKJ	440 - 92
SNR-7A250K	SAKJ	440 - 93
SNR-7A275K	SAKJ	440 - 94
SNR-7A300K	SAKJ	440 - 95
SNR-7D18L	SAKJ	440 - 96
SNR-7D22L	SAKJ	440 - 97
SNR-7D24L	SAKJ	440 - 98
SNR-7D27L	SAKJ	440 - 99
SNR-7D33K	SAKJ	440 -100
SNR-7D39K	SAKJ	440 -101
SNR-7D47K	SAKJ	440 -102
SNR-7D56K	SAKJ	440 -103
SNR-7D68K	SAKJ	440 -104
SNR-7D82K	SAKJ	440 -105
SNR-7D100K	SAKJ	440 -106
SNR-14A75K	SAKJ	440 -107
SNR-14A95K	SAKJ	440 -108
SNR-14A115K	SAKJ	440 -109
SNR-14A130K	SAKJ	440 -110
SNR-14A150K	SAKJ	441 - 1
SNR-14A175K	SAKJ	441 - 2
SNR-14A250K	SAKJ	441 - 3
SNR-14A275K	SAKJ	441 - 4
SNR-14A300K	SAKJ	441 - 5
SNR-14A320K	SAKJ	441 - 6
SNR-14A420K	SAKJ	441 - 7
SNR-14A460K	SAKJ	441 - 8
SNR-14A480K	SAKJ	441 - 9
SNR-14A510K	SAKJ	441 - 10
SNR-14A550K	SAKJ	441 - 11
SNR-14A575K	SAKJ	441 - 12
SNR-14D18L	SAKJ	441 - 13
SNR-14D22L	SAKJ	441 - 14
SNR-14D24L	SAKJ	441 - 15
SNR-14D27L	SAKJ	441 - 16
SNR-14D33K	SAKJ	441 - 17
SNR-14D39K	SAKJ	441 - 18
SNR-14D47K	SAKJ	441 - 19
SNR-14D56K	SAKJ	441 - 20
SNR-14D68K	SAKJ	441 - 21
SNR-14D82K	SAKJ	441 - 22
SNR-14D100K	SAKJ	441 - 23
SNR-20A130K	SAKJ	441 - 24
SNR-20A150K	SAKJ	441 - 25
SNR-20A175K	SAKJ	441 - 26
SNR-20A250K	SAKJ	441 - 27
SNR-20A275K	SAKJ	441 - 28
SNR-20A300K	SAKJ	441 - 29
SNR-20A320K	SAKJ	441 - 30
SNR-20A420K	SAKJ	441 - 31
SNR-20A460K	SAKJ	441 - 32
SNR-20A480K	SAKJ	441 - 33
SNR-20A510K	SAKJ	441 - 34
SNR-20A550K	SAKJ	441 - 35
SNR-20A575K	SAKJ	441 - 36
SNR-A95L8	♦SAKJ	358 - 85
SNR-A130L2	♦SAKJ	358 - 86
SNR-A130L10	♦SAKJ	358 - 87
SNR-A130L20	♦SAKJ	358 - 88
SNR-A150L2	♦SAKJ	358 - 89
SNR-A150L10	♦SAKJ	358 - 90
SNR-A150L20	♦SAKJ	358 - 91
SNR-A250L4	♦SAKJ	358 - 92
SNR-A250L20	♦SAKJ	358 - 93
SNR-A250L40	♦SAKJ	358 - 94
SNR-A275L4	♦SAKJ	358 - 95
SNR-A275L20	♦SAKJ	358 - 96
SNR-A275L40	♦SAKJ	358 - 97
SNR-A300L4	♦SAKJ	358 - 98
SNR-A320L20	♦SAKJ	358 - 99
SNR-A320L40	♦SAKJ	358 -100
SNR-A420L20	♦SAKJ	358 -101
SNR-A420L40	♦SAKJ	358 -102
SNR-A460L20	♦SAKJ	358 -103
SNR-A460L40	♦SAKJ	358 -104
SNR-A480L40	♦SAKJ	358 -105
SNR-A480L80	♦SAKJ	358 - 84
SNR-A510L40	♦SAKJ	358 -106
SNR-A510L80	♦SAKJ	358 -107
SNR-A550L40	♦SAKJ	358 -108
SNR-A550L80	♦SAKJ	358 -109
SNR-A575L40	♦SAKJ	358 -110
SNR-A575L80	♦SAKJ	359 - 1
SNR-A1000L80	♦SAKJ	359 - 2
SNR-A1000L160		359 - 3
	♦SAKJ	
SNR-D18M1	♦SAKJ	359 - 4
SNR-D18M3	♦SAKJ	359 - 5
SNR-D22L1	♦SAKJ	359 - 6
SNR-D22L3	♦SAKJ	359 - 7
SNR-D24K1	♦SAKJ	359 - 8
SNR-D24K4	♦SAKJ	359 - 9
SNR-D27L1	♦SAKJ	359 - 10
SNR-D27L4	♦SAKJ	359 - 11
SNR-D33K1	♦SAKJ	359 - 12
SNR-D33K5	♦SAKJ	359 - 13
SNR-D39K1	♦SAKJ	359 - 14
SNR-D39K6	♦SAKJ	359 - 15
SNR-D47K1	♦SAKJ	359 - 16
SNR-D47K7	♦SAKJ	359 - 17
SNR-D56K2	♦SAKJ	359 - 18
SNR-D56K8	♦SAKJ	359 - 19
SNR-D68K2	♦SAKJ	359 - 20
SNR-D68K10	♦SAKJ	359 - 21
SNR-D82K2	♦SAKJ	359 - 22
SNR-D82K12	♦SAKJ	359 - 23

TYPE No.	MFRS	Pg&Line
SNR-D100K3	♦SAKJ	359 - 24
SNR-D100K15	♦SAKJ	359 - 25
SNR-D120K1	♦SAKJ	359 - 26
SNR-D120K6	♦SAKJ	359 - 27
SNR-D150K1	♦SAKJ	359 - 28
SNR-D150K8	♦SAKJ	359 - 29
SNR-D180K1	♦SAKJ	359 - 30
SNR-D180K10	♦SAKJ	359 - 31
SODSLD1	SOD	412 - 77
SODSLD2	SOD	415 - 76
SODSLD3	SOD	419 -159
SODSLD3FS	SOD	256 -179
SODSLD4	SOD	422 - 22
SODSLD4FS	SOD	256 -200
SODSLD5	♦SOD	424 - 19
SODSLD5FS	♦SOD	256 -219
SODSLD6	♦SOD	425 - 9
SODSLD6FS	♦SOD	257 - 16
SODSLD7	♦SOD	425 -111
SODSLD7FS	♦SOD	257 - 22
SODSLD8	♦SOD	426 -106
SODSLD8FS	♦SOD	257 - 38
SODSLD9	♦SOD	426 -185
SODSLD9FS	♦SOD	257 - 44
SODSLD10	♦SOD	427 -186
SODSLD10FS	♦SOD	257 - 56
SODSLD11	♦SOD	428 - 21
SODSLD12	♦SOD	428 -145
SODSLD15	♦SOD	429 -146
SODSLD15FS	♦SOD	257 - 70
SODSLD20	♦SOD	430 -194
SODSLD20FS	♦SOD	257 - 74
SODSLD25	♦SOD	431 -163
SODSLD25FS	♦SOD	257 - 76
SODSLD30	♦SOD	432 - 90
SODSLD30FS	♦SOD	257 - 78
SODSLD35	♦SOD	432 -139
SODSLD35FS	♦SOD	257 - 79
SODSLD40	♦SOD	432 -197
SODSLD40FS	♦SOD	257 - 80
SODSLD45	♦SOD	433 - 23
SODSLD45FS	♦SOD	257 - 81
SODSLD50	♦SOD	433 - 72
SODSLD50FS	♦SOD	257 - 82
SODSLD75	SOD	433 -107
SODSLD100	SOD	433 -146
SODSLD120	SOD	433 -173
SODSPC1	SOD	412 - 94
SODSPC2	SOD	415 -106
SODSPC3	SOD	419 -178
SODSPC4	SOD	422 - 36
SODSPC5	SOD	424 - 42
SODSPC6	SOD	425 - 15
SODSPC7	SOD	425 -117
SODSPC8	SOD	426 -112
SODSPC9	SOD	426 -189
SODSPC10	SOD	427 -195
SODSPC15	SOD	429 -152
SODSPC20	SOD	430 -203
SODSPC25	SOD	431 -168
SODSPC30	SOD	432 - 97
SODSPC35	SOD	432 -144
SODSPC40	SOD	432 -203
SODSPC45	SOD	433 - 28
SODSPC50	SOD	433 - 76
SODSPC75	SOD	433 -111
SODSPC100	SOD	433 -150
SODSPC120	SOD	433 -177
SODSPF16	♦SOD	412 - 95
SODSPF20	♦SOD	415 -107
SODSPF30	♦SOD	419 -179
SODSPF40	♦SOD	422 - 37
SODSPF50	♦SOD	424 - 43
SODSPF60	♦SOD	425 - 16
SODSPF70	♦SOD	425 -118
SODSPF80	♦SOD	426 -113
SODSPF90	♦SOD	426 -190
SODSPF100	♦SOD	427 -196
SODSPF150	♦SOD	429 -153
SODSPF200	♦SOD	430 -205
SODSPF250	♦SOD	431 -169
SODSPF300	♦SOD	432 - 98
SODSPF350	♦SOD	432 -145
SODSPF400	♦SOD	432 -204
SODSPF450	♦SOD	433 - 29
SODSPF500	♦SOD	433 - 77
SODSPF750	♦SOD	433 -112
SODSPF1000	♦SOD	433 -151
SODSPF1200	♦SOD	433 -178
SODSPS16	♦SOD	412 -112
SODSPS20	♦SOD	415 -122
SODSPS30	♦SOD	419 -188
SODSPS40	♦SOD	422 - 43
SODSPS50	♦SOD	424 - 50
SODSPS60	♦SOD	425 - 27
SODSPS70	♦SOD	425 -123
SODSPS80	♦SOD	426 -121
SODSPS90	♦SOD	426 -197
SODSPS100	♦SOD	427 -211
SODSPS150	♦SOD	429 -165
SODSPS200	♦SOD	430 -213
SODSPS250	♦SOD	431 -177
SODSPS300	♦SOD	432 -106
SODSPS350	♦SOD	432 -150
SODSPS400	♦SOD	432 -209
SODSPS450	♦SOD	433 - 34
SODSPS500	♦SOD	433 - 82
SODSPS750	♦SOD	433 -116
SODSPS1000	♦SOD	433 -155
SODSPS1200	♦SOD	433 -182
SODTPF16	♦SOD	412 - 98
SODTPF20	♦SOD	415 -109
SODTPF30	♦SOD	419 -182
SODTPF40	♦SOD	422 - 39

TYPE No.	MFRS	Pg&Line
SODTPF50	♦SOD	424 - 45
SODTPF60	♦SOD	425 - 21
SODTPF70	♦SOD	425 -120
SODTPF80	♦SOD	426 -117
SODTPF90	♦SOD	426 -194
SODTPF100	♦SOD	427 -206
SODTPF150	♦SOD	429 -160
SODTPF200	♦SOD	430 -210
SODTPF250	♦SOD	431 -174
SODTPF300	♦SOD	432 -102
SODTPF350	♦SOD	432 -147
SODTPF400	♦SOD	432 -206
SODTPF450	♦SOD	433 - 31
SODTPF500	♦SOD	433 - 80
SODTPF750	♦SOD	433 -114
SODTPF1000	♦SOD	433 -153
SODTPF1200	♦SOD	433 -180
SODTPH16	♦SOD	412 - 99
SODTPH20	♦SOD	415 -110
SODTPH30	♦SOD	419 -183
SODTPH40	♦SOD	422 - 40
SODTPH50	♦SOD	424 - 46
SODTPH60	♦SOD	425 - 22
SODTPH70	♦SOD	425 -121
SODTPH80	♦SOD	426 -118
SODTPH90	♦SOD	426 -195
SODTPH100	♦SOD	427 -207
SODTPH150	♦SOD	429 -161
SODTPH200	♦SOD	430 -211
SODTPH250	♦SOD	431 -175
SODTPH300	♦SOD	432 -103
SODTPH350	♦SOD	432 -148
SODTPH400	♦SOD	432 -207
SODTPH450	♦SOD	433 - 32
SODTPH500	♦SOD	433 - 81
SODTPH750	♦SOD	433 -115
SODTPH1000	♦SOD	433 -154
SODTPH1200	♦SOD	433 -161
SP5	CODI	423 - 72
SP5F	CODI	241 -210
SP6	CODI	424 -125
SP6F	CODI	242 - 4
SP7	CODI	425 - 62
SP7F	CODI	242 - 15
SP8	CODI	426 - 5
SP8F	CODI	242 - 28
SP9	CODI	426 -154
SP9F	CODI	242 - 34
SP10	CODI	427 - 29
SP10F	CODI	242 - 52
SP11	CODI	428 - 2
SP11F	CODI	242 - 60
SP12	CODI	428 - 49
SP12F	CODI	242 - 75
SP13	CODI	428 -161
SP15	CODI	429 -167
SP20	CODI	430 -214
SP25	CODI	431 -178
SP25F	♦VMI	417 -138
SP50F	♦VMI	423 -160
SP50S	♦VMI	423 -161
SP75F	♦VMI	425 -163
SP75S	♦VMI	425 -164
SP100F	♦VMI	427 -121
SP100S	♦VMI	427 -122
SP125F	♦VMI	428 -111
SP125S	♦VMI	428 -112
SP150F	♦VMI	429 - 92
SP150S	♦VMI	429 - 93
SP200F	♦VMI	430 -173
SP200S	♦VMI	430 -174
SP250F	♦VMI	431 -136
SP250S	♦VMI	431 -137
SPA25(M)	♦UNI	272 -183
SPB25(M)	♦UNI	272 -186
SPC1	SOD	412 - 69
SPC2	SOD	415 - 69
SPC3	SOD	419 -151
SPC4	SOD	422 - 13
SPC5	SOD	424 - 2
SPC6	SOD	425 - 6
SPC7	SOD	425 -107
SPC8	SOD	426 - 99
SPC9	SOD	426 -182
SPC10	SOD	427 -174
SPC15	SOD	429 -133
SPC20	SOD	430 -188
SPC25	SOD	431 -155
SPC25#B(M)	♦UNI	272 -187
SPC30	SOD	432 - 85
SPC35	SOD	432 -134
SPC40	SOD	432 -191
SPC45	SOD	433 - 19
SPC50	SOD	433 - 67
SPC75	SOD	433 -100
SPC100	SOD	433 -141
SPC120	SOD	433 -168
SPCHV1	SOD	412 - 43
SPCHV2	SOD	415 - 49
SPCHV3	SOD	419 -131
SPCHV4	SOD	421 -212
SPCHV5	SOD	423 -165
SPCHV6	SOD	424 -205
SPCHV7	SOD	425 - 93
SPCHV8	SOD	426 - 75
SPCHV9	SOD	426 -171
SPCHV10	SOD	427 -129
SPCHV15	SOD	429 - 85
SPCHV20	SOD	430 -167
SPCHV25	SOD	431 -129
SPCHV30	SOD	432 - 69
SPCHV35	SOD	432 -126
SPCHV40	SOD	432 -178
SPCHV45	SOD	433 - 10

Δ-Registered with JEDEC by this manufacturer

♦-Mfr's data sheet available in microfilm service

1. TYPE No. CROSS INDEX

IN TYPE NUMBER SEQUENCE

TYPE No.	MFRS	Pg&Line
SPCHV50	SOD	433 - 55
SPCHV75	SOD	433 - 92
SPCHV100	SOD	433 -130
SPCHV120	SOD	433 -159
SPD1F	SSI	258 - 73
SPD2F	SSI	259 - 69
SPD4F	SSI	260 - 36
SPD05F	♦SSI	257 -158
SPD6F	♦SSI	260 -163
SPD25(M)	♦UNI	272 -188
SPD546A	♦SSI	254 -108
SPD547A	♦SSI	255 - 25
SPD548A	♦SSI	255 -148
SPD549A	♦SSI	256 - 6
SPD550A	♦SSI	256 - 80
SPD605	♦SOD	257 -179
SPD605T	♦SOD	257 -180
SPD610	♦SOD	258 -101
SPD610T	♦SOD	258 -102
SPD620	♦SOD	259 -100
	♦SSI	
SPD620T	♦SOD	259 -101
SPD630	♦SOD	259 -201
	♦SSI	
SPD630T	♦SOD	259 -202
SPD1205	♦SOD	257 -181
SPD1205T	♦SOD	257 -182
SPD1210	♦SOD	258 -103
SPD1210T	♦SOD	258 -104
SPD1220	♦SOD	259 -102
SPD1220T	♦SOD	259 -103
SPD1230	♦SOD	259 -203
SPD1230T	♦SOD	259 -204
SPD2005	♦SOD	257 -193
SPD2005T	♦SOD	262 - 23
SPD2010	♦SOD	258 -126
SPD2010T	♦SOD	262 - 24
SPD2020	♦SOD	262 - 25
SPD2020T	♦SOD	262 - 26
SPD2030	♦SOD	262 - 27
SPD2030T	♦SOD	262 - 28
SPD5063	♦SSI	256 - 81
SPD5191	♦SSI	272 - 44
SPD5192	♦SSI	272 - 54
SPD5628	♦SSI	256 - 82
SPD5817	♦SSI	251 -160
SPD5818	♦SSI	251 -177
SPD5819	♦SSI	251 -199
SPD9000	♦SSI	290 -144
SPD9001	♦SSI	290 -180
SPD9002	♦SSI	291 - 11
SPD9003	♦SSI	291 - 50
SPD9004	♦SSI	291 - 73
SPD9005	♦SSI	402 -210
SPDA6205	♦SOD	272 - 69
SPDA6210	♦SOD	272 - 83
SPDA6220	♦SOD	272 -103
SPDA6230	♦SOD	272 -108
SPDA12205	♦SOD	257 -183
SPDA12210	♦SOD	258 -105
SPDA12220	♦SOD	259 -104
SPDA12230	♦SOD	259 -205
SPDA20205	♦SOD	272 - 68
SPDA20210	♦SOD	272 - 79
SPDA20220	♦SOD	272 - 99
SPDA20230	♦SOD	272 -104
SPF16	♦SOD	412 - 70
SPF20	♦SOD	415 - 70
SPF30	♦SOD	419 -152
SPF40	♦SOD	422 - 14
SPF50	♦SOD	423 -216
SPF60	♦SOD	425 - 7
SPF70	♦SOD	425 -108
SPF80	♦SOD	426 -100
SPF90	♦SOD	426 -183
SPF100	♦SOD	427 -175
SPF150	♦SOD	429 -134
SPF200	♦SOD	430 -189
SPF250	♦SOD	431 -156
SPF300	♦SOD	432 - 86
SPF350	♦SOD	432 -135
SPF400	♦SOD	432 -192
SPF450	♦SOD	433 - 20
SPF500	♦SOD	433 - 68
SPF750	♦SOD	433 -101
SPF1000	♦SOD	433 -142
SPF1200	♦SOD	433 -169
SPFHV16	♦SOD	412 - 44
SPFHV20	♦SOD	415 - 50
SPFHV30	♦SOD	419 -132
SPFHV40	♦SOD	421 -213
SPFHV50	♦SOD	423 -176
SPFHV60	♦SOD	424 -206
SPFHV70	♦SOD	425 - 94
SPFHV80	♦SOD	426 - 76
SPFHV90	♦SOD	426 -172
SPFHV100	♦SOD	427 -130
SPFHV150	♦SOD	429 - 99
SPFHV200	♦SOD	430 -168
SPFHV250	♦SOD	431 -130
SPFHV300	♦SOD	432 - 70
SPFHV350	♦SOD	432 -127
SPFHV400	♦SOD	432 -179
SPFHV450	♦SOD	433 - 11
SPFHV500	♦SOD	433 - 56
SPFHV750	♦SOD	433 - 93
SPFHV1000	♦SOD	433 -131
SPFHV1200	♦SOD	433 -160
SPIP8.4	♦SCN	328 - 61
SPIP24	♦SCN	328 - 62
SPIP30	♦SCN	328 - 63
SPIP60	♦SCN	328 - 64
SPIP120	♦SCN	328 - 65
SPIP208	♦SCN	328 - 66

TYPE No.	MFRS	Pg&Line
SPIP250	♦SCN	328 - 67
SPIP440	♦SCN	328 - 68
SPIP500	♦SCN	328 - 69
SPS16	♦SOD	412 - 97
SPS20	♦SOD	415 -108
SPS30	♦SOD	419 -181
SPS40	♦SOD	422 - 38
SPS50	♦SOD	424 - 44
SPS60	♦SOD	425 - 20
SPS70	♦SOD	425 -119
SPS80	♦SOD	426 -116
SPS90	♦SOD	426 -193
SPS100	♦SOD	427 -205
SPS150	♦SOD	429 -156
SPS200	♦SOD	430 -204
SPS250	♦SOD	431 -170
SPS300	♦SOD	432 - 99
SPS350	♦SOD	432 -146
SPS400	♦SOD	432 -205
SPS450	♦SOD	433 - 30
SPS500	♦SOD	433 - 78
SPS750	♦SOD	433 -110
SPS1000	♦SOD	433 -147
SPS1200	♦SOD	433 -176
SPSHV16	♦SOD	412 - 76
SPSHV20	♦SOD	415 - 75
SPSHV30	♦SOD	419 -155
SPSHV40	♦SOD	422 - 18
SPSHV50	♦SOD	423 -212
SPSHV60	♦SOD	425 - 4
SPSHV70	♦SOD	425 -106
SPSHV80	♦SOD	426 - 98
SPSHV90	♦SOD	426 -181
SPSHV100	♦SOD	427 -172
SPSHV150	♦SOD	429 -127
SPSHV200	♦SOD	430 -190
SPSHV250	♦SOD	431 -157
SPSHV300	♦SOD	432 - 87
SPSHV350	♦SOD	432 -136
SPSHV400	♦SOD	432 -186
SPSHV450	♦SOD	433 - 16
SPSHV500	♦SOD	433 - 62
SPSHV750	♦SOD	433 - 97
SPSHV1000	♦SOD	433 -138
SPSHV1200	♦SOD	433 -165
SR1FM2	MITJ	279 - 71
SR1FM4	MITJ	279 - 81
SR1FM8	MITJ	279 - 97
SR1FM12	MITJ	279 -109
SR1G4	♦MITJ	283 - 42
SR1G8	♦MITJ	283 - 46
SR1G12	♦MITJ	283 - 50
SR1G16	♦MITJ	283 - 55
SR10A8	MITJ	295 - 79
SR10A10	MITJ	295 -100
SR10A12	MITJ	295 -127
SR10A16	MITJ	295 -163
SR10A20	MITJ	403 - 65
SR10A24	MITJ	406 -177
SR10C2S	MITJ	262 - 54
SR10C4S	MITJ	262 - 64
SR10C8S	MITJ	262 - 79
SR10L1S	MITJ	294 -183
SR10L2S	MITJ	294 -213
SR10L4S	MITJ	295 - 27
SR10L6S	MITJ	295 - 53
SR10L8S	MITJ	295 - 80
SR10L10S	MITJ	295 -101
SR15D	♦DII	374 -164
SR15F	♦DII	374 -169
SR15H	♦DII	374 -179
SR25B2S	MITJ	298 -148
SR25B4S	MITJ	298 -207
SR25B6S	MITJ	299 - 17
SR25B8S	MITJ	299 - 60
SR25B10S	MITJ	299 - 91
SR30D-8R	MITJ	301 -183
SR30D-8S	MITJ	301 -185
SR30D-16R	MITJ	302 - 27
SR30D-16S	MITJ	302 - 31
SR30D-24R	MITJ	407 - 31
SR30D-24S	MITJ	407 - 32
SR60L-2R	MITJ	303 - 90
SR60L-2S	MITJ	303 - 91
SR60L-4R	MITJ	303 -109
SR60L-4S	MITJ	303 -110
SR60L-6R	MITJ	303 -127
SR60L-6S	MITJ	303 -128
SR60L-8R	MITJ	303 -155
SR60L-8S	MITJ	303 -156
SR60L-10R	MITJ	303 -169
SR60L-10S	MITJ	303 -170
SR65D	♦DII	375 - 84
SR65F	♦DII	375 - 85
SR65H	♦DII	375 - 87
SR65K	♦DII	375 - 89
SR75D	♦DII	375 - 97
SR75F	♦DII	375 - 99
SR75H	♦DII	375 -102
SR75K	♦DII	375 -106
SR100AM10	MITJ	306 - 80
SR100AM12	MITJ	306 -112
SR100AM16	MITJ	306 -165
SR100AM20	MITJ	404 - 70
SR100AM24	MITJ	407 -156
SR100AM28	MITJ	410 - 10
SR100AM32	MITJ	412 -211
SR100AM36	MITJ	414 - 21
SR100AM40	MITJ	415 -130
SR102	♦DII	374 - 27
	♦RECT	
SR103	♦DII	374 - 34
	♦RECT	

TYPE No.	MFRS	Pg&Line
SR104	♦DII	374 - 42
	♦RECT	
SR105	♦DII	374 - 48
	♦RECT	
SR106	♦DII	374 - 53
	♦RECT	
SR108	♦DII	374 - 56
SR130L-2R	MITJ	307 - 21
SR130L-2S	MITJ	307 - 22
SR130L-4R	MITJ	307 - 24
SR130L-4S	MITJ	307 - 25
SR130L-6R	MITJ	307 - 26
SR130L-6S	MITJ	307 - 27
SR130L-8R	MITJ	307 - 31
SR130L-8S	MITJ	307 - 32
SR130L-10R	MITJ	307 - 33
SR130L-10S	MITJ	307 - 34
SR170L-2R	MITJ	308 -123
SR170L-2S	MITJ	308 -124
SR170L-4R	MITJ	308 -125
SR170L-4S	MITJ	308 -126
SR170L-6R	MITJ	308 -127
SR170L-6S	MITJ	308 -128
SR170L-8R	MITJ	308 -130
SR170L-8S	MITJ	308 -131
SR170L-10R	MITJ	308 -132
SR170L-10S	MITJ	308 -133
SR200DL12R	MITJ	309 - 72
SR200DL16R	MITJ	309 - 83
SR200DL20R	MITJ	404 -137
SR200DL24R	MITJ	408 - 11
SR200DL-12S	MITJ	309 - 73
SR200DL-16S	MITJ	309 - 84
SR200DL-20S	MITJ	404 -138
SR200DL-24S	MITJ	408 - 12
SR200DM28R	MITJ	410 - 56
SR200DM32R	MITJ	413 - 27
SR200DM36R	MITJ	414 - 32
SR200DM40R	MITJ	415 -141
SR200DM-28S	MITJ	410 - 57
SR200DM-32S	MITJ	413 - 28
SR200DM-36S	MITJ	414 - 33
SR200DM-40S	MITJ	415 -142
SR200L-4R	MITJ	308 -162
SR200L-6R	MITJ	308 -171
SR200L-8R	MITJ	308 -182
SR200L-10R	MITJ	308 -191
SR201	SELI	275 - 25
SR202	SELI	275 - 26
SR203	SELI	275 - 29
SR204	SELI	275 - 30
SR250L-2R	MITJ	309 - 96
SR250L-2S	MITJ	309 - 97
SR250L-4R	MITJ	309 -116
SR250L-4S	MITJ	309 -117
SR250L-6R	MITJ	309 -137
SR250L-6S	MITJ	309 -138
SR250L-8R	MITJ	309 -155
SR250L-8S	MITJ	309 -156
SR250L-10R	MITJ	309 -176
SR250L-10S	MITJ	309 -177
SR302	♦DII	374 - 69
	♦RECT	
SR303	♦DII	374 - 73
	♦RECT	
SR304	♦DII	374 - 78
	♦RECT	
SR305	♦DII	374 - 83
	♦RECT	
SR306	♦DII	374 - 86
	♦RECT	
SR0308	♦SSEI	289 -110
SR308	♦DII	374 - 90
SR0310	♦SSEI	402 -149
SR0312	♦SSEI	406 -116
SR0314	♦SSEI	409 - 90
SR400EL-10	MITJ	311 - 15
SR400EL-12	MITJ	311 - 30
SR400EL-16	MITJ	311 - 51
SR400EL-20	MITJ	404 -189
SR400EL-24	MITJ	408 - 69
SR400FH-28	MITJ	410 - 93
SR400FH-32	MITJ	413 - 54
SR400FH-36	MITJ	414 - 58
SR400FH-40	MITJ	415 -158
SR400FH-50	MITJ	417 -214
SR400FH-60	MITJ	419 -197
SR400FV-70	MITJ	420 -198
SR400FV-80	MITJ	422 - 60
SR502	♦DII	374 -103
	♦RECT	
SR503	♦DII	374 -106
	♦RECT	
SR504	♦DII	374 -110
	♦RECT	
SR505	♦DII	374 -114
	♦RECT	
SR506	♦DII	374 -117
	♦RECT	
SR508	♦DII	374 -120
SR0608	♦SSEI	292 -153
SR710	♦SCN	296 - 30
SR710F	♦SCN	296 - 31
SR711	♦SCN	296 - 46
SR711F	♦SCN	296 - 47
SR712	♦SCN	257 -209
SR712F	♦SCN	296 - 79
SR713	♦SCN	296 -102
SR713F	♦SCN	296 -103
SR714	♦SCN	296 -117
SR714F	♦SCN	296 -118
SR716	♦SCN	296 -152
SR716F	♦SCN	296 -153

TYPE No.	MFRS	Pg&Line
SR802	♦DII	374 -127
	♦RECT	
SR803	♦DII	374 -131
	♦RECT	
SR804	♦DII	374 -134
	♦RECT	
SR805	♦DII	374 -138
	♦RECT	
SR806	♦DII	374 -139
	♦RECT	
SR808	♦DII	374 -140
SR1002	♦DII	374 -141
	♦RECT	
SR1003	♦DII	374 -143
	♦RECT	
SR1004	♦DII	374 -146
	♦RECT	
SR1005	♦DII	374 -149
	♦RECT	
SR1006	♦DII	374 -151
	♦RECT	
SR1212	♦SSEI	406 -175
SR1214	♦SSEI	401 - 1
SR1214A	♦SSEI	409 -113
SR1602	♦DII	374 -189
	♦RECT	
SR1603	♦DII	374 -195
	♦RECT	
SR1604	♦DII	374 -201
	♦RECT	
SR1605	♦DII	374 -207
	♦RECT	
SR1606	♦DII	374 -209
	♦RECT	
SR1612	♦SSEI	406 -185
SR1614	♦SSEI	409 -114
SR2508	♦SSEI	299 -149
SR2510	♦SSEI	403 -125
SR2512	♦SSEI	406 -212
SR2514	♦SSEI	409 -128
SR3512	♦SSEI	407 - 17
SR3514	♦SSEI	409 -146
SR4008	♦SSEI	302 - 19
SR4010	♦SSEI	403 -174
SR4012	♦SSEI	407 - 28
SR4014	♦SSEI	409 -151
SR5005	♦DII	302 -131
	♦SCN	
SR5010	♦SCN	302 -146
SR5020	♦SCN	302 -176
SR5030	♦SCN	302 -186
SR5040	♦SCN	302 -211
SR6000	♦SSEI	303 - 72
SR6001	♦SSEI	303 - 82
SR6002	♦SSEI	303 -102
SR6004	♦SSEI	303 -141
SR6006	♦SSEI	303 -177
SR6008	♦SSEI	303 -197
SR6010	♦SSEI	403 -213
SR6012	♦SSEI	407 - 63
SR6014	♦SSEI	409 -170
SR7000	♦SSEI	304 - 17
SR7001	♦SSEI	304 - 31
SR7002	♦SSEI	304 - 59
SR7004	♦SSEI	304 -104
SR7006	♦SSEI	304 -143
SR7008	♦SSEI	304 -177
SR7010	♦SSEI	404 - 4
SR7012	♦SSEI	407 - 82
SR7014	♦SSEI	409 -185
SR15001	♦SSEI	307 - 54
SR15002	♦SSEI	307 - 83
SR15003	♦SSEI	307 -120
SR15004	♦SSEI	307 -147
SR15006	♦SSEI	307 -195
SR15008	♦SSEI	308 - 20
SR15010	♦SSEI	308 - 57
SR20001	♦SSEI	308 -156
SR20002	♦SSEI	308 -158
SR20003	♦SSEI	308 -170
SR20004	♦SSEI	308 -173
SR20006	♦SSEI	308 -192
SR20008	♦SSEI	308 -210
SR20010	♦SSEI	309 - 4
SR20012	♦SSEI	309 - 5
SR-2	SAKJ	354 - 95
SR-4	SAKJ	354 - 96
SRB2	ORIJ	354 - 97
SRB4	ORIJ	354 - 98
SRB0705	♦SSEI	315 - 20
SRB0710	♦SSEI	315 - 21
SRB0720	♦SSEI	315 - 22
SRB0740	♦SSEI	315 - 23
SRB0760	♦SSEI	315 - 24
SRB0780	♦SSEI	315 - 25
SRB1505	♦SSEI	315 - 27
SRB1510	♦SSEI	315 - 28
SRB1520	♦SSEI	315 - 29
SRB1540	♦SSEI	315 - 30
SRB1560	♦SSEI	315 - 31
SRB1580	♦SSEI	315 - 32
SRB3005	♦SSEI	315 - 34
SRB3010	♦SSEI	315 - 35
SRB3020	♦SSEI	315 - 36
SRB3040	♦SSEI	315 - 37
SRB3060	♦SSEI	315 - 38
SRB3080	♦SSEI	315 - 39
SRB07100	♦SSEI	315 - 26
SRB15100	♦SSEI	315 - 33
SRB30100	♦SSEI	315 - 40
SRB-2	ORIJ	354 - 99
SRB-4	ORIJ	354 -100
SRF2	ORIJ	354 -101
SRF4	ORIJ	354 -102

TYPE No.	MFRS	Pg&Line
SRF-2	ORIJ	354 -103
SRF-4	ORIJ	354 -104
SRM10A	♦SSEI	367 -127
SRM10B	♦SSEI	367 -162
SRM10D	♦SSEI	367 -204
SRM10F	♦SSEI	367 - 99
SRM10M	♦SSEI	368 - 24
SRM25A	♦SSEI	369 -195
SRM25B	♦SSEI	370 - 3
SRM25D	♦SSEI	370 - 40
SRM25F	♦SSEI	369 -172
SRM25M	♦SSEI	370 - 75
SRM35A	♦SSEI	371 - 28
SRM35B	♦SSEI	371 - 49
SRM35D	♦SSEI	371 - 66
SRM35F	♦SSEI	371 - 9
SRM35M	♦SSEI	371 - 82
SRM1220	♦DII	375 -204
SRM1230	♦DII	375 -206
SRM1245	♦DII	375 -209
SRM1255	♦DII	375 -211
SRM2020	♦DII	375 -216
SRM2030	♦DII	375 -218
SRM2045	♦DII	376 - 7
SRM2055	♦DII	376 - 13
SRP100A	GIC	252 - 88
SRP100B	GIC	253 - 53
SRP100D	GIC	254 - 46
SRP100G	GIC	254 -175
SRP100J	GIC	255 -103
SRP100K	GIC	255 -181
SRP300A	♦GIC	252 - 89
SRP300B	♦GIC	253 - 54
SRP300D	♦GIC	254 - 68
SRP300G	♦GIC	254 -196
SRP300J	♦GIC	255 -104
SRP300K	♦GIC	255 -182
SRP600A	GIC	252 - 90
SRP600B	GIC	253 - 55
SRP600D	GIC	254 - 69
SRP600G	GIC	254 -197
SRP600J	GIC	255 -105
SRP600K	GIC	255 -183
SRS105	SEN	280 - 26
SRS105FR	SEN	252 -119
SRS110	♦SEN	280 - 84
SRS110FR	SEN	253 - 87
SRS120	♦SEN	280 -179
SRS120FR	SEN	253 -107
SRS130FR	SEN	254 -141
SRS140	♦SEN	281 - 83
SRS140FR	SEN	254 -217
SRS150FR	SEN	255 - 54
SRS160	♦SEN	281 -199
SRS160FR	SEN	255 -115
SRS160HE	♦SEN	279 - 7
SRS170HE	♦SEN	279 - 26
SRS180	♦SEN	282 - 64
SRS180FR	SEN	255 -189
SRS180HE	♦SEN	279 - 49
SRS190HE	♦SEN	279 - 56
SRS205	SEN	286 - 2
SRS205FR	SEN	252 -120
SRS210	♦SEN	286 - 34
SRS210FR	SEN	253 - 88
SRS220	♦SEN	286 - 75
SRS220FR	SEN	254 - 84
SRS230FR	SEN	254 -142
SRS240	♦SEN	286 -124
SRS240FR	SEN	254 -218
SRS250FR	SEN	255 - 55
SRS260	♦SEN	286 -173
SRS260FR	SEN	255 -116
SRS280	♦SEN	286 -208
SRS280FR	SEN	255 -190
SRS305	SEN	287 -172
SRS305FR	SEN	252 -117
SRS310	♦SEN	288 - 33
SRS310FR	SEN	253 - 85
SRS320	♦SEN	288 -113
SRS320FR	SEN	254 - 83
SRS330FR	SEN	254 -140
SRS340	♦SEN	288 -211
SRS340FR	SEN	254 -216
SRS350FR	SEN	255 - 50
SRS360	♦SEN	289 - 75
SRS360FR	SEN	255 -106
SRS380	♦SEN	289 -143
SRS1100	♦SEN	401 -196
SRS1100FR	SEN	256 - 39
SRS1100HE	♦SEN	401 -125
SRS2100	♦SEN	402 -122
SRS2100FR	SEN	256 - 40
SRS3100	♦SEN	402 -177
SRSHE05	♦SEN	252 - 21
SRSHE10	♦SEN	252 -206
SRSHE15	♦SEN	253 -174
SRSHED05	♦SEN	271 -135
SRSHED10	♦SEN	271 -152
SRSHED15	♦SEN	271 -169
SRSHEN05	♦SEN	271 -136
SRSHEN10	♦SEN	271 -153
SRSHEN15	♦SEN	271 -170
SRSHEP05	♦SEN	271 -137
SRSHEP10	♦SEN	271 -154
SRSHEP15	♦SEN	271 -171
SS1	SCH	444 - 73
SS1.5J4	ORIJ	250 - 80
SS2J4	ORIJ	250 - 81
SS3J4	ORIJ	250 - 82
SS7	SAKJ	293 - 10
SS7R	SAKJ	293 - 11
SS-3	♦SAKJ	289 -187
SS-5	♦SAKJ	290 -182

Δ-Registered with JEDEC by this manufacturer

♦-Mfr's data sheet available in microfilm service

1. TYPE No. CROSS INDEX

IN TYPE NUMBER SEQUENCE

TYPE No.	MFRS	Pg&Line
SSCDA1	♦SEN	293 -138
SSCDA1FR	♦SEN	293 - 1
SSCDA2	♦SEN	293 -145
SSCDA2FR	♦SEN	293 - 7
SSCDA4	♦SEN	293 -157
SSCDA4FR	♦SEN	293 - 16
SSCDA05	♦SEN	293 -132
SSCDA05FR	♦SEN	292 -215
SSCDA05HE	♦SEN	297 -102
SSCDA6	♦SEN	293 -162
SSCDA6FR	♦SEN	293 - 22
SSCDA8	♦SEN	297 - 54
SSCDA10	♦SEN	403 -105
SSCDA10HE	♦SEN	297 -117
SSCDA15HE	♦SEN	297 -131
SSCF2500	♦SEN	256 -160
SSCF5000	♦SEN	256 -214
SSCF7500	♦SEN	257 - 27
SSCF10000	♦SEN	257 - 54
SSCF12500	♦SEN	257 - 66
SSCH5000	♦SEN	423 -162
SSCH7500	♦SEN	425 -165
SSCH10000	♦SEN	427 -123
SSCH12500	♦SEN	428 -113
SSCH15000	♦SEN	429 - 94
SSCH20000	♦SEN	430 -175
SSCH25000	♦SEN	431 -138
SSCHE4000	♦SEN	256 -193
SSCHE6000	♦SEN	257 - 9
SSCHE8000	♦SEN	257 - 33
SSCHE10000	♦SEN	257 - 48
SSCHE11000	♦SEN	257 - 61
SSCHE15000	♦SEN	257 - 69
SSCHE20000	♦SEN	257 - 73
SSCNA1	♦SEN	293 -139
SSCNA1FR	♦SEN	293 - 2
SSCNA2	♦SEN	293 -146
SSCNA2FR	♦SEN	293 - 8
SSCNA4	♦SEN	293 -158
SSCNA4FR	♦SEN	293 - 17
SSCNA05	♦SEN	293 -133
SSCNA05FR	♦SEN	292 -216
SSCNA6	♦SEN	293 -163
SSCNA6FR	♦SEN	293 - 23
SSCPA1	♦SEN	293 -140
SSCPA1FR	♦SEN	293 - 3
SSCPA2	♦SEN	293 -147
SSCPA2FR	♦SEN	293 - 9
SSCPA4	♦SEN	293 -159
SSCPA4FR	♦SEN	293 - 18
SSCPA05	♦SEN	293 -134
SSCPA05FR	♦SEN	292 -217
SSCPA6	♦SEN	293 -164
SSCPA6FR	♦SEN	293 - 24
SSD41	♦SOD	375 - 23
SSD51	♦SOD	375 -120
SSD241	♦SOD	375 -172
SSF15	♦SCN	411 -145
SSF20	♦SCN	415 -128
SSF25	♦SCN	417 -195
SSF30	♦SCN	419 -191
SSF40A	♦SCN	422 - 48
SSF50A	♦SCN	424 - 53
SSF60A	♦SCN	424 - 54
SSH1A020	♦SCN	374 - 30
SSH1A040	♦SCN	374 - 45
SSH1A060	♦SCN	374 - 54
SSH1A080	♦SCN	374 - 57
SSH1A100	♦SCN	374 - 60
SSH1A120	♦SCN	374 - 61
SSH3A020	♦SCN	287 -150
SSH3A030	♦SCN	287 -155
SSH3A040	♦SCN	287 -159
SSH3A050	♦SCN	287 -167
SSH3A060	♦SCN	287 -209
SSH5A020	♦SCN	290 -101
SSH5A030	♦SCN	290 -102
SSH5A040	♦SCN	290 -104
SSH5A050	♦SCN	290 -110
SSH5A060	♦SCN	290 -130
SSH30A020D	♦SCN	299 -185
SSH30A020S	♦SCN	299 -186
SSH30A020T	♦SCN	299 -187
SSH30A030D	♦SCN	299 -191
SSH30A030S	♦SCN	299 -192
SSH30A030T	♦SCN	299 -193
SSH30A040D	♦SCN	299 -205
SSH30A040S	♦SCN	299 -206
SSH30A040T	♦SCN	299 -207
SSH30A050D	♦SCN	300 - 8
SSH30A050S	♦SCN	300 - 9
SSH30A050T	♦SCN	300 - 10
SSH30A060D	♦SCN	300 - 28
SSH30A060S	♦SCN	300 - 29
SSH30A060T	♦SCN	300 - 30
SSH75A020	♦SCN	375 - 98
SSH75A020V	♦SCN	304 -213
SSH75A030	♦SCN	375 -101
SSH75A030V	♦SCN	304 -215
SSH75A040	♦SCN	375 -104
SSH75A040V	♦SCN	304 -218
SSH75A050	♦SCN	375 -108
SSH75A050V	♦SCN	305 - 4
SSH75A060	♦SCN	375 -109
SSH75A060V	♦SCN	305 - 7
SSiB0110	♦SIEG	283 - 26
SSiB0120	♦SIEG	283 - 29
SSiB0140	♦SIEG	283 - 35
SSiB0160	♦SIEG	283 - 38
SSiB0180	♦SIEG	402 - 32
SSiB0510	♦SIEG	279 -141
SSiB0520	♦SIEG	279 -154
SSiB0540	♦SIEG	279 -173
SSiB0580	♦SIEG	401 -147

TYPE No.	MFRS	Pg&Line
SSiB0610	SIEG	282 -116
SSiB0620	SIEG	282 -121
SSiB0640	SIEG	282 -135
SSiB0680	SIEG	402 - 11
SSiB9860A	♦SIEG	405 - 68
SSiB9880A	♦SIEG	409 - 76
SSiB9890A	♦SIEG	412 - 54
SSiC0810	♦SIEG	285 -108
SSiC0820	♦SIEG	285 -126
SSiC0840	♦SIEG	285 -150
SSiC0860	♦SIEG	285 -170
SSiC0880	♦SIEG	402 - 84
SSiC1120	♦SIEG	285 -187
SSiC1140	♦SIEG	285 -188
SSiC1160	♦SIEG	285 -190
SSiC1180	♦SIEG	402 - 92
SSiC1220	♦SIEG	288 -147
SSiC1240	♦SIEG	289 - 54
SSiC1260	♦SIEG	289 -167
SSiC1280	♦SIEG	402 -164
SSiC1310	♦SIEG	290 - 36
SSiC1320	♦SIEG	290 - 50
SSiC1340	♦SIEG	290 - 71
SSiC1360	♦SIEG	290 - 80
SSiC1380	♦SIEG	402 -200
SSiC1560A	♦SIEG	283 - 39
SSiC1580A	♦SIEG	406 - 75
SSiC1660A	♦SIEG	285 - 87
SSiC1680A	♦SIEG	406 - 93
SSiC1710	♦SIEG	282 -117
SSiC1720	♦SIEG	282 -122
SSiC1740	♦SIEG	282 -136
SSiC1760	♦SIEG	285 -189
SSiC1780	♦SIEG	402 - 12
SSiC1960A	♦SIEG	286 -214
SSiC1980A	♦SIEG	406 -106
SSiC2060A	♦SIEG	290 - 79
SSiC2080A	♦SIEG	406 -131
SSiC9960A	♦SIEG	405 - 71
SSiC9980A	♦SIEG	409 - 82
SSiC9990A	♦SIEG	412 - 64
SSiD0440	♦SIEG	294 -132
SSiD0460	♦SIEG	294 -156
SSiD0460A	♦SIEG	294 -157
SSiD0480	♦SIEG	406 -167
SSiD0480A	♦SIEG	406 -168
SSiD04100	♦SIEG	411 -124
SSiD04100A	♦SIEG	411 -125
SSiD9960A	♦SIEG	405 - 82
SSiD9980A	♦SIEG	409 - 95
SSiD9990A	♦SIEG	412 - 85
SSiE1102	♦COO	300 -190
	♦SIEG	
SSiE1105	♦COO	300 -203
	♦SIEG	
SSiE1110	♦COO	300 -214
	♦SIEG	
SSiE1120	♦COO	301 - 11
	♦SIEG	
SSiE1130	♦COO	301 - 23
	♦SIEG	
SSiE1140	♦COO	301 - 34
	♦SIEG	
SSiE1202	♦COO	300 -191
	SIEG	
SSiE1205	♦COO	300 -204
	SIEG	
SSiE1210	♦COO	300 -215
	SIEG	
SSiE1220	♦COO	301 - 12
	SIEG	
SSiE1230	♦COO	301 - 24
	SIEG	
SSiE1240	♦COO	301 - 35
	SIEG	
SSiE1305	♦SIEG	298 -130
SSiE1310	♦SIEG	298 -168
SSiE1320	♦SIEG	299 - 18
SSiE1330	♦SIEG	299 - 77
SSiE1340	♦SIEG	299 -125
SSiE1405	SIEG	300 -201
SSiE1410	SIEG	300 -212
SSiE1420	SIEG	301 - 8
SSiE1440	SIEG	301 - 33
SSiE2040	♦SIEG	297 -211
SSiE2060	♦SIEG	403 -112
SSiE2080A	♦SIEG	409 -120
SSiE4360	♦COO	405 - 91
	SIEG	
SSiE4360A	♦COO	415 -123
SSiE4383	♦COO	411 -131
	SIEG	
SSiE4383A	♦COO	417 - 21
SSiE4460	♦COO	405 - 92
	SIEG	
SSiE4460A	♦COO	415 -124
SSiE4483	♦COO	411 -132
	SIEG	
SSiE4483A	♦COO	417 - 22
SSiE4560	SIEG	405 - 89
SSiE4583	SIEG	411 -129
SSiE4660	SIEG	405 - 90
SSiE4683	SIEG	411 -130
SSiE20100	♦SIEG	413 -151
SSiE20100A	♦SIEG	413 -152
SSiF3825	♦SIEG	305 -130
SSiF3840	♦SIEG	305 -132
SSiF3860	♦SIEG	405 -101
SSiF3883	♦SIEG	411 -141
SSiF3883A	♦SIEG	411 -142
SSiF3925	♦SIEG	305 -131
SSiF3940	♦SIEG	305 -133
SSiF3960	♦SIEG	405 -102
SSiF3983	♦SIEG	411 -143

TYPE No.	MFRS	Pg&Line
SSiF3983A	♦SIEG	411 -144
SSiG3825	♦SIEG	306 -187
SSiG3840	♦SIEG	306 -189
SSiG3860	♦SIEG	405 -106
SSiG3860A	♦SIEG	405 -107
SSiG3883	♦SIEG	411 -158
SSiG3883A	♦SIEG	411 -159
SSiG3925	♦SIEG	306 -188
SSiG3940	♦SIEG	306 -190
SSiG3960	♦SIEG	405 -108
SSiG3960A	♦SIEG	405 -109
SSiG3983	♦SIEG	411 -160
SSiG3983A	♦SIEG	411 -161
SSiK44-40	SIEG	264 - 73
SSiK44-65	SIEG	264 - 79
SSiK44-83	SIEG	264 - 81
SSiK2825	♦SIEG	310 - 42
SSiK2840	♦SIEG	310 - 43
SSiK2860	♦SIEG	405 -130
SSiK2883	♦SIEG	411 -183
SSiK3825	♦SIEG	308 - 97
SSiK3840	♦SIEG	308 -111
SSiK3860	♦SIEG	405 -118
SSiK3883	♦SIEG	411 -171
SSiK3883A	♦SIEG	411 -172
SSiK3925	SIEG	308 - 98
SSiK3940	SIEG	308 -112
SSiK3960	SIEG	405 -119
SSiK3983	SIEG	411 -173
SSiK3983A	SIEG	411 -174
SSiK4440	SIEG	264 - 74
SSiK4465	SIEG	264 - 80
SSiK4483	SIEG	264 - 82
SSiK24120	♦SIEG	416 - 86
SSiK24135	♦SIEG	417 -201
SSiK25120	♦SIEG	416 - 87
SSiK25135	♦SIEG	417 -202
SSiL44-40	SIEG	265 -137
SSiL44-65	SIEG	265 -154
SSiL44-83	SIEG	265 -162
SSiL2825	♦SIEG	311 -201
SSiL2840	♦SIEG	311 -202
SSiL2860	♦SIEG	405 -154
SSiL2883	♦SIEG	411 -204
SSiL3825	♦SIEG	310 -185
SSiL3840	♦SIEG	310 -187
SSiL3860	♦SIEG	405 -137
SSiL3883	♦SIEG	411 -189
SSiL3883A	♦SIEG	411 -190
SSiL3925	SIEG	310 -186
SSiL3940	SIEG	310 -188
SSiL3960	SIEG	405 -138
SSiL3983	SIEG	411 -191
SSiL3983A	SIEG	310 -184
SSiL4040	♦SIEG	274 - 32
SSiL4065	♦SIEG	264 - 30
SSiL4440	SIEG	265 -138
SSiL4465	SIEG	265 -155
SSiL4483	SIEG	265 -163
SSiL20100	SIEG	413 -155
SSiL20100A	SIEG	410 - 62
SSiL20120	SIEG	416 - 89
SSiL24100	♦SIEG	414 - 73
SSiL24120	♦SIEG	416 -107
SSiL30100	SIEG	414 - 35
SSiL30100A	♦SIEG	309 - 88
SSiL30120	SIEG	416 - 88
SSiN3060	♦SIEG	405 -150
SSiN3083	♦SIEG	411 -199
SSiN3160	SIEG	405 -151
SSiN3183	SIEG	411 -200
SSiN4240	♦SIEG	274 - 38
SSiN4260	♦SIEG	405 - 60
SSiN4283	♦SIEG	410 -200
SSiN4283A	SIEG	312 - 79
SSiN6610	SIEG	264 - 90
SSiN6665	♦SIEG	264 - 77
SSiN6683	♦SIEG	264 - 83
SSiN30100	♦SIEG	414 - 75
SSiN30120	♦SIEG	416 -108
SSiN31100	SIEG	414 - 76
SSiN31100A	SIEG	311 -165
SSiN31120	SIEG	416 -109
SSiN31120A	SIEG	311 -166
SSiN42100	♦SIEG	413 -191
SSiN42100A	SIEG	312 - 80
SSiN42120	♦SIEG	416 - 69
SSiN42120A	SIEG	312 - 81
SSiN66110	♦SIEG	264 - 91
SSiP6060	♦SIEG	405 -182
SSiP6083	♦SIEG	412 - 5
SSiP32175	♦SIEG	420 - 88
SSiP32200	♦SIEG	421 - 41
SSiP60100	♦SIEG	414 -124
SSiP60120	♦SIEG	416 -144
SSiP62135	♦SIEG	418 - 26
SSiP62150	SIEG	420 - 96
SSiP62175	♦SIEG	420 - 97
SSiP62200	♦SIEG	421 - 46
SSiP62220	♦SIEG	422 - 72
SSiP67110	♦SIEG	414 -172
SSiP67120	♦SIEG	416 - 67
SSiP67135	♦SIEG	417 -100
SSiR6083	♦SIEG	412 - 8
SSiR60100	♦SIEG	414 -134
SSiR60120	♦SIEG	416 -154
SSiR62135	♦SIEG	418 - 46
SSiR62175	♦SIEG	420 -110
SSiR62200	♦SIEG	421 - 58
SSiR62220	♦SIEG	422 - 85
SSiR67110	♦SIEG	414 -173
SSiR67120	♦SIEG	416 - 68
SSiR67135	♦SIEG	417 -101
SSiT6090	SIEG	413 -141

TYPE No.	MFRS	Pg&Line
SSiT60100	SIEG	414 -139
SSiT60120	SIEG	416 -159
SSM20	♦SCN	415 -134
SSM30	♦SCN	419 -192
SSM40	♦SCN	422 - 55
SSM50A	♦SCN	424 - 55
SSM60A	♦SCN	425 - 28
SSP820	♦SOD	436 - 69
SSP830	♦SOD	436 - 70
SSP840	♦SOD	436 - 71
SSP1520	♦SOD	436 - 72
SSP1530	♦SOD	436 - 73
SSP1540	♦SOD	436 - 74
SSP3020	♦SOD	436 - 75
SSP3030	♦SOD	436 - 76
SSP3040	♦SOD	436 - 77
SSP6020	♦SOD	375 - 56
SSP6030	♦SOD	375 - 59
SSP6040	♦SOD	375 - 64
SSPD3020	♦SOD	299 -188
SSPD3030	♦SOD	299 -194
SSPD3040	♦SOD	299 -208
ST2-10	SAR	294 -207
ST2-20	SAR	295 - 20
ST2-30	SAR	295 - 48
ST2-40	SAR	295 - 72
ST2-50	SAR	295 - 97
ST2-60	SAR	295 -121
ST2-80	SAR	295 -159
ST2-100	SAR	403 - 60
ST4-10	SAR	300 -209
ST4-20	SAR	301 - 5
ST4-30	SAR	301 - 13
ST4-40	SAR	301 - 20
ST4-50	SAR	301 - 25
ST4-60	SAR	301 - 32
ST5A10	SAR	302 -137
ST5A20	SAR	302 -157
ST5A30	SAR	302 -180
ST5A40	SAR	302 -193
ST5A50	SAR	302 -214
ST5A60	SAR	303 - 1
ST6-10	SAR	305 -190
ST6-20	SAR	305 -205
ST6-30	SAR	306 - 13
ST6-40	SAR	306 - 30
ST6-50	SAR	306 - 74
ST6-60	SAR	306 - 87
ST7-10	SAR	308 - 64
ST7-20	SAR	308 - 74
ST7-30	SAR	308 - 82
ST7-40	SAR	308 - 90
ST7-50	SAR	308 - 99
ST7-60	SAR	308 -105
ST8-10	SAR	309 - 93
ST8-20	SAR	309 -113
ST8-30	SAR	309 -134
ST8-40	SAR	309 -152
ST8-50	SAR	309 -173
ST8-60	SAR	309 -186
ST9-10	SAR	309 - 94
ST9-20	SAR	309 -114
ST9-30	SAR	309 -135
ST9-40	SAR	309 -153
ST9-50	SAR	309 -174
ST9-60	SAR	309 -187
ST10-10	SAR	308 - 65
ST10-20	SAR	308 - 75
ST10-30	SAR	308 - 83
ST10-40	SAR	308 - 91
ST10-50	SAR	308 -100
ST10-60	SAR	308 -106
ST11-10	SAR	304 - 33
ST11-20	SAR	304 - 61
ST11-30	SAR	304 - 89
ST11-40	SAR	304 -109
ST11-50	SAR	304 -132
ST11-60	SAR	304 -146
ST11-80	SAR	304 -180
ST12	♦SAR	279 -190
ST14	♦SAR	279 -191
ST16	♦SAR	429 -132
ST16-10	♦SAR	307 - 76
ST16-20	♦SAR	307 -113
ST16-30	♦SAR	307 -140
ST16-40	♦SAR	307 -178
ST16-50	♦SAR	307 -194
ST16-60	♦SAR	308 - 6
ST16-70	♦SAR	308 - 18
ST16-80	♦SAR	308 - 49
ST16-100	♦SAR	404 -113
ST16-120	♦SAR	407 -204
ST16-140	♦SAR	410 - 36
ST18	SAR	279 -192
ST20-10	SAR	310 -148
ST20-20	SAR	310 -149
ST20-40	SAR	310 -150
ST20-60	SAR	310 -151
ST20-80	SAR	310 -152
ST20-100	SAR	404 -171
ST20-120	SAR	408 - 51
ST20-140	SAR	410 - 85
ST22	♦APD	163 - 21
	♦EAS	
ST23	♦APD	163 - 11
	♦EAS	
ST24	♦EAS	231 - 36
ST37	♦APD	163 - 46
	♦EAS	
ST38	♦APD	163 - 97
	♦EAS	
ST39	♦APD	164 - 91
	♦EAS	

TYPE No.	MFRS	Pg&Line
ST41	♦APD	165 -188
	♦EAS	
STB1	♦APD	163 - 22
STB2	♦APD	163 - 65
STB4	♦APD	164 -109
STB7	APD	169 -120
STB12	APD	181 - 43
STB567	♦APD	231 -119
	UNI	
STB568	♦APD	231 -123
	UNI	
STB569	♦APD	231 -127
	UNI	
STV2H	SAKJ	442 - 75
STV3H	SAKJ	442 - 76
STV4H	SAKJ	442 - 77
SUES501	♦SCN	293 -204
SUES502	♦SCN	293 -215
SUES503	♦SCN	302 -135
SUES504	♦SCN	302 -148
SUES505	♦SCN	302 -150
SUES601	♦SCN	300 - 11
SUES602	♦SCN	300 - 39
SUES603	♦SCN	300 - 59
SUES604	♦SCN	300 - 72
SUES605	♦SCN	300 - 97
SUES606	♦SCN	300 -111
SUES607	♦SCN	255 - 33
SUES608	♦SCN	255 - 71
SUES609	♦SCN	255 -149
SUES610	♦SCN	255 -158
SUES611	♦SCN	256 - 10
SUES701	♦SCN	299 - 81
SUES702	♦SCN	298 -135
SUES703	♦SCN	298 -164
SUES704	♦SCN	298 -174
SUES705	♦SCN	299 - 5
SUES706	♦SCN	299 - 29
SUES707	♦SCN	255 - 34
SUES708	♦SCN	255 - 72
SUES709	♦SCN	255 -150
SUES710	♦SCN	255 -159
SUES711	♦SCN	256 - 11
SUES801	♦SCN	304 - 18
SUES802	♦SCN	304 - 32
SUES803	♦SCN	304 - 52
SUES804	♦SCN	304 - 60
SUES805	♦SCN	304 - 88
SUES806	♦SCN	304 -105
SUES807	♦SCN	255 - 35
SUES808	♦SCN	255 - 73
SUES809	♦SCN	255 -151
SUES810	♦SCN	255 -160
SUES811	♦SCN	256 - 12
SUES1101	♦SCN	289 -176
SUES1102	♦SCN	289 -180
SUES1103	♦SCN	289 -182
SUES1104	♦SCN	287 -143
SUES1105	♦SCN	287 -144
SUES1106	♦SCN	287 -145
SUES1107	♦SCN	255 - 36
SUES1108	♦SCN	255 - 74
SUES1109	♦SCN	255 -152
SUES1110	♦SCN	255 -161
SUES1111	♦SCN	256 - 13
SUES1301	♦SCN	291 -121
SUES1302	♦SCN	291 -163
SUES1303	♦SCN	291 -187
SUES1304	♦SCN	290 -184
SUES1305	♦SCN	290 -206
SUES1306	♦SCN	291 - 13
SUES1307	♦SCN	255 - 37
SUES1308	♦SCN	255 - 75
SUES1309	♦SCN	255 -153
SUES1310	♦SCN	255 -162
SUES1311	♦SCN	256 - 14
SUES2601	♦SCN	300 - 12
SUES2602	♦SCN	300 - 40
SUES2603	♦SCN	300 - 60
SUES2604	♦SCN	300 - 73
SUES2605	♦SCN	300 - 98
SUES2606	♦SCN	300 -112
SUES2607	♦SCN	255 - 38
SUES2608	♦SCN	255 - 76
SUES2609	♦SCN	255 -154
SUES2610	♦SCN	255 -163
SUES2611	♦SCN	256 - 15
SV1	♦SCH	228 - 53
SV1LR	♦SCH	163 - 6
SV03	SAKJ	442 - 78
SV03S	SAKJ	442 - 79
SV04S	SAKJ	442 - 80
SV10-16RK	♦THEF	412 -217
SV10-16RM	♦THEF	412 -218
SV10-18RK	♦THEF	414 - 22
SV10-18RM	♦THEF	414 - 23
SV10-20RK	♦THEF	415 -132
SV10-20RM	♦THEF	415 -133
SV10-22RK	♦THEF	416 - 84
SV10-22RM	♦THEF	416 - 85
SV10-24RK	♦THEF	417 - 23
SV10-24RM	♦THEF	417 - 24
SV10-25RK	♦THEF	417 -198
SV10-25RM	♦THEF	417 -199
SV15-15FK	♦THEF	411 -166
SV15-15FM	♦THEF	411 -167
SV15-15FRK	♦THEF	411 -168
SV15-15FRM	♦THEF	411 -169
SV100A1	♦VEC	442 -100
SV100A3	♦VEC	442 -101
SV100A	♦VEC	442 -102
SV100D	♦VEC	442 -103
SV300A2	VEC	442 -104
SV300A5	VEC	442 -105

1. TYPE No. CROSS INDEX

IN TYPE NUMBER SEQUENCE

TYPE No.	MFRS	Pg&Line
SV800	♦SCN	299 -175
SV1000	♦SCN	403 -147
SV1502F	♦THEF	263 - 97
SV1504F	♦THEF	263 -104
SV1506F	♦THEF	263 -107
SV1508F	♦THEF	263 -110
SV1510F	♦THEF	263 -112
SV1512F	♦THEF	263 -116
SV1514F	♦THEF	263 -117
SV2002	♦THEF	308 -161
SV2004	♦THEF	308 -181
SV2006	♦THEF	308 -198
SV2008	♦THEF	308 -216
SV2010	♦THEF	404 -124
SV2012	♦THEF	407 -217
SV2014	♦THEF	410 - 47
SV2016	♦THEF	413 - 23
SV2018	♦THEF	414 - 28
SV2020	♦THEF	415 -138
SV3140	♦PDE	163 - 56
SV3140A	♦PDE	163 - 55
SV3140B	♦PDE	163 - 54
SV3141	♦PDE	163 - 92
SV3141A	♦PDE	163 - 91
SV3141B	♦PDE	163 - 90
SV3142	♦PDE	163 -126
SV3142A	♦PDE	163 -125
SV3142B	♦PDE	163 -124
SV3143	♦PDE	164 - 7
SV3143A	♦PDE	164 - 6
SV3143B	♦PDE	164 - 5
SV3144	♦PDE	164 -125
SV3144A	♦PDE	164 -123
SV3144B	♦PDE	164 -122
SV3145	♦PDE	165 -110
SV3145A	♦PDE	165 - 95
SV3145B	♦PDE	165 - 92
SV3173	PDE	183 - 55
SV3174	PDE	183 - 56
SV3175	PDE	183 - 57
SV3176	PDE	183 - 58
SV-1	SHEJ	232 - 61
SV-1#B	SAKJ	442 - 81
SV-02	SAKJ	442 - 82
SV-2#B	SAKJ	442 - 83
SV-2#C	SHEJ	232 - 23
SV-3#B	SAKJ	442 - 84
SV-3#C	SHEJ	232 - 43
SV-04	SAKJ	442 - 85
SV-05	SAKJ	442 - 86
SV-06	SAKJ	442 - 87
SV-100-1	♦GIC	442 - 88
SVD50-2	♦TRWO	257 - 99
	♦TRWS	
SVD50-3	♦TRWO	257 -100
	TRWS	
SVD50-6#B	♦TRWS	257 -128
SVD50-6#C	♦TRWS	257 -129
SVD50-12#B	♦TRWS	257 -130
SVD50-12#C	♦TRWS	257 -131
SVD50-12I	♦TRWO	257 -132
SVD50-30#B	♦TRWS	257 -144
SVD50-30#C	♦TRWS	257 -145
SVD50-61	♦TRWO	257 -133
SVD100-2	♦TRWO	258 - 2
	♦TRWS	
SVD100-3	♦TRWO	258 - 3
	♦TRWS	
SVD100-6#B	♦TRWS	258 - 35
SVD100-6#C	♦TRWS	258 - 36
SVD100-12#B	♦TRWS	258 - 37
SVD100-12#C	♦TRWS	258 - 38
SVD100-12I	♦TRWO	258 - 39
SVD100-30#B	♦TRWS	258 - 53
SVD100-30#C	♦TRWS	258 - 54
SVD100-30I	♦TRWO	258 - 55
SVD100-61	♦TRWO	258 - 40
SVD150-2	♦TRWO	258 -163
	♦TRWS	
SVD150-3	♦TRWO	258 -164
	♦TRWS	
SVD200-2	♦TRWO	258 -212
	♦TRWS	
SVD200-3	♦TRWO	259 - 1
	♦TRWS	
SVD200-12	♦TRWO	259 - 23
SVD200-12I	♦TRWO	259 - 24
SVD200-30	♦TRWO	259 - 40
SVD200-30I	♦TRWO	259 - 41
SVD300-12#B	♦TRWS	259 -170
SVD300-12#C	♦TRWS	259 -171
SVD300-12I	♦TRWO	259 -172
SVD350-12#B	♦TRWS	259 -210
SVD350-12#C	♦TRWS	259 -211
SVD350-12I	♦TRWO	259 -212
SVD400-12#B	♦TRWS	260 - 8
SVD400-12#C	♦TRWS	260 - 9
SVD400-12I	♦TRWO	260 - 10
SVD450-12#B	♦TRWS	260 -116
SVD450-12#C	♦TRWS	260 -117
SVD450-12I	♦TRWO	260 -118
SW02CXC14C	WESB	313 -151
SW02CXC300	WESB	312 - 86
SW02CXC400	WESB	312 -154
SW02CXC805	WESB	313 - 93
SW02CXC935	WESB	313 -114
SW02HHN300	WESB	310 -162
SW02HHN400	WESB	310 -205
SW02KBN805	WESB	312 - 6
SW02KBN935	WESB	312 - 72
SW02KBR805	♦WESB	312 - 7
SW02KBR935	♦WESB	312 - 68
SW02PCN012	WESB	297 - 51
SW02PCN020	WESB	300 - 87

TYPE No.	MFRS	Pg&Line
SW02PCN030	WESB	300 - 91
SW02PCN040	WESB	304 - 66
SW02PCN055	WESB	305 - 16
SW02PCN075	WESB	305 - 17
SW02PHN151	♦WESB	307 -101
SW02PHN201	♦WESB	308 -167
SW02PHN300	WESB	310 -163
SW02PHN400	WESB	310 -206
SW04CXC14C	WESB	237 -190
SW04CXC300	WESB	237 -142
SW04CXC400	WESB	237 -149
SW04CXC805	WESB	237 -172
SW04CXC935	WESB	237 -187
SW04HHN300	WESB	310 -168
SW04HHN400	WESB	311 - 6
SW04KBN805	WESB	312 - 14
SW04KBN935	WESB	312 - 73
SW04KBR805	♦WESB	312 - 15
SW04KBR935	♦WESB	312 - 69
SW04PCN012	WESB	297 - 52
SW04PCN020	WESB	300 -127
SW04PCN030	WESB	300 -129
SW04PCN040	WESB	304 -113
SW04PCN055	WESB	305 - 21
SW04PCN075	WESB	305 - 22
SW04PHN151	♦WESB	307 -167
SW04PHN201	♦WESB	308 -187
SW04PHN300	WESB	310 -169
SW04PHN400	WESB	311 - 7
SW06CXC14C	WESB	237 -191
SW06CXC300	WESB	237 -143
SW06CXC400	WESB	237 -150
SW06CXC805	WESB	237 -173
SW06CXC935	WESB	237 -188
SW06HHN300	WESB	310 -175
SW06HHN400	WESB	311 - 27
SW06KBN805	WESB	312 - 21
SW06KBN935	WESB	312 - 74
SW06KBR805	♦WESB	312 - 22
SW06KBR935	♦WESB	312 - 70
SW06PCN012	WESB	297 - 53
SW06PCN020	WESB	300 -148
SW06PCN030	WESB	300 -151
SW06PCN040	WESB	304 -150
SW06PCN055	WESB	305 - 23
SW06PCN075	WESB	305 - 24
SW06PHN151	♦WESB	307 -212
SW06PHN201	♦WESB	308 -203
SW06PHN300	WESB	310 -176
SW06PHN400	WESB	311 - 28
SW08CXC14C	WESB	237 -192
SW08CXC300	WESB	237 -144
SW08CXC400	WESB	237 -151
SW08CXC805	WESB	237 -174
SW08CXC935	WESB	237 -189
SW08HHN300	WESB	310 -182
SW08HHN400	WESB	311 - 48
SW08KBN805	WESB	312 - 31
SW08KBN935	WESB	312 - 75
SW08KBR805	♦WESB	312 - 32
SW08KBR935	♦WESB	312 - 71
SW08PCN012	WESB	297 - 55
SW08PCN020	WESB	300 -165
SW08PCN030	WESB	300 -167
SW08PCN040	WESB	304 -182
SW08PCN055	WESB	305 - 25
SW08PCN075	WESB	305 - 26
SW08PHN151	♦WESB	308 - 37
SW08PHN201	♦WESB	309 - 1
SW08PHN300	WESB	310 -183
SW08PHN400	WESB	311 - 49
SW10	WESB	237 -152
SW10CXC14C	WESB	237 -193
SW10CXC300	WESB	237 -145
SW10CXC400	WESB	237 -153
SW10CXC805	WESB	237 -175
SW10HHN400	WESB	404 -186
SW10KBN805	WESB	405 - 3
SW10KBN935	WESB	405 - 15
SW10KBR805	♦WESB	405 - 4
SW10KBR935	♦WESB	405 - 14
SW10PCN012	WESB	403 -107
SW10PCN020	WESB	403 -161
SW10PCN030	WESB	403 -164
SW10PCN040	WESB	404 - 9
SW10PCN055	WESB	404 - 27
SW10PCN075	WESB	404 - 29
SW10PHN151	♦WESB	404 -102
SW10PHN201	♦WESB	404 -129
SW10PHN300	WESB	404 -176
SW10PHN400	WESB	404 -187
SW12CXC14C	WESB	237 -194
SW12CXC300	WESB	237 -146
SW12CXC400	WESB	237 -154
SW12CXC805	WESB	237 -176
SW12HHN300	WESB	404 -177
SW12HHN400	WESB	408 - 66
SW12KBN805	WESB	408 -111
SW12KBN935	WESB	408 -128
SW12KBR805	♦WESB	408 -112
SW12KBR935	♦WESB	408 -127
SW12PCN012	WESB	406 -192
SW12PCN020	WESB	407 - 4
SW12PCN030	WESB	407 - 8
SW12PCN040	WESB	407 - 86
SW12PCN055	WESB	407 -102
SW12PCN075	WESB	407 -104
SW12PHN151	♦WESB	407 -194
SW12PHN201	♦WESB	408 - 2
SW12PHN300	WESB	408 - 56
SW12PHN400	WESB	408 - 67
SW14CXC14C	WESB	237 -195
SW14CXC300	WESB	237 -147
SW14CXC400	WESB	237 -155

TYPE No.	MFRS	Pg&Line
SW14CXC805	WESB	237 -177
SW14HHN300	WESB	410 - 89
SW14HHN400	WESB	410 -101
SW14KBN805	WESB	410 -144
SW14KBR805	♦WESB	410 -145
SW14PCN012	WESB	409 -116
SW14PCN030	WESB	409 -136
SW14PCN040	WESB	409 -187
SW14PCN075	WESB	409 -194
SW14PHN151	♦WESB	410 - 34
SW14PHN201	♦WESB	410 - 52
SW14PHN300	WESB	410 - 90
SW14PHN400	WESB	410 -102
SW15CXC14C	WESB	237 -196
SW15CXC300	WESB	237 -148
SW15CXC400	WESB	237 -156
SW15HHN300	WESB	411 -187
SW15HHN400	WESB	411 -194
SW15KBR805	♦WESB	411 -208
SW15PCN012	WESB	411 -126
SW15PCN030	WESB	411 -128
SW15PCN040	WESB	411 -135
SW15PCN055	WESB	411 -137
SW15PCN075	WESB	411 -138
SW15PHN300	WESB	411 -188
SW15PHN400	WESB	411 -195
SW16CXC320	WESB	237 - 49
SW16CXC380	WESB	237 -140
SW16CXC805	WESB	237 -178
SW16CXC950	WESB	413 -136
SW16CXC990	♦WESB	413 -132
SW16HHN320	WESB	413 - 45
SW16HHN380	WESB	413 - 49
SW16KBN805	WESB	413 - 88
SW16KBR805	♦WESB	413 - 89
SW16PCN012	WESB	412 -111
SW16PCN020	WESB	412 -128
SW16PCN030	WESB	412 -130
SW16PCN040	WESB	412 -173
SW16PCN055	WESB	412 -180
SW16PCN075	WESB	412 -181
SW16PHN151	♦WESB	413 - 9
SW16PHN201	♦WESB	413 - 24
SW16PHN320	WESB	413 - 46
SW16PHN380	WESB	413 - 50
SW18CXC320	WESB	237 - 50
SW18CXC380	WESB	237 -141
SW18CXC805	WESB	237 -179
SW18CXC950	WESB	414 -132
SW18CXC990	♦WESB	414 -127
SW18HHN320	WESB	414 - 51
SW18HHN380	WESB	414 - 55
SW18KBN805	WESB	414 - 89
SW18KBR805	♦WESB	414 - 90
SW18PHN320	WESB	414 - 52
SW18PHN380	WESB	414 - 56
SW20CXC320	WESB	237 - 51
SW20CXC380	WESB	237 -136
SW20CXC805	WESB	237 -137
SW20CXC950	WESB	416 - 18
SW20CXC990	♦WESB	416 - 11
SW20HHN320	WESB	415 -151
SW20HHN380	WESB	415 -155
SW20KBN805	WESB	415 -188
SW20KBR805	♦WESB	415 -189
SW20PHN320	WESB	415 -152
SW20PHN380	WESB	415 -156
SW22CXC320	WESB	237 - 52
SW22CXC380	WESB	237 -138
SW22CXC805	WESB	237 -180
SW22CXC950	WESB	416 -152
SW22CXC990	♦WESB	416 -147
SW22HHN320	WESB	416 - 95
SW22HHN380	WESB	416 - 97
SW22KBN805	WESB	416 -119
SW22KBR805	♦WESB	416 -120
SW22PHN320	WESB	416 - 96
SW22PHN380	WESB	416 - 98
SW24CXC320	WESB	237 - 53
SW24CXC380	WESB	237 -139
SW24CXC635	WESB	237 -169
SW24CXC950	WESB	417 - 94
SW24CXC990	♦WESB	417 - 89
SW24HHN320	♦WESB	417 - 29
SW24HHN380	WESB	417 - 31
SW24KBN635	WESB	417 - 47
SW24KBR635	♦WESB	417 - 48
SW24PHN320	WESB	417 - 30
SW24PHN380	WESB	417 - 32
SW26CXC635	WESB	237 -170
SW26CXC820	WESB	237 -181
SW26KBR635	♦WESB	418 - 83
SW28CXC635	WESB	237 -171
SW28CXC820	WESB	237 -182
SW28KBN635	WESB	418 -189
SW28KBR635	♦WESB	418 -190
SW30CXC13C	WESB	420 - 27
SW30CXC820	WESB	237 -183
SW30KBN635	WESB	419 -210
SW30KBR595	♦WESB	419 -202
SW30KBR635	♦WESB	419 -211
SW32CXC13C	WESB	420 -114
SW32CXC595	WESB	237 -161
SW32CXC820	WESB	237 -184
SW32KBN595	WESB	420 - 83
SW32KBR595	♦WESB	420 - 84
SW34CXC13C	WESB	420 -168
SW34CXC595	WESB	237 -162
SW34CXC820	WESB	237 -185
SW34KBN595	WESB	420 -149
SW34KBR595	♦WESB	420 -150
SW36CXC13C	WESB	421 - 59
SW36CXC595	WESB	237 -163
SW36CXC680	WESB	237 -164

TYPE No.	MFRS	Pg&Line
SW36CXC820	WESB	237 -186
SW36KBN595	WESB	421 - 34
SW36KBR595	♦WESB	421 - 35
SW38CXC515	WESB	237 -157
SW38CXC680	WESB	237 -165
SW38KBN515	WESB	421 - 95
SW38KBR515	♦WESB	421 - 96
SW40CXC515	WESB	237 -158
SW40CXC680	WESB	237 -166
SW40KBN515	WESB	422 - 64
SW40KBR515	♦WESB	422 - 65
SW42CXC515	WESB	237 -159
SW42CXC680	WESB	237 -167
SW42KBN515	WESB	422 -120
SW42KBR515	♦WESB	422 -121
SW44CXC515	WESB	237 -160
SW44CXC680	WESB	237 -168
SW44KBN515	WESB	422 -167
SW44KBR515	♦WESB	422 -168
SWH10	ORIJ	427 -116
SX10#B	♦UNI	401 -187
SX15#B	♦UNI	411 - 76
SX20#B	♦UNI	415 - 52
SX25	♦UNI	417 -156
SX30#B	♦UNI	419 -125
SX40	♦UNI	421 -206
SX50	♦UNI	423 -167
SX60	♦UNI	424 -194
SX80	♦UNI	426 - 65
SX100#B	♦UNI	427 -103
SX751	♦MULB	293 - 81
♦PHIN	♦RTCF	
	♦VALG	
SX752	♦MULB	293 - 94
♦PHIN	♦RTCF	
	♦VALG	
SX753	♦MULB	293 -100
♦PHIN	♦RTCF	
	♦VALG	
SX754	♦MULB	293 -112
♦PHIN	♦RTCF	
	♦VALG	
SXS10	♦UNI	401 -188
SXS15	♦UNI	411 - 77
SXS20	♦UNI	415 - 53
SXS25	♦UNI	417 -157
SXS30	♦UNI	419 -126
SXS40	♦UNI	421 -207
SXS50	♦UNI	423 -168
SXS60	♦UNI	424 -195
SXS80	♦UNI	426 - 66
SXS100	♦UNI	427 -104
SY-23	SAKJ	281 - 4
SY-24	♦SAKJ	281 - 31
SZ1-1.8-10-25		163 -113
	♦SSX	
SZ1-1.8-20-25		163 -114
	♦SSX	
SZ1-1.8-5-25	♦SSX	163 -112
SZ1-2.0-10-25		163 -146
	♦SSX	
SZ1-2.0-20-25		163 -147
	♦SSX	
SZ1-2.0-5-25	♦SSX	163 -145
SZ1-2.2-10-25		163 -193
	♦SSX	
SZ1-2.2-20-25		163 -194
	♦SSX	
SZ1-2.2-5-25	♦SSX	163 -192
SZ1-2.4-10-25		164 - 73
	♦SSX	
SZ1-2.4-20-25		164 - 74
	♦SSX	
SZ1-2.4-5-25	♦SSX	164 - 72
SZ1-2.7-10-25		164 -197
	♦SSX	
SZ1-2.7-20-25		164 -198
	♦SSX	
SZ1-2.7-5-25	♦SSX	164 -194
SZ1-3.0-10-25		165 -138
	♦SSX	
SZ1-3.0-20-25		165 -140
	♦SSX	
SZ1-3.0-5-25	♦SSX	165 -134
SZ1-3.3-10-25		166 - 86
	♦SSX	
SZ1-3.3-20-25		166 - 88
	♦SSX	
SZ1-3.3-5-25	♦SSX	166 - 78
SZ1-3.6-10-25		167 - 53
	♦SSX	
SZ1-3.6-20-25		167 - 56
	♦SSX	
SZ1-3.6-5-25	♦SSX	167 - 46
SZ1-3.9-10-25		168 - 34
	♦SSX	
SZ1-3.9-20-25		168 - 37
	♦SSX	
SZ1-3.9-5-25	♦SSX	168 - 25
SZ1-4.3-10-25		169 - 54
	♦SSX	
SZ1-4.3-20-25		169 - 57
	♦SSX	
SZ1-4.3-5-25	♦SSX	169 - 47
SZ1-4.7-10-25		170 -110
	♦SSX	
SZ1-4.7-20-25		170 -113
	♦SSX	
SZ1-4.7-5-25	♦SSX	170 -101
SZ1-5.1-10-25		171 -191
	♦SSX	
SZ1-5.1-20-25		171 -194
	♦SSX	
SZ1-5.1-5-25	♦SSX	171 -184

TYPE No.	MFRS	Pg&Line
SZ1-5.6-10-25		173 - 79
	♦SSX	
SZ1-5.6-20-25		173 - 82
	♦SSX	
SZ1-5.6-5-25	♦SSX	173 - 68
SZ1-6.2-10-25		175 -142
	♦SSX	
SZ1-6.2-20-25		175 -145
	♦SSX	
SZ1-6.2-5-25	♦SSX	175 -131
SZ1-6.8-10-25		178 -136
	♦SSX	
SZ1-6.8-20-25		178 -146
	♦SSX	
SZ1-6.8-5-25	♦SSX	178 -116
SZ1-7.1-10-25		179 - 69
	♦SSX	
SZ1-7.1-20-25		179 - 70
	♦SSX	
SZ1-7.1-5-25	♦SSX	179 - 68
SZ1-7.7-10-25		181 - 33
	♦SSX	
SZ1-7.7-20-25		181 - 34
	♦SSX	
SZ1-7.7-5-25	♦SSX	181 - 32
SZ1-8.2-10-25		182 -117
	♦SSX	
SZ1-8.2-20-25		182 -127
	♦SSX	
SZ1-8.2-5-25	♦SSX	182 - 93
SZ1-9.1-10-1	♦SSX	185 -155
SZ1-9.1-10-25		185 -145
	♦SSX	
SZ1-9.1-20-25		185 -156
	♦SSX	
SZ1-9.1-5-1	♦SSX	185 -125
SZ1-9.1-5-25	♦SSX	185 -126
SZ1-10-10-1	♦SSX	188 - 3
SZ1-10-10-25	♦SSX	188 - 4
SZ1-10-20-1	♦SSX	188 - 14
SZ1-10-20-25	♦SSX	188 - 15
SZ1-10-5-1	♦SSX	187 -185
SZ1-10-5-25	♦SSX	187 -186
SZ1-11-10-1	♦SSX	189 -118
SZ1-11-10-25	♦SSX	189 -119
SZ1-11-20-1	♦SSX	189 -128
SZ1-11-20-25	♦SSX	189 -129
SZ1-11-5-1	♦SSX	189 - 98
SZ1-11-5-25	♦SSX	189 - 99
SZ1-12-10-1	♦SSX	191 - 92
SZ1-12-10-25	♦SSX	191 - 93
SZ1-12-20-1	♦SSX	191 -103
SZ1-12-20-25	♦SSX	191 -104
SZ1-12-5-1	♦SSX	191 - 67
SZ1-12-5-25	♦SSX	191 - 68
SZ1-13-10-1	♦SSX	193 - 36
SZ1-13-10-25	♦SSX	193 - 37
SZ1-13-20-1	♦SSX	193 - 47
SZ1-13-20-25	♦SSX	193 - 48
SZ1-13-5-1	♦SSX	193 - 15
SZ1-13-5-25	♦SSX	193 - 16
SZ1-14-10-1	♦SSX	194 - 15
SZ1-14-10-25	♦SSX	194 - 16
SZ1-14-20-1	♦SSX	194 - 18
SZ1-14-20-25	♦SSX	194 - 19
SZ1-14-5-1	♦SSX	194 - 9
SZ1-14-5-25	♦SSX	194 - 10
SZ1-15-10-1	♦SSX	195 - 91
SZ1-15-10-25	♦SSX	195 - 92
SZ1-15-20-1	♦SSX	195 -102
SZ1-15-20-25	♦SSX	195 -103
SZ1-15-5-1	♦SSX	195 - 65
SZ1-15-5-25	♦SSX	195 - 66
SZ1-16-10-1	♦SSX	196 -180
SZ1-16-10-25	♦SSX	196 -181
SZ1-16-20-1	♦SSX	196 -191
SZ1-16-20-25	♦SSX	196 -192
SZ1-16-5-1	♦SSX	196 -158
SZ1-16-5-25	♦SSX	196 -159
SZ1-17-10-1	♦SSX	197 -134
SZ1-17-10-25	♦SSX	197 -135
SZ1-17-20-1	♦SSX	197 -136
SZ1-17-20-25	♦SSX	197 -137
SZ1-17-5-1	♦SSX	197 -130
SZ1-17-5-25	♦SSX	197 -131
SZ1-18-10-1	♦SSX	198 -199
SZ1-18-10-25	♦SSX	198 -200
SZ1-18-20-1	♦SSX	199 - 1
SZ1-18-20-25	♦SSX	199 - 2
SZ1-18-5-1	♦SSX	198 -174
SZ1-18-5-25	♦SSX	198 -175
SZ1-20-10-1	♦SSX	200 -189
SZ1-20-10-25	♦SSX	200 -190
SZ1-20-20-1	♦SSX	200 -200
SZ1-20-20-25	♦SSX	200 -201
SZ1-20-5-1	♦SSX	200 -164
SZ1-20-5-25	♦SSX	200 -165
SZ1-22-10-1	♦SSX	202 - 89
SZ1-22-10-25	♦SSX	202 - 90
SZ1-22-20-1	♦SSX	202 -100
SZ1-22-20-25	♦SSX	202 -101
SZ1-22-5-1	♦SSX	202 - 65
SZ1-22-5-25	♦SSX	202 - 66
SZ1-24-10-1	♦SSX	203 -184
SZ1-24-10-25	♦SSX	203 -185
SZ1-24-20-1	♦SSX	203 -195
SZ1-24-20-25	♦SSX	203 -196
SZ1-24-5-1	♦SSX	203 -163
SZ1-24-5-25	♦SSX	203 -164
SZ1-27-10-1	♦SSX	205 -127
SZ1-27-10-25	♦SSX	205 -128
SZ1-27-20-1	♦SSX	205 -138
SZ1-27-20-25	♦SSX	205 -139
SZ1-27-5-1	♦SSX	205 -101

Δ-Registered with JEDEC by this manufacturer

♦-Mfr's data sheet available in microfilm service

1. TYPE No. CROSS INDEX

IN TYPE NUMBER SEQUENCE

TYPE No.	MFRS	Pg&Line
SZ1-27-5-25	♦SSX	205 -102
SZ1-30-10-1	♦SSX	207 - 51
SZ1-30-10-25	♦SSX	207 - 52
SZ1-30-20-1	♦SSX	207 - 62
SZ1-30-20-25	♦SSX	207 - 63
SZ1-30-5-1	♦SSX	207 - 26
SZ1-30-5-25	♦SSX	207 - 27
SZ1-33-10-1	♦SSX	208 -144
SZ1-33-10-25	♦SSX	208 -145
SZ1-33-20-1	♦SSX	208 -155
SZ1-33-20-25	♦SSX	208 -156
SZ1-33-5-1	♦SSX	208 -120
SZ1-33-5-25	♦SSX	208 -121
SZ1-36-10-1	♦SSX	209 -200
SZ1-36-10-25	♦SSX	209 -201
SZ1-36-20-1	♦SSX	210 - 7
SZ1-36-20-25	♦SSX	210 - 8
SZ1-36-5-1	♦SSX	209 -184
SZ1-36-5-25	♦SSX	209 -185
SZ1-39-10-1	♦SSX	211 - 35
SZ1-39-10-25	♦SSX	211 - 36
SZ1-39-20-1	♦SSX	211 - 44
SZ1-39-20-25	♦SSX	211 - 45
SZ1-39-5-1	♦SSX	211 - 19
SZ1-39-5-25	♦SSX	211 - 20
SZ1-43-10-1	♦SSX	212 - 44
SZ1-43-10-25	♦SSX	212 - 45
SZ1-43-20-1	♦SSX	212 - 53
SZ1-43-20-25	♦SSX	212 - 54
SZ1-43-5-1	♦SSX	212 - 29
SZ1-43-5-25	♦SSX	212 - 30
SZ1-47-10-1	♦SSX	213 - 60
SZ1-47-10-25	♦SSX	213 - 61
SZ1-47-20-1	♦SSX	213 - 69
SZ1-47-20-25	♦SSX	213 - 70
SZ1-47-5-1	♦SSX	213 - 44
SZ1-47-5-25	♦SSX	213 - 45
SZ1-51-10-1	♦SSX	214 - 55
SZ1-51-10-25	♦SSX	214 - 56
SZ1-51-20-1	♦SSX	214 - 64
SZ1-51-20-25	♦SSX	214 - 65
SZ1-51-5-1	♦SSX	214 - 41
SZ1-51-5-25	♦SSX	214 - 42
SZ1-56-10-1	♦SSX	215 - 44
SZ1-56-10-25	♦SSX	215 - 45
SZ1-56-20-1	♦SSX	215 - 54
SZ1-56-20-25	♦SSX	215 - 55
SZ1-56-5-1	♦SSX	215 - 27
SZ1-56-5-25	♦SSX	215 - 28
SZ1-62-10-1	♦SSX	216 - 49
SZ1-62-10-25	♦SSX	216 - 50
SZ1-62-20-1	♦SSX	216 - 58
SZ1-62-20-25	♦SSX	216 - 59
SZ1-62-5-1	♦SSX	216 - 34
SZ1-62-5-25	♦SSX	216 - 35
SZ1-68-10-1	♦SSX	217 - 30
SZ1-68-10-25	♦SSX	217 - 31
SZ1-68-20-1	♦SSX	217 - 39
SZ1-68-20-25	♦SSX	217 - 40
SZ1-68-5-1	♦SSX	217 - 14
SZ1-68-5-25	♦SSX	217 - 15
SZ1-75-10-1	♦SSX	218 - 12
SZ1-75-10-25	♦SSX	218 - 13
SZ1-75-20-1	♦SSX	218 - 22
SZ1-75-20-25	♦SSX	218 - 23
SZ1-75-5-1	♦SSX	217 -196
SZ1-75-5-25	♦SSX	217 -197
SZ1-82-10-1	♦SSX	218 -192
SZ1-82-10-25	♦SSX	218 -193
SZ1-82-20-1	♦SSX	219 - 2
SZ1-82-20-25	♦SSX	219 - 3
SZ1-82-5-1	♦SSX	218 -176
SZ1-82-5-25	♦SSX	218 -177
SZ1-91-10-1	♦SSX	219 -171
SZ1-91-10-25	♦SSX	219 -172
SZ1-91-20-1	♦SSX	219 -180
SZ1-91-20-25	♦SSX	219 -181
SZ1-91-5-1	♦SSX	219 -156
SZ1-91-5-25	♦SSX	219 -157
SZ1-100-10-1	♦SSX	220 -132
SZ1-100-10-25	♦SSX	220 -133
SZ1-100-20-1	♦SSX	220 -142
SZ1-100-20-25	♦SSX	220 -143
SZ1-100-5-1	♦SSX	220 -115
SZ1-100-5-25	♦SSX	220 -116
SZ1-110-10-1	♦SSX	221 - 94
SZ1-110-10-25	♦SSX	221 - 95
SZ1-110-20-1	♦SSX	221 -105
SZ1-110-20-25	♦SSX	221 -106
SZ1-110-5-1	♦SSX	221 - 78
SZ1-110-5-25	♦SSX	221 - 79
SZ1-120-10-1	♦SSX	222 - 45
SZ1-120-10-25	♦SSX	222 - 46
SZ1-120-20-1	♦SSX	222 - 58
SZ1-120-5-1	♦SSX	222 - 28
SZ1-120-5-25	♦SSX	222 - 29
SZ1-130-10-1	♦SSX	222 -189
SZ1-130-10-25	♦SSX	223 - 1
SZ1-130-20-1	♦SSX	223 - 12
SZ1-130-20-25	♦SSX	223 - 13
SZ1-130-5-1	♦SSX	222 -173
SZ1-130-5-25	♦SSX	222 -174
SZ1-140-10-1	♦SSX	223 -101
SZ1-140-10-25	♦SSX	223 -102
SZ1-140-20-1	♦SSX	223 -105
SZ1-140-20-25	♦SSX	223 -106
SZ1-140-5-1	♦SSX	223 - 96
SZ1-140-5-25	♦SSX	223 - 97
SZ1-150-10-1	♦SSX	224 - 33
SZ1-150-10-25	♦SSX	224 - 34
SZ1-150-20-1	♦SSX	224 - 45
SZ1-150-20-25	♦SSX	224 - 46
SZ1-150-5-1	♦SSX	224 - 17
SZ1-150-5-25	♦SSX	224 - 18
SZ1-160-10-1	♦SSX	224 -163
SZ1-160-10-25	♦SSX	224 -164
SZ1-160-20-1	♦SSX	224 -175
SZ1-160-20-25	♦SSX	224 -176
SZ1-160-5-1	♦SSX	224 -149
SZ1-160-5-25	♦SSX	224 -150
SZ1-170-10-1	♦SSX	225 - 69
SZ1-170-10-25	♦SSX	225 - 70
SZ1-170-20-1	♦SSX	225 - 74
SZ1-170-20-25	♦SSX	225 - 75
SZ1-170-5-1	♦SSX	225 - 64
SZ1-170-5-25	♦SSX	225 - 65
SZ1-180-10-1	♦SSX	225 -172
SZ1-180-10-25	♦SSX	225 -173
SZ1-180-20-1	♦SSX	226 - 4
SZ1-180-20-25	♦SSX	226 - 5
SZ1-180-5-1	♦SSX	225 -155
SZ1-180-5-25	♦SSX	225 -156
SZ1-190-10-1	♦SSX	226 - 85
SZ1-190-20-1	♦SSX	226 - 88
SZ1-200-10-1	♦SSX	226 -174
SZ1-200-10-25	♦SSX	226 -175
SZ1-200-20-1	♦SSX	226 -186
SZ1-200-20-25	♦SSX	227 - 1
SZ1-200-5-1	♦SSX	226 -159
SZ1-200-5-25	♦SSX	226 -160
SZ1.5-10-10-1	♦SSX	188 - 44
SZ1.5-10-20-1	♦SSX	188 - 47
SZ1.5-10-5-1	♦SSX	188 - 40
SZ1.5-100-10-1	♦SSX	220 -165
SZ1.5-100-20-1	♦SSX	220 -168
SZ1.5-100-5-1	♦SSX	220 -162
SZ1.5-11-10-1	♦SSX	189 -157
SZ1.5-11-20-1	♦SSX	189 -160
SZ1.5-11-5-1	♦SSX	189 -153
SZ1.5-110-10-1	♦SSX	221 -125
SZ1.5-110-20-1	♦SSX	221 -128
SZ1.5-110-5-1	♦SSX	221 -122
SZ1.5-12-10-1	♦SSX	191 -132
SZ1.5-12-20-1	♦SSX	191 -135
SZ1.5-12-5-1	♦SSX	191 -128
SZ1.5-120-10-1	♦SSX	222 - 79
SZ1.5-120-20-1	♦SSX	222 - 82
SZ1.5-120-5-1	♦SSX	222 - 76
SZ1.5-13-10-1	♦SSX	193 - 74
SZ1.5-13-20-1	♦SSX	193 - 77
SZ1.5-13-5-1	♦SSX	193 - 70
SZ1.5-130-10-1	♦SSX	223 - 32
SZ1.5-130-20-1	♦SSX	223 - 35
SZ1.5-130-5-1	♦SSX	223 - 29
SZ1.5-14-10-1	♦SSX	194 - 21
SZ1.5-14-20-1	♦SSX	194 - 22
SZ1.5-14-5-1	♦SSX	194 - 20
SZ1.5-140-10-1	♦SSX	223 -108
SZ1.5-140-20-1	♦SSX	223 -109
SZ1.5-140-5-1	♦SSX	223 -107
SZ1.5-15-10-1	♦SSX	195 -129
SZ1.5-15-20-1	♦SSX	195 -131
SZ1.5-15-5-1	♦SSX	195 -125
SZ1.5-150-10-1	♦SSX	224 - 66
SZ1.5-150-20-1	♦SSX	224 - 69
SZ1.5-150-5-1	♦SSX	224 - 63
SZ1.5-16-10-1	♦SSX	197 - 11
SZ1.5-16-20-1	♦SSX	197 - 14
SZ1.5-16-5-1	♦SSX	197 - 8
SZ1.5-160-10-1	♦SSX	225 - 3
SZ1.5-160-20-1	♦SSX	225 - 7
SZ1.5-160-5-1	♦SSX	224 -189
SZ1.5-17-10-1	♦SSX	197 -139
SZ1.5-17-20-1	♦SSX	197 -140
SZ1.5-17-5-1	♦SSX	197 -138
SZ1.5-170-10-1	♦SSX	225 - 78
SZ1.5-170-20-1	♦SSX	225 - 80
SZ1.5-170-5-1	♦SSX	225 - 76
SZ1.5-18-10-1	♦SSX	199 - 27
SZ1.5-18-20-1	♦SSX	199 - 30
SZ1.5-18-5-1	♦SSX	199 - 24
SZ1.5-180-10-1	♦SSX	226 - 25
SZ1.5-180-20-1	♦SSX	226 - 29
SZ1.5-180-5-1	♦SSX	226 - 21
SZ1.5-190-10-1	♦SSX	226 - 92
SZ1.5-190-20-1	♦SSX	226 - 89
SZ1.5-190-5-1	♦SSX	226 - 90
SZ1.5-20-10-1	♦SSX	201 - 20
SZ1.5-20-20-1	♦SSX	201 - 23
SZ1.5-20-5-1	♦SSX	201 - 17
SZ1.5-200-10-1	♦SSX	227 - 19
SZ1.5-200-20-1	♦SSX	227 - 8
SZ1.5-200-5-1	♦SSX	227 - 15
SZ1.5-22-10-1	♦SSX	202 -127
SZ1.5-22-20-1	♦SSX	202 -130
SZ1.5-22-5-1	♦SSX	202 -124
SZ1.5-24-10-1	♦SSX	204 - 13
SZ1.5-24-20-1	♦SSX	204 - 16
SZ1.5-24-5-1	♦SSX	204 - 10
SZ1.5-27-10-1	♦SSX	205 -167
SZ1.5-27-20-1	♦SSX	205 -170
SZ1.5-27-5-1	♦SSX	205 -164
SZ1.5-30-10-1	♦SSX	207 - 91
SZ1.5-30-20-1	♦SSX	207 - 94
SZ1.5-30-5-1	♦SSX	207 - 88
SZ1.5-33-10-1	♦SSX	208 -184
SZ1.5-33-20-1	♦SSX	208 -187
SZ1.5-33-5-1	♦SSX	208 -181
SZ1.5-36-10-1	♦SSX	210 - 33
SZ1.5-36-20-1	♦SSX	210 - 36
SZ1.5-36-5-1	♦SSX	210 - 30
SZ1.5-39-10-1	♦SSX	211 - 70
SZ1.5-39-20-1	♦SSX	211 - 73
SZ1.5-39-5-1	♦SSX	211 - 67
SZ1.5-43-10-1	♦SSX	212 - 81
SZ1.5-43-20-1	♦SSX	212 - 84
SZ1.5-43-5-1	♦SSX	212 - 78
SZ1.5-47-10-1	♦SSX	213 - 98
SZ1.5-47-20-1	♦SSX	213 -101
SZ1.5-47-5-1	♦SSX	213 - 95
SZ1.5-51-10-1	♦SSX	214 - 91
SZ1.5-51-20-1	♦SSX	214 - 94
SZ1.5-51-5-1	♦SSX	214 - 88
SZ1.5-56-10-1	♦SSX	215 - 80
SZ1.5-56-20-1	♦SSX	215 - 83
SZ1.5-56-5-1	♦SSX	215 - 77
SZ1.5-62-10-1	♦SSX	216 - 84
SZ1.5-62-20-1	♦SSX	216 - 87
SZ1.5-62-5-1	♦SSX	216 - 81
SZ1.5-68-10-1	♦SSX	217 - 65
SZ1.5-68-20-1	♦SSX	217 - 68
SZ1.5-68-5-1	♦SSX	217 - 62
SZ1.5-75-10-1	♦SSX	218 - 48
SZ1.5-75-20-1	♦SSX	218 - 51
SZ1.5-75-5-1	♦SSX	218 - 45
SZ1.5-82-10-1	♦SSX	219 - 24
SZ1.5-82-20-1	♦SSX	219 - 27
SZ1.5-82-5-1	♦SSX	219 - 21
SZ1.5-91-10-1	♦SSX	220 - 3
SZ1.5-91-20-1	♦SSX	220 - 6
SZ1.5-91-5-1	♦SSX	219 -199
SZ1.5-9.1-10-1	♦SSX	185 -180
SZ1.5-9.1-20-1	♦SSX	185 -183
SZ1.5-9.1-5-1	♦SSX	185 -177
SZ2.4	♦SCH	164 - 70
SZ2.7	♦SCH	164 -192
SZ3-1.8-10-25	♦SSX	163 -116
SZ3-1.8-20-25	♦SSX	163 -117
SZ3-1.8-5-25	♦SSX	163 -115
SZ3-2.0-10-25	♦SSX	163 -150
SZ3-2.0-20-25	♦SSX	163 -151
SZ3-2.0-5-25	♦SSX	163 -149
SZ3-2.2-10-25	♦SSX	164 - 2
SZ3-2.2-20-25	♦SSX	164 - 3
SZ3-2.2-5-25	♦SSX	164 - 1
SZ3-2.4-10-25	♦SSX	164 - 76
SZ3-2.4-20-25	♦SSX	164 - 77
SZ3-2.4-5-25	♦SSX	164 - 75
SZ3-2.7-10-25	♦SSX	165 - 2
SZ3-2.7-20-25	♦SSX	165 - 3
SZ3-2.7-5-25	♦SSX	165 - 1
SZ3-3.0-10-25	♦SSX	165 -144
SZ3-3.0-20-25	♦SSX	165 -145
SZ3-3.0-5-25	♦SSX	165 -143
SZ3-3.3-10-25	♦SSX	166 -112
SZ3-3.3-20-25	♦SSX	166 -113
SZ3-3.3-5-25	♦SSX	166 -111
SZ3-3.6-10-25	♦SSX	167 - 83
SZ3-3.6-20-25	♦SSX	167 - 84
SZ3-3.6-5-25	♦SSX	167 - 82
SZ3-3.9-10-25	♦SSX	168 - 77
SZ3-3.9-20-25	♦SSX	168 - 78
SZ3-3.9-5-25	♦SSX	168 - 76
SZ3-4.3-10-25	♦SSX	169 - 95
SZ3-4.3-20-25	♦SSX	169 - 96
SZ3-4.3-5-25	♦SSX	169 - 94
SZ3-4.7-10-25	♦SSX	170 -154
SZ3-4.7-20-25	♦SSX	170 -155
SZ3-4.7-5-25	♦SSX	170 -153
SZ3-5.1-10-25	♦SSX	172 - 26
SZ3-5.1-20-25	♦SSX	172 - 27
SZ3-5.1-5-25	♦SSX	172 - 25
SZ3-5.6-10-25	♦SSX	173 -126
SZ3-5.6-20-25	♦SSX	173 -127
SZ3-5.6-5-25	♦SSX	173 -125
SZ3-6.2-10-25	♦SSX	175 -190
SZ3-6.2-20-25	♦SSX	175 -191
SZ3-6.2-5-25	♦SSX	175 -189
SZ3-6.8-10-25	♦SSX	178 -203
SZ3-6.8-20-25	♦SSX	178 -204
SZ3-6.8-5-25	♦SSX	178 -202
SZ3-7.1-10-25	♦SSX	179 - 73
SZ3-7.1-20-25	♦SSX	179 - 74
SZ3-7.1-5-25	♦SSX	179 - 72
SZ3-7.7-10-25	♦SSX	181 - 36
SZ3-7.7-20-25	♦SSX	181 - 37
SZ3-7.7-5-25	♦SSX	181 - 35
SZ3-8.2-10-25	♦SSX	182 -187
SZ3-8.2-20-25	♦SSX	182 -188
SZ3-8.2-5-25	♦SSX	182 -186
SZ3-9.1-10-1	♦SSX	186 - 19
SZ3-9.1-10-25	♦SSX	186 - 20
SZ3-9.1-20-1	♦SSX	186 - 21
SZ3-9.1-20-25	♦SSX	186 - 22
SZ3-9.1-5-1	♦SSX	186 - 17
SZ3-9.1-5-25	♦SSX	186 - 18
SZ3-10-10-1	♦SSX	188 - 89
SZ3-10-10-25	♦SSX	188 - 90
SZ3-10-20-1	♦SSX	188 - 91
SZ3-10-20-25	♦SSX	188 - 92
SZ3-10-5-1	♦SSX	188 - 87
SZ3-10-5-25	♦SSX	188 - 88
SZ3-11-10-1	♦SSX	189 -197
SZ3-11-10-25	♦SSX	189 -198
SZ3-11-20-1	♦SSX	189 -199
SZ3-11-20-25	♦SSX	189 -200
SZ3-11-5-1	♦SSX	189 -195
SZ3-11-5-25	♦SSX	189 -196
SZ3-12-10-1	♦SSX	191 -177
SZ3-12-10-25	♦SSX	191 -178
SZ3-12-20-1	♦SSX	191 -179
SZ3-12-20-25	♦SSX	191 -180
SZ3-12-5-1	♦SSX	191 -175
SZ3-12-5-25	♦SSX	191 -176
SZ3-13-10-1	♦SSX	193 -116
SZ3-13-10-25	♦SSX	193 -117
SZ3-13-20-1	♦SSX	193 -118
SZ3-13-20-25	♦SSX	193 -119
SZ3-13-5-1	♦SSX	193 -114
SZ3-13-5-25	♦SSX	193 -115
SZ3-14-10-1	♦SSX	194 - 53
SZ3-14-10-25	♦SSX	194 - 54
SZ3-14-20-1	♦SSX	194 - 55
SZ3-14-20-25	♦SSX	194 - 56
SZ3-14-5-1	♦SSX	194 - 51
SZ3-14-5-25	♦SSX	194 - 52
SZ3-15-10-1	♦SSX	195 -173
SZ3-15-10-25	♦SSX	195 -174
SZ3-15-20-1	♦SSX	195 -175
SZ3-15-20-25	♦SSX	195 -176
SZ3-15-5-1	♦SSX	195 -171
SZ3-15-5-25	♦SSX	195 -172
SZ3-16-10-1	♦SSX	197 - 47
SZ3-16-10-25	♦SSX	197 - 48
SZ3-16-20-1	♦SSX	197 - 49
SZ3-16-20-25	♦SSX	197 - 50
SZ3-16-5-1	♦SSX	197 - 45
SZ3-16-5-25	♦SSX	197 - 46
SZ3-17-10-1	♦SSX	197 -161
SZ3-17-10-25	♦SSX	197 -162
SZ3-17-20-1	♦SSX	197 -163
SZ3-17-20-25	♦SSX	197 -164
SZ3-17-5-1	♦SSX	197 -159
SZ3-17-5-25	♦SSX	197 -160
SZ3-18-10-1	♦SSX	199 - 73
SZ3-18-10-25	♦SSX	199 - 74
SZ3-18-20-1	♦SSX	199 - 75
SZ3-18-20-25	♦SSX	199 - 76
SZ3-18-5-1	♦SSX	199 - 71
SZ3-18-5-25	♦SSX	199 - 72
SZ3-20-10-1	♦SSX	201 - 65
SZ3-20-10-25	♦SSX	201 - 66
SZ3-20-20-1	♦SSX	201 - 67
SZ3-20-20-25	♦SSX	201 - 68
SZ3-20-5-1	♦SSX	201 - 63
SZ3-20-5-25	♦SSX	201 - 64
SZ3-22-10-1	♦SSX	202 -170
SZ3-22-10-25	♦SSX	202 -171
SZ3-22-20-1	♦SSX	202 -172
SZ3-22-20-25	♦SSX	202 -173
SZ3-22-5-1	♦SSX	202 -168
SZ3-22-5-25	♦SSX	202 -169
SZ3-24-10-1	♦SSX	204 - 57
SZ3-24-10-25	♦SSX	204 - 58
SZ3-24-20-1	♦SSX	204 - 59
SZ3-24-20-25	♦SSX	204 - 60
SZ3-24-5-1	♦SSX	204 - 55
SZ3-24-5-25	♦SSX	204 - 56
SZ3-27-10-1	♦SSX	206 - 8
SZ3-27-10-25	♦SSX	206 - 9
SZ3-27-20-1	♦SSX	206 - 10
SZ3-27-20-25	♦SSX	206 - 11
SZ3-27-5-1	♦SSX	206 - 6
SZ3-27-5-25	♦SSX	206 - 7
SZ3-30-10-1	♦SSX	207 -136
SZ3-30-10-25	♦SSX	207 -137
SZ3-30-20-1	♦SSX	207 -138
SZ3-30-20-25	♦SSX	207 -139
SZ3-30-5-1	♦SSX	207 -134
SZ3-30-5-25	♦SSX	207 -135
SZ3-33-10-1	♦SSX	209 - 24
SZ3-33-10-25	♦SSX	209 - 25
SZ3-33-20-1	♦SSX	209 - 26
SZ3-33-20-25	♦SSX	209 - 27
SZ3-33-5-1	♦SSX	209 - 22
SZ3-33-5-25	♦SSX	209 - 23
SZ3-36-10-1	♦SSX	210 - 78
SZ3-36-10-25	♦SSX	210 - 79
SZ3-36-20-1	♦SSX	210 - 80
SZ3-36-20-25	♦SSX	210 - 81
SZ3-36-5-1	♦SSX	210 - 76
SZ3-36-5-25	♦SSX	210 - 77
SZ3-39-10-1	♦SSX	211 -110
SZ3-39-10-25	♦SSX	211 -111
SZ3-39-20-1	♦SSX	211 -112
SZ3-39-20-25	♦SSX	211 -113
SZ3-39-5-1	♦SSX	211 -108
SZ3-39-5-25	♦SSX	211 -109
SZ3-43-10-1	♦SSX	212 -121
SZ3-43-10-25	♦SSX	212 -122
SZ3-43-20-1	♦SSX	212 -123
SZ3-43-20-25	♦SSX	212 -124
SZ3-43-5-1	♦SSX	212 -119

Δ-Registered with JEDEC by this manufacturer

♦-Mfr's data sheet available in microfilm service

1. TYPE No. CROSS INDEX

IN TYPE NUMBER SEQUENCE

TYPE No.	MFRS	Pg&Line
SZ3-43-5-25	♦SSX	212 -120
SZ3-47-10-1	♦SSX	213 -138
SZ3-47-10-25	♦SSX	213 -139
SZ3-47-20-1	♦SSX	213 -140
SZ3-47-20-25	♦SSX	213 -141
SZ3-47-5-1	♦SSX	213 -136
SZ3-47-5-25	♦SSX	213 -137
SZ3-51-10-1	♦SSX	214 -133
SZ3-51-10-25	♦SSX	214 -134
SZ3-51-20-1	♦SSX	214 -135
SZ3-51-20-25	♦SSX	214 -136
SZ3-51-5-1	♦SSX	214 -131
SZ3-51-5-25	♦SSX	214 -132
SZ3-56-10-1	♦SSX	215 -125
SZ3-56-10-25	♦SSX	215 -126
SZ3-56-20-1	♦SSX	215 -127
SZ3-56-20-25	♦SSX	215 -128
SZ3-56-5-25	♦SSX	215 -124
SZ3-62-10-1	♦SSX	216 -126
SZ3-62-10-25	♦SSX	216 -127
SZ3-62-20-1	♦SSX	216 -128
SZ3-62-20-25	♦SSX	216 -129
SZ3-62-5-1	♦SSX	216 -124
SZ3-62-5-25	♦SSX	216 -125
SZ3-68-10-1	♦SSX	217 -107
SZ3-68-10-25	♦SSX	217 -108
SZ3-68-20-1	♦SSX	217 -109
SZ3-68-20-25	♦SSX	217 -110
SZ3-68-5-1	♦SSX	217 -105
SZ3-68-5-25	♦SSX	217 -106
SZ3-75-10-1	♦SSX	218 - 93
SZ3-75-10-25	♦SSX	218 - 94
SZ3-75-20-1	♦SSX	218 - 95
SZ3-75-20-25	♦SSX	218 - 96
SZ3-75-5-1	♦SSX	218 - 91
SZ3-75-5-25	♦SSX	218 - 92
SZ3-82-10-1	♦SSX	219 - 64
SZ3-82-10-25	♦SSX	219 - 65
SZ3-82-20-1	♦SSX	219 - 66
SZ3-82-20-25	♦SSX	219 - 67
SZ3-82-5-1	♦SSX	219 - 62
SZ3-82-5-25	♦SSX	219 - 63
SZ3-91-10-1	♦SSX	220 - 43
SZ3-91-10-25	♦SSX	220 - 44
SZ3-91-20-1	♦SSX	220 - 45
SZ3-91-20-25	♦SSX	220 - 46
SZ3-91-5-1	♦SSX	220 - 41
SZ3-91-5-25	♦SSX	220 - 42
SZ3-100-10-1	♦SSX	221 - 11
SZ3-100-10-25	♦SSX	221 - 12
SZ3-100-20-1	♦SSX	221 - 13
SZ3-100-20-25	♦SSX	221 - 14
SZ3-100-5-1	♦SSX	221 - 9
SZ3-100-5-25	♦SSX	221 - 10
SZ3-110-10-1	♦SSX	221 -165
SZ3-110-10-25	♦SSX	221 -166
SZ3-110-20-1	♦SSX	221 -167
SZ3-110-20-25	♦SSX	221 -168
SZ3-110-5-1	♦SSX	221 -163
SZ3-110-5-25	♦SSX	221 -164
SZ3-120-10-1	♦SSX	222 -122
SZ3-120-10-25	♦SSX	222 -123
SZ3-120-20-1	♦SSX	222 -124
SZ3-120-20-25	♦SSX	222 -125
SZ3-120-5-1	♦SSX	222 -120
SZ3-120-5-25	♦SSX	222 -121
SZ3-130-10-1	♦SSX	223 - 72
SZ3-130-10-25	♦SSX	223 - 73
SZ3-130-20-1	♦SSX	223 - 74
SZ3-130-20-25	♦SSX	223 - 75
SZ3-130-5-1	♦SSX	223 - 70
SZ3-130-5-25	♦SSX	223 - 71
SZ3-140-10-1	♦SSX	223 -138
SZ3-140-10-25	♦SSX	223 -139
SZ3-140-20-1	♦SSX	223 -140
SZ3-140-20-25	♦SSX	223 -141
SZ3-140-5-1	♦SSX	223 -136
SZ3-140-5-25	♦SSX	223 -137
SZ3-150-10-1	♦SSX	224 -105
SZ3-150-10-25	♦SSX	224 -106
SZ3-150-20-1	♦SSX	224 -107
SZ3-150-20-25	♦SSX	224 -108
SZ3-150-5-1	♦SSX	224 -103
SZ3-150-5-25	♦SSX	224 -104
SZ3-160-10-1	♦SSX	225 - 43
SZ3-160-10-25	♦SSX	225 - 44
SZ3-160-20-1	♦SSX	225 - 45
SZ3-160-20-25	♦SSX	225 - 46
SZ3-160-5-1	♦SSX	225 - 41
SZ3-160-5-25	♦SSX	225 - 42
SZ3-170-10-1	♦SSX	225 -101
SZ3-170-10-25	♦SSX	225 -102
SZ3-170-20-1	♦SSX	225 -103
SZ3-170-20-25	♦SSX	225 -104
SZ3-170-5-1	♦SSX	225 - 99
SZ3-170-5-25	♦SSX	225 -100
SZ3-180-10-1	♦SSX	226 - 66
SZ3-180-10-25	♦SSX	226 - 67
SZ3-180-20-1	♦SSX	226 - 68
SZ3-180-20-25	♦SSX	226 - 69
SZ3-180-5-1	♦SSX	226 - 64
SZ3-180-5-25	♦SSX	226 - 65
SZ3-190-10-1	♦SSX	226 -113
SZ3-190-20-1	♦SSX	226 -114
SZ3-190-5-1	♦SSX	226 -112
SZ3-200-10-1	♦SSX	227 - 61
SZ3-200-10-25	♦SSX	227 - 62
SZ3-200-20-1	♦SSX	227 - 63
SZ3-200-20-25	♦SSX	227 - 64
SZ3-200-5-1	♦SSX	227 - 59
SZ3-200-5-25	♦SSX	227 - 60
SZ3.0	♦SCH	165 -132
SZ3.3	♦SCH	166 - 69
SZ3.6	♦SCH	167 - 34
SZ3.9	♦SCH	168 - 13
SZ4.3	♦SCH	169 - 36
SZ4.7	♦SCH	170 - 87
SZ5	SIEG	170 -200
SZ5.1	♦SCH	171 -169
	♦SELI	
SZ5.6	♦SCH	173 - 52
	♦SELI	
SZ6	SIEG	173 -199
SZ6.2	♦SCH	175 -114
	♦SELI	
SZ6.8	♦SCH	178 - 92
	♦SELI	
SZ7	SIEG	179 - 18
SZ7.5	♦SCH	180 - 86
	♦SELI	
SZ8	SIEG	181 - 65
SZ8.2	♦SCH	182 - 69
	♦SELI	
SZ9	SIEG	184 - 28
SZ9.1	♦SCH	185 -103
	♦SELI	
SZ10	SELI	187 - 3
	SIEG	
SZ10C	MULB	188 - 41
PHIN	RTCF	
	VALG	
SZ10.0	♦SCH	187 -187
SZ11	♦SELI	188 -172
	SIEG	
SZ11C	MULB	189 -154
PHIN	RTCF	
	VALG	
SZ11.0	♦SCH	189 - 74
SZ12	♦SELI	190 -127
	SIEG	
SZ12C	MULB	191 -129
PHIN	RTCF	
	VALG	
SZ12.0	♦SCH	191 - 38
SZ13	SIEG	192 -109
SZ13C	MULB	193 - 71
PHIN	RTCF	
	VALG	
SZ13.0	♦SCH	192 -207
SZ14	SIEG	193 -167
SZ15	SIEG	194 -120
SZ15B	MULB	384 - 42
PHIN	RTCF	
	VALG	
SZ15C	MULB	195 -126
PHIN	RTCF	
	VALG	
SZ15.0	♦SCH	195 - 39
SZ16	SIEG	196 - 30
SZ16-1.8-10-25	♦SSX	377 - 5
SZ16-1.8-20-25	♦SSX	377 - 6
SZ16-1.8-5-25	♦SSX	377 - 4
SZ16-2.0-10-25	♦SSX	377 - 11
SZ16-2.0-20-25	♦SSX	377 - 12
SZ16-2.0-5-25	♦SSX	377 - 10
SZ16-2.2-10-25	♦SSX	377 - 18
SZ16-2.2-20-25	♦SSX	377 - 19
SZ16-2.2-5-25	♦SSX	377 - 17
SZ16-2.4-10-25	♦SSX	377 - 24
SZ16-2.4-5-25	♦SSX	377 - 23
SZ16-2.7-10-25	♦SSX	377 - 29
SZ16-2.7-20-25	♦SSX	377 - 30
SZ16-2.7-5-25	♦SSX	377 - 28
SZ16-3.0-10-25	♦SSX	377 - 38
SZ16-3.0-20-25	♦SSX	377 - 39
SZ16-3.0-5-25	♦SSX	377 - 35
SZ16-3.3-10-25	♦SSX	377 - 58
SZ16-3.3-20-25	♦SSX	377 - 59
SZ16-3.3-5-25	♦SSX	377 - 55
SZ16-3.6-10-25	♦SSX	377 - 80
SZ16-3.6-20-25	♦SSX	377 - 81
SZ16-3.6-5-25	♦SSX	377 - 77
SZ16-3.9-10-25	♦SSX	377 -107
SZ16-3.9-20-25	♦SSX	377 -108
SZ16-3.9-5-25	♦SSX	377 -102
SZ16-4.3-10-25	♦SSX	377 -145
SZ16-4.3-20-25	♦SSX	377 -146
SZ16-4.3-5-25	♦SSX	377 -141
SZ16-4.7-10-25	♦SSX	378 - 28
SZ16-4.7-20-25	♦SSX	378 - 29
SZ16-4.7-5-25	♦SSX	378 - 23
SZ16-5.1-10-25	♦SSX	378 - 71
SZ16-5.1-20-25	♦SSX	378 - 72
SZ16-5.1-5-25	♦SSX	378 - 67
SZ16-5.6-10-25	♦SSX	378 -117
SZ16-5.6-20-25	♦SSX	378 -119
SZ16-5.6-5-25	♦SSX	378 -111
SZ16-6.2-10-25	♦SSX	378 -170
SZ16-6.2-20-25	♦SSX	378 -172
SZ16-6.2-5-25	♦SSX	378 -165
SZ16-6.8-10-25	♦SSX	379 - 63
SZ16-6.8-20-25	♦SSX	379 - 70
SZ16-6.8-5-25	♦SSX	379 - 51
SZ16-7.1-10-25	♦SSX	379 -107
SZ16-7.1-20-25	♦SSX	379 -108
SZ16-7.1-5-25	♦SSX	379 -105
SZ16-7.7-10-25	♦SSX	380 - 26
SZ16-7.7-20-25	♦SSX	380 - 27
SZ16-7.7-5-25	♦SSX	380 - 25
SZ16-8.2-10-25	♦SSX	380 -103
SZ16-8.2-20-25	♦SSX	380 -110
SZ16-8.2-5-25	♦SSX	380 - 91
SZ16-9.1-10-1	♦SSX	381 - 23
SZ16-9.1-10-25	♦SSX	381 - 24
SZ16-9.1-20-1	♦SSX	381 - 30
SZ16-9.1-20-25	♦SSX	381 - 31
SZ16-9.1-5-1	♦SSX	381 - 12
SZ16-9.1-5-25	♦SSX	381 - 13
SZ16-10-10-1	♦SSX	381 -133
SZ16-10-10-25	♦SSX	381 -134
SZ16-10-20-1	♦SSX	381 -141
SZ16-10-20-25	♦SSX	381 -142
SZ16-10-5-1	♦SSX	381 -118
SZ16-10-5-25	♦SSX	381 -119
SZ16-11-10-1	♦SSX	382 - 22
SZ16-11-10-25	♦SSX	382 - 23
SZ16-11-20-1	♦SSX	382 - 29
SZ16-11-20-25	♦SSX	382 - 30
SZ16-11-5-1	♦SSX	382 - 9
SZ16-11-5-25	♦SSX	382 - 10
SZ16-12-10-1	♦SSX	382 -143
SZ16-12-10-25	♦SSX	382 -144
SZ16-12-20-1	♦SSX	382 -151
SZ16-12-20-25	♦SSX	382 -152
SZ16-12-5-1	♦SSX	382 -127
SZ16-12-5-25	♦SSX	382 -128
SZ16-13-10-1	♦SSX	383 - 50
SZ16-13-10-25	♦SSX	383 - 51
SZ16-13-20-1	♦SSX	383 - 58
SZ16-13-20-25	♦SSX	383 - 59
SZ16-13-5-1	♦SSX	383 - 36
SZ16-13-5-25	♦SSX	383 - 37
SZ16-14-10-1	♦SSX	383 -128
SZ16-14-10-25	♦SSX	383 -129
SZ16-14-20-1	♦SSX	383 -134
SZ16-14-20-25	♦SSX	383 -135
SZ16-14-5-1	♦SSX	383 -121
SZ16-14-5-25	♦SSX	383 -122
SZ16-15-10-1	♦SSX	384 - 28
SZ16-15-10-25	♦SSX	384 - 29
SZ16-15-20-1	♦SSX	384 - 36
SZ16-15-20-25	♦SSX	384 - 37
SZ16-15-5-1	♦SSX	384 - 11
SZ16-15-5-25	♦SSX	384 - 12
SZ16-16-10-1	♦SSX	384 -125
SZ16-16-10-25	♦SSX	384 -126
SZ16-16-20-1	♦SSX	384 -133
SZ16-16-20-25	♦SSX	384 -134
SZ16-16-5-1	♦SSX	384 -110
SZ16-16-5-25	♦SSX	384 -111
SZ16-17-10-1	♦SSX	384 -189
SZ16-17-10-25	♦SSX	384 -190
SZ16-17-20-1	♦SSX	384 -193
SZ16-17-20-25	♦SSX	384 -194
SZ16-17-5-1	♦SSX	384 -184
SZ16-17-5-25	♦SSX	384 -185
SZ16-18-10-1	♦SSX	385 - 91
SZ16-18-10-25	♦SSX	385 - 92
SZ16-18-20-1	♦SSX	385 - 99
SZ16-18-20-25	♦SSX	385 -100
SZ16-18-5-1	♦SSX	385 - 73
SZ16-18-5-25	♦SSX	385 - 74
SZ16-20-10-1	♦SSX	386 - 38
SZ16-20-10-25	♦SSX	386 - 39
SZ16-20-20-1	♦SSX	386 - 46
SZ16-20-20-25	♦SSX	386 - 47
SZ16-20-5-1	♦SSX	386 - 23
SZ16-20-5-25	♦SSX	386 - 24
SZ16-22-10-1	♦SSX	386 -145
SZ16-22-10-25	♦SSX	386 -146
SZ16-22-20-1	♦SSX	386 -153
SZ16-22-20-25	♦SSX	386 -154
SZ16-22-5-1	♦SSX	386 -128
SZ16-22-5-25	♦SSX	386 -129
SZ16-24-10-1	♦SSX	387 - 60
SZ16-24-10-25	♦SSX	387 - 61
SZ16-24-20-1	♦SSX	387 - 68
SZ16-24-20-25	♦SSX	387 - 69
SZ16-24-5-1	♦SSX	387 - 45
SZ16-24-5-25	♦SSX	387 - 46
SZ16-27-10-1	♦SSX	388 - 2
SZ16-27-10-25	♦SSX	388 - 3
SZ16-27-20-1	♦SSX	388 - 10
SZ16-27-20-25	♦SSX	388 - 11
SZ16-27-5-1	♦SSX	387 -187
SZ16-27-5-25	♦SSX	387 -188
SZ16-30-10-1	♦SSX	388 -118
SZ16-30-10-25	♦SSX	388 -119
SZ16-30-20-1	♦SSX	388 -126
SZ16-30-20-25	♦SSX	388 -127
SZ16-30-5-1	♦SSX	388 -104
SZ16-30-5-25	♦SSX	388 -105
SZ16-33-10-1	♦SSX	389 - 27
SZ16-33-10-25	♦SSX	389 - 28
SZ16-33-20-1	♦SSX	389 - 35
SZ16-33-20-25	♦SSX	389 - 36
SZ16-33-5-1	♦SSX	389 - 11
SZ16-33-5-25	♦SSX	389 - 12
SZ16-36-10-1	♦SSX	389 -136
SZ16-36-10-25	♦SSX	389 -137
SZ16-36-20-1	♦SSX	389 -144
SZ16-36-20-25	♦SSX	389 -145
SZ16-36-5-1	♦SSX	389 -121
SZ16-36-5-25	♦SSX	389 -122
SZ16-39-10-1	♦SSX	390 - 29
SZ16-39-10-25	♦SSX	390 - 30
SZ16-39-20-1	♦SSX	390 - 36
SZ16-39-20-25	♦SSX	390 - 37
SZ16-39-5-1	♦SSX	390 - 14
SZ16-39-5-25	♦SSX	390 - 15
SZ16-43-10-1	♦SSX	390 -136
SZ16-43-10-25	♦SSX	390 -137
SZ16-43-20-1	♦SSX	390 -143
SZ16-43-20-25	♦SSX	390 -144
SZ16-43-5-1	♦SSX	390 -122
SZ16-43-5-25	♦SSX	390 -123
SZ16-47-10-1	♦SSX	391 - 71
SZ16-47-10-25	♦SSX	391 - 72
SZ16-47-20-1	♦SSX	391 - 78
SZ16-47-20-25	♦SSX	391 - 79
SZ16-47-5-1	♦SSX	391 - 56
SZ16-47-5-25	♦SSX	391 - 57
SZ16-51-10-1	♦SSX	392 - 2
SZ16-51-10-25	♦SSX	392 - 3
SZ16-51-20-1	♦SSX	392 - 9
SZ16-51-20-25	♦SSX	392 - 10
SZ16-51-5-1	♦SSX	391 -192
SZ16-51-5-25	♦SSX	391 -193
SZ16-56-10-1	♦SSX	392 -128
SZ16-56-10-25	♦SSX	392 -129
SZ16-56-20-1	♦SSX	392 -136
SZ16-56-20-25	♦SSX	392 -137
SZ16-56-5-1	♦SSX	392 -112
SZ16-56-5-25	♦SSX	392 -113
SZ16-62-10-1	♦SSX	393 - 41
SZ16-62-10-25	♦SSX	393 - 42
SZ16-62-20-1	♦SSX	393 - 48
SZ16-62-20-25	♦SSX	393 - 49
SZ16-62-5-1	♦SSX	393 - 27
SZ16-62-5-25	♦SSX	393 - 28
SZ16-68-10-1	♦SSX	393 -135
SZ16-68-10-25	♦SSX	393 -136
SZ16-68-20-1	♦SSX	393 -142
SZ16-68-20-25	♦SSX	393 -143
SZ16-68-5-1	♦SSX	393 -120
SZ16-68-5-25	♦SSX	393 -121
SZ16-75-10-1	♦SSX	394 - 55
SZ16-75-10-25	♦SSX	394 - 56
SZ16-75-20-1	♦SSX	394 - 63
SZ16-75-20-25	♦SSX	394 - 64
SZ16-75-5-1	♦SSX	394 - 40
SZ16-75-5-25	♦SSX	394 - 41
SZ16-82-10-1	♦SSX	394 -162
SZ16-82-10-25	♦SSX	394 -163
SZ16-82-20-1	♦SSX	394 -168
SZ16-82-20-25	♦SSX	394 -169
SZ16-82-5-1	♦SSX	394 -147
SZ16-82-5-25	♦SSX	394 -148
SZ16-91-10-1	♦SSX	395 - 70
SZ16-91-10-25	♦SSX	395 - 71
SZ16-91-20-1	♦SSX	395 - 77
SZ16-91-20-25	♦SSX	395 - 78
SZ16-91-5-1	♦SSX	395 - 56
SZ16-91-5-25	♦SSX	395 - 57
SZ16-100-10-1	♦SSX	395 -179
SZ16-100-10-25	♦SSX	395 -180
SZ16-100-20-1	♦SSX	395 -186
SZ16-100-20-25	♦SSX	395 -187
SZ16-100-5-1	♦SSX	395 -163
SZ16-100-5-25	♦SSX	395 -164
SZ16-110-10-1	♦SSX	396 - 97
SZ16-110-10-25	♦SSX	396 - 98
SZ16-110-20-1	♦SSX	396 -104
SZ16-110-20-25	♦SSX	396 -105
SZ16-110-5-1	♦SSX	396 - 83
SZ16-110-5-25	♦SSX	396 - 84
SZ16-120-10-1	♦SSX	396 -184
SZ16-120-10-25	♦SSX	396 -185
SZ16-120-20-1	♦SSX	396 -191
SZ16-120-20-25	♦SSX	396 -192
SZ16-120-5-1	♦SSX	396 -170
SZ16-120-5-25	♦SSX	396 -171
SZ16-130-10-1	♦SSX	397 - 73
SZ16-130-10-25	♦SSX	397 - 74
SZ16-130-20-1	♦SSX	397 - 80
SZ16-130-20-25	♦SSX	397 - 81
SZ16-130-5-1	♦SSX	397 - 59
SZ16-130-5-25	♦SSX	397 - 60
SZ16-140-10-1	♦SSX	397 -139
SZ16-140-10-25	♦SSX	397 -140
SZ16-140-20-1	♦SSX	397 -144
SZ16-140-20-25	♦SSX	397 -145
SZ16-140-5-1	♦SSX	397 -133

Δ-Registered with JEDEC by this manufacturer

♦-Mfr's data sheet available in microfilm service

1. TYPE No. CROSS INDEX

IN TYPE NUMBER SEQUENCE

TYPE No.	MFRS	Pg&Line
SZ16-140-5-25	♦SSX	397 -134
SZ16-150-10-1	♦SSX	398 - 16
SZ16-150-10-25	♦SSX	398 - 17
SZ16-150-20-1	♦SSX	398 - 23
SZ16-150-20-25	♦SSX	398 - 24
SZ16-150-5-1	♦SSX	398 - 2
SZ16-150-5-25	♦SSX	398 - 3
SZ16-160-10-1	♦SSX	398 - 93
SZ16-160-10-25	♦SSX	398 - 94
SZ16-160-20-1	♦SSX	398 -100
SZ16-160-20-25	♦SSX	398 -101
SZ16-160-5-1	♦SSX	398 - 83
SZ16-160-5-25	♦SSX	398 - 84
SZ16-170-10-1	♦SSX	398 -141
SZ16-170-10-25	♦SSX	398 -142
SZ16-170-20-1	♦SSX	398 -143
SZ16-170-20-25	♦SSX	398 -144
SZ16-170-5-1	♦SSX	398 -139
SZ16-170-5-25	♦SSX	398 -140
SZ16-180-10-1	♦SSX	399 - 19
SZ16-180-10-25	♦SSX	399 - 20
SZ16-180-20-1	♦SSX	399 - 26
SZ16-180-20-25	♦SSX	399 - 27
SZ16-180-5-1	♦SSX	399 - 8
SZ16-180-5-25	♦SSX	399 - 9
SZ16-190-10-1	♦SSX	399 - 65
SZ16-190-20-1	♦SSX	399 - 66
SZ16-190-5-1	♦SSX	399 - 64
SZ16-200-10-1	♦SSX	399 -115
SZ16-200-10-25	♦SSX	399 -116
SZ16-200-20-1	♦SSX	399 -122
SZ16-200-20-25	♦SSX	399 -123
SZ16-200-5-1	♦SSX	399 -105
SZ16-200-5-25	♦SSX	399 -106
SZ16.0	♦SCH	196 -136
SZ17	SIEG	197 - 97
SZ18	SIEG	198 - 29
SZ19	SIEG	199 -112
SZ20	SIEG	200 - 35
SZ40-1.8-10-25	♦SSX	377 - 8
SZ40-1.8-20-25	♦SSX	377 - 9
SZ40-1.8-5-25	♦SSX	377 - 7
SZ40-2.0-10-25	♦SSX	377 - 14
SZ40-2.0-20-25	♦SSX	377 - 15
SZ40-2.0-5-25	♦SSX	377 - 13
SZ40-2.2-10-25	♦SSX	377 - 21
SZ40-2.2-20-25	♦SSX	377 - 22
SZ40-2.2-5-25	♦SSX	377 - 20
SZ40-2.4-10-25	♦SSX	377 - 26
SZ40-2.4-20-25	♦SSX	377 - 27
SZ40-2.4-5-25	♦SSX	377 - 25
SZ40-2.7-10-25	♦SSX	377 - 32
SZ40-2.7-20-25	♦SSX	377 - 33
SZ40-2.7-5-25	♦SSX	377 - 31
SZ40-3.0-10-25	♦SSX	377 - 43
SZ40-3.0-20-25	♦SSX	377 - 44
SZ40-3.3-10-25	♦SSX	377 - 64
SZ40-3.3-20-25	♦SSX	377 - 65
SZ40-3.3-5-25	♦SSX	377 - 61
SZ40-3.6-10-25	♦SSX	377 - 86
SZ40-3.6-20-25	♦SSX	377 - 87
SZ40-3.6-5-25	♦SSX	377 - 83
SZ40-3.9-10-25	♦SSX	377 -115
SZ40-3.9-20-25	♦SSX	377 -116
SZ40-3.9-5-25	♦SSX	377 -111
SZ40-4.3-10-25	♦SSX	377 -153
SZ40-4.3-20-25	♦SSX	377 -154
SZ40-4.3-5-25	♦SSX	377 -149
SZ40-4.7-10-25	♦SSX	378 - 36
SZ40-4.7-20-25	♦SSX	378 - 37
SZ40-4.7-5-25	♦SSX	378 - 32
SZ40-5.1-10-25	♦SSX	378 - 79
SZ40-5.1-20-25	♦SSX	378 - 80
SZ40-5.1-5-25	♦SSX	378 - 75
SZ40-5.6-10-25	♦SSX	378 -126
SZ40-5.6-20-25	♦SSX	378 -127
SZ40-5.6-5-25	♦SSX	378 -122
SZ40-6.2-10-25	♦SSX	378 -179
SZ40-6.2-20-25	♦SSX	378 -180
SZ40-6.2-5-25	♦SSX	378 -175
SZ40-6.8-10-25	♦SSX	379 - 79
SZ40-6.8-20-25	♦SSX	379 - 80
SZ40-6.8-5-25	♦SSX	379 - 75
SZ40-7.1-10-25	♦SSX	379 -110
SZ40-7.1-20-25	♦SSX	379 -111
SZ40-7.1-5-25	♦SSX	379 -109
SZ40-7.7-10-25	♦SSX	380 - 29
SZ40-7.7-20-25	♦SSX	380 - 30
SZ40-7.7-5-25	♦SSX	380 - 28
SZ40-8.2-10-25	♦SSX	380 -119
SZ40-8.2-20-25	♦SSX	380 -120
SZ40-8.2-5-25	♦SSX	380 -115
SZ40-9.1-10-25	♦SSX	381 - 41
SZ40-9.1-20-25	♦SSX	381 - 42
SZ40-9.1-5-25	♦SSX	381 - 37
SZ40-10-10-25	♦SSX	381 -150
SZ40-10-20-25	♦SSX	381 -151
SZ40-11-10-25	♦SSX	382 - 38
SZ40-11-20-25	♦SSX	382 - 39
SZ40-11-5-25	♦SSX	382 - 34
SZ40-12-10-25	♦SSX	382 -161
SZ40-12-20-25	♦SSX	382 -162
SZ40-12-5-25	♦SSX	382 -157
SZ40-13-10-25	♦SSX	383 - 68
SZ40-13-20-25	♦SSX	383 - 69
SZ40-13-5-25	♦SSX	383 - 64
SZ40-14-10-25	♦SSX	383 -138
SZ40-14-20-25	♦SSX	383 -139
SZ40-14-5-25	♦SSX	383 -137
SZ40-15-10-25	♦SSX	384 - 47
SZ40-15-20-25	♦SSX	384 - 48
SZ40-15-5-25	♦SSX	384 - 43
SZ40-16-10-25	♦SSX	384 -143
SZ40-16-20-25	♦SSX	384 -144
SZ40-16-5-25	♦SSX	384 -139
SZ40-17-10-25	♦SSX	385 - 2
SZ40-17-20-25	♦SSX	385 - 3
SZ40-17-5-25	♦SSX	385 - 1
SZ40-18-10-25	♦SSX	385 -109
SZ40-18-20-25	♦SSX	385 -110
SZ40-18-5-25	♦SSX	385 -105
SZ40-20-10-25	♦SSX	386 - 56
SZ40-20-20-25	♦SSX	386 - 57
SZ40-20-5-25	♦SSX	386 - 52
SZ40-22-10-25	♦SSX	386 -163
SZ40-22-20-25	♦SSX	386 -164
SZ40-22-5-25	♦SSX	386 -159
SZ40-24-10-25	♦SSX	387 - 76
SZ40-24-20-25	♦SSX	387 - 77
SZ40-24-5-25	♦SSX	387 - 73
SZ40-27-10-25	♦SSX	388 - 18
SZ40-27-20-25	♦SSX	388 - 19
SZ40-27-5-25	♦SSX	388 - 15
SZ40-30-10-25	♦SSX	388 -134
SZ40-30-20-25	♦SSX	388 -135
SZ40-30-5-25	♦SSX	388 -131
SZ40-33-10-25	♦SSX	389 - 43
SZ40-33-20-25	♦SSX	389 - 44
SZ40-33-5-25	♦SSX	389 - 40
SZ40-36-10-25	♦SSX	389 -152
SZ40-36-20-25	♦SSX	389 -153
SZ40-36-5-25	♦SSX	389 -149
SZ40-39-10-25	♦SSX	390 - 43
SZ40-39-20-25	♦SSX	390 - 44
SZ40-39-5-25	♦SSX	390 - 40
SZ40-43-20-25	♦SSX	390 -150
SZ40-43-5-25	♦SSX	390 -147
SZ40-47-10-25	♦SSX	391 - 85
SZ40-47-20-25	♦SSX	391 - 86
SZ40-47-5-25	♦SSX	391 - 82
SZ40-51-10-25	♦SSX	392 - 15
SZ40-51-20-25	♦SSX	392 - 16
SZ40-51-5-25	♦SSX	392 - 13
SZ40-56-10-25	♦SSX	392 -143
SZ40-56-20-25	♦SSX	392 -144
SZ40-56-5-25	♦SSX	392 -140
SZ40-62-10-25	♦SSX	393 - 55
SZ40-62-20-25	♦SSX	393 - 56
SZ40-62-5-25	♦SSX	393 - 52
SZ40-68-10-25	♦SSX	393 -149
SZ40-68-20-25	♦SSX	393 -150
SZ40-68-5-25	♦SSX	393 -146
SZ40-75-10-25	♦SSX	394 - 71
SZ40-75-20-25	♦SSX	394 - 72
SZ40-75-5-25	♦SSX	394 - 68
SZ40-82-10-25	♦SSX	394 -174
SZ40-82-20-25	♦SSX	394 -175
SZ40-82-5-25	♦SSX	394 -171
SZ40-91-10-25	♦SSX	395 - 83
SZ40-91-20-25	♦SSX	395 - 84
SZ40-91-5-25	♦SSX	395 - 80
SZ40-100-10-25	♦SSX	395 -193
SZ40-100-20-25	♦SSX	395 -194
SZ40-100-5-25	♦SSX	395 -190
SZ40-110-10-25	♦SSX	396 -110
SZ40-110-20-25	♦SSX	396 -111
SZ40-110-5-25	♦SSX	396 -107
SZ40-120-10-25	♦SSX	396 -197
SZ40-120-20-25	♦SSX	397 - 1
SZ40-120-5-25	♦SSX	396 -194
SZ40-130-10-25	♦SSX	397 - 86
SZ40-130-20-25	♦SSX	397 - 87
SZ40-130-5-25	♦SSX	397 - 83
SZ40-140-10-25	♦SSX	397 -147
SZ40-140-20-25	♦SSX	397 -148
SZ40-140-5-25	♦SSX	397 -146
SZ40-150-10-25	♦SSX	398 - 29
SZ40-150-20-25	♦SSX	398 - 30
SZ40-150-5-25	♦SSX	398 - 26
SZ40-160-10-25	♦SSX	398 -106
SZ40-160-20-25	♦SSX	398 -107
SZ40-160-5-25	♦SSX	398 -103
SZ40-170-10-25	♦SSX	398 -146
SZ40-170-20-25	♦SSX	398 -147
SZ40-170-5-25	♦SSX	398 -145
SZ40-180-10-25	♦SSX	399 - 32
SZ40-180-20-25	♦SSX	399 - 33
SZ40-180-5-25	♦SSX	399 - 29
SZ40-200-10-25	♦SSX	399 -127
SZ40-200-20-25	♦SSX	399 -128
SZ40-200-5-25	♦SSX	399 -125
SZ102/0V8	♦PIHS	163 - 45
SZ102/1V5	♦PIHS	163 - 95
SZ102/2V2	♦PIHS	163 -170
SZ102/3V0	♦PIHS	165 - 56
SZ102/3V7	♦PIHS	167 - 88
SZL6	SIEG	174 - 23
SZL7	SIEG	179 - 25
SZL8	SIEG	181 - 85
SZL9	SIEG	184 - 96
SZL10	SIEG	188 - 27
SZL11	SIEG	189 -141
SZL12	SIEG	191 -114
SZP5-9.1-10-1	♦SSX	185 - 66
SZP5-9.1-20-1	♦SSX	185 - 72
SZP5-9.1-5-1	♦SSX	185 - 47
SZP5-10-10-1	♦SSX	187 -113
SZP5-10-20-1	♦SSX	187 -119
SZP5-10-5-1	♦SSX	187 - 93
SZP5-11-10-1	♦SSX	189 - 50
SZP5-11-20-1	♦SSX	189 - 56
SZP5-11-5-1	♦SSX	189 - 34
SZP5-12-10-1	♦SSX	191 - 9
SZP5-12-20-1	♦SSX	191 - 15
SZP5-12-5-1	♦SSX	190 -206
SZP5-13-10-1	♦SSX	192 -184
SZP5-13-20-1	♦SSX	192 -190
SZP5-13-5-1	♦SSX	192 -171
SZP5-14-10-1	♦SSX	193 -196
SZP5-14-20-1	♦SSX	194 - 1
SZP5-14-5-1	♦SSX	193 -189
SZP5-15-10-1	♦SSX	195 - 12
SZP5-15-20-1	♦SSX	195 - 19
SZP5-15-5-1	♦SSX	194 -191
SZP5-16-10-1	♦SSX	196 -115
SZP5-16-20-1	♦SSX	196 -121
SZP5-16-5-1	♦SSX	196 -101
SZP5-17-10-1	♦SSX	197 -120
SZP5-17-20-1	♦SSX	197 -125
SZP5-17-5-1	♦SSX	197 -113
SZP5-18-10-1	♦SSX	198 -124
SZP5-18-20-1	♦SSX	198 -130
SZP5-18-5-1	♦SSX	198 -105
SZP5-20-10-1	♦SSX	200 -121
SZP5-20-20-1	♦SSX	200 -127
SZP5-20-5-1	♦SSX	200 -104
SZP5-22-10-1	♦SSX	202 - 16
SZP5-22-20-1	♦SSX	202 - 22
SZP5-22-5-1	♦SSX	201 -209
SZP5-24-10-1	♦SSX	203 -120
SZP5-24-20-1	♦SSX	203 -126
SZP5-24-5-1	♦SSX	203 -106
SZP5-27-10-1	♦SSX	205 - 54
SZP5-27-20-1	♦SSX	205 - 60
SZP5-27-5-1	♦SSX	205 - 38
SZP5-30-10-1	♦SSX	206 -190
SZP5-30-20-1	♦SSX	206 -197
SZP5-30-5-1	♦SSX	206 -174
SZP5-33-10-1	♦SSX	208 - 78
SZP5-33-20-1	♦SSX	208 - 84
SZP5-33-5-1	♦SSX	208 - 62
SZP5-36-10-1	♦SSX	209 -150
SZP5-36-20-1	♦SSX	209 -155
SZP5-36-5-1	♦SSX	209 -138
SZP5-39-10-1	♦SSX	210 -187
SZP5-39-20-1	♦SSX	210 -192
SZP5-39-5-1	♦SSX	210 -174
SZP5-43-10-1	♦SSX	211 -203
SZP5-43-20-1	♦SSX	212 - 5
SZP5-43-5-1	♦SSX	211 -191
SZP5-47-10-1	♦SSX	213 - 14
SZP5-47-20-1	♦SSX	213 - 19
SZP5-47-5-1	♦SSX	212 -202
SZP5-51-10-1	♦SSX	214 - 17
SZP5-51-20-1	♦SSX	214 - 22
SZP5-51-5-1	♦SSX	214 - 7
SZP5-56-10-1	♦SSX	215 - 2
SZP5-56-20-1	♦SSX	215 - 7
SZP5-56-5-1	♦SSX	214 -192
SZP5-62-10-1	♦SSX	216 - 9
SZP5-62-20-1	♦SSX	216 - 14
SZP5-62-5-1	♦SSX	215 -202
SZP5-68-10-1	♦SSX	216 -184
SZP5-68-20-1	♦SSX	216 -189
SZP5-68-5-1	♦SSX	216 -174
SZP5-75-10-1	♦SSX	217 -171
SZP5-75-20-1	♦SSX	217 -176
SZP5-75-5-1	♦SSX	217 -162
SZP5-82-10-1	♦SSX	218 -151
SZP5-82-20-1	♦SSX	218 -157
SZP5-82-5-1	♦SSX	218 -144
SZP5-91-10-1	♦SSX	219 -135
SZP5-91-20-1	♦SSX	219 -140
SZP5-100-10-1	♦SSX	220 - 92
SZP5-100-20-1	♦SSX	220 - 96
SZP5-100-5-1	♦SSX	220 - 86
SZP5-110-10-1	♦SSX	221 - 59
SZP5-110-20-1	♦SSX	221 - 62
SZP5-110-5-1	♦SSX	221 - 54
SZP5-120-10-1	♦SSX	222 - 9
SZP5-120-20-1	♦SSX	222 - 13
SZP5-120-5-1	♦SSX	222 - 3
SZP5-130-10-1	♦SSX	222 -153
SZP5-130-20-1	♦SSX	222 -157
SZP5-130-5-1	♦SSX	222 -148
SZP5-140-10-1	♦SSX	223 - 90
SZP5-140-20-1	♦SSX	223 - 93
SZP5-140-5-1	♦SSX	223 - 86
SZP5-150-10-1	♦SSX	223 -180
SZP5-150-20-1	♦SSX	224 - 1
SZP5-150-5-1	♦SSX	223 -173
SZP5-160-10-1	♦SSX	224 -131
SZP5-160-20-1	♦SSX	224 -135
SZP5-160-5-1	♦SSX	224 -126
SZP5-170-10-1	♦SSX	225 - 58
SZP5-170-20-1	♦SSX	225 - 61
SZP5-170-5-1	♦SSX	225 - 54
SZP5-180-10-1	♦SSX	225 -136
SZP5-180-20-1	♦SSX	225 -140
SZP5-180-5-1	♦SSX	225 -130
SZP5-190-10-1	♦SSX	226 - 78
SZP5-190-20-1	♦SSX	226 - 80
SZP5-190-5-1	♦SSX	226 - 75
SZP5-200-10-1	♦SSX	226 -140
SZP5-200-20-1	♦SSX	226 -144
SZP5-200-5-1	♦SSX	226 -135
SZ.5-1.8-10-25		163 -110
SZ.5-1.8-20-25		163 -111
SZ.5-1.8-5-25		163 -108
SZ.5-2.0-10-25		163 -141
SZ.5-2.0-20-25		163 -142
SZ.5-2.0-5-25		163 -139
SZ.5-2.2-10-25		163 -188
SZ.5-2.2-20-25		163 -189
SZ.5-2.2-5-25		163 -185
SZ.5-2.4-10-25		164 - 63
SZ.5-2.4-20-25		164 - 67
SZ.5-2.4-5-25		164 - 55
SZ.5-2.7-10-25		164 -184
SZ.5-2.7-20-25		164 -188
SZ.5-2.7-5-25		164 -171
SZ.5-3.0-10-25		165 -123
SZ.5-3.0-20-25		165 -127
SZ.5-3.0-5-25		165 -111
SZ.5-3.3-10-25		166 - 57
SZ.5-3.3-20-25		166 - 62
SZ.5-3.3-5-25		166 - 42
SZ.5-3.6-10-25		167 - 21
SZ.5-3.6-20-25		167 - 26
SZ.5-3.9-10-25		167 -198
SZ.5-3.9-20-25		167 -203
SZ.5-4.3-10-25		169 - 12

Δ-Registered with JEDEC by this manufacturer

♦-Mfr's data sheet available in microfilm service

1. TYPE No. CROSS INDEX

IN TYPE NUMBER SEQUENCE

TYPE No.	MFRS	Pg&Line
SZ.5-4.3-20-25	♦SSX	169 - 17
SZ.5-4.7-10-25	♦SSX	170 - 59
SZ.5-4.7-20-25	♦SSX	170 - 64
SZ.5-5.1-10-25	♦SSX	171 -139
SZ.5-5.1-20-25	♦SSX	171 -144
SZ.5-5.6-10-25	♦SSX	173 - 19
SZ.5-5.6-20-25	♦SSX	173 - 24
SZ.5-5.6-5-25	♦SSX	173 - 1
SZ.5-6.2-10-25	♦SSX	175 - 83
SZ.5-6.2-20-25	♦SSX	175 - 88
SZ.5-6.2-5-25	♦SSX	175 - 66
SZ.5-6.8-10-25	♦SSX	178 - 54
SZ.5-6.8-20-25	♦SSX	178 - 59
SZ.5-6.8-5-25	♦SSX	178 - 35
SZ.5-7.1-10-25	♦SSX	179 - 61
SZ.5-7.1-20-25	♦SSX	179 - 64
SZ.5-7.1-5-25	♦SSX	179 - 59
SZ.5-7.7-10-25	♦SSX	181 - 29
SZ.5-7.7-20-25	♦SSX	181 - 30
SZ.5-7.7-5-25	♦SSX	181 - 27
SZ.5-8.2-10-25	♦SSX	182 - 32
SZ.5-8.2-20-25	♦SSX	182 - 37
SZ.5-8.2-5-25	♦SSX	182 - 12
SZ.5-9.1-10-25	♦SSX	185 - 67
SZ.5-9.1-20-25	♦SSX	185 - 73
SZ.5-9.1-5-25	♦SSX	185 - 48
SZ.5-10-10-25	♦SSX	187 -114
SZ.5-10-20-25	♦SSX	187 -120
SZ.5-10-5-25	♦SSX	187 - 94
SZ.5-11-10-25	♦SSX	189 - 51
SZ.5-11-20-25	♦SSX	189 - 57
SZ.5-11-5-25	♦SSX	189 - 35
SZ.5-12-10-25	♦SSX	191 - 10
SZ.5-12-20-25	♦SSX	191 - 16
SZ.5-12-5-25	♦SSX	190 -207
SZ.5-13-10-25	♦SSX	192 -185
SZ.5-13-20-25	♦SSX	192 -191
SZ.5-13-5-25	♦SSX	192 -172
SZ.5-14-10-25	♦SSX	193 -197
SZ.5-14-20-25	♦SSX	194 - 2
SZ.5-14-5-25	♦SSX	193 -190
SZ.5-15-10-25	♦SSX	195 - 13
SZ.5-15-20-25	♦SSX	195 - 20
SZ.5-15-5-25	♦SSX	194 -192
SZ.5-16-10-25	♦SSX	196 -116
SZ.5-16-20-25	♦SSX	196 -122
SZ.5-16-5-25	♦SSX	196 -102
SZ.5-17-10-25	♦SSX	197 -121
SZ.5-17-20-25	♦SSX	197 -126
SZ.5-17-5-25	♦SSX	197 -114
SZ.5-18-10-25	♦SSX	198 -125
SZ.5-18-20-25	♦SSX	198 -131
SZ.5-18-5-25	♦SSX	198 -106
SZ.5-20-10-25	♦SSX	200 -122
SZ.5-20-20-25	♦SSX	200 -128
SZ.5-20-5-25	♦SSX	200 -105
SZ.5-22-10-25	♦SSX	202 - 17
SZ.5-22-20-25	♦SSX	202 - 23
SZ.5-22-5-25	♦SSX	202 - 1
SZ.5-24-10-25	♦SSX	203 -121
SZ.5-24-20-25	♦SSX	203 -127
SZ.5-24-5-25	♦SSX	203 -107
SZ.5-27-10-25	♦SSX	205 - 55
SZ.5-27-20-25	♦SSX	205 - 61
SZ.5-27-5-25	♦SSX	205 - 39
SZ.5-30-10-25	♦SSX	206 -191
SZ.5-30-20-25	♦SSX	206 -198
SZ.5-30-5-25	♦SSX	206 -175
SZ.5-33-10-25	♦SSX	208 - 79
SZ.5-33-20-25	♦SSX	208 - 85
SZ.5-33-5-25	♦SSX	208 - 63
SZ.5-36-10-25	♦SSX	209 -151
SZ.5-36-20-25	♦SSX	209 -156
SZ.5-36-5-25	♦SSX	209 -139
SZ.5-39-10-25	♦SSX	210 -188
SZ.5-39-20-25	♦SSX	210 -193
SZ.5-39-5-25	♦SSX	210 -175
SZ.5-43-10-25	♦SSX	212 - 1
SZ.5-43-20-25	♦SSX	212 - 6
SZ.5-43-5-25	♦SSX	211 -192
SZ.5-47-10-25	♦SSX	213 - 15
SZ.5-47-20-25	♦SSX	213 - 20
SZ.5-47-5-25	♦SSX	213 - 1
SZ.5-51-10-25	♦SSX	214 - 18
SZ.5-51-20-25	♦SSX	214 - 23
SZ.5-51-5-25	♦SSX	214 - 8
SZ.5-56-10-25	♦SSX	215 - 3
SZ.5-56-20-25	♦SSX	215 - 8
SZ.5-56-5-25	♦SSX	214 -193
SZ.5-62-10-25	♦SSX	216 - 10
SZ.5-62-20-25	♦SSX	216 - 15
SZ.5-62-5-25	♦SSX	216 - 1
SZ.5-68-10-25	♦SSX	216 -185
SZ.5-68-20-25	♦SSX	216 -190
SZ.5-68-5-25	♦SSX	216 -175
SZ.5-75-10-25	♦SSX	217 -172
SZ.5-75-20-25	♦SSX	217 -177
SZ.5-75-5-25	♦SSX	217 -163
SZ.5-82-10-25	♦SSX	218 -152
SZ.5-82-20-25	♦SSX	218 -158
SZ.5-82-5-25	♦SSX	218 -145
SZ.5-91-10-25	♦SSX	219 -136
SZ.5-91-20-25	♦SSX	219 -141
SZ.5-91-5-25	♦SSX	219 -130
SZ.5-100-10-25	♦SSX	220 - 93
SZ.5-100-20-25	♦SSX	220 - 97
SZ.5-100-5-25	♦SSX	220 - 87
SZ.5-110-20-25	♦SSX	221 - 63
SZ.5-110-5-25	♦SSX	221 - 55
SZ.5-120-10-25	♦SSX	222 - 10
SZ.5-120-20-25	♦SSX	222 - 14
SZ.5-120-5-25	♦SSX	222 - 4
SZ.5-130-10-25	♦SSX	222 -154
SZ.5-130-20-25	♦SSX	222 -158
SZ.5-130-5-25	♦SSX	222 -149
SZ.5-140-10-25	♦SSX	223 - 91
SZ.5-140-20-25	♦SSX	223 - 94
SZ.5-140-5-25	♦SSX	223 - 87
SZ.5-150-10-25	♦SSX	223 -181
SZ.5-150-20-25	♦SSX	224 - 2
SZ.5-150-5-25	♦SSX	223 -174
SZ.5-160-10-25	♦SSX	224 -132
SZ.5-160-20-25	♦SSX	224 -136
SZ.5-160-5-25	♦SSX	224 -127
SZ.5-170-10-25	♦SSX	225 - 59
SZ.5-170-20-25	♦SSX	225 - 62
SZ.5-170-5-25	♦SSX	225 - 55
SZ.5-180-10-25	♦SSX	225 -137
SZ.5-180-20-25	♦SSX	225 -141
SZ.5-180-5-25	♦SSX	225 -131
SZ.5-200-10-25	♦SSX	226 -141
SZ.5-200-20-25	♦SSX	226 -145
SZ.5-200-5-25	♦SSX	226 -136
S.75-050	♦SSX	277 -216
S.75-100	♦SSX	278 - 29
S.75-200	♦SSX	278 - 70
S.75-400	♦SSX	278 -151
S.75-600	♦SSX	279 - 3
S.75-800	♦SSX	279 - 48
S.75-1000	♦SSX	279 - 57
S.75-1200	♦SSX	279 - 58
T7KV	♦SOD	425 - 84
T10KV	SOD	427 - 91
T12A6F	♦SCN	295 -116
T20A6F	♦SCN	297 -195
T30A6F	♦SCN	300 -140
T51A	♦HITJ	263 - 9
T51B	♦HITJ	263 - 12
T51C	♦HITJ	263 - 15
T52A	♦HITJ	263 - 10
T52B	♦HITJ	263 - 13
T52C	♦HITJ	263 - 16
T53A	♦HITJ	291 -135
T53B	♦HITJ	291 -180
T53T	♦HITJ	291 -138
T54A	♦HITJ	291 -136
T54B	♦HITJ	291 -181
T54T	♦HITJ	291 -139
T481A	GTN	302 -160
T481B	GTN	302 -196
T481C	GTN	303 - 5
T481D	GTN	303 - 18
T481E	GTN	403 -204
T481F	GTN	407 - 47
T482A	GTN	305 -218
T482B	GTN	306 - 45
T482C	GTN	306 -102
T482D	GTN	306 -146
T482E	GTN	404 - 59
T482F	GTN	407 -141
T483A	GTN	301 - 2
T483B	♦GTN	302 -197
T483C	GTN	301 - 30
T483D	GTN	303 - 19
T483E	GTN	403 -168
T483F	GTN	407 - 18
T484A	GTN	302 -161
T484B	GTN	302 -198
T484C	GTN	303 - 6
T484D	GTN	303 - 20
T484E	GTN	403 -205
T484F	GTN	407 - 48
T485A	GTN	302 -162
T485B	GTN	302 -199
T485C	GTN	303 - 7
T485D	GTN	303 - 21
T485E	GTN	403 -206
T485F	GTN	407 - 49
T3889	♦SCN	294 -175
T3890	♦SCN	294 -203
T3891	♦SCN	295 - 16
T3892	♦SCN	295 - 45
T3893	♦SCN	295 - 67
T3899	♦SCN	297 - 96
T3900	♦SCN	297 -109
T3901	♦SCN	297 -135
T3902	♦SCN	297 -151
T3903	♦SCN	297 -161
T3909	♦SCN	300 - 13
T3910	♦SCN	300 - 41
T3911	♦SCN	300 - 74
T3912	♦SCN	300 - 99
T3913	♦SCN	300 -113
T-FM50(A)	♦THEF	243 -102
T-FM75(A)	♦THEF	243 -104
T-FM100(A)	♦THEF	243 -105
T-FM150(A)	♦THEF	243 -106
T-FM200(A)	♦THEF	243 -107
T-FM250(A)	♦THEF	243 -108
T-GMP5	♦THEF	328 - 70
T-GMP5A	♦THEF	328 - 71
T-GMP5B	♦THEF	328 - 72
T-LVA47A	♦THEF	170 - 10
T-LVA51A	♦THEF	171 - 93
T-LVA56A	♦THEF	172 -181
T-LVA62A	♦THEF	174 -210
T-LVA68A	♦THEF	178 - 2
T-LVA75A	♦THEF	180 - 1
T-LVA82A	♦THEF	181 -184
T-LVA91A	♦THEF	185 - 16
T-LVA100A	♦THEF	187 - 60
T-LVA347A	♦THEF	170 - 11
T-LVA351A	♦THEF	171 - 94
T-LVA356A	♦THEF	172 -182
T-LVA362A	♦THEF	174 -211
T-LVA368A	♦THEF	178 - 3
T-LVA375A	♦THEF	180 - 2
T-LVA382A	♦THEF	181 -185
T-LVA391A	♦THEF	185 - 17
T-LVA450A	♦THEF	171 - 2
T-LVA453A	♦THEF	172 - 48
T-LVA456A	♦THEF	172 -156
T-LVA459A	♦THEF	173 -179
T-LVA462A	♦THEF	174 -168
T-LVA465A	♦THEF	177 - 5
T-LVA468A	♦THEF	177 -193
T-LVA471A	♦THEF	179 - 55
T-LVA474A	♦THEF	179 -108
T-LVA477A	♦THEF	181 - 22
T-LVA480A	♦THEF	181 - 75
T-LVA483A	♦THEF	182 -205
T-LVA486A	♦THEF	183 -121
T-LVA489A	♦THEF	184 - 4
T-LVA492A	♦THEF	186 - 33
T-LVA495A	♦THEF	186 -105
T-LVA498A	♦THEF	186 -147
T-LVA3100A	♦THEF	187 - 61
TA3	SOD	283 - 68
TA5	SOD	283 -112
TA10	SOD	283 -167
TA20	SOD	284 - 15
TA30	SOD	284 - 58
TA40	SOD	284 -122
TA50	SOD	284 -165
TA60	SOD	285 - 6
TA80	SOD	285 - 79
TA100	SOD	402 - 81
TA120	SOD	406 - 95
TAV	SOD	283 - 67
TD-13	SAKJ	408 -183
TD-15	SAKJ	411 - 82
TD-15H	SAKJ	411 - 88
TFR1N	TOSJ	248 -144
TFR1Q	IMTM	248 -146
	TOSJ	
TFR1T	IMTM	248 -155
	TOSJ	
TG4	♦VARO	281 - 56
TG6	♦VARO	281 -173
TG8	♦VARO	282 - 45
TG10	♦VARO	401 -171
TG24	♦VARO	286 -104
TG26	♦VARO	286 -153
TG28	♦VARO	286 -195
TG80	♦VARO	403 - 37
TG84	♦VARO	293 -106
TG86	♦VARO	293 -117
TG88	♦VARO	293 -125
TG210	♦VARO	402 -104
TG280	♦VARO	403 - 95
TG284	♦VARO	297 - 7
TG286	♦VARO	297 - 21
TG288	♦VARO	297 - 36
TH6952	SPR	436 - 43
THD3600	SPR	237 - 31
THD6916	♦SPR	436 - 44
THD6919	♦SPR	436 - 45
THD6924	♦SPR	436 - 46
THZ016B10	SPR	384 - 87
THZ821	SPR	174 - 46
THZ823	SPR	174 - 47
THZ825	SPR	174 - 48
THZ827	SPR	174 - 49
THZ829	SPR	174 - 50
THZ4565	SPR	176 - 63
THZ4566	SPR	176 - 64
THZ4567	SPR	176 - 65
THZ4568	SPR	176 - 66
THZ4569	SPR	176 - 67
THZ4570	SPR	176 - 68
THZ4571	SPR	176 - 69
THZ4572	SPR	176 - 70
THZ4573	SPR	176 - 71
THZ4574	SPR	176 - 72
THZ4575	SPR	176 - 73
THZ4576	SPR	176 - 74
THZ4577	SPR	176 - 75
THZ4578	SPR	176 - 76
THZ4579	SPR	176 - 77
TI51	♦UNI	232 - 30
TI52	♦UNI	232 - 31
TI53	♦UNI	232 - 32
TI58	♦UNI	232 - 54
TI59	♦UNI	232 - 55
TI60	♦UNI	232 - 56
TI71	♦UNI	245 -109
TI72	♦UNI	245 -112
TI73	♦UNI	245 -113
TI74	♦UNI	245 -114
TI75	♦UNI	245 -117
TID31	♦UNI	251 -106
TID32	♦UNI	251 -112
TID33	♦UNI	251 -108
TID34	♦UNI	251 -113
TID35	♦UNI	251 -109
TID36	♦UNI	251 -114
TID37	♦UNI	251 -107
TID38	♦UNI	246 -141
TID39	♦UNI	246 -164
TID40	♦UNI	247 -144
TID41	♦UNI	247 -118
TID42	♦UNI	247 -106
TID43	♦UNI	247 -107
TID44	♦UNI	247 - 69
TID778	♦UNI	244 -201
TJ118-0	♦SOD	367 -100
TJ118-1	♦SOD	367 -128
TJ118-2	♦SOD	367 -163
TJ118-3	♦SOD	367 -199
TJ118-4	♦SOD	367 -205
TJ118-5	♦SOD	368 - 19
TJ118-6	♦SOD	368 - 25
TJ118-8	♦SOD	368 - 59
TJ132-0A	SOD	298 -113
TJ132-0C	SOD	298 -114
TJ132-0D	SOD	298 -115
TJ132-1A	SOD	298 -142
TJ132-1C	SOD	298 -143
TJ132-1D	SOD	298 -144
TJ132-2A	SOD	298 -186
TJ132-2C	SOD	298 -187
TJ132-2D	SOD	298 -188
TJ132-3A	SOD	299 - 14
TJ132-3C	SOD	299 - 15
TJ132-3D	SOD	299 - 16
TJ132-4A	SOD	299 - 42
TJ132-4C	SOD	299 - 43
TJ132-4D	SOD	299 - 44
TJ132-5A	SOD	299 - 88
TJ132-5C	SOD	299 - 89
TJ132-5D	SOD	299 - 90
TJ132-6A	SOD	299 -106
TJ132-6C	SOD	299 -107
TJ132-6D	SOD	299 -108
TJ132-7A	SOD	299 -144
TJ132-7C	SOD	299 -145
TJ132-7D	SOD	299 -146
TJ132-8A	SOD	299 -158
TJ132-8C	SOD	299 -159
TJ132-8D	SOD	299 -160
TJ132-9A	SOD	299 -179
TJ132-9C	SOD	299 -180
TJ132-9D	SOD	299 -181
TJ132-10A	SOD	403 -134
TJ132-10C	SOD	403 -135
TJ132-10D	SOD	403 -136
TMPD914	SPR	231 -101
TMPD2835	SPR	231 -102
TMPD2836	SPR	231 -103
TMPD2837	SPR	231 -104
TMPD2838	SPR	231 -105
TMPD6050	SPR	232 - 12
TMPD6100	SPR	232 - 13
TMPZ5230	♦SPR	169 -150
TMPZ5231	♦SPR	171 - 30
TMPZ5232	♦SPR	172 - 96
TMPZ5233	♦SPR	173 -197
TMPZ5234	♦SPR	174 - 78
TMPZ5235	♦SPR	177 -135
TMPZ5236	♦SPR	179 -134
TMPZ5237	♦SPR	181 -106
TMPZ5238	♦SPR	183 -127
TMPZ5239	♦SPR	184 -128
TMPZ5240	♦SPR	186 -185
TMPZ5241	♦SPR	188 -155
TMPZ5242	♦SPR	190 - 99
TMPZ5243	♦SPR	192 - 94
TMPZ5244	♦SPR	193 -163
TMPZ5245	♦SPR	194 -108
TMPZ5246	♦SPR	196 - 24
TMPZ5247	♦SPR	197 - 95
TMPZ5248	♦SPR	198 - 16
TMPZ5249	♦SPR	199 -109
TMPZ5250	♦SPR	200 - 29
TMPZ5251	♦SPR	201 -121
TMPZ5252	♦SPR	203 - 41
TMPZ5253	♦SPR	204 - 92
TMPZ5254	♦SPR	204 -173
TMPZ5255	♦SPR	206 - 25
TMPZ5256	♦SPR	206 -112
TMPZ5257	♦SPR	207 -193
TND903	SPR	315 - 7
TND905	SPR	315 - 8
TND908	SPR	315 - 9
TND918	SPR	315 - 10
TND921	SPR	315 - 11
TND933	SPR	315 - 3
TND938	SPR	315 - 4
TND939	SPR	315 - 5
TND940	SPR	315 - 6
TND942	SPR	315 - 12
TPA62A12	♦THEF	328 - 73
TPA62A18	♦THEF	328 - 74
TPA62B12	♦THEF	328 - 75
TPA62B18	♦THEF	328 - 76
TPA68A12	♦THEF	328 - 77
TPA68A18	♦THEF	328 - 78
TPA68B12	♦THEF	328 - 79
TPA68B18	♦THEF	328 - 80
TPA75A12	♦THEF	328 - 81
TPA75A18	♦THEF	328 - 82
TPA75B12	♦THEF	328 - 83
TPA75B18	♦THEF	328 - 84
TPA82A12	♦THEF	328 - 85
TPA82A18	♦THEF	328 - 86
TPA82B12	♦THEF	328 - 87
TPA82B18	♦THEF	328 - 88
TPA91A12	♦THEF	328 - 89
TPA91A18	♦THEF	328 - 90
TPA91B12	♦THEF	328 - 91
TPA91B18	♦THEF	328 - 92
TPA100A12	♦THEF	328 - 93
TPA100A18	♦THEF	328 - 94
TPA100B12	♦THEF	328 - 95
TPA100B18	♦THEF	328 - 96
TPA110A12	♦THEF	328 - 97
TPA110A18	♦THEF	328 - 98
TPA110B12	♦THEF	328 - 99
TPA110B18	♦THEF	328 -100
TPA120A12	♦THEF	328 -101
TPA120A18	♦THEF	328 -102
TPA120B12	♦THEF	328 -103
TPA120B18	♦THEF	328 -104
TPA130A12	♦THEF	328 -105
TPA130A18	♦THEF	328 -106
TPA130B12	♦THEF	328 -107
TPA130B18	♦THEF	328 -108
TPA150A12	♦THEF	328 -109
TPA150A18	♦THEF	328 -110
TPA150B12	♦THEF	329 - 1
TPA150B18	♦THEF	329 - 2
TPA160A18	♦THEF	329 - 3
TPA160B12	♦THEF	329 - 4

Δ-Registered with JEDEC by this manufacturer

♦-Mfr's data sheet available in microfilm service

1. TYPE No. CROSS INDEX

IN TYPE NUMBER SEQUENCE

TYPE No.	MFRS	Pg&Line
TPA160B18	♦THEF	329 - 5
TPA180A12	♦THEF	329 - 6
TPA180A18	♦THEF	329 - 7
TPA180B12	♦THEF	329 - 8
TPA180B18	♦THEF	329 - 9
TPA200A12	♦THEF	329 - 10
TPA200A18	♦THEF	329 - 11
TPA200B12	♦THEF	329 - 12
TPA200B18	♦THEF	329 - 13
TPA220A12	♦THEF	329 - 14
TPA220A18	♦THEF	329 - 15
TPA220B12	♦THEF	329 - 16
TPA220B18	♦THEF	329 - 17
TPA240A12	♦THEF	329 - 18
TPA240A18	♦THEF	329 - 19
TPA240B12	♦THEF	329 - 20
TPA240B18	♦THEF	329 - 21
TPA270A12	♦THEF	329 - 22
TPA270A18	♦THEF	329 - 23
TPA270B12	♦THEF	329 - 24
TPA270B18	♦THEF	329 - 25
TPF16	♦SOD	412 - 78
TPF20	♦SOD	415 - 79
TPF30	♦SOD	419 -161
TPF40	♦SOD	422 - 23
TPF50	♦SOD	424 - 17
TPF60	♦SOD	425 - 10
TPF70	♦SOD	425 -112
TPF80	♦SOD	426 -103
TPF90	♦SOD	426 -186
TPF100	♦SOD	427 -189
TPF150	♦SOD	429 -139
TPF200	♦SOD	430 -192
TPF250	♦SOD	431 -161
TPF300	♦SOD	432 - 88
TPF350	♦SOD	432 -137
TPF400	♦SOD	432 -195
TPF450	♦SOD	433 - 21
TPF500	♦SOD	433 - 70
TPF750	♦SOD	433 -104
TPF1000	♦SOD	433 -144
TPF1200	♦SOD	433 -171
TPFHV16	♦SOD	412 - 60
TPFHV20	♦SOD	415 - 59
TPFHV30	♦SOD	419 -140
TPFHV40	♦SOD	422 - 1
TPFHV50	♦SOD	423 -180
TPFHV60	♦SOD	424 -210
TPFHV70	♦SOD	425 - 96
TPFHV80	♦SOD	426 - 82
TPFHV90	♦SOD	426 -174
TPFHV100	♦SOD	427 -141
TPFHV150	♦SOD	429 -105
TPFHV200	♦SOD	430 -177
TPFHV250	♦SOD	431 -141
TPFHV300	♦SOD	432 - 73
TPFHV350	♦SOD	432 -128
TPFHV400	♦SOD	432 -181
TPFHV450	♦SOD	433 - 12
TPFHV500	♦SOD	433 - 58
TPFHV750	♦SOD	433 - 94
TPFHV1000	♦SOD	433 -135
TPFHV1200	♦SOD	433 -162
TPH16	♦SOD	412 - 79
TPH20	♦SOD	415 - 80
TPH30	♦SOD	419 -162
TPH40	♦SOD	422 - 24
TPH50	♦SOD	424 - 18
TPH60	♦SOD	425 - 11
TPH70	♦SOD	425 -113
TPH80	♦SOD	426 -104
TPH90	♦SOD	426 -187
TPH100	♦SOD	427 -190
TPH150	♦SOD	429 -140
TPH200	♦SOD	430 -193
TPH250	♦SOD	431 -162
TPH300	♦SOD	432 - 89
TPH350	♦SOD	432 -138
TPH400	♦SOD	432 -196
TPH450	♦SOD	433 - 22
TPH500	♦SOD	433 - 71
TPH750	♦SOD	433 -105
TPH1000	♦SOD	433 -145
TPH1200	♦SOD	433 -172
TPHHV16	♦SOD	412 - 61
TPHHV20	♦SOD	415 - 60
TPHHV30	♦SOD	419 -141
TPHHV40	♦SOD	422 - 2
TPHHV50	♦SOD	423 -181
TPHHV60	♦SOD	424 -211
TPHHV70	♦SOD	425 - 97
TPHHV80	♦SOD	426 - 83
TPHHV90	♦SOD	426 -175
TPHHV100	♦SOD	427 -142
TPHHV150	♦SOD	429 -106
TPHHV200	♦SOD	430 -178
TPHHV250	♦SOD	431 -142
TPHHV300	♦SOD	432 - 74
TPHHV350	♦SOD	432 -129
TPHHV400	♦SOD	432 -182
TPHHV450	♦SOD	433 - 13
TPHHV500	♦SOD	433 - 59
TPHHV750	♦SOD	433 - 95
TPHHV1000	♦SOD	433 -136
TPHHV1200	♦SOD	433 -163
TR15	♦EDI	242 - 99
TR18	♦EDI	242 -109
TR20	♦EDI	242 -123
TR22	♦EDI	242 -124
TRA1102	♦SSEI	300 -189
TRA1105	♦SSEI	300 -202
TRA1110	♦SSEI	300 -213
TRA1120	♦SSEI	300 -218
TRA1130	♦SSEI	301 - 22
TRA1140	♦SSEI	301 - 26
TS3	♦SOD	251 -196
TS5	♦SOD	252 -107
TS10	♦SOD	253 - 74
TS20	♦SOD	254 - 70
TS30	♦SOD	254 -143
TS40	♦SOD	254 -219
TS50	♦SOD	255 - 56
TS60	♦SOD	255 -117
TS80	♦SOD	255 -205
TS0600	♦MSC	174 - 4
TS04700	♦MSC	170 - 43
TS05100	♦MSC	171 -124
TS05600	♦MSC	173 - 2
TS06000	♦MSC	174 - 5
TS06200	♦MSC	175 - 67
TS06800	♦MSC	176 - 36
TS07100	♦MSC	179 - 60
TS07500	♦MSC	180 - 34
TS08200	♦MSC	182 - 13
TS08700	♦MSC	183 -175
TS09100	♦MSC	185 - 49
TS10000	♦MSC	187 - 95
TS-7	♦MSC	354 -105
TSC4728CHIP	TSN	166 - 67
TSC4729CHIP	TSN	167 - 32
TSC4730CHIP	TSN	168 - 11
TSC4731CHIP	TSN	169 - 32
TSC4732CHIP	TSN	170 - 83
TSC4733CHIP	TSN	171 -165
TSC4734CHIP	TSN	173 - 48
TSC4735CHIP	TSN	175 -110
TSC4736CHIP	TSN	178 - 88
TSC4737CHIP	TSN	180 - 82
TSC4738CHIP	TSN	182 - 65
TSC4739CHIP	TSN	185 - 99
TSC4740CHIP	TSN	187 -153
TSC6082CHIP	TSN	168 -125
TSC6083CHIP	TSN	169 -151
TSC6084CHIP	TSN	171 - 31
TSC6085CHIP	TSN	172 - 97
TSC6086CHIP	TSN	174 - 79
TSC6087CHIP	TSN	177 -136
TSC6088CHIP	TSN	179 -135
TSC6089CHIP	TSN	181 -107
TSC6090CHIP	TSN	184 -129
TSC6091CHIP	TSN	186 -186
TSD6100	SPR	231 - 37
TSD7000	SPR	231 - 38
TSV	SOD	251 -158
TSZ5.1	♦SELI	171 -158
TSZ5.6	♦SELI	173 - 40
TSZ6.2	♦SELI	175 -103
TSZ6.8	♦SELI	178 - 77
TSZ7.5	♦SELI	180 - 72
TSZ8.2	♦SELI	182 - 55
TSZ9.1	♦SELI	185 - 90
TSZ10	♦SELI	187 -140
TSZ11	♦SELI	189 - 64
TSZ12	♦SELI	191 - 26
TV9Si	♦AEGG	429 - 11
TV13Si	♦AEGG	430 - 69
TV16Si	♦AEGG	431 - 15
TV18Si	♦AEGG	432 -107
TV2202F	♦THEF	263 -215
TV2204F	♦THEF	264 - 2
TV2206F	♦THEF	264 - 12
TV2208F	♦THEF	264 - 18
TV2210F	♦THEF	264 - 26
TV2212F	♦THEF	264 - 34
TV2214F	♦THEF	264 - 39
TV2215F	♦THEF	264 - 42
TV3002	♦THEF	310 - 57
TV3004	♦THEF	310 - 75
TV3006	♦THEF	310 - 90
TV3008	♦THEF	310 -107
TV3010	♦THEF	404 -160
TV3012	♦THEF	408 - 36
TV3014	♦THEF	410 - 77
TV3016	♦THEF	413 - 37
TV3018	♦THEF	414 - 45
TV3020	♦THEF	415 -146
TVR1B	IMTM	248 -112
	TOSJ	
TVR1D	IMTM	248 -117
	TOSJ	
TVR1G	IMTM	248 -124
	TOSJ	
TVR1J	IMTM	248 -132
	TOSJ	
TVS5-1(M)	♦UNI	329 - 26
TVS5-2(M)	♦UNI	329 - 27
TVS5-3(M)	♦UNI	329 - 28
TVS305	♦UNI	329 - 29
TVS310	♦UNI	329 - 30
TVS312	♦UNI	329 - 31
TVS315	♦UNI	329 - 32
TVS318	♦UNI	329 - 33
TVS324	♦UNI	329 - 34
TVS328	♦UNI	329 - 35
TVS348	♦UNI	329 - 36
TVS360	♦UNI	329 - 37
TVS410	♦UNI	329 - 38
TVS420	♦UNI	329 - 39
TVS430	♦UNI	329 - 40
TVS505	♦UNI	329 - 41
TVS510	♦UNI	329 - 42
TVS512	♦UNI	329 - 43
TVS515	♦UNI	329 - 44
TVS518	♦UNI	329 - 45
TVS524	♦UNI	329 - 46
TVS528	♦UNI	329 - 47
TZ4.7	RHMJ	169 -177
TZ5.1	RHMJ	171 - 54
TZ5.6	RHMJ	172 -134
TZ6.2	RHMJ	174 -146
TZ6.8	RHMJ	177 -171
TZ7.5	RHMJ	179 -165
TZ8.2	RHMJ	181 -146
TZ9.1	RHMJ	184 -193
TZ10	RHMJ	187 - 17
TZ11	RHMJ	188 -182
TZ12	RHMJ	190 -140
TZ13	RHMJ	192 -117
TZ16	RHMJ	196 - 46
TZ17	SAR	329 - 48
TZ17A	SAR	329 - 49
TZ18	RHMJ	198 - 49
	SAR	
TZ18A	SAR	329 - 50
TZ20	RHMJ	200 - 51
	SAR	
TZ20A	SAR	329 - 51
TZ22	RHMJ	201 -154
	SAR	
TZ22A	SAR	329 - 52
TZ24	RHMJ	203 - 59
	SAR	
TZ24A	SAR	329 - 53
TZ26	SAR	329 - 54
TZ26A	SAR	329 - 55
TZ28	SAR	329 - 56
TZ28A	SAR	329 - 57
TZ30	SAR	329 - 58
TZ30A	SAR	329 - 59
TZ33	SAR	329 - 60
TZ33A	SAR	329 - 61
TZ36	SAR	329 - 62
TZ36A	SAR	329 - 63
TZ40	SAR	329 - 64
TZ40A	SAR	329 - 65
TZ43	SAR	329 - 66
TZ43A	SAR	329 - 67
TZ45	SAR	329 - 68
TZ45A	SAR	329 - 69
TZ48	SAR	329 - 70
TZ48A	SAR	329 - 71
TZ51	SAR	329 - 72
TZ51A	SAR	329 - 73
TZ54	SAR	329 - 74
TZ54A	SAR	329 - 75
TZ58	SAR	329 - 76
TZ58A	SAR	329 - 77
TZ60	SAR	329 - 78
TZ60A	SAR	329 - 79
TZ64	SAR	329 - 80
TZ64A	SAR	329 - 81
TZ70	SAR	329 - 82
TZ70A	SAR	329 - 83
TZ75	SAR	329 - 84
TZ75A	SAR	329 - 85
TZ78	SAR	329 - 86
TZ78A	SAR	329 - 87
TZ85	SAR	329 - 88
TZ85A	SAR	329 - 89
TZ90	SAR	329 - 90
TZ90A	SAR	329 - 91
TZ100	SAR	329 - 92
TZ100A	SAR	329 - 93
TZ110	SAR	329 - 94
TZ110A	SAR	329 - 95
TZ120	SAR	329 - 96
TZ120A	SAR	329 - 97
TZ130	SAR	329 - 98
TZ130A	SAR	329 - 99
TZ150	SAR	329 -100
TZ150A	SAR	329 -101
TZ160	SAR	329 -102
TZ160A	SAR	329 -103
TZ170	SAR	329 -104
TZ170A	SAR	329 -105
TZ180	SAR	329 -106
TZ180A	SAR	329 -107
TZ200	SAR	329 -108
TZ200A	SAR	329 -109
TZ220	SAR	329 -110
TZ220A	SAR	330 - 1
TZ240	SAR	330 - 2
TZ240A	SAR	330 - 3
TZ260	SAR	330 - 4
TZ260A	SAR	330 - 5
TZ280	SAR	330 - 6
TZ280A	SAR	330 - 7
TZB6.8A	♦SCN	178 -137
TZB6.8B	♦SCN	178 -117
TZB7.5A	♦SCN	180 -129
TZB7.5B	♦SCN	180 -110
TZB8.2A	♦SCN	182 -118
TZB8.2B	♦SCN	182 - 94
TZB9.1A	♦SCN	185 -146
TZB9.1B	♦SCN	185 -127
TZB10A	♦SCN	188 - 5
TZB10B	♦SCN	187 -188
TZB11A	♦SCN	189 -120
TZB11B	♦SCN	189 -100
TZB12A	♦SCN	191 - 94
TZB12B	♦SCN	191 - 69
TZB13A	♦SCN	193 - 38
TZB13B	♦SCN	193 - 17
TZB15A	♦SCN	195 - 93
TZB15B	♦SCN	195 - 67
TZB16A	♦SCN	196 -182
TZB16B	♦SCN	196 -160
TZB18A	♦SCN	198 -201
TZB18B	♦SCN	198 -176
TZB20A	♦SCN	200 -191
TZB20B	♦SCN	200 -166
TZB22A	♦SCN	202 - 91
TZB22B	♦SCN	202 - 67
TZB24A	♦SCN	203 -186
TZB24B	♦SCN	203 -165
TZB27A	♦SCN	205 -129
TZB27B	♦SCN	205 -103
TZB30A	♦SCN	207 - 53
TZB30B	♦SCN	207 - 28
TZB33A	♦SCN	208 -146
TZB33B	♦SCN	208 -122
TZB36A	♦SCN	209 -202
TZB36B	♦SCN	209 -186
TZB39A	♦SCN	211 - 37
TZB39B	♦SCN	211 - 21
TZB43A	♦SCN	212 - 46
TZB43B	♦SCN	212 - 31
TZB47A	♦SCN	213 - 62
TZB47B	♦SCN	213 - 46
TZB51A	♦SCN	214 - 57
TZB51B	♦SCN	214 - 43
TZB56A	♦SCN	215 - 46
TZB56B	♦SCN	215 - 29
TZB62A	♦SCN	216 - 51
TZB62B	♦SCN	216 - 36
TZB68A	♦SCN	217 - 32
TZB68B	♦SCN	217 - 16
TZB75A	♦SCN	218 - 14
TZB75B	♦SCN	217 -198
TZB82A	♦SCN	218 -194
TZB82B	♦SCN	218 -178
TZB91A	♦SCN	219 -173
TZB91B	♦SCN	219 -158
TZB100A	♦SCN	220 -134
TZB100B	♦SCN	220 -117
TZB110A	♦SCN	221 - 96
TZB110B	♦SCN	221 - 80
TZB120A	♦SCN	222 - 47
TZB120B	♦SCN	222 - 30
TZB130A	♦SCN	223 - 2
TZB130B	♦SCN	222 -175
TZB150A	♦SCN	224 - 35
TZB150B	♦SCN	224 - 19
TZB160A	♦SCN	224 -165
TZB160B	♦SCN	224 -151
TZB170A	♦SCN	225 - 71
TZB170B	♦SCN	225 - 66
TZB180A	♦SCN	225 -174
TZB180B	♦SCN	225 -157
TZB200A	♦SCN	226 -176
TZB200B	♦SCN	226 -161
TZB220A	♦SCN	227 - 73
TZB220B	♦SCN	227 - 72
TZB250A	♦SCN	227 - 92
TZB250B	♦SCN	227 - 91
TZB300A	♦SCN	227 -121
TZB300B	♦SCN	227 -120
TZB350A	♦SCN	227 -157
TZB350B	♦SCN	227 -156
TZB400A	♦SCN	227 -185
TZB400B	♦SCN	227 -184
TZC6.8,A,B,D	♦SCN	379 - 19
TZC6.8C	♦SCN	379 - 7
TZC6.8E	♦SCN	379 - 9
TZC7.5,A,B,D	♦SCN	379 -131
TZC7.5C	♦SCN	379 -119
TZC7.5E	♦SCN	379 -121
TZC8.2,A,B,D	♦SCN	380 - 52
TZC8.2C	♦SCN	380 - 39
TZC8.2E	♦SCN	380 - 41
TZC9.1,A,B,D	♦SCN	380 -180
TZC9.1C	♦SCN	380 -168
TZC9.1E	♦SCN	380 -170
TZC10,A,B,D	♦SCN	381 - 79
TZC10C	♦SCN	381 - 67
TZC10E	♦SCN	381 - 69
TZC11,A,B,D	♦SCN	381 -189
TZC11C	♦SCN	381 -180
TZC11E	♦SCN	381 -182
TZC12,A,B,D	♦SCN	382 - 87
TZC12C	♦SCN	382 - 74
TZC12E	♦SCN	382 - 76
TZC13,A,B,D	♦SCN	383 - 4
TZC13C	♦SCN	382 -190
TZC13E	♦SCN	382 -192
TZC14,A,B,D	♦SCN	383 -100
TZC14C	♦SCN	383 - 91
TZC14E	♦SCN	383 - 93
TZC15,A,B,D	♦SCN	383 -167
TZC15C	♦SCN	383 -154
TZC15E	♦SCN	383 -156
TZC17,A,B,D	♦SCN	384 -173
TZC17C	♦SCN	384 -167
TZC17E	♦SCN	384 -169
TZC18,A,B,D	♦SCN	385 - 33
TZC18C	♦SCN	385 - 20
TZC18E	♦SCN	385 - 22
TZC19,A,B,D	♦SCN	385 -138
TZC19C	♦SCN	385 -132
TZC19E	♦SCN	385 -134
TZC20,A,B,D	♦SCN	385 -187
TZC20C	♦SCN	385 -174
TZC20E	♦SCN	385 -176
TZC22,A,B,D	♦SCN	386 - 92
TZC22C	♦SCN	386 - 79
TZC22E	♦SCN	386 - 81
TZC24,A,B,D	♦SCN	387 - 8
TZC24C	♦SCN	386 -195
TZC24E	♦SCN	386 -197
TZC25,A,B,D	♦SCN	387 -105
TZC25C	♦SCN	387 - 99
TZC25E	♦SCN	387 -101
TZC27,A,B,D	♦SCN	387 -146
TZC27C	♦SCN	387 -133
TZC27E	♦SCN	387 -135
TZC30,A,B,D	♦SCN	388 - 66
TZC30C	♦SCN	388 - 53
TZC30E	♦SCN	388 - 55
TZC33,A,B,D	♦SCN	388 -171
TZC33C	♦SCN	388 -158
TZC33E	♦SCN	388 -160
TZC36,A,B,D	♦SCN	389 - 85
TZC36C	♦SCN	389 - 72
TZC36E	♦SCN	389 - 74
TZC39,A,B,D	♦SCN	389 -187
TZC39C	♦SCN	389 -176
TZC39E	♦SCN	389 -178
TZC43,A,B,D	♦SCN	390 - 98
TZC43C	♦SCN	390 - 87
TZC43E	♦SCN	390 - 89
TZC45,A,B,D	♦SCN	390 -177
TZC45C	♦SCN	390 -170
TZC45E	♦SCN	390 -172
TZC47,A,B,D	♦SCN	391 - 30
TZC47C	♦SCN	391 - 18
TZC47E	♦SCN	391 - 20
TZC50,A,B,D	♦SCN	391 -117
TZC50C	♦SCN	391 -110
TZC50E	♦SCN	391 -112
TZC51,A,B,D	♦SCN	391 -168
TZC51C	♦SCN	391 -157
TZC51E	♦SCN	391 -159
TZC52,A,B,D	♦SCN	392 - 39
TZC52C	♦SCN	392 - 35
TZC52E	♦SCN	392 - 37
TZC56,A,B,D	♦SCN	392 - 78
TZC56C	♦SCN	392 - 65
TZC56E	♦SCN	392 - 67
TZC62,A,B,D	♦SCN	393 - 3
TZC62C	♦SCN	392 -191
TZC62E	♦SCN	392 -193
TZC68,A,B,D	♦SCN	393 - 92
TZC68C	♦SCN	393 - 81
TZC68E	♦SCN	393 - 83
TZC75,A,B,D	♦SCN	394 - 7
TZC75C	♦SCN	393 -192
TZC75E	♦SCN	393 -194
TZC82,A,B,D	♦SCN	394 -120
TZC82C	♦SCN	394 -109
TZC82E	♦SCN	394 -111
TZC91,A,B,D	♦SCN	395 - 31
TZC91C	♦SCN	395 - 20
TZC91E	♦SCN	395 - 22
TZC100,A,B,D	♦SCN	395 -123
TZC100C	♦SCN	395 -110
TZC100E	♦SCN	395 -112
TZC105,A,B,D	♦SCN	396 - 20
TZC105C	♦SCN	396 - 16
TZC105E	♦SCN	396 - 18
TZC110,A,B,D	♦SCN	396 - 57
TZC110C	♦SCN	396 - 47
TZC110E	♦SCN	396 - 49
TZC120,A,B,D	♦SCN	396 -143
TZC120C	♦SCN	396 -133
TZC120E	♦SCN	396 -135
TZC130,A,B,D	♦SCN	397 - 32
TZC130C	♦SCN	397 - 22
TZC130E	♦SCN	397 - 24
TZC140,A,B,D	♦SCN	397 -116
TZC140C	♦SCN	397 -108
TZC140E	♦SCN	397 -110
TZC150,A,B,D	♦SCN	397 -169
TZC150C	♦SCN	397 -159
TZC150E	♦SCN	397 -161
TZC160,A,B,D	♦SCN	398 - 59
TZC160C	♦SCN	398 - 49
TZC160E	♦SCN	398 - 51
TZC180,A,B,D	♦SCN	398 -172
TZC180C	♦SCN	398 -162
TZC180E	♦SCN	398 -164
TZC200,A,B,D	♦SCN	399 - 81
TZC200C	♦SCN	399 - 71
TZC200E	♦SCN	399 - 73
TZPD2.7	♦MSC	164 -127
TZPD3	♦MSC	165 - 51
TZPD3.3	♦MSC	165 -177
TZPD3.6	♦MSC	166 -149
TZPD3.9	♦MSC	167 -108
TZPD4.3	♦MSC	168 -119
TZPD4.7	♦MSC	169 -143
TZPD5.1	♦MSC	171 - 23
TZPD5.6	♦MSC	172 - 89
TZPD6.2	♦MSC	174 - 51
TZPD6.8	♦MSC	177 -125
TZPD7.5	♦MSC	179 -125
TZPD8.2	♦MSC	181 - 98
TZPD9.1	♦MSC	184 -119
TZPD10	♦MSC	186 -171
TZPD11	♦MSC	188 -147
TZPD12	♦MSC	190 - 90
TZPD13	♦MSC	192 - 86
TZPD15	♦MSC	194 - 99
TZPD16	♦MSC	196 - 16
TZPD18	♦MSC	198 - 8
TZPD20	♦MSC	200 - 21
TZPD22	♦MSC	201 -113
TZPD24	♦MSC	203 - 33
TZPD27	♦MSC	204 -166
TZPD30	♦MSC	206 -104
TZPY3.9	♦MSC	167 -109
TZPY4.3	♦MSC	168 -120
TZPY4.7	♦MSC	169 -144
TZPY5.1	♦MSC	171 - 24
TZPY5.6	♦MSC	172 - 90
TZPY6.2	♦MSC	174 - 52
TZPY6.8	♦MSC	177 -126
TZPY7.5	♦MSC	179 -126
TZPY8.2	♦MSC	181 - 99
TZPY9.1	♦MSC	184 -120
TZPY10	♦MSC	186 -172

Δ-Registered with JEDEC by this manufacturer

♦-Mfr's data sheet available in microfilm service

1. TYPE No. CROSS INDEX

IN TYPE NUMBER SEQUENCE

TYPE No.	MFRS	Pg&Line
TZPY11	♦MSC	188 -148
TZPY12	♦MSC	190 - 91
TZPY13	♦MSC	192 - 87
TZPY15	♦MSC	194 -100
TZPY16	♦MSC	196 - 17
TZPY18	♦MSC	198 - 9
TZPY20	♦MSC	200 - 22
TZPY22	♦MSC	201 -114
TZPY24	♦MSC	203 - 34
TZPY27	♦MSC	204 -167
TZPY30	♦MSC	206 -105
TZPY33	♦MSC	207 -187
TZPY36	♦MSC	209 - 81
TZPY39	♦MSC	210 -117
TZPY43	♦MSC	211 -145
TZPY47	♦MSC	212 -151
TZPY51	♦MSC	213 -175
TZPY56	♦MSC	214 -150
TZPY62	♦MSC	215 -164
TZPY68	♦MSC	216 -137
TZPY75	♦MSC	217 -133
TZPY82	♦MSC	218 -114
TZPY91	♦MSC	219 -106
TZPY100	♦MSC	220 - 54
TZV6.2	♦SCN	354 -106
TZV6.2A	♦SCN	354 -107
TZV6.8	♦SCN	354 -108
TZV6.8A	♦SCN	354 -109
TZV7.5	♦SCN	354 -110
TZV7.5A	♦SCN	355 - 1
TZV8.2	♦SCN	355 - 2
TZV8.2A	♦SCN	355 - 3
TZV9.1	♦SCN	355 - 4
TZV9.1A	♦SCN	355 - 5
TZV10	♦SCN	355 - 6
TZV10A	♦SCN	355 - 7
TZV11	♦SCN	355 - 8
TZV11A	♦SCN	355 - 9
TZV12	♦SCN	355 - 10
TZV12A	♦SCN	355 - 11
TZV13	♦SCN	355 - 12
TZV13A	♦SCN	355 - 13
TZV15	♦SCN	355 - 14
TZV15A	♦SCN	355 - 15
TZV16	♦SCN	355 - 16
TZV16A	♦SCN	355 - 17
TZV18	♦SCN	355 - 18
TZV18A	♦SCN	355 - 19
TZV20	♦SCN	355 - 20
TZV20A	♦SCN	355 - 21
TZV22	♦SCN	355 - 22
TZV22A	♦SCN	355 - 23
TZV24	♦SCN	355 - 24
TZV24A	♦SCN	355 - 25
TZV27	♦SCN	355 - 26
TZV27A	♦SCN	355 - 27
TZV30	♦SCN	355 - 28
TZV30A	♦SCN	355 - 29
TZV33	♦SCN	355 - 30
TZV33A	♦SCN	355 - 31
TZV36	♦SCN	355 - 32
TZV36A	♦SCN	355 - 33
TZV39	♦SCN	355 - 34
TZV39A	♦SCN	355 - 35
TZV43	♦SCN	355 - 36
TZV43A	♦SCN	355 - 37
TZV47	♦SCN	355 - 38
TZV47A	♦SCN	355 - 39
TZV51	♦SCN	355 - 40
TZV51A	♦SCN	355 - 41
TZV56	♦SCN	355 - 42
TZV56A	♦SCN	355 - 43
TZV62	♦SCN	355 - 44
TZV62A	♦SCN	355 - 45
TZV68	♦SCN	355 - 46
TZV68A	♦SCN	355 - 47
TZV75	♦SCN	355 - 48
TZV75A	♦SCN	355 - 49
TZV82	♦SCN	355 - 50
TZV82A	♦SCN	355 - 51
TZV91	♦SCN	355 - 52
TZV91A	♦SCN	355 - 53
TZV100	♦SCN	355 - 54
TZV100A	♦SCN	355 - 55
TZV110	♦SCN	355 - 56
TZV110A	♦SCN	355 - 57
TZV120	♦SCN	355 - 58
TZV120A	♦SCN	355 - 59
TZV130	♦SCN	355 - 60
TZV130A	♦SCN	355 - 61
TZV150	♦SCN	355 - 62
TZV150A	♦SCN	355 - 63
TZV160	♦SCN	355 - 64
TZV160A	♦SCN	355 - 65
TZV170	♦SCN	355 - 66
TZV170A	♦SCN	355 - 67
TZV180	♦SCN	355 - 68
TZV180A	♦SCN	355 - 69
TZV200	♦SCN	355 - 70
TZV200A	♦SCN	355 - 71
uPA54H	♦NECJ	314 - 23
uPA64H	♦NECJ	314 - 24
U05B	♦HITJ	287 - 21
U05C	♦HITJ	287 - 42
U05E	♦HITJ	287 - 71
U05G	♦HITJ	287 - 98
U05J	♦HITJ	287 -126
U06C	♦HITJ	241 - 78
U06E	♦HITJ	241 - 88
U06G	♦HITJ	241 - 97
U06J	HITJ	241 -103
U07J	♦HITJ	241 -104
U07L	♦HITJ	241 -122
U07M	♦HITJ	241 -129

TYPE No.	MFRS	Pg&Line
U07N	♦HITJ	241 -139
U15B	♦HITJ	288 -129
U15C	♦HITJ	288 -161
U15E	♦HITJ	289 - 27
U15G	♦HITJ	289 -158
U15J	♦HITJ	402 -190
U17B	♦HITJ	444 - 74
U17C	♦HITJ	444 - 75
U17D	♦HITJ	444 - 76
U17E	♦HITJ	444 - 77
U19B	♦HITJ	241 - 69
U19C	♦HITJ	241 - 74
U19E	♦HITJ	241 - 84
U30J	♦HITJ	401 -218
U30L	♦HITJ	408 -185
U30M	♦HITJ	412 - 48
U30N	♦HITJ	413 -213
U31J	♦HITJ	401 -220
U31L	♦HITJ	408 -186
U31M	♦HITJ	412 - 49
U31N	♦HITJ	413 -214
U32J	♦HITJ	402 - 8
U32L	♦HITJ	408 -188
U32M	♦HITJ	412 - 50
U32N	♦HITJ	413 -215
UBS430	♦UNI	301 - 87
UC1610(M)	♦UNI	315 - 13
UC3610(M)	♦UNI	315 - 18
UDC5	♦UNI	261 -186
UDC7.5	♦UNI	261 -195
UDC10	♦UNI	261 -202
UDC15	♦UNI	261 -205
UDD2.5	♦UNI	261 -179
UDD5	♦UNI	261 -187
UDD7.5	♦UNI	261 -196
UDE2.5	♦UNI	417 -190
UDE5	♦UNI	424 - 29
UDF2.5	♦UNI	261 -180
UDF5	♦UNI	261 -188
UDZ110	UNI	229 -118
UDZ122	UNI	230 - 9
UDZ130	UNI	227 -124
UDZ210	♦UNI	221 - 1
UDZ222	♦UNI	227 - 78
UDZ230	♦UNI	227 -127
UDZ707	♦UNI	180 -183
UDZ708	♦UNI	182 -173
UDZ709	♦UNI	186 - 4
UDZ710	♦UNI	188 - 73
UDZ712	♦UNI	191 -161
UDZ715	♦UNI	195 -157
UDZ718	♦UNI	199 - 56
UDZ720	♦UNI	201 - 49
UDZ724	♦UNI	204 - 42
UDZ727	♦UNI	205 -197
UDZ730	♦UNI	207 -122
UDZ733	♦UNI	209 - 8
UDZ736	♦UNI	210 - 62
UDZ740	♦UNI	211 -128
UDZ745	♦UNI	212 -140
UDZ760	♦UNI	215 -157
UDZ807	♦UNI	228 -104
UDZ808	♦UNI	228 -113
UDZ809	♦UNI	228 -121
UDZ810	♦UNI	228 -129
UDZ812	♦UNI	228 -140
UDZ815	♦UNI	228 -152
UDZ818	♦UNI	228 -164
UDZ820	♦UNI	228 -172
UDZ824	♦UNI	228 -185
UDZ827	♦UNI	229 - 8
UDZ830	♦UNI	229 - 19
UDZ833	♦UNI	229 - 26
UDZ836	♦UNI	229 - 36
UDZ840	♦UNI	229 - 44
UDZ845	♦UNI	229 - 54
UDZ860	♦UNI	229 - 78
UDZ5110	UNI	395 -124
UDZ5122	UNI	399 -147
UDZ5130	UNI	399 -185
UDZ5210	♦UNI	395 -134
UDZ5222	♦UNI	399 -150
UDZ5230	♦UNI	399 -188
UDZ5707	♦UNI	379 -132
UDZ5708	♦UNI	380 - 53
UDZ5709	♦UNI	380 -181
UDZ5710	♦UNI	381 - 80
UDZ5712	♦UNI	382 - 88
UDZ5715	♦UNI	383 -168
UDZ5718	♦UNI	385 - 34
UDZ5720	♦UNI	385 -188
UDZ5724	♦UNI	387 - 9
UDZ5727	♦UNI	387 -147
UDZ5730	♦UNI	388 - 67
UDZ5733	♦UNI	388 -172
UDZ5736	♦UNI	389 - 86
UDZ5740	♦UNI	390 - 67
UDZ5745	♦UNI	390 -178
UDZ5760	♦UNI	392 -168
UDZ5807	♦UNI	379 -141
UDZ5808	♦UNI	380 - 63
UDZ5809	♦UNI	380 -191
UDZ5810	♦UNI	381 - 89
UDZ5812	♦UNI	382 - 98
UDZ5815	♦UNI	383 -178
UDZ5818	♦UNI	385 - 44
UDZ5820	♦UNI	385 -198
UDZ5824	♦UNI	387 - 19
UDZ5827	♦UNI	387 -157
UDZ5830	♦UNI	388 - 77
UDZ5833	♦UNI	388 -182
UDZ5836	♦UNI	389 - 96
UDZ5840	♦UNI	390 - 71
UDZ5845	♦UNI	390 -184

TYPE No.	MFRS	Pg&Line
UDZ5860	♦UNI	392 -173
UDZ7110	UNI	395 -147
UDZ7210	♦UNI	395 -150
UDZ7707	UNI	379 -151
UDZ7708	UNI	380 - 75
UDZ7709	UNI	380 -202
UDZ7710	UNI	381 -100
UDZ7712	UNI	382 -109
UDZ7715	UNI	383 -190
UDZ7718	UNI	385 - 56
UDZ7720	UNI	386 - 9
UDZ7724	UNI	387 - 31
UDZ7727	UNI	387 -170
UDZ7730	UNI	388 - 89
UDZ7733	UNI	388 -195
UDZ7736	UNI	389 -108
UDZ7740	UNI	390 - 78
UDZ7745	UNI	390 -192
UDZ7760	UNI	392 -182
UDZ7807	♦UNI	379 -174
UDZ7808	♦UNI	380 - 77
UDZ7809	♦UNI	380 -204
UDZ7810	♦UNI	381 -103
UDZ7812	♦UNI	382 -111
UDZ7815	♦UNI	383 -192
UDZ7818	♦UNI	385 - 58
UDZ7820	♦UNI	386 - 11
UDZ7824	♦UNI	387 - 33
UDZ7827	♦UNI	387 -172
UDZ7830	♦UNI	388 - 91
UDZ7833	♦UNI	388 -197
UDZ7836	♦UNI	389 -110
UDZ7840	♦UNI	390 - 79
UDZ7845	♦UNI	390 -193
UDZ7860	♦UNI	392 -184
UDZ8707	♦UNI	228 -100
UDZ8708	♦UNI	228 -109
UDZ8709	♦UNI	228 -117
UDZ8710	♦UNI	228 -125
UDZ8712	♦UNI	228 -136
UDZ8715	♦UNI	228 -148
UDZ8718	♦UNI	228 -160
UDZ8720	♦UNI	228 -168
UDZ8724	♦UNI	228 -180
UDZ8727	♦UNI	229 - 3
UDZ8730	♦UNI	229 - 14
UDZ8733	♦UNI	229 - 21
UDZ8736	♦UNI	229 - 31
UDZ8740	♦UNI	229 - 42
UDZ8745	♦UNI	229 - 52
UDZ8760	♦UNI	229 - 76
UDZ8807	♦UNI	228 -102
UDZ8808	♦UNI	228 -111
UDZ8809	♦UNI	228 -119
UDZ8810	♦UNI	228 -127
UDZ8812	♦UNI	228 -138
UDZ8815	♦UNI	228 -150
UDZ8818	♦UNI	228 -162
UDZ8820	♦UNI	228 -170
UDZ8824	♦UNI	228 -182
UDZ8827	♦UNI	229 - 5
UDZ8830	♦UNI	229 - 16
UDZ8833	♦UNI	229 - 23
UDZ8836	♦UNI	229 - 33
UDZ8840	♦UNI	229 - 43
UDZ8845	♦UNI	229 - 53
UDZ8860	♦UNI	229 - 77
UES101	♦UNI	252 - 22
UES102	♦UNI	252 -181
UES103	♦UNI	252 -207
UES104	♦UNI	253 -124
UES201	♦UNI	257 -104
UES202	♦UNI	257 -211
UES203	♦UNI	258 - 5
UES204	♦UNI	258 -156
UES501	♦UNI	257 -134
UES502	♦UNI	257 -213
UES503	♦UNI	258 - 41
UES504	♦UNI	258 -158
UES505	♦UNI	258 -192
UES601	♦UNI	252 - 67
UES602	♦UNI	253 - 33
UES603	♦UNI	253 -214
UES701	♦UNI	252 - 43
UES702	♦UNI	253 - 10
UES703	♦UNI	253 -193
UES704	♦UNI	298 -175
UES705	♦UNI	299 - 6
UES706	♦UNI	299 - 30
UES801	♦UNI	252 - 68
UES802	♦UNI	253 - 34
UES803	♦UNI	253 -215
UES804	♦UNI	254 - 36
UES805	♦UNI	254 -119
UES806	♦UNI	254 -164
UES1001	♦UNI	252 - 23
UES1002	♦UNI	252 -208
UES1003	♦UNI	253 -175
UES1101	♦UNI	252 - 24
UES1102	♦UNI	252 -209
UES1103	♦UNI	253 -176
UES1104	♦UNI	254 - 37
UES1105	♦UNI	254 -120
UES1106	♦UNI	254 -165
UES1301	♦UNI	252 - 31
UES1302	♦UNI	252 -217
UES1303	♦UNI	253 -182
UES1304	♦UNI	254 - 38
UES1305	♦UNI	254 -121
UES1306	♦UNI	254 -166
UES1401	♦UNI	252 - 44
UES1402	♦UNI	253 - 11
UES1403	♦UNI	253 -194
UES1404(M)	♦UNI	254 - 26

TYPE No.	MFRS	Pg&Line
UES1501(M)	♦UNI	252 - 45
UES1502(M)	♦UNI	253 - 12
UES1503(M)	♦UNI	253 -195
UES1504(M)	♦UNI	254 - 27
UES2401	♦UNI	252 - 46
UES2402	♦UNI	253 - 13
UES2403	♦UNI	253 -196
UES2404(M)	♦UNI	254 - 28
UES2601	♦UNI	252 - 47
UES2602	♦UNI	253 - 14
UES2603	♦UNI	253 -197
UES2604	♦UNI	254 - 39
UES2605	♦UNI	254 -122
UES2606	♦UNI	254 -167
UF1	♦SAKJ	239 -184
UF1A	♦SAKJ	240 - 35
UF1B	♦SAKJ	240 - 70
UF1C	♦SAKJ	240 -115
UF4001	♦GIC	280 - 10
UF4002	♦GIC	280 - 85
UF4003	♦GIC	280 -180
UF4004	♦GIC	281 - 84
UF5400	♦GIC	287 -195
UF5401	♦GIC	288 - 34
UF5402	♦GIC	288 -114
UF5403	♦GIC	288 -159
UF5404	♦GIC	288 -212
UF-01	♦SAKJ	274 -160
UF-2	♦SAKJ	241 - 96
UF-3	♦SAKJ	284 -159
UFB2.5	♦UNI	261 -181
UFB5	♦UNI	261 -189
UFB7.5	♦UNI	261 -197
UFS5	♦UNI	261 -190
UFS7.5	♦UNI	261 -198
UFS10	♦UNI	261 -203
UGB5	♦UNI	424 - 26
UGB7.5	♦UNI	425 -201
UGB10	♦UNI	427 -184
UGB3132AD	BBCG	361 -124
UGB6124ADa	BBCG	360 - 8
UGB6124AG	BBCG	372 - 81
UGD5	♦UNI	261 -191
UGD7.5	♦UNI	261 -199
UGD10	♦UNI	261 -204
UGE0221AY4	BBCG	423 - 43
UGE0421AY4	BBCG	420 - 71
UGE0501NY4B	BBCG	420 - 70
UGE1112AY4	BBCG	426 -109
UGE3126AY4	BBCG	431 - 70
UGF2.5	♦UNI	261 -182
UGF5	♦UNI	261 -192
UGF7.5	♦UNI	261 -200
UHV100	CSD	433 -134
UHV125	CSD	433 -188
UHV150	CSD	433 -196
UHV175	CSD	433 -200
UHV200	CSD	433 -205
UHV225	CSD	433 -206
UHV250	CSD	433 -208
UHV275	CSD	433 -209
UHV300	CSD	433 -210
UPI2069	UPI	278 - 53
UPI2069A	UPI	278 - 54
UPI2070	UPI	278 -134
UPI2070A	UPI	278 -135
UPI2071	UPI	278 -205
UPI2071A	UPI	278 -206
UR105	♦UNI	279 -220
UR110	♦UNI	280 - 60
UR115	♦UNI	280 -121
UR120	♦UNI	280 -148
UR125	♦UNI	281 - 2
UR205	♦UNI	285 -203
UR210	♦UNI	286 - 14
UR215	♦UNI	286 - 39
UR220	♦UNI	286 - 54
UR225	♦UNI	286 - 80
UR710	♦UNI	446 - 34
US12	♦UNI	406 - 48
US15	♦UNI	411 - 63
US18	♦UNI	413 -207
US20	♦UNI	415 - 37
US25	♦UNI	417 -140
US30	♦UNI	419 -117
US35	♦UNI	420 -189
US40	♦UNI	421 -191
US45A	♦UNI	422 -203
US50A	♦UNI	423 -141
US60A	♦UNI	424 -186
US70A	♦UNI	425 - 85
US80A	♦UNI	426 - 48
US100A	♦UNI	427 - 83
US120A	♦UNI	428 - 83
US150A	♦UNI	429 - 58
US180A	♦UNI	430 - 56
US200A	♦UNI	430 -145
USB2.5	♦UNI	417 -161
USB5	♦UNI	423 -170
USB7.5	♦UNI	425 -166
USB10	♦UNI	427 -107
USD245	♦UNI	374 - 92
USD320C	♦UNI	299 -189
USD335C	♦UNI	299 -199
USD345C	♦UNI	299 -215
USD420	UNI	301 - 79
USD435	UNI	301 - 85
USD445	UNI	301 - 89
USD520	♦UNI	304 -214
USD535	♦UNI	304 -217
USD545	♦UNI	304 -220
USD545HR2	♦UNI	305 - 1
USD550(M)	♦UNI	375 -107
USD620(M)	♦UNI	374 -123

TYPE No.	MFRS	Pg&Line
USD620C(M)	♦UNI	374 -153
USD635(M)	♦UNI	374 -124
USD635C(M)	♦UNI	374 -155
USD640(M)	♦UNI	374 -125
USD640C(M)	♦UNI	374 -157
USD645(M)	♦UNI	374 -126
USD645C(M)	♦UNI	374 -159
USD720(M)	♦UNI	374 -128
USD720C(M)	♦UNI	374 -191
USD735(M)	♦UNI	374 -129
USD735C(M)	♦UNI	374 -197
USD740(M)	♦UNI	374 -130
USD740C(M)	♦UNI	374 -203
USD745(M)	♦UNI	374 -137
USD745C(M)	♦UNI	374 -205
USD820	♦UNI	294 -170
USD835	♦UNI	294 -171
USD840	♦UNI	294 -172
USD845	♦UNI	294 -173
USD920	♦UNI	296 -176
USD935	♦UNI	296 -177
USD940	♦UNI	296 -179
USD945	♦UNI	296 -180
USD1120(M)	♦UNI	374 - 29
USD1130(M)	♦UNI	374 - 37
USD1140(M)	♦UNI	374 - 44
USM140C(MA)	♦UNI	375 -200
USM145C(MA)	♦UNI	375 -202
USM150C(MA)	♦UNI	375 -203
USM20040C(A)	♦UNI	376 - 3
USM20045C(A)	♦UNI	376 - 6
USM20050C(A)	♦UNI	376 - 11
USR12	♦UNI	247 -205
USR15	♦UNI	247 -209
USR20	♦UNI	247 -219
USR25	♦UNI	248 - 2
USR30	♦UNI	248 - 4
USR35	♦UNI	248 - 5
USR40A	♦UNI	248 - 8
USR45A	♦UNI	248 - 9
USR50A	♦UNI	248 - 12
USR60A	♦UNI	248 - 15
USR70A	♦UNI	248 - 16
USR80A	♦UNI	248 - 18
USR100A	♦UNI	248 - 21
USR120A	♦UNI	248 - 23
USR150A	♦UNI	248 - 26
USR180A	♦UNI	248 - 27
USR931	♦MSC	186 - 41
	♦SIEG	
USR932	♦MSC	186 - 42
	♦SIEG	
USR933	♦MSC	186 - 43
	♦SIEG	
USR934	♦MSC	186 - 44
	♦SIEG	
USR1171	♦MSC	189 - 4
	♦SIEG	
USR1172	♦MSC	189 - 5
	♦SIEG	
USR1173	♦MSC	189 - 6
	♦SIEG	
USR1174	♦MSC	189 - 7
	♦SIEG	
USS5	♦UNI	423 -166
USS7.5	♦UNI	425 -155
USS10	♦UNI	427 - 95
USS15	♦UNI	429 - 67
UT111	UNI	277 -205
UT112	UNI	278 - 15
UT113	UNI	278 - 55
UT114	UNI	278 -100
UT115	UNI	278 -136
UT117	UNI	278 -174
UT118	UNI	278 -207
UT119	UNI	279 - 39
UT120	UNI	401 -119
UT211	UNI	278 - 84
UT212	UNI	278 -101
UT213	UNI	278 -137
UT214	UNI	278 -175
UT215	UNI	278 -208
UT221	UNI	276 -150
UT234	♦UNI	280 -149
UT235	♦UNI	281 - 57
UT236	♦UNI	280 - 61
UT237	♦UNI	281 -140
UT238	♦UNI	281 -174
UT242	♦UNI	283 - 28
UT244	♦UNI	283 - 31
UT245	♦UNI	283 - 32
UT247	♦UNI	283 - 34
UT249	♦UNI	283 - 25
UT251	♦UNI	283 -133
UT252	♦UNI	283 -197
UT254	♦UNI	284 - 85
UT255	♦UNI	284 -148
UT257	♦UNI	284 -188
UT258	♦UNI	285 - 49
UT261	♦UNI	286 - 15
UT262	♦UNI	286 - 55
UT264	♦UNI	286 -105
UT265	♦UNI	286 -135
UT267	♦UNI	286 -154
UT268	♦UNI	286 -196
UT347	♦UNI	401 -172
UT361	♦UNI	282 - 46
UT362	♦UNI	283 - 37
UT363	♦UNI	402 - 31
UT364	♦UNI	402 - 51
UT2005	♦UNI	285 -204
UT2010	♦UNI	286 - 16
UT2020	♦UNI	286 - 56
UT2040	♦UNI	286 -106

Δ-Registered with JEDEC by this manufacturer

♦-Mfr's data sheet available in microfilm service

1. TYPE No. CROSS INDEX

IN TYPE NUMBER SEQUENCE

TYPE No.	MFRS	Pg&Line
UT2060	♦UNI	286 -155
UT3005	♦UNI	287 -173
UT3010	♦UNI	288 - 10
UT3020	♦UNI	288 - 81
UT3040	♦UNI	288 -179
UT3060	♦UNI	289 - 44
UT4005	♦UNI	290 - 21
UT4010	♦UNI	290 - 27
UT4020	♦UNI	290 - 39
UT4040	♦UNI	290 - 53
UT4060	♦UNI	290 - 66
UT5105	♦UNI	293 - 36
UT5110	♦UNI	293 - 37
UT5120	♦UNI	293 - 38
UT5140	♦UNI	293 - 39
UT5160	♦UNI	293 - 40
UT6105	♦UNI	293 -166
UT6110	♦UNI	293 -167
UT6120	♦UNI	293 -168
UT6140	♦UNI	293 -170
UT6160	♦UNI	293 -173
UT8105	♦UNI	294 -181
UT8110	♦UNI	294 -211
UT8120	♦UNI	295 - 25
UT8140	♦UNI	295 - 76
UT8160	♦UNI	295 -152
UTR01	♦UNI	246 - 11
UTR02	♦UNI	246 - 12
UTR10	♦UNI	247 - 76
UTR11	♦UNI	247 - 77
UTR12	♦UNI	247 - 78
UTR20	♦UNI	247 -124
UTR21	♦UNI	247 -125
UTR22	♦UNI	247 -126
UTR30	♦UNI	247 -149
UTR31	♦UNI	247 -150
UTR32	♦UNI	247 -151
UTR40	♦UNI	247 -158
UTR41	♦UNI	247 -159
UTR42	♦UNI	247 -160
UTR50	♦UNI	247 -173
UTR51	♦UNI	247 -174
UTR52	♦UNI	247 -175
UTR60	♦UNI	247 -185
UTR61	♦UNI	247 -186
UTR62	♦UNI	247 -187
UTR2305	♦UNI	257 -191
UTR2310	♦UNI	258 -120
UTR2320	♦UNI	259 -119
UTR2340	♦UNI	260 - 85
UTR2350	♦UNI	260 -134
UTR2360	♦UNI	261 - 18
UTR3305	♦UNI	246 - 13
UTR3310	♦UNI	247 - 79
UTR3320	♦UNI	247 -127
UTR3340	♦UNI	247 -157
UTR3350	♦UNI	247 -172
UTR3360	♦UNI	247 -188
UTR4305	♦UNI	246 - 14
UTR4310	♦UNI	247 - 80
UTR4320	♦UNI	247 -128
UTR4340	♦UNI	247 -164
UTR4350	♦UNI	247 -176
UTR4360	♦UNI	247 -189
UTR4405	♦UNI	257 -194
UTR4410	♦UNI	258 -127
UTR4420	♦UNI	259 -141
UTR4440	♦UNI	260 -105
UTR5405	♦UNI	257 -195
UTR5410	♦UNI	258 -128
UTR5420	♦UNI	259 -142
UTR5440	♦UNI	260 -106
UTR6405	♦UNI	257 -196
UTR6410	♦UNI	258 -129
UTR6420	♦UNI	259 -143
UTR6440	♦UNI	260 -107
UTX105	♦UNI	246 - 7
UTX110	♦UNI	247 - 70
UTX115	♦UNI	247 -108
UTX120	♦UNI	247 -120
UTX125	♦UNI	247 -145
UTX205	♦UNI	246 - 8
UTX210	♦UNI	247 - 71
UTX215	♦UNI	247 -109
UTX220	♦UNI	247 -121
UTX225	♦UNI	247 -146
UTX3105	♦UNI	257 -155
UTX3110	♦UNI	258 - 66
UTX3115	♦UNI	258 -206
UTX3120	♦UNI	259 - 62
UTX4105	♦UNI	257 -156
UTX4110	♦UNI	258 - 67
UTX4115	♦UNI	258 -207
UTX4120	♦UNI	259 - 63
UZ110	♦UNI	220 -194
UZ111	♦UNI	221 -151
UZ112	♦UNI	222 -107
UZ113	♦UNI	223 - 58
UZ114	♦UNI	223 -126
UZ115	♦UNI	224 - 91
UZ116	♦UNI	225 - 29
UZ117	♦UNI	225 - 92
UZ118	♦UNI	226 - 51
UZ119	♦UNI	226 -105
UZ120	♦UNI	227 - 46
UZ122	♦UNI	227 - 76
UZ124	♦UNI	227 - 85
UZ126	♦UNI	227 - 95
UZ128	♦UNI	227 -114
UZ130	♦UNI	227 -125
UZ132	♦UNI	227 -133
UZ134	♦UNI	227 -151
UZ136	♦UNI	227 -160
UZ138	♦UNI	227 -167

TYPE No.	MFRS	Pg&Line
UZ140	♦UNI	227 -190
UZ210	♦UNI	221 - 2
UZ211	♦UNI	221 -156
UZ212	♦UNI	222 -113
UZ213	♦UNI	223 - 63
UZ214	♦UNI	223 -131
UZ215	♦UNI	224 - 96
UZ216	♦UNI	225 - 34
UZ217	♦UNI	225 - 95
UZ218	♦UNI	226 - 57
UZ219	♦UNI	226 -108
UZ220	♦UNI	227 - 52
UZ222	♦UNI	227 - 79
UZ224	♦UNI	227 - 87
UZ226	♦UNI	227 - 97
UZ228	♦UNI	227 -116
UZ230	♦UNI	227 -128
UZ232	♦UNI	227 -135
UZ234	♦UNI	227 -153
UZ236	♦UNI	227 -162
UZ238	♦UNI	227 -169
UZ240	♦UNI	227 -192
UZ310	♦UNI	221 - 6
UZ311	♦UNI	221 -160
UZ312	♦UNI	222 -117
UZ313	♦UNI	223 - 67
UZ314	♦UNI	223 -135
UZ315	♦UNI	224 -100
UZ316	♦UNI	225 - 38
UZ317	♦UNI	225 - 98
UZ318	♦UNI	226 - 61
UZ319	♦UNI	226 -111
UZ320	♦UNI	227 - 56
UZ322	♦UNI	227 - 81
UZ324	♦UNI	227 - 89
UZ326	♦UNI	227 - 99
UZ328	♦UNI	227 -118
UZ330	♦UNI	227 -130
UZ332	♦UNI	227 -137
UZ334	♦UNI	227 -155
UZ336	♦UNI	227 -164
UZ338	♦UNI	227 -171
UZ340	♦UNI	227 -194
UZ706	♦UNI	178 -190
UZ707	♦UNI	180 -184
UZ708	♦UNI	182 -174
UZ709	♦UNI	186 - 5
UZ710	♦UNI	188 - 74
UZ712	♦UNI	191 -162
UZ713	♦UNI	193 -102
UZ714	♦UNI	194 - 41
UZ715	♦UNI	195 -158
UZ716	♦UNI	197 - 36
UZ718	♦UNI	199 - 57
UZ720	♦UNI	201 - 50
UZ722	♦UNI	202 -155
UZ724	♦UNI	204 - 43
UZ727	♦UNI	205 -198
UZ730	♦UNI	207 -123
UZ733	♦UNI	209 - 9
UZ736	♦UNI	210 - 63
UZ740	♦UNI	211 -129
UZ745	♦UNI	212 -141
UZ750	♦UNI	213 -163
UZ756	♦UNI	215 -111
UZ760	♦UNI	215 -158
UZ770	♦UNI	217 -118
UZ775	♦UNI	218 - 79
UZ780	♦UNI	218 -107
UZ790	♦UNI	219 - 98
UZ806	♦UNI	178 -195
UZ807	♦UNI	180 -189
UZ808	♦UNI	182 -179
UZ809	♦UNI	186 - 10
UZ810	♦UNI	188 - 79
UZ812	♦UNI	191 -167
UZ813	♦UNI	193 -107
UZ814	♦UNI	194 - 46
UZ815	♦UNI	195 -163
UZ816	♦UNI	197 - 39
UZ818	♦UNI	199 - 63
UZ820	♦UNI	201 - 56
UZ822	♦UNI	202 -160
UZ824	♦UNI	204 - 48
UZ827	♦UNI	205 -204
UZ830	♦UNI	207 -128
UZ833	♦UNI	209 - 15
UZ836	♦UNI	210 - 69
UZ840	♦UNI	211 -131
UZ845	♦UNI	212 -145
UZ850	♦UNI	213 -168
UZ856	♦UNI	215 -116
UZ860	♦UNI	215 -160
UZ870	♦UNI	217 -120
UZ875	♦UNI	218 - 84
UZ880	♦UNI	218 -109
UZ890	♦UNI	219 -101
UZ906	♦UNI	178 -199
UZ907	♦UNI	180 -193
UZ908	♦UNI	182 -183
UZ909	♦UNI	186 - 14
UZ910	♦UNI	188 - 83
UZ912	♦UNI	191 -171
UZ913	♦UNI	193 -111
UZ914	♦UNI	194 - 50
UZ915	♦UNI	195 -167
UZ916	♦UNI	197 - 42
UZ918	♦UNI	199 - 67
UZ920	♦UNI	201 - 60
UZ922	♦UNI	202 -164
UZ924	♦UNI	204 - 52
UZ927	♦UNI	206 - 2
UZ930	♦UNI	207 -132
UZ933	♦UNI	209 - 19

TYPE No.	MFRS	Pg&Line
UZ936	♦UNI	210 - 73
UZ940	♦UNI	211 -133
UZ945	♦UNI	212 -148
UZ950	♦UNI	213 -171
UZ956	♦UNI	215 -120
UZ960	♦UNI	215 -162
UZ970	♦UNI	217 -122
UZ975	♦UNI	218 - 88
UZ980	♦UNI	218 -111
UZ990	♦UNI	219 -103
UZ4110	♦UNI	395 -125
UZ4111	♦UNI	396 - 58
UZ4112	♦UNI	396 -144
UZ4113	♦UNI	397 - 33
UZ4115	♦UNI	397 -170
UZ4116	♦UNI	398 - 60
UZ4118	♦UNI	398 -173
UZ4120	♦UNI	399 - 87
UZ4210	♦UNI	395 -135
UZ4211	♦UNI	396 - 63
UZ4212	♦UNI	396 -150
UZ4213	♦UNI	397 - 39
UZ4215	♦UNI	397 -176
UZ4216	♦UNI	398 - 66
UZ4218	♦UNI	398 -179
UZ4220	♦UNI	399 - 88
UZ4706	♦UNI	379 - 20
UZ4707	♦UNI	379 -133
UZ4708	♦UNI	380 - 54
UZ4709	♦UNI	380 -182
UZ4710	♦UNI	381 - 81
UZ4712	♦UNI	382 - 89
UZ4713	♦UNI	383 - 5
UZ4715	♦UNI	383 -169
UZ4716	♦UNI	384 - 80
UZ4718	♦UNI	385 - 35
UZ4720	♦UNI	385 -189
UZ4722	♦UNI	386 - 93
UZ4724	♦UNI	387 - 10
UZ4727	♦UNI	387 -148
UZ4730	♦UNI	388 - 68
UZ4733	♦UNI	388 -173
UZ4736	♦UNI	389 - 87
UZ4739	♦UNI	389 -188
UZ4743	♦UNI	390 - 99
UZ4747	♦UNI	391 - 31
UZ4751	♦UNI	391 -169
UZ4756	♦UNI	392 - 79
UZ4762	♦UNI	393 - 4
UZ4768	♦UNI	393 - 93
UZ4775	♦UNI	394 - 8
UZ4782	♦UNI	394 -121
UZ4791	♦UNI	395 - 32
UZ4806	♦UNI	379 - 28
UZ4807	♦UNI	379 -142
UZ4808	♦UNI	380 - 64
UZ4809	♦UNI	380 -192
UZ4810	♦UNI	381 - 90
UZ4812	♦UNI	382 - 99
UZ4813	♦UNI	383 - 14
UZ4815	♦UNI	383 -179
UZ4816	♦UNI	384 - 88
UZ4818	♦UNI	385 - 45
UZ4820	♦UNI	385 -199
UZ4822	♦UNI	386 -102
UZ4824	♦UNI	387 - 20
UZ4827	♦UNI	387 -158
UZ4830	♦UNI	388 - 78
UZ4833	♦UNI	388 -183
UZ4836	♦UNI	389 - 97
UZ4839	♦UNI	389 -194
UZ4843	♦UNI	390 -106
UZ4847	♦UNI	391 - 38
UZ4851	♦UNI	391 -176
UZ4856	♦UNI	392 - 88
UZ4862	♦UNI	393 - 10
UZ4868	♦UNI	393 -100
UZ4875	♦UNI	394 - 17
UZ4882	♦UNI	394 -128
UZ4891	♦UNI	395 - 39
UZ5110	♦UNI	395 -126
UZ5111	♦UNI	396 - 59
UZ5112	♦UNI	396 -145
UZ5113	♦UNI	397 - 34
UZ5114	♦UNI	397 -117
UZ5115	♦UNI	397 -171
UZ5116	♦UNI	398 - 61
UZ5117	♦UNI	398 -129
UZ5118	♦UNI	398 -174
UZ5119	♦UNI	399 - 54
UZ5120	♦UNI	399 - 82
UZ5122	♦UNI	399 -148
UZ5124	♦UNI	399 -158
UZ5126	♦UNI	399 -167
UZ5128	♦UNI	399 -178
UZ5130	♦UNI	399 -186
UZ5132	♦UNI	399 -194
UZ5134	♦UNI	400 - 6
UZ5136	♦UNI	400 - 13
UZ5138	♦UNI	400 - 20
UZ5140	♦UNI	400 - 29
UZ5210	♦UNI	395 -136
UZ5211	♦UNI	396 - 64
UZ5212	♦UNI	396 -151
UZ5213	♦UNI	397 - 40
UZ5214	♦UNI	397 -122
UZ5215	♦UNI	397 -177
UZ5216	♦UNI	398 - 67
UZ5217	♦UNI	398 -132
UZ5218	♦UNI	398 -180
UZ5219	♦UNI	399 - 57
UZ5220	♦UNI	399 - 89
UZ5222	♦UNI	399 -151
UZ5224	♦UNI	399 -160

TYPE No.	MFRS	Pg&Line
UZ5226	♦UNI	399 -169
UZ5228	♦UNI	399 -180
UZ5230	♦UNI	399 -189
UZ5232	♦UNI	399 -196
UZ5234	♦UNI	400 - 8
UZ5236	♦UNI	400 - 15
UZ5238	♦UNI	400 - 22
UZ5240	♦UNI	400 - 31
UZ5310	♦UNI	395 -142
UZ5311	♦UNI	396 - 69
UZ5312	♦UNI	396 -156
UZ5313	♦UNI	397 - 45
UZ5314	♦UNI	397 -126
UZ5315	♦UNI	397 -182
UZ5316	♦UNI	398 - 71
UZ5317	♦UNI	398 -135
UZ5318	♦UNI	398 -185
UZ5319	♦UNI	399 - 60
UZ5320	♦UNI	399 - 93
UZ5322	♦UNI	399 -153
UZ5324	♦UNI	399 -162
UZ5326	♦UNI	399 -171
UZ5328	♦UNI	399 -182
UZ5330	♦UNI	399 -191
UZ5332	♦UNI	400 - 1
UZ5334	♦UNI	400 - 10
UZ5336	♦UNI	400 - 17
UZ5338	♦UNI	400 - 24
UZ5340	♦UNI	400 - 33
UZ5706	♦UNI	379 - 21
UZ5707	♦UNI	379 -134
UZ5708	♦UNI	380 - 55
UZ5709	♦UNI	380 -183
UZ5710	♦UNI	381 - 82
UZ5712	♦UNI	382 - 90
UZ5713	♦UNI	383 - 6
UZ5714	♦UNI	383 -101
UZ5715	♦UNI	383 -170
UZ5716	♦UNI	384 - 81
UZ5718	♦UNI	385 - 36
UZ5720	♦UNI	385 -190
UZ5722	♦UNI	386 - 94
UZ5724	♦UNI	387 - 11
UZ5727	♦UNI	387 -149
UZ5730	♦UNI	388 - 69
UZ5733	♦UNI	388 -174
UZ5736	♦UNI	389 - 88
UZ5740	♦UNI	390 - 68
UZ5745	♦UNI	390 -179
UZ5750	♦UNI	391 -118
UZ5756	♦UNI	392 - 80
UZ5760	♦UNI	392 -169
UZ5770	♦UNI	393 -171
UZ5775	♦UNI	394 - 9
UZ5780	♦UNI	394 - 94
UZ5790	♦UNI	395 - 6
UZ5806	♦UNI	379 - 29
UZ5807	♦UNI	379 -143
UZ5808	♦UNI	380 - 65
UZ5809	♦UNI	380 -193
UZ5810	♦UNI	381 - 91
UZ5812	♦UNI	382 -100
UZ5813	♦UNI	383 - 15
UZ5814	♦UNI	383 -107
UZ5815	♦UNI	383 -180
UZ5816	♦UNI	384 - 89
UZ5828	♦UNI	385 - 46
UZ5820	♦UNI	385 -200
UZ5822	♦UNI	386 -103
UZ5824	♦UNI	387 - 21
UZ5827	♦UNI	387 -159
UZ5830	♦UNI	388 - 79
UZ5833	♦UNI	388 -184
UZ5836	♦UNI	389 - 98
UZ5840	♦UNI	390 - 72
UZ5845	♦UNI	390 -185
UZ5850	♦UNI	391 -123
UZ5856	♦UNI	392 - 89
UZ5860	♦UNI	392 -174
UZ5870	♦UNI	393 -174
UZ5875	♦UNI	394 - 18
UZ5880	♦UNI	394 - 97
UZ5890	♦UNI	395 - 9
UZ5906	♦UNI	379 - 33
UZ5907	♦UNI	379 -147
UZ5908	♦UNI	380 - 70
UZ5909	♦UNI	380 -197
UZ5910	♦UNI	381 - 95
UZ5912	♦UNI	382 -104
UZ5913	♦UNI	383 - 20
UZ5914	♦UNI	383 -111
UZ5915	♦UNI	383 -185
UZ5916	♦UNI	384 - 93
UZ5918	♦UNI	385 - 51
UZ5920	♦UNI	386 - 4
UZ5922	♦UNI	386 -109
UZ5924	♦UNI	387 - 26
UZ5927	♦UNI	387 -165
UZ5930	♦UNI	388 - 84
UZ5933	♦UNI	388 -190
UZ5936	♦UNI	389 -103
UZ5940	♦UNI	390 - 74
UZ5945	♦UNI	390 -188
UZ5950	♦UNI	391 -126
UZ5956	♦UNI	392 - 95
UZ5960	♦UNI	392 -177
UZ5970	♦UNI	393 -176
UZ5975	♦UNI	394 - 23
UZ5980	♦UNI	394 - 99
UZ5990	♦UNI	395 - 11
UZ7110	♦UNI	395 -165
UZ7110L	♦UNI	395 -143
UZ7210	♦UNI	395 -181
UZ7210L	♦UNI	395 -144

TYPE No.	MFRS	Pg&Line
UZ7310	♦UNI	395 -188
UZ7310L	♦UNI	395 -145
UZ7706	♦UNI	379 - 52
UZ7706L	♦UNI	379 - 34
UZ7707	♦UNI	379 -184
UZ7707L	♦UNI	379 -148
UZ7708	♦UNI	380 - 92
UZ7708L	♦UNI	380 - 71
UZ7709	♦UNI	381 - 14
UZ7709L	♦UNI	380 -198
UZ7710	♦UNI	381 -120
UZ7710L	♦UNI	381 - 96
UZ7712	♦UNI	382 -129
UZ7712L	♦UNI	382 -105
UZ7713	♦UNI	383 - 38
UZ7713L	♦UNI	383 - 21
UZ7714	♦UNI	383 -123
UZ7714L	♦UNI	383 -112
UZ7715	♦UNI	384 - 13
UZ7715L	♦UNI	383 -186
UZ7716	♦UNI	384 -112
UZ7716L	♦UNI	384 - 94
UZ7718	♦UNI	385 - 75
UZ7718L	♦UNI	385 - 52
UZ7720	♦UNI	386 - 25
UZ7720L	♦UNI	386 - 5
UZ7722	♦UNI	386 -130
UZ7722L	♦UNI	386 -110
UZ7724	♦UNI	387 - 47
UZ7724L	♦UNI	387 - 27
UZ7727	♦UNI	387 -189
UZ7727L	♦UNI	387 -166
UZ7730	♦UNI	388 -106
UZ7730L	♦UNI	388 - 85
UZ7733	♦UNI	389 - 13
UZ7733L	♦UNI	388 -191
UZ7736	♦UNI	389 -123
UZ7736L	♦UNI	389 -104
UZ7740	♦UNI	390 - 80
UZ7740L	♦UNI	390 - 75
UZ7745	♦UNI	390 -196
UZ7745L	♦UNI	390 -189
UZ7750	♦UNI	391 -133
UZ7750L	♦UNI	391 -127
UZ7756	♦UNI	392 -114
UZ7756L	♦UNI	392 - 96
UZ7760	♦UNI	392 -186
UZ7760L	♦UNI	392 -178
UZ7770	♦UNI	393 -180
UZ7770L	♦UNI	393 -177
UZ7775	♦UNI	394 - 42
UZ7775L	♦UNI	394 - 24
UZ7780	♦UNI	394 -103
UZ7780L	♦UNI	394 -100
UZ7790	♦UNI	395 - 15
UZ7790L	♦UNI	395 - 12
UZ7806	♦UNI	379 - 64
UZ7806L	♦UNI	379 - 35
UZ7807	♦UNI	379 -195
UZ7807L	♦UNI	379 -149
UZ7808	♦UNI	380 -104
UZ7808L	♦UNI	380 - 72
UZ7809	♦UNI	381 - 25
UZ7809L	♦UNI	380 -199
UZ7810	♦UNI	381 -135
UZ7810L	♦UNI	381 - 97
UZ7812	♦UNI	382 -145
UZ7812L	♦UNI	382 -106
UZ7813	♦UNI	383 - 52
UZ7813L	♦UNI	383 - 22
UZ7814	♦UNI	383 -130
UZ7814L	♦UNI	383 -113
UZ7815	♦UNI	384 - 30
UZ7815L	♦UNI	383 -187
UZ7816	♦UNI	384 -127
UZ7816L	♦UNI	384 - 95
UZ7818	♦UNI	385 - 93
UZ7818L	♦UNI	385 - 53
UZ7820	♦UNI	386 - 40
UZ7820L	♦UNI	386 - 6
UZ7822	♦UNI	386 -147
UZ7822L	♦UNI	386 -111
UZ7824	♦UNI	387 - 62
UZ7824L	♦UNI	387 - 28
UZ7827	♦UNI	388 - 4
UZ7827L	♦UNI	387 -167
UZ7830	♦UNI	388 -120
UZ7830L	♦UNI	388 - 86
UZ7833	♦UNI	389 - 29
UZ7833L	♦UNI	388 -192
UZ7836	♦UNI	389 -138
UZ7836L	♦UNI	389 -105
UZ7840	♦UNI	390 - 81
UZ7840L	♦UNI	390 - 76
UZ7845	♦UNI	391 - 1
UZ7845L	♦UNI	390 -190
UZ7850	♦UNI	391 -138
UZ7850L	♦UNI	391 -128
UZ7856	♦UNI	392 -130
UZ7856L	♦UNI	392 - 97
UZ7860	♦UNI	392 -187
UZ7860L	♦UNI	392 -179
UZ7870	♦UNI	393 -181
UZ7870L	♦UNI	393 -178
UZ7875	♦UNI	394 - 57
UZ7875L	♦UNI	394 - 25
UZ7880	♦UNI	394 -104
UZ7880L	♦UNI	394 -101
UZ7890	♦UNI	395 - 17
UZ7890L	♦UNI	395 - 13
UZ7906	♦UNI	379 - 71
UZ7906L	♦UNI	379 - 36
UZ7907	♦UNI	379 -201
UZ7907L	♦UNI	379 -150

Δ-Registered with JEDEC by this manufacturer

♦-Mfr's data sheet available in microfilm service

1. TYPE No. CROSS INDEX

IN TYPE NUMBER SEQUENCE

TYPE No.	MFRS	Pg&Line
UZ7908	♦UNI	380 -111
UZ7908L	♦UNI	380 - 73
UZ7909	♦UNI	381 - 32
UZ7909L	♦UNI	380 -200
UZ7910	♦UNI	381 -143
UZ7910L	♦UNI	381 - 98
UZ7912	♦UNI	382 -153
UZ7912L	♦UNI	382 -107
UZ7913	♦UNI	383 - 60
UZ7913L	♦UNI	383 - 23
UZ7914	♦UNI	383 -136
UZ7914L	♦UNI	383 -114
UZ7915	♦UNI	384 - 38
UZ7915L	♦UNI	383 -188
UZ7916	♦UNI	384 -135
UZ7916L	♦UNI	384 - 96
UZ7918	♦UNI	385 -101
UZ7918L	♦UNI	385 - 54
UZ7920	♦UNI	386 - 48
UZ7920L	♦UNI	386 - 7
UZ7922	♦UNI	386 -155
UZ7922L	♦UNI	386 -112
UZ7924	♦UNI	387 - 70
UZ7924L	♦UNI	387 - 29
UZ7927	♦UNI	388 - 12
UZ7927L	♦UNI	387 -168
UZ7930	♦UNI	388 -128
UZ7930L	♦UNI	388 - 87
UZ7933	♦UNI	389 - 37
UZ7933L	♦UNI	388 -193
UZ7936	♦UNI	389 -146
UZ7936L	♦UNI	389 -106
UZ7940	♦UNI	390 - 82
UZ7940L	♦UNI	390 - 77
UZ7945	♦UNI	391 - 4
UZ7945L	♦UNI	390 -191
UZ7950	♦UNI	391 -143
UZ7950L	♦UNI	391 -129
UZ7956L	♦UNI	392 - 98
UZ7960	♦UNI	392 -188
UZ7960L	♦UNI	392 -180
UZ7970	♦UNI	393 -182
UZ7970L	♦UNI	393 -179
UZ7975	♦UNI	394 - 65
UZ7975L	♦UNI	394 - 26
UZ7980	♦UNI	394 -105
UZ7980L	♦UNI	394 -102
UZ7990	♦UNI	395 - 18
UZ7990L	♦UNI	395 - 14
UZ8110	♦UNI	220 -118
UZ8111	♦UNI	221 - 81
UZ8112	♦UNI	222 - 31
UZ8113	♦UNI	222 -176
UZ8114	♦UNI	223 - 98
UZ8115	♦UNI	224 - 20
UZ8116	♦UNI	224 -152
UZ8117	♦UNI	225 - 67
UZ8118	♦UNI	225 -158
UZ8119	♦UNI	226 - 83
UZ8120	♦UNI	226 -162
UZ8210	♦UNI	220 -135
UZ8211	♦UNI	221 - 97
UZ8212	♦UNI	222 - 48
UZ8213	♦UNI	223 - 3
UZ8214	♦UNI	223 -103
UZ8215	♦UNI	224 - 36
UZ8216	♦UNI	224 -166
UZ8217	♦UNI	225 - 72
UZ8218	♦UNI	225 -175
UZ8219	♦UNI	226 - 86
UZ8220	♦UNI	226 -177
UZ8706	♦UNI	178 -118
UZ8707	♦UNI	180 -111
UZ8708	♦UNI	182 - 95
UZ8709	♦UNI	185 -128
UZ8710	♦UNI	187 -189
UZ8712	♦UNI	191 - 70
UZ8713	♦UNI	193 - 18
UZ8714	♦UNI	194 - 11
UZ8715	♦UNI	195 - 68
UZ8716	♦UNI	196 -161
UZ8718	♦UNI	198 -177
UZ8720	♦UNI	200 -167
UZ8722	♦UNI	202 - 68
UZ8724	♦UNI	203 -166
UZ8727	♦UNI	205 -104
UZ8730	♦UNI	207 - 29
UZ8733	♦UNI	208 -123
UZ8736	♦UNI	209 -187
UZ8740	♦UNI	211 -124
UZ8745	♦UNI	212 -130
UZ8750	♦UNI	213 -153
UZ8756	♦UNI	215 - 30
UZ8760	♦UNI	215 -153
UZ8770	♦UNI	217 -114
UZ8775	♦UNI	217 -199
UZ8780	♦UNI	218 -101
UZ8790	♦UNI	219 - 91
UZ8806	♦UNI	178 -138
UZ8807	♦UNI	180 -130
UZ8808	♦UNI	182 -119
UZ8809	♦UNI	185 -147
UZ8810	♦UNI	188 - 6
UZ8812	♦UNI	191 - 95
UZ8813	♦UNI	193 - 39
UZ8814	♦UNI	194 - 17
UZ8815	♦UNI	195 - 94
UZ8816	♦UNI	196 -183
UZ8818	♦UNI	198 -202
UZ8820	♦UNI	200 -192
UZ8822	♦UNI	202 - 92
UZ8824	♦UNI	203 -187
UZ8827	♦UNI	205 -130
UZ8830	♦UNI	207 - 54

TYPE No.	MFRS	Pg&Line
UZ8833	♦UNI	208 -147
UZ8836	♦UNI	209 -203
UZ8840	♦UNI	211 -125
UZ8845	♦UNI	212 -132
UZ8850	♦UNI	213 -155
UZ8856	♦UNI	215 - 47
UZ8860	♦UNI	215 -154
UZ8870	♦UNI	217 -115
UZ8875	♦UNI	218 - 15
UZ8880	♦UNI	218 -103
UZ8890	♦UNI	219 - 93
V03C	♦HITJ	283 - 43
V03E	♦HITJ	283 - 48
V03G	♦HITJ	283 - 56
V03J	♦HITJ	402 - 34
V06B	HITJ	282 -115
V06C	♦HITJ	282 -123
V06E	♦HITJ	282 -133
V06G	♦HITJ	282 -145
V06J	♦HITJ	402 - 15
V07E	♦HITJ	283 - 47
V07G	♦HITJ	283 - 51
V07J	♦HITJ	283 - 57
V08E	♦HITJ	282 -128
V08G	♦HITJ	282 -139
V08J	♦HITJ	282 -146
V8CH8(A)	♦GESY	330 - 8
V8CP22(A)	♦GESY	330 - 9
V8SC1812(A)	♦GESY	359 - 32
V8SM8(A)	♦GESY	330 - 10
V8ZA1	♦GESY	443 - 20
V8ZA2	♦GESY	443 - 21
V8ZA05	♦GESY	437 - 60
V09C	♦HITJ	241 - 79
V09E	♦HITJ	241 - 89
V09G	♦HITJ	241 - 98
V11J	♦HITJ	241 -105
V11L	♦HITJ	241 -123
V11M	♦HITJ	241 -130
V11N	♦HITJ	241 -140
V12CH8(A)	♦GESY	330 - 11
V12SC1812(A)	♦GESY	359 - 33
V12SM8(A)	♦GESY	330 - 12
V12ZA1	♦GESY	443 - 22
V12ZA2	♦GESY	443 - 23
V12ZA05	♦GESY	437 - 61
V17A	♦HITJ	444 - 78
V17B	♦HITJ	444 - 79
V17C	♦HITJ	444 - 80
V17D	♦HITJ	444 - 81
V17E	♦HITJ	444 - 82
V18CH8(A)	♦GESY	330 - 13
V18MA1B	♦GESY	437 - 62
V18SC1812(A)	♦GESY	359 - 34
V18SM8(A)	♦GESY	330 - 14
V18SM16(A)	♦GESY	330 - 15
V18Z-1	VEC	441 - 37
V18Z-3	VEC	441 - 38
V18ZA2	♦GESY	443 - 24
V18ZA05	♦GESY	437 - 63
V18ZA40	♦GESY	437 - 64
V19B	♦HITJ	241 - 70
V19C	♦HITJ	241 - 75
V19E	♦HITJ	241 - 85
V19G	♦HITJ	241 - 93
V22CH8(A)	♦GESY	330 - 16
V22MA1B	♦GESY	437 - 65
V22SC1812(A)	♦GESY	359 - 35
V22SM8(A)	♦GESY	330 - 17
V22SM16(A)	♦GESY	330 - 18
V22Z-1	VEC	441 - 39
V22Z-3	VEC	441 - 40
V22ZA2	♦GESY	437 - 66
V22ZA05	♦GESY	437 - 67
V24Z-1	VEC	441 - 41
V24Z-4	VEC	441 - 42
V24ZA50	♦GESY	437 - 68
V27A-1	VEC	441 - 43
V27CH8(A)	♦GESY	330 - 19
V27SC1812(A)	♦GESY	359 - 36
V27SM8(A)	♦GESY	330 - 20
V27SM16(A)	♦GESY	330 - 21
V27Z-1	VEC	441 - 44
V27Z-4	VEC	441 - 45
V27ZA05	♦GESY	437 - 69
V27ZA60	♦GESY	437 - 70
V30J	♦HITJ	276 -114
V30L	♦HITJ	401 - 82
V30M	♦HITJ	408 -176
V30N	♦HITJ	411 - 35
V31J	♦HITJ	241 -106
V31L	♦HITJ	241 -124
V31M	♦HITJ	241 -131
V31N	♦HITJ	241 -141
V33A-2	VEC	441 - 46
V33CH8(A)	♦GESY	330 - 22
V33MA1A	♦GESY	437 - 71
V33MA1B	♦GESY	437 - 72
V33SC1812(A)	♦GESY	359 - 37
V33SM8(A)	♦GESY	330 - 23
V33SM16(A)	♦GESY	330 - 24
V33Z-1	VEC	441 - 47
V33Z-5	VEC	441 - 48
V33ZA05	♦GESY	437 - 73
V33ZA70	♦GESY	437 - 74
V36ZA80	♦GESY	437 - 75
V39A-2	VEC	441 - 49
V39CH8(A)	♦GESY	330 - 25
V39CP20(A)	♦GESY	330 - 26
V39MA2A	♦GESY	437 - 76
V39MA2B	♦GESY	437 - 77
V39SC1812(A)	♦GESY	359 - 38
V39SM8(A)	♦GESY	330 - 27
V39SM16(A)	♦GESY	330 - 28

TYPE No.	MFRS	Pg&Line
V39Z-2	VEC	441 - 50
V39Z-6	VEC	441 - 51
V39ZA05	♦GESY	437 - 78
V47A-3	VEC	441 - 52
V47CH8(A)	♦GESY	330 - 29
V47CP20(A)	♦GESY	330 - 30
V47MA2A	♦GESY	437 - 79
V47MA2B	♦GESY	437 - 80
V47SC1812(A)	♦GESY	359 - 39
V47SM8(A)	♦GESY	330 - 31
V47SM16(A)	♦GESY	330 - 32
V47Z-2	VEC	441 - 53
V47Z-7	VEC	441 - 54
V47ZA1(A)	♦GESY	443 - 25
V47ZA3(A)	♦GESY	359 - 40
V47ZA05	♦GESY	437 - 81
V47ZA7(A)	♦GESY	443 - 26
V56A-3	VEC	441 - 55
V56CH8(A)	♦GESY	330 - 33
V56MA2A	♦GESY	437 - 82
V56MA2B	♦GESY	437 - 83
V56SM8(A)	♦GESY	330 - 34
V56SM16(A)	♦GESY	330 - 35
V56Z-2	VEC	441 - 56
V56Z-8	VEC	441 - 57
V56ZA2	♦GESY	443 - 27
V56ZA3(A)	♦GESY	359 - 41
V56ZA05	♦GESY	437 - 84
V56ZA8	♦GESY	443 - 28
V64	SCH	442 - 89
V68A-3	VEC	441 - 58
V68CH8(A)	♦GESY	330 - 36
V68MA3A	♦GESY	437 - 85
V68MA3B	♦GESY	443 - 29
V68SM8(A)	♦GESY	330 - 37
V68SM16(A)	♦GESY	330 - 38
V68Z-2	VEC	441 - 59
V68Z-10	VEC	441 - 60
V68ZA2	♦GESY	443 - 30
V68ZA3(A)	♦GESY	359 - 42
V68ZA05	♦GESY	437 - 86
V68ZA10	♦GESY	443 - 31
V72	SCH	435 - 54
V82A-5	VEC	441 - 61
V82CH8(A)	♦GESY	330 - 39
V82MA3A	♦GESY	443 - 32
V82MA3B	♦GESY	443 - 33
V82SM8(A)	♦GESY	330 - 40
V82SM16(A)	♦GESY	330 - 41
V82Z-2	VEC	441 - 62
V82Z-12	VEC	441 - 63
V82ZA2	♦GESY	443 - 34
V82ZA4(A)	♦GESY	359 - 43
V82ZA05	♦GESY	437 - 87
V82ZA12	♦GESY	443 - 35
V100A-2	VEC	441 - 64
V100CH8(A)	♦GESY	330 - 42
V100MA4A	♦GESY	443 - 36
V100MA4B	♦GESY	443 - 37
V100SM8(A)	♦GESY	330 - 43
V100SM16(A)	♦GESY	330 - 44
V100Z-3	VEC	441 - 65
V100Z-15	VEC	441 - 66
V100ZA3	♦GESY	443 - 38
V100ZA4(A)	♦GESY	359 - 44
V100ZA05	♦GESY	437 - 88
V100ZA15	♦GESY	443 - 39
V112BA60	♦GESY	437 - 89
V112BB60(A)	♦GESY	359 - 45
V117R-2	VEC	441 - 67
V117R-5	VEC	441 - 68
V117R-6	VEC	441 - 69
V117R-15	VEC	441 - 70
V120A-2	VEC	441 - 71
V120CH8(A)	♦GESY	330 - 45
V120MA1A	♦GESY	443 - 40
V120MA2B	♦GESY	443 - 41
V120SM8(A)	♦GESY	330 - 46
V120SM16(A)	♦GESY	330 - 47
V120Z-3	VEC	441 - 72
V120ZA1	♦GESY	443 - 42
V120ZA4(A)	♦GESY	359 - 46
V120ZA05	♦GESY	437 - 90
V120ZA6	♦GESY	443 - 43
V130HE150	♦GESY	437 - 91
V130LA1	♦GESY	443 - 44
V130LA2	♦GESY	443 - 45
V130LA5	♦GESY	437 - 92
V130LA10A	♦GESY	443 - 46
V130LA20A	♦GESY	443 - 47
V130LA20B	♦GESY	443 - 48
V130PA10A	GESY	443 - 49
V130PA20A	♦GESY	443 - 50
V130PA20B	GESY	443 - 51
V130PA20C(A)	♦GESY	443 - 52
V131BA60(A)	♦GESY	359 - 47
V131DA40	♦GESY	437 - 93
V131DB40(A)	♦GESY	359 - 48
V140LA2	♦GESY	437 - 94
V140LA5	♦GESY	437 - 95
V140LA10A	♦GESY	437 - 96
V142BB60	♦GESY	437 - 97
V150A-3	VEC	441 - 74
V150CH8(A)	♦GESY	330 - 48
V150HE150	♦GESY	437 - 98
V150LA1	♦GESY	443 - 53
V150LA2	♦GESY	443 - 54
V150LA5	♦GESY	437 - 99
V150LA10A	♦GESY	443 - 55
V150LA20A	♦GESY	443 - 56
V150LA20B	♦GESY	443 - 57
V150MA1A	♦GESY	443 - 58
V150MA2B	♦GESY	443 - 59

TYPE No.	MFRS	Pg&Line
V150PA10A	GESY	443 - 60
V150PA20A	♦GESY	443 - 61
V150PA20C	♦GESY	443 - 62
V150R-2	VEC	441 - 75
V150R-6	VEC	441 - 76
V150R-8	VEC	441 - 77
V150R-17	VEC	441 - 78
V150SM8(A)	♦GESY	330 - 49
V150SM16(A)	♦GESY	330 - 50
V150ZA1	♦GESY	443 - 63
V150ZA4(A)	♦GESY	359 - 49
V150ZA05	♦GESY	437 -100
V150ZA8	♦GESY	443 - 64
V151BA60(A)	♦GESY	359 - 50
V151DA40	♦GESY	437 -101
V151DB40(A)	♦GESY	359 - 51
V172BB60	♦GESY	437 -102
V175LA2	♦GESY	437 -103
V175LA10A	♦GESY	437 -104
V180A-3	VEC	441 - 79
V180CH8(A)	♦GESY	330 - 51
V180MA1A	♦GESY	443 - 65
V180MA3B	♦GESY	443 - 66
V180SM8(A)	♦GESY	330 - 52
V180SM16(A)	♦GESY	330 - 53
V180ZA1	♦GESY	443 - 67
V180ZA05	♦GESY	437 -105
V180ZA5(A)	♦GESY	359 - 52
V180ZA10	♦GESY	443 - 68
V183R-2	VEC	441 - 80
V183R-7	VEC	441 - 81
V183R-9	VEC	441 - 82
V183R-20	VEC	441 - 83
V200CH8(A)	♦GESY	330 - 54
V200CP20(A)	♦GESY	330 - 55
V200SM8(A)	♦GESY	330 - 56
V200SM16(A)	♦GESY	330 - 57
V202BB60	♦GESY	437 -106
V216R-3	VEC	441 - 84
V216R-7	VEC	441 - 85
V216R-10	VEC	441 - 86
V216R-20	VEC	441 - 87
V220A-4	VEC	441 - 88
V220MA2A	♦GESY	443 - 69
V220MA4B	♦GESY	443 - 70
V220SM8(A)	♦GESY	330 - 58
V220SM16(A)	♦GESY	330 - 59
V220ZA05	♦GESY	437 -107
V230LA4	♦GESY	437 -108
V230LA20A	♦GESY	437 -109
V240CH8(A)	♦GESY	330 - 60
V240CP20(A)	♦GESY	330 - 61
V240SM8(A)	♦GESY	330 - 62
V240SM16(A)	♦GESY	330 - 63
V242BB60	♦GESY	437 -110
V250HE250	♦GESY	438 - 1
V250LA2	♦GESY	443 - 71
V250LA4	♦GESY	443 - 72
V250LA10	♦GESY	438 - 2
V250LA20A	♦GESY	443 - 73
V250LA40A	♦GESY	443 - 74
V250LA40B	♦GESY	443 - 75
V250PA40A	♦GESY	443 - 76
V250PA40C	♦GESY	443 - 77
V250R-3	VEC	441 - 89
V250R-10	VEC	441 - 90
V250R-12	VEC	441 - 91
V250R-25	VEC	441 - 92
V251BA60(A)	♦GESY	359 - 53
V251DA40	♦GESY	438 - 3
V251DB40(A)	♦GESY	359 - 54
V270A-4	VEC	441 - 93
V270MA2A	♦GESY	443 - 78
V270MA4B	♦GESY	443 - 79
V270SM8(A)	♦GESY	330 - 64
V270SM16(A)	♦GESY	330 - 65
V270ZA05	♦GESY	438 - 4
V271BA60(A)	♦GESY	359 - 55
V271DA40	♦GESY	438 - 5
V271DB40(A)	♦GESY	359 - 56
V275HE250	♦GESY	438 - 6
V275LA2	♦GESY	443 - 80
V275LA10	♦GESY	438 - 7
V275LA20A	♦GESY	443 - 81
V275LA40A	♦GESY	443 - 82
V275LA40B	♦GESY	443 - 83
V275PA40A(A)	♦GESY	443 - 84
V275PA40B	GESY	443 - 85
V275PA40C	♦GESY	443 - 86
V282BB60	♦GESY	443 - 87
V283R-3	VEC	441 - 94
V283R-10	VEC	441 - 95
V283R-12	VEC	441 - 96
V283R-30	VEC	441 - 97
V300LA2	♦GESY	443 - 88
V300LA4	♦GESY	443 - 89
V302CA42(A)	♦GESY	330 - 66
V320HE300	♦GESY	438 - 8
V320LA20A	♦GESY	443 - 90
V320LA40B	♦GESY	443 - 91
V320PA40A	♦GESY	443 - 92
V320PA40C	♦GESY	443 - 93
V321BA60(A)	♦GESY	359 - 57
V321DA40	♦GESY	438 - 9
V321DB40(A)	♦GESY	359 - 58
V322	♦VARO	288 - 86
V324	♦VARO	288 -184
V326	♦VARO	289 - 49
V328	♦VARO	289 -121
V330	♦VARO	287 -175
V330A-5	VEC	441 - 98
V330MA2A	♦GESY	443 - 94
V330MA5B	♦GESY	443 - 95
V330R-4	VEC	444 - 83

TYPE No.	MFRS	Pg&Line
V330R-11	VEC	444 - 84
V330R-13	VEC	444 - 85
V330R-34	VEC	444 - 86
V330X	♦VARO	257 -184
V330ZA05	♦GESY	438 - 10
V331	♦VARO	288 - 12
V331X	♦VARO	258 -106
V332	♦VARO	288 - 87
V332X	♦VARO	259 -105
V334	♦VARO	288 -185
V334X	♦VARO	260 - 69
V336	♦VARO	289 - 50
V336X	♦VARO	260 -200
V338	♦VARO	289 -122
V342	♦VARO	288 - 88
V344	♦VARO	288 -186
V346	♦VARO	289 - 51
V348	♦VARO	289 -123
V350	♦VARO	287 -176
V350R-4	VEC	444 - 87
V350R-11	VEC	444 - 88
V350R-13	VEC	444 - 89
V350R-36	VEC	444 - 90
V350X	♦VARO	257 -185
V351	♦VARO	288 - 13
V351X	♦VARO	258 -107
V352	♦VARO	288 - 89
V352X	♦VARO	259 -106
V354	♦VARO	288 -187
V354X	♦VARO	260 - 70
V356	♦VARO	289 - 52
V356X	♦VARO	260 -201
V358	♦VARO	289 -124
V360CH8(A)	♦GESY	330 - 67
V360SM8(A)	♦GESY	330 - 68
V360SM16(A)	♦GESY	330 - 69
V370A-5	VEC	441 - 99
V383R-5	VEC	441 -100
V383R-13	VEC	441 -101
V383R-15	VEC	441 -102
V383R-40	VEC	441 -103
V390A-6	VEC	441 -104
V390CH8(A)	♦GESY	330 - 70
V390MA3A	♦GESY	443 - 96
V390MA6B	♦GESY	443 - 97
V390SM8(A)	♦GESY	330 - 71
V390SM16(A)	♦GESY	330 - 72
V390ZA05	♦GESY	438 - 11
V416R-5	VEC	441 -105
V416R-15	VEC	441 -106
V416R-20	VEC	441 -107
V416R-45	VEC	441 -108
V420HE400	♦GESY	438 - 12
V420LA10	♦GESY	438 - 13
V420LA20A	♦GESY	438 - 14
V420LA40B	♦GESY	438 - 15
V420PA20A	GESY	443 - 98
V420PA40A	♦GESY	443 - 99
V420PA40C	♦GESY	443 -100
V421BA60	♦GESY	438 - 16
V421DA40	♦GESY	438 - 17
V421DB40(A)	♦GESY	359 - 59
V430A-7	VEC	441 -109
V430CH8(A)	♦GESY	330 - 73
V430MA3A	♦GESY	443 -101
V430MA7B	♦GESY	443 -102
V430SM8(A)	♦GESY	330 - 74
V430SM16(A)	♦GESY	330 - 75
V430ZA05	♦GESY	438 - 18
V450R-5	VEC	441 -110
V450R-15	VEC	442 - 1
V450R-20	VEC	442 - 2
V450R-45	VEC	442 - 3
V480HE450	♦GESY	438 - 19
V480LA40A	♦GESY	438 - 20
V480PA80A	♦GESY	443 -103
V480PA80C	♦GESY	443 -104
V481BA60	♦GESY	438 - 21
V481DA40	♦GESY	438 - 22
V481DB40(A)	♦GESY	359 - 60
V500R-6	VEC	444 - 91
V500R-16	VEC	444 - 92
V500R-22	VEC	444 - 93
V500R-50	VEC	444 - 94
V510HE500	♦GESY	438 - 23
V510LA40A	♦GESY	438 - 24
V510LA80B	♦GESY	438 - 25
V510PA80A	♦GESY	443 -105
V510PA80C	♦GESY	443 -106
V511DA40	♦GESY	438 - 26
V511DB40(A)	♦GESY	359 - 61
V550R-6	VEC	444 - 95
V550R-18	VEC	444 - 96
V550R-24	VEC	444 - 97
V550R-55	VEC	444 - 98
V571BA60	♦GESY	443 -107
V571DA40	♦GESY	438 - 27
V571DB40(A)	♦GESY	359 - 62
V575HE550	♦GESY	438 - 28
V575LA40A	♦GESY	438 - 29
V575LA80B	♦GESY	438 - 30
V575PA80C	♦GESY	443 -108
V660HE600(A)	♦GESY	359 - 63
V660LA50A(A)	♦GESY	359 - 64
V660LA100B(A)		359 - 65
	♦GESY	
V660PA100A	♦GESY	438 - 31
V660PA100C	♦GESY	438 - 32
V661BA60	♦GESY	438 - 33
V661DA40	♦GESY	438 - 34
V661DB40(A)	♦GESY	359 - 66
V700R-70	VEC	442 - 4
V730R-70	VEC	442 - 5
V741DB40(A)	♦GESY	359 - 67

△-Registered with JEDEC by this manufacturer

♦-Mfr's data sheet available in microfilm service

1. TYPE No. CROSS INDEX

IN TYPE NUMBER SEQUENCE

TYPE No.	MFRS	Pg&Line
V750HE700	♦GESY	443 -109
V751BA60	♦GESY	438 - 35
V751DA40	♦GESY	438 - 36
V765R-70	VEC	442 - 6
V800R-80	VEC	442 - 7
V850R-80	VEC	442 - 8
V881BA60	♦GESY	438 - 37
V1000LA80A	♦GESY	438 - 38
V1000LA160B(A)	♦GESY	359 - 68
V1000R-100	VEC	442 - 9
V1400R-100	VEC	442 - 10
V3310	VARO	402 -162
V3510	VARO	402 -163
V-1	CODI	248 -183
VA10	♦VARO	401 - 17
VA10X	♦VARO	241 -119
VA15	♦VARO	410 -206
VA15X	♦VARO	241 -137
VA20	♦VARO	414 -186
VA20X	♦VARO	241 -155
VA25	♦VARO	417 -106
VA25X	♦VARO	241 -162
VA30	♦VARO	419 - 46
VA30X	♦VARO	241 -177
VA35	♦VARO	420 -171
VB10	♦VARO	401 - 31
VB10X	♦VARO	241 -120
VB20	♦VARO	414 -204
VB20X	♦VARO	241 -156
VB30	♦VARO	419 - 64
VB30X	♦VARO	241 -178
VB40	♦VARO	421 -147
VB40X	♦VARO	241 -194
VB50	MAL	287 -187
	♦VARO	
VB50X	♦VARO	241 -215
VB60	♦VARO	424 -145
VB100	MAL	283 -168
VB100X	♦VARO	242 - 53
VB150X	♦VARO	242 - 95
VB200	MAL	284 - 16
VB400	MAL	284 -123
VB600	MAL	285 - 7
VBO2.2-14N02	BBCG	409 - 86
VBO2.2-14N04	BBCG	409 - 87
VBO2.2-14N05	BBCG	409 - 88
VBO2.2-14N06	BBCG	409 - 89
VBO13-04N01	BBCG	300 -118
VBO13-08N01	BBCG	300 -159
VBO13-10N01	BBCG	403 -152
VBO13-12N01	BBCG	407 - 2
VBO13-14N01	BBCG	409 -135
VBO13-16N01	BBCG	412 -127
VBO20-04N01	BBCG	301 -178
VBO20-08N01	BBCG	302 - 22
VBO20-10N01	BBCG	403 -175
VBO20-12N01	BBCG	407 - 29
VBO20-14N01	BBCG	409 -152
VBO20-16N01	BBCG	412 -141
VC20	♦VARO	415 - 67
VC20X	♦VARO	261 -174
VC30	♦VARO	419 -150
VC30X	♦VARO	261 -183
VC40	♦VARO	422 - 11
VC40X	♦VARO	261 -184
VC50	♦VARO	423 -207
VC50X	♦VARO	261 -185
VC60	♦VARO	424 -218
VC60X	♦VARO	261 -193
VC70	♦VARO	425 -103
VC70X	♦VARO	261 -194
VC80	♦VARO	426 - 89
VC80X	♦VARO	261 -201
VE08	♦VARO	360 -107
VE08X	♦VARO	272 -200
VE18	♦VARO	360 -137
VE18X	♦VARO	272 -205
VE27	♦VARO	360 -172
VE28	♦VARO	360 -173
VE28X	♦VARO	273 - 18
VE47	♦VARO	360 -207
VE48	♦VARO	360 -208
VE48X	♦VARO	273 - 40
VE67	♦VARO	361 - 28
VE68	♦VARO	361 - 29
VE68X	♦VARO	273 - 58
VE87	♦VARO	361 - 52
VE88	♦VARO	361 - 53
VE108	♦VARO	401 -199
VF5	♦VARO	423 -109
VF5-30	♦VARO	432 - 20
VF5X	♦VARO	241 -211
VF7	♦VARO	425 - 74
VF7X	VARO	242 - 16
VF10	♦VARO	427 - 59
VF10X	♦VARO	242 - 54
VF12	♦VARO	428 - 72
VF12X	♦VARO	242 - 76
VF15	♦VARO	429 - 47
VF15X	♦VARO	242 - 96
VF20	♦VARO	430 -135
VF20X	♦VARO	242 -120
VF25	♦VARO	431 -106
VF25X	♦VARO	242 -131
VF30	♦VARO	432 - 45
VF30X	♦VARO	242 -139
VF40	♦VARO	432 -212
VF40X	♦VARO	242 -148
VF50	♦VARO	433 - 47
VF50X	♦VARO	242 -156
VG1	♦VARO	401 - 32
VG1X	♦VARO	241 -118
VG2	♦VARO	414 -205

TYPE No.	MFRS	Pg&Line
VG2X	♦VARO	241 -154
VG3	♦VARO	419 - 65
VG3X	♦VARO	241 -175
VG4	♦VARO	421 -148
VG4X	♦VARO	241 -191
VG5	♦VARO	423 - 92
VG5X	♦VARO	241 -212
VG7	♦VARO	425 - 65
VG7X	♦VARO	242 - 17
VG10	♦VARO	427 - 36
VG10X	♦VARO	242 - 55
VG12	♦VARO	428 - 38
VG12X	♦VARO	242 - 77
VG15	♦VARO	429 - 21
VG15X	♦VARO	242 - 97
VG20	♦VARO	430 -111
VG20X	♦VARO	242 -121
VGB0101CAa	BBCG	372 - 6
VGB0102CAa	BBCG	372 - 8
VGB0103AAa	BBCG	364 - 86
VGB0103CAa	BBCG	364 - 87
VGB0104AAa	BBCG	364 - 88
VGB0104CAa	BBCG	364 - 89
VGB0124AY7A	BBCG	409 - 72
VGB0491MY7	BBCG	372 - 68
VGB0492MY7	BBCG	371 -159
VGB0493MY7	BBCG	371 -160
VGB0494MY7	BBCG	371 -161
VGB0501MY7	BBCG	372 - 69
VGB0502MY7	BBCG	371 -169
VGB0503MY7	BBCG	371 -170
VGB0504MY7	BBCG	371 -171
VGF0136AB	BBCG	362 -127
VH048	VARO	366 - 40
VH048X	♦VARO	365 -163
VH148	♦VARO	366 - 64
VH148X	♦VARO	365 -173
VH247	♦VARO	366 - 90
VH248	♦VARO	366 - 91
VH248X	♦VARO	365 -185
VH447	♦VARO	366 -119
VH448	♦VARO	366 -120
VH448X	♦VARO	365 -198
VH647	♦VARO	366 -147
VH648	♦VARO	366 -148
VH648X	♦VARO	366 - 3
VH847	♦VARO	366 -174
VH848	♦VARO	366 -175
VH1048	♦VARO	366 -193
VHE701	♦VARO	300 - 23
VHE702	♦VARO	300 - 54
VHE703	♦VARO	300 - 67
VHE704	♦VARO	300 - 88
VHE801	♦VARO	304 - 19
VHE802	♦VARO	304 - 35
VHE803	♦VARO	304 - 53
VHE804	♦VARO	304 - 67
VHE1401	♦VARO	293 -211
VHE1402	♦VARO	294 - 16
VHE1403	♦VARO	294 - 26
VHE1404	♦VARO	294 - 49
VHE2401	♦VARO	297 -105
VHE2402	♦VARO	297 -121
VHE2403	♦VARO	297 -133
VHE2404	♦VARO	297 -145
VHE2601	♦VARO	302 -124
VHE2602	♦VARO	302 -139
VHE2603	♦VARO	302 -151
VHE2604	♦VARO	302 -168
VJ048	VARO	367 -124
VJ048X	♦VARO	367 -116
VJ148	VARO	367 -155
VJ148X	♦VARO	367 -147
VJ247	♦VARO	367 -193
VJ248	♦VARO	367 -194
VJ248X	♦VARO	367 -185
VJ447	♦VARO	368 - 13
VJ448	♦VARO	368 - 14
VJ448X	♦VARO	368 - 5
VJ647	♦VARO	368 - 52
VJ648	♦VARO	368 - 53
VJ648X	♦VARO	368 - 43
VJ847	♦VARO	368 - 78
VJ848	♦VARO	368 - 79
VJ1048	♦VARO	368 - 92
VK048	♦VARO	370 -156
VK048X	♦VARO	370 -154
VK148	♦VARO	370 -164
VK148X	♦VARO	370 -162
VK247	♦VARO	370 -177
VK248	♦VARO	370 -178
VK248X	♦VARO	370 -175
VK447	♦VARO	370 -196
VK448	♦VARO	370 -197
VK448X	♦VARO	370 -194
VK647	♦VARO	370 -213
VK648	♦VARO	370 -214
VK848	♦VARO	371 - 2
VK1048	♦VARO	371 - 5
VL048	♦VARO	368 -209
VL148	♦VARO	369 - 6
VL247	♦VARO	369 - 32
VL248	♦VARO	369 - 33
VL447	♦VARO	369 - 59
VL448	♦VARO	369 - 60
VL647	♦VARO	369 - 84
VL648	♦VARO	369 - 85
VL848	♦VARO	369 -103
VL1048	♦VARO	369 -115
VM08	♦VARO	360 -100
VM18	♦VARO	360 -127
VM25	♦VARO	360 - 81
VM28	♦VARO	360 -160
VM48	♦VARO	360 -195

TYPE No.	MFRS	Pg&Line
VM68	♦VARO	361 - 18
VM88	♦VARO	361 - 45
VM108	♦VARO	361 - 67
VR5.6,A,B	SAR	173 - 69
VR6,A,B	SAR	174 - 20
VR6.2,A,B	SAR	175 -132
VR6.8,A,B	SAR	178 -119
VR7,A,B	SAR	179 - 23
VR7.5,A,B	SAR	180 -112
VR8.2,A,B	SAR	182 - 96
VR8.5,A,B	SAR	183 -103
VR9.1,A,B	SAR	185 -129
VR10,A,B	SAR	187 -190
VR11,A,B	SAR	189 -101
VR12,A,B	SAR	191 - 71
VR13,A,B	SAR	193 - 19
VR14,A,B	SAR	194 - 12
VR15,A,B	SAR	195 - 69
VR16,A,B	SAR	196 -162
VR18,A,B	SAR	198 -178
VR20,A,B	SAR	200 -168
VR22,A,B	SAR	202 - 69
VR24,A,B	SAR	203 -167
VR27,A,B	SAR	205 -105
VR28,A,B	SAR	206 - 54
VR30,A,B	SAR	207 - 30
VR33,A,B	SAR	208 -124
VR36,A,B	SAR	209 -188
VR39,A,B	SAR	211 - 22
VR43,A,B	SAR	212 - 32
VR47,A,B	SAR	213 - 47
VR51,A,B	SAR	214 - 44
VR56,A,B	SAR	215 - 31
VR60	♦DII	442 - 90
VR60B	♦RFE	442 - 91
VR60T	♦SAKJ	442 - 92
VR61T	SAKJ	442 - 93
VR62,A,B	SAR	216 - 37
VR67,A,B	SAR	216 -131
VR68,A,B	SAR	217 - 17
VR75,A,B	SAR	217 -200
VR80,A,B	SAR	218 -102
VR82,A,B	SAR	218 -179
VR90,A,B	SAR	219 - 92
VR91,A,B	SAR	219 -159
VR100,A,B	SAR	220 -119
VR105,A,B	SAR	221 - 21
VR110,A,B	SAR	221 - 82
VR120,A,B	SAR	222 - 32
VR130,A,B	SAR	222 -177
VR150,A,B	SAR	224 - 21
VR160,A,B	SAR	224 -153
VR180,A,B	SAR	225 -159
VR182A	♦DTL	164 - 23
VR182B	♦DTL	164 - 24
VR182C	♦DTL	164 - 25
VR200,A,B	SAR	226 -163
VR-60	SAKJ	442 - 94
VR-60B	ORIJ	442 - 95
VR-61	SAKJ	442 - 96
VR-61B	ORIJ	442 - 97
VS048	♦VARO	362 -192
VS048X	♦VARO	272 -201
VS148	♦VARO	363 - 22
VS148X	♦VARO	272 -206
VS247	♦VARO	363 - 64
VS248	♦VARO	363 - 65
VS248X	♦VARO	273 - 19
VS447	♦VARO	363 -111
VS448	♦VARO	363 -112
VS448X	♦VARO	273 - 41
VS647	♦VARO	363 -156
VS648	♦VARO	363 -157
VS648X	♦VARO	286 -158
VS847	♦VARO	363 -194
VS848	♦VARO	363 -195
VS1048	♦VARO	364 - 5
VSB51	♦VARO	360 - 48
VSB52	♦VARO	360 - 49
VSB53	♦VARO	360 - 50
VSB54	♦VARO	360 - 51
VSH200A	♦SELI	235 -166
VSH202A	♦SELI	235 -167
VSH212A	♦SELI	235 -168
VSH222A	♦SELI	235 -169
VSH242A	♦SELI	235 -170
VSH252A	♦SELI	235 -171
VSK12	♦VARO	294 -169
VSK13	♦VARO	375 -153
VSK14	♦VARO	375 -154
VSK31	♦VARO	375 - 79
VSK32	♦VARO	375 - 76
VSK41	♦VARO	375 - 24
VSK51	♦VARO	375 - 66
VSK51B	♦VARO	375 - 67
VSK62	♦VARO	291 - 95
VSK63	♦VARO	291 - 97
VSK64	♦VARO	291 - 98
VSK71	♦VARO	375 -126
VSK72	♦VARO	375 -125
VSK120	♦VARO	374 - 23
VSK130	♦VARO	374 - 31
VSK140	♦VARO	374 - 38
VSK231	♦VARO	375 - 80
VSK232	♦VARO	375 - 77
VSK320	♦VARO	374 - 68
VSK330	♦VARO	374 - 72
VSK340	♦VARO	374 - 77
VSK520	♦VARO	374 -101
VSK530	♦VARO	374 -104
VSK540	♦VARO	374 -108
VSK1520	♦VARO	374 -160
VSK1530	♦VARO	374 -165
VSK1540	♦VARO	374 -173

TYPE No.	MFRS	Pg&Line
VSK3020S	♦VARO	375 - 6
VSK3020T	♦VARO	375 -168
VSK3030S	♦VARO	375 - 9
VSK3030T	♦VARO	375 -169
VSK3040S	♦VARO	375 - 17
VSK3040T	♦VARO	375 -175
VSK4020	♦VARO	375 - 44
VSK4030	♦VARO	375 - 46
VSK4040	♦VARO	375 - 49
VT200	♦VARO	370 - 31
VT400	♦VARO	370 - 69
VT600	♦VARO	370 -102
VTA200	♦VARO	298 -189
VTA200S	♦VARO	298 -190
VTA200T	♦VARO	298 -191
VTA400	♦VARO	299 - 45
VTA400S	♦VARO	299 - 46
VTA400T	♦VARO	299 - 47
VTA600	♦VARO	299 -109
VTA600S	♦VARO	299 -110
VTA600T	♦VARO	299 -111
VTB200	♦VARO	298 -192
VTB200S	♦VARO	298 -193
VTB200T	♦VARO	298 -194
VTB400	♦VARO	299 - 48
VTB400S	♦VARO	299 - 49
VTB400T	♦VARO	299 - 50
VTB600	♦VARO	299 -112
VTB600S	♦VARO	299 -113
VTB600T	♦VARO	299 -114
VTC200	♦VARO	298 -195
VTC200S	♦VARO	298 -196
VTC200T	♦VARO	298 -197
VTC400	♦VARO	299 - 51
VTC400S	♦VARO	299 - 52
VTC400T	♦VARO	299 - 53
VTC600	♦VARO	299 -115
VTC600S	♦VARO	299 -116
VTC600T	♦VARO	299 -117
VTD200	♦VARO	298 -198
VTD200S	♦VARO	298 -199
VTD200T	♦VARO	298 -200
VTD400	♦VARO	299 - 54
VTD400S	♦VARO	299 - 55
VTD400T	♦VARO	299 - 56
VTD600	♦VARO	299 -118
VTD600S	♦VARO	299 -119
VTD600T	♦VARO	299 -120
VTE200	♦VARO	295 -199
VTH200	♦VARO	370 - 32
VTH400	♦VARO	370 - 70
VTH600	♦VARO	370 -103
VY100X	♦VARO	369 -220
VY200X	♦VARO	370 - 33
VY400X	♦VARO	370 - 71
VYA100X	♦VARO	272 -207
VYA100XL	♦VARO	272 -208
VYA100XS	♦VARO	258 -108
VYA100XT	♦VARO	272 -209
VYA200X	♦VARO	273 - 20
VYA200XL	♦VARO	273 - 21
VYA200XS	♦VARO	259 -107
VYA200XT	♦VARO	273 - 22
VYA400X	♦VARO	273 - 42
VYA400XL	♦VARO	273 - 43
VYA400XS	♦VARO	260 - 71
VYA400XT	♦VARO	273 - 44
VYB100X	♦VARO	272 -210
VYB100XL	♦VARO	273 - 1
VYB100XS	♦VARO	258 -109
VYB100XT	♦VARO	273 - 2
VYB200X	♦VARO	273 - 23
VYB200XL	♦VARO	273 - 24
VYB200XS	♦VARO	259 -108
VYB200XT	♦VARO	273 - 25
VYB400X	♦VARO	273 - 45
VYB400XL	♦VARO	273 - 46
VYB400XS	♦VARO	260 - 72
VYB400XT	♦VARO	273 - 47
VYC100X	♦VARO	273 - 3
VYC100XL	♦VARO	273 - 4
VYC100XS	♦VARO	258 -110
VYC100XT	♦VARO	273 - 5
VYC200X	♦VARO	273 - 26
VYC200XL	♦VARO	273 - 27
VYC200XS	♦VARO	259 -109
VYC200XT	♦VARO	273 - 28
VYC400X	♦VARO	273 - 48
VYC400XL	♦VARO	273 - 49
VYC400XS	♦VARO	260 - 73
VYC400XT	♦VARO	273 - 50
VYD100X	♦VARO	273 - 6
VYD100XL	♦VARO	273 - 7
VYD100XS	♦VARO	258 -111
VYD100XT	♦VARO	273 - 8
VYD200X	♦VARO	273 - 29
VYD200XL	♦VARO	273 - 30
VYD200XS	♦VARO	259 -110
VYD200XT	♦VARO	273 - 31
VYD400X	♦VARO	273 - 51
VYD400XL	♦VARO	273 - 52
VYD400XS	♦VARO	260 - 74
VYD400XT	♦VARO	273 - 53
VYH100X	♦VARO	370 - 1
VYH200X	♦VARO	370 - 34
VYH400X	♦VARO	370 - 72
W01F	♦FGRS	283 -134
W01L	♦DII	361 -171
W01MG	♦DII	361 -172
W02	♦GIC	361 -187
	♦RFE	
W02F	♦FGRS	283 -198
W02L	♦DII	362 - 4

TYPE No.	MFRS	Pg&Line
W02M	♦DII	361 -188
♦FEC	♦GIC	
W02MA	♦GIC	361 -189
W02MG	♦DII	362 - 5
W03A	♦HITJ	280 - 27
W03B	♦HITJ	280 -105
W03C	♦HITJ	280 -202
W04	♦GIC	362 - 22
	♦RFE	
W04F	♦FGRS	284 - 86
W04L	♦DII	362 - 41
W04M	♦DII	362 - 23
♦FEC	♦GIC	
W04MA	♦GIC	362 - 24
W04MG	♦DII	362 - 42
W005	♦GIC	361 -132
	♦RFE	
W005F	♦FGRS	283 - 84
W005L	♦DII	361 -146
W005M	♦DII	361 -133
♦FEC	♦GIC	
W005MG	♦DII	361 -147
W06	♦GIC	362 - 58
	♦RFE	
W06A	♦HITJ	277 -220
W06B	♦HITJ	278 - 34
W06C	♦HITJ	278 - 82
W06F	♦FGRS	284 -189
W06L	♦DII	362 - 75
W06M	♦DII	362 - 59
♦FEC	♦GIC	
W06MA	♦GIC	362 - 60
W06MG	♦DII	362 - 76
W08	♦GIC	362 - 84
	♦RFE	
W08F	♦FGRS	285 - 50
W08L	♦DII	362 -102
W08M	♦DII	362 - 85
♦FEC	♦GIC	
W08MA	♦GIC	362 - 86
W08MG	♦DII	362 -103
W09A	♦HITJ	241 - 68
W09B	♦HITJ	241 - 73
W09C	♦HITJ	241 - 80
W10	♦GIC	402 - 52
	♦RFE	
W10F	♦FGRS	402 - 53
W10L	♦DII	362 -119
W10M	♦DII	362 -110
♦FEC	♦GIC	
W10MG	♦DII	362 -120
W110	♦VARO	360 - 82
WAC1	♦SELI	442 - 11
WAC2	♦SELI	442 - 12
WAC3	♦SELI	442 - 13
WB100	♦DIX	360 - 89
WB101	♦DIX	360 -117
WB102	♦DIX	360 -150
WB104	♦DIX	360 -185
WB106	♦DIX	361 - 8
WB108	♦DIX	361 - 36
WB110	♦DIX	361 - 59
WB150	♦DIX	361 -134
WB151	♦DIX	361 -159
WB152	♦DIX	361 -190
WB154	♦DIX	362 - 25
WB156	♦DIX	362 - 61
WB158	♦DIX	362 - 87
WB200	♦DIX	362 -165
WB201	♦DIX	362 -199
WB202	♦DIX	363 - 31
WB204	♦DIX	363 - 79
WB206	♦DIX	363 -126
WB208	♦DIX	363 -166
WB210	♦DIX	363 -199
WBC1	♦SELI	442 - 14
WBC2	♦SELI	442 - 15
WBC3	♦SELI	442 - 16
WBC4	♦SELI	442 - 17
WBC5	♦SELI	442 - 18
WBC6	♦SELI	442 - 19
WBC7	♦SELI	442 - 20
WBC8	♦SELI	442 - 21
WBC9	♦SELI	442 - 22
WCN02	GIC	361 -191
WCN04	GIC	362 - 26
WCN005	GIC	361 -135
WCN06	GIC	362 - 62
WCN08	GIC	362 - 88
WCN10	GIC	402 - 54
WG713	♦ITTG	234 -142
WG1010A	♦ITTG	232 -112
WL01F	♦FGRS	280 - 79
WL02F	♦FGRS	280 -174
WL02M	♦GIC	360 -167
WL04F	♦FGRS	281 - 80
WL04M	♦GIC	360 -202
WL005F	FGRS	280 - 5
WL005M	♦GIC	360 -105
WL06F	♦FGRS	281 -195
WL06M	♦GIC	361 - 24
WL08F	♦FGRS	282 - 60
WL08M	♦GIC	361 - 50
WL10F	♦FGRS	401 -189
WL10M	♦GIC	361 - 70
WO-01	♦MEHK	283 -135
WO-02	♦MEHK	283 -199
WO-04	♦MEHK	284 - 87
WO-005	♦MEHK	283 - 85
WO-06	♦MEHK	284 -190
WO-08	♦MEHK	285 - 51
X04FG	♦VMI	254 -198
X06FG	♦VMI	255 - 92
X08FG	♦VMI	255 -177

Δ-Registered with JEDEC by this manufacturer

♦-Mfr's data sheet available in microfilm service

1. TYPE No. CROSS INDEX

IN TYPE NUMBER SEQUENCE

TYPE No.	MFRS	Pg&Line
X10FG	♦VMI	256 - 32
X15F	♦VMI	236 - 24
X15FG	♦VMI	249 -163
X15S	♦VMI	236 - 25
X15SG	♦VMI	249 -170
X15UF	♦VMI	236 - 30
X15UFG	♦VMI	249 -161
X20F	♦VMI	236 - 26
X20FG	♦VMI	249 -177
X20S	♦VMI	236 - 27
X20SG	♦VMI	249 -184
X20UF	♦VMI	236 - 31
X20UFG	♦VMI	249 -175
X25F	♦VMI	236 - 28
X25FG	♦VMI	249 -190
X25S	♦VMI	236 - 29
X25SG	♦VMI	249 -197
X25UF	♦VMI	236 - 32
X25UFG	♦VMI	249 -188
X30F	♦VMI	235 - 64
X30FG	♦VMI	249 -203
X30S	♦VMI	235 - 65
X30SG	♦VMI	249 -208
X30UF	♦VMI	235 - 70
X30UFG	♦VMI	249 -201
X40F	♦VMI	235 - 66
X40FG	♦VMI	249 -214
X40S	♦VMI	235 - 67
X40SG	♦VMI	249 -219
X40UF	♦VMI	235 - 71
X40UFG	♦VMI	249 -212
X50F	♦VMI	235 - 68
X50FG	♦VMI	250 - 4
X50S	♦VMI	235 - 69
X50SG	♦VMI	250 - 9
X50UF	♦VMI	235 - 72
X50UFG	♦VMI	250 - 2
X60F	♦VMI	234 -160
X60FG	♦VMI	250 - 15
X60S	♦VMI	234 -161
X60SG	♦VMI	250 - 19
X60UF	♦VMI	234 -166
X60UFG	♦VMI	250 - 13
X80F	♦VMI	234 -162
X80FG	♦VMI	250 - 26
X80S	♦VMI	234 -163
X80SG	♦VMI	250 - 28
X80UF	♦VMI	234 -167
X80UFG	♦VMI	250 - 24
X100F	♦VMI	234 -164
X100FG	♦VMI	250 - 33
X100S	♦VMI	234 -165
X100SG	♦VMI	250 - 37
X100UF	♦VMI	234 -168
X100UFG	♦VMI	250 - 31
X120FG	♦VMI	250 - 40
X120SG	♦VMI	250 - 41
X120UFG	♦VMI	250 - 39
X150FG	♦VMI	250 - 44
X150SG	♦VMI	250 - 46
X150UFG	♦VMI	250 - 42
Y10EA	♦HITJ	237 - 77
Y10GA	♦HITJ	237 - 78
Z0A0.7	SLCB	163 - 32
Z0A1.3	SLCB	163 - 67
Z0A1.4	SLCB	163 - 80
Z0A2.0	SLCB	163 -135
Z0A2.2	SLCB	163 -181
Z0A2.4	SLCB	164 - 43
Z0A2.7	SLCB	164 -161
Z0A3.0	SLCB	165 - 93
Z0A3.3	SLCB	166 - 29
Z0A3.6	SLCB	166 -204
Z0A3.9	SLCB	167 -169
Z0A4.3	SLCB	168 -194
Z0A4.7	SLCB	170 - 28
Z0A5.1	SLCB	171 -109
Z0A5.6	SLCB	172 -198
Z0A6.2	SLCB	175 - 50
Z0A6.8	SLCB	178 - 19
Z0A7.5	SLCB	180 - 17
Z0A8.2	SLCB	181 -201
Z0A9.1	SLCB	185 - 31
Z0A10	SLCB	187 - 76
Z0A11	SLCB	189 - 17
Z0A12	SLCB	190 -187
Z0A13	SLCB	192 -152
Z0A15	SLCB	194 -175
Z0A16	SLCB	196 - 80
Z0A18	SLCB	198 - 87
Z0A20	SLCB	200 - 82
Z0A22	SLCB	201 -192
Z0A24	SLCB	203 - 89
Z0A27	SLCB	205 - 22
Z0A30	SLCB	206 -159
Z0A33	SLCB	208 - 46
Z0B0.7	♦SLCB	163 - 33
Z0B1.3	♦SLCB	163 - 68
Z0B1.4	♦SLCB	163 - 81
Z0B2.0	♦SLCB	163 -140
Z0B2.2	♦SLCB	163 -186
Z0B2.4	♦SLCB	164 - 56
Z0B2.7	♦SLCB	164 -172
Z0B3.0	♦SLCB	165 -112
Z0B3.3	♦SLCB	166 - 43
Z0B3.6	♦SLCB	167 - 8
Z0B3.9	♦SLCB	167 -185
Z0B4.3	♦SLCB	168 -209
Z0B4.7	♦SLCB	170 - 44
Z0B5.1	♦SLCB	171 -125
Z0B5.6	♦SLCB	173 - 3
Z0B6.2	♦SLCB	175 - 68
Z0B6.8	♦SLCB	178 - 37
Z0B7.5	♦SLCB	180 - 35
Z0B8.2	♦SLCB	182 - 14
Z0B9.1	♦SLCB	185 - 50
Z0B10	♦SLCB	187 - 96
Z0B11	♦SLCB	189 - 36
Z0B12	♦SLCB	190 -208
Z0B13	♦SLCB	192 -173
Z0B15	♦SLCB	194 -193
Z0B16	♦SLCB	196 -103
Z0B18	♦SLCB	198 -107
Z0B20	♦SLCB	200 -106
Z0B22	♦SLCB	202 - 2
Z0B24	♦SLCB	203 -108
Z0B27	♦SLCB	205 - 40
Z0B30	♦SLCB	206 -176
Z0B33	♦SLCB	208 - 64
Z2B3.0	♦SLCB	165 -142
Z2B3.3	♦SLCB	166 -105
Z2B3.6	♦SLCB	167 - 76
Z2B3.9	♦SLCB	168 - 61
Z2B4.3	♦SLCB	169 - 81
Z2B4.7	♦SLCB	170 -138
Z2B5.1	♦SLCB	172 - 11
Z2B5.6	♦SLCB	173 -109
Z2B6.2	♦SLCB	175 -174
Z2B6.8	♦SLCB	178 -179
Z2B7.5	♦SLCB	180 -172
Z2B8.2	♦SLCB	182 -161
Z2B9.1	♦SLCB	185 -196
Z2B10	♦SLCB	188 - 61
Z2B11	♦SLCB	189 -175
Z2B12	♦SLCB	191 -150
Z2B13	♦SLCB	193 - 91
Z2B15	♦SLCB	195 -146
Z2B16	♦SLCB	197 - 25
Z2B18	♦SLCB	199 - 44
Z2B20	♦SLCB	201 - 37
Z2B22	♦SLCB	202 -144
Z2B24	♦SLCB	204 - 31
Z2B27	♦SLCB	205 -185
Z2B30	♦SLCB	207 -109
Z2B33	♦SLCB	208 -202
Z2B36	♦SLCB	210 - 51
Z2B39	♦SLCB	211 - 88
Z2B43	♦SLCB	212 - 99
Z2B47	♦SLCB	213 -116
Z2B51	♦SLCB	214 -111
Z2B56	♦SLCB	215 -100
Z2B62	♦SLCB	216 -104
Z2B68	♦SLCB	217 - 85
Z2B75	♦SLCB	218 - 68
Z2B82	♦SLCB	219 - 42
Z2B91	♦SLCB	220 - 21
Z2B100	♦SLCB	220 -183
Z2B110	♦SLCB	221 -142
Z2B120	♦SLCB	222 - 96
Z2B130	♦SLCB	223 - 49
Z2B150	♦SLCB	224 - 83
Z2B160	♦SLCB	225 - 20
Z2B180	♦SLCB	226 - 42
Z2B200	♦SLCB	227 - 37
Z2B400	♦SLCB	227 -187
Z2.7	SCH	164 -195
Z3A3.0	SLCB	377 - 34
Z3A3.3	SLCB	377 - 54
Z3A3.6	SLCB	377 - 76
Z3A3.9	SLCB	377 - 99
Z3A4.3	SLCB	377 -139
Z3A4.7	SLCB	378 - 19
Z3A5.1	SLCB	378 - 65
Z3A5.6	SLCB	378 -107
Z3A6.2	SLCB	378 -160
Z3A6.8	SLCB	379 - 41
Z3A7.5	SLCB	379 -175
Z3A8.2	SLCB	380 - 80
Z3A9.1	SLCB	381 - 3
Z3A10	SLCB	381 -106
Z3A11	SLCB	381 -199
Z3A12	SLCB	382 -114
Z3A13	SLCB	383 - 27
Z3A15	SLCB	383 -195
Z3A16	SLCB	384 -100
Z3A18	SLCB	385 - 61
Z3A20	SLCB	386 - 13
Z3A22	SLCB	386 -116
Z3A24	SLCB	387 - 35
Z3A27	SLCB	387 -174
Z3A30	SLCB	388 - 93
Z3A33	SLCB	388 -199
Z3A36	SLCB	389 -112
Z3A39	SLCB	390 - 4
Z3A43	SLCB	390 -113
Z3A47	SLCB	391 - 46
Z3A51	SLCB	391 -183
Z3A56	SLCB	392 -102
Z3A62	SLCB	393 - 18
Z3A68	SLCB	393 -109
Z3A75	SLCB	394 - 31
Z3A82	SLCB	394 -137
Z3A91	SLCB	395 - 47
Z3A100	SLCB	395 -152
Z3A110	SLCB	396 - 74
Z3A120	SLCB	396 -161
Z3A130	SLCB	397 - 50
Z3A150	SLCB	397 -187
Z3A160	SLCB	398 - 76
Z3A180	SLCB	399 - 1
Z3A200	SLCB	399 - 98
Z3B3.0	♦SLCB	377 - 36
Z3B3.3	♦SLCB	377 - 56
Z3B3.6	♦SLCB	377 - 78
Z3B3.9	♦SLCB	377 -103
Z3B4.3	♦SLCB	377 -142
Z3B4.7	♦SLCB	378 - 24
Z3B5.1	♦SLCB	378 - 68
Z3B5.6	♦SLCB	378 -112
Z3B6.2	♦SLCB	378 -166
Z3B6.8	♦SLCB	379 - 53
Z3B7.5	♦SLCB	379 -185
Z3B8.2	♦SLCB	380 - 93
Z3B9.1	♦SLCB	381 - 15
Z3B10	♦SLCB	381 -121
Z3B11	♦SLCB	382 - 11
Z3B12	♦SLCB	382 -130
Z3B13	♦SLCB	383 - 39
Z3B15	♦SLCB	384 - 14
Z3B16	♦SLCB	384 -113
Z3B18	♦SLCB	385 - 76
Z3B20	♦SLCB	386 - 26
Z3B22	♦SLCB	386 -131
Z3B24	♦SLCB	387 - 48
Z3B27	♦SLCB	387 -190
Z3B30	♦SLCB	388 -107
Z3B33	♦SLCB	389 - 14
Z3B36	♦SLCB	389 -124
Z3B39	♦SLCB	390 - 16
Z3B43	♦SLCB	390 -124
Z3B47	♦SLCB	391 - 58
Z3B51	♦SLCB	391 -194
Z3B56	♦SLCB	392 -115
Z3B62	♦SLCB	393 - 29
Z3B68	♦SLCB	393 -122
Z3B75	♦SLCB	394 - 43
Z3B82	♦SLCB	394 -149
Z3B91	♦SLCB	395 - 58
Z3B100	♦SLCB	395 -166
Z3B110	♦SLCB	396 - 85
Z3B120	♦SLCB	396 -172
Z3B130	♦SLCB	397 - 61
Z3B150	♦SLCB	398 - 4
Z3B160	♦SLCB	398 - 85
Z3B180	♦SLCB	399 - 10
Z3B200	♦SLCB	399 -107
Z3.0	SCH	165 -135
Z3.3#B	SCH	166 - 79
Z3.6#B	SCH	167 - 47
Z3.9	SCH	168 - 26
Z04FG	♦VMI	254 -199
Z4A3.0	SLCB	165 -131
Z4A3.3	SLCB	166 - 68
Z4A3.6	SLCB	167 - 33
Z4A3.9	SLCB	168 - 12
Z4A4.3	SLCB	169 - 34
Z4A4.7	SLCB	170 - 85
Z4A5.1	SLCB	171 -167
Z4A5.6	SLCB	173 - 50
Z4A6.2	SLCB	175 -112
Z4A6.8	SLCB	178 - 90
Z4A7.5	SLCB	180 - 84
Z4A8.2	SLCB	182 - 67
Z4A9.1	SLCB	185 -101
Z4A10	SLCB	187 -156
Z4A11	SLCB	189 - 73
Z4A12	SLCB	191 - 37
Z4A13	SLCB	192 -206
Z4A15	SLCB	195 - 38
Z4A16	SLCB	196 -135
Z4A18	SLCB	198 -149
Z4A20	SLCB	200 -142
Z4A22	SLCB	202 - 41
Z4A24	SLCB	203 -142
Z4A27	SLCB	205 - 77
Z4A30	SLCB	207 - 5
Z4A33	SLCB	208 - 97
Z4A36	SLCB	209 -164
Z4A39	SLCB	210 -201
Z4A43	SLCB	212 - 13
Z4A47	SLCB	213 - 29
Z4A51	SLCB	214 - 28
Z4A56	SLCB	215 - 13
Z4A62	SLCB	216 - 20
Z4A68	SLCB	216 -195
Z4A75	SLCB	217 -183
Z4A82	SLCB	218 -162
Z4A91	SLCB	219 -145
Z4A100	SLCB	220 -102
Z4A110	SLCB	221 - 67
Z4A120	SLCB	222 - 18
Z4A130	SLCB	222 -162
Z4A150	SLCB	224 - 6
Z4A160	SLCB	224 -140
Z4A180	SLCB	225 -145
Z4A200	SLCB	226 -149
Z4B3.0	♦SLCB	165 -136
Z4B3.3	♦SLCB	166 - 80
Z4B3.6	♦SLCB	167 - 48
Z4B3.9	♦SLCB	168 - 27
Z4B4.3	♦SLCB	169 - 48
Z4B4.7	♦SLCB	170 -102
Z4B5.1	♦SLCB	171 -185
Z4B5.6	♦SLCB	173 - 70
Z4B6.2	♦SLCB	175 -133
Z4B6.8	♦SLCB	178 -120
Z4B7.5	♦SLCB	180 -113
Z4B8.2	♦SLCB	182 - 97
Z4B9.1	♦SLCB	185 -130
Z4B10	♦SLCB	187 -191
Z4B11	♦SLCB	189 -102
Z4B12	♦SLCB	191 - 72
Z4B13	♦SLCB	193 - 20
Z4B15	♦SLCB	195 - 70
Z4B16	♦SLCB	196 -163
Z4B18	♦SLCB	198 -179
Z4B20	♦SLCB	200 -169
Z4B22	♦SLCB	202 - 70
Z4B24	♦SLCB	203 -168
Z4B27	♦SLCB	205 -106
Z4B30	♦SLCB	207 - 31
Z4B33	♦SLCB	208 -125
Z4B36	♦SLCB	209 -189
Z4B39	♦SLCB	211 - 23
Z4B43	♦SLCB	212 - 33
Z4B47	♦SLCB	213 - 48
Z4B51	♦SLCB	214 - 45
Z4B56	♦SLCB	215 - 32
Z4B62	♦SLCB	216 - 38
Z4B68	♦SLCB	217 - 18
Z4B75	♦SLCB	218 - 1
Z4B82	♦SLCB	218 -180
Z4B91	♦SLCB	219 -160
Z4B100	♦SLCB	220 -120
Z4B110	♦SLCB	221 - 83
Z4B120	♦SLCB	222 - 33
Z4B130	♦SLCB	222 -178
Z4B150	♦SLCB	224 - 22
Z4B160	♦SLCB	224 -154
Z4B180	♦SLCB	225 -160
Z4B200	♦SLCB	226 -164
Z4.3	SCH	169 - 49
Z4.7	SCH	170 -103
Z5A3.0	SLCB	165 - 66
Z5A3.3	SLCB	165 -200
Z5A3.6	SLCB	166 -170
Z5A3.9	SLCB	167 -136
Z5A4.3	SLCB	168 -147
Z5A4.7	SLCB	169 -184
Z5A5.1	SLCB	171 - 60
Z5A5.6	SLCB	172 -142
Z5A6.2	SLCB	174 -155
Z5A6.8	SLCB	177 -180
Z5A7.5	SLCB	179 -171
Z5A8.2	SLCB	181 -152
Z5A9.1	SLCB	184 -199
Z5A10	SLCB	187 - 24
Z5A11	SLCB	188 -185
Z5A12	SLCB	190 -144
Z5A13	SLCB	192 -120
Z5A15	SLCB	194 -143
Z5A16	SLCB	196 - 49
Z5A18	SLCB	198 - 53
Z5A20	SLCB	200 - 54
Z5A22	SLCB	201 -158
Z5A24	SLCB	203 - 62
Z5A27	SLCB	204 -203
Z5A30	SLCB	206 -129
Z5A33	SLCB	208 - 16
Z5B3.0	♦SLCB	165 - 85
Z5B3.3	♦SLCB	166 - 15
Z5B3.6	♦SLCB	166 -192
Z5B3.9	♦SLCB	167 -157
Z5B4.3	♦SLCB	168 -175
Z5B4.7	♦SLCB	170 - 12
Z5B5.1	♦SLCB	171 - 95
Z5B5.6	♦SLCB	172 -183
Z5B6.2	♦SLCB	174 -212
Z5B6.8	♦SLCB	178 - 4
Z5B7.5	♦SLCB	180 - 3
Z5B8.2	♦SLCB	181 -186
Z5B9.1	♦SLCB	185 - 18
Z5B10	♦SLCB	187 - 62
Z5B11	♦SLCB	189 - 8
Z5B12	♦SLCB	190 -174
Z5B13	♦SLCB	192 -143
Z5B15	♦SLCB	194 -166
Z5B16	♦SLCB	196 - 72
Z5B18	♦SLCB	198 - 77
Z5B20	♦SLCB	200 - 75
Z5B22	♦SLCB	201 -181
Z5B24	♦SLCB	203 - 81
Z5B27	♦SLCB	205 - 15
Z5B30	♦SLCB	206 -150
Z5B33	♦SLCB	208 - 38
Z5.1	SCH	171 -186
Z5.6	SCH	173 - 71
Z06FG	♦VMI	255 - 93
Z6A3.6	SLCB	377 - 88
Z6A3.9	SLCB	377 -126
Z6A4.3	SLCB	378 - 2
Z6A4.7	SLCB	378 - 47
Z6A5.1	SLCB	378 - 90
Z6A5.6	SLCB	378 -137
Z6A6.2	SLCB	378 -191
Z6A6.8	SLCB	379 - 98
Z6A7.5	SLCB	380 - 21
Z6A8.2	SLCB	380 -132
Z6A9.1	SLCB	381 - 55
Z6A10	SLCB	381 -163
Z6A11	SLCB	382 - 51
Z6A12	SLCB	382 -174
Z6A13	SLCB	383 - 81
Z6A15	SLCB	384 - 60
Z6A16	SLCB	384 -157
Z6A18	SLCB	385 -122
Z6A20	SLCB	386 - 69
Z6A22	SLCB	386 -176
Z6A24	SLCB	387 - 89
Z6A27	SLCB	388 - 31
Z6A30	SLCB	388 -147
Z6A33	SLCB	389 - 56
Z6A36	SLCB	389 -165
Z6A39	SLCB	390 - 56
Z6A43	SLCB	390 -162
Z6A47	SLCB	391 - 98
Z6A51	SLCB	392 - 28
Z6A56	SLCB	392 -155
Z6A62	SLCB	393 - 68
Z6A68	SLCB	393 -162
Z6A75	SLCB	394 - 84
Z6A82	SLCB	394 -187
Z6A91	SLCB	395 - 96
Z6A100	SLCB	396 - 8
Z6A110	SLCB	396 -123
Z6A120	SLCB	397 - 13
Z6A130	SLCB	397 - 99
Z6A150	SLCB	398 - 42
Z6A160	SLCB	398 -119
Z6A180	SLCB	399 - 45
Z6A200	SLCB	399 -140
Z6B3.6	♦SLCB	377 - 89
Z6B3.9	♦SLCB	377 -127
Z6B4.3	♦SLCB	378 - 3
Z6B4.7	♦SLCB	378 - 48
Z6B5.1	♦SLCB	378 - 91
Z6B5.6	♦SLCB	378 -138
Z6B6.2	♦SLCB	378 -192
Z6B6.8	♦SLCB	379 - 99
Z6B7.5	♦SLCB	380 - 23
Z6B8.2	♦SLCB	380 -134
Z6B9.1	♦SLCB	381 - 56
Z6B10	♦SLCB	381 -165
Z6B11	♦SLCB	382 - 53
Z6B12	♦SLCB	382 -176
Z6B13	♦SLCB	383 - 83
Z6B15	♦SLCB	384 - 62
Z6B16	♦SLCB	384 -159
Z6B18	♦SLCB	385 -124
Z6B20	♦SLCB	386 - 71
Z6B22	♦SLCB	386 -178
Z6B24	♦SLCB	387 - 91
Z6B27	♦SLCB	388 - 33
Z6B30	♦SLCB	388 -149
Z6B33	♦SLCB	389 - 58
Z6B36	♦SLCB	389 -167
Z6B39	♦SLCB	390 - 58
Z6B43	♦SLCB	390 -164
Z6B47	♦SLCB	391 -100
Z6B51	♦SLCB	392 - 30
Z6B56	♦SLCB	392 -157
Z6B62	♦SLCB	393 - 70
Z6B68	♦SLCB	393 -164
Z6B75	♦SLCB	394 - 86
Z6B82	♦SLCB	394 -188
Z6B91	♦SLCB	395 - 97
Z6B100	♦SLCB	396 - 9
Z6B110	♦SLCB	396 -124
Z6B120	♦SLCB	397 - 14
Z6B130	♦SLCB	397 -100
Z6B150	♦SLCB	398 - 43
Z6B160	♦SLCB	398 -120
Z6B180	♦SLCB	399 - 46
Z6B200	♦SLCB	399 -141
Z6.2	SCH	175 -134
Z6.8	SCH	178 -121
Z7A3.0	SLCB	377 - 40
Z7A3.3	SLCB	377 - 60
Z7A3.6	SLCB	377 - 82
Z7A3.9	SLCB	377 -110
Z7A4.3	SLCB	377 -148
Z7A4.7	SLCB	378 - 31
Z7A5.1	SLCB	378 - 74
Z7A5.6	SLCB	378 -121
Z7A6.2	SLCB	378 -174
Z7A6.8	SLCB	379 - 74
Z7A7.5	SLCB	379 -204
Z7A8.2	SLCB	380 -114
Z7A9.1	SLCB	381 - 36
Z7A10	SLCB	381 -146
Z7A11	SLCB	382 - 33
Z7A12	SLCB	382 -156
Z7A13	SLCB	383 - 63
Z7A15	SLCB	384 - 41
Z7A16	SLCB	384 -138
Z7A18	SLCB	385 -104
Z7A20	SLCB	386 - 51
Z7A22	SLCB	386 -158
Z7A24	SLCB	204 - 28
Z7A27	SLCB	205 -182
Z7A30	SLCB	207 -106
Z7A33	SLCB	208 -199
Z7A36	SLCB	210 - 48
Z7A39	SLCB	211 - 85
Z7A43	SLCB	212 - 96
Z7A47	SLCB	213 -113
Z7A51	SLCB	214 -108
Z7A56	SLCB	215 - 97
Z7A62	SLCB	216 -101
Z7A68	SLCB	217 - 82
Z7A75	SLCB	218 - 65
Z7A82	SLCB	219 - 40
Z7A91	SLCB	220 - 19
Z7A100	SLCB	220 -181
Z7A110	SLCB	221 -141
Z7A120	SLCB	222 - 95
Z7A130	SLCB	223 - 46
Z7A150	SLCB	224 - 80
Z7A160	SLCB	225 - 19
Z7A180	SLCB	226 - 41
Z7A200	SLCB	227 - 34
Z7A400	SLCB	227 -186
Z7B3.0	♦SLCB	377 - 41
Z7B3.3	♦SLCB	377 - 62
Z7B3.6	♦SLCB	377 - 84
Z7B3.9	♦SLCB	377 -112
Z7B4.3	♦SLCB	377 -150
Z7B4.7	♦SLCB	378 - 33
Z7B5.1	♦SLCB	378 - 76
Z7B5.6	♦SLCB	378 -123
Z7B6.2	♦SLCB	378 -176
Z7B6.8	♦SLCB	379 - 76
Z7B7.5	♦SLCB	380 - 1
Z7B8.2	♦SLCB	380 -116
Z7B9.1	♦SLCB	381 - 38
Z7B10	♦SLCB	381 -147
Z7B11	♦SLCB	382 - 35
Z7B12	♦SLCB	382 -158
Z7B13	♦SLCB	383 - 65
Z7B15	♦SLCB	384 - 44

Δ-Registered with JEDEC by this manufacturer

♦-Mfr's data sheet available in microfilm service

1. TYPE No. CROSS INDEX

IN TYPE NUMBER SEQUENCE

TYPE No.	MFRS	Pg&Line
Z7B16	♦SLCB	384 -140
Z7B18	♦SLCB	385 -106
Z7B20	♦SLCB	386 - 53
Z7B22	♦SLCB	386 -160
Z7B24	♦SLCB	387 - 74
Z7B27	♦SLCB	388 - 16
Z7B30	♦SLCB	388 -132
Z7B33	♦SLCB	389 - 41
Z7B36	♦SLCB	389 -150
Z7B39	♦SLCB	390 - 41
Z7B43	♦SLCB	390 -148
Z7B47	♦SLCB	391 - 83
Z7B51	♦SLCB	392 - 14
Z7B56	♦SLCB	392 -141
Z7B62	♦SLCB	393 - 53
Z7B68	♦SLCB	393 -147
Z7B75	♦SLCB	394 - 69
Z7B82	♦SLCB	394 -172
Z7B91	♦SLCB	395 - 81
Z7B100	♦SLCB	395 -191
Z7B110	♦SLCB	396 -108
Z7B120	♦SLCB	396 -195
Z7B130	♦SLCB	397 - 84
Z7B150	♦SLCB	398 - 27
Z7B160	♦SLCB	398 -104
Z7B180	♦SLCB	399 - 30
Z7B200	♦SLCB	399 -126
Z7B400	♦SLCB	400 - 34
Z7.5	SCH	180 -114
Z08FG	♦VMI	255 -178
Z8.2	SCH	182 - 98
Z9.1	SCH	185 -131
Z10FG	♦VMI	256 - 33
Z10.0	SCH	187 -192
Z11.0	SCH	189 -103
Z12.0	SCH	191 - 73
Z13.0	SCH	193 - 21
Z15F	♦VMI	411 - 93
Z15FG	♦VMI	256 -112
Z15S	♦VMI	411 - 94
Z15SG	♦VMI	256 -116
Z15UF	♦VMI	411 - 81
Z15UFG	♦VMI	256 -108
Z15.0	SCH	195 - 71
Z16.0	SCH	196 -164
Z18.0	SCH	198 -180
Z20F	♦VMI	415 - 61
Z20FG	♦VMI	256 -138
Z20S	♦VMI	415 - 63
Z20SG	♦VMI	256 -144
Z20UF	♦VMI	415 - 54
Z20UFG	♦VMI	256 -133
Z20.0	SCH	200 -170
Z22.0	SCH	202 - 71
Z24.0	SCH	203 -169
Z25F	♦VMI	417 -168
Z25FG	♦VMI	256 -161
Z25S	♦VMI	417 -170
Z25SG	♦VMI	256 -164
Z25UF	♦VMI	417 -159
Z25UFG	♦VMI	256 -153
Z27.0	SCH	205 -107
Z30F	♦VMI	419 -133
Z30FG	♦VMI	256 -177
Z30S	♦VMI	419 -136
Z30SG	♦VMI	256 -181
Z30UF	♦VMI	419 -128
Z30UFG	♦VMI	256 -172
Z30.0	SCH	207 - 32
Z33.0	SCH	208 -126
Z40F	♦VMI	421 -214
Z40FG	♦VMI	256 -198
Z40S	♦VMI	421 -215
Z40SG	♦VMI	256 -201
Z40UF	♦VMI	421 -210
Z40UFG	♦VMI	256 -194
Z50F	♦VMI	423 -177
Z50FG	♦VMI	256 -216
Z50S	♦VMI	423 -183
Z50SG	♦VMI	257 - 1
Z50UF	♦VMI	423 -174
Z50UFG	♦VMI	256 -208
Z60F	♦VMI	424 -203
Z60FG	♦VMI	257 - 13
Z60S	♦VMI	424 -207
Z60SG	♦VMI	257 - 17
Z60UF	♦VMI	424 -196
Z60UFG	♦VMI	257 - 10
Z80F	♦VMI	426 - 73
Z80FG	♦VMI	257 - 37
Z80S	♦VMI	426 - 77
Z80SG	♦VMI	257 - 40
Z80UF	♦VMI	426 - 67
Z80UFG	♦VMI	257 - 34
Z100	♦DII	220 - 55
	♦RECT	
Z100F	♦VMI	427 -124
Z100FG	♦VMI	257 - 55
Z100S	♦VMI	427 -133
Z100SG	♦VMI	257 - 57
Z100UF	♦VMI	427 -105
Z100UFG	♦VMI	257 - 49
Z110	♦DII	221 - 34
	♦RECT	
Z115	♦DII	221 -169
	RECT	
Z120	♦DII	222 - 49
	♦RECT	
Z130	♦DII	223 - 4
	♦RECT	
Z135	♦DII	223 - 76
	RECT	
Z140	♦DII	223 - 79
	♦RECT	

TYPE No.	MFRS	Pg&Line
Z150	♦DII	224 - 37
	♦RECT	
Z160	♦DII	224 -167
	RECT	
Z170	♦DII	225 - 48
	♦RECT	
Z180	♦DII	225 -176
	RECT	
Z190	♦DII	226 - 81
	RECT	
Z200	♦DII	226 -178
	RECT	
Z300	♦DII	227 -119
	♦RECT	
Z330	♦DII	227 -144
	RECT	
ZAG100A1	♦HITJ	330 - 76
ZAG100A2	♦HITJ	330 - 77
ZAG100A3	♦HITJ	330 - 78
ZAG100A4	♦HITJ	330 - 79
ZAG100A05	♦HITJ	330 - 80
ZB3.3	♦SCN	166 - 89
ZB3.3A	♦SCN	166 - 87
ZB3.3B	♦SCN	166 - 81
ZB3.6	♦SCN	167 - 57
ZB3.6A	♦SCN	167 - 54
ZB3.6B	♦SCN	167 - 49
ZB3.9	♦SCN	168 - 38
ZB3.9A	♦SCN	168 - 35
ZB3.9B	♦SCN	168 - 28
ZB4.3	♦SCN	169 - 58
ZB4.3A	♦SCN	169 - 55
ZB4.3B	♦SCN	169 - 50
ZB4.7	♦SCN	170 -114
ZB4.7A	♦SCN	170 -111
ZB4.7B	♦SCN	170 -104
ZB5.1	♦SCN	171 -195
ZB5.1A	♦SCN	171 -192
ZB5.1B	♦SCN	171 -187
ZB5.6	♦SCN	173 - 83
ZB5.6A	♦SCN	173 - 80
ZB5.6B	MAL	173 - 72
	♦SCN	
ZB6.2	♦SCN	175 -146
ZB6.2A	♦SCN	175 -143
ZB6.2B	♦SCN	175 -135
ZB6.8	♦SCN	178 -122
ZB6.8A	♦SCN	178 -139
ZB6.8B	♦MAL	178 -123
	♦SCN	
ZB7.5	♦SCN	180 -115
ZB7.5A	♦SCN	180 -131
ZB7.5B	♦MAL	180 -133
	♦SCN	
ZB8.2	♦SCN	182 - 99
ZB8.2A	♦SCN	182 -120
ZB8.2B	SCN	182 -100
ZB9.1	♦SCN	185 -132
ZB9.1A	♦SCN	185 -148
ZB9.1B	♦MAL	185 -133
	♦SCN	
ZB10	♦SCN	187 -193
ZB10A	♦SCN	188 - 7
ZB10B	♦SCN	187 -194
ZB11	♦SCN	189 -104
ZB11A	♦SCN	189 -121
ZB11B	♦MAL	189 -105
	♦SCN	
ZB12	♦SCN	191 - 74
ZB12A	♦SCN	191 - 96
ZB12B	♦MAL	191 - 75
	♦SCN	
ZB13	♦SCN	193 - 22
ZB13A	♦SCN	193 - 40
ZB13B	♦SCN	193 - 23
ZB15	♦SCN	195 - 72
ZB15A	♦SCN	195 - 95
ZB15B	♦MAL	195 - 73
	♦SCN	
ZB16	♦SCN	196 -165
ZB16A	♦SCN	196 -184
ZB16B	♦MAL	196 -166
	♦SCN	
ZB18	♦SCN	198 -181
ZB18A	♦SCN	198 -203
ZB18B	♦SCN	198 -182
ZB20	♦SCN	200 -171
ZB20A	♦SCN	200 -193
ZB20B	♦MAL	200 -172
	♦SCN	
ZB22	♦SCN	202 - 72
ZB22A	♦SCN	202 - 93
ZB22B	♦SCN	202 - 73
ZB24	♦SCN	203 -170
ZB24A	♦SCN	203 -188
ZB24B	♦MAL	203 -171
	♦SCN	
ZB27	♦SCN	205 -108
ZB27A	♦SCN	205 -131
ZB27B	♦MAL	205 -109
	♦SCN	
ZB30	♦SCN	207 - 33
ZB30A	♦SCN	207 - 55
ZB30B	♦SCN	207 - 34
ZB33	♦SCN	208 -127
ZB33A	♦SCN	208 -148
ZB33B	♦MAL	208 -128
	♦SCN	
ZB36	♦SCN	209 -190
ZB36A	♦SCN	210 - 1
ZB36B	♦SCN	209 -191
ZB39	♦SCN	211 - 24
ZB39A	♦SCN	211 - 38

TYPE No.	MFRS	Pg&Line
ZB39B	♦MAL	211 - 25
	♦SCN	
ZB43	♦SCN	212 - 34
ZB43A	♦SCN	212 - 47
ZB43B	♦MAL	212 - 35
	♦SCN	
ZB47	♦SCN	213 - 49
ZB47A	♦SCN	213 - 63
ZB47B	♦SCN	213 - 50
ZB51	♦SCN	214 - 46
ZB51A	♦SCN	214 - 58
ZB51B	♦MAL	214 - 47
	♦SCN	
ZB56	♦SCN	215 - 33
ZB56A	♦SCN	215 - 48
ZB56B	♦SCN	215 - 34
ZB62	♦SCN	216 - 39
ZB62A	♦SCN	216 - 52
ZB62B	♦MAL	216 - 40
	♦SCN	
ZB68	♦SCN	217 - 19
ZB68A	♦SCN	217 - 33
ZB68B	♦MAL	217 - 20
	♦SCN	
ZB75	♦SCN	218 - 2
ZB75A	♦SCN	218 - 16
ZB75B	♦SCN	218 - 3
ZB82	♦SCN	218 -181
ZB82A	♦SCN	218 -195
ZB82B	MAL	218 -182
	SCN	
ZB91	♦SCN	219 -161
ZB91A	♦SCN	219 -174
ZB91B	♦SCN	219 -162
ZB100	♦SCN	220 -121
ZB100A	♦SCN	220 -136
ZB100B	MAL	220 -122
	♦SCN	
ZB110	♦SCN	221 - 84
ZB110A	♦SCN	221 - 98
ZB110B	MAL	221 - 85
	♦SCN	
ZB120	♦SCN	222 - 34
ZB120A	♦SCN	222 - 50
ZB120B	♦SCN	222 - 35
ZB130	♦SCN	222 -179
ZB130A	♦SCN	223 - 5
ZB130B	MAL	222 -180
	♦SCN	
ZB150	♦SCN	224 - 23
ZB150A	♦SCN	224 - 38
ZB150B	MAL	224 - 24
	♦SCN	
ZB160	♦SCN	224 -155
ZB160A	♦SCN	224 -168
ZB160B	♦SCN	224 -156
ZB180	♦SCN	225 -161
ZB180A	♦SCN	225 -177
ZB180B	MAL	225 -162
	♦SCN	
ZB200	♦SCN	226 -165
ZB200A	♦SCN	226 -179
ZB200B	♦SCN	226 -166
ZBC3.3	♦SCN	166 -103
ZBC3.3A	♦SCN	166 -102
ZBC3.3B	♦SCN	166 -100
ZBC3.6	♦SCN	167 - 74
ZBC3.6A	♦SCN	167 - 72
ZBC3.6B	♦SCN	167 - 69
ZBC3.9	♦SCN	168 - 59
ZBC3.9A	♦SCN	168 - 57
ZBC3.9B	♦SCN	168 - 54
ZBC4.3	♦SCN	169 - 79
ZBC4.3A	♦SCN	169 - 77
ZBC4.3B	♦SCN	169 - 74
ZBC4.7	♦SCN	170 -136
ZBC4.7A	♦SCN	170 -134
ZBC4.7B	♦SCN	170 -131
ZBC5.1	♦SCN	172 - 9
ZBC5.1A	♦SCN	172 - 7
ZBC5.1B	♦SCN	172 - 4
ZBC5.6	♦SCN	173 -107
ZBC5.6A	♦SCN	173 -105
ZBC5.6B	♦SCN	173 -102
ZBC6.2	♦SCN	175 -172
ZBC6.2A	♦SCN	175 -170
ZBC6.2B	♦SCN	175 -167
ZBC6.8	♦SCN	178 -172
ZBC6.8A	♦SCN	178 -176
ZBC6.8B	♦SCN	178 -173
ZBC7.5	♦SCN	180 -164
ZBC7.5A	♦SCN	180 -168
ZBC7.5B	♦SCN	180 -165
ZBC8.2	♦SCN	182 -153
ZBC8.2A	♦SCN	182 -157
ZBC8.2B	♦SCN	182 -154
ZBC9.1	♦SCN	185 -188
ZBC9.1A	♦SCN	185 -192
ZBC9.1B	♦SCN	185 -189
ZBC10	♦SCN	188 - 52
ZBC10A	♦SCN	188 - 56
ZBC10B	♦SCN	188 - 53
ZBC11	♦SCN	189 -165
ZBC11A	♦SCN	189 -169
ZBC11B	♦SCN	189 -166
ZBC12	♦SCN	191 -140
ZBC12A	♦SCN	191 -144
ZBC12B	♦SCN	191 -141
ZBC13	♦SCN	193 - 82
ZBC13A	♦SCN	193 - 86
ZBC13B	♦SCN	193 - 83
ZBC14	♦SCN	194 - 26
ZBC14A	♦SCN	194 - 30
ZBC14B	♦SCN	194 - 27

TYPE No.	MFRS	Pg&Line
ZBC15	♦SCN	195 -137
ZBC15A	♦SCN	195 -141
ZBC15B	♦SCN	195 -138
ZBC17	♦SCN	197 -142
ZBC17A	♦SCN	197 -145
ZBC17B	♦SCN	197 -143
ZBC18	♦SCN	199 - 35
ZBC18A	♦SCN	199 - 39
ZBC18B	♦SCN	199 - 36
ZBC19	♦SCN	199 -145
ZBC19A	♦SCN	199 -148
ZBC19B	♦SCN	199 -146
ZBC20	♦SCN	201 - 28
ZBC20A	♦SCN	201 - 32
ZBC20B	♦SCN	201 - 29
ZBC22	♦SCN	202 -135
ZBC22A	♦SCN	202 -139
ZBC22B	♦SCN	202 -136
ZBC24	♦SCN	204 - 21
ZBC24A	♦SCN	204 - 25
ZBC24B	♦SCN	204 - 22
ZBC25	♦SCN	204 -122
ZBC25A	♦SCN	204 -124
ZBC25B	♦SCN	204 -123
ZBC27	♦SCN	205 -175
ZBC27A	♦SCN	205 -179
ZBC27B	♦SCN	205 -176
ZBC30	♦SCN	207 - 99
ZBC30A	♦SCN	207 -103
ZBC30B	♦SCN	207 -100
ZBC33	♦SCN	208 -192
ZBC33A	♦SCN	208 -196
ZBC33B	♦SCN	208 -193
ZBC36	♦SCN	210 - 41
ZBC36A	♦SCN	210 - 45
ZBC36B	♦SCN	210 - 42
ZBC39	♦SCN	211 - 78
ZBC39A	♦SCN	211 - 82
ZBC39B	♦SCN	211 - 79
ZBC43	♦SCN	212 - 89
ZBC43A	♦SCN	212 - 93
ZBC43B	♦SCN	212 - 90
ZBC45	♦SCN	212 -133
ZBC45A	♦SCN	212 -135
ZBC45B	♦SCN	212 -134
ZBC47	♦SCN	213 -106
ZBC47A	♦SCN	213 -110
ZBC47B	♦SCN	213 -107
ZBC50	♦SCN	213 -156
ZBC50A	♦SCN	213 -158
ZBC50B	♦SCN	213 -157
ZBC51	♦SCN	214 -101
ZBC51A	♦SCN	214 -105
ZBC51B	♦SCN	214 -102
ZBC52	♦SCN	214 -139
ZBC52A	♦SCN	214 -141
ZBC52B	♦SCN	214 -140
ZBC56	♦SCN	215 - 90
ZBC56A	♦SCN	215 - 94
ZBC56B	♦SCN	215 - 91
ZBC62	♦SCN	216 - 94
ZBC62A	♦SCN	216 - 98
ZBC62B	♦SCN	216 - 95
ZBC68	♦SCN	217 - 75
ZBC68A	♦SCN	217 - 79
ZBC68B	♦SCN	217 - 76
ZBC75	♦SCN	218 - 58
ZBC75A	♦SCN	218 - 62
ZBC75B	♦SCN	218 - 59
ZBC82	♦SCN	219 - 34
ZBC82A	♦SCN	219 - 38
ZBC82B	♦SCN	219 - 35
ZBC91	♦SCN	220 - 13
ZBC91A	♦SCN	220 - 17
ZBC91B	♦SCN	220 - 14
ZBC100	♦SCN	220 -175
ZBC100A	♦SCN	220 -179
ZBC100B	♦SCN	220 -176
ZBC105	♦SCN	221 - 26
ZBC105A	♦SCN	221 - 28
ZBC105B	♦SCN	221 - 27
ZBC110	♦SCN	221 -135
ZBC110A	♦SCN	221 -139
ZBC110B	♦SCN	221 -136
ZBC120	♦SCN	222 - 89
ZBC120A	♦SCN	222 - 93
ZBC120B	♦SCN	222 - 90
ZBC130	♦SCN	223 - 40
ZBC130A	♦SCN	223 - 44
ZBC130B	♦SCN	223 - 41
ZBC140	♦SCN	223 -111
ZBC140A	♦SCN	223 -114
ZBC140B	♦SCN	223 -112
ZBC150	♦SCN	224 - 74
ZBC150A	♦SCN	224 - 78
ZBC150B	♦SCN	224 - 75
ZBC160	♦SCN	225 - 13
ZBC160A	♦SCN	225 - 17
ZBC160B	♦SCN	225 - 14
ZBC180	♦SCN	226 - 35
ZBC180A	♦SCN	226 - 39
ZBC180B	♦SCN	226 - 36
ZBC200	♦SCN	227 - 28
ZBC200A	♦SCN	227 - 32
ZBC200B	♦SCN	227 - 29
ZC3.3	♦SCN	377 - 53
ZC3.3A	♦SCN	377 - 51
ZC3.3B	♦SCN	377 - 49
ZC3.6	♦SCN	377 - 75
ZC3.6A	♦SCN	377 - 73
ZC3.6B	♦SCN	377 - 71
ZC3.9	♦SCN	377 - 98
ZC3.9A	♦SCN	377 - 96
ZC3.9B	♦SCN	377 - 94

TYPE No.	MFRS	Pg&Line
ZC4.3	♦SCN	377 -138
ZC4.3A	♦SCN	377 -136
ZC4.3B	♦SCN	377 -134
ZC4.7	♦SCN	378 - 17
ZC4.7A	♦SCN	378 - 15
ZC4.7B	♦SCN	378 - 13
ZC5.1	♦SCN	378 - 64
ZC5.1A	♦SCN	378 - 62
ZC5.1B	♦SCN	378 - 60
ZC5.6	♦SCN	378 -104
ZC5.6A	♦SCN	378 -102
ZC5.6B	♦SCN	378 -100
ZC6.2	♦SCN	378 -159
ZC6.2A	♦SCN	378 -157
ZC6.2B	♦SCN	378 -155
ZC6.8	♦SCN	379 - 22
ZC6.8A	♦SCN	379 - 30
ZC6.8B	♦SCN	379 - 23
ZC7.5	♦SCN	379 -135
ZC7.5A	♦SCN	379 -144
ZC7.5B	♦SCN	379 -136
ZC8.2	♦SCN	380 - 56
ZC8.2A	♦SCN	380 - 66
ZC8.2B	♦SCN	380 - 57
ZC9.1	♦SCN	380 -184
ZC9.1A	♦SCN	380 -194
ZC9.1B	♦SCN	380 -185
ZC10	♦SCN	381 - 83
ZC10A	♦SCN	381 - 92
ZC10B	♦SCN	381 - 84
ZC11	♦SCN	381 -190
ZC11A	♦SCN	381 -194
ZC11B	♦SCN	381 -191
ZC12	♦SCN	382 - 91
ZC12A	♦SCN	382 -101
ZC12B	♦SCN	382 - 92
ZC13	♦SCN	383 - 7
ZC13A	♦SCN	383 - 16
ZC13B	♦SCN	383 - 8
ZC14	♦SCN	383 -102
ZC14A	♦SCN	383 -108
ZC14B	♦SCN	383 -103
ZC15	♦SCN	383 -171
ZC15A	♦SCN	383 -181
ZC15B	♦SCN	383 -172
ZC17	♦SCN	384 -174
ZC17A	♦SCN	384 -177
ZC17B	♦SCN	384 -175
ZC18	♦SCN	385 - 37
ZC18A	♦SCN	385 - 47
ZC18B	♦SCN	385 - 38
ZC19	♦SCN	385 -139
ZC19A	♦SCN	385 -142
ZC19B	♦SCN	385 -140
ZC20	♦SCN	385 -191
ZC20A	♦SCN	385 -201
ZC20B	♦SCN	385 -192
ZC22	♦SCN	386 - 95
ZC22A	♦SCN	386 -104
ZC22B	♦SCN	386 - 96
ZC24	♦SCN	387 - 12
ZC24A	♦SCN	387 - 22
ZC24B	♦SCN	387 - 13
ZC25	♦SCN	387 -106
ZC25A	♦SCN	387 -109
ZC25B	♦SCN	387 -107
ZC27	♦SCN	387 -150
ZC27A	♦SCN	387 -160
ZC27B	♦SCN	387 -151
ZC30#B	♦SCN	388 - 70
ZC30A	♦SCN	388 - 80
ZC30B	♦SCN	388 - 71
ZC33	♦SCN	388 -175
ZC33A	♦SCN	388 -185
ZC33B	♦SCN	388 -176
ZC36	♦SCN	389 - 89
ZC36A	♦SCN	389 - 99
ZC36B	♦SCN	389 - 90
ZC39	♦SCN	389 -189
ZC39A	♦SCN	389 -195
ZC39B	♦SCN	389 -190
ZC43	♦SCN	390 -100
ZC43A	♦SCN	390 -107
ZC43B	♦SCN	390 -101
ZC45	♦SCN	390 -180
ZC45A	♦SCN	390 -186
ZC45B	♦SCN	390 -181
ZC47	♦SCN	391 - 32
ZC47A	♦SCN	391 - 39
ZC47B	♦SCN	391 - 33
ZC50	♦SCN	391 -119
ZC50A	♦SCN	391 -124
ZC50B	♦SCN	391 -120
ZC51	♦SCN	391 -170
ZC51A	♦SCN	391 -177
ZC51B	♦SCN	391 -171
ZC52	♦SCN	392 - 40
ZC52A	♦SCN	392 - 42
ZC52B	♦SCN	392 - 41
ZC56	♦SCN	392 - 81
ZC56A	♦SCN	392 - 90
ZC56B	♦SCN	392 - 82
ZC62	♦SCN	393 - 5
ZC62A	♦SCN	393 - 11
ZC62B	♦SCN	393 - 6
ZC68	♦SCN	393 - 94
ZC68A	♦SCN	393 -101
ZC68B	♦SCN	393 - 95
ZC75	♦SCN	394 - 10
ZC75A	♦SCN	394 - 19
ZC75B	♦SCN	394 - 11
ZC82	♦SCN	394 -122
ZC82A	♦SCN	394 -129
ZC82B	♦SCN	394 -123

Δ-Registered with JEDEC by this manufacturer

♦-Mfr's data sheet available in microfilm service

1. TYPE No. CROSS INDEX

IN TYPE NUMBER SEQUENCE

TYPE No.	MFRS	Pg&Line
ZC91	♦SCN	395 - 33
ZC91A	♦SCN	395 - 40
ZC91B	♦SCN	395 - 34
ZC100	♦SCN	395 -127
ZC100A	♦SCN	395 -137
ZC100B	♦SCN	395 -128
ZC105	♦SCN	396 - 21
ZC105A	♦SCN	396 - 23
ZC105B	♦SCN	396 - 22
ZC110	♦FERB	396 - 60
	♦SCN	
ZC110A	♦SCN	396 - 65
ZC110B	♦SCN	396 - 66
ZC120	♦SCN	396 -146
ZC120A	♦SCN	396 -152
ZC120B	♦SCN	396 -147
ZC130	♦SCN	397 - 35
ZC130A	♦SCN	397 - 41
ZC130B	♦SCN	397 - 36
ZC140	♦SCN	397 -118
ZC140A	♦SCN	397 -123
ZC140B	♦SCN	397 -119
ZC150	FERB	397 -172
	♦SCN	
ZC150A	♦SCN	397 -178
ZC150B	♦SCN	397 -173
ZC160	♦SCN	398 - 62
ZC160A	♦SCN	398 - 68
ZC160B	♦SCN	398 - 63
ZC180	♦SCN	398 -175
ZC180A	♦SCN	398 -181
ZC180B	♦SCN	398 -176
ZC200#B	♦SCN	399 - 83
ZC200A	♦SCN	399 - 90
ZC200B	♦SCN	399 - 84
ZC708	♦LUCB	380 -137
ZC709	♦LUCB	381 - 58
ZC710	♦LUCB	381 -168
ZC711	♦LUCB	382 - 55
ZC712	♦LUCB	382 -179
ZC713	♦LUCB	383 - 85
ZC715	♦LUCB	384 - 65
ZC716	♦LUCB	384 -161
ZC718	♦LUCB	385 -127
ZC720	♦LUCB	386 - 73
ZC722	♦LUCB	386 -181
ZC724	♦LUCB	387 - 93
ZC727	♦LUCB	388 - 36
ZC730	♦LUCB	388 -151
ZC733	♦LUCB	389 - 61
ZC736	♦LUCB	389 -169
ZC739	♦LUCB	390 - 61
ZC743	♦LUCB	390 -166
ZC747	♦LUCB	391 -103
ZC751	♦LUCB	392 - 32
ZC756	♦LUCB	392 -160
ZC762	♦LUCB	393 - 72
ZC768	♦LUCB	393 -166
ZC775	♦LUCB	394 - 88
ZC782	♦LUCB	394 -190
ZC791	♦LUCB	395 - 99
ZC799	♦LUCB	396 - 11
ZC2800	♦FERB	437 - 26
ZC2800E	♦FERB	437 - 27
ZC2800H	♦FERB	437 - 28
ZC2810	♦FERB	437 - 29
ZC2810E	♦FERB	437 - 30
ZC2810H	♦FERB	437 - 31
ZC2811	♦FERB	437 - 32
ZC2811E	♦FERB	437 - 33
ZC2811H	♦FERB	437 - 34
ZC5800	♦FERB	437 - 35
ZC5800E	♦FERB	437 - 36
ZC5800H	♦FERB	437 - 37
ZCC3.3	♦SCN	166 -110
ZCC3.3A	♦SCN	166 -109
ZCC3.3B	♦SCN	166 -108
ZCC3.6	♦SCN	167 - 81
ZCC3.6A	♦SCN	167 - 80
ZCC3.6B	♦SCN	167 - 79
ZCC3.9	♦SCN	168 - 73
ZCC3.9A	♦SCN	168 - 71
ZCC3.9B	♦SCN	168 - 69
ZCC4.3	♦SCN	169 - 93
ZCC4.3A	♦SCN	169 - 91
ZCC4.3B	♦SCN	169 - 89
ZCC4.7	♦SCN	170 -150
ZCC4.7A	♦SCN	170 -148
ZCC4.7B	♦SCN	170 -146
ZCC5.1	♦SCN	172 - 24
ZCC5.1A	♦SCN	172 - 22
ZCC5.1B	♦SCN	172 - 20
ZCC5.6	♦SCN	173 -122
ZCC5.6A	♦SCN	173 -120
ZCC5.6B	♦SCN	173 -118
ZCC6.2	♦SCN	175 -187
ZCC6.2A	♦SCN	175 -185
ZCC6.2B	♦SCN	175 -183
ZCC6.8	♦SCN	178 -191
ZCC6.8A	♦SCN	178 -196
ZCC6.8B	♦SCN	178 -192
ZCC7.5	♦SCN	180 -185
ZCC7.5A	♦SCN	180 -190
ZCC7.5B	♦SCN	180 -186
ZCC8.2	♦SCN	182 -175
ZCC8.2A	♦SCN	182 -180
ZCC8.2B	♦SCN	182 -176
ZCC9.1	♦SCN	186 - 6
ZCC9.1A	♦SCN	186 - 11
ZCC9.1B	♦SCN	186 - 7
ZCC10	♦SCN	188 - 75
ZCC10A	♦SCN	188 - 80
ZCC10B	♦SCN	188 - 76
ZCC11	♦SCN	189 -186

TYPE No.	MFRS	Pg&Line
ZCC11A	♦SCN	189 -190
ZCC11B	♦SCN	189 -187
ZCC12	♦SCN	191 -163
ZCC12A	♦SCN	191 -168
ZCC12B	♦SCN	191 -164
ZCC13	♦SCN	193 -103
ZCC13A	♦SCN	193 -108
ZCC13B	♦SCN	193 -104
ZCC14	♦SCN	194 - 42
ZCC14A	♦SCN	194 - 47
ZCC14B	♦SCN	194 - 43
ZCC15	♦SCN	195 -159
ZCC15A	♦SCN	195 -164
ZCC15B	♦SCN	195 -160
ZCC17	♦SCN	197 -154
ZCC17A	♦SCN	197 -157
ZCC17B	♦SCN	197 -155
ZCC18	♦SCN	199 - 58
ZCC18A	♦SCN	199 - 64
ZCC18B	♦SCN	199 - 59
ZCC19	♦SCN	199 -158
ZCC19A	♦SCN	199 -161
ZCC19B	♦SCN	199 -159
ZCC20	♦SCN	201 - 51
ZCC20A	♦SCN	201 - 57
ZCC20B	♦SCN	201 - 52
ZCC22	♦SCN	202 -156
ZCC22A	♦SCN	202 -161
ZCC22B	♦SCN	202 -157
ZCC24	♦SCN	204 - 44
ZCC24A	♦SCN	204 - 49
ZCC24B	♦SCN	204 - 45
ZCC25	♦SCN	204 -127
ZCC25A	♦SCN	204 -129
ZCC25B	♦SCN	204 -128
ZCC27	♦SCN	205 -199
ZCC27A	♦SCN	205 -205
ZCC27B	♦SCN	205 -200
ZCC30	♦SCN	207 -124
ZCC30A	♦SCN	207 -129
ZCC30B	♦SCN	207 -125
ZCC33	♦SCN	209 - 10
ZCC33A	♦SCN	209 - 16
ZCC33B	♦SCN	209 - 11
ZCC36	♦SCN	210 - 64
ZCC36A	♦SCN	210 - 70
ZCC36B	♦SCN	210 - 65
ZCC39	♦SCN	211 - 99
ZCC39A	♦SCN	211 -103
ZCC39B	♦SCN	211 -100
ZCC43	♦SCN	212 -110
ZCC43A	♦SCN	212 -114
ZCC43B	♦SCN	212 -111
ZCC45	♦SCN	212 -142
ZCC45A	♦SCN	212 -146
ZCC45B	♦SCN	212 -143
ZCC47	♦SCN	213 -127
ZCC47A	♦SCN	213 -131
ZCC47B	♦SCN	213 -128
ZCC50	♦SCN	213 -164
ZCC50A	♦SCN	213 -169
ZCC50B	♦SCN	213 -165
ZCC51	♦SCN	214 -122
ZCC51A	♦SCN	214 -126
ZCC51B	♦SCN	214 -123
ZCC52	♦SCN	214 -144
ZCC52A	♦SCN	214 -146
ZCC52B	♦SCN	214 -145
ZCC56	♦SCN	215 -112
ZCC56A	♦SCN	215 -117
ZCC56B	♦SCN	215 -113
ZCC62	♦SCN	216 -115
ZCC62A	♦SCN	216 -119
ZCC62B	♦SCN	216 -116
ZCC68	♦SCN	217 - 96
ZCC68A	♦SCN	217 -100
ZCC68B	♦SCN	217 - 97
ZCC75	♦SCN	218 - 80
ZCC75A	♦SCN	218 - 85
ZCC75B	♦SCN	218 - 81
ZCC82	♦SCN	219 - 53
ZCC82A	♦SCN	219 - 57
ZCC82B	♦SCN	219 - 54
ZCC91	♦SCN	220 - 32
ZCC91A	♦SCN	220 - 36
ZCC91B	♦SCN	220 - 33
ZCC100	♦SCN	220 -195
ZCC100A	♦SCN	221 - 3
ZCC100B	♦SCN	220 -196
ZCC105	♦SCN	221 - 29
ZCC105A	♦SCN	221 - 31
ZCC105B	♦SCN	221 - 30
ZCC110	♦SCN	221 -152
ZCC110A	♦SCN	221 -157
ZCC110B	♦SCN	221 -153
ZCC120	♦SCN	222 -108
ZCC120A	♦SCN	222 -114
ZCC120B	♦SCN	222 -109
ZCC130	♦SCN	223 - 59
ZCC130A	♦SCN	223 - 64
ZCC130B	♦SCN	223 - 60
ZCC140	♦SCN	223 -127
ZCC140A	♦SCN	223 -132
ZCC140B	♦SCN	223 -128
ZCC150	♦SCN	224 - 92
ZCC150A	♦SCN	224 - 97
ZCC150B	♦SCN	224 - 93
ZCC160	♦SCN	225 - 30
ZCC160A	♦SCN	225 - 35
ZCC160B	♦SCN	225 - 31
ZCC180	♦SCN	226 - 52
ZCC180A	♦SCN	226 - 58
ZCC180B	♦SCN	226 - 53
ZCC200	♦SCN	227 - 47

TYPE No.	MFRS	Pg&Line
ZCC200A	♦SCN	227 - 53
ZCC200B	♦SCN	227 - 48
ZD3.9	♦ITTG	168 - 42
ZD4.3	♦ITTG	169 - 60
ZD4.7	♦ITTG	170 -116
ZD5.1	♦ITTG	171 -198
ZD5.6	♦ITTG	173 - 86
ZD6.2	♦ITTG	175 -149
ZD6.8	♦ITTG	178 -150
ZD7.5	♦ITTG	180 -142
ZD8.2	♦ITTG	182 -131
ZD9.1	♦ITTG	185 -163
ZD10	♦ITTG	188 - 23
ZD11	♦ITTG	189 -139
ZD12	♦ITTG	191 -115
ZD13	♦ITTG	193 - 58
ZD15	♦ITTG	195 -111
ZD16	♦ITTG	196 -202
ZD18	♦ITTG	199 - 10
ZD20	♦ITTG	201 - 1
ZD22	♦ITTG	202 -111
ZD24	♦ITTG	203 -206
ZD27	♦ITTG	205 -147
ZD30	♦ITTG	207 - 71
ZD33	♦ITTG	208 -164
ZD36	♦ITTG	210 - 15
ZD39	♦ITTG	211 - 54
ZD43	♦ITTG	212 - 61
ZD47	♦ITTG	213 - 78
ZD51	♦ITTG	214 - 73
ZD56	♦ITTG	215 - 64
ZD62	♦ITTG	216 - 68
ZD68	♦ITTG	217 - 49
ZD75	♦ITTG	218 - 32
ZD82	♦ITTG	219 - 10
ZD91	♦ITTG	219 -188
ZD100	♦ITTG	220 -150
ZD110	♦ITTG	221 -114
ZD120	♦ITTG	222 - 66
ZD130	♦ITTG	223 - 21
ZD150	♦ITTG	224 - 53
ZD160	♦ITTG	224 -181
ZD180	♦ITTG	226 - 9
ZD200	♦ITTG	227 - 5
ZDX1F	♦FERB	435 - 78
ZDX1R	♦FERB	435 - 79
ZDX2F	♦FERB	435 - 80
ZDX2R	♦FERB	435 - 81
ZDX3F	♦FERB	435 - 82
ZDX3R	♦FERB	435 - 83
ZDX4F	♦FERB	435 - 84
ZDX4R	♦FERB	435 - 85
ZDX5	♦FERB	435 - 86
ZDX6	♦FERB	435 - 87
ZGP10-100	GIC	396 - 12
ZGP10-110	GIC	396 -127
ZGP10-120	GIC	397 - 17
ZGP10-130	GIC	397 -103
ZGP10-140	GIC	397 -156
ZGP10-150	GIC	398 - 46
ZGP10-160	♦GIC	225 - 8
ZGP10-160A	GIC	225 - 4
ZGP10-160B	GIC	224 -190
ZGP10-170	♦GIC	225 - 81
ZGP10-170A	GIC	225 - 79
ZGP10-170B	GIC	225 - 77
ZGP10-180	♦GIC	226 - 30
ZGP10-180A	GIC	226 - 26
ZGP10-180B	GIC	226 - 22
ZGP10-190	♦GIC	226 - 94
ZGP10-190A	GIC	226 - 93
ZGP10-190B	GIC	226 - 91
ZGP10-200	♦GIC	227 - 23
ZGP10-200A	GIC	227 - 20
ZGP10-200B	GIC	227 - 16
ZJ4B41	TOSJ	362 -141
ZM4729	♦ITTG	167 - 55
ZM4729A	♦ITTG	167 - 50
ZM4730	♦ITTG	168 - 36
ZM4730A	♦ITTG	168 - 29
ZM4731	♦ITTG	169 - 56
ZM4731A	♦ITTG	169 - 51
ZM4732	♦ITTG	170 -112
ZM4732A	♦ITTG	170 -105
ZM4733	♦ITTG	171 -193
ZM4733A	♦ITTG	171 -188
ZM4734	♦ITTG	173 - 81
ZM4734A	♦ITTG	173 - 73
ZM4735	♦ITTG	175 -144
ZM4735A	♦ITTG	175 -136
ZM4736	♦ITTG	178 -140
ZM4736A	♦ITTG	178 -124
ZM4737	♦ITTG	180 -132
ZM4737A	♦ITTG	180 -116
ZM4738	♦ITTG	182 -121
ZM4738A	♦ITTG	182 -101
ZM4739	♦ITTG	185 -149
ZM4739A	♦ITTG	185 -134
ZM4740	♦ITTG	188 - 8
ZM4740A	♦ITTG	187 -195
ZM4741	♦ITTG	189 -122
ZM4741A	♦ITTG	189 -106
ZM4742	♦ITTG	191 - 97
ZM4742A	♦ITTG	191 - 76
ZM4743	♦ITTG	193 - 41
ZM4743A	♦ITTG	193 - 24
ZM4744	♦ITTG	195 - 96
ZM4744A	♦ITTG	195 - 74
ZM4745	♦ITTG	196 -185
ZM4745A	♦ITTG	196 -167
ZM4746	♦ITTG	198 -204
ZM4746A	♦ITTG	198 -183
ZM4747	♦ITTG	200 -194
ZM4747A	♦ITTG	200 -173

TYPE No.	MFRS	Pg&Line
ZM4748	♦ITTG	202 - 94
ZM4748A	♦ITTG	202 - 74
ZM4749	♦ITTG	203 -189
ZM4749A	♦ITTG	203 -172
ZM4750	♦ITTG	205 -132
ZM4750A	♦ITTG	205 -110
ZM4751	♦ITTG	207 - 56
ZM4751A	♦ITTG	207 - 35
ZM4752	♦ITTG	208 -149
ZM4752A	♦ITTG	208 -129
ZMM1	♦ITTG	163 - 39
ZMM2.7	♦ITTG	164 -176
ZMM3	♦ITTG	165 -114
ZMM3.3	♦ITTG	166 - 49
ZMM3.6	♦ITTG	167 - 9
ZMM3.9	♦ITTG	167 -186
ZMM4.3	♦ITTG	169 - 3
ZMM4.7	♦ITTG	170 - 49
ZMM5.1	♦ITTG	171 -131
ZMM5.6	♦ITTG	173 - 9
ZMM6.2	♦ITTG	175 - 74
ZMM6.8	♦ITTG	178 - 43
ZMM7.5	♦ITTG	180 - 36
ZMM8.2	♦ITTG	182 - 20
ZMM9.1	♦ITTG	185 - 51
ZMM10	♦ITTG	187 -102
ZMM11	♦ITTG	189 - 37
ZMM12	♦ITTG	191 - 1
ZMM13	♦ITTG	192 -178
ZMM15	♦ITTG	194 -198
ZMM16	♦ITTG	196 -104
ZMM18	♦ITTG	198 -112
ZMM20	♦ITTG	200 -111
ZMM22	♦ITTG	202 - 8
ZMM24	♦ITTG	203 -109
ZMM27	♦ITTG	205 - 44
ZMM30	♦ITTG	206 -179
ZMM33	♦ITTG	208 - 68
ZMM36	♦ITTG	209 -140
ZMM39	♦ITTG	210 -176
ZMM43	♦ITTG	211 -195
ZMM47	♦ITTG	213 - 4
ZMM51	♦ITTG	214 - 10
ZMM746	♦ITTG	166 - 23
ZMM746A	♦ITTG	166 - 16
ZMM747	♦ITTG	166 -199
ZMM747A	♦ITTG	166 -193
ZMM748	♦ITTG	167 -164
ZMM748A	♦ITTG	167 -158
ZMM749	♦ITTG	168 -183
ZMM749A	♦ITTG	168 -176
ZMM750	♦ITTG	170 - 22
ZMM750A	♦ITTG	170 - 13
ZMM751	♦ITTG	171 -104
ZMM751A	♦ITTG	171 - 96
ZMM752	♦ITTG	172 -193
ZMM752A	♦ITTG	172 -184
ZMM753	♦ITTG	175 - 45
ZMM753A	♦ITTG	174 -213
ZMM754	♦ITTG	178 - 13
ZMM754A	♦ITTG	178 - 5
ZMM755	♦ITTG	180 - 11
ZMM755A	♦ITTG	180 - 4
ZMM756	♦ITTG	181 -195
ZMM756A	♦ITTG	181 -187
ZMM757	♦ITTG	185 - 25
ZMM757A	♦ITTG	185 - 19
ZMM758	♦ITTG	187 - 70
ZMM758A	♦ITTG	187 - 63
ZMM759	♦ITTG	190 -182
ZMM759A	♦ITTG	190 -175
ZMM5226	♦ITTG	166 - 63
ZMM5226A	♦ITTG	166 - 58
ZMM5226B	♦ITTG	166 - 44
ZMM5227	♦ITTG	167 - 27
ZMM5227A	♦ITTG	167 - 22
ZMM5227B	♦ITTG	167 - 10
ZMM5228	♦ITTG	167 -204
ZMM5228A	♦ITTG	167 -199
ZMM5228B	♦ITTG	167 -187
ZMM5229	♦ITTG	169 - 18
ZMM5229A	♦ITTG	169 - 13
ZMM5229B	♦ITTG	168 -210
ZMM5230	♦ITTG	170 - 65
ZMM5230A	♦ITTG	170 - 60
ZMM5230B	♦ITTG	170 - 45
ZMM5231	♦ITTG	171 -145
ZMM5231A	♦ITTG	171 -140
ZMM5231B	♦ITTG	171 -126
ZMM5232	♦ITTG	173 - 25
ZMM5232A	♦ITTG	173 - 20
ZMM5232B	♦ITTG	173 - 4
ZMM5233	♦ITTG	174 - 15
ZMM5233A	♦ITTG	174 - 11
ZMM5233B	♦ITTG	174 - 6
ZMM5234	♦ITTG	175 - 89
ZMM5234A	♦ITTG	175 - 84
ZMM5234B	♦ITTG	175 - 69
ZMM5235	♦ITTG	178 - 60
ZMM5235A	♦ITTG	178 - 55
ZMM5235B	♦ITTG	178 - 38
ZMM5236	♦ITTG	180 - 56
ZMM5236A	♦ITTG	180 - 52
ZMM5236B	♦ITTG	180 - 37
ZMM5237	♦ITTG	182 - 38
ZMM5237A	♦ITTG	182 - 33
ZMM5237B	♦ITTG	182 - 15
ZMM5238	♦ITTG	183 -183
ZMM5238A	♦ITTG	183 -180
ZMM5238B	♦ITTG	183 -176
ZMM5239	♦ITTG	185 - 74
ZMM5239A	♦ITTG	185 - 68
ZMM5239B	♦ITTG	185 - 52
ZMM5240	♦ITTG	187 -121

TYPE No.	MFRS	Pg&Line
ZMM5240A	♦ITTG	187 -115
ZMM5240B	♦ITTG	187 - 97
ZMM5241	♦ITTG	189 - 58
ZMM5241A	♦ITTG	189 - 52
ZMM5241B	♦ITTG	189 - 38
ZMM5242	♦ITTG	191 - 17
ZMM5242A	♦ITTG	191 - 11
ZMM5242B	♦ITTG	190 -209
ZMM5243	♦ITTG	192 -192
ZMM5243A	♦ITTG	192 -186
ZMM5243B	♦ITTG	192 -174
ZMM5244	♦ITTG	194 - 3
ZMM5244A	♦ITTG	193 -198
ZMM5244B	♦ITTG	193 -191
ZMM5245	♦ITTG	195 - 21
ZMM5245A	♦ITTG	195 - 14
ZMM5245B	♦ITTG	194 -194
ZMM5246	♦ITTG	196 -123
ZMM5246A	♦ITTG	196 -117
ZMM5246B	♦ITTG	196 -105
ZMM5247	♦ITTG	197 -127
ZMM5247A	♦ITTG	197 -122
ZMM5247B	♦ITTG	197 -115
ZMM5248	♦ITTG	198 -132
ZMM5248A	♦ITTG	198 -126
ZMM5248B	♦ITTG	198 -108
ZMM5249	♦ITTG	199 -137
ZMM5249A	♦ITTG	199 -134
ZMM5249B	♦ITTG	199 -129
ZMM5250	♦ITTG	200 -129
ZMM5250A	♦ITTG	200 -123
ZMM5250B	♦ITTG	200 -107
ZMM5251	♦ITTG	202 - 24
ZMM5251A	♦ITTG	202 - 18
ZMM5251B	♦ITTG	202 - 3
ZMM5252	♦ITTG	203 -128
ZMM5252A	♦ITTG	203 -122
ZMM5252B	♦ITTG	203 -110
ZMM5253	♦ITTG	204 -116
ZMM5253A	♦ITTG	204 -113
ZMM5253B	♦ITTG	204 -108
ZMM5254	♦ITTG	205 - 62
ZMM5254A	♦ITTG	205 - 56
ZMM5254B	♦ITTG	205 - 41
ZMM5255	♦ITTG	206 - 51
ZMM5255A	♦ITTG	206 - 48
ZMM5255B	♦ITTG	206 - 43
ZMM5256	♦ITTG	206 -199
ZMM5256A	♦ITTG	206 -192
ZMM5256B	♦ITTG	206 -177
ZMM5257	♦ITTG	208 - 86
ZMM5257A	♦ITTG	208 - 80
ZMM5257B	♦ITTG	208 - 65
ZMU100	♦ITTG	220 - 48
ZMU120	♦ITTG	222 - 69
ZMU150	♦ITTG	223 -151
ZMU180	♦ITTG	226 - 13
ZMY1	♦ITTG	163 - 35
ZMY3.9	♦ITTG	168 - 43
ZMY4.3	♦ITTG	169 - 64
ZMY4.7	♦ITTG	170 -120
ZMY5.1	♦ITTG	171 -202
ZMY5.6	♦ITTG	173 - 90
ZMY6.2	♦ITTG	175 -153
ZMY6.8	♦ITTG	178 -154
ZMY7.5	♦ITTG	180 -144
ZMY8.2	♦ITTG	182 -135
ZMY9.1	♦ITTG	185 -165
ZMY10	♦ITTG	188 - 28
ZMY11	♦ITTG	189 -142
ZMY12	♦ITTG	191 -117
ZMY13	♦ITTG	193 -129
ZMY15	♦ITTG	194 - 97
ZMY16	♦ITTG	197 - 65
ZMY18	♦ITTG	198 - 4
ZMY20	♦ITTG	200 - 5
ZMY22	♦ITTG	202 -113
ZMY24	♦ITTG	204 - 74
ZMY27	♦ITTG	205 -151
ZMY30	♦ITTG	207 - 73
ZMY33	♦ITTG	208 -168
ZMY36	♦ITTG	210 - 19
ZMY39	♦ITTG	211 - 55
ZMY43	♦ITTG	212 - 65
ZMY47	♦ITTG	213 - 82
ZMY51	♦ITTG	214 - 78
ZMY56	♦ITTG	215 - 67
ZMY62	♦ITTG	216 - 71
ZMY68	♦ITTG	217 - 52
ZMY75	♦ITTG	218 - 33
ZMY82	♦ITTG	219 - 68
ZMY91	♦ITTG	219 -104
ZMY100	♦ITTG	220 -153
ZP1009	♦LUCB	355 - 72
ZP1009A	♦LUCB	355 - 73
ZP1010	♦LUCB	355 - 74
ZP1010A	♦LUCB	355 - 75
ZP1011	♦LUCB	355 - 76
ZP1011A	♦LUCB	355 - 77
ZP1012	♦LUCB	355 - 78
ZP1012A	♦LUCB	355 - 79
ZP1013	♦LUCB	355 - 80
ZP1013A	♦LUCB	355 - 81
ZP1015	♦LUCB	355 - 82
ZP1015A	♦LUCB	355 - 83
ZP1016	♦LUCB	355 - 84
ZP1016A	♦LUCB	355 - 85
ZP1018	♦LUCB	355 - 86
ZP1018A	♦LUCB	355 - 87
ZP1020	♦LUCB	355 - 88
ZP1020A	♦LUCB	355 - 89
ZP1022	♦LUCB	355 - 90
ZP1022A	♦LUCB	355 - 91
ZP1024	♦LUCB	355 - 92

Δ-Registered with JEDEC by this manufacturer

♦-Mfr's data sheet available in microfilm service

1. TYPE No. CROSS INDEX

IN TYPE NUMBER SEQUENCE

TYPE No.	MFRS	Pg&Line
ZP1024A	♦LUCB	355 - 93
ZP1027	♦LUCB	355 - 94
ZP1027A	♦LUCB	355 - 95
ZP1030	♦LUCB	355 - 96
ZP1030A	♦LUCB	355 - 97
ZP1033	♦LUCB	355 - 98
ZP1033A	♦LUCB	355 - 99
ZP1036	♦LUCB	355 -100
ZP1036A	♦LUCB	355 -101
ZP1039	♦LUCB	355 -102
ZP1039A	♦LUCB	355 -103
ZP1043A	♦LUCB	355 -104
ZP1047	♦LUCB	355 -105
ZP1047A	♦LUCB	355 -106
ZP1051	♦LUCB	355 -107
ZP1051A	♦LUCB	355 -108
ZP1056	♦LUCB	355 -109
ZP1056A	♦LUCB	355 -110
ZP1062	♦LUCB	356 - 1
ZP1062A	♦LUCB	356 - 2
ZP1068	♦LUCB	356 - 3
ZP1068A	♦LUCB	356 - 4
ZP1075	♦LUCB	356 - 5
ZP1075A	♦LUCB	356 - 6
ZP1082	♦LUCB	356 - 7
ZP1082A	♦LUCB	356 - 8
ZP1091	♦LUCB	356 - 9
ZP1091A	♦LUCB	356 - 10
ZP1100	♦LUCB	356 - 11
ZP1100A	♦LUCB	356 - 12
ZP1110	♦LUCB	356 - 13
ZP1110A	♦LUCB	356 - 14
ZP1120	♦LUCB	356 - 15
ZP1120A	♦LUCB	356 - 16
ZP1130	♦LUCB	356 - 17
ZP1130A	♦LUCB	356 - 18
ZP1140	♦LUCB	356 - 19
ZP1150	♦LUCB	356 - 20
ZP1150A	♦LUCB	356 - 21
ZP1160	♦LUCB	356 - 22
ZP1160A	♦LUCB	356 - 23
ZP1170	♦LUCB	356 - 24
ZP1170A	♦LUCB	356 - 25
ZP1180	♦LUCB	356 - 26
ZP1180A	♦LUCB	356 - 27
ZP1200	♦LUCB	356 - 28
ZP1200A	♦LUCB	356 - 29
ZP1220	♦LUCB	356 - 30
ZP1220A	♦LUCB	356 - 31
ZP1250	♦LUCB	356 - 32
ZP1250A	♦LUCB	356 - 33
ZP1275A	♦LUCB	356 - 34
ZP2009	♦LUCB	356 - 35
ZP2009A	♦LUCB	356 - 36
ZP2010	♦LUCB	356 - 37
ZP2010A	♦LUCB	356 - 38
ZP2011	♦LUCB	356 - 39
ZP2011A	♦LUCB	356 - 40
ZP2012A	♦LUCB	356 - 41
ZP2013	♦LUCB	356 - 42
ZP2013A	♦LUCB	356 - 43
ZP2015	♦LUCB	356 - 44
ZP2015A	♦LUCB	356 - 45
ZP2016	♦LUCB	356 - 46
ZP2016A	♦LUCB	356 - 47
ZP2018A	♦LUCB	356 - 48
ZP2020	♦LUCB	356 - 49
ZP2020A	♦LUCB	356 - 50
ZP2022	♦LUCB	356 - 51
ZP2022A	♦LUCB	356 - 52
ZP2024	♦LUCB	356 - 53
ZP2024A	♦LUCB	356 - 54
ZP2027A	♦LUCB	356 - 55
ZP2030	♦LUCB	356 - 56
ZP2030A	♦LUCB	356 - 57
ZP2033	♦LUCB	356 - 58
ZP2033A	♦LUCB	356 - 59
ZP2036A	♦LUCB	356 - 60
ZP2039	♦LUCB	356 - 61
ZP2039A	♦LUCB	356 - 62
ZP2043	♦LUCB	356 - 63
ZP2043A	♦LUCB	356 - 64
ZP2047	♦LUCB	356 - 65
ZP2047A	♦LUCB	356 - 66
ZP2051	♦LUCB	356 - 67
ZP2051A	♦LUCB	356 - 68
ZP2056A	♦LUCB	356 - 69
ZP2062A	♦LUCB	356 - 70
ZP2068A	♦LUCB	356 - 71
ZP2075	♦LUCB	356 - 72
ZP2075A	♦LUCB	356 - 73
ZP2082	♦LUCB	356 - 74
ZP2082A	♦LUCB	356 - 75
ZP2091	♦LUCB	356 - 76
ZP2091A	♦LUCB	356 - 77
ZP2100	♦LUCB	356 - 78
ZP2100A	♦LUCB	356 - 79
ZP2110	♦LUCB	356 - 80
ZP2110A	♦LUCB	356 - 81
ZP2120A	♦LUCB	356 - 82
ZP2130	♦LUCB	356 - 83
ZP2130A	♦LUCB	356 - 84
ZP2150	♦LUCB	356 - 85
ZP2150A	♦LUCB	356 - 86
ZP2160	♦LUCB	356 - 87
ZP2160A	♦LUCB	356 - 88
ZP2170	♦LUCB	356 - 89
ZP2170A	♦LUCB	356 - 90
ZP2180	♦LUCB	356 - 91
ZP2180A	♦LUCB	356 - 92
ZP2200	♦LUCB	356 - 93
ZP2200A	♦LUCB	356 - 94
ZP2220	♦LUCB	356 - 95
ZP2220A	♦LUCB	356 - 96
ZP2250	♦LUCB	356 - 97
ZP2250A	♦LUCB	356 - 98
ZP2275	♦LUCB	356 - 99
ZP2275A	♦LUCB	356 -100
ZP3009	♦LUCB	356 -101
ZP3009A	♦LUCB	356 -102
ZP3010	♦LUCB	356 -103
ZP3010A	♦LUCB	356 -104
ZP3011	♦LUCB	356 -105
ZP3011A	♦LUCB	356 -106
ZP3012	♦LUCB	356 -107
ZP3012A	♦LUCB	356 -108
ZP3013	♦LUCB	356 -109
ZP3013A	♦LUCB	356 -110
ZP3015	♦LUCB	357 - 1
ZP3015A	♦LUCB	357 - 2
ZP3016	♦LUCB	357 - 3
ZP3016A	♦LUCB	357 - 4
ZP3018	♦LUCB	357 - 5
ZP3018A	♦LUCB	357 - 6
ZP3020	♦LUCB	357 - 7
ZP3020A	♦LUCB	357 - 8
ZP3022	♦LUCB	357 - 9
ZP3022A	♦LUCB	357 - 10
ZP3024	♦LUCB	357 - 11
ZP3024A	♦LUCB	357 - 12
ZP3027	♦LUCB	357 - 13
ZP3027A	♦LUCB	357 - 14
ZP3030	♦LUCB	357 - 15
ZP3030A	♦LUCB	357 - 16
ZP3033	♦LUCB	357 - 17
ZP3033A	♦LUCB	357 - 18
ZP3036	♦LUCB	357 - 19
ZP3036A	♦LUCB	357 - 20
ZP3039	♦LUCB	357 - 21
ZP3039A	♦LUCB	357 - 22
ZP3043	♦LUCB	357 - 23
ZP3043A	♦LUCB	357 - 24
ZP3047	♦LUCB	357 - 25
ZP3047A	♦LUCB	357 - 26
ZP3051	♦LUCB	357 - 27
ZP3051A	♦LUCB	357 - 28
ZP3056	♦LUCB	357 - 29
ZP3056A	♦LUCB	357 - 30
ZP3062	♦LUCB	357 - 31
ZP3062A	♦LUCB	357 - 32
ZP3068	♦LUCB	357 - 33
ZP3068A	♦LUCB	357 - 34
ZP3091	♦LUCB	357 - 35
ZP3091A	♦LUCB	357 - 36
ZP3100	♦LUCB	357 - 37
ZP3100A	♦LUCB	357 - 38
ZP3110	♦LUCB	357 - 39
ZP3110A	♦LUCB	357 - 40
ZP3120	♦LUCB	357 - 41
ZP3120A	♦LUCB	357 - 42
ZP3130	♦LUCB	357 - 43
ZP3130A	♦LUCB	357 - 44
ZP3140	♦LUCB	357 - 45
ZP3150	♦LUCB	357 - 46
ZP3150A	♦LUCB	357 - 47
ZP3160	♦LUCB	357 - 48
ZP3160A	♦LUCB	357 - 49
ZP3170	♦LUCB	357 - 50
ZP3170A	♦LUCB	357 - 51
ZP3180	♦LUCB	357 - 52
ZP3180A	♦LUCB	357 - 53
ZP3200	♦LUCB	357 - 54
ZP3200A	♦LUCB	357 - 55
ZP3220	♦LUCB	357 - 56
ZP3220A	♦LUCB	357 - 57
ZP3250	♦LUCB	357 - 58
ZP3250A	♦LUCB	357 - 59
ZP3275	♦LUCB	357 - 60
ZP3275A	♦LUCB	357 - 61
ZPD1	♦ITTG	163 - 52
ZPD2V7	♦FGRS	164 -173
ZPD2.7	♦ITTG	164 -174
ZPD3	♦FGRS	165 -113
	♦ITTG	
ZPD3V3	♦FGRS	166 - 45
ZPD3V6	♦FGRS	167 - 11
ZPD3V9	♦FGRS	167 -188
ZPD3.3	♦ITTG	166 - 46
ZPD3.6	♦ITTG	167 - 12
ZPD3.9	♦ITTG	167 -189
ZPD4V3	♦FGRS	169 - 1
ZPD4V7	♦FGRS	170 - 46
ZPD4.3	♦ITTG	169 - 2
ZPD4.7	♦ITTG	170 - 47
ZPD5V1	♦FGRS	171 -127
ZPD5V6	♦FGRS	173 - 5
ZPD5.1	♦ITTG	171 -128
ZPD5.6	♦ITTG	173 - 6
ZPD6V2	♦FGRS	175 - 70
ZPD6V8	♦FGRS	178 - 39
ZPD6.2	♦ITTG	175 - 71
ZPD6.8	♦ITTG	178 - 40
ZPD7V5	♦FGRS	180 - 38
ZPD7.5	♦ITTG	180 - 39
ZPD8V2	♦FGRS	182 - 16
ZPD8.2	♦ITTG	182 - 17
ZPD9V1	♦FGRS	185 - 53
ZPD9.1	♦ITTG	185 - 54
ZPD10	♦FGRS	187 - 98
	♦ITTG	
ZPD10V	♦FGRS	187 - 99
ZPD11	♦FGRS	189 - 39
	♦ITTG	
ZPD11V	♦FGRS	189 - 40
ZPD12	♦FGRS	190 -210
	♦ITTG	
ZPD12V	♦FGRS	190 -211
ZPD13	♦FGRS	192 -175
	♦ITTG	
ZPD13V	♦FGRS	192 -176
ZPD15	♦FGRS	194 -195
	♦ITTG	
ZPD15V	♦FGRS	194 -196
ZPD16	♦FGRS	196 -106
	♦ITTG	
ZPD16V	♦FGRS	196 -107
ZPD18	♦FGRS	198 -109
	♦ITTG	
ZPD18V	♦FGRS	198 -110
ZPD20	♦FGRS	200 -108
	♦ITTG	
ZPD20V	♦FGRS	200 -109
ZPD22	♦FGRS	202 - 4
	♦ITTG	
ZPD22V	♦FGRS	202 - 25
ZPD24	♦FGRS	203 -111
	♦ITTG	
ZPD24V	♦FGRS	203 -129
ZPD27	♦FGRS	205 - 42
	♦ITTG	
ZPD27V	♦FGRS	205 - 63
ZPD30	♦FGRS	206 -178
	♦ITTG	
ZPD30V	♦FGRS	206 -200
ZPD33	♦FGRS	208 - 66
	♦ITTG	
ZPD33V	♦FGRS	208 - 87
ZPD36	♦ITTG	209 -141
ZPD39	♦ITTG	210 -177
ZPD43	♦ITTG	211 -193
ZPD47	♦ITTG	213 - 2
ZPD51	♦ITTG	214 - 9
ZPU100	♦ITTG	220 -154
ZPU120	♦ITTG	222 - 68
ZPU150	♦ITTG	224 - 56
ZPU180	♦ITTG	226 - 14
ZPY1	♦ITTG	163 - 36
ZPY3.9	♦ITTG	168 - 44
ZPY4.3	♦ITTG	169 - 65
ZPY4.7	♦ITTG	170 -121
ZPY5.1	♦ITTG	171 -203
ZPY5.6	♦ITTG	173 - 91
ZPY6.2	♦ITTG	175 -154
ZPY6.8	♦ITTG	178 -155
ZPY7.5	♦ITTG	180 -147
ZPY8.2	♦ITTG	182 -136
ZPY9.1	♦ITTG	185 -168
ZPY10	♦ITTG	188 - 29
ZPY11	♦ITTG	189 -143
ZPY12	♦ITTG	191 -118
ZPY13	♦ITTG	193 - 60
ZPY15	♦ITTG	195 -115
ZPY16	♦ITTG	196 -204
ZPY18	♦ITTG	199 - 14
ZPY20	♦ITTG	201 - 5
ZPY22	♦ITTG	202 -114
ZPY24	♦ITTG	203 -208
ZPY27	♦ITTG	205 -152
ZPY30	♦ITTG	207 - 76
ZPY33	♦ITTG	208 -169
ZPY36	♦ITTG	210 - 20
ZPY39	♦ITTG	211 - 57
ZPY43	♦ITTG	212 - 66
ZPY47	♦ITTG	213 - 83
ZPY51	♦ITTG	214 - 79
ZPY56	♦ITTG	215 - 68
ZPY62	♦ITTG	216 - 72
ZPY68	♦ITTG	217 - 53
ZPY75	♦ITTG	218 - 36
ZPY82	♦ITTG	219 - 13
ZPY91	♦ITTG	219 -191
ZPY100	♦ITTG	220 -155
ZR821-10	SLCB	174 -214
ZR821-20	SLCB	175 - 1
ZR821-50	SLCB	175 - 2
ZR821-75	SLCB	175 - 3
ZR821-100	SLCB	175 - 4
ZR821-120	SLCB	175 - 5
ZR821-150	SLCB	175 - 6
ZR823-10	SLCB	175 - 7
ZR823-20	SLCB	175 - 8
ZR823-50	SLCB	175 - 9
ZR823-75	SLCB	175 - 10
ZR823-100	SLCB	175 - 11
ZR823-120	SLCB	175 - 12
ZR823-150	SLCB	175 - 13
ZR825-20	SLCB	175 - 14
ZR825-50	SLCB	175 - 15
ZR825-75	SLCB	175 - 16
ZR825-100	SLCB	175 - 17
ZR825-120	SLCB	175 - 18
ZR825-150	SLCB	175 - 19
ZR827-20	SLCB	175 - 20
ZR827-50	SLCB	175 - 21
ZR827-75	SLCB	175 - 22
ZR827-100	SLCB	175 - 23
ZR827-120	SLCB	175 - 24
ZR827-150	SLCB	175 - 25
ZR829-50	SLCB	175 - 26
ZR829-75	SLCB	175 - 27
ZR829-100	SLCB	175 - 28
ZR829-120	SLCB	175 - 29
ZR935-20	SLCB	184 - 37
ZR935-50	SLCB	184 - 38
ZR935-75	SLCB	184 - 39
ZR935-100	SLCB	184 - 40
ZR935-120	SLCB	184 - 41
ZR935-150	SLCB	184 - 42
ZR936-20	SLCB	184 - 43
ZR936-50	SLCB	184 - 44
ZR936-75	SLCB	184 - 45
ZR936-100	SLCB	184 - 46
ZR936-120	SLCB	184 - 47
ZR936-150	SLCB	184 - 48
ZR937-20	SLCB	184 - 49
ZR937-50	SLCB	184 - 50
ZR937-75	SLCB	184 - 51
ZR937-100	SLCB	184 - 52
ZR937-120	SLCB	184 - 53
ZR937-150	SLCB	184 - 54
ZR938-50	SLCB	184 - 55
ZR938-75	SLCB	184 - 56
ZR938-100	SLCB	184 - 57
ZR938-120	SLCB	184 - 58
ZR939-50	SLCB	184 - 59
ZR939-75	SLCB	184 - 60
ZR939-100	SLCB	184 - 61
ZR939-120	SLCB	184 - 62
ZS6	♦SLCB	175 - 30
ZS7	♦SLCB	177 - 34
ZS8.5	♦SLCB	183 - 54
ZS9	♦SLCB	184 - 63
ZS11	♦SLCB	189 - 41
ZS11.2	♦SLCB	190 - 14
ZS11.4	♦SLCB	190 - 27
ZS12	♦SLCB	190 -108
ZS12.4	♦SLCB	192 - 3
ZS14	♦SLCB	193 -157
ZS17	♦SLCB	197 - 84
ZS18.6	♦SLCB	199 -102
ZS23	♦SLCB	202 -192
ZS24.8	♦SLCB	204 - 81
ZS31	♦SLCB	207 -149
ZS37	♦SLCB	210 - 99
ZS43	♦SLCB	212 -125
ZS50#C	♦SLCB	213 -152
ZS60	♦SLCB	215 -151
ZS61	♦SLCB	175 - 31
ZS75	♦SLCB	217 -179
ZS91#C	♦SLCB	184 - 64
ZS100	♦FERB	236 -146
ZS101	♦FERB	236 -147
ZS102	♦FERB	236 -148
ZS103	♦FERB	236 -149
ZS104	♦FERB	236 -150
ZS106	♦FERB	236 -151
ZS108	♦FERB	236 -152
ZS120	♦FERB	236 - 40
ZS121	♦FERB	236 - 41
ZS122	♦FERB	236 - 42
ZS123	♦FERB	236 - 43
ZS124	♦FERB	236 - 44
ZS150	♦FERB	257 - 84
ZS151	♦FERB	257 - 87
ZS152	♦FERB	257 - 85
ZS153	♦FERB	257 - 88
ZS154	♦FERB	257 - 86
ZS155	♦FERB	257 - 89
ZS170	♦FERB	277 -206
ZS171	♦FERB	278 - 16
ZS172	♦FERB	278 - 56
ZS174	♦FERB	278 -138
ZS176	♦FERB	278 -209
ZS178	♦FERB	279 - 40
ZS270	FERB	283 - 86
ZS271	FERB	283 -136
ZS272	FERB	283 -200
ZS274	FERB	284 - 88
ZS276	FERB	284 -191
ZS278	FERB	285 - 52
ZS605	SLCB	175 - 32
ZS901	SLCB	184 - 65
ZS902	SLCB	184 - 66
ZS905	SLCB	184 - 67
ZS6010	SLCB	175 - 33
ZS6011	SLCB	175 - 34
ZS6020	SLCB	175 - 35
ZS6021	SLCB	175 - 36
ZSA7	SLCB	176 -201
ZSA11	♦SLCB	190 - 13
ZTE1.5	♦ITTG	163 - 87
ZTE2	♦ITTG	163 -130
ZTE2.4	♦ITTG	164 - 26
ZTE2.7	♦ITTG	164 -140
ZTE3	♦ITTG	165 - 64
ZTE3.3	♦ITTG	165 -197
ZTE3.6	♦ITTG	166 -167
ZTE3.9	♦ITTG	167 -133
ZTE4.3	♦ITTG	168 -140
ZTE4.7	♦ITTG	169 -174
ZTE5.1	♦ITTG	171 - 51
ZTK6.8	♦ITTG	177 -137
ZTK9	♦ITTG	186 - 91
ZTK11	♦ITTG	188 -156
ZTK18	♦ITTG	198 - 18
ZTK22	♦ITTG	201 -123
ZTK27	♦ITTG	204 -175
ZTK33	ITTG	207 -195
ZTK33A	ITTG	206 -106
ZTK33B	ITTG	207 -168
ZTK33C	ITTG	209 - 41
ZX3.9	♦ITTG	377 -113
ZX4.3	♦ITTG	377 -151
ZX4.7	♦ITTG	378 - 34
ZX5.1	♦ITTG	378 - 77
ZX5.6	♦ITTG	378 -124
ZX6.2	♦ITTG	378 -177
ZX6.8	♦ITTG	379 - 77
ZX7.5	♦ITTG	380 - 2
ZX8.2	♦ITTG	380 -117
ZX9.1	♦ITTG	381 - 39
ZX10	♦ITTG	381 -148
ZX11	♦ITTG	382 - 36
ZX12	♦ITTG	382 -159
ZX13	♦ITTG	383 - 66
ZX15	♦ITTG	384 - 45
ZX16	♦ITTG	384 -141
ZX18	♦ITTG	385 -107
ZX20	♦ITTG	386 - 54
ZX22	♦ITTG	386 -161
ZX24	♦ITTG	387 - 75
ZX27	♦ITTG	388 - 17
ZX30	♦ITTG	388 -133
ZX33	♦ITTG	389 - 42
ZX36	♦ITTG	389 -151
ZX39	♦ITTG	390 - 42
ZX43	♦ITTG	390 -149
ZX47	♦ITTG	391 - 84
ZX51	♦ITTG	214 - 74
ZX56	♦ITTG	392 -142
ZX62	♦ITTG	393 - 54
ZX68	♦ITTG	393 -148
ZX75	♦ITTG	394 - 70
ZX82	♦ITTG	394 -173
ZX91	♦ITTG	395 - 82
ZX100	♦ITTG	395 -192
ZX110	♦ITTG	396 -109
ZX120	♦ITTG	396 -196
ZX130	♦ITTG	397 - 85
ZX150	♦ITTG	398 - 28
ZX160	♦ITTG	398 -105
ZX180	♦ITTG	226 - 10
ZX200	♦ITTG	399 - 31
ZY1	♦ITTG	163 - 37
ZY3.9	♦ITTG	168 - 45
ZY4.3	♦ITTG	169 - 61
ZY4.7	♦ITTG	170 -117
ZY5.1	♦ITTG	171 -199
ZY5.6	♦ITTG	173 - 87
ZY6.2	♦ITTG	175 -150
ZY6.8	♦ITTG	178 -151
ZY7.5	♦ITTG	180 -143
ZY8.2	♦ITTG	182 -132
ZY9.1	♦ITTG	185 -164
ZY10	♦FGRS	188 - 24
	♦ITTG	
ZY11	♦FGRS	189 -140
	♦ITTG	
ZY12	♦FGRS	191 -116
	♦ITTG	
ZY13	♦FGRS	193 - 59
	♦ITTG	
ZY15	♦FGRS	195 -112
	♦ITTG	
ZY16	♦FGRS	196 -203
	♦ITTG	
ZY18	♦FGRS	199 - 11
	♦ITTG	
ZY20	♦FGRS	201 - 2
	♦ITTG	
ZY22	♦FGRS	202 -112
	♦ITTG	
ZY24	♦FGRS	203 -207
	♦ITTG	
ZY27	♦FGRS	205 -148
	♦ITTG	
ZY30	♦FGRS	207 - 72
	♦ITTG	
ZY33	♦FGRS	208 -165
	♦ITTG	
ZY36	♦FGRS	210 - 16
	♦ITTG	
ZY39	♦FGRS	211 - 56
	♦ITTG	
ZY43	♦FGRS	212 - 62
	♦ITTG	
ZY47	♦FGRS	213 - 79
	♦ITTG	
ZY51	♦FGRS	214 - 75
	♦ITTG	
ZY56	♦FGRS	215 - 65
	♦ITTG	
ZY62	♦FGRS	216 - 69
	♦ITTG	
ZY68	♦FGRS	217 - 50
	♦ITTG	
ZY75	♦FGRS	218 - 34
	♦ITTG	
ZY82	♦FGRS	219 - 11
	♦ITTG	
ZY91	♦FGRS	219 -189
	♦ITTG	
ZY100	♦FGRS	220 -151
	♦ITTG	
ZY110	♦FGRS	221 -115
	♦ITTG	
ZY120	♦FGRS	222 - 67
	♦ITTG	
ZY130	♦FGRS	223 - 22
	♦ITTG	
ZY150	♦FGRS	224 - 54
	♦ITTG	
ZY160	♦FGRS	224 -182
	♦ITTG	
ZY180	♦FGRS	226 - 11
	♦ITTG	
ZY200	♦FGRS	227 - 6
	♦ITTG	
ZZ12	♦FGRS	357 - 62
ZZ16	♦FGRS	330 - 81
	♦ITTG	
ZZ22	♦FGRS	357 - 63
	♦ITTG	
ZZ36	♦FGRS	330 - 82
	♦ITTG	
ZZ62	♦FGRS	330 - 83
	♦ITTG	
ZZ75	♦FGRS	357 - 64
	♦ITTG	

Δ-Registered with JEDEC by this manufacturer

♦-Mfr's data sheet available in microfilm service

1. TYPE No. CROSS INDEX

IN TYPE NUMBER SEQUENCE

TYPE No.	MFRS	Pg&Line	TYPE No.	MFRS	Pg&Line	TYPE No.	MFRS	Pg&Line	TYPE No.	MFRS	Pg&Line	TYPE No.	MFRS	Pg&Line
ZZ91	♦FGRS	357 - 65												
	♦ITTG													
ZZ110	♦FGRS	357 - 66												
	♦ITTG													
ZZ160	♦FGRS	330 - 84												
	♦ITTG													
ZZY16	♦ITTG	330 - 85												
ZZY22	♦ITTG	357 - 67												
ZZY36	♦ITTG	330 - 86												
ZZY62	♦ITTG	330 - 87												
ZZY75	♦ITTG	357 - 68												
ZZY91	♦ITTG	357 - 69												
ZZY110	♦ITTG	357 - 70												
ZZY160	♦ITTG	330 - 88												

Δ-Registered with JEDEC by this manufacturer

♦-Mfr's data sheet available in microfilm service

IN ORDER OF: (1) REF. VOLTAGE (2) PD MAX (3) TOLERANCE & (4) TYPE NUMBER

LOW VOLTAGE ZENER

LINE No.	4 TYPE No.	3 TOL ± (%)	1 NOM. REF. VOLT. (V)	2 PD @ 25°C MAX (W)	TEST CUR. Izt (A)	DYN. IMP. MAX (Ω)	TEMP. COEFF Tc MAX	TEMP MAX (°C)	DWG. NO.
4	1N3287$*	20	260m		1.0m	60		90A	DO7
5	1N3287W$*	20	.26	250m	1.0m	60		90A	DO7
6	SV1LR	15†	410m	750m	10u	4.0k	730m	150A	A1fq
7	CODI6041	1	470m	400m	300m	800		175	DO7
8	CODI6045	1	470m	400m	300m	800		175	DO7
9	CODI6049	1	470m	400m	300m	800		175	DO7
10	G129	10	.56		1.0m			150S	A1
11	ST23*	10	.60		1.0m	45	33	150	DO7
12	C6045M*	10	612m	250m	3.0m	12 †		175A	A2
13	C6045*	10	612m	400m	3.0m	12 †		175A	DO7
14	1N912A	5	.62	.50	1.0m	60	.32	150A	DO7
15	1N912	10	.62	.50	1.0m	60	.32	150A	DO7
16	1N913A	5	.62	.60	1.0m	60	.32	150A	DO7
17	1N913	10	.62	.60	1.0m	60	.32	150A	DO7
18	APD103*		630m	400m	10m			150A	A1aq
19	1N816*	10	640m		150m	50		150A	DO7
20	G130	10	.64		1.0m			150S	A1
21	ST22*	10	.64		1.0m	60	31	150	DO7
22	STB1*	10	.65		10m			175A	A1bs
23	1N4362*	10	.65	.40	1.0m	40		200A	DO7
24	MZ2360*	5	.67	400m§	10m			175J	DO41
25	C6041M*		700m	250m	3.0m	12 †		175A	A2
26	C6049M*		700m	250m	3.0m	12 †		175A	A2
27	BZ102-0V7	7	700m	250m	5.0m	10	23	150J	DO7
28	BZY83D1	10	.70	.25	5.0m	8.0 †	35	150J	C1g
29	1S990	15	.70	.25	10m	10	22	150J	A1ce
30	C6041*		700m	400m	3.0m	12 †		175A	DO7
31	C6049*		700m	400m	3.0m	12 †		175A	DO7
32	Z0A0.7*	1†	700m	500m	5.0m	10 †	26	200J	DO29
33	Z0B0.7*	5†	700m	500m	5.0m	10 †	26	200J	DO29
34	BZW22C1	7	700m	1.3	5.0m	8.0	26		DO41
35	ZMY1	7	0.7	1.3	5.0m	8.0	24	200J	F149
36	ZPY1*	7	700m	1.3	5.0m	8.0	23	200J	DO41
37	ZY1	7	700m	1.3	100m	8.0	16	150J	A1bg
38	BZX62	7	725m	250m	10m		27	150S	DO7
39	ZMM1	2†	0.75	500m	5.0m	8.0	24	175J	F135
40	1N3896	5	.775	.25	50m	2.5	20	150	DO7
41	BZV49C0V8	5	.78		5.0m	8.0	-24	150J	M1008
42	BZX55C0V8	5	780m	500m	5.0m	8.0		175A	DO35
43	BZX83C0V8	5	780m	500m	5.0m	10	9.0	175J	DO35
44	BZX97C0V8	6	780m	500m	5.0m	8.0	22	175J	DO35
45	SZ102/0V8*	12	800m	200m	5.0m			150J	M901
46	ST37*		.83	.25	100m	15 †		150	DO7
47	1N2938	16	900m	2.0	100m	1.5		125J	DO4
48	BA315*	10	915m		100m			200J	DO35
49	CODI6042	1	940m	400m	300m	800		175	DO7
50	CODI6046	1	940m	400m	300m	800		175	DO7
51	CODI6050	1	940m	400m	300m	800		175	DO7
52	ZPD1	5	1.0	.50	5.0m	80	24	175J	DO35
53	1N3774	2	1.15	.34	10m	20		100S	A1ha
54	SV3140B*	1	1.15	500m	10m	20	43	150A	A1hd
55	SV3140A*	2	1.15	500m	10m	20	43	150A	A1hd
56	SV3140	5	1.15	500m	10m	20	43	150A	A1hd
57	K120A	5	1.2	400m§	10m	17	3.2mV	175A	DO7
58	K120	10	1.2	400m§	10m	17	3.2mV	175A	DO7
59	9491AJ		1.22			2.0	50 p	70	TO92
60	9491AM		1.22			2.0	500m	125	TO18
61	9491BJ		1.22			2.0	100 p	70	TO92
62	9491BM		1.22			2.0	1.0	125	TO18
63	C6046M*	10	1.22	250m	3.0m	24 †		175A	A2
64	C6046*	10	1.22	400m	3.0m	24 †		175A	DO7
65	STB2*	10	1.3		10m			175A	A1bs
66	APD203*		1.30	400m	10m			150A	A1aq
67	Z0A1.3*	1†	1.3	500m	5.0m	20 †	26	200J	DO29
68	Z0B1.3*	5†	1.3	500m	5.0m	20 †	26	200J	DO29
69	MZ2361*	5	1.31	400m§	10m			175J	DO7
70	C6042M*		1.40	250m	3.0m	24 †		175A	A2
71	C6050M*		1.40	250m	3.0m	24 †		175A	A2
72	1S991	7.0	1.4	.25	10m	20	22	150J	A1ce
73	BZ102-1V4	7	1.4	250m	5.0m	20	23	150J	DO7
74	C6042*		1.40	400m	3.0m	24 †		175A	DO7
75	C6050*		1.40	400m	3.0m	24 †		175A	DO7
76	CODI6043	1	1.4	400m	300m	800		175	DO7
77	CODI6047	1	1.4	400m	300m	800		175	DO7
78	CODI6051	1	1.4	400m	300m	800		175	DO7
79	BZX75C1V4	5	1.4	400m§	10m	10	23	175J	DO7
80	Z0A1.4*	1†	1.4	500m	5.0m	20 †	26	200J	DO29
81	Z0B1.4	5†	1.4	500m	5.0m	20 †	26	200J	DO29
82	PS1171,A	5†	1.4	1.0	10m	20	23	150A	A1gd
83	PLE1.5		1.45		5.0m	20			A344r
84	BZV46-1V5	6.9	1.45	250m§	5.0m	20	3.6 V	150J	DO35
85	BZV46-C1V5*	7	1.45	250m		20	3.6mV	150J	DO35
86	1N3897	5	1.5	.25	30m	5.0	22	150	DO7
87	ZTE1.5*	13	1.5	350m	5.0m	20	26	150J	DO35
88	K150A	5	1.5	400m§	10m	17	3.2mV	175A	DO7
89	K150	10	1.5	400m§	10m	17	3.2mV	175A	DO7
90	SV3141B*	1	1.50	500m	10m	20	33	150A	A1hd
91	SV3141A*	2	1.50	500m	10m	20	33	150A	A1hd
92	SV3141	5	1.5	500m	10m	20	33	150A	A1hd
93	1N3392	10	1.5	500m	50m	8.0	10	200S	P5
94	1.25AGD		1.5	2.5	2.5		20	100	A3q
95	SZ102/1V5*	10	1.55	200m	5.0m			150J	M901
96	PS1172,A	5†	1.55	1.0	10m	28	21	150A	A1gd
97	ST38*		1.65	.25	100m	30 †		150	DO7
98	PS1173,A	5†	1.7	1.0	10m	36	19	150A	A1gd
99	HZ2LLA		1.8	250m	500u	350		175J	DO35
100	1N4614	5	1.8	.25	.25m	1.2k		200	DO14
101	1N4678	5	1.8	.25	.05m			200A	DO14
102	MZ4678	5	1.8	250m§	50u			175J	E204h
103	APD303*		1.80	400m	10m			150A	A1aq
104	CD4614	5	1.8	400m	250u	1.2k	7.5	200J	u39a
105	CH4614	5	1.8	400m	250u	1.2k	7.5	200J	u10
106	K180A	5	1.8	400m§	10m	17	3.2mV	175A	DO7
107	K180	10	1.8	400m§	10m	17	3.2mV	175A	DO7
108▼	SZ.5-1.8-5-25	5.0	1.8	500m	25M			175	u5a
109	1N3393	10	1.8	500m	50m	8.0	10	200S	P5
110▼	SZ.5-1.8-10-25	10	1.8	500m	25m			175	u5a
111▼	SZ.5-1.8-20-25	20	1.8	500m	25m			175	u5a
112▼	SZ1-1.8-5-25	5.0	1.8	1.0	25m			175	u5b
113▼	SZ1-1.8-10-25	10	1.8	1.0	25m			175	u5b
114▼	SZ1-1.8-20-25	20	1.8	1.0	25m			175	u5b
115▼	SZ3-1.8-5-25	5.0	1.8	5.0	25m			175	u5c
116▼	SZ3-1.8-10-25	10	1.8	5.0	25m			175	u5c
117▼	SZ3-1.8-20-25	10	1.8	5.0	25m			175	u5c
118	1N370	20	1.85		20m			150A	A1er
119	C6047M*	10	1.85	250m	3.0m	36 †		175A	A2
120	C6047*	10	1.85	400m	3.0m	36 †		175A	DO7
121	CODI6044	1	1.9	400m	300m	800		175	DO7
122	CODI6048	1	1.9	400m	300m	800		175	DO7
123	CODI6052	1	1.9	400m	300m	800		175	DO7
124	SV3142B*	1	1.90	500m	10m	30	26	150A	A1hd
125	SV3142A*	2	1.90	500m	10m	30	26	150A	A1hd
126	SV3142	5	1.9	500m	10m	30	26	150A	A1hd
127	1N3898	5	2.0	.25	20m	10	23	150	DO7
128	1N4615	5	2.0	.25	250u	1.2k		200	DO14
129	1N4679	5	2.0	.25	.05m			200A	DO14
130	ZTE2*	13	2.0	350m	5.0m	30	26	150J	DO35
131	CD4615	5	2.0	400m	250u	1.2k	7.5	200J	u39a
132	CH4615	5	2.0	400m	250u	1.2k	7.5	200J	u10
133	GZA2.0		2.0	500m		50 †	10		A159
134	RD2.0EK		2.0	500m	20m	140		175J	DO35
135	Z0A2.0	1†	2.0	500m	5.0m	50 †	9.0	200J	DO29
136	HZ2B1	5	2.0	500m	5.0m	100	1.5mV	175J	DO35
137	HZ2HB1	5	2.0	500m	5.0m	100	1.5mV	175J	DO35
138	RD2.0EB	5	2.0	500m	20m	140		175J	DO35
139▼	SZ.5-2.0-5-25	5.0	2.0	500m	25M			175	u5a
140	Z0B2.0	5†	2.0	500m	5.0m	50 †	9.0	200J	DO29
141▼	SZ.5-2.0-10-25	10	2.0	500m	25m			175	u5a
142▼	SZ.5-2.0-20-25	20	2.0	500m	25m			175	u5a
143	HZ2.0PB		2.0	800m	40m	25		175J	DO41
144	RD2.0FB	5	2.0	1.0	40m	25		175J	A297c
145▼	SZ1-2.0-5-25	5.0	2.0	1.0	25m			175	u5b
146▼	SZ1-2.0-10-25	10	2.0	1.0	25m			175	u5b
147▼	SZ1-2.0-20-25	20	2.0	1.0	25m			175	u5b
148	AW03-02	30	2.0	1.0	60m	15	9.0	150J	A277n
149▼	SZ3-2.0-5-25	5.0	2.0	5.0	25m			175	u5c
150▼	SZ3-2.0-10-25	10	2.0	5.0	25m			175	u5c
151▼	SZ3-2.0-20-25	10	2.0	5.0	25m			175	u5c
152	PLE2		2.05		5.0m	30			A344r
153	C6043M*		2.10	250m	3.0m	36 †		175A	A2
154	C6051M*		2.10	250m	3.0m	36 †		175A	A2
155	HZ2LLB		2.1	250m	500u	350		175J	DO35
156	BZ102-2V1	10	2.1	250m	5.0m	30	23	150J	DO7
157	C6043*		2.10	400m	3.0m	36 †		175A	DO7
158	C6051*		2.10	400m	3.0m	36 †		175A	DO7
159	BZX75C2V1	5	2.1	400m§	10m	15	23	175J	DO7
160	K210A	5	2.1	400m§	10m	17	3.2mV	175A	DO7
161	K210	10	2.1	400m§	10m	17	3.2mV	175A	DO7
162	HZ2B2	5	2.1	500m	5.0m	100	1.5mV	175J	DO35
163	HZ2HB2	5	2.1	500m	5.0m	100	1.5mV	175J	DO35
164	HZ2.0PC		2.1	800m	40m	25		175J	DO41
165	PS1174,A	5†	2.1	1.0	10m	30	23	150A	A1gd
166	RD2.0EC		2.12	500m	20m	140		175J	A277b
167	RD2.0FC		2.12	1.0	40m	25		175J	A277r
168	BZV46-2V0	7	2.15	250m§	5.0m	30	5.6 V	150J	DO35
169	BZV46-C2V0*	7	2.15	250m		30	5.6mV	150J	DO35
170	SZ102/2V2*	9	2.2	200m	5.0m			150J	M901
171	1N3477A	5	2.2	250m	5.0m	60		175	A60p
172	1N4616	5	2.2	.25	.25m	1.3k		200	DO14
173	1N4680	5	2.2	.25	.05m			200A	DO14
174	1N3477	10	2.2	250m	5.0m	60		175	A60p
175	02BZ2.2	15	2.2	250m	10m	30	8.8	175J	DO35
176	CD4616	5	2.2	400m	250u	1.3k	7.5	200J	u39a
177	CH4616	5	2.2	400m	250u	1.3k	7.5	200J	u10
178	05Z2.2		2.2	500m	10m	180	10	175J	DO35
179	GZA2.2		2.2	500m		48 †	10		A159
180	RD2.2EK		2.2	500m	20m	120		175J	DO35
181	Z0A2.2	1†	2.2	500m	5.0m	50 †	9.0	200J	DO29
182	HZ2B3	4	2.2	500m	5.0m	100	1.5mV	175J	DO35
183	HZ2HB3	4	2.2	500m	5.0m	100	1.5mV	175J	DO35
184	RD2.2EB	5	2.2	500m	20m	120		175J	DO35
185▼	SZ.5-2.2-5-25	5.0	2.2	500m	25M			175	u5a
186	Z0B2.2	5†	2.2	500m	5.0m	50 †	9.0	200J	DO29
187	1N3394	10	2.2	500m	50m	9.0	10	200S	P5
188▼	SZ.5-2.2-10-25	10	2.2	500m	25m			175	u5a
189▼	SZ.5-2.2-20-25	20	2.2	500m	25m			175	u5a
190	HZ2.2PB		2.2	800m	40m	20		175J	DO41
191	RD2.2FB	5	2.2	1.0	40m	20		175J	A297c
192▼	SZ1-2.2-5-25	5.0	2.2	1.0	25m			175	u5b
193▼	SZ1-2.2-10-25	10	2.2	1.0	25m			175	u5b
194▼	SZ1-2.2-20-25	20	2.2	1.0	25m			175	u5b

SYMBOLS AND CODES EXPLAINED IN INTERPRETER

2. VOLTAGE REFERENCE DIODES - Low Voltage (Cont'd)

IN ORDER OF: (1) REF. VOLTAGE (2) PD MAX (3) TOLERANCE & (4) TYPE NUMBER

LINE No.	4 TYPE No.	3 TOL ± (%)	1 NOM. REF. VOLT. (V)	2 PD @ 25°C MAX (W)	TEST CUR. Izt (A)	DYN. IMP. MAX (Ω)	TEMP. COEFF Tc MAX	TEMP MAX (°C)	DWG. NO.
1▼	SZ3-2.2-5-25	5.0	2.2	5.0	25m			175	u5c
2▼	SZ3-2.2-10-25	10	2.2	5.0	25m			175	u5c
3▼	SZ3-2.2-20-25	10	2.2	5.0	25m			175	u5c
4	1N3198	2	2.25	.40	10m	30		125S	A1ha
5	SV3143B*	1	2.25	500m	10m	30	22	150A	A1hd
6	SV3143A*	2	2.25	500m	10m	30	22	150A	A1hd
7	SV3143	5	2.25	500m	10m	30	22	150A	A1hd
8	HZ2C1	6	2.3	500m	5.0m	100	1.5mV	175J	DO35
9	HZ2HC1	6	2.3	500m	5.0m	100	1.5mV	175J	DO35
10	HZ2.2PC		2.3	800m	40m	20		175J	DO41
11	PS1175,A	5†	2.3	1.0	10m	42	21	150A	A1gd
12	RD2.2EC		2.32	500m	20m	120		175J	A277b
13	RD2.2FC		2.32	1.0	40m	20		175J	A277r
14	1N371	15	2.35		20m			150A	A1er
15	BZV49C2V4	5	2.4		5.0m	85	-8	150J	M1008
16	RD2.4MB		2.4	200m	5.0m	100		150J	M500c
17	BZX84C2V4	5	2.4	200m	5.0m	85	6.0	150J	M500d
18	HZ2LLC		2.4	250m	500u	350		175J	DO35
19	1N4360	5	2.4	.25	10m	60		175J	DO7
20	1N4617	5	2.4	.25	.25m	1.4k		200	DO14
21	1N4681	5	2.4	.25	.05m			200A	DO14
22	1/4M2.4AZ10	10†	2.4	250m	10m	60		175J	E204h
23	VR182A	1	2.4	300m	120m	200m	100	150S	TO18
24	VR182B	1	2.4	300m	120m	200m	50	150S	TO18
25	VR182C	1	2.4	300m	120m	200m	30	150S	TO18
26	ZTE2.4	11	2.4	350m	5.0m	20	30	150J	DO35
27	BZX79B2V4	2	2.4	400m§	5.0m	100	1.6mV	200J	DO35
28	1N4370A	5	2.4	400m	20m	30		175	DO7
29	BZX79C2V4	5	2.4	400m§	5.0m	100	1.6mV	200J	DO35
30	CD4370A	5	2.4	400m	20m	30	8.5	200J	u39a
31	CD4617	5	2.4	400m	250u	1.4k	7.5	200J	u39a
32	CD5221B	5	2.4	400m	20m	30	8.5	200J	u39a
33	CH4370	5	2.4	400m	20m	30	8.5	200J	u10
34	CH4617	5	2.4	400m	250u	1.4k	7.5	200J	u10
35	CH5221	5	2.4	400m	20m	30	8.5	200J	u10
36	K240A	5	2.4	400m§	10m	17	3.2mV	175A	DO7
37	1N4370	10	2.4	400m	20m	30		175	DO7
38	K240	10	2.4	400m§	10m	17	3.2mV	175A	DO7
39	05Z2.4		2.4	500m	10m	150	10	175J	DO35
40	GZA2.4		2.4	500m		46 †	10		A159
41	RD2.4EK		2.4	500m	20m	100		175J	DO35
42	1N5985D	1	2.4	500m	5.0m	100	9.0	200J	DO35
43	Z0A2.4	1†	2.4	500m	5.0m	50 †	9.0	200J	DO29
44	1N5985C	2	2.4	500m	5.0m	100	9.0	200J	DO35
45	HZ2C2	4	2.4	500m	5.0m	100	1.5mV	175J	DO35
46	HZ2HC2	4	2.4	500m	5.0m	100	1.5mV	175J	DO35
47	1N5221B	5	2.4	500m	20m	30	8.5	200A	A398a
48	1N5837B	5	2.4	500m	20m	50		150C	M859
49	1N5985B	5	2.4	500m	5.0m	100		200J	DO35
50	BZX55C2V4	5	2.4	500m	5.0m	80	8.0	175A	DO35
51	BZX83C2V4	5	2.4	500m	5.0m	90	8.0	175A	DO35
52	BZX97C2V4	5	2.4	500m	5.0m	85	8.0	175J	DO35
53	MLL5221B	5.0	2.4	500m§	20m	30	8.5	200J	F140
54	RD2.4EB	5	2.4	500m	20m	100		175J	DO35
55▼	SZ.5-2.4-5-25	5.0	2.4	500m	25M			175	u5a
56	Z0B2.4	5†	2.4	500m	5.0m	50 †	9.0	200J	DO29
57	BZV55C2V4	8.3	2.4	500m	5.0m	100	1.6	200J	F139
58	BZV60C2V4	8.3	2.4	500m	5.0m	100	1.6	200J	DO34
59	1N5221A	10	2.4	500m	20m	30	8.5	200A	A398a
60	1N5837A	10	2.4	500m	20m	50		150C	M859
61	1N5985A	10	2.4	500m	5.0m	110		200J	DO35
62	MLL5221A	10	2.4	500m§	20m	30	8.5	200J	F140
63▼	SZ.5-2.4-10-25	10	2.4	500m	25m			175	u5a
64	1N5221	20†	2.4	.50	20m			200A	A398a
65	1N5985	20	2.4	500m	5.0m	110		200J	DO35
66	MLL5221	20	2.4	500m§	20m	30		200J	F140
67▼	SZ.5-2.4-20-25	20	2.4	500m	25m			175	u5a
68	MLV4370A	5	2.4	750m	20m	30		175A	A2j
69	HZ2.4PB		2.4	800m	40m	15		175J	DO41
70	SZ2.4	2†	2.4	1.0	20m	14 †	5.4	150A	A3g
71	RD2.4FB	5	2.4	1.0	40m	15		175J	A297c
72▼	SZ1-2.4-5-25	5.0	2.4	1.0	25m			175	u5b
73▼	SZ1-2.4-10-25	10	2.4	1.0	25m			175	u5b
74▼	SZ1-2.4-20-25	20	2.4	1.0	25m			175	u5b
75▼	SZ3-2.4-5-25	5.0	2.4	5.0	25m			175	u5c
76▼	SZ3-2.4-10-25	10	2.4	5.0	25m			175	u5c
77▼	SZ3-2.4-20-25	10	2.4	5.0	25m			175	u5c
78	C6048M*	10	2.45	250m	3.0m	48 †		175A	A2
79	C6048*	10	2.45	400m	3.0m	48 †		175A	DO7

$V_Z \geq 2.5$ V

LINE No.	4 TYPE No.	3 TOL ± (%)	1 NOM. REF. VOLT. (V)	2 PD @ 25°C MAX (W)	TEST CUR. Izt (A)	DYN. IMP. MAX (Ω)	TEMP. COEFF Tc MAX	TEMP MAX (°C)	DWG. NO.
83	LM136AH	1	2.5		1.0m	.60	20 p	150	TO46
84	LM236AH	1	2.5		1.0m	.60	20 p	125J	TO46
85	LM136H	2	2.5		1.0m	.60	20 p	150	TO46
86	LM236H	2	2.5		1.0m	.60	20 p	125J	TO46
87	LM336BH	2	2.5		1.0m	1.0	20 p	70	TO46
88	LM336BZ	2	2.5		1.0m	1.0	20 p	70	TO92
89	LM336H	4	2.5		1.0m	1.0	20 p	70	TO46
90	LM336Z	4	2.5		1.0m	1.0	20 p	70	TO92
91	ST39*		2.5	.25	100m	45 †		150	DO7
92	1N5670A	10	2.5	250m§	20m	25		125A	C29n
93	CD5222B	5	2.5	400m	20m	30	8.5	200J	u39a
94	CH5222	5	2.5	400m	20m	30	8.5	200J	u10
95	MZC2.5A10	5†	2.5	400m§	20m	53	8.5	175J	u5
96	HZ2C3	4	2.5	500m	5.0m	100	1.5mV	175J	DO35
97	HZ2HC3	4	2.5	500m	5.0m	100	1.5mV	175J	DO35
98	1N5222B	5	2.5	500m	20m	30	8.5	200A	A398a
99	MLL5222B	5.0	2.5	500m§	20m	30	8.5	200J	F140
100	1N5222A	10	2.5	500m	20m	30	8.5	200A	A398a
101	1N5838A	10	2.5	500m	20m	50		150C	M859
102	MLL5222A	10	2.5	500m§	20m	30	8.5	200J	F140
103	1N5222	20†	2.5	.50	20m			200A	A398a
104	MLL5222	20	2.5	500m§	20m	30		200J	F140
105	HZ2.4PC		2.5	800m	40m	15		175J	DO41
106	PS1176,A	5†	2.5	1.0	10m	54	19	150A	A1gd
107	RD2.4EC		2.55	500m	20m	100		175J	A277b
108	RD2.4FC		2.55	1.0	40m	15		175J	A277r
109	STB4*	10	2.6		10m			175A	A1fg
110	1N465B	1	2.6	200m	5.0m	60 †		150S	C1
111	1N465A	5	2.6	200m	5.0m	60 †		150S	C1
112	RD2.7MB1	5	2.6	200m	5.0m	110		150	
113	1N465	10	2.6	250m	5.0m	60 †		200A	C1
114	1N702A	11.	2.6	.25	5.0m	60		200A	A398
115	1N702	23	2.6	.25	10m	60		200A	A398
116	HZ3A1	4	2.6	400m	5.0m	100	2.0mV	175J	DO35
117	HZ3HA1	4	2.6	500m	5.0m	100	2.0mV	175J	DO35
118	PS6465	13	2.6	.50	10m	60		200J	A1gd
119	RD2.7EB1		2.64	500m	20m	100		175J	A277b
120	RD2.7EL1		2.64	500m	1.0m	100		175J	A277b
121	RD2.7EN1		2.64	500m	5.0m	100		175J	A277b
122	SV3144B*	1	2.65	500m	10m	40	19	150A	A1hd
123	SV3144A*	2	2.65	500m	10m	40	19	150A	A1hd
124	HZ2.7EB1	4.8	2.65	500m	20m	100		175J	DO35
125	SV3144	5	2.65	500m	10m	40	19	150A	A1hd
126	RD2.7FB1		2.65	1.0	40m	15		175J	A277r
127	TZPD2.7		2.7		5.0m	83	7.0		DO35
128	BZV49C2V7	5	2.7		5.0m	85	-8	150J	M1008
129	ND2V7	10	2.7		5.0m	120	7.0		u48
130	RD2.7MB		2.7	200m	5.0m	110		150J	M500c
131	BZX84C2V7	5	2.7	200m	5.0m	85	6.0	150J	M500d
132	HZ3LLA		2.7	250m	500u	360		175J	DO35
133	1N4618	5	2.7	.25	.25m	1.5k		200	DO14
134	1N4682	5	2.7	.25	.05m			200A	DO14
135	PD6000,A	5†	2.7	.25	10m	60		150	A109
136	PD6041	5	2.7	.25	10m	45		150	A2c
137	1/4M2.7AZ10	10†	2.7	250m	10m	60		175J	E204h
138	02BZ2.7	15	2.7	250m	10m	30	7.8	175J	DO35
139	BZX88C2V7	5	2.7	300m	5.0m	120	7.0	175S	A412
140	ZTE2.7	14	2.7	350m	5.0m	20	30	150J	DO35
141	BZX79B2V7	2	2.7	400m§	5.0m	100	2.0mV	200J	DO35
142	HZ3A2	4	2.7	400m	5.0m	100	2.0mV	175J	DO35
143	1N4371A	5	2.7	400m	20m	30		175J	DO7
144	BZX79C2V7	5	2.7	400m§	5.0m	100	2.0mV	200J	DO35
145	BZX96C2V7	5	2.7	400m	5.0m	80	7.0	150J	DO7
146	CD4371A	5	2.7	400m	20m	30	8.0	200J	u39a
147	CD4618	5	2.7	400m	250u	1.5k	7.5	200J	u39a
148	CD5223B	5	2.7	400m	20m	30	8.0	200J	u39a
149	CH4371	5	2.7	400m	20m	30	8.0	200J	u10
150	CH4618	5	2.7	400m	250u	1.5k	7.5	200J	u10
151	CH5223	5	2.7	400m	20m	30	8.0	200J	u10
152	GSZ2.7A	5	2.7	400m	20m	30			A69a
153	K270A	5	2.7	400m§	10m	17	3.2mV	175A	DO7
154	1N4371	10	2.7	400m	20m	30		175J	DO7
155	GSZ2.7	10	2.7	400m	20m	30			A69a
156	K270	10	2.7	400m§	10m	17	3.2mV	175A	DO7
157	05Z2.7		2.7	500m	10m	150	10	175J	DO35
158	BZY88C2V7		2.7	500m	5.0m	83	-6	175J	DO35
159	GZA2.7		2.7	500m		45 †	10		A159
160	1N5986D	1	2.7	500m	5.0m	100	7.5	200J	DO35
161	Z0A2.7	1†	2.7	500m	5.0m	50 †	9.0	200J	DO29
162	1N5986C	2	2.7	500m	5.0m	100	7.5	200J	DO35
163	HZ3HA2	4	2.7	500m	5.0m	100	2.0mV	175J	DO35
164	1N5223B	5	2.7	500m	20m	30	8.0	200A	A398a
165	1N5986B	5	2.7	500m	5.0m	100		200J	DO35
166	BZX46C2V7	5	2.7	500m	20m	30	8.0	175A	DO35
167	BZX55C2V7	5	2.7	500m	5.0m	75	7.0	175A	DO35
168	BZX83C2V7	5	2.7	500m	5.0m	90	7.0	175A	DO35
169	MLL5223B	5.0	2.7	500m§	20m	30	8.0	200J	F140
170	RD2.7EB	5	2.7	500m	20m	100	6.2	175J	DO35
171▼	SZ.5-2.7-5-25	5.0	2.7	500m	25M			175	u5a
172	Z0B2.7	5†	2.7	500m	5.0m	50 †	9.0	200J	DO29
173	ZPD2V7	5†	2.7	500m	5.0m	500	1.8mV	175J	DO35
174	ZPD2.7	5	2.7	.50	5.0m	83	6.5	175J	DO35
175	BZX97C2V7	7	2.7	500m	5.0m	85	7.0	175J	DO35
176	ZMM2.7	7†	2.7	500m	5.0m	83	6.5	175J	F135
177	BZV55C2V7	7.4	2.7	500m	5.0m	100	2.0	200J	F139
178	BZV60C2V7	7.4	2.7	500m	5.0m	100	2.0	200J	DO34
179	1N3395	10	2.7	500m	50m	10	10	200S	P5
180	1N5223A	10	2.7	500m	20m	30	8.0	200A	A398a
181	1N5839A	10	2.7	500m	20m	50		150C	M859
182	1N5986A	10	2.7	500m	5.0m	110		200J	DO35
183	MLL5223A	10	2.7	500m§	20m	30	8.0	200J	F140
184▼	SZ.5-2.7-10-25	10	2.7	500m	25m			175	u5a
185	1N5223	20†	2.7	.50	20m			200A	A398a
186	1N5986	20	2.7	500m	5.0m	110		200J	DO35
187	MLL5223	20	2.7	500m§	20m	30		200J	F140
188▼	SZ.5-2.7-20-25	20	2.7	500m	25m			175	u5a
189	BZV41C2V7	5	2.7	750m	5.0m	120	7.0	175S	A412
190	MLV4371A	5	2.7	750m	20m	30		175A	A2j
191	HZ2.7PB		2.7	800m	40m	15		175J	DO41
192	SZ2.7	2†	2.7	1.0	20m	16 †	5.5	150A	A3g
193	BZX85C2V7	5	2.7	1.0 §	80m	15	8.0	150A	DO41
194▼	SZ1-2.7-5-25	5.0	2.7	1.0	25m			175	u5b
195	Z2.7	5†	2.7	1.0	20m	18 †	7.5	150A	DO41
196	RD2.7FB	7	2.7	1.0	40m	15		175J	A297c
197▼	SZ1-2.7-10-25	10	2.7	1.0	25m			175	u5b
198▼	SZ1-2.7-20-25	20	2.7	1.0	25m			175	u5b
199	BZW22C2V7	5	2.7	1.3	100m	20		175S	DO41

SYMBOLS AND CODES EXPLAINED IN INTERPRETER

2. VOLTAGE REFERENCE DIODES - $V_Z \geq 2.5$ V (Cont'd)

IN ORDER OF: (1) REF. VOLTAGE (2) PD MAX (3) TOLERANCE & (4) TYPE NUMBER

LINE No.	4 TYPE No.	3 TOL ± (%)	1 NOM. REF. VOLT. (V)	2 PD @ 25°C MAX (W)	TEST CUR. Izt (A)	DYN. IMP. MAX (Ω)	TEMP. COEFF Tc MAX	TEMP MAX (°C)	DWG. NO.
1▼	SZ3-2.7-5-25								
		5.0	2.7	5.0	25m			175	u5c
2▼	SZ3-2.7-10-25								
		10	2.7	5.0	25m			175	u5c
3▼	SZ3-2.7-20-25								
		10	2.7	5.0	25m			175	u5c
4	RD2.7EL		2.72	500m	1.0m	100		175J	A277b
5	RD2.7EN		2.72	500m	5.0m	100		175J	A277b
6	BZY88C3V3	5	2.75	400m	5.0m	110	7.2	200J	DO7
7	RD2.7MB2	5	2.8	200m	5.0m	110		150	
8	C6044M*		2.80	250m	3.0m	48 †		175A	A2
9	C6052M*		2.80	250m	3.0m	48 †		175A	A2
10	BZ102-2V8	7	2.8	250m	5.0m	40	23	150J	DO7
11	C6044*		2.80	400m	3.0m	48 †		175A	DO7
12	C6052*		2.80	400m	3.0m	48 †		175A	DO7
13	HZ3A3	4	2.8	400m	5.0m	100	2.0mV	175J	DO35
14	BZX75C2V8	5	2.8	400m§	10m	20	23	175J	DO7
15	CD5224B	5	2.8	400m	20m	30	8.0	200J	u39a
16	CH5224	5	2.8	400m	20m	30	8.0	200J	u10
17	RD2.7EB2		2.80	500m	20m	100		175J	A277b
18	RD2.7EL2		2.80	500m	1.0m	100		175J	A277b
19	RD2.7EN2		2.80	500m	5.0m	100		175J	A277b
20	HZ3HA3	4	2.8	500m	5.0m	100	2.0mV	175J	DO35
21	1N5224B	5	2.8	500m	20m	30	8.0	200A	A398a
22	CD28	5	2.8	500m	20m	50		200J	DO7
23	MLL5224B	5.0	2.8	500m§	20m	30	8.0	200J	F140
24	1N5224A	10	2.8	500m	20m	30	8.0	200A	A398a
25	1N5840A	10	2.8	500m	20m	50		150C	M859
26	MLL5224A	10	2.8	500m§	20m	30	8.0	200J	F140
27	1N5224	20†	2.8	.50	20m			200A	A398a
28	MLL5224	20	2.8	500m§	20m	30		200J	F140
29	LNA328B	2	2.8	600m	20m	50		175A	DO7
30	GLA28,A,B	5†	2.8	600m	20m	50	6.5	175	DO7
31	LNA328A	5	2.8	600m	20m	50		175A	DO7
32	LNA328	10	2.8	600m	20m	50		175A	DO7
33	MLNA328B	2	2.8	750m	20m	50		175A	A249e
34	MGLA28,A,B	5†	2.8	750m	20m	50	6.5	175A	A249e
35	MLNA328A	5	2.8	750m	20m	50		175A	A249e
36	MLNA328	10	2.8	750m	20m	50		175A	A249e
37	RD2.7FB2		2.80	1.0	40m	15		175J	A277r
38	HZ2.7EB2	4.8	2.81	500m	20m	100		175J	DO35
39	PS1177,A	5†	2.85	1.0	10m	40	23	150A	A1gd
40	1N372	15	2.9		15m			150A	A1er
41	RD3.0MB1	4	2.9	200m	5.0m	120		150	
42	HZ3B1	3	2.9	400m	5.0m	100	2.0mV	175J	DO35
43	HZ3HB1	3	2.9	500m	5.0m	100	2.0mV	175J	DO35
44	RD2.7EC	5	2.9	500m	20m	100	6.0	175J	DO35
45	HZ2.7PC		2.9	800m	40m	15		175J	DO41
46	RD2.7FC	6	2.9	1.0	40m	15		175J	A297c
47	RD3.0FB1		2.95	1.0	40m	15		175J	A277r
48	RD3.0EB1		2.96	500m	20m	80		175J	A277b
49	RD3.0EL1		2.96	500m	1.0m	80		175J	A277b
50	HZ3.0EB1	4.0	2.96	500m	20m	80		175J	DO35
51	TZPD3		3.0		5.0m	90	6.0		DO35
52	BZV49C3V0	5	3.0		5.0m	85	-8	150J	M1008
53	ND3V0	10	3.0		5.0m	120	7.0		u48
54	BZX84C3V0	5	3.0	200m	5.0m	85	6.0	150J	M500d
55	RD3.0MB	5.0	3.0	200m	5.0m	120		150J	M500c
56	SZ102/3V0*	7	3.0	200m	5.0m			150J	M901
57	HZ3LLB		3.0	250m	500u	360		175J	DO35
58	1N4619	5	3.0	.25	.25m	1.6k		200	DO14
59	1N4683	5	3.0	.25	.05m			200A	DO14
60	PD6001,A	5†	3.0	.25	10m	60		150	A109
61	PD6042	5	3.0	.25	10m	45		150	A2c
62	1/4M3.0AZ10								
		10†	3.0	250m	10m	55		175J	E204h
63	BZX88C3V0	5	3.0	300m	5.0m	120	7.0	175S	A412
64	ZTE3	13	3.0	350m	5.0m	20	30	150J	DO35
65	MA4030	5	3.0	370m	5.0m	100	3.5	200J	DO34
66	Z5A3.0	1†	3.0	400m§	5.0m	80	7.0	200J	DO7
67	BZX79B3V0	2	3.0	400m§	5.0m	95	2.1mV	200J	DO35
68	HZ3B2	3	3.0	400m	5.0m	100	2.0mV	175J	DO35
69	1N4372A	5	3.0	400m	20m	29		175J	DO7
70	1S2030A	5	3.0	.40	5.0m	200	7.0	150A	A1
71	1S7030A	5	3.0	.40	5.0m	200	7.0	175A	A1
72	BZX79C3V0	5	3.0	400m§	5.0m	95	2.1mV	200J	DO35
73	BZX96C3	5	3.0	400m	5.0m	80	6.5	150J	DO7
74	BZY88C3V0	5	3.0	400m	5.0m	120	8.0	200J	DO7
75	BZY88C3V6	5	3.0	400m	5.0m	105	5.5	200J	DO7
76	CD4372A	5	3.0	400m	20m	29	7.5	200J	u39a
77	CD4619	5	3.0	400m	250u	1.6k	7.5	200J	u39a
78	CD5225B	5	3.0	400m	20m	29	7.5	200J	u39a
79	CH4372	5	3.0	400m	20m	29	7.5	200J	u10
80	CH4619	5	3.0	400m	250u	1.6k	7.5	200J	u10
81	CH5225	5	3.0	400m	20m	29	7.5	200J	u10
82	GSZ3.0A	5	3.0	400m	20m	29			A69a
83	K300A	5	3.0	400m§	10m	17	3.2mV	175A	DO7
84	MA1030	5	3.0	400m	5.0m	100	3.5	200J	A24D
85	Z5B3.0	5†	3.0	400m§	5.0m	80	7.0	200J	DO7
86	1N4372	10	3.0	400m	20m	29		175J	DO7
87	GSZ3.0	10	3.0	400m	20m	29			A69a
88	K300	10	3.0	400m§	10m	17	3.2mV	175A	DO7
89	05Z3.0		3.0	500m	10m	120	9.5	175J	DO35
90	GZA3.0		3.0	500m		43 †	9.5		A159
91	1N5987D	1	3.0	500m	5.0m	95	7.0	200J	DO35
92	SV3145B*	1	3.00	500m	10m	40	16	150A	A1hd
93	Z0A3.0	1†	3.0	500m	5.0m	50 †	9.0	200J	DO29
94	1N5987C	2	3.0	500m	5.0m	95	7.0	200J	DO35
95	SV3145A*	2	3.00	500m	10m	40	16	150A	A1hd
96	HZ3HB2	3	3.0	500m	5.0m	100	2.0mV	175J	DO35
97	1N5225B	5	3.0	500m	20m	29	7.5	200A	A398a
98	1N5987B	5	3.0	500m	5.0m	95		200J	DO35
99	BZX46C3V	5	3.0	500m	20m	28	6.0	175A	DO35
100	BZX46C3V0	5	3.0	500m	20m	29	8.0	175A	DO35
101	BZX55C3V	5	3.0	500m	5.0m	85	7.0	175A	DO35
102	BZX55C3V0	5	3.0	500m	5.0m	80	7.0	175A	DO35
103	BZX79C3V	5	3.0	500m	5.0m	95	35	200J	DO35
104	BZX83C3V0	5	3.0	500m	5.0m	90	-7	175A	DO35
105	CTZ3.0A	5	3.0	500m	20m	240	660	200	DO35
106	MLL5225B	5.0	3.0	500m§	20m	29	7.5	200J	F140
107	MZ303,A,B,C								
		5	3.0	500m	10m	50	3.1	175J	DO35
108	PS8900	5	3.0	.50	20m	24	7.5	150	A60p
109	RD3.0EB	5	3.0	500m	20m	80	5.5	175J	DO35
110	SV3145	5	3.0	500m	10m	40	16	150A	A1hd
111▼	SZ.5-3.0-5-25								
		5.0	3.0	500m	25M			175	u5a
112	Z0B3.0	5†	3.0	500m	5.0m	50 †	9.0	200J	DO29
113	ZPD3	5	3.0	.50	5.0m	90	6.0	175J	DO35
114	ZMM3	6†	3.0	500m	5.0m	95	6.0	175J	F135
115	BZV55C3V0	6.6	3.0	500m	5.0m	95	2.1	200J	F139
116	BZX97C3V0	7	3.0	500m	5.0m	85	7.0	175J	DO35
117	BZV60C3V0	7.1	3.0	500m	5.0m	95	2.1	200J	DO34
118	1N5225A	10	3.0	500m	20m	29	7.5	200A	A398a
119	1N5841A	10	3.0	500m	20m	50		150C	M859
120	1N5987A	10	3.0	500m	5.0m	100		200J	DO35
121	CTZ3.0	10	3.0	500m	20m	240	660	200	DO35
122	MLL5225A	10	3.0	500m§	20m	29	7.5	200J	F140
123▼	SZ.5-3.0-10-25								
		10	3.0	500m	25m			175	u5a
124	1N5225	20†	3.0	.50	20m			200A	A398a
125	1N5987	20	3.0	500m	5.0m	100		200J	DO35
126	MLL5225	20	3.0	500m§	20m	29		200J	F140
127▼	SZ.5-3.0-20-25								
		20	3.0	500m	25m			175	u5a
128	BZV41C3V0	5	3.0	750m	5.0m	120	7.0	175S	A412
129	MLV4372A	5	3.0	750m	20m	30		175A	A2j
130	HZ3.0PB		3.0	800m	40m	15		175J	DO41
131	Z4A3.0	1†	3.0	1.0	100m	4.0	8.0	200J	DO29
132	SZ3.0	2†	3.0	1.0	20m	17 †	5.5	150A	A3g
133	BZX85C3V0	5	3.0	1.0 §	80m	20	8.0	150A	DO41
134▼	SZ1-3.0-5-25								
		5.0	3.0	1.0	25m			175	u5b
135	Z3.0	5†	3.0	1.0	20m	18 †	7.0	150A	DO41
136	Z4B3.0	5†	3.0	1.0	100m	4.0	8.0	200J	DO29
137	RD3.0FB	6	3.0	1.0	40m	15		175J	A297c
138▼	SZ1-3.0-10-25								
		10	3.0	1.0	25m			175	u5b
139	AW03-03	20	3.0	1.0	60m	15	7.0	150J	A277n
140▼	SZ1-3.0-20-25								
		20	3.0	1.0	25m			175	u5b
141	BZW22C3V0	5	3.0	1.3	100m	20		175S	DO41
142	Z2B3.0	5†	3.0	2.5	100m	4.0	8.0	200J	DO1
143▼	SZ3-3.0-5-25								
		5.0	3.0	5.0	25m			175	u5c
144▼	SZ3-3.0-10-25								
		10	3.0	5.0	25m			175	u5c
145▼	SZ3-3.0-20-25								
		10	3.0	5.0	25m			175	u5c
146	RD3.0EL		3.04	500m	1.0m	80		175J	A277b
147	RD3.0EN		3.04	500m	5.0m	80		175J	A277b
148	RD3.0FB2		3.09	1.0	40m	15		175J	A277r
149	RD3.0MB2	4	3.1	200m	5.0m	120		150	
150	HZ3B3	3	3.1	400m	5.0m	100	2.0mV	175J	DO35
151	HZ3HB3	3	3.1	500m	5.0m	100	2.0mV	175J	DO35
152	CD31	5	3.1	500m	20m	30		200J	DO7
153	LNA331B	2	3.1	600m	20m	30		175A	DO7
154	GLA31,A,B	5†	3.1	600m	20m	30	6.3	175	DO7
155	LNA331A	5	3.1	600m	20m	30		175A	DO7
156	LNA331	10	3.1	600m	20m	30		175A	DO7
157	MLNA331B	2	3.1	750m	20m	30		175A	A249e
158	MGLA31,A,B	5†	3.1	750m	20m	30	6.3	175A	A249e
159	MLNA331A	5	3.1	750m	20m	30		175A	A249e
160	MLNA331	10	3.1	750m	20m	30		175A	A249e
161	RD3.0EB2		3.11	500m	20m	80		175J	A277b
162	RD3.0EL2		3.11	500m	1.0m	80		175J	A277b
163	RD3.0EN2		3.11	500m	5.0m	80		175J	A277b
164	HZ3.0EB2	4.3	3.12	500m	20m	80		175J	DO35
165	RD3.3MB1	4	3.2	200m	5.0m	130		150	
166	BZX79B3V3	2	3.2	400m§	5.0m	95	2.4mV	200J	DO35
167	HZ3C1	3	3.2	400m	5.0m	100	2.0mV	175J	DO35
168	HZ3HC1	3	3.2	500m	5.0m	100	2.0mV	175J	DO35
169	RD3.0EC	5	3.2	500m	20m	80	5.3	175J	DO35
170	HZ3.0PC		3.2	800m	40m	15		175J	DO41
171	RD3.0FC	6	3.2	1.0	40m	15		175J	A297c
172	RD3.3FB1		3.25	1.0	40m	15		175J	A277r
173	RD3.3EB1		3.27	500m	20m	70		175J	A277b
174	RD3.3EL1		3.27	500m	1.0m	70		175J	A277b
175	RD3.3EN1		3.27	500m	5.0m	70		175J	A277b
176	HZ3.3EB1	3.6	3.27	500m	20m	70		175J	DO35
177	TZPD3.3		3.3		5.0m	90	6.0		DO35
178	BZV49C3V3	5	3.3		5.0m	85	-8	150J	M1008
179	CD4728A	5.0	3.3		76m	10		200	u52
180	CD5333B	5	3.3		380m	3.0	6.7	200J	u39b
181	ND3V3	10	3.3		5.0m	110	6.0		u48
182	RD3.3MB		3.3	200m	5.0m	130		150J	M500c
183	1N466B	1	3.3	200m	5.0m	55 †		150S	C1
184	1N466A	5	3.3	200m	5.0m	55 †		150S	C1
185	1N471A	5	3.3	200m	5.0m	65 †		150S	C1
186	BZX84C3V3	5	3.3	200m	5.0m	85	6.0	150J	M500d
187	HZ3LLC		3.3	250m	500u	360		175J	DO35
188	ST41*		3.3	.25	100m	6 †		150	DO7
189	1N4620	5	3.3	250m	250u	1.6k		200A	DO14
190	1N4684	5	3.3	.25	.05m			200A	DO14
191	PD6002,A	5†	3.3	.25	10m	55		150	A109
192	PD6043	5	3.3	.25	10m	45		150	A2c
193	1/4M3.3AZ10								
		10†	3.3	250m	10m	55		175J	E204h
194	02BZ3.3	15	3.3	250m	10m	30	7.0	175J	DO35
195	BZX88C3V3	5	3.3	300m	5.0m	110	6.0	175S	A412
196	C5D5226	10	3.3	320m	20m			150S	M713a
197	ZTE3.3	12	3.3	350m	5.0m	20	30	150J	DO35
198	MA4033	5	3.3	370m	5.0m	100	3.5	200J	DO34
199	1N5518D	1	3.3	400m§	20m	26		175A	DO7
200	Z5A3.3	1†	3.3	400m§	5.0m	80	7.0	200J	DO7
201	1N5518C	2	3.3	400m§	20m	26		175A	DO7
202	HZ3C2	3	3.3	400m	5.0m	100	2.0mV	175J	DO35
203	1N746A	5	3.3	400m	20m	28	6.2	175A	A1
204	1N3506	5	3.3	.40	20m	24	6.2	200A	DO7
205	1N5518B	5	3.3	400m§	20m	26		175A	DO7

SYMBOLS AND CODES EXPLAINED IN INTERPRETER

2. VOLTAGE REFERENCE DIODES - $V_Z \geq 2.5$ V (Cont'd)

IN ORDER OF: (1) REF. VOLTAGE (2) PD MAX (3) TOLERANCE & (4) TYPE NUMBER

LINE No.	4 TYPE No.	3 TOL ± (%)	1 NOM. REF. VOLT. (V)	2 PD @ 25°C MAX (W)	TEST CUR. Izt (A)	DYN. IMP. MAX (Ω)	TEMP. COEFF Tc MAX	TEMP MAX (°C)	DWG. NO.
1	1S2033A	5	3.3	.40	5.0m	120	7.0	150A	A1
2	1S7033A	5	3.3	.40	5.0m	100	7.0	175A	A1
3	BZX79C3V3	5	3.3	400m§	5.0m	95	2.4mV	200J	DO35
4	BZX96C3V3	5	3.3	400m	5.0m	80	6.0	150J	DO7
5	BZY88C3V9	5	3.3	400m	5.0m	100	5.2	200J	DO7
6	CD746A	5	3.3	400m	20m	28	7.0	200J	u39a
7	CD4620	5	3.3	400m	250u	1.6k	7.5	200J	u39a
8	CD5226B	5	3.3	400m	20m	28	7.0	200J	u39a
9	CH746	5	3.3	400m	20m	24	7.0	200J	u10
10	CH4620	5	3.3	400m	250u	1.6k	7.5	200J	u10
11	CH5226	5	3.3	400m	20m	28	7.0	200J	u10
12	GSZ3.3A	5	3.3	400m	20m	24			A69a
13	K330A	5	3.3	400m§	10m	17	3.2mV	175A	DO7
14	MA1033	5	3.3	400m	5.0m	100	3.5	200J	A24D
15	Z5B3.3	5†	3.3	400m§	5.0m	80	7.0	200J	DO7
16	ZMM746A	5.0	3.3	400m§	20m	28	6.2	175J	F139
17	1N746	10	3.3	400m	20m	28	6.2	175A	A1
18	1N5518A	10	3.3	400m§	20m			175A	DO7
19	1S2033	10	3.3	.40	5.0m	150	7.0	150A	A1
20	1S7033	10	3.3	.40	5.0m	150	7.0	150A	A1
21	GSZ3.3	10	3.3	400m	20m	24			A69a
22	K330	10	3.3	400m§	10m	17	3.2mV	175A	DO7
23	ZMM746	10	3.3	400m§	20m	28	6.2	175J	F139
24	1S7033B	15	3.3	.40	5.0m	200	7.0	150A	A1
25	1N5518	20	3.3	400m§	20m			175A	DO7
26	05Z3.3		3.3	500m	10m	100	9.0	175J	DO35
27	GZA3.3		3.3	500m		41 †	9.0		A159
28	1N5988D	1	3.3	500m	5.0m	95		200J	DO35
29	Z0A3.3	1†	3.3	500m	5.0m	50 †	9.0	200J	DO29
30	1N5988C	2	3.3	500m	5.0m	95		200J	DO35
31	HZ3HC2	3	3.3	500m	5.0m	100	2.0mV	175J	DO35
32	1N5226B	5	3.3	500m	20m	24	7.0	200A	A398a
33	1N5842B	5	3.3	500m	20m	50		150C	M859
34	1N5988B	5	3.3	500m	5.0m	95		200J	DO35
35	BZX46C3V3	5	3.3	500m	20m	28	8.0	175A	DO35
36	BZX55C3V3	5	3.3	500m	5.0m	85	6.0	175A	DO35
37	BZX83C3V3	5	3.3	500m	5.0m	90	-6	175A	DO35
38	CTZ3.3A	5	3.3	500m	20m	220	660	200	DO35
39	MLL5226B	5.0	3.3	500m§	20m	28	7.0	200J	F140
40	PS8901	5	3.3	.50	20m	24	7.3	150	A60p
41	RD3.3EB	5	3.3	500m	20m	70	5.1	175J	DO35
42▼	SZ.5-3.3-5-25								
		5.0	3.3	500m	25M			175	u5a
43	Z0B3.3	5†	3.3	500m	5.0m	50 †	9.0	200J	DO29
44	ZMM5226B	5.0	3.3	500m§	20m	28	7.0	200J	F139
45	ZPD3V3	5†	3.3	500m	5.0m	500	1.8mV	175J	DO35
46	ZPD3.3	5	3.3	.50	5.0m	90	5.5	175J	DO35
47	BZV55C3V3	6.0	3.3	500m	5.0m	95	2.4	200J	F139
48	BZX97C3V3	6	3.3	500m	5.0m	85	6.0	175J	DO35
49	ZMM3.3	6†	3.3	500m	5.0m	95	5.5	175J	F135
50	BZV60C3V3	6.4	3.3	500m	5.0m	95	2.4	200J	DO34
51	1N3396	10	3.3	500m	30m	25	10	200S	P5
52	1N5226A	10	3.3	500m	20m	24	7.0	200A	A398a
53	1N5842A	10	3.3	500m	20m	50		150C	M859
54	1N5988A	10	3.3	500m	5.0m	100		200J	DO35
55	CTZ3.3	10	3.3	500m	20m	220	660	200	DO35
56	MLL5226A	10	3.3	500m§	20m	28	7.0	200J	F140
57▼	SZ.5-3.3-10-25								
		10	3.3	500m	25m			175	u5a
58	ZMM5226A	10	3.3	500m§	20m	28	7.0	200J	F139
59	1N5226	20†	3.3	.50	20m			200A	A398a
60	1N5988	20	3.3	500m	5.0m	100		200J	DO35
61	MLL5226	20	3.3	500m§	20m	28		200J	F140
62▼	SZ.5-3.3-20-25								
		20	3.3	500m	25m			175	u5a
63	ZMM5226	20	3.3	500m§	20m	28	7.0	200J	F139
64	BZV41C3V3	5	3.3	750m	5.0m	110	6.0	175S	A412
65	MLV746A	5	3.3	750m	20m	24		175A	A2j
66	AP3.3A,B		3.3	1.0 †	20m	40			DO35
67	TSC4728CHIP								
			3.3	1.0	76m	10			u46
68	Z4A3.3	1†	3.3	1.0	100m	4.0	7.0	200J	DO29
69	SZ3.3	2†	3.3	1.0	20m	17 †	5.4	150A	A3g
70	1N3821A	5	3.3	1.0	76m	10	7.5	175A	A31a
71	1N4649	5	3.3	1.0	76m	400	7.5	200A	DO15
72	1N4728A	5	3.3	1.0	76m	10		200A	DO41
73	APD3.3A,B	5†	3.3	1.0 †	76m	15			A1rx
74	BZX85C3V3	5	3.3	1.0 §	80m	20	-6	150A	DO41
75	CD4728	5	3.3	1.0	75m	10	6.6	200J	u39a
76	CH4728	5	3.3	1.0	76m	10	6.6	200J	u10
77	PL3V3Z	5	3.3	1.0	100m	10	6.0	150J	
78▼	SZ1-3.3-5-25								
		5.0	3.3	1.0	25m			175	u5b
79	Z3.3#B	5†	3.3	1.0	20m	19 †	6.0	150A	DO41
80	Z4B3.3	5†	3.3	1.0	100m	4.0	7.0	200J	DO29
81	ZB3.3B	5	3.3	1.0	76m	400			A1ty
82	RD3.3FB	6	3.3	1.0	40m	15		175J	A297c
83	1N3821	10	3.3	1.0	76m	10	7.5	175A	A1bx
84	1N4728	10	3.3	1.0	76m	10		200A	DO41
85	KS433A	10	3.3	1.0	30m	25 †	5.0	100C	A378
86▼	SZ1-3.3-10-25								
		10	3.3	1.0	25m			175	u5b
87	ZB3.3A	10	3.3	1.0	76m	400			A1ty
88▼	SZ1-3.3-20-25								
		20	3.3	1.0	25m			175	u5b
89	ZB3.3	20	3.3	1.0	76m	400			A1ty
90	BZY97C3V3	5	3.3	1.3	100m	10	10		A1rx
91	BZD10C3V3	6	3.3	1.3	100m	10	10		DO13
92	BZW22C3V3	6	3.3	1.3	100m	10	10		DO41
93	1N5913D	1	3.3	1.5	113m	10		200J	DO41
94	1N5913C	2	3.3	1.5	113m	10		200J	DO41
95	1N5913B	5	3.3	1.5	113m	10		200J	DO41
96	1N5913A	10	3.3	1.5	113m	10		200J	DO41
97	1N5913	20	3.3	1.5	113m	10		200J	DO41
98	BZV47C3V3	5	3.3	2.0	100m	10	6.0	175J	A344r
99	LMZ3.3A	5	3.3	2.0	151m	6.0	7.5	150A	DO41
100	ZBC3.3B	5	3.3	2.0	142m	10			A1ty
101	LMZ3.3	10	3.3	2.0	151m	6.0	7.5	150A	DO41
102	ZBC3.3A	10	3.3	2.0	142m	10			A1ty
103	ZBC3.3	20	3.3	2.0	142m	10			A1ty
104	1N5008A	5	3.3	2.5	189m	6.0	6.6	150	A1gn
105	Z2B3.3	5†	3.3	2.5	100m	4.0	7.0	200J	DO1
106	1N5008	10	3.3	2.5	189m	6.0	6.6	150	A1gn
107	BZV16C3V3	5	3.3	3.0	150m	10	6.0	175J	DO13
108	ZCC3.3B	5	3.3	3.0	230m	4.0			A1ey
109	ZCC3.3A	10	3.3	3.0	230m	4.0			A1ey
110	ZCC3.3	20	3.3	3.0	230m	4.0			A1ey
111▼	SZ3-3.3-5-25								
		5.0	3.3	5.0	25m			175	u5c
112▼	SZ3-3.3-10-25								
		10	3.3	5.0	25m			175	u5c
113▼	SZ3-3.3-20-25								
		10	3.3	5.0	25m			175	u5c
114	RD3.3EL		3.34	500m	1.0m	70		175J	A277b
115	RD3.3EN		3.34	500m	5.0m	70		175J	A277b
116	RD3.3FB2		3.39	1.0	40m	15		175J	A277r
117	RD3.3MB2	4	3.4	200m	5.0m	130		150	
118	HZ3C3	3	3.4	400m	5.0m	100	2.0mV	175J	DO35
119	HZ3HC3	3	3.4	500m	5.0m	100	2.0mV	175J	DO35
120	RD3.3EB2		3.42	500m	20m	70		175J	A277b
121	RD3.3EL2		3.42	500m	1.0m	70		175J	A277b
122	RD3.3EN2		3.42	500m	5.0m	70		175J	A277b
123	HZ3.3EB2	3.6	3.43	500m	20m	70		175J	DO35
124	BZ102-3V4	7	3.45	250m	5.0m	50	23	150J	DO7
125	PS6466	13	3.45	.50	10m	55		200J	A1gd
126	1N373	10	3.5		10m			150A	A1er
127	RD3.6MB1	4	3.5	200m	5.0m	130		150	
128	1N703A	6.5	3.5	250m	5.0m	55		200A	A398
129	1N466	10	3.5	250m	5.0m	55 †		200A	C1
130	1N703	13	3.5	.25	10m	55		200A	A398
131	HZ4A1	3	3.5	400m	5.0m	100	2.1mV	175J	DO35
132	HZ4HA1	3	3.5	500m	5.0m	100	2.1mV	175J	DO35
133	CD35	5	3.5	500m	20m	20		200J	DO7
134	RD3.3EC	5	3.5	500m	20m	70	5.0	175J	DO35
135	LNA335B	2	3.5	600m	20m	20		175A	DO7
136	GLA35,A,B	5†	3.5	600m	20m	20	5.8	175	DO7
137	LNA335A	5	3.5	600m	20m	20		175A	DO7
138	LNA335	10	3.5	600m	20m	20		175A	DO7
139	MLNA335B	2	3.5	750m	20m	20		175A	A249e
140	MGLA35,A,B	5†	3.5	750m	20m	20	5.8	175A	A249e
141	MLNA335A	5	3.5	750m	20m	20		175A	A249e
142	MLNA335	10	3.5	750m	20m	20		175A	A249e
143	RD3.3FC	5	3.5	1.0	40m	15		175J	A297c
144	RD3.6FB1		3.55	1.0	40m	15		175J	A277r
145	RD3.6EB1		3.57	500m	20m	60		175J	A277b
146	RD3.6EL1		3.57	500m	1.0m	60		175J	A277b
147	RD3.6EN1		3.57	500m	5.0m	60		175J	A277b
148	HZ3.6EB1	3.5	3.58	500m	20m	60		175J	DO35
149	TZPD3.6		3.6		5.0m	90	6.0		DO35
150	BZV49C3V6	5	3.6		5.0m	85	-8	150J	M1008
151	CD4729A	5.0	3.6		69m	10		200	u52
152	CD5334B	5	3.6		350m	2.5	6.2	200J	u39b
153	MMBZ5227	5	3.6		20m	24			M500
154	ND3V6	10	3.6		5.0m	105	7.0		u48
155	BZ3.6	5	3.6	.15	5.0m	110		170A	DO7
156	RD3.6MB		3.6	200m	5.0m	130		150J	M500c
157	BZX84C3V6	5	3.6	200m	5.0m	85	6.0	150J	M500d
158	PTC501	10	3.6	248m†	69m	10			A1bc
159	HZ4LLA		3.6	250m	500u	370		175J	DO35
160	1N4621	5	3.6	.25	.25m	1.7k		200	DO14
161	1N4685	5	3.6	.25	.05m			200A	DO14
162	PD6003,A	5†	3.6	.25	10m	55		150	A109
163	PD6044	5	3.6	.25	10m	44		150	A2c
164	1/4M3.6AZ10								
		10†	3.6	250m	10m	50		175J	E204h
165	BZX88C3V6	5	3.6	300m	5.0m	105	7.0	175S	A412
166	C5D5227	10	3.6	320m	20m			150S	M713a
167	ZTE3.6	11	3.6	350m	5.0m	25	30	150J	DO35
168	MA4036	5	3.6	370m	5.0m	100	3.5	200J	DO34
169	1N5519D	1	3.6	400m§	20m	24		175A	DO7
170	Z5A3.6	1†	3.6	400m§	5.0m	80	7.0	200J	DO7
171	1N5519C	2	3.6	400m§	20m	24		175A	DO7
172	BZX79B3V6	2	3.6	400m§	5.0m	90	2.4mV	200J	DO35
173	HZ4A2	3	3.6	400m	5.0m	100	2.1mV	175J	DO35
174	1N747A	5	3.6	400m	20m	24	5.5	175A	A1
175	1N3507	5	3.6	.40	20m	22	5.5	200A	DO7
176	1N5519B	5	3.6	400m§	20m	24		175A	DO7
177	1S2036A	5	3.6	.40	5.0m	110	6.0	150A	A1
178	1S7036,B	5†	3.6	.40	5.0m	120	6.0	150A	A1
179	1S7036A	5	3.6	.40	5.0m	95	6.0	175A	A1
180	BZX75C3V6	5	3.6	400m§	10m	25	22	175J	DO7
181	BZX79C3V6	5	3.6	400m§	5.0m	90	2.4mV	200J	DO35
182	BZY88C4V3	5	3.6	400m	5.0m	90	4.1	200J	DO7
183	CD747A	5	3.6	400m	20m	24	6.0	200J	u39a
184	CD4621	5	3.6	400m	250u	1.7k	6.5	200J	u39a
185	CD5227B	5	3.6	400m	20m	24	6.5	200J	u39a
186	CH747	5	3.6	400m	20m	22	6.5	200J	u10
187	CH4621	5	3.6	400m	250u	1.7k	6.5	200J	u10
188	CH5227	5	3.6	400m	20m	24	6.5	200J	u10
189	GSZ3.6A	5	3.6	400m	20m	24			A69a
190	K360A	5	3.6	400m§	10m	17	3.2mV	175A	DO7
191	MA1036	5	3.6	400m	5.6m	100	3.5	200J	A24D
192	Z5B3.6	5†	3.6	400m§	5.0m	80	7.0	200J	DO7
193	ZMM747A	5.0	3.6	400m§	20m	24	5.5	175J	F139
194	1N747	10	3.6	400m	20m	24	5.5	175A	A1
195	1N5519A	10	3.6	400m§	20m			175A	DO7
196	1S2036	10	3.6	.40	5.0m	120	6.0	150A	A1
197	GSZ3.6	10	3.6	400m	20m	24			A69a
198	K360	10	3.6	400m§	10m	17	3.2mV	175A	DO7
199	ZMM747	10	3.6	400m§	20m	24	5.5	175J	F139
200	1N5519	20	3.6	400m§	20m			175A	DO7
201	05Z3.6		3.6	500m	10m	90	8.5	175J	DO35
202	GZA3.6		3.6	500m		39 †	8.5		A159
203	1N5989D	1	3.6	500m	5.0m	90		200J	DO35
204	Z0A3.6	1†	3.6	500m	5.0m	45 †	9.0	200J	DO29
205	1N5989C	2	3.6	500m	5.0m	90		200J	DO35
206	HZ4HA2	3	3.6	500m	5.0m	100	2.1mV	175J	DO35
207	1N5227B	5	3.6	500m	20m	22	6.5	200A	A398a
208	1N5843B	5	3.6	500m	20m	48		150C	M859
209	1N5989B	5	3.6	500m	5.0m	90		200J	DO35

SYMBOLS AND CODES EXPLAINED IN INTERPRETER

2. VOLTAGE REFERENCE DIODES - $V_Z \geq 2.5$ V (Cont'd)

IN ORDER OF: (1) REF. VOLTAGE (2) PD MAX (3) TOLERANCE & (4) TYPE NUMBER

LINE No.	4 TYPE No.	3 TOL ± (%)	1 NOM. REF. VOLT. (V)	2 PD @ 25°C MAX (W)	TEST CUR. Izt (A)	DYN. IMP. MAX (Ω)	TEMP. COEFF Tc MAX	TEMP MAX (°C)	DWG. NO.
1	BZX46C3V6	5	3.6	500m	20m	24	8.0	175A	DO35
2	BZX55C3V6	5	3.6	500m	5.0m	85	7.0	175A	DO35
3	BZX83C3V6	5	3.6	500m	5.0m	90	-6	175A	DO35
4	CTZ3.6A	5	3.6	500m	20m	210	650	200	DO35
5	MLL5227B	5.0	3.6	500m§	20m	24	6.5	200J	F140
6	PS8902	5	3.6	.50	20m	22	6.5	150	A60p
7	RD3.6EB	5	3.6	500m	20m	60	4.5	175J	DO35
8	Z0B3.6	5†	3.6	500m	5.0m	45 †	9.0	200J	DO29
9	ZMM3.6	5†	3.6	500m	5.0m	95	5.5	175J	F135
10	ZMM5227B	5.0	3.6	500m§	20m	24	6.5	200J	F139
11	ZPD3V6	5†	3.6	500m	5.0m	500	2.0mV	175J	DO35
12	ZPD3.6	5	3.6	.50	5.0m	90	5.5	175J	DO35
13	BZV55C3V6	5.8	3.6	500m	5.0m	90	2.4	200J	F139
14	BZV60C3V6	5.8	3.6	500m	5.0m	90	2.4	200J	DO34
15	BZX97C3V6	6	3.6	500m	5.0m	85	6.0	175J	DO35
16	1N5227A	10	3.6	500m	20m	22	6.5	200A	A398a
17	1N5843A	10	3.6	500m	20m	48		150C	M859
18	1N5989A	10	3.6	500m	5.0m	95		200J	DO35
19	CTZ3.6	10	3.6	500m	20m	210	650	200	DO35
20	MLL5227A	10	3.6	500m§	20m	24	6.5	200J	F140
21▼	SZ.5-3.6-10-25								
		10	3.6	500m	25m			175	u5a
22	ZMM5227A	10	3.6	500m§	20m	24	6.5	200J	F139
23	1N5227	20†	3.6	.50	20m			200A	A398a
24	1N5989	20	3.6	500m	5.0m	95		200J	DO35
25	MLL5227	20	3.6	500m§	20m	24		200J	F140
26▼	SZ.5-3.6-20-25								
		20	3.6	500m	25m			175	u5a
27	ZMM5227	20	3.6	500m§	20m	24	6.5	200J	F139
28	BZV41C3V6	5	3.6	750m	5.0m	105	7.0	175S	A412
29	MLV747A	5	3.6	750m	20m	22		175A	A2j
30	HZ3.6PB		3.6	800m	40m	15		175J	DO41
31	AP3.6A,B		3.6	1.0 †	20m	40			DO35
32	TSC4729CHIP								
			3.6	1.0	69m	10			u46
33	Z4A3.6	1†	3.6	1.0	100m	4.0	6.0	200J	DO29
34	SZ3.6	2†	3.6	1.0	20m	17 †	5.0	150A	A3g
35	1N3822A	5	3.6	1.0	69m	10	6.5	175A	A31a
36	1N4650	5	3.6	1.0	69m	400	7.0	200A	DO15
37	1N4729A	5	3.6	1.0	69m	10		200A	DO41
38	APD3.6A,B	5†	3.6	1.0 †	69m	15			A1rx
39	BZV85C3V6	5	3.6	1.0	60	15	2.4mV	200J	A1jr
40	BZX85C3V6	5	3.6	1.0	60m	15	-6	150A	DO15
41	CD4729	5	3.6	1.0	69m	10	6.0	200J	u39a
42	CH4729	5	3.6	1.0	69m	10	5.8	200J	u10
43	PL3V6Z	5	3.6	1.0	100m	10	5.5	150J	A1bg
44	PR233-RT	5	3.6	1.0	6.9m	10 †			DO7
45	RD3.6FB	5	3.6	1.0	40m	15		175J	A297c
46▼	SZ1-3.6-5-25								
		5.0	3.6	1.0	25m			175	u5b
47	Z3.6#B	5†	3.6	1.0	20m	18 †	5.0	150A	DO41
48	Z4B3.6	5†	3.6	1.0	100m	4.0	6.0	200J	DO29
49	ZB3.6B	5	3.6	1.0	69m	10		100C	A1bc
50	ZM4729A	5.0	3.6	1.0 §	69m	10		200J	F139
51	1N3822	10	3.6	1.0	69m	10	6.5	175A	A31a
52	1N4729	10	3.6	1.0	69m	10		200A	DO41
53▼	SZ1-3.6-10-25								
		10	3.6	1.0	25m			175	u5b
54	ZB3.6A	10	3.6	1.0	69m	10		100C	A1ty
55	ZM4729	10	3.6	1.0 §	69m	10		200J	F139
56▼	SZ1-3.6-20-25								
		20	3.6	1.0	25m			175	u5b
57	ZB3.6	20	3.6	1.0	69m	10		100C	A1ty
58	BZY97C3V6	5	3.6	1.3	100m	10	8.0		A1rx
59	BZD10C3V6	6	3.6	1.3	100m	10	8.0		DO13
60	BZW22C3V6	6	3.6	1.3	100m	10	8.0		DO41
61	1N5914D	1	3.6	1.5	104m	9.0		200J	DO41
62	1N5914C	2	3.6	1.5	104m	9.0		200J	DO41
63	1N5914B	5	3.6	1.5	104m	9.0		200J	DO41
64	1N5914A	10	3.6	1.5	104m	9.0		200J	DO41
65	1N5914	20	3.6	1.5	104m	9.0		200J	DO41
66	2EZ3.6D5	5	3.6	2.0	139m	5.0		200J	A1ay
67	BZV47C3V6	5	3.6	2.0	100m	10	5.5	175J	A344r
68	LMZ3.6A	5	3.6	2.0	139m	5.5	7.0	150A	DO41
69	ZBC3.6B	5	3.6	2.0	138m	10			A1ty
70	2EZ3.6D10	10	3.6	2.0	139m	5.0		200J	A1ay
71	LMZ3.6	10	3.6	2.0	139m	5.5	7.0	150A	DO41
72	ZBC3.6A	10	3.6	2.0	138m	10			A1ty
73	2EZ3.6D	20	3.6	2.0	139m	5.0		200J	A1ay
74	ZBC3.6	20	3.6	2.0	138m	10			A1ty
75	1N5009A	5	3.6	2.5	173m	5.5	5.8	150	A1gn
76	Z2B3.6	5†	3.6	2.5	100m	4.0	6.0	200J	DO1
77	1N5009	10	3.6	2.5	173m	5.5	5.8	150	A1gn
78	BZV16C3V6	5	3.6	3.0	140m	10	5.5	175J	DO13
79	ZCC3.6B	5	3.6	3.0	210m	3.0			A1ey
80	ZCC3.6A	10	3.6	3.0	210m	3.0			A1ey
81	ZCC3.6	20	3.6	3.0	210m	3.0			A1ey
82▼	SZ3-3.6-5-25								
		5.0	3.6	5.0	25m			175	u5c
83▼	SZ3-3.6-10-25								
		10	3.6	5.0	25m			175	u5c
84▼	SZ3-3.6-20-25								
		20	3.6	5.0	25m			175	u5c
85	RD3.6EL		3.64	500m	1.0m	60		175J	A277b
86	RD3.6EN		3.64	500m	5.0m	60		175J	A277b
87	RD3.6MB2	3	3.7	200m	5.0m	130		150	
88	SZ102/3V7*	6	3.7	200m	5.0m			150J	M901
89	HZ4A3	3	3.7	400m	5.0m	100	2.1mV	175J	DO35
90	HZ4HA3	3	3.7	500m	5.0m	100	2.1mV	175J	DO35
91	RD3.6FB2		3.70	1.0	40m	15		175J	A277r
92	RD3.6EB2		3.72	500m	20m	60		175J	A277b
93	RD3.6EL2		3.72	500m	1.0m	60		175J	A277b
94	RD3.6EN2		3.72	500m	5.0m	60		175J	A277b
95	HZ3.6EB2	3.3	3.72	500m	20m	60		175J	DO35
96	RD3.9MB1	3	3.8	200m	5.0m	130		150	
97	HZ4B1	3	3.8	400m	5.0m	100	2.1mV	175J	DO35
98	HZ4HB1	3	3.8	500m	5.0m	100	2.1mV	175J	DO35
99	RD3.6EC	5	3.8	500m	20m	60	4.4	175J	DO35
100	HZ3.6PC		3.8	800m	40m	15		175J	DO41
101	RD3.6FC	5	3.8	1.0	40m	15		175J	A297c
102	RD3.9EB1		3.86	500m	20m	50		175J	A277b
103	RD3.9EL1		3.86	500m	1.0m	50		175J	A277b
104	RD3.9EN1		3.86	500m	5.0m	50		175J	A277b
105	RD3.9FB1		3.86	1.0	40m	15		175J	A277r
106	HZ3.9EB1	3.6	3.88	500m	20m	50		175J	DO35
107	1C3993		3.9		640m	2.0			u36
108	TZPD3.9		3.9		5.0m	90	5.0		DO35
109	TZPY3.9		3.9		100m	7.0	3.0		DO41
110	BZV49C3V9	5	3.9		5.0m	85	-7	150J	M1008
111	CD4730A	5.0	3.9		64m	9.0		200	u52
112	CD5335B	5	3.9		320m	2.0	5.7	200J	u39b
113	MMBZ5228	5	3.9		20m	23			M500
114	ND3V9	10	3.9		5.0m	100	5.5		u48
115	1N1981B	1	3.9	150m	5.0m	11	6.0	150	C1
116	1N1981A	5	3.9	150m	5.0m	11	6.0	150	C1
117	BZ3.9	5	3.9	.15	5.0m	100		170A	DO7
118	1N1981	10	3.9	150m	5.0m	11	6.0	150	C1
119	RD3.9MB		3.9	200m	5.0m	130		150J	M500c
120	1N1927B	1	3.9	200m	5.0m	11	6.0	150A	A82e
121	1N1927A	5	3.9	200m	5.0m	11	6.0	150A	A82e
122	BZX84C3V9	5	3.9	200m	5.0m	85	6.0	150J	M500d
123	1N1927	10	3.9	200m	5.0m	11	6.0	150A	A82e
124	HZ4LLB		3.9	250m	500u	370		175J	DO35
125	1N4622	5	3.9	250m	250u	1.6k		200A	DO14
126	1N4686	5	3.9	.25	.05m			200A	DO14
127	PD6004,A	5†	3.9	.25	10m	50		150	A109
128	PD6045	5	3.9	.25	10m	42		150	A2c
129	1/4M3.9AZ10								
		10†	3.9	250m	10m	50		175J	E204h
130	02BZ3.9	15	3.9	250m	10m	30	6.3	175J	DO35
131	BZX88C3V9	5	3.9	300m	5.0m	100	5.5	175S	A412
132	C5D5228	10	3.9	320m	20m			150S	M713a
133	ZTE3.9	11	3.9	350m	5.0m	25	30	150J	DO35
134	MA4039	5	3.9	370m	5.0m	100	3.5	200J	DO34
135	1N5520D	1	3.9	400m§	20m	22		175A	DO7
136	Z5A3.9	1†	3.9	400m§	5.0m	80	5.0	200J	DO7
137	1N5520C	2	3.9	400m§	20m	22		175A	DO7
138	BZX79B3V9	2	3.9	400m§	5.0m	90	2.5mV	200J	DO35
139	HZ4B2	3	3.9	400m	5.0m	100	2.1mV	175J	DO35
140	1N748A	5	3.9	400m	20m	23	4.9	175A	A1
141	1N3508	5	3.9	.40	20m	20	4.9	200A	DO7
142	1N5520B	5	3.9	400m§	20m	22		175A	DO7
143	1S2039A	5	3.9	.40	5.0m	100	5.0	150A	A1
144	1S7039,B	5†	3.9	.40	5.0m	110	5.0	150A	A1
145	1S7039A	5	3.9	.40	5.0m	100	5.0	150A	A1
146	BZX79C3V9	5	3.9	400m§	5.0m	90	2.5mV	200J	DO35
147	BZX96C3V9	5	3.9	400m	5.0m	80	5.0	150J	DO7
148	CD748A	5	3.9	400m	20m	23	5.0	200J	u39a
149	CD4622	5	3.9	400m	250u	1.6k	6.0	200J	u39a
150	CD5228B	5	3.9	400m	20m	23	6.0	200J	u39a
151	CH748	5	3.9	400m	20m	20	6.0	200J	u10
152	CH4622	5	3.9	400m	250u	1.6k	6.0	200J	u10
153	CH5228	5	3.9	400m	20m	23	6.0	200J	u10
154	GSZ3.9A	5	3.9	400m	20m	20			A69a
155	K390A	5	3.9	400m§	10m	17	3.2mV	175A	DO7
156	MA1039	5	3.9	400m	5.0m	100	3.5	200J	A24D
157	Z5B3.9	5†	3.9	400m§	5.0m	80	5.0	200J	DO7
158	ZMM748A	5.0	3.9	400m§	20m	23	4.9	175J	F139
159	1N748	10	3.9	400m	20m	23	4.9	175A	A1
160	1N5520A	10	3.9	400m§	20m			175A	DO7
161	1S2039	10	3.9	.40	5.0m	110	5.0	150A	A1
162	GSZ3.9	10	3.9	400m	20m	20			A69a
163	K390	10	3.9	400m§	10m	17	3.2mV	175A	DO7
164	ZMM748	10	3.9	400m§	20m	23	4.9	175J	F139
165	1N5520	20	3.9	400m§	20m			175A	DO7
166	05Z3.9		3.9	500m	10m	80	8.0	175J	DO35
167	GZA3.9		3.9	500m		38 †	8.0		A159
168	1N5990D	1	3.9	500m	5.0m	90		200J	DO35
169	Z0A3.9	1†	3.9	500m	5.0m	40 †	6.0	200J	DO29
170	1N5990C	2	3.9	500m	5.0m	90		200J	DO35
171	HZ4HB2	3	3.9	500m	5.0m	100	2.1mV	175J	DO35
172	HZ4HB3	3	3.9	500m	5.0m	100	2.1mV	175J	DO35
173	1N5228B	5	3.9	500m	20m	20	6.0	200A	A398a
174	1N5844B	5	3.9	500m	20m	40		150C	M859
175	1N5990B	5	3.9	500m	5.0m	90		200J	DO35
176	BZX46C3V9	5	3.9	500m	20m	23	7.0	175A	DO35
177	BZX55C3V9	5	3.9	500m	5.0m	80	5.5	175A	DO35
178	BZX83C3V9	5	3.9	500m	5.0m	85	-6	175A	DO35
179	BZX97C3V9	5	3.9	500m	5.0m	85	5.5	175J	DO35
180	CD39	5	3.9	500m	20m	15		200J	DO7
181	CTZ3.9A	5	3.9	500m	20m	200	500	200	DO35
182	MLL5228B	5.0	3.9	500m§	20m	23	6.0	200J	F140
183	PS8903	5	3.9	.50	20m	20	5.5	150	A60p
184	RD3.9EB	5	3.9	500m	20m	50	4.2	175J	DO35
185	Z0B3.9	5†	3.9	500m	5.0m	40 †	6.0	200J	DO29
186	ZMM3.9	5†	3.9	500m	5.0m	95	5.0	175J	F135
187	ZMM5228B	5.0	3.9	500m§	20m	23	6.0	200J	F139
188	ZPD3V9	5†	3.9	500m	5.0m	500	2.0mV	175J	DO35
189	ZPD3.9	5	3.9	.50	5.0m	90	5.0	175J	DO35
190	BZV55C3V9	5.4	3.9	500m	5.0m	90	2.5	200J	F139
191	BZV60C3V9	5.4	3.9	500m	5.0m	90	2.5	200J	DO34
192	1N3397	10	3.9	500m	30m	30	9.0	200S	P5
193	1N5228A	10	3.9	500m	20m	20	6.0	200A	A398a
194	1N5844A	10	3.9	500m	20m	40		150C	M859
195	1N5990A	10	3.9	500m	5.0m	95		200J	DO35
196	CTZ3.9	10	3.9	500m	20m	200	500	200	DO35
197	MLL5228A	10	3.9	500m§	20m	23	6.0	200J	F140
198▼	SZ.5-3.9-10-25								
		10	3.9	500m	25m			175	u5a
199	ZMM5228A	10	3.9	500m§	20m	23	6.0	200J	F139
200	1N5228	20†	3.9	.50	20m			200A	A398a
201	1N5990	20	3.9	500m	5.0m	95		200J	DO35
202	MLL5228	20	3.9	500m§	20m	23		200J	F140
203▼	SZ.5-3.9-20-25								
		20	3.9	500m	25m			175	u5a
204	ZMM5228	20	3.9	500m§	20m	23	6.0	200J	F139
205	LNA339B	2	3.9	600m	20m	15		175A	DO7
206	GLA39,A,B	5†	3.9	600m	20m	15	5.0	175	DO7
207	LNA339A	5	3.9	600m	20m	15		175A	DO7
208	LNA339	10	3.9	600m	20m	15		175A	DO7

SYMBOLS AND CODES EXPLAINED IN INTERPRETER

2. VOLTAGE REFERENCE DIODES - $V_Z \geq 2.5$ V (Cont'd)

IN ORDER OF: (1) REF. VOLTAGE (2) PD MAX (3) TOLERANCE & (4) TYPE NUMBER

LINE No.	4 TYPE No.	3 TOL ± (%)	1 NOM. REF. VOLT. (V)	2 PD @ 25°C MAX (W)	TEST CUR. Izt (A)	DYN. IMP. MAX (Ω)	TEMP. COEFF Tc MAX	TEMP MAX (°C)	DWG. NO.
1	MLNA339B	2	3.9	750m	20m	15		175A	A249e
2	1N1507A	5	3.9	.75	35m	15	4.0	200S	DO12
3	BZV41C3V9	5	3.9	750m	5.0m	100	5.5	175S	A412
4	MGLA39,A,B	5†	3.9	750m	20m	15	5.0	175A	A249e
5	MLNA339A	5	3.9	750m	20m	15		175A	A249e
6	MLV748A	5	3.9	750m	20m	20		175A	A2j
7	1N1507	10	3.9	.75	35m	15	4.0	200S	DO12
8	MLNA339	10	3.9	750m	20m	15		175A	A249e
9	HZ3.9PB		3.9	800m	40m	15		175J	DO41
10	AP3.9A,B		3.9	1.0 †	20m	40			DO35
11	TSC4730CHIP								
			3.9	1.0	64m	9.0			u46
12	Z4A3.9	1†	3.9	1.0	100m	4.0	5.0	200J	DO29
13	SZ3.9	2†	3.9	1.0	20m	17 †	4.5	150A	A3g
14	1N1518A	5	3.9	1.0	50m	10	4.0	200S	DO3
15	1N3823A	5	3.9	1.0	64m	9.0	5.5	175A	A31a
16	1N4651	5	3.9	1.0	64m	400	6.0	200A	DO15
17	1N4730A	5	3.9	1.0	64m	9.0		200A	DO41
18	APD3.9A,B	5†	3.9	1.0 †	64m	15			A1rx
19	BZV85C3V9	5	3.9	1.0	60	15	2.2mV	200J	A1jr
20	BZX85C3V9	5	3.9	1.0 §	60m	15	-5	150A	DO41
21	CD4730	5	3.9	1.0	64m	9.0	5.0	200J	u39a
22	CH4730	5	3.9	1.0	64m	9.0	4.6	200J	u10
23	PL3V9Z	5	3.9	1.0	100m	7.0	4.0	150J	
24	RD3.9FB	5	3.9	1.0	40m	15		175J	A297c
25▼	SZ1-3.9-5-25								
		5.0	3.9	1.0	25m			175	u5b
26	Z3.9	5†	3.9	1.0	20m	15 †	4.0	150A	DO41
27	Z4B3.9	5†	3.9	1.0	100m	4.0	5.0	200J	DO29
28	ZB3.9B	5	3.9	1.0	58m	400			A1ty
29	ZM4730A	5.0	3.9	1.0 §	64m	9.0		200J	F139
30	1N1518	10	3.9	1.0	50m	10	4.0	200S	DO3
31	1N3823	10	3.9	1.0	64m	9.0	5.5	175A	A31a
32	1N4730	10	3.9	1.0	64m	9.0		200A	DO41
33	KS439A	10	3.9	1.0	30m	25 †	5.0	100C	A378
34▼	SZ1-3.9-10-25								
		10	3.9	1.0	25m			175	u5b
35	ZB3.9A	10	3.9	1.0	64m	400			A1ty
36	ZM4730	10	3.9	1.0 §	64m	9.0		200J	F139
37▼	SZ1-3.9-20-25								
		20	3.9	1.0	25m			175	u5b
38	ZB3.9	20	3.9	1.0	64m	400			A1ty
39	BZD10C3V9	5	3.9	1.3	100m	7.0	7.0		DO13
40	BZW22C3V9	5	3.9	1.3	100m	7.0	7.0		DO41
41	BZY97C3V9	5	3.9	1.3	100m	7.0	7.0		A1rx
42	ZD3.9	5	3.9	1.3	100	7.0	2.0	150J	DO13
43	ZMY3.9	5	3.9	1.3	100m	7.0	4	200J	F149
44	ZPY3.9	5	3.9	1.3	100m	7.0	2.0	200J	DO41
45	ZY3.9	5	3.9	1.3	100m	7.0	7.0	150J	A1bg
46	1N5915D	1	3.9	1.5	96m	7.5		200J	DO41
47	1N5915C	2	3.9	1.5	96m	7.5		200J	DO41
48	1N5915B	5	3.9	1.5	96m	7.5		200J	DO41
49	1N5915A	10	3.9	1.5	96m	7.5		200J	DO41
50	1N5915	20	3.9	1.5	96m	7.5		200J	DO41
51	2EZ3.9D5	5	3.9	2.0	128m	5.0		200J	A1ay
52	BZV47C3V9	5	3.9	2.0	100m	7.0	5.0	175J	A344r
53	LMZ3.9A	5	3.9	2.0	128m	5.0	6.0	150A	DO41
54	ZBC3.9B	5	3.9	2.0	128m	9.0			A1ty
55	2EZ3.9D10	10	3.9	2.0	128m	5.0		200J	A1ay
56	LMZ3.9	10	3.9	2.0	128m	5.0	6.0	150A	DO41
57	ZBC3.9A	10	3.9	2.0	128m	9.0			A1ty
58	2EZ3.9D	20	3.9	2.0	128m	5.0		200J	A1ay
59	ZBC3.9	20	3.9	2.0	128m	9.0			A1ty
60	1N5010A	5	3.9	2.5	160m	5.0	4.6	150	A1gn
61	Z2B3.9	5†	3.9	2.5	100m	4.0	5.0	200J	DO1
62	1N5010	10	3.9	2.5	160m	5.0	4.6	150	A1gn
63	3EZ3.9D1	1.0	3.9	3.0	192m	4.5		150J	A1ay
64	3EZ3.9D2	2.0	3.9	3.0	192m	4.5		150J	A1ay
65	3EZ3.9D3	3.0	3.9	3.0	192m	4.5		150J	A1ay
66	3EZ3.9D4	4.0	3.9	3.0	192m	4.5		150J	A1ay
67	3EZ3.9D5	5	3.9	3.0	192m	4.5		200J	A1ay
68	BZV16C3V9	5	3.9	3.0	123m	9.0	5.0	175J	DO13
69	ZCC3.9B	5	3.9	3.0	195m	2.5			A1ey
70	3EZ3.9D10	10	3.9	3.0	192m	4.5		200J	A1ay
71	ZCC3.9A	10	3.9	3.0	195m	2.5			A1ey
72	3EZ3.9D	20	3.9	3.0	192m	4.5		200J	A1ay
73	ZCC3.9	20	3.9	3.0	195m	2.5			A1ey
74	1N1588A	5	3.9	3.5	150m	4.5	4.0	200S	DO4
75	1N1588	10	3.9	3.5	150m	4.5	4.0	200S	DO4
76▼	SZ3-3.9-5-25								
		5.0	3.9	5.0	25m			175	u5c
77▼	SZ3-3.9-10-25								
		10	3.9	5.0	25m			175	u5c
78▼	SZ3-3.9-20-25								
		20	3.9	5.0	25m			175	u5c
79	1N1954B	1	3.95	400m	5.0m	11	6.0	150	DO7
80	1N1954A	5	3.95	400m	5.0m	11	6.0	150	DO7
81	1N1954	10	3.95	400m	5.0m	11	6.0	150	DO7
82	RD3.9EL		3.95	500m	1.0m	50		175J	A277b
83	RD3.9EN		3.95	500m	5.0m	50		175J	A277b
84	RD3.9MB2	3	4.0	200m	5.0m	130		150	
85	HZ4B3	3	4.0	400m	5.0m	100	2.1mV	175J	DO35
86	MZ304,A,B,C								
		5	4.0	500m	10m	50	2.5	175J	DO35
87	AW03-04	15	4.0	1.0	60m	15	5.0	150J	A277n
88	RD3.9EB2		4.01	500m	20m	50		175J	A277b
89	RD3.9EL2		4.01	500m	1.0m	50		175J	A277b
90	RD3.9EN2		4.01	500m	5.0m	50		175J	A277b
91	RD3.9FB2		4.01	1.0	40m	15		175J	A277r
92	HZ3.9EB2	3.6	4.03	500m	20m	50		175J	DO35
93	1N375	5	4.1		5.0m	17		150A	A1er
94	1N374	10	4.1		5.0m	20		150A	A1er
95	1N467B	1	4.1	200m	5.0m	45 †		150S	C1
96	RD4.3MB1	3	4.1	200m	5.0m	130		150	
97	1N467A	5	4.1	200m	5.0m	45 †		150S	C1
98	1N472A	5	4.1	200m	5.0m	60 †		150S	C1
99	1N704A	4.9	4.1	.25	5.0m	45		200A	A398
100	1N704	9.7	4.1	.25	10m	45		200A	A398
101	1N467	10	4.1	250m	5.0m	45 †		200A	C1
102	HZ4C1	2	4.1	400m	5.0m	100	2.1mV	175J	DO35
103	BZY88C4V7	5	4.1	400m	5.0m	85	3.2	200J	DO7
104	HZ4HC1	2	4.1	500m	5.0m	100	2.1mV	175J	DO35
105	HZ3.9PC		4.1	800m	40m	15		175J	DO41
106	RD3.9EC	5	4.15	500m	20m	50	2.2	175J	DO35
107	RD4.3FB1		4.15	1.0	40m	15		175J	A277r
108	RD3.9FC	6	4.15	1.0	40m	15		175J	A297c
109	RD4.3EB1		4.16	500m	20m	40		175J	A277b
110	RD4.3EL1		4.16	500m	1.0m	40		175J	A277b
111	RD4.3EN1		4.16	500m	5.0m	40		175J	A277b
112	HZ4.3EB1	3.0	4.17	500m	20m	40		175J	DO35
113	HZ4LLC		4.2	250m	500u	370		175J	DO35
114	HZ4C2	2	4.2	400m	5.0m	100	2.1mV	175J	DO35
115	HZ4HC2	2	4.2	500m	5.0m	100	2.1mV	175J	DO35
116	HZ4.3PB		4.2	800m	40m	15		175J	DO41
117	RD4.3FB	5	4.25	1.0	40m	15		175J	A297c
118	RD4.3FB2		4.28	1.0	40m	15		175J	A277r
119	TZPD4.3		4.3		5.0m	90	4.0		DO35
120	TZPY4.3		4.3		100m	7.0	2.0		DO41
121	BZV49C4V3	5	4.3		5.0m	75	-4	150J	M1008
122	CD4731A	5.0	4.3		58m	9.0		200	u52
123	CD5336B	5	4.3		290m	2.0	5.2	200J	u39b
124	MMBZ5229	5	4.3		20m	22			M500
125	TSC6082CHIP								
		5	4.3		20m				u46
126	ND4V3	10	4.3		5.0m	90	4.5		u48
127	BZ4.3	5	4.3	.15	5.0m	90		170A	DO7
128	RD4.3MB		4.3	200m	5.0m	130		150J	M500c
129	RD4.3MB2	3	4.3	200m	5.0m	130		150	
130	BZX84C4V3	5	4.3	200m	5.0m	80	5.0	150J	M500d
131	1N4623	5	4.3	.25	.25m	1.6k		200	DO14
132	1N4687	5	4.3	.25	.05m			200A	DO14
133	CLVA43A	5	4.3	250m	20m	100 †		175	u20j
134	PD6005,A	5†	4.3	.25	10m	50		150	A109
135	PD6046	5	4.3	.25	10m	38		150	A2c
136	PD6201	5	4.3	250m	20m	18		175A	A109
137	1/4M4.3AZ10								
		10†	4.3	250m	10m	45		175J	E204h
138	BZX88C4V3	5	4.3	300m	5.0m	90	4.5	175S	A412
139	C5D5229	10	4.3	320m	20m			150S	M713a
140	ZTE4.3	13	4.3	350m	5.0m	25	30	150J	DO35
141	MA4043	5	4.3	370m	5.0m	100	3.5	200J	DO34
142	1N5521D	1	4.3	400m§	20m	18		175A	DO7
143	1N6082D	1	4.3	400m§	2.0m	18	5.5	175L	DO7
144	KZ43C	1	4.3	400m§	20m	12		175J	DO7
145	LVA43C	1	4.3	400m	20m	18		175A	DO7
146	LVA343C	1	4.3	400m	20m	18		175	DO7
147	Z5A4.3	1†	4.3	400m§	5.0m	75	5.0	200J	DO7
148	1N5521C	2	4.3	400m§	20m	18		175A	DO7
149	1N6082C	2	4.3	400m§	2.0m	18	5.5	175L	DO7
150	BZX79B4V3	2	4.3	400m§	5.0m	90	2.5mV	200J	DO35
151	HZ4C3	2	4.3	400m	5.0m	100	2.1mV	175J	DO35
152	KZ43B	2	4.3	400m§	20m	12		175A	DO7
153	LVA43B	2	4.3	400m	20m	18			DO7
154	LVA343B	2	4.3	400m	20m	18		175	DO7
155	1N749A	5	4.3	400m	20m	27	3.6	175A	A1
156	1N3509	5	4.3	.40	20m	18	3.6	200A	DO7
157	1N5521B	5	4.3	400m§	20m	18		175A	DO7
158	1N6082B	5	4.3	400m§	2.0m	18	5.5	175L	DO7
159	1S2043A	5	4.3	.40	5.0m	90	4.0	150A	A1
160	1S7043,B	5†	4.3	.40	5.0m	100	4.0	150A	A1
161	1S7043A	5	4.3	.40	5.0m	90	4.0	150A	A1
162	BZX79C4V3	5	4.3	400m§	5.0m	90	2.5mV	200J	DO35
163	BZX96C4V3	5	4.3	400m	5.0m	75	4.0	150J	DO7
164	CD749A	5	4.3	400m	20m	22	3.5	200J	u39a
165	CD4623	5	4.3	400m	250u	1.6k	5.0	200J	u39a
166	CD5229B	5	4.3	400m	20m	22	5.5	200J	u39a
167	CH749	5	4.3	400m	20m	18	3.3	200J	u10
168	CH4623	5	4.3	400m	250u	1.6k	5.0	200J	u10
169	CH5229	5	4.3	400m	20m	22	5.5	200J	u10
170	GSZ4.3A	5	4.3	400m	20m	20			A69a
171	K430A	5	4.3	400m§	10m	20	3.2mV	175A	DO7
172	KZ43A	5	4.3	400m§	20m	12		175A	DO7
173	KZ343A	5†	4.3	400m	20m	18		175A	DO7
174	MA1043	5	4.3	400m	5.0m	100	3.5	200J	A24D
175	Z5B4.3	5†	4.3	400m§	5.0m	75	5.0	200J	DO7
176	ZMM749A	5.0	4.3	400m§	20m	22	3.6	175J	F139
177	1N749	10	4.3	400m	20m	27	3.6	175A	A1
178	1N5521A	10	4.3	400m§	20m			175A	DO7
179	1N6082A	10	4.3	400m§	2.0m	18	5.5	175L	DO7
180	1S2043	10	4.3	.40	5.0m	100	4.0	150A	A1
181	GSZ4.3	10	4.3	400m	20m	20			A69a
182	K430	10	4.3	400m§	10m	20	3.2mV	175A	DO7
183	ZMM749	10	4.3	400m§	20m	22	3.6	175J	F139
184	1N5521	20	4.3	400m§	20m			175A	DO7
185	1N6082	20	4.3	400m§	2.0m	18	5.5	175L	DO7
186	05Z4.3		4.3	500m	10m	70	7.5	175J	DO35
187	GZA4.3		4.3	500m		35 †	7.5		A159
188	RD4.3EB2		4.30	500m	20m	40		175J	A277b
189	RD4.3EL		4.30	500m	1.0m	40		175J	A277b
190	RD4.3EL2		4.30	500m	1.0m	40		175J	A277b
191	RD4.3EN		4.30	500m	5.0m	40		175J	A277b
192	RD4.3EN2		4.30	500m	5.0m	40		175J	A277b
193	1N5991D	1	4.3	500m	5.0m	88		200J	DO35
194	Z0A4.3	1†	4.3	500m	5.0m	35 †	6.0	200J	DO29
195	1N5991C	2	4.3	500m	5.0m	88		200J	DO35
196	HZ4HC3	2	4.3	500m	5.0m	100	2.1mV	175J	DO35
197	HZ4.3EB2	3.0	4.3	500m	20m	40		175J	DO35
198	1N5229B	5	4.3	500m	20m	18	5.5	200A	A398a
199	1N5845B	5	4.3	500m	20m	25		150C	M859
200	1N5991B	5	4.3	500m	5.0m	88		200J	DO35
201	BZX46C4V3	5	4.3	500m	20m	22	4.0	175A	DO35
202	BZX55C4V3	5	4.3	500m	5.0m	70	4.5	175A	DO35
203	BZX83C4V3	5	4.3	500m	5.0m	80	-5	175A	DO35
204	CD43	5	4.3	500m	20m	12		200J	DO7
205	CTZ4.3A	5	4.3	500m	20m	180	400	200	DO35
206	MLL5229B	5.0	4.3	500m§	20m	22	5.5	200J	F140
207	PS8904	5	4.3	.50	20m	18	4.0	150	A60p
208	RD4.3EB	5	4.3	500m	20m	40	1.4	175J	DO35
209	Z0B4.3	5†	4.3	500m	5.0m	35 †	6.0	200J	DO29
210	ZMM5229B	5.0	4.3	500m§	20m	22	5.5	200J	F139

SYMBOLS AND CODES EXPLAINED IN INTERPRETER

IN ORDER OF: (1) REF. VOLTAGE (2) PD MAX (3) TOLERANCE & (4) TYPE NUMBER

LINE No.	4 TYPE No.	3 TOL ± (%)	1 NOM. REF. VOLT. (V)	2 PD @ 25°C MAX (W)	TEST CUR. Izt (A)	DYN. IMP. MAX (Ω)	TEMP. COEFF Tc MAX	TEMP MAX (°C)	DWG. NO.
1	ZPD4V3	5†	4.3	500m	5.0m	500	1.5mV	175J	DO35
2	ZPD4.3	5	4.3	.50	5.0m	90	3.5	175J	DO35
3	ZMM4.3	6†	4.3	500m	5.0m	95	3.5	175J	F135
4	BZV55C4V3	6.9	4.3	500m	5.0m	90	2.5	200J	F139
5	BZX97C4V3	7	4.3	500m	5.0m	75	4.5	175J	DO35
6	BZV60C4V3	7.5	4.3	500m	5.0m	90	2.5	200J	DO34
7	1N5229A	10	4.3	500m	20m	18	5.5	200A	A398a
8	1N5845A	10	4.3	500m	20m	25		150C	M859
9	1N5991A	10	4.3	500m	5.0m	90		200J	DO35
10	CTZ4.3	10	4.3	500m	20m	180	400	200	DO35
11	MLL5229A	10	4.3	500m§	20m	22	5.5	200J	F140
12▼	SZ.5-4.3-10-25								
		10	4.3	500m	25m			175	u5a
13	ZMM5229A	10	4.3	500m§	20m	22	5.5	200J	F139
14	1N5229	20†	4.3	.50	20m			200A	A398a
15	1N5991	20	4.3	500m	5.0m	90		200J	DO35
16	MLL5229	20	4.3	500m§	20m	22		200J	F140
17▼	SZ.5-4.3-20-25								
		20	4.3	500m	25m			175	u5a
18	ZMM5229	20	4.3	500m§	20m	22	5.5	200J	F139
19	LNA343B	2	4.3	600m	20m	12		175A	DO7
20	GLA43,A,B	5†	4.3	600m	20m	12	2.5	175	DO7
21	LNA343A	5	4.3	600m	20m	12		175A	DO7
22	LVA43A	5	4.3	600m	20m	12			DO14
23	LVA343A	5	4.3	600m	20m	12		175A	DO14
24	LNA343	10	4.3	600m	20m	12		175A	DO7
25	MLNA343B	2	4.3	750m	20m	12		175A	A249e
26	BZV41C4V3	5	4.3	750m	5.0m	90	4.5	175S	A412
27	MGLA43,A,B	5†	4.3	750m	20m	12	2.5	175A	A249e
28	MLNA343A	5	4.3	750m	20m	12		175A	A249e
29	MLV749A	5	4.3	750m	20m	18		175A	A2j
30	MLNA343	10	4.3	750m	20m	12		175A	A249e
31	AP4.3A,B		4.3	1.0 †	20m	40			DO35
32	TSC4731CHIP								
			4.3	1.0	58m	9.0			u46
33	LVA1043C	1	4.3	1.0	20m	18		175	A266c
34	Z4A4.3	1†	4.3	1.0	100m	4.0	4.0	200J	DO29
35	LVA1043B	2	4.3	1.0	20m	18		175	A266c
36	SZ4.3	2†	4.3	1.0	20m	17 †	3.7	150A	A3q
37	1N3824A	5	4.3	1.0	58m	9.0	4.0	175A	A31a
38	1N4652	5	4.3	1.0	58m	400	5.0	200A	DO15
39	1N4731A	5	4.3	1.0	58m	9.0		200A	DO41
40	APD4.3A,B	5†	4.3	1.0 †	58m	15			A1rx
41	BZV85C4V3	5	4.3	1.0	50	13	1.4mV	200J	A1jr
42	BZX85C4V3	5	4.3	1.0 §	50m	12	-3	150A	DO41
43	CD4731	5	4.3	1.0	58m	9.0	3.5	200J	u39a
44	CH4731	5	4.3	1.0	58m	9.0	3.3	200J	u10
45	LVA1043A	5	4.3	1.0	20m	18		175	A266c
46	PL4V3Z	5	4.3	1.0	100m	7.0	2.0	150J	
47▼	SZ1-4.3-5-25								
		5.0	4.3	1.0	25m			175	u5b
48	Z4B4.3	5†	4.3	1.0	100m	4.0	4.0	200J	DO29
49	Z4.3	5†	4.3	1.0	20m	9.5 †	3.0	150A	DO41
50	ZB4.3B	5	4.3	1.0	58m	400			A1ty
51	ZM4731A	5.0	4.3	1.0 §	58m	9.0		200J	F139
52	1N3824	10	4.3	1.0	58m	9.0	4.0	175A	A31a
53	1N4731	10	4.3	1.0	58m	9.0		200A	DO41
54▼	SZ1-4.3-10-25								
		10	4.3	1.0	25m			175	u5b
55	ZB4.3A	10	4.3	1.0	58m	400			A1ty
56	ZM4731	10	4.3	1.0 §	58m	9.0		200J	F139
57▼	SZ1-4.3-20-25								
		20	4.3	1.0	25m			175	u5b
58	ZB4.3	20	4.3	1.0	58m	400			A1ty
59	BZY97C4V3	5	4.3	1.3	100m	7.0	7.0		A1rx
60	ZD4.3	5	4.3	1.3	100	7.0	2.0	150J	DO13
61	ZY4.3	5	4.3	1.3	100m	7.0	7.0	150J	A1bg
62	BZD10C4V3	7	4.3	1.3	100m	7.0	7.0		DO13
63	BZW22C4V3	7	4.3	1.3	100m	7.0	7.0		DO41
64	ZMY4.3	7	4.3	1.3	100m	7.0	5	200J	F149
65	ZPY4.3	13	4.3	1.3	100m	7.0	3.0	200J	DO41
66	1N5916D	1	4.3	1.5	87m	6.0		200J	DO41
67	1N5916C	2	4.3	1.5	87m	6.0		200J	DO41
68	1N5916B	5	4.3	1.5	87m	6.0		200J	DO41
69	1N5916A	10	4.3	1.5	87m	6.0		200J	DO41
70	1N5916	20	4.3	1.5	87m	6.0		200J	DO41
71	2EZ4.3D5	5	4.3	2.0	116m	4.5		200J	A1ay
72	BZV47C4V3	5	4.3	2.0	100m	7.0	4.0	175J	A344r
73	LMZ4.3A	5	4.3	2.0	116m	5.0	5.0	150A	DO41
74	ZBC4.3B	5	4.3	2.0	116m	9.0			A1ty
75	2EZ4.3D10	10	4.3	2.0	116m	4.5		200J	A1ay
76	LMZ4.3	10	4.3	2.0	116m	5.0	5.0	150A	DO41
77	ZBC4.3A	10	4.3	2.0	116m	9.0			A1ty
78	2EZ4.3D	20	4.3	2.0	116m	4.5		200J	A1ay
79	ZBC4.3	20	4.3	2.0	116m	9.0			A1ty
80	1N5011A	5	4.3	2.5	145m	4.0	3.3	150	A1gn
81	Z2B4.3	5†	4.3	2.5	100m	4.0	4.0	200J	DO1
82	1N5011	10	4.3	2.5	145m	4.0	3.3	150	A1gn
83	3EZ4.3D1	1.0	4.3	3.0	174m	4.5		150J	A1ay
84	3EZ4.3D2	2.0	4.3	3.0	174m	4.5		150J	A1ay
85	3EZ4.3D3	3.0	4.3	3.0	174m	4.5		150J	A1ay
86	3EZ4.3D4	4.0	4.3	3.0	174m	4.5		150J	A1ay
87	3EZ4.3D5	5	4.3	3.0	174m	4.5		200J	A1ay
88	BZV16C4V3	5	4.3	3.0	116m	9.0	4.0	175J	DO13
89	ZCC4.3B	5	4.3	3.0	175m	2.5			A1ey
90	3EZ4.3D10	10	4.3	3.0	174m	4.5		200J	A1ay
91	ZCC4.3A	10	4.3	3.0	175m	2.5			A1ey
92	3EZ4.3D	20	4.3	3.0	174m	4.5		200J	A1ay
93	ZCC4.3	20	4.3	3.0	175m	2.5			A1ey
94▼	SZ3-4.3-5-25								
		5.0	4.3	5.0	25m			175	u5c
95▼	SZ3-4.3-10-25								
		10	4.3	5.0	25m			175	u5c
96▼	SZ3-4.3-20-25								
		20	4.3	5.0	25m			175	u5c
97	RD4.3MB3	3	4.4	200m	5.0m	130		150	
98	HZ5A1	2	4.4	400m	5.0m	100	2.1mV	175J	DO35
99	HZ5HA1	2	4.4	500m	5.0m	100	2.1mV	175J	DO35
100	HZ4.3EB3	3.3	4.4	500m	20m	40		175J	DO35
101	RD4.3FB3		4.41	1.0	40m	15		175J	A277r
102	RD4.3EB3		4.43	500m	20m	40		175J	A277b
103	RD4.3EL3		4.43	500m	1.0m	40		175J	A277b
104	RD4.3EN3		4.43	500m	5.0m	40		175J	A277b
105	1N2041A	5	4.5		1.0	1.0		150A	S19a
106	RD4.7MB1	3	4.5	200m	5.0m	130		150	
107	HZ5LLA		4.5	250m	500u	380		175J	DO35
108	RD5AL		4.5	250m	10m	40		175J	A277b
109	1N5676A	10	4.5	250m§	20m	25		125A	C29n
110	HZ5A2	2	4.5	400m	5.0m	100	2.1mV	175J	DO35
111	HZ5HA2	2	4.5	500m	5.0m	100	2.1mV	175J	DO35
112	PS6467	13	4.5	.50	10m	45		200J	A1gd
113	1N2032A	5	4.5	.75	10m	55	2.0	150J	DO12
114	HZ4.3PC		4.5	800m	40m	15		175J	DO41
115	RD5BL		4.5	1.0	40m	15		150J	A427
116	1S220	10	4.5	1.0	50m	17	2.2	150J	A56a
117	RD5CL		4.5	3.0	120m	10		150J	S547
118	RD4.7JSB1(A)								
		2.5	4.51	400m	5.0m	100	1.3	175J	DO34
119	RD4.7FB1		4.53	1.0	40m	10		175J	A277r
120	STB7*	10	4.55		10m			175A	A1bs
121	RD4.3EC	5	4.55	500m	20m	40	1.0	175J	DO35
122	RD4.3FC	5	4.55	1.0	40m	15		175J	A297c
123	HZ4.7EB1	2.6	4.56	500m	20m	25		175J	DO35
124	RD4.7EB1		4.58	500m	20m	25		175J	A277b
125	RD4.7EL1		4.58	500m	1.0m	25		175J	A277b
126	RD4.7EN1		4.58	500m	5.0m	25		175J	A277b
127	RD4.7MB2	3	4.6	200m	5.0m	130		150	
128	HZ5A3	2	4.6	400m	5.0m	100	2.1mV	175J	DO35
129	HZ5HA3	2	4.6	500m	5.0m	100	2.1mV	175J	DO35
130	RD4.7JSB2(A)								
		2.5	4.65	400m	5.0m	100	1.3	175J	DO34
131	BZY88C5V1	5	4.65	400m	5.0m	75	2.3	200J	DO7
132	RD4.7FB2		4.65	1.0	40m	10		175J	A277r
133	RD4.7FB	5	4.65	1.0	40m	10		175J	A297c
134	RD4.7EB2		4.67	500m	20m	25		175J	A277b
135	RD4.7EL2		4.67	500m	1.0m	25		175J	A277b
136	RD4.7EN2		4.67	500m	5.0m	25		175J	A277b
137	RD4.7EL		4.68	500m	1.0m	25		175J	A277b
138	RD4.7EN		4.68	500m	5.0m	25		175J	A277b
139	HZ4.7EB2	2.8	4.68	500m	20m	25		175J	DO35

$V_Z \geq 4.7$ V

LINE No.	4 TYPE No.	3 TOL ± (%)	1 NOM. REF. VOLT. (V)	2 PD @ 25°C MAX (W)	TEST CUR. Izt (A)	DYN. IMP. MAX (Ω)	TEMP. COEFF Tc MAX	TEMP MAX (°C)	DWG. NO.
143	TZPD4.7		4.7		5.0m	78	2.0		DO35
144	TZPY4.7		4.7		100m	7.0	2.0		DO41
145	BZY49C4V7	5	4.7		5.0m	60	-3	150J	M1008
146	CD4732A	5.0	4.7		53m	8.0		200	u52
147	CD5337B	5	4.7		260m	2.0	2.9	200J	u39b
148	MMBZ5230	5	4.7		20m	19			M500
149	NC4V7	5	4.7		5.0m	80	2.5		u48
150▼	TMPZ5230	5.0	4.7		20m	19			TO236Ø
151	TSC6083CHIP								
		5	4.7		10m				u46
152	1N1982B	1	4.7	150m	5.0m	10	5.0	150	C1
153	1N1982A	5	4.7	150m	5.0m	10	5.0	150	C1
154	BZ4.7	5	4.7	.15	5.0m	80		170A	DO7
155	MA3047	5.0	4.7	150m	5.0m	80	3.5	125J	M713b
156	1N1982	10	4.7	150m	5.0m	10	5.0	150	C1
157	1N1928B	1	4.7	200m	5.0m	10	5.0	150A	A82e
158	1N1928A	5	4.7	200m	5.0m	10	5.0	150A	A82e
159	BZX84C4V7	5	4.7	200m	5.0m	80	3.0	150J	M500d
160	RD4.7MB	5.0	4.7	200m	5.0m	130		150J	M500c
161	1N1928	10	4.7	200m	5.0m	10	5.0	150A	A82e
162	1N4624	5	4.7	.25	250u	1.5k		200	DO14
163	1N4688	5	4.7	.25	50u			200A	DO14
164	BZY83C4V7	5	4.7	.25	5.0m	90	1.0	150J	C1g
165	CLVA47A	5	4.7	250m	10m	5.0 †		175	u20j
166	PD6006,A	5†	4.7	.25	10m	45		150	A109
167	PD6047	5	4.7	.25	10m	32		150	A2c
168	PD6202	5	4.7	250m	10m	15		175A	A109
169	1/4M4.7AZ10								
		10†	4.7	250m	10m	35		175J	E204h
170	BZY83D4V7	10	4.7	.25	5.0m	90		150J	C1g
171	02BZ4.7	15	4.7	250m	10m	35	5.5	175J	DO35
172	C5D5230	10	4.7	320m	20m			150S	M713a
173	BZX88C4V7	5	4.7	350m	5.0m	80	2.5	175J	A412
174	ZTE4.7	12	4.7	350m	5.0m	25	30	150J	DO35
175	MA4047	5	4.7	370m	5.0m	80	3.5	200J	DO34
176	MTZ4.7		4.7	400m	20m	35		175J	DO34
177	TZ4.7		4.7	400m	20m	35		175J	DO35
178	1N1955B	1	4.7	400m	5.0m	10	5.0	150	DO7
179	1N5522D	1	4.7	400m§	10m	22		175A	DO7
180	1N5728D	1	4.7	400m§	10m	70	2.1	200A	DO35
181	1N6083D	1	4.7	400m§	1.0m	10	43	175L	DO7
182	KZ47C	1	4.7	400m§	10m	15		175J	DO7
183	LVA47C	1	4.7	400m	10m	15		175A	DO7
184	Z5A4.7	1†	4.7	400m§	5.0m	70	5.0	200J	DO7
185	1N5522C	2	4.7	400m§	10m	22		175A	DO7
186	1N5728C	2	4.7	400m§	10m	70	2.1	200A	DO35
187	1N6083C	2	4.7	400m§	1.0m	10	43	175L	DO7
188	BZX79B4V7	2	4.7	400m§	5.0m	80	1.4mV	200J	DO35
189	HZ5B1	2	4.7	400m	5.0m	100	2.1mV	175J	DO35
190	KZ47B	2	4.7	400m§	10m	15		175A	DO7
191	LVA47B	2	4.7	400m	10m	15		175A	DO7
192	1N674	5	4.7	.40	20m	16	3.0	200S	A31b
193	1N750A	5	4.7	400m	20m	19	1.8	175A	A1
194	1N1955A	5	4.7	400m	5.0m	10	5.0	150	DO7
195	1N3510	5	4.7	.40	20m	16	1.8	200A	DO7
196	1N5522B	5	4.7	400m§	10m	22		175A	DO7
197	1N5728	5	4.7	400m	10m	70 †	1.0 V	200	DO35
198	1N5728B	5	4.7	400m§	10m	70	2.1	200A	DO35
199	1N6083B	5	4.7	400m§	1.0m	10	43	175L	DO7
200	1S2047A	5	4.7	.40	5.0m	85	2.5	150A	A1
201	1S7047A	5	4.7	.40	5.0m	85	2.5	150A	A1
202	BZX79C4V7	5	4.7	400m§	5.0m	80	1.4mV	200J	DO35
203	BZX96C4V7	5	4.7	400m	5.0m	70	2.0	150J	DO7
204	CD750A	5	4.7	400m	20m	19	1.5	200J	u39a
205	CD4624	5	4.7	400m	250u	1.5k	2.0	200J	u39a
206	CD5230B	5	4.7	400m	20m	19	3.0	200J	u39a
207	CH750	5	4.7	400m	20m	16	1.5	200J	u10

SYMBOLS AND CODES EXPLAINED IN INTERPRETER

2. VOLTAGE REFERENCE DIODES - $V_Z \geq 4.7$ V (Cont'd)

IN ORDER OF: (1) REF. VOLTAGE (2) PD MAX (3) TOLERANCE & (4) TYPE NUMBER

LINE No.	4 TYPE No.	3 TOL ± (%)	1 NOM. REF. VOLT. (V)	2 PD @ 25°C MAX (W)	TEST CUR. Izt (A)	DYN. IMP. MAX (Ω)	TEMP. COEFF Tc MAX	TEMP MAX (°C)	DWG. NO.
1	CH4624	5	4.7	400m	250u	1.5k	3.0	200J	u10
2	CH5230	5	4.7	400m	20m	19	3.0	200J	u10
3	GSZ4.7A	5	4.7	400m	20m	18			A69a
4	K470A	5	4.7	400m§	10m	20	3.2mV	175A	DO7
5	KZ47A	5	4.7	400m§	10m	15		175A	DO7
6	KZ347A	5†	4.7	400m	10m	10		175A	DO7
7	LVA47A	5	4.7	400m	10m	15		175A	DO7
8	MA1047	5	4.7	400m	5.0m	80	3.5	200J	A24d
9	RD4.7JB	5	4.7	400m	5.0m	100		175J	DO35
10	T-LVA47A	5†	4.7	400m	10m	15		175J	DO35
11	T-LVA347A	5†	4.7	400m	10m	10		175J	DO35
12	Z5B4.7	5†	4.7	400m§	5.0m	70	5.0	200J	DO7
13	ZMM750A	5.0	4.7	400m§	20m	19	1.8	175J	F139
14	1N750	10	4.7	400m	20m	19	1.8	175A	A1
15	1N1955	10	4.7	400m	5.0m	10	5.0	150	DO7
16	1N5522A	10	4.7	400m§	10m			175A	DO7
17	1N6083A	10	4.7	400m§	1.0m	10	43	175L	DO7
18	1S2047	10	4.7	.40	5.0m	90	2.5	150A	A1
19	1S7047,B	10†	4.7	.40	5.0m	90	2.5	150A	A1
20	GSZ4.7	10	4.7	400m	20m	18			A69a
21	K470	10	4.7	400m§	10m	20	3.2mV	175A	DO7
22	ZMM750	10	4.7	400m§	20m	19	1.8	175J	F139
23	1N5522	20	4.7	400m§	10m			175A	DO7
24	1N6083	20	4.7	400m§	1.0m	10	43	175L	DO7
25	05Z4.7		4.7	500m	10m	60	7.0	175J	DO35
26	GZA4.7		4.7	500m		32 †	7.0		A159
27	1N5992D	1	4.7	500m	5.0m	70		200J	DO35
28	Z0A4.7	1†	4.7	500m	5.0m	30 †	6.0	200J	DO29
29	1N5992C	2	4.7	500m	5.0m	70		200J	DO35
30	HZ5HB1	2	4.7	500m	5.0m	100	2.1mV	175J	DO35
31	1N5230B	5	4.7	500m	20m	16	3.0	200A	A398a
32	1N5846B	5	4.7	500m	20m	19		150C	M859
33	1N5992B	5	4.7	500m	5.0m	70		200J	DO35
34	BZX46C4V7	5	4.7	500m	20m	19	3.0	175A	DO35
35	BZX55C4V7	5	4.7	500m	5.0m	60	2.5	175A	DO35
36	BZX83C4V7	5	4.7	500m	5.0m	80	-3	175A	DO35
37	CD47	5	4.7	500m	10m	10		200J	DO7
38	CTZ4.7A	5	4.7	500m	20m	160	200	200	DO35
39	MA5047	5	4.7	500m	5.0m	80	3.5	125J	M990
40	MLL5230B	5.0	4.7	500m§	20m	19	3.0	200J	F140
41	PS8905	5	4.7	.50	20m	16	.01	150	A60p
42	RD4.7EB	5	4.7	500m	20m	35	2.0	175J	DO35
43	TS04700	5	4.7	500m	1.0m			200J	DO35
44	Z0B4.7	5†	4.7	500m	5.0m	30 †	6.0	200J	DO29
45	ZMM5230B	5.0	4.7	500m§	20m	19	3.0	200J	F139
46	ZPD4V7	5†	4.7	500m	5.0m	500	.70mV	175J	DO35
47	ZPD4.7	5	4.7	.50	5.0m	78	1.5	175J	DO35
48	BZX97C4V7	6	4.7	500m	5.0m	60	2.5	175J	DO35
49	ZMM4.7	6†	4.7	500m	5.0m	78	1.5	175J	F135
50	BZV55C4V7	6.3	4.7	500m	5.0m	80	1.4	200J	F139
51	BZV60C4V7	6.8	4.7	500m	5.0m	80	1.4	200J	DO34
52	EQA02-05AB	8	4.7	500m	20m	30	.01	175J	A1ac
53	1N3398	10	4.7	500m	30m	30	8.0	200S	P5
54	1N5230A	10	4.7	500m	20m	16	3.0	200A	A398a
55	1N5846A	10	4.7	500m	20m	19		150C	M859
56	1N5992A	10	4.7	500m	5.0m	90		200J	DO35
57	CTZ4.7	10	4.7	500m	20m	160	200	200	DO35
58	MLL5230A	10	4.7	500m§	20m	19	3.0	200J	F140
59▼	SZ.5-4.7-10-25								
		10	4.7	500m	25m			175	u5a
60	ZMM5230A	10	4.7	500m§	20m	19	3.0	200J	F139
61	1N5230	20†	4.7	.50	20m			200A	A398a
62	1N5992	20	4.7	500m	5.0m	90		200J	DO35
63	MLL5230	20	4.7	500m§	20m	19		200J	F140
64▼	SZ.5-4.7-20-25								
		20	4.7	500m	25m			175	u5a
65	ZMM5230	20	4.7	500m§	20m	19	3.0	200J	F139
66	LVA347C	1	4.7	600m	10m	10		175A	DO14
67	LNA347B	2	4.7	600m	10m	10		175A	DO7
68	LVA347B	2	4.7	600m	10m	10		175A	DO14
69	GLA47,A,B	5†	4.7	600m	10m	10	1.0	175	DO7
70	LNA347A	5	4.7	600m	10m	10		175A	DO7
71	LVA347A	5	4.7	600m	10m	10		175A	DO14
72	LNA347	10	4.7	600m	10m	10		175A	DO7
73	MLNA347B	2	4.7	750m	10m	10		175A	A249e
74	1N1508A	5	4.7	.75	30m	13	0.0	200S	DO12
75	BZV41C4V7	5	4.7	750m	5.0m	80	2.5	175S	A412
76	MGLA47,A,B	5†	4.7	750m	10m	10	1.0	175A	A249e
77	MLNA347A	5	4.7	750m	10m	10		175A	A249e
78	MLV750A	5	4.7	750m	20m	16		175A	A2j
79	1N1508	10	4.7	.75	30m	13	0.0	200S	DO12
80	MLNA347	10	4.7	750m	10m	10		175A	A249e
81	HZ4.7PB		4.7	800m	40m	10		175J	DO41
82	AP4.7A,B		4.7	1.0 †	20m	35			DO35
83	TSC4732CHIP								
			4.7	1.0	53m	8.0			u46
84	LVA1047C	1	4.7	1.0	10m	15		175	A266c
85	Z4A4.7	1†	4.7	1.0	100m	4.0	3.0	200J	DO29
86	LVA1047B	2	4.7	1.0	10m	15		175	A266c
87	SZ4.7	2†	4.7	1.0	20m	12 †	2.9	150A	A3g
88	1N1484	5	4.7	1.0	50m	5.0 †	4.0	200A	A154
89	1N1519A	5	4.7	1.0	40m	13	0.0	200S	DO3
90	1N3825A	5	4.7	1.0	53m	8.0	2.0	175A	A31a
91	1N4653	5	4.7	1.0	53m	500	2.5	200A	DO15
92	1N4732A	5	4.7	1.0	53m	8.0		200A	DO41
93	APD4.7A,B	5†	4.7	1.0 †	53m	10			A1rx
94	BZV85C4V7	5	4.7	1.0	45	13	0.7mV	200J	A1jr
95	BZX85C4V7	5	4.7	1.0 §	45m	13	-1	150A	DO41
96	CD4732	5	4.7	1.0	53m	8.0	1.5	200J	u39a
97	CH4732	5	4.7	1.0	53m	8.0	1.5	200J	u10
98	LVA1047A	5	4.7	1.0	10m	15		175	A266c
99	PL4V7Z	5	4.7	1.0	100m	7.0	1.0	150J	
100	RD4.7P(A)	5.0	4.7	1.0	5.0m	80	1.3	150J	M1008
101▼	SZ1-4.7-5-25								
		5.0	4.7	1.0	25m			175	u5b
102	Z4B4.7	5†	4.7	1.0	100m	4.0	3.0	200J	DO29
103	Z4.7	5†	4.7	1.0	20m	4.7 †	2.0	150A	DO41
104	ZB4.7B	5	4.7	1.0	53m	500			A1ty
105	ZM4732A	5.0	4.7	1.0 §	53m	8.0		200J	F139
106	1N1519	10	4.7	1.0	40m	13	0.0	200S	DO3
107	1N3825	10	4.7	1.0	53m	8.0	2.0	175A	A31a
108	1N4732	10	4.7	1.0	53m	8.0		200A	DO41
109	KS447A	10	4.7	1.0	30m	18 †	3.0	100C	A378
110▼	SZ1-4.7-10-25								
		10	4.7	1.0	25m			175	u5b
111	ZB4.7A	10	4.7	1.0	53m	500			A1ty
112	ZM4732	10	4.7	1.0 §	53m	8.0		200J	F139
113▼	SZ1-4.7-20-25								
		20	4.7	1.0	25m			175	u5b
114	ZB4.7	20	4.7	1.0	53m	500			A1ty
115	BZY97C4V7	5	4.7	1.3	100m	7.0	7.0		A1rx
116	ZD4.7	5	4.7	1.3	100	7.0	1.0	150J	DO13
117	ZY4.7	5	4.7	1.3	100m	7.0	7.0	150J	A1bg
118	BZD10C4V7	6	4.7	1.3	100m	7.0	7.0		DO13
119	BZW22C4V7	6	4.7	1.3	100m	7.0	7.0		DO41
120	ZMY4.7	6	4.7	1.3	100m	7.0	5	200J	F149
121	ZPY4.7	12	4.7	1.3	100m	7.0	4.0	200J	DO41
122	1N5917D	1	4.7	1.5	79m	5.0		200J	DO41
123	1N5917C	2	4.7	1.5	79m	5.0		200J	DO41
124	1N5917B	5	4.7	1.5	79m	5.0		200J	DO41
125	BZY96C4V7	5	4.7	1.5	100m	10	1.2	175J	DO1
126	1N5917A	10	4.7	1.5	79m	5.0		200J	DO41
127	1N5917	20	4.7	1.5	79m	5.0		200J	DO41
128	2EZ4.7D5	5	4.7	2.0	106m	4.5		200J	A1ay
129	BZV47C4V7	5	4.7	2.0	100m	7.0	2.0	175J	A344r
130	LMZ4.7A	5	4.7	2.0	106m	4.5	2.5	150A	DO41
131	ZBC4.7B	5	4.7	2.0	106m	8.0			A1ty
132	2EZ4.7D10	10	4.7	2.0	106m	4.5		200J	A1ay
133	LMZ4.7	10	4.7	2.0	106m	4.5	2.5	150A	DO41
134	ZBC4.7A	10	4.7	2.0	106m	8.0			A1ty
135	2EZ4.7D	20	4.7	2.0	106m	4.5		200J	A1ay
136	ZBC4.7	20	4.7	2.0	106m	8.0			A1ty
137	1N5012A	5	4.7	2.5	133m	3.5	1.5	150	A1gn
138	Z2B4.7	5†	4.7	2.5	100m	4.0	1.0	200J	DO1
139	1N5012	10	4.7	2.5	133m	3.5	1.5	150	A1gn
140	3EZ4.7D1	1.0	4.7	3.0	160m	4.0		150J	A1ay
141	3EZ4.7D2	2.0	4.7	3.0	160m	4.0		150J	A1ay
142	3EZ4.7D3	3.0	4.7	3.0	160m	4.0		150J	A1ay
143	3EZ4.7D4	4.0	4.7	3.0	160m	4.0		150J	A1ay
144	3EZ4.7D5	5	4.7	3.0	160m	4.0		200J	A1ay
145	BZV16C4V7	5	4.7	3.0	106m	8.0	2.0	175J	DO13
146	ZCC4.7B	5	4.7	3.0	160m	2.5			A1ey
147	3EZ4.7D10	10	4.7	3.0	160m	4.0		200J	A1ay
148	ZCC4.7A	10	4.7	3.0	160m	2.5			A1ey
149	3EZ4.7D	20	4.7	3.0	160m	4.0		200J	A1ay
150	ZCC4.7	20	4.7	3.0	160m	2.5			A1ey
151	1N1589A	5	4.7	3.5	125m	4.0	0.0	200S	DO4
152	1N1589	10	4.7	3.5	125m	4.0	0.0	200S	DO4
153▼	SZ3-4.7-5-25								
		5.0	4.7	5.0	25m			175	u5c
154▼	SZ3-4.7-10-25								
		10	4.7	5.0	25m			175	u5c
155▼	SZ3-4.7-20-25								
		20	4.7	5.0	25m			175	u5c
156	RD4.7JSB3(A)								
		2.5	4.78	400m	5.0m	100	1.3	175J	DO34
157	RD4.7FB3		4.78	1.0	40m	10		175J	A277r
158	RD4.7JSB(A)								
		5.0	4.79	400m	5.0m	100	1.3	175J	DO34
159	RD4.7MB3	3	4.8	200m	5.0m	130		150	
160	HZ5LLB		4.8	250m	500u	380		175J	DO35
161	RD5AK		4.8	250m	10m	40		175J	A277b
162	RD5AM		4.8	250m	10m	40		175J	A277b
163	1N705A	5.5	4.8	.25	5.0m	35		200A	A398
164	1N705	11.	4.8	.25	10m	35		200A	A398
165	HZ5B2	2	4.8	400m	5.0m	100	2.1mV	175J	DO35
166	RD4.7EB3		4.80	500m	20m	25		175J	A277b
167	RD4.7EL3		4.80	500m	1.0m	25		175J	A277b
168	RD4.7EN3		4.80	500m	5.0m	25		175J	A277b
169	HZ5HB2	2	4.8	500m	5.0m	100	2.1mV	175J	DO35
170	EQA01-05R	10	4.8	500m	15m	25	.01	125J	A387
171	RD5BK		4.8	1.0	40m	15		150J	A427
172	RD5BM		4.8	1.0	40m	15		150J	A427
173	RD5CK		4.8	3.0	120m	10		150J	S547
174	RD5CM		4.8	3.0	120m	10		150J	S547
175	HZ4.7EB3	2.8	4.81	500m	20m	25		175J	DO35
176	1N468B	1	4.85	200m	5.0m	35 †		150S	C1
177	1N468A	5	4.85	200m	5.0m	35 †		150S	C1
178	1N473A	5	4.85	200m	5.0m	50 †		150S	C1
179	1N761	10	4.85	250m	10m	40		150A	A398
180	PS6468	13	4.85	.50	10m	35		200J	A1gd
181	1N2032	10	4.85	750m	10m	55		150A	DO12
182	RD5C	10	4.85	3.0	120m	10	0.0	150S	S42
183	RD5.1MB1	3	4.9	200m	5.0m	130		150	
184	HZ5LLC		4.9	250m	500u	380		175J	DO35
185	1N761A	5†	4.9	250m	10m	40	0.0	150	DO7
186	1N468	10	4.9	250m	5.0m	35 †		200A	C1
187	HZ5B3	2	4.9	400m	5.0m	100	2.1mV	175J	DO35
188	HZ5HB3	2	4.9	500m	5.0m	100	2.1mV	175J	DO35
189	RD4.7EC	5	4.9	500m	20m	35	0.0	175J	DO35
190	HZ4.7PC		4.9	800m	40m	10		175J	DO41
191	RD5.1JSB1(A)								
		2.5	4.92	400m	5.0m	80	2.0	175J	DO34
192	RD5.1FB1		4.92	1.0	40m	8.0		175J	A277r
193	RD5.1EB1		4.94	500m	20m	20		175J	A277b
194	RD5.1EL1		4.94	500m	1.0m	20		175J	A277b
195	RD5.1EN1		4.94	500m	5.0m	20		175J	A277b
196	HZ5.1EB1	2.5	4.94	500m	20m	20		175J	DO35
197	1N376	5	4.95		5.0m	15		150A	A1er
198	RD4.7FC	5	4.95	1.0	40m	10		175J	A297c
199	1N2041B	5	5.0		1.0	1.0		150A	S19a
200	SZ5	10	5.0	.25	20m	30	.28	150J	C1f
201	1N4095	10	5.0	.33	5.0m		3.4	175	DO7
202	HZ5C1	2	5.0	400m	5.0m	100	2.1mV	175J	DO35
203	KZ450C	2	5.0	400m§	250u	700	1.5	175A	DO7
204	LVA150C	2	5.0	400m	250u	900	1.5	150A	DO14
205	LVA450C	2	5.0	400m	250u	700	1.5	150A	DO7
206	KZ450B	3	5.0	400m§	250u	700	1.5	175A	DO7
207	LVA150B	3	5.0	400m	250u	900	1.5	150A	DO14
208	KZ450A	4	5.0	400m§	250u	700	1.5	175A	DO7

SYMBOLS AND CODES EXPLAINED IN INTERPRETER

2. VOLTAGE REFERENCE DIODES - $V_Z \geq 4.7$ V (Cont'd)

IN ORDER OF: (1) REF. VOLTAGE (2) PD MAX (3) TOLERANCE & (4) TYPE NUMBER

LINE No.	4 TYPE No.	3 TOL ± (%)	1 NOM. REF. VOLT. (V)	2 PD @ 25°C MAX (W)	TEST CUR. Izt (A)	DYN. IMP. MAX (Ω)	TEMP. COEFF Tc MAX	TEMP MAX (°C)	DWG. NO.
1	LVA150A	4	5.0	400m	250u	900	1.5	150A	DO14
2	T-LVA450A	4†	5.0	400m	250u	700	750uV	175J	DO35
3	KZ450	5†	5.0	400m		700	0.7	175A	DO7
4	LVA150	10	5.0	400m	250u	900	1.5	150A	DO14
5	LVA450	10	5.0	400m	250u	700	1.5	150A	DO14
6	HZ5HC1	2	5.0	500m	5.0m	100	2.1mV	175J	DO35
7	MZ305,A,B,C								
		5	5.0	500m	10m	50	2.0	175J	DO35
8	EQA02-05CD	7	5.0	500m	20m	30	.01	175J	A1ac
9	EQA01-05S	11	5.0	500m	15m	25	.01	125J	A387
10	EQA01-05	22	5.0	500m	15m	25	.01	125J	A387
11	LVA450B	3	5.0	600m	250u	700	1.5	150A	DO7
12	LVA450A	4	5.0	600m	250u	700	1.5	150A	DO7
13	BZ050	5	5.0	1.0	30m	20	0.7	175J	DO41
14	AW03-05	10	5.0	1.0	60m	15	.50	150J	A277n
15	EQB01-05	21	5.0	1.0	30m	23	.01	140J	A21b
16	RD5.1EB2		5.07	500m	20m	20		175J	A277b
17	RD5.1EL2		5.07	500m	1.0m	20		175J	A277b
18	RD5.1EN2		5.07	500m	5.0m	20		175J	A277b
19	HZ5.1EB2	2.5	5.07	500m	20m	20		175J	DO35
20	RD5.1FB2		5.08	1.0	40m	8.0		175J	A277r
21	RD5.1EL		5.09	500m	1.0m	20		175J	A277b
22	RD5.1EN		5.09	500m	5.0m	20		175J	A277b
23	TZPD5.1		5.1		5.0m	60	1.0		DO35
24	TZPY5.1		5.1		100m	5.0	1.0		DO41
25	BZV49C5V1	5	5.1		5.0m	35	-2	150J	M1008
26	CD4733A	5.0	5.1		49m	7.0		200	u52
27	CD5338B	5	5.1		240m	1.5	2.9	200J	u39b
28	MMBZ5231	5	5.1		20m	17			M500
29	NC5V1	5	5.1		5.0m	60	2.0		u48
30▼	TMPZ5231	5.0	5.1		20m	17			TO236Ø
31	TSC6084CHIP								
		5	5.1		5.0m				u46
32	BZ5.1	5	5.1	.15	5.0m	60		170A	DO7
33	MA3051	5.0	5.1	150m	5.0m	60	2.7	125J	M713b
34	RD5.1MB		5.1	200m	5.0m	130		150J	M500c
35	RD5.1MB2	3	5.1	200m	5.0m	130		150	
36	BZX84C5V1	5	5.1	200m	5.0m	60	2.0	150J	M500d
37	ESZ5.1	5	5.1	200m	10m	8.0 †			TO106
38	RD5AN		5.1	250m	10m	40		175J	A277b
39	1N4625	5	5.1	.25	250u	1.5		200	DO14
40	1N4689	5	5.1	.25	50u			200A	DO14
41	BZY83C5V1	5	5.1	.25	5.0m	75	3.0	150J	C1g
42	CLVA51A	5	5.1	250m	5.0m	7.0 †		175	u20j
43	K511A	5	5.1	250m§	250u	50	2.0mV	175A	DO7
44	PD6007,A	5†	5.1	.25	10m	40		150	A109
45	PD6048	5	5.1	.25	10m	25		150	A2c
46	PD6203	5	5.1	250m	5.0m	15		175A	A109
47	1/4M5.1AZ10								
		10†	5.1	250m	10m	25		175J	E204h
48	K511	10	5.1	250m§	250u	50	2.0mV	175A	DO7
49	C5D5231	10	5.1	320m	20m			150S	M713a
50	BZX88C5V1	5	5.1	350m	5.0m	60	2.0	175J	A412
51	ZTE5.1	11	5.1	350m	5.0m	25	30	150J	DO35
52	MA4051	5	5.1	370m	5.0m	60	2.7	200J	DO35
53	MTZ5.1		5.1	400m	20m	30		175J	DO34
54	TZ5.1		5.1	400m	20m	30		175J	DO35
55	1N5523D	1	5.1	400m§	5.0m	26		175A	DO7
56	1N5729D	1	5.1	400m§	10m	50	2.3	200A	DO35
57	1N6084D	1	5.1	400m§	250u	10	3.0	175L	DO7
58	KZ51C	1	5.1	400m§	5.0m	15		175J	DO7
59	LVA51C	1	5.1	400m	5.0m	15		175A	DO7
60	Z5A5.1	1†	5.1	400m§	5.0m	60	5.0	200J	DO7
61	1N5523C	2	5.1	400m§	5.0m	26		175A	DO7
62	1N5729C	2	5.1	400m§	10m	50	2.3	200A	DO35
63	1N6084C	2	5.1	400m§	250u	10	3.0	175L	DO7
64	BZX79B5V1	2	5.1	400m§	5.0m	60	800uV	200J	DO35
65	HZ5C2	2	5.1	400m	5.0m	100	2.1mV	175J	DO35
66	KZ51B	2	5.1	400m§	5m	15		175A	DO7
67	LVA51B	2	5.1	400m	5.0m	15		175A	DO7
68	RD5.1JSB2(A)								
		2.5	5.10	400m	5.0m	80	2.0	175J	DO34
69	1N751A	5	5.1	400m	20m	17	800m	175A	A1
70	1N3511	5	5.1	.40	20m	14	.80	200A	DO7
71	1N5523B	5	5.1	400m§	5.0m	26		175A	DO7
72	1N5729	5	5.1	400m	10m	50 †	.20mV	200	DO35
73	1N5729B	5	5.1	400m§	10m	50	2.3	200A	DO35
74	1N6084B	5	5.1	400m§	250u	10	3.0	175L	DO7
75	1S2051A	5	5.1	.40	5.0m	80	1.0	150A	A1
76	1S7051A	5	5.1	.40	5.0m	80	1.0	150A	A1
77	BZX79C5V1	5	5.1	400m§	5.0m	60	800uV	200J	DO35
78	BZX96C5V1	5	5.1	400m	5.0m	60	1.0	150J	DO7
79	CD751A	5	5.1	400m	20m	17	1.0	200J	u39a
80	CD4625	5	5.1	400m	250u	1.5k	3.0	200J	u39a
81	CD5231B	5	5.1	400m	20m	17	3.0	200J	u39a
82	CH751	5	5.1	400m	20m	14	1.0	200J	u10
83	CH4625	5	5.1	400m	250u	1.5k	3.0	200J	u10
84	CH5231	5	5.1	400m	20m	17	3.0	200J	u10
85	GSZ5.1A	5	5.1	400m	20m	18			A69a
86	K510A	5	5.1	400m§	10m	20	3.2mV	175A	DO7
87	KZ51A	5	5.1	400m§	5m	15		175A	DO7
88	KZ351A	5†	5.1	400m	5.0m	10		175A	DO7
89	LVA51A	5	5.1	400m	5.0m	15		175A	DO7
90	MA1051	5	5.1	400m	5.0m	60	2.7	200J	A24d
91	RD5.1JB	5	5.1	400m	5.0m	80		175J	DO35
92	RD5.1JSB(A)								
		5.0	5.1	400m	5.0m	80	2.0	175J	DO34
93	T-LVA51A	5†	5.1	400m	5m	15		175J	DO35
94	T-LVA351A	5†	5.1	400m	5m	10		175J	DO35
95	Z5B5.1	5†	5.1	400m§	5.0m	60	5.0	200J	DO7
96	ZMM751A	5.0	5.1	400m§	20m	17	0.8	175J	F139
97	1N751	10	5.1	400m	20m	17	800m	175A	A1
98	1N5523A	10	5.1	400m§	5.0m			175A	DO7
99	1N6084A	10	5.1	400m§	250u	10	3.0	175L	DO7
100	1S2051	10	5.1	.40	5.0m	85	1.0	150A	A1
101	1S7051,B	10†	5.1	.40	5.0m	85	1.0	150A	A1
102	GSZ5.1	10	5.1	400m	20m	18			A69a
103	K510	10	5.1	400m§	10m	20	3.2mV	175A	DO7
104	ZMM751	10	5.1	400m§	20m	17	0.8	175J	F139
105	1N5523	20	5.1	400m§	5.0m			175A	DO7
106	1N6084	20	5.1	400m§	250u	10	3.0	175L	DO7
107	GZA5.1		5.1	500m		15 †	5.0		A159
108	1N5993D	1	5.1	500m	5.0m	50		200J	DO35
109	Z0A5.1	1†	5.1	500m	5.0m	25 †	6.0	200J	DO29
110	1N5993C	2	5.1	500m	5.0m	50		200J	DO35
111	HZ5HC2	2	5.1	500m	5.0m	100	2.1mV	175J	DO35
112	1N5231B	5	5.1	500m	20m	14	3.0	200A	A398a
113	1N5847B	5	5.1	500m	20m	17		150C	M859
114	1N5993B	5	5.1	500m	5.0m	50		200J	DO35
115	BZX46C5V1	5	5.1	500m	20m	17	5.0	175A	DO35
116	BZX55C5V1	5	5.1	500m	5.0m	50	2.0	175A	DO35
117	BZX83C5V1	5	5.1	500m	5.0m	60	2.0	175A	DO35
118	CD51	5	5.1	500m	5.0m	10		200J	DO7
119	CTZ5.1A	5	5.1	500m	20m	140	100	200	DO35
120	MA5051	5	5.1	500m	5.0m	60	2.5	125J	M990
121	MLL5231B	5.0	5.1	500m§	20m	17	3.0	200J	F140
122	PS8906	5	5.1	.50	20m	14	.50	150	A60p
123	RD5.1EB	5	5.1	500m	20m	30	1.0	175J	DO35
124	TS05100	5	5.1	500m	250u			200J	DO35
125	Z0B5.1	5†	5.1	500m	5.0m	25 †	6.0	200J	DO29
126	ZMM5231B	5.0	5.1	500m§	20m	17	3.0	200J	F139
127	ZPD5V1	5†	5.1	500m	5.0m	480	.30mV	175J	DO35
128	ZPD5.1	5	5.1	.50	5.0m	60	500m	175J	DO35
129	05Z5.1	6	5.1	500m	5.0m	50	3.0	175J	DO35
130	BZX97C5V1	6	5.1	500m	5.0m	35	2.0	175J	DO35
131	ZMM5.1	6†	5.1	500m	5.0m	60	0.5	175J	F135
132	BZV55C5V1	6.2	5.1	500m	5.0m	60	0.8	200J	F139
133	BZV60C5V1	6.2	5.1	500m	5.0m	60	0.8	200J	DO34
134	1N5231A	10	5.1	500m	20m	14	3.0	200A	A398a
135	1N5847A	10	5.1	500m	20m	17		150C	M859
136	1N5993A	10	5.1	500m	5.0m	88		200J	DO35
137	CTZ5.1	10	5.1	500m	20m	140	100	200	DO35
138	MLL5231A	10	5.1	500m§	20m	17	3.0	200J	F140
139▼	SZ.5-5.1-10-25								
		10	5.1	500m	25m			175	u5a
140	ZMM5231A	10	5.1	500m§	20m	17	3.0	200J	F139
141	1N5231	20†	5.1	.50	20m			200A	A398a
142	1N5993	20	5.1	500m	5.0m	88		200J	DO35
143	MLL5231	20	5.1	500m§	20m	17		200J	F140
144▼	SZ.5-5.1-20-25								
		20	5.1	500m	25m			175	u5a
145	ZMM5231	20	5.1	500m§	20m	17	3.0	200J	F139
146	LVA351C	1	5.1	600m	5.0m	10		175A	DO14
147	LNA351B	2	5.1	600m	5.0m	10		175A	DO7
148	LVA351B	2	5.1	600m	5.0m	10		175A	DO14
149	GLA51,A,B	5†	5.1	600m	5.0m	10	2.5	175	DO7
150	LNA351A	5	5.1	600m	5.0m	10		175A	DO7
151	LVA351A	5	5.1	600m	5.0m	10		175A	DO14
152	LNA351	10	5.1	600m	5.0m	10		175A	DO7
153	MLNA351B	2	5.1	750m	5.0m	10		175A	A249e
154	BZV41C5V1	5	5.1	750m	5.0m	60	2.0	175S	A412
155	MGLA51,A,B	5†	5.1	750m	5.0m	10	2.5	175A	A249e
156	MLNA351A	5	5.1	750m	5.0m	10		175A	A249e
157	MLV751A	5	5.1	750m	20m	14		175A	A2j
158	TSZ5.1	5	5.1	750m	10m	12			TO39
159	MLNA351	10	5.1	750m	5.0m	10		175A	A249e
160	HZ5.1PB		5.1	800m	40m	8.0		175J	DO41
161	AP5.1A,B		5.1	1.0 †	20m	35			DO35
162	BZX78C5V1		5.1	1.0	50m	10			
163	MA2051		5.1	1.0	40m	10		200J	A277r
164	RD5BN		5.1	1.0	40m	15		150J	A427
165	TSC4733CHIP								
			5.1	1.0	49m	7.0			u46
166	LVA1051C	1	5.1	1.0	5.0m	15		175	A266c
167	Z4A5.1	1†	5.1	1.0	100m	4.0	2.0	200J	DO29
168	LVA1051B	2	5.1	1.0	5.0m	15		175	A266c
169	SZ5.1	2†	5.1	1.0	20m	10 †	1.9	150A	A3g
170	1N3732	5	5.1	1.0	40m	8.5		175	DO1
171	1N3826A	5	5.1	1.0	49m	7.0	500m	175A	A31a
172	1N4654	5	5.1	1.0	49m	550	3.0	200A	DO15
173	1N4733A	5	5.1	1.0	49m	7.0		200A	DO41
174	APD5.1A,B	5†	5.1	1.0 †	49m	10			A1rx
175	BZV85C5V1	5	5.1	1.0	45m	10	1.4mV	200J	DO41
176	BZX85C5V1	5	5.1	1.0 §	45m	10	4.0	150A	DO41
177	CD4733	5	5.1	1.0	49m	7.0	1.0	200J	u39a
178	CH4733	5	5.1	1.0	49m	7.0	1.0	200J	u10
179	LVA1051A	5	5.1	1.0	5.0m	15		175	A266c
180	PL5V1Z	5	5.1	1.0	100m	5.0	2.5	150J	
181	PR234-RT	5	5.1	1.0	4.9m	7.0 †			DO7
182	RD5.1FB	5	5.1	1.0	40m	8.0		175J	A297c
183	RD5.1P	5.0	5.1	1.0	5.0m	60	0.	150J	M1008
184▼	SZ1-5.1-5-25								
		5.0	5.1	1.0	25m			175	u5b
185	Z4B5.1	5†	5.1	1.0	100m	4.0	2.0	200J	DO29
186	Z5.1	5†	5.1	1.0	20m	2.6 †	1.0	150A	DO41
187	ZB5.1B	5	5.1	1.0	49m	550			A1ty
188	ZM4733A	5.0	5.1	1.0 §	49m	7.0		200J	F139
189	1N3826	10	5.1	1.0	49m	7.0	500m	175A	A31a
190	1N4733	10	5.1	1.0	49m	7.0		200A	DO41
191▼	SZ1-5.1-10-25								
		10	5.1	1.0	25m			175	u5b
192	ZB5.1A	10	5.1	1.0	49m	550			A1ty
193	ZM4733	10	5.1	1.0 §	49m	7.0		200J	F139
194▼	SZ1-5.1-20-25								
		20	5.1	1.0	25m			175	u5b
195	ZB5.1	20	5.1	1.0	49m	550			A1ty
196	BZX87C5V1	5	5.1	1.3	50m	10	980m	200J	A60al
197	BZY97C5V1	5	5.1	1.3	100m	5.0	6.0		A1rx
198	ZD5.1	5	5.1	1.3	100	5.0	1.0	150J	DO13
199	ZY5.1	5	5.1	1.3	100m	5.0	6.0	150J	A1bg
200	BZD10C5V1	6	5.1	1.3	100m	5.0	6.0		DO13
201	BZW22C5V1	6	5.1	1.3	100m	5.0	6.0		DO41
202	ZMY5.1	6	5.1	1.3	100m	5.0	5	200J	F149
203	ZPY5.1	11	5.1	1.3	100m	5.0	5.0	200J	DO41
204	1N5918D	1	5.1	1.5	73m	4.0		200J	DO41
205	1N5918C	2	5.1	1.5	73m	4.0		200J	DO41
206	1N5918B	5	5.1	1.5	73m	4.0		200J	DO41
207	BZY96C5V1	5	5.1	1.5	100m	5.0	784m	175J	DO1
208	1N5918A	10	5.1	1.5	73m	4.0		200J	DO41
209	1N5918	20	5.1	1.5	73m	4.0		200J	DO41

SYMBOLS AND CODES EXPLAINED IN INTERPRETER

2. VOLTAGE REFERENCE DIODES - $V_Z \geq 4.7$ V (Cont'd)

IN ORDER OF: (1) REF. VOLTAGE (2) PD MAX (3) TOLERANCE & (4) TYPE NUMBER

LINE No.	4 TYPE No.	3 TOL ± (%)	1 NOM. REF. VOLT. (V)	2 PD @ 25°C MAX (W)	TEST CUR. Izt (A)	DYN. IMP. MAX (Ω)	TEMP. COEFF Tc MAX	TEMP MAX (°C)	DWG. NO.
1	2EZ5.1D5	5	5.1	2.0	98m	3.5		200J	A1ay
2	BZV47C5V1	5	5.1	2.0	100m	5.0	1.0	175J	A344r
3	LMZ5.1A	5	5.1	2.0	98m	4.0	3.0	150A	DO41
4	ZBC5.1B	5	5.1	2.0	98m	7.0			A1ty
5	2EZ5.1D10	10	5.1	2.0	98m	3.5		200J	A1ay
6	LMZ5.1	10	5.1	2.0	98m	4.0	3.0	150A	DO41
7	ZBC5.1A	10	5.1	2.0	98m	7.0			A1ty
8	2EZ5.1D	20	5.1	2.0	98m	3.5		200J	A1ay
9	ZBC5.1	20	5.1	2.0	98m	7.0			A1ty
10	1N5013A	5	5.1	2.5	122m	3.0	1.0	150	A1gn
11	Z2B5.1	5†	5.1	2.5	100m	4.0	1.0	200J	DO1
12	1N5013	10	5.1	2.5	122m	3.0	1.0	150	A1gn
13	RD5CN		5.1	3.0	120m	10		150J	S547
14	3EZ5.1D1	1.0	5.1	3.0	147m	3.5		150J	A1ay
15	3EZ5.1D2	2.0	5.1	3.0	147m	3.5		150J	A1ay
16	3EZ5.1D3	3.0	5.1	3.0	147m	3.5		150J	A1ay
17	3EZ5.1D4	4.0	5.1	3.0	147m	3.5		150J	A1ay
18	3EZ5.1D5	5	5.1	3.0	147m	3.5		200J	A1ay
19	BZV16C5V1	5	5.1	3.0	98m	7.0	1.0	175J	DO13
20	ZCC5.1B	5	5.1	3.0	150m	2.0			A1ey
21	3EZ5.1D10	10	5.1	3.0	147m	3.5		200J	A1ay
22	ZCC5.1A	10	5.1	3.0	150m	2.0			A1ey
23	3EZ5.1D	20	5.1	3.0	147m	3.5		200J	A1ay
24	ZCC5.1	20	5.1	3.0	150m	2.0			A1ey
25▼	SZ3-5.1-5-25	5.0	5.1	5.0	25m			175	u5c
26▼	SZ3-5.1-10-25	10	5.1	5.0	25m			175	u5c
27▼	SZ3-5.1-20-25	20	5.1	5.0	25m			175	u5c
28	HZ5C3	2	5.2	400m	5.0m	100	2.1mV	175J	DO35
29	HZ5HC3	2	5.2	500m	5.0m	100	2.1mV	175J	DO35
30	BZ052	5	5.2	1.0	30m	15	1.0	175J	DO41
31	RD5.1EB3		5.23	500m	20m	20		175J	A277b
32	RD5.1EL3		5.23	500m	1.0m	20		175J	A277b
33	RD5.1EN3		5.23	500m	5.0m	20		175J	A277b
34	HZ5.1EB3	2.7	5.23	500m	20m	20		175J	DO35
35	RD5.1FB3		5.24	1.0	40m	8.0		175J	A277r
36	RD5.1JSB3(A)	2.5	5.27	400m	5.0m	80	2.0	175J	DO34
37	RD5.1MB3	3	5.3	200m	5.0m	130		150	
38	MZA205	5	5.3	300m	10m	30	1.9	175J	DO35
39	LVA153C	1	5.3	400m	250u	500	2.5	150A	DO14
40	LVA453C	1	5.3	400m	250u	250	2.5	150A	DO7
41	KZ453C	2	5.3	400m§	250u	250	2.5	175A	DO7
42	LVA153B	2	5.3	400m	250u	500	2.5	150A	DO14
43	LVA453B	2	5.3	400m	250u	250	2.5	150A	DO7
44	KZ453B	3	5.3	400m§	250u	250	2.5	175A	DO7
45	KZ453A	4	5.3	400m§	250u	250	2.5	175A	DO7
46	LVA153A	4	5.3	400m	250u	500	2.5	150A	DO14
47	LVA453A	4	5.3	400m	250u	250	2.5	150A	DO7
48	T-LVA453A	4†	5.3	400m	250u	250	1.3mV	175J	DO35
49	BZY88C5V6	5	5.3	400m	5.0m	55	350m	200J	DO7
50	KZ453	5†	5.3	400m		250	1.3	175A	DO7
51	LVA153	9	5.3	400m	250u	500	2.5	150A	DO14
52	LVA453	9	5.3	400m	250u	250	2.5	150A	DO14
53	EQA02-05EF	8	5.3	500m	20m	30	.01	175J	A1ac
54	EQA01-05T	11	5.3	500m	15m	8.0	.01	125J	A387
55	HZ6A1	3	5.35	400m	5.0m	35	400uV	175J	DO35
56	HZ6A1L	3	5.35	400m	500u	150		175J	DO35
57	HZ6HA1	3	5.35	500m	5.0m	35	400uV	175J	DO35
58	RD6AL		5.4	250m	10m	30		175J	A277b
59	1N5678A	10	5.4	250m§	20m	25		125A	C29n
60	RD5.1EC	5	5.4	500m	20m	30	1.5	175J	DO35
61	HZ5.1PC		5.4	800m	40m	8.0		175J	DO41
62	RD6BL		5.4	1.0	40m	8.0		150J	A427
63	BZ054	5	5.4	1.0	30m	15	1.3	175J	DO41
64	RD5.1FC	5	5.4	1.0	40m	8.0		175J	A297c
65	RD6CL		5.4	3.0	120m	6.0		150J	S547
66	RD5.6EB1		5.41	500m	20m	13		175J	A277b
67	RD5.6EL1		5.41	500m	1.0m	13		175J	A277b
68	RD5.6EN1		5.41	500m	5.0m	13		175J	A277b
69	HZ5.6EB1	2.5	5.42	500m	20m	13		175J	DO35
70	RD5.6FB1		5.42	1.0	40m	8.0		175J	A277r
71	HZS5.6JB1	2.5	5.44	400m	5.0m	20		200J	A380d
72	RD5.6JSB1(A)	2.5	5.44	400m	5.0m	60	2.3	175J	DO34
73	HZ6A2	3	5.45	400m	5.0m	35	400uV	175J	DO35
74	HZ6A2L	3	5.45	400m	500u	150		175J	DO35
75	HZ6HA2	3	5.45	500m	5.0m	35	400uV	175J	DO35
76	RD5.6EB2		5.49	500m	20m	13		175J	A277b
77	RD5.6EL2		5.49	500m	1.0m	13		175J	A277b
78	RD5.6EN2		5.49	500m	5.0m	13		175J	A277b
79	RD5.6MB1	3	5.5	200m	5.0m	80		150	
80	1N2033A	5	5.5	.75	10m	20	3.0	150J	DO12
81	1N2214	2	5.5	1.0	35m	5.6	3.0	165S	DO1
82	1S221	10	5.5	1.0	50m	14	3.6	150J	A56a
83	HZ6A3	3	5.55	400m	5.0m	35	400uV	175J	DO35
84	HZ6A3L	3	5.55	400m	500u	150		175J	DO35
85	HZ6HA3	3	5.55	500m	5.0m	35	400uV	175J	DO35
86	RD5.6EL		5.59	500m	1.0m	13		175J	A277b
87	RD5.6EN		5.59	500m	5.0m	13		175J	A277b
88	HZ5.6EB2	2.5	5.59	500m	20m	13		175J	DO35
89	TZPD5.6		5.6		5.0m	40	2.0		DO35
90	TZPY5.6		5.6		100m	2.0	1.0		DO41
91	BZV49C5V6	5	5.6		5.0m	25	-1	150J	M1008
92	CD4734A	5.0	5.6		45m	5.0		200	u52
93	CD5339B	5	5.6		220m	1.0	3.6	200J	u39b
94	MMBZ5232	5	5.6		20m	11			M500
95	NC5V6	5	5.6		5.0m	40	3.0		u48
96▼	TMPZ5232	5.0	5.6		20m	11			TO236Ø
97	TSC6085CHIP	5	5.6		1.0m				u46
98	BZX55D5V6	10	5.6		5.0m	60			A1ct
99	BZY83D5V6	10	5.6		100m	4.0	5.0		S442
100	1N1983B	1	5.6	150m	5.0m	8.0	1.0	150	C1
101	1N1983A	5	5.6	150m	5.0m	8.0	1.0	150	C1
102	BZ5.6	5	5.6	.15	5.0m	25		170A	DO7
103	MA3056	5.0	5.6	150m	5.0m	40	2.0	125J	M713b
104	1N1983	10	5.6	150m	5.0m	8.0	1.0	150	C1
105	RD5.6MB		5.6	200m	5.0m	80		150J	M500c
106	1N1929B	1	5.6	200m	5.0m	8.0	1.0	150A	A82e
107	RD5.6MB2	3	5.6	200m	5.0m	80		150	
108	1N1929A	5	5.6	200m	5.0m	8.0	1.0	150A	A82e
109	BZX84C5V6	5	5.6	200m	5.0m	40	3.0	150J	M500d
110	ESZ5.6	5	5.6	200m	10m	8.0 †			TO106
111	1N1929	10	5.6	200m	5.0m	8.0	1.0	150A	A82e
112	1N708A	5	5.6	250m	25m	3.6	1.5	175A	DO7
113	1N4626	5	5.6	.25	250u	1.4		200	DO14
114	1N4690	5	5.6	.25	50u			200A	DO14
115	02Z5.6A	5	5.6	250m	10m	30	3.2	175J	DO35
116	BZY83C5V6	5	5.6	.25	5.0m	60	4.0	150J	C1g
117	CLVA56A	5	5.6	250m	1.0m	16 †		175	u20j
118	K561A	5	5.6	250m§	250u	45	2.0mV	175A	DO7
119	PD6008,A	5†	5.6	.25	10m	30		150	A109
120	PD6049	5	5.6	.25	10m	20		150	A2c
121	PD6204	5	5.6	250m	1.0m	40		175A	A109
122	1/4M5.6AZ10	10†	5.6	250m	10m	20		175J	E204h
123	1N708	10	5.6	250m	25m	3.6	1.5	175A	DO7
124	K561	10	5.6	250m§	250u	45	2.0mV	175A	DO7
125	1N708B	20	5.6	.25	25m	3.6			DO7
126	PTC502	10	5.6	252m†	45m	5.0			A1bc
127	BZ752	5	5.6	300m	20m	11	2.8	175S	M765
128	BZ752F	5	5.6	300m	20m	11	2.8	175S	TO86
129	BZ752T	5	5.6	300m	20m	11	2.8	175S	TO18
130	MC6007,A	5†	5.6	.30	10m	8.0		175	A2m
131	BZX88C5V6	5	5.6	350m	5.0m	25	3.0	175J	A412
132	MA4056	5	5.6	370m	5.0m	40	2.0	200J	DO34
133	MTZ5.6		5.6	400m	20m	25		175J	DO34
134	TZ5.6		5.6	400m	20m	25		175J	DO35
135	1N5524D	1	5.6	400m§	3.0m	30		175A	DO7
136	1N5730D	1	5.6	400m§	10m	25	2.1	200A	DO35
137	1N6085D	1	5.6	400m§	50u	40	4.0	175L	DO7
138	KZ56C	1	5.6	400m§	1.0m	40		175J	DO7
139	LVA56C	1	5.6	400m	1.0m	40		175A	DO7
140	LVA156C	1	5.6	400m	250u	200	3.5	150A	DO14
141	LVA456C	1	5.6	400m	250u	100	3.5	150A	DO7
142	Z5A5.6	1†	5.6	400m§	5.0m	50	5.0	200J	DO7
143	1N5524C	2	5.6	400m§	3.0m	30		175A	DO7
144	1N5730C	2	5.6	400m§	10m	25	2.1	200A	DO35
145	1N6085C	2	5.6	400m§	50u	40	4.0	175L	DO7
146	BZX79B5V6	2	5.6	400m§	5.0m	40	1.2mV	200J	DO35
147	KZ56B	2	5.6	400m§	1.0m	40		175A	DO7
148	KZ456C	2	5.6	400m§	250u	100	3.5	175A	DO7
149	LVA56B	2	5.6	400m	1.0m	40		175A	DO7
150	LVA156B	2	5.6	400m	250u	200	3.5	150A	DO14
151	LVA456B	2	5.6	400m	250u	100	3.5	150A	DO7
152	KZ456B	3	5.6	400m§	250u	100	3.5	175A	DO7
153	KZ456A	4	5.6	400m§	250u	100	3.5	175A	DO7
154	LVA156A	4	5.6	400m	250u	200	3.5	150A	DO14
155	LVA456A	4	5.6	400m	250u	100	3.5	150A	DO7
156	T-LVA456A	4†	5.6	400m	250u	100	1.9mV	175J	DO35
157	1N752A	5	5.6	400m	20m	11	600m	175A	A1
158	1N3512	5	5.6	.40	20m	8.0	.60	200A	DO7
159	1N5524B	5	5.6	400m§	3.0m	30		175A	DO7
160	1N5730	5	5.6	400m	10m	25 †	1.2mV	200	DO35
161	1N5730B	5	5.6	400m§	10m	25	2.1	200A	DO35
162	1N6085B	5	5.6	400m§	50u	40	4.0	175L	DO7
163	1S2056A	5	5.6	.40	5.0m	75	.50	150A	A1
164	1S7056A	5	5.6	.40	5.0m	75	.50	150A	A1
165	BZX79C5V6	5	5.6	400m§	5.0m	40	1.2mV	200J	DO35
166	BZX96C5V6	5	5.6	400m	5.0m	40	2.5	150J	DO7
167	CD752A	5	5.6	400m	20m	11	3.0	200J	u39a
168	CD4626	5	5.6	400m	250u	1.4k	4.0	200J	u39a
169	CD5232B	5	5.6	400m	20m	11	3.8	200J	u39a
170	CH752	5	5.6	400m	20m	8.0	3.0	200J	u10
171	CH4626	5	5.6	400m	250u	1.4k	4.0	200J	u10
172	CH5232	5	5.6	400m	20m	11	3.8	200J	u10
173	GSZ5.6A	5	5.6	400m	20m	12			A69a
174	KZ56A	5	5.6	400m§	1.0m	40		175A	DO7
175	KZ356A	5†	5.6	400m	1.0m	40		175A	DO7
176	KZ456	5†	5.6	400m		100	1.9	175A	DO7
177	LVA56A	5	5.6	400m	1.0m	40		175A	DO7
178	MA1056	5	5.6	400m	5.0m	40	2.0	200J	A24d
179	RD5.6JB	5	5.6	400m	5.0m	60		175J	DO35
180	RD5.6JSB(A)	5.0	5.6	400m	5.0m	60	2.3	175J	DO34
181	T-LVA56A	5†	5.6	400m	1.0m	40		175J	DO35
182	T-LVA356A	5†	5.6	400m	1.0m	40		175J	DO35
183	Z5B5.6	5†	5.6	400m§	5.0m	50	5.0	200J	DO7
184	ZMM752A	5.0	5.6	400m§	20m	11	0.6	175J	F139
185	LVA156	9	5.6	400m	250u	200	3.5	150A	DO14
186	LVA456	9	5.6	400m	250u	100	3.5	150A	DO14
187	1N752	10	5.6	400m	20m	11	600m	175A	A1
188	1N5524A	10	5.6	400m§	3.0m			175A	DO7
189	1N6085A	10	5.6	400m§	50u	40	4.0	175L	DO7
190	1S2056	10	5.6	.40	5.0m	80	.50	150A	A1
191	1S7056,B	10†	5.6	400m	5.0m	80	.50	150A	A1
192	GSZ5.6	10	5.6	400m	20m	12			A69a
193	ZMM752	10	5.6	400m§	20m	11	0.6	175J	F139
194	1N5524	20	5.6	400m§	3.0m			175A	DO7
195	1N6085	20	5.6	400m§	50u	40	4.0	175L	DO7
196	GZA5.6		5.6	500m		4.0 †	5.0		A159
197	1N5994D	1	5.6	500m	5.0m	25		200J	DO35
198	Z0A5.6	1†	5.6	500m	5.0m	20 †	6.0	200J	DO29
199	1N5994C	2	5.6	500m	5.0m	25		200J	DO35
200	1N5232B	5	5.6	500m	20m	8.0	3.8	200A	A398a
201	1N5848B	5	5.6	500m	20m	15		150C	M859
202	1N5994B	5	5.6	500m	5.0m	25		200J	DO35
203	BZX46C5V6	5	5.6	500m	20m	11	6.0	175A	DO35
204	BZX55C5V6	5	5.6	500m	5.0m	40	3.0	175A	DO35
205	BZX83C5V6	5	5.6	500m	5.0m	40	3.0	175A	DO35
206	CD56	5	5.6	500m	1.0m	40		200J	DO7
207	CTZ5.6A	5	5.6	500m	20m	80	80	200	DO35
208	MA5056	5	5.6	500m	5.0m	40	2.0	125J	M990
209	MLL5233B	5.0	5.6	500m§	20m	11	3.8	200J	F140
210	MTZ607,A	5†	5.6	.50	10m	8.0		175A	A60e
211	PS8907	5	5.6	.50	20m	8.0	2.0	150	A60p
212	RD5.6EB	5	5.6	500m	20m	25	2.2	175J	DO35

SYMBOLS AND CODES EXPLAINED IN INTERPRETER

2. VOLTAGE REFERENCE DIODES - $V_Z \geq 4.7$ V (Cont'd)

IN ORDER OF: (1) REF. VOLTAGE (2) PD MAX (3) TOLERANCE & (4) TYPE NUMBER

LINE No.	4 TYPE No.	3 TOL ± (%)	1 NOM. REF. VOLT. (V)	2 PD @ 25°C MAX (W)	TEST CUR. Izt (A)	DYN. IMP. MAX (Ω)	TEMP. COEFF Tc MAX	TEMP MAX (°C)	DWG. NO.
1▼	SZ.5-5.6-5-25								
		5.0	5.6	500m	25m			175	u5a
2	TS05600	5	5.6	500m	25u			200J	DO35
3	Z0B5.6	5†	5.6	500m	5.0m	20 †	6.0	200J	DO29
4	ZMM5232B	5.0	5.6	500m§	20m	11	3.8	200J	F139
5	ZPD5V6	5†	5.6	500m	5.0m	400	1.1mV	175J	DO35
6	ZPD5.6	5	5.6	500m	5.0m	40	2.0	175J	DO35
7	05Z5.6	6.0	5.6	500m	5.0m	30	3.2	175J	DO35
8	BZX97C5V6	7	5.6	500m	5.0m	25	3.0	175J	DO35
9	ZMM5.6	7†	5.6	500m	5.0m	40	2.0	175J	F135
10	BZV55C5V6	7.6	5.6	500m	5.0m	40	1.2	200J	F139
11	BZV60C5V6	7.6	5.6	500m	5.0m	40	1.2	200J	DO34
12	1N3399	10	5.6	500m	20m	35	7.0	200S	P5
13	1N5232A	10	5.6	500m	20m	8.0	3.8	200A	A398a
14	1N5848A	10	5.6	500m	20m	15		150C	M859
15	1N5994A	10	5.6	500m	5.0m	70		200J	DO35
16	CTZ5.6	10	5.6	500m	20m	80	80	200	DO35
17	EQA01-06R	10	5.6	500m	15m	8.0	.03	125J	A387
18	MLL5232A	10	5.6	500m§	20m	11	3.8	200J	F140
19▼	SZ.5-5.6-10-25								
		10	5.6	500m	25m			175	u5a
20	ZMM5232A	10	5.6	500m§	20m	11	3.8	200J	F139
21	1N5232	20†	5.6	.50	20m			200A	A398a
22	1N5994	20	5.6	500m	5.0m	70		200J	DO35
23	MLL5232	20	5.6	500m§	20m	11		200J	F140
24▼	SZ.5-5.6-20-25								
		20	5.6	500m	25m			175	u5a
25	ZMM5232	20	5.6	500m§	20m	11	3.8	200J	F139
26	LVA356C	1	5.6	600m	1.0m	40		175A	DO14
27	LNA356B	2	5.6	600m	1.0m	40		175A	DO7
28	LVA356B	2	5.6	600m	1.0m	40		175A	DO14
29	GLA56,A,B	5†	5.6	600m	1.0m	40	3.3	175	DO7
30	LNA356A	5	5.6	600m	1.0m	40		175A	DO7
31	LVA356A	5	5.6	600m	1.0m	40		175A	DO14
32	LNA356	10	5.6	600m	1.0m	40		175A	DO7
33	MLNA356B	2	5.6	750m	1.0m	40		175A	A249e
34	1N1509A	5	5.6	750m	26m	11	3.0	200S	DO12
35	BZV41C5V6	5	5.6	750m	5.0m	40	3.0	175S	A412
36	MC6107,A	5†	5.6	.75	25m	8.0		175	A2d
37	MGLA56,A,B	5†	5.6	750m	1.0m	40	3.3	175A	A249e
38	MLNA356A	5	5.6	750m	1.0m	40		175A	A249e
39	MLV752A	5	5.6	750m	20m	8.0		175A	A2j
40	TSZ5.6	5	5.6	750m	10m	12			TO39
41	1N1509	10	5.6	750m	26m	11	3.0	200S	DO12
42	MLNA356	10	5.6	750m	1.0m	40		175A	A249e
43	HZ5.6PB		5.6	800m	40m	8.0		175J	DO41
44	AP5.6A,B		5.6	1.0 †	20m	35			DO35
45	BZX78C5V6		5.6	1.0	50m	5.0	1.5mV		
46	MA2056		5.6	1.0	40m	8.0	1.5	200J	A277r
47	RD5.6FB2		5.60	1.0	40m	8.0		175J	A277r
48	TSC4734CHIP								
			5.6	1.0	45m	5.0			u46
49	LVA1056C	1	5.6	1.0	1.0m	40		175	A266c
50	Z4A5.6	1†	5.6	1.0	50m	3.0	2.0	200J	DO29
51	LVA1056B	2	5.6	1.0	1.0m	40		175	A266c
52	SZ5.6	2†	5.6	1.0	20m	6.0 †	900m	150A	A3g
53	1N1520A	5	5.6	1.0	35m	10	3.0	200S	DO3
54	1N1765A	5	5.6	1.0	100m	1.2		175A	DO13Ø
55	1N3827A	5	5.6	1.0	45m	5.0	2.0	175A	A31a
56	1N4655	5	5.6	1.0	45m	600	4.0	200A	DO15
57	1N4734A	5	5.6	1.0	45m	5.0		200A	DO41
58	APD5.6A,B	5†	5.6	1.0 †	45m	10			A1rx
59	BZ056	5	5.6	1.0	30m	10	2.1	175J	DO41
60	BZV85C5V6	5	5.6	1.0	45m	7.0	1.4mV	200J	DO41
61	BZX85C5V6	5	5.6	1.0 §	45m	7.0	4.5	150A	DO41
62	CD4734	5	5.6	1.0	45m	5.0	3.0	200J	u39a
63	CH4734	5	5.6	1.0	45m	5.0	3.0	200J	u10
64	LVA1056A	5	5.6	1.0	1.0m	40		175	A266c
65	PL5V6Z	5	5.6	1.0	100m	2.0	3.2	150J	
66	PR235-RT	5	5.6	1.0	4.5m	5.0 †			DO7
67	RD5.6P	5.0	5.6	1.0	5.0m	40	2.0	150J	M1008
68▼	SZ1-5.6-5-25								
		5.0	5.6	1.0	25m			175	u5b
69	VR5.6,A,B	5†	5.6	1.0	45m	5.0		125A	A1b
70	Z4B5.6	5†	5.6	1.0	50m	3.0	2.0	200J	DO29
71	Z5.6	5†	5.6	1.0	20m	700m†	3.0	150A	DO41
72	ZB5.6B	5	5.6	1.0	45m	5.0		100C	A1bc
73	ZM4734A	5.0	5.6	1.0 §	45m	5.0		200J	F139
74	1N1520	10	5.6	1.0	35m	10	3.0	200S	DO3
75	1N1765	10	5.6	1.0	100m	1.2		175A	DO13Ø
76	1N3827	10	5.6	1.0	45m	5.0	2.0	175A	A31a
77	1N4734	10	5.6	1.0	45m	5.0		200A	DO41
78	KS456A	10	5.6	1.0	30m	10 †	5.0	100C	A378
79▼	SZ1-5.6-10-25								
		10	5.6	1.0	25m			175	u5b
80	ZB5.6A	10	5.6	1.0	45m	5.0		100C	A1ty
81	ZM4734	10	5.6	1.0 §	45m	5.0		200J	F139
82▼	SZ1-5.6-20-25								
		20	5.6	1.0	25m			175	u5b
83	ZB5.6	20	5.6	1.0	45m	5.0		100C	A1ty
84	BZX87C5V6	5	5.6	1.3	50m	5.0	2.7	200J	A60al
85	BZY97C5V6	5	5.6	1.3	100m	2.0	5.0		A1rx
86	ZD5.6	5	5.6	1.3	100	2.0	1.0	150J	DO13
87	ZY5.6	5	5.6	1.3	100m	2.0	5.0	150J	A1bg
88	BZD10C5V6	7	5.6	1.3	100m	2.0	5.0		DO13
89	BZW22C5V6	7	5.6	1.3	100m	2.0	5.0		DO41
90	ZMY5.6	7	5.6	1.3	100m	2.0	4	200J	F149
91	ZPY5.6	14	5.6	1.3	100m	2.0	5.0	200J	DO41
92	1N5919D	1	5.6	1.5	66m	2.0		200J	DO41
93	1N5919C	2	5.6	1.5	66m	2.0		200J	DO41
94	1N5919B	5	5.6	1.5	66m	2.0		200J	DO41
95	BZY96C5V6	5	5.6	1.5	100m	4.0	1.7	175J	DO1
96	1N5919A	10	5.6	1.5	66m	2.0		200J	DO41
97	1N5919	20	5.6	1.5	66m	2.0		200J	DO41
98	2EZ5.6D5	5	5.6	2.0	89m	2.5		200J	A1ay
99	2VR5.6,A,B	5†	5.6	2.0	89m	3.0			A3e
100	BZV47C5V6	5	5.6	2.0	100m	2.0	2.5	175J	A344r
101	LMZ5.6A	5	5.6	2.0	89m	4.0	4.0	150A	DO41
102	ZBC5.6B	5	5.6	2.0	90m	5.0			A1ty
103	2EZ5.6D10	10	5.6	2.0	89m	2.5		200J	A1ay
104	LMZ5.6	10	5.6	2.0	89m	4.0	4.0	150A	DO41
105	ZBC5.6A	10	5.6	2.0	90m	5.0			A1ty
106	2EZ5.6D	20	5.6	2.0	89m	2.5		200J	A1ay
107	ZBC5.6	20	5.6	2.0	90m	5.0			A1ty
108	1N5014A	5	5.6	2.5	111m	2.5	3.0	150	A1gn
109	Z2B5.6	5†	5.6	2.5	50m	3.0	2.0	200J	DO1
110	1N5014	10	5.6	2.5	111m	2.5	3.0	150	A1gn
111	3EZ5.6D1	1.0	5.6	3.0	134m	2.5		150J	A1ay
112	3EZ5.6D2	2.0	5.6	3.0	134m	2.5		150J	A1ay
113	3EZ5.6D3	3.0	5.6	3.0	134m	2.5		150J	A1ay
114	3EZ5.6D4	4.0	5.6	3.0	134m	2.5		150J	A1ay
115	3EZ5.6D5	5	5.6	3.0	134m	2.5		200J	A1ay
116	3VR5.6,A,B	5†	5.6	3.0	.25	5.0			A3al
117	BZV16C5V6	5	5.6	3.0	89m	5.0	2.5	175J	DO13
118	ZCC5.6B	5	5.6	3.0	135m	1.5			A1ey
119	3EZ5.6D10	10	5.6	3.0	134m	2.5		200J	A1ay
120	ZCC5.6A	10	5.6	3.0	135m	1.5			A1ey
121	3EZ5.6D	20	5.6	3.0	134m	2.5		200J	A1ay
122	ZCC5.6	20	5.6	3.0	135m	1.5			A1ey
123	1N1590A	5	5.6	3.5	110m	3.0	3.0	200S	DO4
124	1N1590	10	5.6	3.5	110m	3.0	3.0	200S	DO4
125▼	SZ3-5.6-5-25								
		5.0	5.6	5.0	25m			175	u5c
126▼	SZ3-5.6-10-25								
		10	5.6	5.0	25m			175	u5c
127▼	SZ3-5.6-20-25								
		20	5.6	5.0	25m			175	u5c
128	HZS5.6JB2	2.5	5.62	400m	5.0m	20		200J	A380d
129	RD5.6JSB2(A)								
		2.5	5.62	400m	5.0m	60	2.3	175J	DO34
130	1N1956B	1	5.65	400m	5.0m	8.0	1.0	150	DO7
131	HZ6B1	3	5.65	400m	5.0m	35	400uV	175J	DO35
132	HZ6B1L	3	5.65	400m	500u	80		175J	DO35
133	1N1956A	5	5.65	400m	5.0m	8.0	1.0	150	DO7
134	1N1956	10	5.65	400m	5.0m	8.0	1.0	150	DO7
135	HZ6HB1	3	5.65	500m	5.0m	35	400uV	175	DO35
136	RD5.6FB	6	5.65	1.0	40m	8.0		175J	A297c
137	RD6AM		5.7	250m	10m	30		175J	A277b
138	RD6BM		5.7	1.0	40m	8.0		150J	A427
139	RD6CM		5.7	3.0	120m	6.0		150J	S547
140	HZ6B2	3	5.75	400m	5.0m	35	400uV	175J	DO35
141	HZ6B2L	3	5.75	400m	500u	80		175J	DO35
142	HZ6HB2	3	5.75	500m	5.0m	35	400uV	175	DO35
143	RD5.6EB3		5.76	500m	20m	13		175J	A277b
144	RD5.6EL3		5.76	500m	1.0m	13		175J	A277b
145	RD5.6EN3		5.76	500m	5.0m	13		175J	A277b
146	HZ5.6EB3	2.7	5.76	500m	20m	13		175J	DO35
147	1N469B	1	5.8	200m	5.0m	20 †		150S	C1
148	RD5.6MB3	3	5.8	200m	5.0m	80		150	
149	1N469A	5	5.8	200m	5.0m	20 †		150S	C1
150	1N474A	5	5.8	200m	5.0m	40 †		150S	C1
151	CZ5	10	5.8	200m	5.0m				TO106
152	RD6AK		5.8	250m	10m	30		175J	A277b
153	1N762A	5†	5.8	250m	10m	18	3.0	150	DO7
154	1N706A	5.2	5.8	.25	5.0m	20		200A	A398
155	1N469	10	5.8	250m	5.0m	20 †		200A	C1
156	1N706	10.	5.8	.25	10m	20		200A	A398
157	1N762	10	5.8	250m	10m	18		150A	A398
158	PS6469	13	5.8	.50	10m	20		200J	A1gd
159	1N2033	10	5.8	750m	10m	20		150A	DO12
160	RD5.6FB3		5.80	1.0	40m	8.0		175J	A277r
161	RD6BK		5.8	1.0	40m	8.0		150J	A427
162	BZ058	5	5.8	1.0	30m	10	2.6	175J	DO41
163	RD6CK		5.8	3.0	120m	6.0		150J	S547
164	RD5.6JSB3(A)								
		2.5	5.81	400m	5.0m	60	2.3	175J	DO34
165	HZS5.6JB3	2.7	5.81	400m	5.0m	20		200J	A380d
166	HZ6B3	3	5.85	400m	5.0m	35	400uV	175J	DO35
167	HZ6B3L	3	5.85	400m	500u	80		175J	DO35
168	HZ6HB3	3	5.85	500m	5.0m	35	400uV	175	DO35
169	1N377	5	5.9		5.0m	10		150A	A1er
170	KZ459C	1	5.9	400m§	250u	100	3.9	175A	DO7
171	LVA159C	1	5.9	400m	250u	200	3.8	150A	DO14
172	LVA459C	1	5.9	400m	250u	100	3.8	150A	DO7
173	KZ459B	2	5.9	400m§	250u	100	3.9	175A	DO7
174	LVA159B	2	5.9	400m	250u	200	3.8	150A	DO14
175	LVA459B	2	5.9	400m	250u	100	3.8	150A	DO7
176	KZ459A	3	5.9	400m§	250u	100	3.9	175A	DO7
177	LVA159A	3	5.9	400m	250u	200	3.8	150A	DO14
178	LVA459A	3	5.9	400m	250u	100	3.8	150A	DO7
179	T-LVA459A	4†	5.9	400m	250u	100	2.3mV	175J	DO35
180	BZY88C6V2	5	5.9	400m	5.0m	27	3.2	200J	DO7
181	KZ459	5†	5.9	400m		100	2.3	175A	DO7
182	LVA159	8	5.9	400m	250u	200	3.8	150A	DO14
183	LVA459	8	5.9	400m	250u	100	3.8	150A	DO14
184	HZ5.6PC		5.9	800m	40m	8.0		175J	DO41
185	RD6.2EB1		5.93	500m	20m	10		175J	A277b
186	RD6.2EL1		5.93	500m	1.0m	10		175J	A277b
187	RD6.2EN1		5.93	500m	5.0m	10		175J	A277b
188	HZ6.2EB1	2.5	5.94	500m	20m	10		175J	DO35
189	HZ6C1	3	5.95	400m	5.0m	35	400uV	175J	DO35
190	HZ6C1L	3	5.95	400m	500u	60		175J	DO35
191	HZ6HC1	3	5.95	500m	5.0m	35	400uV	175J	DO35
192	RD6.2FB1		5.95	1.0	40m	6.0		175J	A277r
193	RD5.6FC	5	5.95	1.0	40m	8.0		175J	A297c
194	1N2042B	5	6.0		1.0	.70		150A	S19a
195	CD5340B	5	6.0		200m	1.0	3.6	200J	u39b
196	MMBZ5233	5	6.0		20m	7.0			M500
197▼	TMPZ5233	5.0	6.0		20m	7.0			TO236Ø
198	RD6.2MB1	3	6.0	200m	5.0m	50		150	
199	SZ6	10	6.0	.25	20m	20	.50	150J	C1f
200	C5D5233	10	6.0	320m	20m			150S	M713a
201	HZS6.2JB1	2.4	6.00	400m	5.0m	20		200J	A380d
202	RD6.2JSB1(A)								
		2.5	6.00	400m	5.0m	60	3.3	175J	DO34
203	CD5233B	5	6.0	400m	20m	7.0	3.8	200J	u39a
204	CH5233	5	6.0	400m	20m	7.0	3.8	200J	u10
205	MZL306	5	6.0	400m	500u	60	3.2	175J	DO35
206	1N5233B	5	6.0	500m	20m	6.0	3.8	200A	A398a
207	1N5849B	5	6.0	500m	20m	13		150C	M859

SYMBOLS AND CODES EXPLAINED IN INTERPRETER

2. VOLTAGE REFERENCE DIODES - $V_Z \geq 4.7$ V (Cont'd)

IN ORDER OF: (1) REF. VOLTAGE (2) PD MAX (3) TOLERANCE & (4) TYPE NUMBER

LINE No.	4 TYPE No.	3 TOL ± (%)	1 NOM. REF. VOLT. (V)	2 PD @ 25°C MAX (W)	TEST CUR. Izt (A)	DYN. IMP. MAX (Ω)	TEMP. COEFF Tc MAX	TEMP MAX (°C)	DWG. NO.
1	MZ306,A,B,C								
		5	6.0	500m	10m	30	3.0	175J	DO35
2	RD5.6EC	5	6.0	500m	20m	25	2.8	175J	DO35
3	RD6.2EC	5	6.0	500m	20m	20	3.8	175J	DO35
4	TS0600	5.0	6.0	500m	1.0u				DO35
5	TS06000	5	6.0	500m	1.0u			200J	DO35
6	ZMM5233B	5.0	6.0	500m§	20m	7.0	3.8	200J	F139
7	EQA02-06CD	8	6.0	500m	20m	20	.03	175J	A1ac
8	1N5233A	10	6.0	500m	20m	6.0	3.8	200A	A398a
9	1N5849A	10	6.0	500m	20m	13		150C	M859
10	MLL5233A	10	6.0	500m§	20m	7.0	3.8	200J	F140
11	ZMM5233A	10	6.0	500m§	20m	7.0	3.8	200J	F139
12	EQA01-06S	11	6.0	500m	15m	8.0	.03	125J	A387
13	1N5233	20†	6.0	.50	20m			200A	A398a
14	MLL5233	20	6.0	500m§	20m	7.0		200J	F140
15	ZMM5233	20	6.0	500m§	20m	7.0	3.8	200J	F139
16	EQA01-06	21	6.0	500m	15m	8.0	.03	125J	A387
17	AP6.0A,B		6.0	1.0 †	20m	35			DO35
18	MZ406,A,B,C								
		5	6.0	1.0	20	8.0	3.0	175J	DO41
19	1S2128	10	6.0	1.0	40m	8.0		150J	A41b
20	VR6,A,B	10†	6.0	1.0	25m	4.1	2.0	125C	A1ex
21	AW01-06	13	6.0	1.0	60m	9.0	2.5	150J	A333
22	EQB01-06	21	6.0	1.0	30m	5.0	.03	140J	A21b
23	SZL6	10	6.0	1.3	100m	2.0		150J	A115
24	2VR6,A,B	10†	6.0	2.0	250u	4.0			A3e
25	3VR6,A,B	10†	6.0	3.0	250m	1.0			A3al
26	RD6AN		6.1	250m	10m	30		175J	A277b
27	RD6BN		6.1	1.0	40m	8.0		150J	A427
28	BZ061	5	6.1	1.0	30m	6.0	3.1	175J	DO41
29	RD6CN		6.1	3.0	120m	6.0		150J	S547
30	RD6.2EB2		6.11	500m	20m	10		175J	A277b
31	RD6.2EL		6.11	500m	1.0m	10		175J	A277b
32	RD6.2EL2		6.11	500m	1.0m	10		175J	A277b
33	RD6.2EN		6.11	500m	5.0m	10		175J	A277b
34	RD6.2EN2		6.11	500m	5.0m	10		175J	A277b
35	HZ6.2EB2	2.5	6.12	500m	20m	10		175J	DO35
36	3KZ6.8	10†	6.12	3.0 §	175m		.05		A3ak§
37	HZ6C2	2	6.15	400m	5.0m	35	400uV	175J	DO35
38	HZ6C2L	2	6.15	400m	500u	60	1.0	175J	DO35
39	HZ6HC2	2	6.15	500m	5.0m	35	400uV	175	DO358
40	RD6.2FB2		6.15	1.0	40m	6.0		175J	A277r
41	HZS6.2JB2	2.4	6.19	400m	5.0m	20		200J	A380d
42	RD6.2JSB2(A)								
		2.5	6.19	400m	5.0m	60	3.3	175J	DO34

$V_Z \geq 6.2$ V

LINE No.	4 TYPE No.	3 TOL ± (%)	1 NOM. REF. VOLT. (V)	2 PD @ 25°C MAX (W)	TEST CUR. Izt (A)	DYN. IMP. MAX (Ω)	TEMP. COEFF Tc MAX	TEMP MAX (°C)	DWG. NO.
46	THZ821		6.2		7.5m	15	100 p	100	u45a
47	THZ823		6.2		7.5m	15	50 p	100	u45a
48	THZ825		6.2		7.5m	15	20 p	100	u45a
49	THZ827		6.2		7.5m	15	10 p	100	u45a
50	THZ829		6.2		7.5m	15	5.0 p	100	u45a
51	TZPD6.2		6.2		5.0m	10	3.0		DO35
52	TZPY6.2		6.2		100m	2.0	3.0		DO41
53	CD610	2	6.2		7.5m	10	2.5m	75J	DO7
54	BZV49C6V2	5	6.2		5.0m	10		150J	M1008
55	CD4735A	5.0	6.2		41m	2.0		200	u52
56	CD5341B	5	6.2		200m	4.3	3.6	200J	u39b
57	CH821	5	6.2		7.5m	15	1.0	200J	u10
58	CH823	5	6.2		7.5m	15	500m	200J	u10
59	CH825	5	6.2		7.5m	15	200m	200J	u10
60	CH827	5	6.2		7.5m	15	100m	200J	u10
61	CH829	5	6.2		7.5m	15	50m	200J	u10
62	CRD821	5	6.2		7.5m	15	1.0	175A	F133h
63	CRD823	5	6.2		7.5m	15	500m	175A	F133h
64	CRD825	5	6.2		7.5m	15	200m	175A	F133h
65	CRD827	5	6.2		7.5m	15	100m	175A	F133h
66	CRD829	5	6.2		7.5m	15	50m	175A	F133h
67	CRD921	5	6.2		2.0m	50	1.0	175A	F133h
68	CRD923	5	6.2		2.0m	50	500m	175A	F133h
69	CRD925	5	6.2		2.0m	50	200m	175A	F133h
70	CRD927	5	6.2		2.0m	50	100m	175A	F133h
71	CRD929	5	6.2		2.0m	50	50m	175A	F133h
72	MMBZ5234	5	6.2		20m	7.0			M500
73	MZ605	5	6.2		7.5m	10		100A	DO7
74	MZ610	5	6.2		7.5m	10		100A	DO7
75	MZ620	5	6.2		7.5m	10		100A	DO7
76	MZ640	5	6.2		7.5m	10		100A	DO7
77	NC6V2	5	6.2		5.0m	10	4.0		u48
78▼	TMPZ5234	5.0	6.2		20m	7.0			TO236Ø
79	TSC6086CHIP								
		5	6.2		1.0m				u46
80	BZ6.2	5	6.2	.15	5.0m	20		170A	DO7
81	MA3062	5.0	6.2	150m	5.0m	20	0.4	125J	M713b
82	MRD821	5	6.2	150m	7.5m	15	1.0	125A	M698
83	MRD823	5	6.2	150m	7.5m	15	500m	125A	M698
84	MRD825	5	6.2	150m	7.5m	15	200m	125A	M698
85	MRD827	5	6.2	150m	7.5m	15	100m	125A	M698
86	MRD829	5	6.2	150m	7.5m	15	50m	125A	M698
87	MRD921	5	6.2	150m	2.0m	50	1.0	125A	M698
88	MRD923	5	6.2	150m	2.0m	50	500m	125A	M698
89	MRD925	5	6.2	150m	2.0m	50	200m	125A	M698
90	MRD927	5	6.2	150m	2.0m	50	100m	125A	M698
91	MRD929	5	6.2	150m	2.0m	50	50m	125A	M698
92	RD6.2MB		6.2	200m	5.0m	50		150J	M500c
93	RD6.2MB2	3	6.2	200m	5.0m	50		150	
94	1N429	5	6.2	.20	7.5m	20	1.0	150A	C1
95	1N1735	5	6.2	.20	7.5m	20	80	150C	A69v
96	02Z6.2A	5	6.2	200m	10m	20	4.2	175J	DO35
97	BZX84C6V2	5	6.2	200m	5.0m	10	4.0	150J	M500d
98	ESZ6.2	5	6.2	20Cm	10m	8.0 †			TO106
99	PTC503	10	6.2	248m†	40m	3.0			A1bc
100	1N709A	5	6.2	250m	25m	4.1	3.2	175A	DO7
101	1N821	5	6.2	.25	7.5m	15	1	125A	DO7
102	1N823	5	6.2	.25	7.5m	15	.5	125A	DO7
103	1N825	5	6.2	.25	7.5m	15	.2	125A	DO7
104	1N827	5	6.2	.25	7.5m	15	.1	125A	DO7
105	1N829	5	6.2	.25	7.5m	15	.05	150S	DO7
106	1N829A	5	6.2	.25	7.5m	10	.05	150S	DO7
107	1N3496	5	6.2	.25	7.5m	15	.05	150S	DO7
108	1N3497	5	6.2	.25	7.5m	15	.20	150S	DO7
109	1N3498	5	6.2	.25	7.5m	15	.10	150S	DO7
110	1N3499	5	6.2	.25	7.5m	15	.05	150S	DO7
111	1N3500	5	6.2	.25	7.5m	15	1.0	150S	DO7
112	1N4627	5	6.2	.25	.25m	1.2k		200	DO14
113	1N4691	5	6.2	.25	.05m			200A	DO14
114	1SZ50	5	6.2	250m	7.5m	15	1.0	175	A277b
115	1SZ51	5	6.2	250m	7.5m	15	.50	175	A277b
116	1SZ52	5	6.2	250m	7.5m	15	.20	175	A277b
117	1SZ53	5	6.2	250m	7.5m	15	.10	175	A277b
118	BZY83C6V2	5	6.2	.25	5.0m	40	6	150J	C1g
119	CLVA62A	5	6.2	250m	1.0m	15 †		175	u20j
120	K621A	5	6.2	250m§	250u	35	2.0mV	175A	DO7
121	PD6009,A	5†	6.2	.25	5.0m	50		150	A109
122	PD6050	5	6.2	.25	10m	5.0		150	A2c
123	PD6205	5	6.2	250m	1.0m	50		175A	A109
124	1/4M6.2AZ10								
		10†	6.2	250m	10m	15		175J	E204h
125	1N709	10	6.2	250m	25m	4.1	3.2	175A	DO7
126	K621	10	6.2	250m§	250u	35	2.0mV	175A	DO7
127	1N709B	20	6.2	.25	25m	4.1			DO7
128	BZ821T	5	6.2	300m	7.5m	15	1.0	175J	M765
129	BZ821TF	5	6.2	300m	7.5m	15	1.0	175J	TO86
130	BZ821TT	5	6.2	300m	7.5m	15	1.0	175J	TO18
131	MC6008,A	5†	6.2	.30	10m	10		175	A2m
132	C5D5234	10	6.2	320m	20m			150S	M713a
133	BZX88C6V2	5	6.2	350m	5.0m	10	4.0	175J	A412
134	MA4062	5	6.2	370m	5.0m	20	0.4	200J	DO34
135	BZV27		6.2	400m	7.5m	15			DO35
136	BZV27A		6.2	400m	7.5m	15			DO35
137	BZV28		6.2	400m	7.5m	15			DO35
138	BZV28A		6.2	400m	7.5m	15			DO35
139	BZV29		6.2	400m	7.5m	15			DO35
140	BZV29A		6.2	400m	7.5m	15			DO35
141	BZV30		6.2	400m	7.5m	15			DO35
142	BZV30A		6.2	400m	7.5m	15			DO35
143	BZV31		6.2	400m	7.5m	15			DO35
144	BZV31A		6.2	400m	7.5m	15			DO35
145	MTZ6.2		6.2	400m	20m	20		175J	DO34
146	TZ6.2		6.2	400m	20m	20		175J	DO35
147	1N5525D	1	6.2	400m§	1.0m	30		175A	DO7
148	1N5731D	1	6.2	400m§	10m	10	3.7	200A	DO35
149	1N6086D	1	6.2	400m§	10u	45	5.0	175L	DO7
150	KZ62C	1	6.2	400m§	1.0m	50		175J	DO7
151	KZ462C	1	6.2	400m§	250u	100	4.3	175A	DO7
152	LVA62C	1	6.2	400m	1.0m	50		175A	DO7
153	LVA162C	1	6.2	400m	250u	200	4.3	150A	DO14
154	LVA462C	1	6.2	400m	250u	100	4.3	150A	DO7
155	Z5A6.2	1†	6.2	400m§	5.0m	25	7.0	200J	DO7
156	1N5525C	2	6.2	400m§	1.0m	30		175A	DO7
157	1N5731C	2	6.2	400m§	10m	10	3.7	200A	DO35
158	1N6086C	2	6.2	400m§	10u	45	5.0	175L	DO7
159	BZX79B6V2	2	6.2	400m§	5.0m	10	4.0mV	200J	DO35
160	KZ62B	2	6.2	400m§	1.0m	50		175A	DO7
161	KZ462B	2	6.2	400m§	250u	100	4.3	175A	DO7
162	LVA62B	2	6.2	400m	1.0m	50		175A	DO7
163	LVA162B	2	6.2	400m	250u	200	4.3	150A	DO14
164	LVA462B	2	6.2	400m	250u	100	4.3	150A	DO7
165	KZ462A	3	6.2	400m§	250u	100	4.3	175A	DO7
166	LVA162A	3	6.2	400m	250u	200	4.3	150A	DO14
167	LVA462A	3	6.2	400m	250u	100	4.3	150A	DO7
168	T-LVA462A	4†	6.2	400m	250u	100	2.6mV	175J	DO35
169	1N675	5	6.2	.40	20m	3.0	3.0	200S	A31b
170	1N753A	5	6.2	400m	20m	7.0	2.2	175A	A1
171	1N821A	5	6.2	.40	7.5m	10	1.0	175	DO7
172	1N823A	5	6.2	.40	7.5m	10	.50	175	DO7
173	1N825A	5	6.2	.40	7.5m	10	.20	175	DO7
174	1N827A	5	6.2	.40	7.5m	10	.10	175	DO7
175	1N3513	5	6.2	.40	20m	3.0	2.2	200A	DO7
176	1N4010	5	6.2	.40	7.5m	15	1.0	100	A1cw
177	1N5525B	5	6.2	400m§	1.0m	30		175A	DO7
178	1N5731	5	6.2	400m	10m	10 †	2.0mV	200	DO35
179	1N5731B	5	6.2	400m§	10m	10	3.7	200A	DO35
180	1N6086B	5	6.2	400m§	10u	45	5.0	175L	DO7
181	1S2062A	5	6.2	.40	5.0m	40	3.0	150A	A1
182	1S7062,B	5†	6.2	.40	5.0m	75	3.0	150A	A1
183	1S7062A	5	6.2	.40	5.0m	40	3.0	150A	A1
184	BZX79C6V2	5	6.2	400m§	5.0m	10	2.3mV	200J	DO35
185	BZX96C6V2	5	6.2	400m	5.0m	10	3.2	150J	DO7
186	CD753A	5	6.2	400m	20m	7.0	4.9	200J	u39a
187	CD821	5	6.2	400m	7.5m	15	1.0	200J	u37b
188	CD821A	5	6.2	400m	7.5m	10	1.0	200J	u37b
189	CD823	5	6.2	400m	7.5m	15	500m	200J	u37b
190	CD823A	5	6.2	400m	7.5m	10	500m	200J	u37b
191	CD825	5	6.2	400m	7.5m	15	200m	200J	u37b
192	CD825A	5	6.2	400m	7.5m	10	200m	200J	u37b
193	CD827	5	6.2	400m	7.5m	15	100m	200J	u37b
194	CD827A	5	6.2	400m	7.5m	10	100m	200J	u37b
195	CD829	5	6.2	400m	7.5m	15	50m	200J	u37b
196	CD829A	5	6.2	400m	7.5m	10	50m	200J	u37b
197	CD4627	5	6.2	400m	250u	1.2k	5.0	200J	u39a
198	CD5234B	5	6.2	400m	20m	7.0	4.5	200J	u39a
199	CD5235B	5	6.2	400m	20m	5.0	5.0	200J	u39a
200	CH753	5	6.2	400m	20m	3.0	4.5	200J	u10
201	CH4627	5	6.2	400m	250u	1.2k	5.0	200J	u10
202	CH5234	5	6.2	400m	20m	7.0	4.5	200J	u10
203	KZ62A	5	6.2	400m§	1.0m	50		175A	DO7
204	KZ362A	5†	6.2	400m	1.0m	45		175A	DO7
205	KZ462	5†	6.2	400m		100	2.6	175A	DO7
206	LVA62A	5	6.2	400m	1.0m	50		175A	DO7
207	MA1062	5	6.2	400m	5.0m	10	400m	200J	A24d
208	RD6.2JB	5	6.2	400m	5.0m	60		175J	DO35
209	RD6.2JSB(A)								
		5.0	6.2	400m	5.0m	60	3.3	175J	DO34
210	T-LVA62A	5†	6.2	400m	1.0m	50		175J	DO35
211	T-LVA362A	5†	6.2	400m	1.0m	45		175J	DO35
212	Z5B6.2	5†	6.2	400m§	5.0m	25	7.0	200J	DO7
213	ZMM753A	5.0	6.2	400m§	20m	7.0	2.2	175J	F139
214	ZR821-10	5	6.2	400m§	1.0m	90	1.0	175A	DO7

SYMBOLS AND CODES EXPLAINED IN INTERPRETER

2. VOLTAGE REFERENCE DIODES - $V_Z \geq 6.2$ V (Cont'd)

IN ORDER OF: (1) REF. VOLTAGE (2) PD MAX (3) TOLERANCE & (4) TYPE NUMBER

LINE No.	4 TYPE No.	3 TOL ± (%)	1 NOM. REF. VOLT. (V)	2 PD @ 25°C MAX (W)	TEST CUR. Izt (A)	DYN. IMP. MAX (Ω)	TEMP. COEFF Tc MAX	TEMP MAX (°C)	DWG. NO.
1	ZR821-20	5	6.2	400m§	2.0m	50	1.0	175A	DO7
2	ZR821-50	5	6.2	400m§	5.0m	20	1.0	175A	DO7
3	ZR821-75	5	6.2	400m§	7.5m	15	1.0	175A	DO7
4	ZR821-100	5	6.2	400m§	10m	10	1.0	175A	DO7
5	ZR821-120	5	6.2	400m§	12m	8.0	1.0	175A	DO7
6	ZR821-150	5	6.2	400m§	15m	6.0	1.0	175A	DO7
7	ZR823-10	5	6.2	400m§	1.0m	90	500m	175A	DO7
8	ZR823-20	5	6.2	400m§	2.0m	50	500m	175A	DO7
9	ZR823-50	5	6.2	400m§	5.0m	30	500m	175A	DO7
10	ZR823-75	5	6.2	400m§	7.5m	15	500m	175A	DO7
11	ZR823-100	5	6.2	400m§	10m	10	500m	175A	DO7
12	ZR823-120	5	6.2	400m§	12m	8.0	500m	175A	DO7
13	ZR823-150	5	6.2	400m§	15m	6.0	500m	175A	DO7
14	ZR825-20	5	6.2	400m§	2.0m	50	200m	175A	DO7
15	ZR825-50	5	6.2	400m§	5.0m	20	200m	175A	DO7
16	ZR825-75	5	6.2	400m§	7.5m	15	200m	175A	DO7
17	ZR825-100	5	6.2	400m§	10m	10	200m	175A	DO7
18	ZR825-120	5	6.2	400m§	12m	8.0	200m	175A	DO7
19	ZR825-150	5	6.2	400m§	15m	6.0	200m	175A	DO7
20	ZR827-20	5	6.2	400m§	2.0m	50	100m	175A	DO7
21	ZR827-50	5	6.2	400m§	4.0m	20	100m	175A	DO7
22	ZR827-75	5	6.2	400m§	7.5m	15	100m	175A	DO7
23	ZR827-100	5	6.2	400m§	10m	10	100m	175A	DO7
24	ZR827-120	5	6.2	400m§	12m	8.0	100m	175A	DO7
25	ZR827-150	5	6.2	400m§	15m	6.0	100m	175A	DO7
26	ZR829-50	5	6.2	400m§	5.0m	20	50m	175A	DO7
27	ZR829-75	5	6.2	400m§	7.5m	15	50m	175A	DO7
28	ZR829-100	5	6.2	400m§	10m	10	50m	175A	DO7
29	ZR829-120	5	6.2	400m§	12m	8.0	50m	175A	DO7
30	ZS6	5†	6.2	400m	7.5m	15	500m	150A	C3h
31	ZS61	5	6.2	400m§	15m	12	1.0	175A	DO7
32	ZS605	5	6.2	400m§	15m	12	500m	175A	DO7
33	ZS6010	5	6.2	400m§	7.5m	15	100m	175A	DO7
34	ZS6011	5	6.2	400m§	12m	12	100m	175A	DO7
35	ZS6020	5	6.2	400m§	7.5m	15	200m	175A	DO7
36	ZS6021	5	6.2	400m§	15m	12	200m	175A	DO7
37	LVA162	8	6.2	400m	250u	200	4.3	150A	DO14
38	LVA462	8	6.2	400m	250u	100	4.3	150A	DO14
39	1N753	10	6.2	400m	20m	7.0	2.2	175A	A1
40	1N5525A	10	6.2	400m§	1.0m			175A	DO7
41	1N6086A	10	6.2	400m§	10u	45	5.0	175L	DO7
42	1S2062	10	6.2	.40	5.0m	75	3.0	150A	A1
43	GSZ6.2	10	6.2	400m	20m	12			A69a
44	GSZ6.2A	10	6.2	400m	20m	12			A69a
45	ZMM753	10	6.2	400m§	20m	7.0	2.2	175J	F139
46	1N5525	20	6.2	400m§	1.0m			175A	DO7
47	1N6086	20	6.2	400m§	10u	45	5.0	175L	DO7
48	GZA6.2		6.2	500m		5.0 †	6.0		A159
49	1N5995D	1	6.2	500m	5.0m	10		200J	DO35
50	Z0A6.2	1†	6.2	500m	5.0m	8.0 †	7.0	200J	DO29
51	1N5995C	2	6.2	500m	5.0m	10		200J	DO35
52	1N5234B	5	6.2	500m	20m	3.0	4.5	200A	A398a
53	1N5850B	5	6.2	500m	20m	14		150C	M859
54	1N5995B	5	6.2	500m	5.0m	10		200J	DO35
55	BZX46C6V2	5	6.2	500m	20m	7.0	7.0	175A	DO35
56	BZX55C6V2	5	6.2	500m	5.0m	10	4.0	175A	DO35
57	BZX83C6V2	5	6.2	500m	5.0m	10	4.0	175A	DO35
58▼	CD62#B	5	6.2	500m	1.0m	40		200J	DO7
59	CTZ6.2A	5	6.2	500m	20m	30	250	200	DO35
60	MA5062	5	6.2	500m	5.0m	20	0.4	125J	M990
61	MLL5234B	5.0	6.2	500m§	20m	7.0	4.5	200J	F140
62	MTZ608,A	5†	6.2	.50	10m	10		175A	A60e
63	PS1325	5	6.2	.5 §	1.0m	500	.50	175S	A9b
64	PS8908	5	6.2	.50	20m	3.0	3.5	150	A60p
65	RD6.2EB	5	6.2	500m	20m	20	3.4	175J	DO35
66▼	SZ.5-6.2-5-25								
		5.0	6.2	500m	25m			175	u5a
67	TS06200	5	6.2	500m	1.0u			200J	DO35
68	Z0B6.2	5†	6.2	500m	5.0m	8.0 †	7.0	200J	DO29
69	ZMM5234B	5.0	6.2	500m§	20m	7.0	4.5	200J	F139
70	ZPD6V2	5†	6.2	500m	5.0m	200	1.9mV	175J	DO35
71	ZPD6.2	5	6.2	500m	5.0m	10	3.0	175J	DO35
72	05Z6.2	6.0	6.2	500m	5.0m	15	4.2	175J	DO35
73	BZX97C6V2	6	6.2	500m	5.0m	10	4.0	175J	DO35
74	ZMM6.2	6†	6.2	500m	5.0m	10	3.0	175J	F135
75	BZV55C6V2	6.8	6.2	500m	5.0m	10	2.3	200J	F139
76	BZV60C6V2	6.8	6.2	500m	5.0m	10	2.3	200J	DO34
77	1N3411	10	6.2	.50	1.0m	400	1.9	200A	P5
78	1N5234A	10	6.2	500m	20m	3.0	4.5	200A	A398a
79	1N5850A	10	6.2	500m	20m	14		150C	M859
80	1N5995A	10	6.2	500m	5.0m	50		200J	DO35
81	CTZ6.2	10	6.2	500m	20m	30	250	200	DO35
82	MLL5234A	10	6.2	500m§	20m	7.0	4.5	200J	F140
83▼	SZ.5-6.2-10-25								
		10	6.2	500m	25m			175	u5a
84	ZMM5234A	10	6.2	500m§	20m	7.0	4.5	200J	F139
85	1N5234	20†	6.2	.50	20m			200A	A398a
86	1N5995	20	6.2	500m	5.0m	50		200J	DO35
87	MLL5234	20	6.2	500m§	20m	7.0		200J	F140
88▼	SZ.5-6.2-20-25								
		20	6.2	500m	25m			175	u5a
89	ZMM5234	20	6.2	500m§	20m	7.0	4.5	200J	F139
90	LVA362C	1	6.2	600m	1.0m	45		175A	DO14
91	LNA362B	2	6.2	600m	1.0m	40		175A	DO7
92	LVA362B	2	6.2	600m	1.0m	45		175A	DO14
93	GLA62,A,B	5†	6.2	600m	1.0m	40	4.5	175	DO7
94	LNA362A	5	6.2	600m	1.0m	40		175A	DO7
95	LVA362A	5	6.2	600m	1.0m	45		175A	DO14
96	LNA362	10	6.2	600m	1.0m	40		175A	DO7
97	MLNA362B	2	6.2	750m	1.0m	40		175A	A249e
98	BZV41C6V2	5	6.2	750m	5.0m	10	4.0	175S	A412
99	MC6108,A	5†	6.2	.75	25m	10		175	A2d
100	MGLA62,A,B	5†	6.2	750m	1.0m	40	4.5	175A	A249e
101	MLNA362A	5	6.2	750m	1.0m	40		175A	A249e
102	MLV753A	5	6.2	750m	20m	3.0		175A	A2j
103	TSZ6.2	5	6.2	750m	10m	12			TO39
104	MLNA362	10	6.2	750m	1.0m	40		175A	A249e
105	HZ6.2PB		6.2	800m	40m	6.0		175J	DO41
106	AP6.2A,B		6.2	1.0 †	20m	10			DO35
107	DZB6.2		6.2	1.0	10m	60	1.5mV	150J	A298ap
108	GZB6.2		6.2	1.0	10m	60	1.5mV	150J	A298ap
109	MA2062		6.2	1.0	40m	6.0	2.4	200J	A277r
110	TSC4735CHIP								
			6.2	1.0	41m	2.0			u46
111	LVA1062C	1	6.2	1.0	1.0m	50		175	A266c
112	Z4A6.2	1†	6.2	1.0	50m	2.0	3.0	200J	DO29
113	LVA1062B	2	6.2	1.0	1.0m	50		175	A266c
114	SZ6.2	2†	6.2	1.0	20m	2.0 †	1.8	150A	A3g
115	1N1485	5	6.2	1.0	20m	3.0			A154
116	1N1766A	5	6.2	1.0	100m	1.5		175A	DO13Ø
117	1N3828A	5	6.2	1.0	41m	2.0	3.5	175A	A31a
118	1N4499	5	6.2	1.0	7.5m	20		275A	DO7
119	1N4656	5	6.2	1.0	41m	600	4.5	200A	DO15
120	1N4735A	5	6.2	1.0	41m	2.0		200A	DO41
121	APD6.2A,B	5†	6.2	1.0 †	41m	10			A1rx
122	BZV85C6V2	5	6.2	1.0	35m	4.0	2.1mV	200J	DO41
123	BZX78C6V2	5	6.2	1.0	50m	3.0	2.4mV	200J	
124	BZX85C6V2	5	6.2	1.0 §	35m	4.0	5.5	150A	DO41
125	CD4735	5	6.2	1.0	41m	2.0	4.9	200J	u39a
126	CH4735	5	6.2	1.0	41m	2.0	4.9	200J	u10
127	LVA1062A	5	6.2	1.0	1.0m	50		175	A266c
128	PL6V2Z	5	6.2	1.0	100m	2.0	4.0	150J	
129	PR236-RT	5	6.2	1.0	4.1m	2.0 †			DO7
130	RD6.2P	5.0	6.2	1.0	5.0m	10	3.0	150J	M1008
131▼	SZ1-6.2-5-25								
		5.0	6.2	1.0	25m			175	u5b
132	VR6.2,A,B	5	6.2	1.0	41m	2.0		125A	A1b
133	Z4B6.2	5†	6.2	1.0	50m	2.0	3.0	200J	DO29
134	Z6.2	5†	6.2	1.0	20m	1.1 †	4.0	150A	DO41
135	ZB6.2B	5	6.2	1.0	41m	3.0		100C	A1bc
136	ZM4735A	5.0	6.2	1.0 §	41m	2.0		200J	F139
137	RD6.2FB	6	6.2	1.0	40m	6.0		175J	A297c
138	1N1766	10	6.2	1.0	100m	1.5		175A	DO13Ø
139	1N3828	10	6.2	1.0	41m	2.0	3.5	175A	A31a
140	1N4735	10	6.2	1.0	41m	2.0		200A	DO41
141	1Z6.2	10	6.2	1.0	10m	60	2.4	150J	DO15
142▼	SZ1-6.2-10-25								
		10	6.2	1.0	25m			175	u5b
143	ZB6.2A	10	6.2	1.0	41m	3.0		100C	A1ty
144	ZM4735	10	6.2	1.0 §	41m	2.0		200J	F139
145▼	SZ1-6.2-20-25								
		20	6.2	1.0	25m			175	u5b
146	ZB6.2	20	6.2	1.0	41m	3.0		100C	A1ty
147	BZX87C6V2	5	6.2	1.3	50m	3.0	3.8	200J	A60al
148	BZY97C6V2	5	6.2	1.3	100m	2.0	6.0		A1rx
149	ZD6.2	5	6.2	1.3	100	2.0	3.0	150J	DO13
150	ZY6.2	5	6.2	1.3	100m	2.0	6.0	150J	A1bg
151	BZD10C6V2	6	6.2	1.3	100m	2.0	6.0		DO13
152	BZW22C6V2	6	6.2	1.3	100m	2.0	6.0		DO41
153	ZMY6.2	7	6.2	1.3	100m	2.0	3.5	200J	F149
154	ZPY6.2	12	6.2	1.3	100m	2.0	6.0	200J	DO41
155	1N5920D	1	6.2	1.5	60m	2.0		200J	DO41
156	1N5920C	2	6.2	1.5	60m	2.0		200J	DO41
157	1N4460	5	6.2	1.5	40m	4.0		175A	A60y
158	1N5920B	5	6.2	1.5	60m	2.0		200J	DO41
159	BZY96C6V2	5	6.2	1.5	100m	3.0	3.2	175J	DO1
160	MC6308,A	5†	6.2	1.5	100m	8.0			A1q
161	1N5920A	10	6.2	1.5	60m	2.0		200J	DO41
162	1N5920	20	6.2	1.5	60m	2.0		200J	DO41
163	2EZ6.2D5	5	6.2	2.0	80m	1.5		200J	A1ay
164	2VR6.2,A,B	5†	6.2	2.0	81m	2.0			A3e
165	BZV47C6V2	5	6.2	2.0	100m	2.0	3.2	175J	A344r
166	LMZ6.2A	5	6.2	2.0	80m	4.5	5.0	150A	DO41
167	ZBC6.2B	5	6.2	2.0	82m	2.0			A1ty
168	2EZ6.2D10	10	6.2	2.0	80m	1.5		200J	A1ay
169	LMZ6.2	10	6.2	2.0	80m	4.5	5.0	150A	DO41
170	ZBC6.2A	10	6.2	2.0	82m	2.0			A1ty
171	2EZ6.2D	20	6.2	2.0	80m	1.5		200J	A1ay
172	ZBC6.2	20	6.2	2.0	82m	2.0			A1ty
173	1N5015A	5	6.2	2.5	101m	3.0	4.9	150	A1gn
174	Z2B6.2	5†	6.2	2.5	50m	2.0	3.0	200J	DO1
175	1N5015	10	6.2	2.5	101m	3.0	4.9	150	A1gn
176	3EZ6.2D1	1.0	6.2	3.0	121m	1.5		150J	A1ay
177	3EZ6.2D2	2.0	6.2	3.0	121m	1.5		150J	A1ay
178	3EZ6.2D3	3.0	6.2	3.0	121m	1.5		150J	A1ay
179	3EZ6.2D4	4.0	6.2	3.0	121m	1.5		150J	A1ay
180	3EZ6.2D5	5	6.2	3.0	121m	1.5		200J	A1ay
181	3VR6.2,A,B	5†	6.2	3.0	.25	1.0			A3al
182	BZV16C6V2	5	6.2	3.0	81m	2.0	3.2	175J	DO13
183	ZCC6.2B	5	6.2	3.0	121m	1.5			A1ey
184	3EZ6.2D10	10	6.2	3.0	121m	1.5		200J	A1ay
185	ZCC6.2A	10	6.2	3.0	121m	1.5			A1ey
186	3EZ6.2D	20	6.2	3.0	121m	1.5		200J	A1ay
187	ZCC6.2	20	6.2	3.0	121m	1.5			A1ey
188	3T6.2,A,B	5†	6.2	3.5	100m	1.5			DO4
189▼	SZ3-6.2-5-25								
		5.0	6.2	5.0	25m			175	u5c
190▼	SZ3-6.2-10-25								
		10	6.2	5.0	25m			175	u5c
191▼	SZ3-6.2-20-25								
		20	6.2	5.0	25m			175	u5c
192	HZ6C3	2	6.25	400m	5.0m	35	400uV	175J	DO35
193	HZ6C3L	2	6.25	400m	500u	60	1.2	175J	DO35
194	HZ6HC3	2	6.25	500m	5.0m	35	400uV	175	DO35
195	MC6400A	5†	6.28	.25	7.5m	15	1.0	75R	F133e
196	MC6400B	5†	6.28	.25	7.5m	15	1.0	75R	A188
197	MC6401A	5†	6.28	.25	7.5m	15	1.0	100R	F133e
198	MC6401B	5†	6.28	.25	7.5m	15	1.0	100R	A188
199	MC6402A	5†	6.28	.25	7.5m	15	.50	75R	F133e
200	MC6402B	5†	6.28	.25	7.5m	15	.50	75R	A188
201	MC6403A	5†	6.28	.25	7.5m	15	.50	100R	F133e
202	MC6403B	5†	6.28	.25	7.5m	15	.50	100R	A188
203	MC6404A	5†	6.28	.25	7.5m	15	.20	75R	F133e
204	MC6404B	5†	6.28	.25	7.5m	15	.20	75R	A188
205	MC6405A	5†	6.28	.25	7.5m	15	.20	100R	F133e
206	MC6405B	5†	6.28	.25	7.5m	15	.20	100R	A188
207	MC6406A	5†	6.28	.25	7.5m	15	.10	75R	F133e
208	MC6406B	5†	6.28	.25	7.5m	15	.10	75R	A188
209	MC6407A	5†	6.28	.25	7.5m	15	.10	100R	F133e
210	MC6407B	5†	6.28	.25	7.5m	15	.10	100R	A188

2. VOLTAGE REFERENCE DIODES - $V_Z \geq 6.2$ V (Cont'd)

IN ORDER OF: (1) REF. VOLTAGE (2) PD MAX (3) TOLERANCE & (4) TYPE NUMBER

LINE No.	4 TYPE No.	3 TOL ± (%)	1 NOM. REF. VOLT. (V)	2 PD @ 25°C MAX (W)	TEST CUR. Izt (A)	DYN. IMP. MAX (Ω)	TEMP. COEFF Tc MAX	TEMP MAX (°C)	DWG. NO.
1	MC6424A	5†	6.28	.25	7.5m	15	.05	75R	F133e
2	MC6424B	5†	6.28	.25	7.5m	15	.10	75R	A188
3	MC6425A	5†	6.28	.25	7.5m	15	.05	100R	F133e
4	MC6425B	5†	6.28	.25	7.5m	15	.10	100R	A188
5	MC6400C	5†	6.28	.40	7.5m	15	1.0	75R	A1as
6	MC6401C	5†	6.28	.40	7.5m	15	1.0	100R	A1as
7	MC6402C	5†	6.28	.40	7.5m	15	.50	75R	A1as
8	MC6403C	5†	6.28	.40	7.5m	15	.50	100R	A1as
9	MC6404C	5†	6.28	.40	7.5m	15	.20	75R	A1as
10	MC6405C	5†	6.28	.40	7.5m	15	.20	100R	A1as
11	MC6406C	5†	6.28	.40	7.5m	15	.10	75R	A1as
12	MC6407C	5†	6.28	.40	7.5m	15	.10	100R	A1as
13	MC6424C	5†	6.28	400m	7.5m	15	50m	75R	A1as
14	MC6425C	5†	6.28	400m	7.5m	15	50m	100R	A1as
15	RD6.2EB3		6.28	500m	20m	10		175J	A277b
16	RD6.2EN3		6.28	500m	5.0m	10		175J	A277b
17	HZ6.2EB3	2.6	6.28	500m	20m	10		175J	DO35
18	1N3553	3.2	6.3	.25	7.5m	15	1.0	200S	DO7
19	EQA01-06T	11	6.3	500m	15m	8.0	.03	125J	A387
20	BZ063	5	6.3	1.0	30m	6.0	3.4	175J	DO41
21	RD6.2FB3		6.34	1.0	40m	6.0		175J	A277r
22	1N3503A	2	6.35		7.5m	12	.05	125	DO7
23	1N3504A	2	6.35		7.5m	12	.05	125	DO7
24	1S2452		6.35	250m	10m	15	10m	150J	
25	1S2453		6.35	250m	10m	15	5.0m	150J	
26	1S2454		6.35	250m	10m	15	2.0m	150J	
27	1N3501	2	6.35	250m	7.5m	12		125A	DO7
28	1N3502	2	6.35	250m	7.5m	12		125A	DO7
29	1N3503	2	6.35	250m	7.5m	12		125A	DO7
30	1N3504	2	6.35	250m	7.5m	12		125A	DO7
31	1N4890	5	6.35	.40	7.5m	10	.10	175	DO7
32	1N4890A	5	6.35	.40	7.5m	10	.10	175	DO7
33	1N4891	5	6.35	.40	7.5m	10	.05	175	DO7
34	1N4891A	5	6.35	.40	7.5m	10	.05	175	DO7
35	1N4892	5	6.35	.40	7.5m	10	.10	175	DO7
36	1N4892A	5	6.35	.40	7.5m	10	.10	175	DO7
37	1N4893	5	6.35	.40	7.5m	10	.05	175	DO7
38	1N4893A	5	6.35	.40	7.5m	10	.05	175	DO7
39	1N4894	5	6.35	.40	7.5m	10	.10	175	DO7
40	1N4894A	5	6.35	.40	7.5m	10	.10	175	DO7
41	1N4895	5	6.35	.40	7.5m	10	.05	175	DO7
42	1N4895A	5	6.35	.40	7.5m	10	.05	175	DO7
43	1N4565B		6.4		.50m	200	1.0	150	DO7
44	1N4566B		6.4		.50m	200	.50	150	DO7
45	1N4567B		6.4		.50m	200	.20	150	DO7
46	1N4568B		6.4		.50m	200	.10	150	DO7
47	1N4569B		6.4		.50m	200	.05	150	DO7
48	1N4570B		6.4		1.0m	100	1.0	150	DO7
49	1N4571B		6.4		1.0m	100	.50	150	DO7
50	1N4572B		6.4		1.0m	100	.20	150	DO7
51	1N4573B		6.4		1.0m	100	.10	150	DO7
52	1N4574B		6.4		1.0m	100	.05	150	DO7
53	1N4575B		6.4		2.0m	50	1.0	150	DO7
54	1N4576B		6.4		2.0m	50	.50	150	DO7
55	1N4577B		6.4		2.0m	50	.20	150	DO7
56	1N4578B		6.4		2.0m	50	.10	150	DO7
57	1N4579B		6.4		2.0m	50	.05	150	DO7
58	1N4580B		6.4		4.0m	25	1.0	150	DO7
59	1N4581B		6.4		4.0m	25	.50	150	DO7
60	1N4582B		6.4		4.0m	25	.20	150	DO7
61	1N4583B		6.4		4.0m	25	.10	150	DO7
62	1N4584B		6.4		4.0m	25	.05	150	DO7
63	THZ4565		6.4		0.5m	200	100 p	75	u45b
64	THZ4566		6.4		0.5m	200	50 p	75	u45b
65	THZ4567		6.4		0.5m	200	20 p	75	u45b
66	THZ4568		6.4		0.5m	200	10 p	75	u45b
67	THZ4569		6.4		0.5m	200	5.0 p	75	u45b
68	THZ4570		6.4		1.0m	200	100 p	75	u45b
69	THZ4571		6.4		1.0m	200	50 p	75	u45b
70	THZ4572		6.4		1.0m	200	20 p	75	u45b
71	THZ4573		6.4		1.0m	200	10 p	75	u45b
72	THZ4574		6.4		1.0m	200	5.0 p	75	u45b
73	THZ4575		6.4		2.0m	50	100 p	75	u45c
74	THZ4576		6.4		2.0m	50	50 p	75	u45c
75	THZ4577		6.4		2.0m	50	20 p	75	u45c
76	THZ4578		6.4		2.0m	50	10 p	75	u45c
77	THZ4579		6.4		2.0m	50	5.0 p	75	u45c
78	CH4565A	5	6.4		500u	200	1.0	200J	u10
79	CH4566A	5	6.4		500u	200	500m	200J	u10
80	CH4567A	5	6.4		500u	200	200m	200J	u10
81	CH4568A	5	6.4		500u	200	100m	200J	u10
82	CH4569A	5	6.4		500u	200	50m	200J	u10
83	CH4570A	5	6.4		1.0m	100	1.0	200J	u10
84	CH4571A	5	6.4		1.0m	100	500m	200J	u10
85	CH4572A	5	6.4		1.0m	100	200m	200J	u10
86	CH4573A	5	6.4		1.0m	100	100m	200J	u10
87	CH4574A	5	6.4		1.0m	100	50m	200J	u10
88	CH4575A	5	6.4		2.0m	50	1.0	200J	u10
89	CH4576A	5	6.4		2.0m	50	500m	200J	u10
90	CH4577A	5	6.4		2.0m	50	200m	200J	u10
91	CH4578A	5	6.4		2.0m	50	100m	200J	u10
92	CH4579A	5	6.4		2.0m	50	50m	200J	u10
93	CH4580A	5	6.4		4.0m	25	1.0	200J	u10
94	CH4581A	5	6.4		4.0m	25	500m	200J	u10
95	CH4582A	5	6.4		4.0m	25	200m	200J	u10
96	CH4583A	5	6.4		4.0m	25	100m	200J	u10
97	CH4584A	5	6.4		4.0m	25	50m	200J	u10
98	MCLTC6010	10	6.4	180m	4.0m	50	1.0	175J	C191
99	MCLTC6025	10	6.4	180m	4.0m	50	2.5	175J	C191
100	MCLTC6050	10	6.4	180m	4.0m	50	5.0	175J	C191
101	MCLTC6100	10	6.4	180m	4.0m	50	10	175J	C191
102	RD6.2MB3	3	6.4	200m	5.0m	50		150	
103	1SZ45A	5	6.4	250m	1.0m	100	1.0	175	A277b
104	1SZ46A	5	6.4	250m	1.0m	100	.50	175	A277b
105	1SZ47	5	6.4	250m	1.0m	100	.20	175	A277b
106	1SZ47A	5	6.4	250m	1.0m	100	.20	175	A277b
107	1SZ48	5	6.4	250m	1.0m	100	.10	175	A277b
108	RD6.2JSB3(A)								
		2.5	6.40	400m	5.0m	60	3.3	175J	DO34
109	HZS6.2JB3	2.6	6.40	400m	5.0m	20		200J	A380d

LINE No.	4 TYPE No.	3 TOL ± (%)	1 NOM. REF. VOLT. (V)	2 PD @ 25°C MAX (W)	TEST CUR. Izt (A)	DYN. IMP. MAX (Ω)	TEMP. COEFF Tc MAX	TEMP MAX (°C)	DWG. NO.
110	1N4565	5	6.4	.40	.50m	200	1	75R	DO7
111	1N4565A	5	6.4	.40	.50m	200	1	100R	DO7
112	1N4566	5	6.4	.40	.50m	200	.5	75R	DO7
113	1N4566A	5	6.4	.40	.50m	200	.5	100R	DO7
114	1N4567	5	6.4	.40	.50m	200	.2	75R	DO7
115	1N4567A	5	6.4	.40	.50m	200	.2	100R	DO7
116	1N4568	5	6.4	.40	.50m	200	.1	75R	DO7
117	1N4568A	5	6.4	.40	.50m	200	.1	100R	DO7
118	1N4569	5	6.4	.40	.50m	200	.05	75R	DO7
119	1N4569A	5	6.4	.40	.50m	200	.05	100R	DO7
120	1N4570	5	6.4	.40	1.0m	100	1	75R	DO7
121	1N4570A	5	6.4	.40	1.0m	100	1	100R	DO7
122	1N4571	5	6.4	.40	1.0m	100	.5	75R	DO7
123	1N4571A	5	6.4	.40	1.0m	100	.5	100R	DO7
124	1N4572	5	6.4	.40	1.0m	100	.2	75R	DO7
125	1N4572A	5	6.4	.40	1.0m	100	.2	100R	DO7
126	1N4573	5	6.4	.40	1.0m	100	.1	75R	DO7
127	1N4573A	5	6.4	.40	1.0m	100	.1	100R	DO7
128	1N4574	5	6.4	.40	1.0m	100	.05	75R	DO7
129	1N4574A	5	6.4	.40	1.0m	100	.05	100R	DO7
130	1N4575	5	6.4	.40	2.0m	50	1	75R	DO7
131	1N4575A	5	6.4	.40	2.0m	50	1	100R	DO7
132	1N4576	5	6.4	.40	2.0m	50	.5	75R	DO7
133	1N4576A	5	6.4	.40	2.0m	50	.5	100R	DO7
134	1N4577	5	6.4	.40	2.0m	50	.2	75R	DO7
135	1N4577A	5	6.4	.40	2.0m	50	.2	100R	DO7
136	1N4578	5	6.4	.40	2.0m	50	.1	75R	DO7
137	1N4578A	5	6.4	.40	2.0m	50	.1	100R	DO7
138	1N4579	5	6.4	.40	2.0m	50	.05	75R	DO7
139	1N4579A	5	6.4	.40	2.0m	50	.05	100R	DO7
140	1N4580	5	6.4	.40	4.0m	25	1	75R	DO7
141	1N4580A	5	6.4	.40	4.0m	25	1	100R	DO7
142	1N4581	5	6.4	.40	4.0m	25	.5	75R	DO7
143	1N4581A	5	6.4	.40	4.0m	25	.5	100R	DO7
144	1N4582	5	6.4	.40	4.0m	25	.2	75R	DO7
145	1N4582A	5	6.4	.40	4.0m	25	.2	100R	DO7
146	1N4583	5	6.4	.40	4.0m	25	.1	75R	DO7
147	1N4583A	5	6.4	.40	4.0m	25	.1	100R	DO7
148	1N4584	5	6.4	.40	4.0m	25	.05	75R	DO7
149	1N4584A	5	6.4	.40	4.0m	25	.05	100R	DO7
150	BZV38	5	6.4	400m§	7.5m	20	620m	60A	A298x
151	CD4565	5	6.4	400m	500u	200	1.0	200J	u37b
152	CD4565A	5	6.4	400m	500u	200	1.0	200J	u37b
153	CD4566	5	6.4	400m	500u	200	500m	200J	u37b
154	CD4566A	5	6.4	400m	500u	200	500m	200J	u37b
155	CD4567	5	6.4	400m	500u	200	200m	200J	u37b
156	CD4567A	5	6.4	400m	500u	200	200m	200J	u37b
157	CD4568	5	6.4	400m	500u	200	100m	200J	u37b
158	CD4568A	5	6.4	400m	500u	200	100m	200J	u37b
159	CD4569	5	6.4	400m	500u	200	50m	200J	u37b
160	CD4569A	5	6.4	400m	500u	200	50m	200J	u37b
161	CD4570	5	6.4	400m	1.0m	100	1.0	200J	u37b
162	CD4570A	5	6.4	400m	1.0m	100	1.0	200J	u37b
163	CD4571	5	6.4	400m	1.0m	100	500m	200J	u37b
164	CD4571A	5	6.4	400m	1.0m	100	500m	200J	u37b
165	CD4572	5	6.4	400m	1.0m	100	200m	200J	u37b
166	CD4572A	5	6.4	400m	1.0m	100	200m	200J	u37b
167	CD4573	5	6.4	400m	1.0m	100	100m	200J	u37b
168	CD4573A	5	6.4	400m	1.0m	100	100m	200J	u37b
169	CD4574	5	6.4	400m	1.0m	100	50m	200J	u37b
170	CD4574A	5	6.4	400m	1.0m	100	50m	200J	u37b
171	CD4575	5	6.4	400m	2.0m	50	1.0	200J	u37b
172	CD4575A	5	6.4	400m	2.0m	50	1.0	200J	u37b
173	CD4576	5	6.4	400m	2.0m	50	500m	200J	u37b
174	CD4576A	5	6.4	400m	2.0m	50	500m	200J	u37b
175	CD4577	5	6.4	400m	2.0m	50	200m	200J	u37b
176	CD4577A	5	6.4	400m	2.0m	50	200m	200J	u37b
177	CD4578	5	6.4	400m	2.0m	50	100m	200J	u37b
178	CD4578A	5	6.4	400m	2.0m	50	100m	200J	u37b
179	CD4579	5	6.4	400m	2.0m	50	50m	200J	u37b
180	CD4579A	5	6.4	400m	2.0m	50	50m	200J	u37b
181	CD4580	5	6.4	400m	4.0m	25	1.0	200J	u37b
182	CD4580A	5	6.4	400m	4.0m	25	1.0	200J	u37b
183	CD4581	5	6.4	400m	4.0m	25	500m	200J	u37b
184	CD4581A	5	6.4	400m	4.0m	25	500m	200J	u37b
185	CD4582	5	6.4	400m	4.0m	25	200m	200	u37b
186	CD4582A	5	6.4	400m	4.0m	25	200m	200J	u37b
187	CD4583	5	6.4	400m	4.0m	25	100m	200	u37b
188	CD4583A	5	6.4	400m	4.0m	25	160m	200J	u37b
189	CD4584	5	6.4	400m	4.0m	25	50m	200	u37b
190	CD4584A	5	6.4	400m	4.0m	25	50m	200J	u37b
191	EQA02-06EF	7	6.4	500m	20m	20	.03	175J	A1ac
192	HZ7A1	2	6.45	400m	5.0m	15	2.2mV	175J	DO35
193	HZ7A1L	2	6.45	400m	500u	60	1.5	175J	DO35
194	HZ7HA1	2	6.45	500m	5.0m	15	2.2mV	175	DO35
195	RD6.8EB1		6.46	500m	20m	08		175J	A277b
196	RD6.8EL1		6.46	500m	1.0m	8.0		175J	A277b
197	RD6.8EN1		6.46	500m	5.0m	8.0			
198	HZ6.8EB1	2.5	6.46	500m	20m	6.0		175J	DO35
199	1N2043A	5	6.5		1	.80		150A	S19a
200	MC70	5†	6.5		10m	12			u4b
201	ZSA7	5	6.5		5.0m	30	500m	150A	A1bk
202	1SZ57		6.5	250m	10m	15	1.0	175J	DO35
203	1SZ58		6.5	250m	10m	15	500m	175J	DO35
204	1SZ59		6.5	250m	10m	15	200m	175J	DO35
205	1SZ60		6.5	250m	10m	15	100m	175J	DO35
206	RD7AL		6.5	250m	10m	12		175J	A277b
207	1S1715		6.5	.30	10m	10		125J	
208	MC6009,A	5†	6.5	.30	10m	12		175	A2m
209	KZ465C	1	6.5	400m§	250u	100	4.7	175A	DO7
210	LVA165C	1	6.5	400m	250u	200	4.7	150A	DO14
211	LVA465C	1	6.5	400m	250u	100	4.7	150A	DO7
212	KZ465B	2	6.5	400m§	250u	100	4.7	175A	DO7
213	LVA165B	2	6.5	400m	250u	200	4.7	150A	DO14
214	LVA465B	2	6.5	400m	250u	100	4.7	150A	DO7
215	1N3779	3	6.5	.40	7.5m	10	1.5	200	DO7
216	1N3780	3	6.5	.40	7.5m	10	1.0	200	DO7
217	1N3781	3	6.5	.40	7.5m	10	.50	200	DO7
218	1N3782	3	6.5	.40	7.5m	10	.20	200	DO7
219	1N3783	3	6.5	.40	7.5m	10	.10	200	DO7

SYMBOLS AND CODES EXPLAINED IN INTERPRETER

2. VOLTAGE REFERENCE DIODES - $V_Z \geq 6.2$ V (Cont'd)

IN ORDER OF: (1) REF. VOLTAGE (2) PD MAX (3) TOLERANCE & (4) TYPE NUMBER

LINE No.	4 TYPE No.	3 TOL ± (%)	1 NOM. REF. VOLT. (V)	2 PD @ 25°C MAX (W)	TEST CUR. Izt (A)	DYN. IMP. MAX (Ω)	TEMP. COEFF Tc MAX	TEMP MAX (°C)	DWG. NO.
1	1N3784	3	6.5	.40	7.5m	10	.05	200	DO7
2	KZ465A	3	6.5	400m§	250u	100	4.7	175A	DO7
3	LVA165A	3	6.5	400m	250u	200	4.7	150A	DO14
4	LVA465A	3	6.5	400m	250u	100	4.7	150A	DO7
5	T-LVA465A	4†	6.5	400m	250u	100	3.0mV	175J	DO35
6	BZV10	5	6.5	400m	2.0m	50	1.0	70	DO35
7	BZV11	5	6.5	400m	2.0m	50	500m	70	DO35
8	BZV12	5	6.5	400m	2.0m	50	200m	70	DO35
9	BZV13	5	6.5	400m	2.0m	50	100m	70	DO35
10	BZV14	5	6.5	400m	2.0m	50	50m	70	DO35
11	BZV37	5	6.5	400m	5.0m	20			DO35
12	BZX90	5	6.5	400m	7.5m	15	1.0	100A	DO35
13	BZX91	5	6.5	400m	7.5m	15	500m	100A	DO35
14	BZX92	5	6.5	400m	7.5m	15	200m	100A	DO35
15	BZX93	5	6.5	400m	7.5m	15	100m	100A	DO35
16	BZX94	5	6.5	400m	7.5m	15	50m	100A	DO35
17	C8000	5	6.5	400m	100u	750	1.0	175A	DO7
18	C8000A	5	6.5	400m	100u	750	500m	175A	DO7
19	C8000B	5	6.5	400m	100u	750	200m	175A	DO7
20	C8000C	5	6.5	400m	100u	750	100m	175A	DO7
21	C8000D	5	6.5	400m	100u	750	50m	175A	DO7
22	C8001	5	6.5	400m	250u	400	1.0	175A	DO7
23	C8001A	5	6.5	400m	250u	400	500m	175A	DO7
24	C8001B	5	6.5	400m	250u	400	200m	175A	DO7
25	C8001C	5	6.5	400m	250u	400	100m	175A	DO7
26	C8001D	5	6.5	400m	250u	400	50m	175A	DO7
27	C8002	5	6.5	400m	500u	200	1.0	175A	DO7
28	C8002A	5	6.5	400m	500u	200	500m	175A	DO7
29	C8002B	5	6.5	400m	500u	200	200m	175A	DO7
30	C8002C	5	6.5	400m	500u	200	100m	175A	DO7
31	C8002D	5	6.5	400m	500u	200	50m	175A	DO7
32	CD826	5	6.5	400m	7.5m	15	200m	200J	u37b
33	KZ465	5†	6.5	400m		100	3.0	175A	DO7
34	ZS7	5†	6.5	400m	5.0m	15	500m	150A	C3h
35	LVA165	8	6.5	400m	250u	200	4.7	150A	DO14
36	LVA465	8	6.5	400m	250u	100	4.7	150A	DO14
37	MTZ609,A	5†	6.5	.50	10m	12		175A	A60e
38	PS1300	5	6.5	500m§	50u	1.2k	1.0	75A	A372
39	PS1300A	5	6.5	500m§	50u	1.2k	1.0	100A	A372
40	PS1301	5	6.5	500m§	50u	1.2k	500m	75A	A372
41	PS1301A	5	6.5	500m§	50u	1.2k	500m	100A	A372
42	PS1302	5	6.5	500m§	50u	1.2k	200m	75A	A372
43	PS1302A	5	6.5	500m§	50u	1.2k	200m	100A	A372
44	PS1303	5	6.5	500m§	50u	1.2k	100m	75A	A372
45	PS1303A	5	6.5	500m§	50u	1.2k	100m	100A	A372
46	PS1304	5	6.5	500m§	50u	1.2k	50m	75A	A372
47	PS1304A	5	6.5	500m§	50u	1.2k	50m	100A	A372
48	PS1305	5	6.5	500m§	100u	750	1.0	75A	A372
49	PS1305A	5	6.5	500m§	100u	750	1.0	100A	A372
50	PS1306	5	6.5	500m§	100u	750	500m	75A	A372
51	PS1306A	5	6.5	500m§	100u	750	500m	100A	A372
52	PS1307	5	6.5	500m§	100u	750	200m	75A	A372
53	PS1307A	5	6.5	500m§	100u	750	200m	100A	A372
54	PS1308	5	6.5	500m§	100u	750	100m	75A	A372
55	PS1308A	5	6.5	500m§	100u	750	100m	100A	A372
56	PS1309	5	6.5	500m§	100u	750	50m	75A	A372
57	PS1309A	5	6.5	500m§	100u	750	50m	100A	A372
58	PS1310	5	6.5	500m§	250u	400	1.0	75A	A372
59	PS1310A	5	6.5	500m§	250u	400	1.0	100A	A372
60	PS1311	5	6.5	500m§	250u	400	500m	75A	A372
61	PS1311A	5	6.5	500m§	250u	400	500m	100A	A372
62	PS1312	5	6.5	500m§	250u	400	200m	75A	A372
63	PS1312A	5	6.5	500m§	250u	400	200m	100A	A372
64	PS1313	5	6.5	500m§	250u	400	100m	75A	A372
65	PS1313A	5	6.5	500m§	250u	400	100m	100A	A372
66	PS1314	5	6.5	500m§	250u	400	50m	75A	A372
67	PS1314A	5	6.5	500m§	250u	400	50m	100A	A372
68	1N2034A	5	6.5	.75	10m	8.0	4.0	150J	DO12
69	MC6109,A	5†	6.5	.75	25m	12		175	A2d
70	RD7BL		6.5	1.0	40m	5.0		150J	A427
71	BZ065	5	6.5	1.0	30m	6.0	3.7	175J	DO41
72	1S222	10	6.5	1.0	35m	3.5	3.0	150J	A56a
73	MC6309,A	5†	6.5	1.5 ·	100m	10			A1q
74	RD7CL		6.5	3.0	120m	3.0		150J	S547
75	RD6.8FB1		6.53	1.0	40m	6.0		175J	A277r
76	1N826	5	6.55	.25	7.5m	15	.20	150S	DO7
77	1N826A	5	6.55	.25	7.5m	15	.20	175	DO7
78	1N828	5	6.55	.25	7.5m	15	.10	150S	DO7
79	1N828A	5	6.55	.25	7.5m	15	.10	175	DO7
80	HZ7A2	2	6.55	400m	5.0m	15	2.2mV	175J	DO35
81	HZ7A2L	2	6.55	400m	500u	60	1.5	175J	DO35
82	CD828	5	6.55	400m	7.5m	15	100m	200J	u37b
83	HZ7HA2	2	6.55	500m	5.0m	15	2.2mV	175	DO35
84	RD6.8MB1	3	6.6	200m	5.0m	30		150	
85	1N4611	5	6.6	.25	2.0m	75	.50	175A	DO7
86	1N4611A	5	6.6	.25	2.0m	75	.20	175A	DO7
87	1N4611B	5	6.6	.25	2.0m	75	.10	175A	DO7
88	1N4611C	5	6.6	.25	2.0m	75	.05	175A	DO7
89	1N4612	5	6.6	.25	5.0m	25	.50	175A	DO7
90	1N4612A	5	6.6	.25	5.0m	25	.20	175A	DO7
91	1N4612B	5	6.6	.25	5.0m	25	.10	175A	DO7
92	1N4612C	5	6.6	.25	5.0m	25	.05	175A	DO7
93	1N4613	5	6.6	.25	10m	15	.50	175A	DO7
94	1N4613A	5	6.6	.25	10m	15	.21	175A	DO7
95	1N4613B	5	6.6	.25	10m	15	.10	175A	DO7
96	1N4613C	5	6.6	.25	10m	15	.05	175A	DO7
97	HZ6.2PC		6.6	800m	40m	6.0		175J	DO41
98	RD6.2FC	6	6.6	1.0	40m	6.0		175J	A297c
99	HZS6.8JB1	2.4	6.61	400m	5.0m	20		200J	A380d
100	RD6.8JSB1(A)	2.5	6.61	400m	5.0m	40	3.9	175J	DO34
101	RD6.8EL		6.65	500m	1.0m	8.0		175J	A277b
102	RD6.8EN		6.65	500m	5.0m	8.0			
103	RD6.8EB2		6.66	500m	20m	8		175J	A277b
104	RD6.8EL2		6.66	500m	1.0m	8.0		175J	A277b
105	RD6.8EN2		6.66	500m	5.0m	8.0		175J	A277b
106	HZ6.8EB2	2.5	6.66	500m	20m	6.0		175J	DO35
107	HZT7A1	2.9	6.7	200m	10m	20	1.0	75	DO35
108	HZT7A2	2.9	6.7	200m	10m	20	.05	75	DO35
109	HZT7A3	2.9	6.7	200m	10m	20	.02	75	DO35
110	HZT7B1	2.9	6.7	200m	5.0m	25	1.0	75	DO35
111	HZT7B2	2.9	6.7	200m	5.0m	25	.05	75	DO35
112	HZT7B3	2.9	6.7	200m	5.0m	25	.02	75	DO35
113	HZT7C1	2.9	6.7	200m	1.0m	100	1.0	75	DO35
114	HZT7C2	2.9	6.7	200m	1.0m	100	.05	75	DO35
115	BZY88C6V8	5	6.7	400m	5.0m	15	4.7	200J	DO7
116	EQA01-07R	10	6.7	500m	15m	8.0	.04	125J	A387
117	BZ067	5	6.7	1.0	30m	6.0	3.9	175J	DO41
118	RD6.8FB2		6.72	1.0	40m	6.0		175J	A277r
119	HZ7A3	2	6.75	400m	5.0m	15	2.2mV	175J	DO35
120	HZ7A3L	2	6.75	400m	5.0m	15	2.2mV	175J	DO35
121	HZ7HA3	2	6.75	500m	5.0m	15	2.2mV	175	DO35
122	3KZ7.5	10†	6.75	3.0 §	175m		.06		A3ak§
123	HZS6.8JB2	2.5	6.79	400m	5.0m	20		200J	A380d
124	RD6.8JSB2(A)	2.5	6.79	400m	5.0m	40	3.9	175J	DO34
125	TZPD6.8		6.8		5.0m	8.0	5.0		DO35
126	TZPY6.8		6.8		100m	2.0	4.0		DO41
127	1N2765	5	6.8		7.5m	20	.50	175A	A1gd
128	1N2765A	5	6.8		7.5m	20	.25	175A	A1gd
129	BZV49C6V8	5	6.8		5.0m	8.0	1.0	150J	M1008
130	BZW03C6V8	5	6.8		175m	0.5	7.	175C	A333d
131	CD4736A	5.0	6.8		37m	3.5		200	u52
132	CD5342B	5	6.8		175m	1.0	4.8	200J	u39b
133	MMBZ5235	5	6.8		20m	5.0			M500
134	NC6V8	5	6.8		5.0m	15	4.5		u48
135▼	TMPZ5235	5.0	6.8		20m	5.0			TO236Ø
136	TSC6087CHIP	5	6.8		1.0m				u46
137	ZTK6.8	5	6.8		5.0m	25	200m	150J	DO35
138	BZX55D6V8	10	6.8		5.0m	15			A1ct
139	DSZ3006	10	6.8		75m	2.0	4.0		A266
140	1N1984B	1	6.8	150m	5.0m	7.0	3.0	150	C1
141	1N1984A	5	6.8	150m	5.0m	7.0	3.0	150	C1
142	BZ6.8	5	6.8	.15	5.0m	25		170A	DO7
143	1N1984	10	6.8	150m	5.0m	7.0	3.0	150	C1
144	1N1930B	1	6.8	200m	5.0m	7.0	3.0	150A	A82e
145	RD6.8MB2	3	6.8	200m	5.0m	30		150	
146	1N1930A	5	6.8	200m	5.0m	7.0	3.0	150A	A82e
147	02Z6.8A	5	6.8	200m	8.0m	15	4.0	175J	DO35
148	BZX84C6V8	5	6.8	200m	5.0m	15	5.0	150J	M500d
149	ESZ6.8	5	6.8	200m	10m	8.0 †			TO106
150	1N1930	10	6.8	200m	5.0m	7.0	3.0	150A	A82e
151	CZ6	10	6.8	200m	5.0m				TO106
152	1N710A	5	6.8	250m	25m	4.7	3.8	175A	DO7
153	1N4692	5	6.8	.25	.05m			200A	DO14
154	BZX58C6V8	5	6.8	250m	10m	7.0	3.0	150A	DO7
155	BZY83C6V8	5	6.8	.25	5.0m	8.0	7	150J	C1q
156	BZY85C6V8	5	6.8	.25 §	5.0m	8.0	7	150J	A171f
157	CLVA68A	5	6.8	250m	1.0m	15 †		175	u20j
158	K681A	5	6.8	250m§	250u	25	2.0mV	175A	DO7
159	PD6010,A	5†	6.8	.25	5.0m	25		150	A109
160	PD6051	5	6.8	.25	10m	4.0		150	A2c
161	PD6206	5	6.8	250m	1.0m	50		175A	A109
162	1/4M6.8Z10	10†	6.8	250m	9.2m	7.0		175J	E204h
163	1N710	10	6.8	250m	25m	4.7	3.8	175A	DO7
164	BZY83D6V8	10	6.8	.25	5.0m	15	7	150J	C1q
165	K681	10	6.8	250m§	250u	25	2.0mV	175A	DO7
166	1N710B	20	6.8	.25	25m	4.7			DO7
167	MC6010,A	5†	6.8	.30	10m	14		175	A2m
168	BZX88C6V8	5	6.8	350m	5.0m	15	4.5	175J	A412
169	MA4068	5	6.8	370m	5.0m	15	1.2	200J	DO34
170	MTZ6.8		6.8	400m	20m	10		175J	DO34
171	TZ6.8		6.8	400m	20m	10		175J	DO35
172	1N5526D	1	6.8	400m§	1.0m	30		175A	DO7
173	1N5732D	1	6.8	400m§	10m	10	4.4	200A	DO35
174	1N6087D	1	6.8	400m§	10u	50	6.0	175L	DO7
175	KZ68C	1	6.8	400m§	1.0m	50		175J	DO7
176	KZ468C	1	6.8	400m§	250u	100	5.0	175A	DO7
177	LVA468C	1	6.8	400m	1.0m	50		175A	DO7
178	LVA168C	1	6.8	400m	250u	200	5.0	150A	DO14
179	LVA468C	1	6.8	400m	250u	100	5.0	150A	DO7
180	Z5A6.8	1†	6.8	400m§	5.0m	10	7.0	200J	DO7
181	1N5526C	2	6.8	400m§	1.0m	30		175A	DO7
182	1N5732C	2	6.8	400m§	10m	10	4.4	200A	DO35
183	1N6087C	2	6.8	400m§	10u	50	6.0	175L	DO7
184	BZX79B6V8	2	6.8	400m§	5.0m	15	3.0mV	200J	DO35
185	KZ68B	2	6.8	400m§	1.0m	50		175A	DO7
186	KZ468B	2	6.8	400m§	250u	100	5.0	175A	DO7
187	LVA68B	2	6.8	400m	1.0m	50		175A	DO7
188	LVA168B	2	6.8	400m	250u	200	5.0	150A	DO14
189	LVA468B	2	6.8	400m	250u	100	5.0	150A	DO7
190	KZ468A	3	6.8	400m§	250u	100	5.0	175A	DO7
191	LVA168A	3	6.8	400m	250u	200	5.0	150A	DO14
192	LVA468A	3	6.8	400m	250u	100	5.0	150A	DO7
193	T-LVA468A	3†	6.8	400m	250u	100	3.4mV	175J	DO35
194	1N754A	5	6.8	400m	20m	5.0	3.5	175A	A1
195	1N957B	5	6.8	400m	18m	4.5		175S	A398a
196	1N3514	5	6.8	.40	20m	3.0	3.5	200A	DO7
197	1N4099	5	6.8	400m	.25m	200		200J	DO7
198	1N5526B	5	6.8	400m§	1.0m	30		175A	DO7
199	1N5732B	5	6.8	400m§	10m	10	4.4	200A	DO35
200	1N6087B	5	6.8	400m§	10u	50	6.0	175L	DO7
201	1S2068A	5	6.8	.40	5.0m	15	4.5	150A	A1
202	1S7068,B	5†	6.8	.40	5.0m	40	4.5	150A	A1
203	1S7068A	5	6.8	.40	5.0m	15	4.5	150A	A1
204	BZX79C6V8	5	6.8	400m§	5.0m	15	3.0mV	200J	DO35
205	BZX96C6V8	5	6.8	400m	5.0m	8.0	4.0	150J	DO7
206	CD754A	5	6.8	400m	20m	5.0	5.3	200J	u39a
207	CD4099	5	6.8	400m	250u	200	4.0	200J	u39a
208	CH754	5	6.8	400m	20m	3.0	5.0	200J	u10
209	CH4099	5	6.8	400m	250u	200	6.0	200J	u10
210	CH5235	5	6.8	400m	20m	5.0	5.0	200J	u10
211	GSZ6.8A	5	6.8	400m	20m	10			A69a
212	KZ68A	5	6.8	400m§	1.0m	50		175A	DO7
213	KZ368A	5†	6.8	400m	1.0m	50		175A	DO7
214	KZ468	5†	6.8	400m		100	3.4	175A	DO7
215	LVA68A	5	6.8	400m	1.0m	50		175A	DO7
216	MA1068	5	6.8	400m	5.0m	15	1.2	200J	A24d
217	RD6.8JB	5	6.8	400m	5.0m	40		175J	DO35

SYMBOLS AND CODES EXPLAINED IN INTERPRETER

2. VOLTAGE REFERENCE DIODES - $V_Z \geq 6.2$ V (Cont'd)

IN ORDER OF: (1) REF. VOLTAGE (2) PD MAX (3) TOLERANCE & (4) TYPE NUMBER

LINE No.	4 TYPE No.	3 TOL ± (%)	1 NOM. REF. VOLT. (V)	2 PD @ 25°C MAX (W)	TEST CUR. Izt (A)	DYN. IMP. MAX (Ω)	TEMP. COEFF Tc MAX	TEMP MAX (°C)	DWG. NO.
1	RD6.8JSB(A)								
		5.0	6.8	400m	5.0m	40	3.9	175J	DO34
2	T-LVA68A	5†	6.8	400m	1.0m	50		175J	DO35
3	T-LVA368A	5†	6.8	400m	1.0m	50		175J	DO35
4	Z5B6.8	5†	6.8	400m§	5.0m	10	7.0	200J	DO7
5	ZMM754A	5.0	6.8	400m§	20m	5.0	3.5	175J	F139
6	LVA168	7	6.8	400m	250u	200	5.0	150A	DO14
7	LVA468	7	6.8	400m	250u	100	5.0	150A	DO14
8	1N754	10	6.8	400m	20m	5.0	3.5	175A	A1
9	1N957A	10	6.8	400m	18m	4.5		175S	A398a
10	1N5526A	10	6.8	400m§	1.0m			175A	DO7
11	1N6087A	10	6.8	400m§	10u	50	6.0	175L	DO7
12	GSZ6.8	10	6.8	400m	20m	10			A69a
13	ZMM754	10	6.8	400m§	20m	5.0	3.5	175J	F139
14	1N957	20	6.8	400m	18m	4.5		175S	A398a
15	1N5526	20	6.8	400m§	1.0m			175A	DO7
16	1N6087	20	6.8	400m§	10u	50	6.0	175L	DO7
17	GZA6.8		6.8	500m		7.0 †	6.5		A159
18	1N5996D	1	6.8	500m	5.0m	8.0		200J	DO35
19	Z0A6.8	1†	6.8	500m	5.0m	6.0 †	7.0	200J	DO29
20	1N5996C	2	6.8	500m	5.0m	8.0		200J	DO35
21	1N5235B	5	6.8	500m	20m	3.0	5.0	200A	A398a
22	1N5851B	5	6.8	500m	20m	17		150C	M859
23	1N5996B	5	6.8	500m	5.0m	8.0		200J	DO35
24	BZX46C6V8	5	6.8	500m	18m	4.5	8.0	175A	DO35
25	BZX55C6V8	5	6.8	500m	5.0m	8.0	4.5	175A	DO35
26	BZX83C6V8	5	6.8	500m	5.0m	8.0	4.5	175A	DO35
27	CD68	5	6.8	500m	1.0m	50		200J	DO7
28	CTZ6.8A	5	6.8	500m	20m	30	350	200	DO35
29	MA3068L	5.0	6.8	500m	5.0m	15	1.2	125J	M990
30	MA5068	5	6.8	500m	5.0m	15	1.2	125J	M990
31	MLL5235B	5.0	6.8	500m§	20m	5.0	5.0	200J	F140
32	MTZ610,A	5†	6.8	.50	10m	14		175A	A60e
33	PS8909	5	6.8	.50	20m	2.0	4.5	150	A60p
34	RD6.8EB	5	6.8	500m	20m	10	4.3	175J	DO35
35▼	SZ.5-6.8-5-25								
		5.0	6.8	500m	25m			175	u5a
36	TS06800	5	6.8	500m	1.0u			200J	DO35
37	Z0B6.8	5†	6.8	500m	5.0m	6.0 †	7.0	200J	DO29
38	ZMM5235B	5.0	6.8	500m§	20m	5.0	5.0	200J	F139
39	ZPD6V8	5†	6.8	500m	5.0m	150	3.1mV	175J	DO35
40	ZPD6.8	5	6.8	500m	5.0m	8.0	4.5	175J	DO35
41	05Z6.8	6.0	6.8	500m	5.0m	15	4.8	175J	DO35
42	BZX97C6V8	6	6.8	500m	5.0m	8.0	4.5	175J	DO35
43	ZMM6.8	6†	6.8	500m	5.0m	8.0	4.5	175J	F135
44	BZV55C6V8	6.2	6.8	500m	5.0m	15	3.0	200J	F139
45	BZV60C6V8	6.2	6.8	500m	5.0m	15	3.0	200J	DO34
46	EQA02-07AB	7	6.8	500m	20m	15	.04	175J	A1ac
47	1N3400	10	6.8	500m	20m	35	5.0	200S	P5
48	1N3412	10	6.8	.50	1.0m	300	1.4	200A	P5
49	1N5235A	10	6.8	500m	20m	3.0	5.0	200A	A398a
50	1N5851A	10	6.8	500m	20m	17		150C	M859
51	1N5996A	10	6.8	500m	5.0m	25		200J	DO35
52	CTZ6.8	10	6.8	500m	20m	30	350	200	DO35
53	MLL5235A	10	6.8	500m§	20m	5.0	5.0	200J	F140
54▼	SZ.5-6.8-10-25								
		10	6.8	500m	25m			175	u5a
55	ZMM5235A	10	6.8	500m§	20m	5.0	5.0	200J	F139
56	1N5235	20†	6.8	.50	20m			200A	A398a
57	1N5996	20	6.8	500m	5.0m	25		200J	DO35
58	MLL5235	20	6.8	500m§	20m	5.0		200J	F140
59▼	SZ.5-6.8-20-25								
		20	6.8	500m	25m			175	u5a
60	ZMM5235	20	6.8	500m§	20m	5.0	5.0	200J	F139
61	LVA368C	1	6.8	600m	1.0m	45		175A	DO14
62	LNA368B	2	6.8	600m	1.0m	50		175A	DO7
63	LVA368B	2	6.8	600m	1.0m	45		175A	DO14
64	1N4628	5	6.8	.60	19m	700	6.4	200A	DO14
65	GLA68,A,B	5†	6.8	600m	1.0m	50	5.0	175	DO7
66	LNA368A	5	6.8	600m	1.0m	50		175A	DO7
67	LVA368A	5	6.8	600m	1.0m	45		175A	DO14
68	LNA368	10	6.8	600m	1.0m	50		175A	DO7
69	MLNA368B	2	6.8	750m	1.0m	50		175A	A249e
70	1N1510A	5	6.8	750m	22m	3.0	5.0	200S	DO12
71	1N3675B	5	6.8	750m§	19m	4.5		175S	A1az
72	BZV41C6V8	5	6.8	750m	5.0m	15	4.5	175S	A412
73	MC6110,A	5†	6.8	.75	25m	14		175A	A2d
74	MGLA68,A,B	5†	6.8	750m	1.0m	50	5.0	175A	A249e
75	MLNA368A	5	6.8	750m	1.0m	50		175A	A249e
76	MLV754A	5	6.8	750m	20m	2.0		175A	A2j
77	TSZ6.8	5	6.8	750m	10m	12			TO39
78	1N1510	10	6.8	750m	22m	3.0	5.0	200S	DO12
79	1N3675A	10	6.8	750m§	19m	4.5		175S	A1az
80	MLNA368	10	6.8	750m	1.0m	50		175A	A249e
81	1N3675	20	6.8	750m§	19m	4.5		175S	A1az
82	HZ6.8PB		6.8	800m	40m	6.0		175J	DO41
83	AP6.8A,B		6.8	1.0 †	20m	10			DO35
84	DZB6.8		6.8	1.0	10m	60	3.0mV	150J	A298ap
85	GZB6.8		6.8	1.0	10m	60	3.0mV	150J	A298ap
86	GZB6.8C		6.8	1.0		60	3.0mV		A298ap
87	MA2068#E		6.8	1.0	40m	6.0	3.1	200J	A277r
88	TSC4736CHIP								
			6.8	1.0	37m	3.5			u46
89	LVA1068C	1	6.8	1.0	1.0m	50		175	A266c
90	Z4A6.8	1†	6.8	1.0	50m	1.0	4.0	200J	DO29
91	LVA1068B	2	6.8	1.0	1.0m	50		175	A266c
92	SZ6.8	2†	6.8	1.0	20m	1.5 †	3.5	150A	A3g
93	1N1521A	5	6.8	1.0	30m	4.2	5.0	200S	DO3
94	1N1767A	5	6.8	1.0	100m	1.7		175A	DO13Ø
95	1N3016B	5	6.8	1.0	37m	3.5		175A	A31a
96	1N3829A	5	6.8	1.0	37m	1.5	4.0	175A	A31a
97	1N4158B	5	6.8	1.0 §	37m	3.5		200S	DO29
98	1N4323B	5	6.8	1.0	37m	3.5	4.0	300S	DO7
99	1N4400B	5	6.8	1.0	37m	2.0	4.0	175A	A1cm
100	1N4657	5	6.8	1.0	37m	300	5.7	200A	DO15
101	1N4736A	5	6.8	1.0	37m	3.5		200A	DO41
102	1N5559B	5	6.8	1.0 §	37m	3.5		200A	A60ac
103	APD6.8A,B	5†	6.8	1.0 †	37m	10			A1rx
104	BZV85C6V8	5	6.8	1.0	35m	3.5	2.8mV	200J	DO41
105	BZX78C6V8	5	6.8	1.0	20m	3.0	3.1mV	200J	
106	BZX85C6V8	5	6.8	1.0 §	35m	3.5	6.0	150A	DO41
107	CD4736	5	6.8	1.0	37m	3.5	5.3	200J	u39a
108	CH4736	5	6.8	1.0	37m	3.5	5.3	200J	u10
109	CZ6.8,A,B,D								
		5†	6.8	1.0	40m	12	4.0	175	DO15
110	LVA1068A	5	6.8	1.0	1.0m	50		175	A266c
111	PL6V8Z	5	6.8	1.0	100m	2.0	4.5	150J	
112	PS10016B	5	6.8	1.0	37m	3.5		175A	A60p
113	PS10060	5	6.8	1.0	37m	2.0	5.7	150	A60p
114	RD6.8FB	5	6.8	1.0	40m	6.0		175J	A297c
115	RD6.8P	5.0	6.8	1.0	5.0m	15	4.0	150J	M1008
116▼	SZ1-6.8-5-25								
		5.0	6.8	1.0	25m			175	u5b
117	TZB6.8B	5	6.8	1.0 §	10m		5.7	175A	A1ty
118	UZ8706	5	6.8	1.0	37m	3.5	4.0	175	A380
119	VR6.8,A,B	5†	6.8	1.0	37m	3.5		125A	A1b
120	Z4B6.8	5†	6.8	1.0	50m	1.0	4.0	200J	DO29
121	Z6.8	5†	6.8	1.0	20m	1.1 †	4.0	150A	DO41
122	ZB6.8	5†	6.8	1.0 §	37m	3.5		150A	A1bc
123	ZB6.8B	5	6.8	1.0	37m	3.5		100C	A1bc
124	ZM4736A	5.0	6.8	1.0 §	37m	3.5		200J	F139
125	1Z6.8	9	6.8	1.0	10m	60	4.4	150J	DO15
126	1N1521	10	6.8	1.0	30m	4.2	5.0	200S	DO3
127	1N1767	10	6.8	1.0	100m	1.7		175A	DO13Ø
128	1N3016A	10	6.8	1.0	37m	3.5		175A	A31a
129	1N3829	10	6.8	1.0	37m	1.5	4.0	175A	A31a
130	1N4158A	10	6.8	1.0 §	37m	3.5		200S	DO29
131	1N4323A	10	6.8	1.0	37m	3.5	4.0	300S	DO7
132	1N4400A	10	6.8	1.0	37m	2.0	4.0	175A	A1cm
133	1N4736	10	6.8	1.0	37m	3.5		200A	DO41
134	1N5559A	10	6.8	1.0 §	37m	3.5		200A	A60ac
135	KS468A	10	6.8	1.0	30m	5.0 †	6.5	100C	A378
136▼	SZ1-6.8-10-25								
		10	6.8	1.0	25m			175	u5b
137	TZB6.8A	10	6.8	1.0 §	10m		5.7	175A	A1ty
138	UZ8806	10	6.8	1.0	37m	3.5	4.0	175	A380
139	ZB6.8A	10	6.8	1.0	37m	3.5		100C	A1bc
140	ZM4736	10	6.8	1.0 §	37m	3.5		200J	F139
141	1N3016	20	6.8	1.0	37m	3.5		175A	A31a
142	1N4158	20	6.8	1.0 §	37m	3.5		200S	DO29
143	1N4323	20	6.8	1.0	37m	3.5	4.0	300S	DO7
144	1N4400	20	6.8	1.0	37m	2.0		175S	A266a
145	1N5559	20	6.8	1.0 §	37m			200A	A60ac
146▼	SZ1-6.8-20-25								
		20	6.8	1.0	25m			175	u5b
147	BZX61C6V8	5	6.8	1.3	50m	5.0	3.0	175J	A1bh
148	BZX87C6V8	5	6.8	1.3	20m	3.0	4.4	200J	A60al
149	BZY97C6V8	5	6.8	1.3	100m	2.0	7.0		A1rx
150	ZD6.8	5	6.8	1.3	100	2.0	4.0	150J	DO13
151	ZY6.8	5	6.8	1.3	100m	2.0	7.0	150J	A1bg
152	BZD10C6V8	6	6.8	1.3	100m	2.0	7.0		DO13
153	BZW22C6V8	6	6.8	1.3	100m	2.0	7.0		DO41
154	ZMY6.8	6	6.8	1.3	100m	2.0	3.5	200J	F149
155	ZPY6.8	11	6.8	1.3	100m	2.0	7.0	200J	DO41
156	1N5921D	1	6.8	1.5	55m	2.5		200J	DO41
157	1N5921C	2	6.8	1.5	55m	2.5		200J	DO41
158	1N3785B	5	6.8	1.5	55m	2.7	5.7	175S	C14Ø
159	1N4461	5	6.8	1.5	37m	2.5		175A	A60y
160	1N5921B	5	6.8	1.5	55m	2.5		200J	DO41
161	1S4006,A	5†	6.8	1.5	50m	.90	4.0	150A	DO1
162	BZY96C6V8	5	6.8	1.5	100m	3.0	4.4	175J	DO1
163	MC6310,A	5†	6.8	1.5	100m	12			A1q
164	1N3785A	10	6.8	1.5	55m	2.7	5.7	175S	C14Ø
165	1N5921A	10	6.8	1.5	55m	2.5		200J	DO41
166	1N3785	20	6.8	1.5	55m	2.7	5.7	175S	C14Ø
167	1N5921	20	6.8	1.5	55m	2.5		200J	DO41
168	2EZ6.8D5	5	6.8	2.0	73m	2.0		200J	A1ay
169	2VR6.8,A,B	5†	6.8	2.0	73m	2.5			A3e
170	BZV47C6V8	5	6.8	2.0	100m	2.0	4.0	175J	A344r
171	LMZ6.8A	5	6.8	2.0	73m	5.0	5.7	150A	DO41
172	ZBC6.8	5†	6.8	2.0 §	74m	2.0		150A	A1bc
173	ZBC6.8B	5	6.8	2.0	74m	2.0			A1ty
174	2EZ6.8D10	10	6.8	2.0	73m	2.0		200J	A1ay
175	LMZ6.8	10	6.8	2.0	73m	5.0	5.7	150A	DO41
176	ZBC6.8A	10	6.8	2.0	74m	2.0			A1ty
177	2EZ6.8D	20	6.8	2.0	73m	2.0		200J	A1ay
178	1N5016A	5	6.8	2.5	92m	1.6	4.0	150	A1gn
179	Z2B6.8	5†	6.8	2.5	50m	2.0	4.0	200J	DO1
180	1N5016	10	6.8	2.5	92m	1.6	4.0	150	A1gn
181	3EZ6.8D1	1.0	6.8	3.0	110m	2.0		150J	A1ay
182	3EZ6.8D2	2.0	6.8	3.0	110m	2.0		150J	A1ay
183	3EZ6.8D3	3.0	6.8	3.0	110m	2.0		150J	A1ay
184	3EZ6.8D4	4.0	6.8	3.0	110m	2.0		150J	A1ay
185	1N5063	5	6.8	3.0	75m	2.0		175A	A146u
186	3EZ6.8D5	5	6.8	3.0	110m	2.0		200J	A1ay
187	3VR6.8,A,B	5†	6.8	3.0	.25	1.0			A3al
188	BZV16C6V8	5	6.8	3.0	74m	3.5	4.0	175	DO3
189	MZ706	5	6.8	3.0	75m	2.0	4.0	175A	A146j
190	UZ706	5	6.8	3.0	75m	2.0	4.0	175A	A380
191	ZCC6.8	5†	6.8	3.0 §	75m	2.0		150A	A1ey
192	ZCC6.8B	5	6.8	3.0	75m	2.0			A1ey
193	3EZ6.8D10	10	6.8	3.0	110m	2.0		200J	A1ay
194	MZ806	10	6.8	3.0	75m	2.0	4.0	175A	A146j
195	UZ806	10	6.8	3.0	75m	2.0	4.0	175A	A380
196	ZCC6.8A	10	6.8	3.0	75m	2.0			A1ey
197	3EZ6.8D	20	6.8	3.0	110m	2.0		200J	A1ay
198	MZ906	20	6.8	3.0	75m	2.0	4.0	175A	A146j
199	UZ906	20	6.8	3.0	75m	2.0	4.0	175A	A380
200	1N1591A	5	6.8	3.5	100m	900m	5.0	200S	DO4
201	1N1591	10	6.8	3.5	100m	900m	5.0	200S	DO4
202▼	SZ3-6.8-5-25								
		5.0	6.8	5.0	25m			175	u5c
203▼	SZ3-6.8-10-25								
		10	6.8	5.0	25m			175	u5c
204▼	SZ3-6.8-20-25								
		20	6.8	5.0	25m			175	u5c
205	RD6.8EB3		6.83	500m	20m	8		175J	A277b
206	RD6.8EL3		6.83	500m	1.0m	8.0		175J	A277b
207	RD6.8EN3		6.83	500m	5.0m	8.0		175J	A277b
208	HZ6.8EB3	2.6	6.84	500m	20m	6.0		175J	DO35

SYMBOLS AND CODES EXPLAINED IN INTERPRETER

2. VOLTAGE REFERENCE DIODES - $V_Z \geq 6.2$ V (Cont'd)

IN ORDER OF: (1) REF. VOLTAGE (2) PD MAX (3) TOLERANCE & (4) TYPE NUMBER

LINE No.	4 TYPE No.	3 TOL ± (%)	1 NOM. REF. VOLT. (V)	2 PD @ 25°C MAX (W)	TEST CUR. Izt (A)	DYN. IMP. MAX (Ω)	TEMP. COEFF Tc MAX	TEMP MAX (°C)	DWG. NO.
1	1N1957B	1	6.85	400m	5.0m	7.0	3.0	150	DO7
2	HZ7B1	2	6.85	400m	5.0m	15	2.2mV	175J	DO35
3	HZ7B1L	2	6.85	400m	500u	60	1.8	175J	DO35
4	1N1957A	5	6.85	400m	5.0m	7.0	3.0	150	DO7
5	1N1957	10	6.85	400m	5.0m	7.0	3.0	150	DO7
6	HZ7HB1	2	6.85	500m	5.0m	15	2.2mV	175	DO35
7	RD6.8MB		6.88	200m	5.0m	30		150J	M500c
8	RD7AM		6.9	250m	10m	12		175J	A277b
9	EQA01-07	17	6.9	500m	15m	8.0	.04	125J	A387
10	RD7BM		6.9	1.0	40m	5.0		150J	A427
11	BZ069	5	6.9	1.0	30m	6.0	4.1	175J	DO41
12	EQB01-07	17	6.9	1.0	30m	5.0	.04	140J	A21b
13	RD7CM		6.9	3.0	120m	3.0		150J	S547
14	RD6.8FB3		6.92	1.0	40m	6.0		175J	A277r
15	1N2043B	5	7.0		1	.80		150A	S19a
16	RD6.8MB3	3	7.0	200m	5.0m	30		150	
17	1N4501	5	7.0	.21	10m	10	1.0	150S	A1hd
18	SZ7	9	7.0	.25	20m	15	.49	150J	C1f
19	RD6.8JSB3(A)	2.5	7.00	400m	5.0m	40	3.9	175J	DO34
20	MZL307	5	7.0	400m	500u	60	4.2	175J	DO35
21	MZ307,A,B,C	5	7.0	500m	10m	15	4.3	175J	DO35
22	MZ407,A,B,C	5	7.0	1.0	20	6.0	4.0	175J	DO41
23	VR7,A,B	5†	7.0	1.0	25m	5.0			A1bn
24	AW01-07	12	7.0	1.0	25m	7.0	3.5	150J	A333
25	SZL7	9	7.0	1.3	50m	2.5		150J	S442
26	2VR7,A,B	5†	7.0	2.0	250u	5.0			A3e
27	AU01-07	12	7.0	2.5	65m	7.0	3.5	165J	A333b
28	HZS6.8JB3	2.6	7.01	400m	5.0m	20		200J	A380d
29	RD7.5EB1		7.03	500m	20m	8		175J	A277b
30	RD7.5EL1		7.03	500m	1.0m	8.0		175J	A277b
31	RD7.5EN1		7.03	500m	5.0m	8.0		175J	A277b
32	HZ7.5EB1	2.5	7.04	500m	20m	6.0		175J	DO35
33	HZ7B2	2	7.05	400m	5.0m	15	2.2mV	175J	DO35
34	HZ7B2L	2	7.05	400m	500u	60	2.2	175J	DO35
35	HZ7HB2	2	7.05	500m	5.0m	15	2.2mV	175J	DO35
36	1N470B	1	7.1	200m	5.0m	10 †		150S	C1
37	1N470A	5	7.1	200m	5.0m	10 †		150S	C1
38	1N475A	5	7.1	200m	5.0m	25 †		150S	C1
39	RD7A	10	7.1	.20	10m	15	4.0	150S	A1dw
40	RD7AK		7.1	250m	10m	12		175J	A277b
41	1N763A	5†	7.1	250m	10m	7.0	4.0	150	DO7
42	1N707A	6.3	7.1	.25	5.0m	10		200A	A398
43	1N470	10	7.1	250m	5.0m	10 †		200A	C1
44	1N763	10	7.1	250m	10m	7.0		150A	A398
45	1N707	12.	7.1	.25	10m	10		200A	A398
46	KZ471C	1	7.1	400m§	250u	175	5.3	175A	DO7
47	LVA171C	1	7.1	400m	250u	350	5.2	150A	DO14
48	LVA471C	1	7.1	400m	250u	175	5.2	150A	DO7
49	KZ471B	2	7.1	400m§	250u	175	5.3	175A	DO7
50	LVA171B	2	7.1	400m	250u	350	5.2	150A	DO14
51	LVA471B	2	7.1	400m	250u	175	5.2	150A	DO7
52	KZ471A	3	7.1	400m§	250u	175	5.3	175A	DO7
53	LVA171A	3	7.1	400m	250u	350	5.2	150A	DO14
54	LVA471A	3	7.1	400m	250u	175	5.2	150A	DO7
55	T-LVA471A	3†	7.1	400m	250u	175	3.7mV	175J	DO35
56	KZ471	5†	7.1	400m		175	3.7	175A	DO7
57	LVA171	7	7.1	400m	250u	350	5.2	150A	DO14
58	LVA471	7	7.1	400m	250u	175	5.2	150A	DO14
59▼	SZ.5-7.1-5-25	5.0	7.1	500m	25m			175	u5a
60	TS07100	5	7.1	500m	1.0u			200J	DO35
61▼	SZ.5-7.1-10-25	10	7.1	500m	25m			175	u5a
62	EQA01-07S	11	7.1	500m	15m	8.0	.04	125J	A387
63	PS6470	13	7.1	.50	10m	10		200J	A1gd
64▼	SZ.5-7.1-20-25	20	7.1	500m	25m			175	u5a
65	1N2034	10	7.1	750m	10m	8.0		150A	DO12
66	RD7BK		7.1	1.0	40m	5.0		150J	A427
67	BZ071	5	7.1	1.0	30m	6.0	4.0	175J	A60t
68▼	SZ1-7.1-5-25	5.0	7.1	1.0	25m			175	u5b
69▼	SZ1-7.1-10-25	10	7.1	1.0	25m			175	u5b
70▼	SZ1-7.1-20-25	20	7.1	1.0	25m			175	u5b
71	RD7CK		7.1	3.0	120m	3.0		150J	S547
72▼	SZ3-7.1-5-25	5.0	7.1	5.0	25m			175	u5c
73▼	SZ3-7.1-10-25	10	7.1	5.0	25m			175	u5c
74▼	SZ3-7.1-20-25	20	7.1	5.0	25m			175	u5c
75	RD7.5FB1		7.13	1.0	40m	4.0		175J	A277r
76	1N378	5	7.15		.20m	20		150A	A1er
77	HZ7B3	2	7.15	400m	5.0m	15	2.2mV	175J	DO35
78	HZ7B3L	2	7.15	400m	500u	60	2.5	175J	DO35
79	HZ7HB3	2	7.15	500m	5.0m	15	2.2mV	175J	DO35
80	RD7.5MB1	3	7.2	200m	5.0m	30		150	
81	RD6.8EC	5	7.2	500m	20m	10	4.8	175J	DO35
82	EQA02-07CD	8	7.2	500m	20m	15	.04	175J	A1ac
83	HZ6.8PC		7.2	800m	40m	6.0		175J	DO41
84	HZS7.5JB1	2.4	7.21	400m	5.0m	25		200J	A380d
85	RD7.5JSB1(A)	2.5	7.21	400m	5.0m	30	4.4	175J	DO34
86	RD7.5EL		7.21	500m	1.0m	8.0		175J	A277b
87	RD7.5EN		7.21	500m	5.0m	8.0		175J	A277b
88	RD6.8FC	6	7.25	1.0	40m	6.0		175J	A297c
89	RD7.5EB2		7.26	500m	20m	8		175J	A277b
90	RD7.5EL2		7.26	500m	1.0m	8.0		175J	A277b
91	RD7.5EN2		7.26	500m	5.0m	8.0		175J	A277b
92	HZ7.5EB2	2.5	7.26	500m	20m	6.0		175J	DO35
93	BZ073	5	7.3	1.0	30m	6.0	4.5	175J	DO41
94	RD7.5FB2		7.36	1.0	40m	4.0		175J	A277r
95	3KZ8.2	10†	7.38	3.0 §	150m		.06		A3ak§
96	RD7AN		7.4	250m	10m	12		175J	A277b
97	KZ474C	1	7.4	400m§	250u	175	5.5	175A	DO7
98	LVA174C	1	7.4	400m	250u	350	5.5	150A	DO14
99	LVA474C	1	7.4	400m	250u	175	5.5	150A	DO7
100	KZ474B	2	7.4	400m§	250u	175	5.5	175A	DO7
101	LVA174B	2	7.4	400m	250u	350	5.5	150A	DO14
102	LVA474B	2	7.4	400m	250u	175	5.5	150A	DO7
103	HZ7C1	3	7.4	400m	5.0m	15	2.2mV	175J	DO35
104	HZ7C1L	3	7.4	400m	500u	60	3.0	175J	DO35
105	KZ474A	3	7.4	400m§	250u	175	5.5	175A	DO7
106	LVA174A	3	7.4	400m	250u	350	5.5	150A	DO14
107	LVA474A	3	7.4	400m	250u	175	5.5	150A	DO7
108	T-LVA474A	3†	7.4	400m	250u	175	4.0mV	175J	DO35
109	KZ474	5†	7.4	400m		175	4.0	175A	DO7
110	LVA174	6	7.4	400m	250u	350	5.5	150A	DO14
111	LVA474	6	7.4	400m	250u	175	5.5	150A	DO14
112	HZ7HC1	3	7.4	500m	5.0m	15	2.2mV	175J	DO35
113	RD7BN		7.4	1.0	40m	5.0		150J	A427
114	RD7CN		7.4	3.0	120m	3.0		150J	S547
115	HZS7.5JB2	2.5	7.44	400m	5.0m	25		200J	A380d
116	RD7.5JSB2(A)	2.5	7.44	400m	5.0m	30	4.4	175J	DO34
117	BZY88C7V5	5	7.45	400m	5.0m	15	5.6	200J	DO7
118	RD7.5FB	6	7.45	1.0	40m	4.0		175J	A297c
119	RD7.5EL3		7.48	500m	1.0m	8.0		175J	A277b
120	RD7.5EN3		7.48	500m	5.0m	8.0		175J	A277b
121	HZ7.5EB3	2.5	7.48	500m	20m	6.0		175J	DO35

$V_Z \geq 7.5$ V

LINE No.	4 TYPE No.	3 TOL ± (%)	1 NOM. REF. VOLT. (V)	2 PD @ 25°C MAX (W)	TEST CUR. Izt (A)	DYN. IMP. MAX (Ω)	TEMP. COEFF Tc MAX	TEMP MAX (°C)	DWG. NO.
125	TZPD7.5		7.5		5.0m	7.0	5.0		DO35
126	TZPY7.5		7.5		100m	2.0	4.0		DO41
127	1N2043C	5	7.5		1	.80		150A	S19a
128	BZV49C7V5	5	7.5		5.0m	7.0	1.0	150J	M1008
129	CD4737A	5.0	7.5		34m	4.0		200	u52
130	CD5343B	5	7.5		175m	1.5	5.5	200J	u39b
131	MC71	5†	7.5		10m	15			u4b
132	MMBZ5236	5	7.5		20m	6.0			M500
133	NC7V5	5	7.5		5.0m	15	5.0		u48
134▼	TMPZ5236	5.0	7.5		20m	6.0			TO236Ø
135	TSC6088CHIP	5	7.5		1.0m				u46
136	DSZ3007	10	7.5		75m	2.0	4.0		A266
137	BZ7.5	5	7.5	.15	5.0m	35		170A	DO7
138	RD7.5MB		7.5	200m	5.0m	30		150J	M500c
139	RD7.5MB2	3	7.5	200m	5.0m	30		150	
140	BZX84C7V5	5	7.5	200m	5.0m	15	5.0	150J	M500d
141	ESZ7.5	5	7.5	200m	10m	8.0 †			TO106
142	MSZ7.5	5	7.5	200m	5m	10 †			C202
143	CZ7	10	7.5	200m	5.0m				TO106
144	1N711A	5	7.5	250m	25m	5.3	4.8	175A	DO7
145	1N4693	5	7.5	.25	.05m			200A	DO14
146	02Z7.5A	5	7.5	250m	8.0m	15	5.5	175J	DO35
147	BZX58C7V5	5	7.5	250m	10m	7.0	5.0	150A	DO7
148	BZY83C7V5	5	7.5	.25	5.0m	6.0	7	150J	C1g
149	BZY85C7V5	5	7.5	.25 §	5.0m	7.0	7	150J	A171f
150	CLVA75A	5	7.5	250m	1.0m	20 †		175	u20j
151	PD6011,A	5†	7.5	.25	5.0m	7.0		150	A109
152	PD6052	5	7.5	.25	10m	3.0		150	A2c
153	PD6207	5	7.5	250m	1.0m	100		175A	A109
154	1/4M7.5Z10	10†	7.5	250m	8.3m	8.0		175J	E204h
155	1N711	10	7.5	250m	25m	5.3	4.8	175A	DO7
156	BZ147	10	7.5	250m	5.0m	40		125J	M1234
157	1N711B	20	7.5	.25	25m	5.3			DO7
158	PTC504	10	7.5	255m†	34m	4.0			A1bc
159	1S1716		7.5	.30	10m	15		125J	
160	MC6011,A	5†	7.5	.30	10m	15		175	A2m
161	C5D5236	10	7.5	320m	20m			150S	M713a
162	BZX88C7V5	5	7.5	350m	5.0m	15	5.0	175J	A412
163	MA4075	5	7.5	370m	5.0m	15	2.5	200J	DO34
164	MTZ7.5		7.5	400m	20m	10		175J	DO34
165	TZ7.5		7.5	400m	20m	10		175J	DO35
166	1N5527D	1	7.5	400m§	1.0m	35		175A	DO7
167	1N5733D	1	7.5	400m§	10m	10	5.3	200A	DO35
168	1N6088D	1	7.5	400m§	10u	50	6.4	175L	DO7
169	KZ75C	1	7.5	400m§	1.0m	100		175J	DO7
170	LVA75C	1	7.5	400m	1.0m	100		175A	DO7
171	Z5A7.5	1†	7.5	400m§	5.0m	10	7.0	200J	DO7
172	1N5527C	2	7.5	400m§	1.0m	35		175A	DO7
173	1N5733C	2	7.5	400m§	10m	10	5.3	200A	DO35
174	1N6088C	2	7.5	400m§	10u	50	6.4	175L	DO7
175	BZX79B7V5	2	7.5	400m§	5.0m	15	4.0mV	200J	DO35
176	KZ75B	2	7.5	400m§	1.0m	100		175A	DO7
177	LVA75B	2	7.5	400m	1.0m	100		175A	DO7
178	HZ7C2	3	7.5	400m	5.0m	15	2.2mV	175J	DO35
179	HZ7C2L	3	7.5	400m	500u	60	3.0	175J	DO35
180	1N755A	5	7.5	400m	20m	6.0	4.5	175A	A1
181	1N958B	5	7.5	400m	16m	5.5		175S	A398a
182	1N3515	5	7.5	.40	10m	4.0	4.5	200A	DO7
183	1N4100	5	7.5	400m	.25m	200		200J	DO7
184	1N5527B	5	7.5	400m§	1.0m	35		175A	DO7
185	1N5733B	5	7.5	400m§	10m	10	5.3	200A	DO35
186	1N6088B	5	7.5	400m§	10u	50	6.4	175L	DO7
187	1S2075A	5	7.5	.40	5.0m	15	5.0	150A	A1
188	1S7075,B	5†	7.5	.40	5.0m	15	5.0	150A	A1
189	1S7075A	5	7.5	.40	5.0m	15	5.0	150A	A1
190	BZX79C7V5	5	7.5	400m§	5.0m	15	4.0mV	200J	DO35
191	BZX96C7V5	5	7.5	400m	5.0m	7.0	4.5	150J	DO7
192	CD755A	5	7.5	400m	20m	6.0	5.7	200J	u39a
193	CD4100	5	7.5	400m	250u	200	4.5	200J	u39a
194	CD5236B	5	7.5	400m	20m	6.0	5.8	200J	u39a
195	CH755	5	7.5	400m	20m	4.0	5.8	200J	u10
196	CH4100	5	7.5	400m	250u	200	6.5	200J	u10
197	CH5236	5	7.5	400m	20m	6.0	5.8	200J	u10
198	GSZ7.5A	5	7.5	400m	20m	10			A69a
199	KZ75A	5	7.5	400m§	1.0m	100		175A	DO7
200	KZ375A	5†	7.5	400m	1.0m	50		175A	DO7
201	LVA75A	5	7.5	400m	1.0m	100		175A	DO7
202	MA1075	5	7.5	400m	5.0m	15	2.5	200J	A24d
203	RD7.5JB	5	7.5	400m	5.0m	30		175J	DO35
204	RD7.5JSB(A)	5.0	7.5	400m	5.0m	30	4.4	175J	DO34

SYMBOLS AND CODES EXPLAINED IN INTERPRETER

2. VOLTAGE REFERENCE DIODES - $V_Z \geq 7.5$ V (Cont'd)

IN ORDER OF: (1) REF. VOLTAGE (2) PD MAX (3) TOLERANCE & (4) TYPE NUMBER

LINE No.	4 TYPE No.	3 TOL ± (%)	1 NOM. REF. VOLT. (V)	2 PD @ 25°C MAX (W)	TEST CUR. Izt (A)	DYN. IMP. MAX (Ω)	TEMP. COEFF Tc MAX	TEMP MAX (°C)	DWG. NO.
1	T-LVA75A	5†	7.5	400m	1.0m	100		175J	DO35
2	T-LVA375A	5†	7.5	400m	1.0m	50		175J	DO35
3	Z5B7.5	5†	7.5	400m§	5.0m	10	7.0	200J	DO7
4	ZMM755A	5.0	7.5	400m§	20m	6.2	4.5	175J	F139
5	1N755	10	7.5	400m	20m	6.0	4.5	175A	A1
6	1N958A	10	7.5	400m	16m	5.5		175S	A398a
7	1N5527A	10	7.5	400m§	1.0m			175A	DO7
8	1N6088A	10	7.5	400m§	10u	50	6.4	175L	DO7
9	1S2075	10	7.5	.40	5.0m	15	5.0	150A	A1
10	GSZ7.5	10	7.5	400m	20m	10			A69a
11	ZMM755	10	7.5	400m§	20m	6.0	4.5	175J	F139
12	1N958	20	7.5	400m	16m	5.5		175S	A398a
13	1N5527	20	7.5	400m§	1.0m			175A	DO7
14	1N6088	20	7.5	400m§	10u	50	6.4	175L	DO7
15	GZA7.5		7.5	500m		8.0 †	7.0		A159
16	1N5997D	1	7.5	500m	5.0m	7.0		200J	DO35
17	Z0A7.5	1†	7.5	500m	5.0m	4.0 †	7.0	200J	DO29
18	1N5997C	2	7.5	500m	5.0m	7.0		200J	DO35
19	HZ7HC2	3	7.5	500m	5.0m	15	2.2mV	175J	DO35
20	1N5236B	5	7.5	500m	20m	4.0	5.8	200A	A398a
21	1N5852B	5	7.5	500m	20m	23		150C	M859
22	1N5997B	5	7.5	500m	50m	7.0		200J	DO35
23	BZX46C7V5	5	7.5	500m	16m	5.5	9.0	175A	DO35
24	BZX55C7V5	5	7.5	500m	5.0m	7.0	5.0	175A	DO35
25	BZX83C7V5	5	7.5	500m	5.0m	7.0	5.0	175A	DO35
26	CD75	5	7.5	500m	1.0m	50		200J	DO7
27	CTZ7.5A	5	7.5	500m	10m	40	450	200	DO35
28	MA3075L	5.0	7.5	500m	5.0m	15	2.5	125J	M990
29	MA5075	5	7.5	500m	5.0m	15	2.5	125J	M990
30	MLL5236B	5.0	7.5	500m§	20m	6.0	5.8	200J	F140
31	MTZ611,A	5†	7.5	.50	10m	15		175A	A60e
32	PS8910	5	7.5	.50	20m	2.0	5.5	150	A60p
33	RD7.5EB	5	7.5	500m	20m	10	5.0	175J	DO35
34	TS07500	5	7.5	500m	1.0u			200J	DO35
35	Z0B7.5	5†	7.5	500m	5.0m	4.0 †	7.0	200J	DO29
36	ZMM7.5	5†	7.5	500m	5.0m	7.0	5.0	175J	F135
37	ZMM5236B	5.0	7.5	500m§	20m	6.0	5.8	200J	F139
38	ZPD7V5	5†	7.5	500m	5.0m	50	3.8mV	175J	DO35
39	ZPD7.5	5	7.5	500m	5.0m	7.0	5.0	175J	DO35
40	05Z7.5	6.0	7.5	500m	5.0m	15	5.5	175J	DO35
41	BZX97C7V5	7	7.5	500m	5.0m	7.0	5.0	175J	DO35
42	BZV55C7V5	7.1	7.5	500m	5.0m	15	4.0	200J	F139
43	BZV60C7V5	7.1	7.5	500m	5.0m	15	4.0	200J	DO34
44	1N3413	10	7.5	.50	1.0m	150	1.0	200A	P5
45	1N5236A	10	7.5	500m	20m	4.0	5.8	200A	A398a
46	1N5852A	10	7.5	500m	20m	23		150C	M859
47	1N5997A	10	7.5	500m	5.0m	10		200J	DO35
48	CTZ7.5	10	7.5	500m	10m	40	450	200	DO35
49	CV7	10	7.5	500m	5.0m				TO105
50	EQA01-08R	10	7.5	500m	15m	8.0	.05	125J	A387
51	MLL5236A	10	7.5	500m§	20m	6.0	5.8	200J	F140
52	ZMM5236A	10	7.5	500m§	20m	6.0	5.8	200J	F139
53	1N5236	20†	7.5	.50	20m			200A	A398a
54	1N5997	20	7.5	500m	5.0m	10		200J	DO35
55	MLL5236	20	7.5	500m§	20m	6.0		200J	F140
56	ZMM5236	20	7.5	500m§	20m	6.0	5.8	200J	F139
57	LVA375C	1	7.5	600m	1.0m	50		175A	DO14
58	LNA375B	2	7.5	600m	1.0m	50		175A	DO7
59	LVA375B	2	7.5	600m	1.0m	50		175A	DO14
60	1N4629	5	7.5	.60	17m	700	6.6	200A	DO14
61	GLA75,A,B	5†	7.5	600m	1.0m	50	5.5	175	DO7
62	LNA375A	5	7.5	600m	1.0m	50		175A	DO7
63	LVA375A	5	7.5	600m	1.0m	50		175A	DO14
64	LNA375	10	7.5	600m	1.0m	50		175A	DO7
65	MLNA375B	2	7.5	750m	1.0m	50		175A	A249e
66	1N3676B	5	7.5	750m§	17m	5.5		175S	A1az
67	BZV41C7V5	5	7.5	750m	5.0m	15	5.0	175S	A412
68	MC6111,A	5†	7.5	.75	25m	15		175A	A2d
69	MGLA75,A,B	5†	7.5	750m	1.0m	50	5.5	175A	A249e
70	MLNA375A	5	7.5	750m	1.0m	50		175A	A249e
71	MLV755A	5	7.5	750m	20m	4.0		175A	A2j
72	TSZ7.5	5	7.5	750m	10m	12			TO39
73	1N3676A	10	7.5	750m§	17m	5.5		175S	A1az
74	MLNA375	10	7.5	750m	1.0m	50		175A	A249e
75	1N3676	20	7.5	750m§	17m	5.5		175S	A1az
76	HZ7.5PB		7.5	800m	40m	4.0		175J	DO41
77	AP7.5A,B		7.5	1.0 †	20m	10			DO35
78	DZB7.5		7.5	1.0	10m	30	4.0mV	150J	A298ap
79	GZB7.5		7.5	1.0	10m	30	4.0mV	150J	A298ap
80	GZB7.5C		7.5	1.0		30	4.0mV		A298ap
81	MA2075		7.5	1.0	40m	5.0	3.8	200J	A277r
82	TSC4737CHIP								
			7.5	1.0	34m	4.0			u46
83	LVA1075C	1	7.5	1.0	1.0m	100		175	A266c
84	Z4A7.5	1†	7.5	1.0	50m	1.0	5.0	200J	DO29
85	LVA1075B	2	7.5	1.0	1.0m	100		175	A266c
86	SZ7.5	2†	7.5	1.0	20m	1.5 †	4.4	150A	A3g
87	1N1768A	5	7.5	1.0	100m	2.1		175A	DO13Ø
88	1N3017B	5	7.5	1.0	34m	4.0		175A	A31a
89	1N3830A	5	7.5	1.0	34m	1.5	4.5	175A	A31a
90	1N4159B	5	7.5	1.0 §	34m	4.0		200S	DO29
91	1N4324B	5	7.5	1.0	34m	4.0	4.5	300S	DO7
92	1N4401B	5	7.5	1.0	34m	2.0	4.5	175A	A1cm
93	1N4658	5	7.5	1.0	34m	200	6.1	200A	DO15
94	1N4737A	5	7.5	1.0	34m	4.0		200A	DO41
95	1N5560B	5	7.5	1.0 §	34m	4.0		200A	A60ac
96	APD7.5A,B	5†	7.5	1.0 †	34m	10			A1rx
97	BZ075	5	7.5	1.0	30m	6.0	4.7	175J	A60t
98	BZV85C7V5	5	7.5	1.0	35m	3.0	4.0mV	200J	DO41
99	BZX78C7V5	5	7.5	1.0	20m	3.0	3.8mV	200J	
100	BZX85C7V5	5	7.5	1.0 §	35m	3.0	6.5	150A	DO41
101	CD4737	5	7.5	1.0	34m	4.0	5.7	200J	u39a
102	CH4737	5	7.5	1.0	34m	4.0	5.7	200J	u10
103	CZ7.5,A,B,D								
		5†	7.5	1.0	40m	12	4.5	175	DO15
104	LVA1075A	5	7.5	1.0	1.0m	100		175	A266c
105	PL7V5Z	5	7.5	1.0	100m	2.0	4.8	150J	
106	PR237-RT	5	7.5	1.0	30m	6.0 †			DO7
107	PS10017B	5	7.5	1.0	34m	4.0		175A	A60p
108	PS10061	5	7.5	1.0	34m	2.0	6.1	150	A60p
109	RD7.5P	5.0	7.5	1.0	5.0m	15	4.4	150J	M1008
110	TZB7.5B	5	7.5	1.0 §	10m		6.1	175A	A1ty
111	UZ8707	5	7.5	1.0	34m	4.0	4.0	175	A380
112	VR7.5,A,B	5†	7.5	1.0	34m	4.0		125A	A1b
113	Z4B7.5	5†	7.5	1.0	50m	1.0	5.0	200J	DO29
114	Z7.5	5†	7.5	1.0	20m	1.2 †	5.0	150A	DO41
115	ZB7.5	5†	7.5	1.0 §	34m	4.0		150A	A1bc
116	ZM4737A	5.0	7.5	1.0 §	34m	4.0		200J	F139
117	AW08-7.5B	5.6	7.5	1.0	25m	3.0	4.0	175J	A60au
118	AW08-7.5A	8.6	7.5	1.0	25m	3.0	4.0	175J	A60au
119	1N1768	10	7.5	1.0	100m	2.1		175A	DO13Ø
120	1N3017A	10	7.5	1.0	34m	4.0		175A	A31a
121	1N3830	10	7.5	1.0	34m	1.5	4.5	175A	A31a
122	1N4159A	10	7.5	1.0 §	34m	4.0		200S	DO29
123	1N4324A	10	7.5	1.0	34m	4.0	4.5	300S	DO7
124	1N4401A	10	7.5	1.0	34m	2.0	4.5	175A	A1cm
125	1N4737	10	7.5	1.0	34m	4.0		200A	DO41
126	1N5560A	10	7.5	1.0 §	34m	4.0		200A	A60ac
127	1S223	10	7.5	1.0	35m	3.0	4.0	150J	A56a
128	1Z7.5	10	7.5	1.0	10m	30	5.3	150J	DO15
129	TZB7.5A	10	7.5	1.0 §	10m		6.1	175A	A1ty
130	UZ8807	10	7.5	1.0	34m	4.0	4.0	175	A380
131	ZB7.5A	10	7.5	1.0	34m	4.0		100C	A1bc
132	ZM4737	10	7.5	1.0 §	34m	4.0		200J	F139
133	ZB7.5B	15	7.5	1.0	34m	4.0		100C	A1bc
134	1N3017	20	7.5	1.0	34m	4.0		175A	A31a
135	1N4159	20	7.5	1.0 §	34m	4.0		200S	DO29
136	1N4324	20	7.5	1.0	34m	4.0	4.5	300S	DO7
137	1N4401	20	7.5	1.0	34m	2.0		175S	A266a
138	1N5560	20	7.5	1.0 §	34m			200A	A60ac
139	BZX61C7V5	5	7.5	1.3	20m	6.0	4.0	175J	DO15
140	BZX87C7V5	5	7.5	1.3	20m	3.0	5.3	200J	A60al
141	BZY97C7V5	5	7.5	1.3	100m	2.0	7.0		A1rx
142	ZD7.5	5	7.5	1.3	100	2.0	4.0	150J	DO13
143	ZY7.5	5	7.5	1.3	100m	2.0	7.0	150J	A1bg
144	ZMY7.5	6	7.5	1.3	100m	2.0	3.5	200J	F149
145	BZD10C7V5	7	7.5	1.3	100m	2.0	7.0		DO13
146	BZW22C7V5	7	7.5	1.3	100m	2.0	7.0		DO41
147	ZPY7.5	12	7.5	1.3	100m	2.0	7.0	200J	DO41
148	1N5922D	1	7.5	1.5	50m	3.0		200J	DO41
149	1N5922C	2	7.5	1.5	50m	3.0		200J	DO41
150	1N3786B	5	7.5	1.5	50m	3.0	6.1	175S	C14Ø
151	1N4462	5	7.5	1.5	34m	2.5		175A	A60y
152	1N5922B	5	7.5	1.5	50m	3.0		200J	DO41
153	1S4007,A	5†	7.5	1.5	50m	1.2	4.5	150A	DO1
154	BZY96C7V5	5	7.5	1.5	50m	3.5	5.3	175J	DO1
155	MC6311,A	5†	7.5	1.5	100m	14			A1q
156	1N3786A	10	7.5	1.5	50m	3.0	6.1	175S	C14Ø
157	1N5922A	10	7.5	1.5	50m	3.0		200J	DO41
158	1N3786	20	7.5	1.5	50m	3.0	6.1	175S	C14Ø
159	1N5922	20	7.5	1.5	50m	3.0		200J	DO41
160	2EZ7.5D5	5	7.5	2.0	66m	2.0		200J	A1ay
161	2VR7.5,A,B	5†	7.5	2.0	67m	3.0			A3e
162	BZV47C7V5	5	7.5	2.0	100m	2.0	4.5	175J	A344r
163	LMZ7.5A	5	7.5	2.0	66m	5.5	6.1	150A	DO41
164	ZBC7.5	5†	7.5	2.0 §	68m	2.0		150A	A1bc
165	ZBC7.5B	5	7.5	2.0	68m	2.0			A1ty
166	2EZ7.5D10	10	7.5	2.0	66m	2.0		200J	A1ay
167	LMZ7.5	10	7.5	2.0	66m	5.5	6.1	150A	DO41
168	ZBC7.5A	10	7.5	2.0	68m	2.0			A1ty
169	2EZ7.5D	20	7.5	2.0	66m	2.0		200J	A1ay
170	1N5017A	5	7.5	2.5	83m	1.8	4.5	150	A1gn
171	BZX70C7V5	5	7.5	2.5	50m	3.5	3.0mV	150J	A171b
172	Z2B7.5	5†	7.5	2.5	50m	2.0	5.0	200J	DO1
173	1N5017	10	7.5	2.5	83m	1.8	4.5	150	A1gn
174	3EZ7.5D1	1.0	7.5	3.0	100m	2.0		150J	A1ay
175	3EZ7.5D2	2.0	7.5	3.0	100m	2.0		150J	A1ay
176	3EZ7.5D3	3.0	7.5	3.0	100m	2.0		150J	A1ay
177	3EZ7.5D4	4.0	7.5	3.0	100	2.0		150J	A1ay
178	1N5064	5	7.5	3.0	75m	2.0		175A	A146u
179	3EZ7.5D5	5	7.5	3.0	100m	2.0		200J	A1ay
180	3VR7.5,A,B	5†	7.5	3.0	.10	2.0			A3al
181	BZV16C7V5	5	7.5	3.0	68m	4.0	4.5	175	DO3
182	MZ707	5	7.5	3.0	75m	2.0	4.0	175A	A146j
183	UDZ707	5	7.5	3.0	75m	3.0		175A	A356a
184	UZ707	5	7.5	3.0	75m	2.0	4.0	175A	A380
185	ZCC7.5	5†	7.5	3.0 §	75m	2.0		150A	A1ey
186	ZCC7.5B	5	7.5	3.0	75m	2.0			A1ey
187	3EZ7.5D10	10	7.5	3.0	100m	2.0		200J	A1ay
188	MZ807	10	7.5	3.0	75m	2.0	4.0	175A	A146j
189	UZ807	10	7.5	3.0	75m	2.0	4.0	175A	A380
190	ZCC7.5A	10	7.5	3.0	75m	2.0			A1ey
191	3EZ7.5D	20	7.5	3.0	100m	2.0		200J	A1ay
192	MZ907	20	7.5	3.0	75m	2.0	4.0	175A	A146j
193	UZ907	20	7.5	3.0	75m	2.0	4.0	175A	A380
194	3T7.5,A,B	5†	7.5	3.5	100m	2.1			DO4
195	RD7.5FB3		7.59	1.0	40m	4.0		175J	A277r
196	MC6408A	5†	7.65	.25	7.5m	15	1.0	75R	F133e
197	MC6408B	5†	7.65	.25	7.5m	15	1.0	75R	A188
198	MC6409A	5†	7.65	.25	7.5m	15	1.0	100R	F133e
199	MC6409B	5†	7.65	.25	7.5m	15	1.0	100R	A188
200	MC6410A	5†	7.65	.25	7.5m	15	.50	75R	F133e
201	MC6410B	5†	7.65	.25	7.5m	15	.50	75R	A188
202	MC6411A	5†	7.65	.25	7.5m	15	.50	100R	F133e
203	MC6411B	5†	7.65	.25	7.5m	15	.50	100R	A188
204	MC6412A	5†	7.65	.25	7.5m	15	.20	75R	F133e
205	MC6412B	5†	7.65	.25	7.5m	15	.20	75R	A188
206	MC6413A	5†	7.65	.25	7.5m	15	.20	100R	F133e
207	MC6413B	5†	7.65	.25	7.5m	15	.20	100R	A188
208	MC6414A	5†	7.65	.25	7.5m	15	.10	75R	F133e
209	MC6414B	5†	7.65	.25	7.5m	15	.10	75R	A188
210	MC6415A	5†	7.65	.25	7.5m	15	.10	100R	F133e
211	MC6415B	5†	7.65	.25	7.5m	15	.10	100R	A188
212	MC6426A	5†	7.65	.25	7.5m	15	.05	75R	F133e
213	MC6426B	5†	7.65	.25	7.5m	15	.10	75R	A188
214	MC6427A	5†	7.65	.25	7.5m	15	.05	100R	F133e
215	MC6427B	5†	7.65	.25	7.5m	15	.10	100R	A188
216	MC6408C	5†	7.65	.40	7.5m	15	1.0	75R	A1as
217	MC6409C	5†	7.65	.40	7.5m	15	1.0	100R	A1as
218	MC6410C	5†	7.65	.40	7.5m	15	.50	75R	A1as

SYMBOLS AND CODES EXPLAINED IN INTERPRETER

2. VOLTAGE REFERENCE DIODES - $V_Z \geq 7.5$ V (Cont'd)

IN ORDER OF: (1) REF. VOLTAGE (2) PD MAX (3) TOLERANCE & (4) TYPE NUMBER

LINE No.	4 TYPE No.	3 TOL ± (%)	1 NOM. REF. VOLT. (V)	2 PD @ 25°C MAX (W)	TEST CUR. Izt (A)	DYN. IMP. MAX (Ω)	TEMP. COEFF Tc MAX	TEMP MAX (°C)	DWG. NO.
1	MC6411C	5†	7.65	.40	7.5m	15	.50	100R	A1as
2	MC6412C	5†	7.65	.40	7.5m	15	.20	75R	A1as
3	MC6413C	5†	7.65	.40	7.5m	15	.20	100R	A1as
4	MC6414C	5†	7.65	.40	7.5m	15	.10	75R	A1as
5	MC6415C	5†	7.65	.40	7.5m	15	.10	100R	A1as
6	MC6426C	5†	7.65	400m	7.5m	15	50m	75R	A1as
7	MC6427C	5†	7.65	400m	7.5m	15	50m	100R	A1as
8	HZS7.5JB3	2.5	7.68	400m	5.0m	25		200J	A380d
9	RD7.5JSB3(A)								
		2.5	7.68	400m	5.0m	30	4.4	175J	DO34
10	RD7.5MB3	3	7.7	200m	5.0m	30		150	
11	KZ477C	1	7.7	400m§	250u	175	5.8	175A	DO7
12	LVA177C	1	7.7	400m	250u	350	5.8	150A	DO14
13	LVA477C	1	7.7	400m	250u	175	5.8	150A	DO7
14	KZ477B	2	7.7	400m§	250u	175	5.8	175A	DO7
15	LVA177B	2	7.7	400m	250u	350	5.8	150A	DO14
16	LVA477B	2	7.7	400m	250u	175	5.8	150A	DO7
17	HZ7C3	3	7.7	400m	5.0m	15	2.2mV	175J	DO35
18	HZ7C3L	3	7.7	400m	500u	60	3.2	175J	DO35
19	KZ477A	3	7.7	400m§	250u	175	5.8	175A	DO7
20	LVA177A	3	7.7	400m	250u	350	5.8	150A	DO14
21	LVA477A	3	7.7	400m	250u	175	5.8	150A	DO7
22	T-LVA477A	3†	7.7	400m	250u	175	4.4mV	175J	DO35
23	KZ477	5†	7.7	400m		175	4.4	175A	DO7
24	LVA177	6	7.7	400m	250u	350	5.8	150A	DO14
25	LVA477	6	7.7	400m	250u	175	5.8	150A	DO14
26	HZ7HC3	3	7.7	500m	5.0m	15	2.2mV	175J	DO35
27▼	SZ.5-7.7-5-25								
		5.0	7.7	500m	25m			175	u5a
28	EQA02-08AB	8	7.7	500m	20m	10	.05	175J	A1ac
29▼	SZ.5-7.7-10-25								
		10	7.7	500m	25m			175	u5a
30▼	SZ.5-7.7-20-25								
		20	7.7	500m	25m			175	u5a
31	BZ077	5	7.7	1.0	30m	6.0	4.8	175J	DO41
32▼	SZ1-7.7-5-25								
		5.0	7.7	1.0	25m			175	u5b
33▼	SZ1-7.7-10-25								
		10	7.7	1.0	25m			175	u5b
34▼	SZ1-7.7-20-25								
		20	7.7	1.0	25m			175	u5b
35▼	SZ3-7.7-5-25								
		5.0	7.7	5.0	25m			175	u5c
36▼	SZ3-7.7-10-25								
		10	7.7	5.0	25m			175	u5c
37▼	SZ3-7.7-20-25								
		20	7.7	5.0	25m			175	u5c
38	RD8.2EB1		7.72	500m	20m	8		175J	A277b
39	RD8.2EL1		7.72	500m	1.0m	8.0		175J	A277b
40	RD8.2EN1		7.72	500m	5.0m	8.0		175J	A277b
41	HZ8.2EB1	2.4	7.73	500m	20m	6.0		175J	DO35
42	D814A	10	7.75	340m	5.0m	15 †	7.0	100C	A378
43	STB12*	10	7.8		10m			175A	A1fg
44	EQA01-08	16	7.8	500m	15m	8.0	.05	125J	A387
45	RD8.2FB1		7.80	1.0	40m	4.0		175J	A277r
46	EQB01-08	16	7.8	1.0	30m	5.0	.05	140J	A21b
47	HZ9A1	3	7.9	400m	5.0m	20	4.2mV	175J	DO35
48	HZ9A1L	3	7.9	400m	500u	60	3.2	175J	DO35
49	HZ9HA1	3	7.9	500m	5.0m	20	4.2mV	175J	DO35
50	RD7.5EC	5	7.9	500m	20m	10	5.4	175J	DO35
51	HZ7.5PC		7.9	800m	40m	4.0		175J	DO41
52	BZ079	5	7.9	1.0	30m	6.0	5.0	175J	DO41
53	HZS8.2JB1	2.4	7.93	400m	5.0m	25		200J	A380d
54	RD8.2JSB1(A)								
		2.5	7.93	400m	5.0m	30	5.0	175J	DO34
55	RD7.5FC	5	7.95	1.0	40m	4.0		175J	A297c
56	RD8.2EB2		7.98	500m	20m	8		175J	A277b
57	RD8.2EL2		7.98	500m	1.0m	8.0		175J	A277b
58	RD8.2EN2		7.98	500m	5.0m	8.0		175J	A277b
59	RD8.2EL		7.99	500m	1.0m	8.0		175J	A277b
60	RD8.2EN		7.99	500m	5.0m	8.0		175J	A277b
61	HZ8.2EB2	2.5	7.99	500m	20m	6.0		175J	DO35
62	1N2044A	5	8.0		1	.80		150A	S19a
63	RD8.2MB1	3	8.0	200m	5.0m	30		150	
64	RD9AL		8.0	250m	10m	10		175J	A277b
65	SZ8	8	8.0	.25	5.0m	15	.68	150J	C1f
66	KZ480C	1	8.0	400m§	250u	175	6.0	175A	DO7
67	LVA180C	1	8.0	400m	250u	350	6.0	150A	DO14
68	LVA480C	1	8.0	400m	250u	175	6.0	150A	DO7
69	KZ480B	2	8.0	400m§	250u	175	6.0	175A	DO7
70	LVA180B	2	8.0	400m	250u	350	6.0	150A	DO14
71	LVA480B	2	8.0	400m	250u	175	6.0	150A	DO7
72	KZ480A	3	8.0	400m§	250u	175	6.0	175A	DO7
73	LVA180A	3	8.0	400m	250u	350	6.0	150A	DO14
74	LVA480A	3	8.0	400m	250u	175	6.0	150A	DO7
75	T-LVA480A	3†	8.0	400m	250u	175	4.8mV	175J	DO35
76	KZ480	5†	8.0	400m		175	4.8	175A	DO7
77	MZL308	5	8.0	400m	500u	60	5.2	175J	DO35
78	LVA180	6	8.0	400m	250u	350	6.0	150A	DO14
79	LVA480	6	8.0	400m	250u	175	6.0	150A	DO14
80	MZ308,A,B,C								
		5	8.0	500m	10m	10	5.0	175J	DO35
81	EQA01-08S	10	8.0	500m	15m	8.0	.05	125J	A387
82	1N2035A	5	8.0	.75	10m	15	6.0	150J	DO12
83	RD9BL		8.0	1.0	40m	5.0		150J	A427
84	MZ408,A,B,C								
		5	8.0	1.0	20	7.0	5.0	175J	DO41
85	SZL8	8	8.0	1.3	50m	3.5		150J	S442
86	RD9CL		8.0	3.0	120m	3.0		150J	S547
87	RD8.2FB2		8.07	1.0	40m	4.0		175J	A277r
88	BZX85C8V1		8.1		25m	5.0			D041
89	HZ9A2	2	8.1	400m	5.0m	20	4.2mV	175J	DO35
90	HZ9A2L	2	8.1	400m	500u	60	3.5	175J	DO35
91	BZY88C8V2	5	8.1	400m	5.0m	20	6.0	200J	DO7
92	HZ9HA2	2	8.1	500m	5.0m	20	4.2mV	175J	DO35
93	EQA02-08CD	8	8.1	500m	20m	10	.05	175J	A1ac
94	BZ081	5	8.1	1.0	30m	6.0	5.0	175J	A60t
95	HZS8.2JB2	2.4	8.19	400m	5.0m	25		200J	A380d
96	RD8.2JSB2(A)								
		2.5	8.19	400m	5.0m	30	5.0	175J	DO34
97	3KZ9.1	10†	8.19	3.0 §	150m		.06		A3ak§
98	TZPD8.2		8.2		5.0m	7.0	6.0		DO35
99	TZPY8.2		8.2		100m	2.0	6.0		DO41
100	BZV49C8V2	5	8.2		5.0m	7.0	1.0	150J	M1008
101♦	BZX78C8V2	5	8.2			4.0		200J	
102	CD4738A	5.0	8.2		31m	4.5		200	u52
103	CD5344B	5	8.2		150m	1.5	5.9	200J	u39b
104	MMBZ5237	5	8.2		20m	8.0			M500
105	NC8V2	5	8.2		5.0m	15	5.5		u47
106▼	TMPZ5237	5.0	8.2		20m	8.0			TO236⊠
107	TSC6089CHIP								
		5	8.2		1.0m				u46
108	BZX55D8V2	10	8.2		5.0m	10			A1ct
109	DSZ3008	10	8.2		75m	3.0	5.0		A266
110	1N1985B	1	8.2	150m	5.0m	15	6.0	150	C1
111	1N1985A	5	8.2	150m	5.0m	15	6.0	150	C1
112	BZ8.2	5	8.2	.15	5.0m	50		170A	DO7
113	MA3082	5.0	8.2	150m	5.0m	15	3.2	125J	M713b
114	1N1985	10	8.2	150m	5.0m	15	6.0	150	C1
115	RD8.2MB		8.2	200m	5.0m	30		150J	M500c
116	1N1931B	1	8.2	200m	5.0m	15	6.0	150A	A82e
117	RD8.2MB2	3	8.2	200m	5.0m	30		150	
118	1N1931A	5	8.2	200m	5.0m	15	6.0	150A	A82e
119	BZX84C8V2	5	8.2	200m	5.0m	15	6.0	150J	M500d
120	ESZ8.2	5	8.2	200m	10m	8.0 †			TO106
121	MSZ8.2	5	8.2	200m	5m	10 †			C202
122	1N1931	10	8.2	200m	5.0m	15	6.0	150A	A82e
123	CZ8	10	8.2	200m	5.0m				TO106
124	1S2190	3	8.2	250m	10m	20	1.0	75A	C29p
125	1S2191	3	8.2	250m	10m	20	500m	75A	C29p
126	1S2192	3	8.2	250m	10m	20	200m	75A	C29p
127	1N712A	5	8.2	250m	25m	6.0	5.3	175A	DO7
128	1N4694	5	8.2	.25	.05m			200A	DO14
129	02Z8.2A	5	8.2	250m	8.0m	20	6.0	175J	DO35
130	BZX58C8V2	5	8.2	250m	10m	7.0	6.0	150A	DO7
131	BZY83C8V2	5	8.2	.25	5.0m	7.0	7	150J	C1g
132	CLVA82A	5	8.2	250m	1.0m	25 †		175	u20j
133	PD6012,A	5†	8.2	.25	5.0m	8.0		150	A109
134	PD6053	5	8.2	.25	5.0m	5.0		150	A2c
135	PD6208	5	8.2	250m	1.0m	100		175A	A109
136	1/4M8.2Z10	10†	8.2	250m	7.6m	9.0		175J	E204h
137	1N712	10	8.2	250m	25m	6.0	5.3	175A	DO7
138	BZ148	10	8.2	250m	5.0m	40		125J	M1234
139	BZY83D8V2	10	8.2	.25	5.0m	10	8	150J	C1g
140	1N712B	20	8.2	.25	25m	6.0			DO7
141	MC6012,A	5†	8.2	.30	10m	16		175	A2m
142	C5D5237	10	8.2	320m	20m			150S	M713a
143	BZX88C8V2	5	8.2	350m	5.0m	15	5.5	175J	A412
144	MA4082	5	8.2	370m	5.0m	15	3.2	200J	DO34
145	MTZ8.2		8.2	400m	20m	10		175J	DO34
146	TZ8.2		8.2	400m	20m	10		175J	DO35
147	1N5528D	1	8.2	400m§	1.0m	40		175A	DO7
148	1N5734D	1	8.2	400m§	10m	15	6.1	200A	DO35
149	1N6089D	1	8.2	400m§	10u	60	6.7	175L	DO7
150	KZ82C	1	8.2	400m§	1.0m	100		175J	DO7
151	LVA82C	1	8.2	400m	1.0m	100		175A	DO7
152	Z5A8.2	1†	8.2	400m§	5.0m	15	8.0	200J	DO7
153	1N5528C	2	8.2	400m§	1.0m	40		175A	DO7
154	1N5734C	2	8.2	400m§	10m	15	6.1	200A	DO35
155	1N6089C	2	8.2	400m§	10u	60	6.7	175L	DO7
156	BZX79B8V2	2	8.2	400m§	5.0m	15	4.6mV	200J	DO35
157	KZ82B	2	8.2	400m§	1.0m	100		175A	DO7
158	LVA82B	2	8.2	400m	1.0m	100		175A	DO7
159	1N664	5	8.2	.40	10m	7.0	5.0	200S	A31b
160	1N756A	5	8.2	400m	20m	8.0	5.2	175A	A1
161	1N959B	5	8.2	400m	15m	6.5	4.8	175S	A398a
162	1N3516	5	8.2	.40	10m	5.0	5.2	200A	DO7
163	1N4101	5	8.2	400m	.25m	200		200J	DO7
164	1N5528B	5	8.2	400m§	1.0m	40		175A	DO7
165	1N5734B	5	8.2	400m§	10m	15	6.1	200A	DO35
166	1N6089B	5	8.2	400m§	10u	60	6.7	175L	DO7
167	1S2082A	5	8.2	.40	5.0m	15	6.0	150A	A1
168	1S7082,A,B	5†	8.2	.40	5.0m	15	6.0	150A	A1
169	BZX79C8V2	5	8.2	400m§	5.0m	15	4.6mV	200J	DO35
170	BZX96C8V2	5	8.2	400m	5.0m	7.0	4.8	150J	DO7
171	CD756A	5	8.2	400m	20m	8.0	6.0	200J	u39a
172	CD4101	5	8.2	400m	250u	200	4.8	200J	u39a
173	CD5237B	5	8.2	400m	20m	8.0	6.2	200J	u39a
174	CH756	5	8.2	400m	20m	5.0	6.2	200J	u10
175	CH4101	5	8.2	400m	250u	200	7.0	200J	u10
176	CH5237	5	8.2	400m	20m	8.0	6.2	200J	u10
177	GSZ8.2A	5	8.2	400m	20m	10			A69a
178	KZ82A	5	8.2	400m§	1.0m	100		175A	DO7
179	KZ382A	5†	8.2	400m	1.0m	60		175A	DO7
180	LVA82A	5	8.2	400m	1.0m	100		175A	DO7
181	MA1082	5	8.2	400m	5.0m	15	3.2	200J	A24d
182	RD8.2JB	5	8.2	400m	5.0m	30		175J	DO35
183	RD8.2JSB(A)								
		5.0	8.2	400m	5.0m	30	5.0	175J	DO34
184	T-LVA82A	5†	8.2	400m	1.0m	100		175J	DO35
185	T-LVA382A	5†	8.2	400m	1.0m	60		175J	DO35
186	Z5B8.2	5†	8.2	400m§	5.0m	15	8.0	200J	DO7
187	ZMM756A	5.0	8.2	400m§	20m	8.0	5.2	175J	F139
188	1N756	10	8.2	400m	20m	8.0	5.2	175A	A1
189	1N959A	10	8.2	400m	15m	6.5	4.8	175S	A398a
190	1N5528A	10	8.2	400m§	1.0m			175A	DO7
191	1N6089A	10	8.2	400m§	10u	60	6.7	175L	DO7
192	1S2082	10	8.2	.40	5.0m	15	6.0	150A	A1
193	BZY85D8V2	10	8.2	400m	5.0m	8.0	4.7	150J	A1su
194	GSZ8.2	10	8.2	400m	20m	10			A69a
195	ZMM756	10	8.2	400m§	20m	8.0	5.2	175J	F139
196	1N959	20	8.2	400m	15m	6.5	4.8	175S	A398a
197	1N5528	20	8.2	400m§	1.0m			175A	DO7
198	1N6089	20	8.2	400m§	10u	60	6.7	175L	DO7
199	GZA8.2		8.2	500m		10 †	7.7		A159
200	1N5998D	1	8.2	500m	5.0m	7.0		200J	DO35
201	Z0A8.2	1†	8.2	500m	5.0m	6.0 †	8.0	200J	DO29
202	1N5998C	2	8.2	500m	5.0m	7.0		200J	DO35
203	1N5237B	5	8.2	500m	20m	5.0	6.2	200A	A398a
204	1N5853B	5	8.2	500m	20m	34		150C	M859

SYMBOLS AND CODES EXPLAINED IN INTERPRETER

2. VOLTAGE REFERENCE DIODES - $V_Z \geq 7.5$ V (Cont'd)

IN ORDER OF: (1) REF. VOLTAGE (2) PD MAX (3) TOLERANCE & (4) TYPE NUMBER

LINE No.	4 TYPE No.	3 TOL ± (%)	1 NOM. REF. VOLT. (V)	2 PD @ 25°C MAX (W)	TEST CUR. Izt (A)	DYN. IMP. MAX (Ω)	TEMP. COEFF Tc MAX	TEMP MAX (°C)	DWG. NO.
1	1N5998B	5	8.2	500m	5.0m	7.0		200J	DO35
2	BZX46C8V2	5	8.2	500m	15m	6.5	9.0	175A	DO35
3	BZX55C8V2	5	8.2	500m	5.0m	7.0	5.5	175A	DO35
4	BZX83C8V2	5	8.2	500m	5.0m	7.0	5.5	175A	DO35
5	CD82	5	8.2	500m	1.0m	75		200J	DO7
6	CTZ8.2A	5	8.2	500m	10m	50	550	200	DO35
7	MA5082	5	8.2	500m	5.0m	15	3.2	125J	M990
8	MLL5237B	5.0	8.2	500m§	20m	8.0	6.2	200J	F140
9	MTZ612,A	5†	8.2	.50	10m	16		175A	A60e
10	PS8911	5	8.2	.50	20m	3.0	6.1	150	A60p
11	RD8.2EB	5	8.2	500m	20m	10	5.7	175J	DO35
12▼	SZ.5-8.2-5-25								
		5.0	8.2	500m	25m			175	u5a
13	TS08200	5	8.2	500m	1.0u			200J	DO35
14	Z0B8.2	5†	8.2	500m	5.0m	6.0 †	8.0	200J	DO29
15	ZMM5237B	5.0	8.2	500m§	20m	8.0	6.2	200J	F139
16	ZPD8V2	5†	8.2	500m	5.0m	50	4.5mV	175J	DO35
17	ZPD8.2	5	8.2	500m	5.0m	7.0	5.5	175J	DO35
18	05Z8.2	6.0	8.2	500m	5.0m	20	6.0	175J	DO35
19	BZX97C8V2	6	8.2	500m	5.0m	7.0	5.5	175J	DO35
20	ZMM8.2	6†	8.2	500m	5.0m	7.0	5.5	175J	F135
21	BZV55C8V2	6.4	8.2	500m	5.0m	15	4.6	200J	F139
22	BZV60C8V2	6.4	8.2	500m	5.0m	15	4.6	200J	DO34
23	1N3401	10	8.2	500m	10m	15	2.0	200S	P5
24	1N3414	10	8.2	.50	1.0m	60	2.4	200A	P5
25	1N5237A	10	8.2	500m	20m	5.0	6.2	200A	A398a
26	1N5853A	10	8.2	500m	20m	34		150C	M859
27	1N5998A	10	8.2	500m	5.0m	15		200J	DO35
28	CTZ8.2	10	8.2	500m	10m	50	550	200	DO35
29	CV8	10	8.2	500m	5.0m				TO105
30	MLL5237A	10	8.2	500m§	20m	8.0	6.2	200J	F140
31	RD8.2EW	10	8.2	500m	20m	8.0		175J	DO34
32▼	SZ.5-8.2-10-25								
		10	8.2	500m	25m			175	u5a
33	ZMM5237A	10	8.2	500m§	20m	8.0	6.2	200J	F139
34	1N5237	20†	8.2	.50	20m			200A	A398a
35	1N5998	20	8.2	500m	5.0m	15		200J	DO35
36	MLL5237	20	8.2	500m§	20m	8.0		200J	F140
37▼	SZ.5-8.2-20-25								
		20	8.2	500m	25m			175	u5a
38	ZMM5237	20	8.2	500m§	20m	8.0	6.2	200J	F139
39	LVA382C	1	8.2	600m	1.0m	60		175A	DO14
40	LNA382B	2	8.2	600m	1.0m	75		175A	DO7
41	LVA382B	2	8.2	600m	1.0m	60		175A	DO14
42	1N4630	5	8.2	.60	15m	700	6.8	200A	DO14
43	GLA82,A,B	5†	8.2	600m	1.0m	75	6.2	175	DO7
44	LNA382A	5	8.2	600m	1.0m	75		175A	DO7
45	LVA382A	5	8.2	600m	1.0m	60		175A	DO14
46	LNA382	10	8.2	600m	1.0m	75		175A	DO7
47	MLNA382B	2	8.2	750m	1.0m	75		175A	A249e
48	1N1511A	5	8.2	750m	18m	3.0	6.0	200S	DO12
49	1N3677B	5	8.2	750m§	15m	6.5		175S	A1az
50	BZV41C8V2	5	8.2	750m	5.0m	15	5.5	175S	A412
51	MC6112,A	5†	8.2	.75	25m	16		175A	A2d
52	MGLA82,A,B	5†	8.2	750m	1.0m	75	6.2	175A	A249e
53	MLNA382A	5	8.2	750m	1.0m	75		175A	A249e
54	MLV756A	5	8.2	750m	20m	5.0		175A	A2j
55	TSZ8.2	5	8.2	750m	10m	12			TO39
56	1N1511	10	8.2	750m	18m	3.0	6.0	200S	DO12
57	1N3677A	10	8.2	750m§	15m	6.5		175S	A1az
58	MLNA382	10	8.2	750m	1.0m	75		175A	A249e
59	1N3677	20	8.2	750m§	15m	6.5		175S	A1az
60	HZ8.2PB		8.2	800m	40m	4.0		175J	DO41
61	AP8.2A,B		8.2	1.0 †	20m	10			DO35
62	DZB8.2		8.2	1.0	10m	30	4.0mV	150J	A298ap
63	GZB8.2		8.2	1.0	10m	30	4.0mV	150J	A298ap
64	MA2082		8.2	1.0	40m	5.0	4.5	200J	A277r
65	TSC4738CHIP								
			8.2	1.0	31m	4.5			u46
66	LVA1082C	1	8.2	1.0	1.0m	100		175	A266c
67	Z4A8.2	1†	8.2	1.0	50m	2.0	6.0	200J	DO29
68	LVA1082B	2	8.2	1.0	1.0m	100		175	A266c
69	SZ8.2	2†	8.2	1.0	20m	2.0 †	4.9	150A	A3g
70	1N1425	5	8.2	1.0	20m	5.0 †	5.0	200A	A154
71	1N1522A	5	8.2	1.0	25m	3.0	6.0	200S	DO3
72	1N1769A	5	8.2	1.0	100m	2.4		175A	DO13☑
73	1N1875A	5	8.2	1.0	25m	5.0	4.0	200C	A41e
74	1N3018B	5	8.2	1.0	31m	4.5		175A	A31a
75	1N4160B	5	8.2	1.0 §	31m	4.5		200S	DO29
76	1N4325B	5	8.2	1.0	31m	4.5	4.8	300S	DO7
77	1N4402B	5	8.2	1.0	31m	2.0	4.8	175A	A1cm
78	1N4659	5	8.2	1.0	31m	200	6.5	200A	DO15
79	1N4738A	5	8.2	1.0	31m	4.5		200A	DO41
80	1N5561B	5	8.2	1.0 §	31m	4.5		200A	A60ac
81	APD8.2A,B	5†	8.2	1.0 †	31m	10			A1rx
82	BZV85C8V2	5	8.2	1.0	25m	5.0	4.6mV	200J	DO41
83	BZX85C8V2	5	8.2	1.0 §	25m	5.0	7.0	150A	DO41
84	CD4738	5	8.2	1.0	31m	4.5	6.0	200J	u39a
85	CH4738	5	8.2	1.0	31m	4.5	6.0	200J	u10
86	CZ8.2,A,B,D								
		5†	8.2	1.0	40m	13	4.8	175	DO15
87	LVA1082A	5	8.2	1.0	1.0m	100		175	A266c
88	PL8V2Z	5	8.2	1.0	100m	2.0	5.1	150J	
89	PR238-RT	5	8.2	1.0	30m	6.0 †			DO7
90	PS10018B	5	8.2	1.0	31m	4.5		175A	A60p
91	PS10062	5	8.2	1.0	31m	3.0	6.5	150	A60p
92	RD8.2P	5.0	8.2	1.0	5.0m	15	5.4	150J	M1008
93▼	SZ1-8.2-5-25								
		5.0	8.2	1.0	25m			175	u5b
94	TZB8.2B	5	8.2	1.0 §	10m		6.5	175A	A1ty
95	UZ8708	5	8.2	1.0	31m	4.5	5.0	175	A380
96	VR8.2,A,B	5†	8.2	1.0	31m	4.5		125A	A1b
97	Z4B8.2	5†	8.2	1.0	50m	2.0	6.0	200J	DO29
98	Z8.2	5†	8.2	1.0	20m	1.2 †	6.0	150A	DO41
99	ZB8.2	5†	8.2	1.0 §	31m	4.5		150A	A1bc
100	ZB8.2B	5	8.2	1.0	31m	4.5		100C	A1bc
101	ZM4738A	5.0	8.2	1.0 §	31m	4.5		200J	F139
102	AW08-8.2B	5.1	8.2	1.0	25m	3.0	4.5	175J	A60au
103	AW01-08	6	8.2	1.0	25m	3.0	4.5	150J	A333
104	RD8.2FB	6	8.2	1.0	40m	4.0		175J	A297c
105	AW08-8.2A	7.8	8.2	1.0	25m	3.0	4.5	175J	A60au
106	1N1522	10	8.2	1.0	25m	3.0	6.0	200S	DO3
107	1N1769	10	8.2	1.0	100m	2.4		175A	DO13☑
108	1N1875	10	8.2	1.0	25m	5.0	4.0	200C	A41e
109	1N3018A	10	8.2	1.0	31m	4.5		175A	A31a
110	1N4160A	10	8.2	1.0 §	31m	4.5		200S	DO29
111	1N4325A	10	8.2	1.0	31m	4.5	4.8	300S	DO7
112	1N4402A	10	8.2	1.0	31m	2.0	4.8	175A	A1cm
113	1N4738	10	8.2	1.0	31m	4.5		200A	DO41
114	1N5561A	10	8.2	1.0 §	31m	4.5		200A	A60ac
115	1Z8.2	10	8.2	1.0	10m	30	4.9	150J	DO15
116	KS482A	10	8.2	1.0	5.0m	25 †	8.0	100C	A378
117▼	SZ1-8.2-10-25								
		10	8.2	1.0	25m			175	u5b
118	TZB8.2A	10	8.2	1.0 §	10m		6.5	175A	A1ty
119	UZ8808	10	8.2	1.0	31m	4.5	5.0	175	A380
120	ZB8.2A	10	8.2	1.0	31m	4.5		100C	A1bc
121	ZM4738	10	8.2	1.0 §	31m	4.5		200J	F139
122	1N3018	20	8.2	1.0	31m	4.5		175A	A31a
123	1N4160	20	8.2	1.0 §	31m	4.5		200S	DO29
124	1N4325	20	8.2	1.0	31m	4.5	4.8	300S	DO7
125	1N4402	20	8.2	1.0	31m	2.0		175S	A266a
126	1N5561	20	8.2	1.0 §	31m			200A	A60ac
127▼	SZ1-8.2-20-25								
		20	8.2	1.0	25m			175	u5b
128	BZX61C8V2	5	8.2	1.3	20m	7.5	4.0	175J	DO15
129	BZX87C8V2	5	8.2	1.3	20m	4.0	6.0	200J	A60al
130	BZY97C8V2	5	8.2	1.3	100m	2.0	8.0		A1rx
131	ZD8.2	5	8.2	1.3	100	2.0	4.0	150J	DO13
132	ZY8.2	5	8.2	1.3	100m	2.0	7.0	150J	A1bg
133	BZD10C8V2	6	8.2	1.3	100m	2.0	8.0		DO13
134	BZW22C8V2	6	8.2	1.3	100m	2.0	8.0		DO41
135	ZMY8.2	6	8.2	1.3	100m	2.0	5.5	200J	F149
136	ZPY8.2	12	8.2	1.3	100m	2.0	8.0	200J	DO41
137	1N5923D	1	8.2	1.5	45m	3.5		200J	DO41
138	1N5923C	2	8.2	1.5	45m	3.5		200J	DO41
139	1N3787B	5	8.2	1.5	46m	3.5	6.5	175S	C14☑
140	1N4463	5	8.2	1.5	31m	3.0		175A	A60y
141	1N5923B	5	8.2	1.5	45m	3.5		200J	DO41
142	1S4008,A	5†	8.2	1.5	50m	1.5	5.0	150A	DO1
143	BZY96C8V2	5	8.2	1.5	50m	3.5	6.0	175J	DO1
144	MC6312,A	5†	8.2	1.5	100m	15			A1g
145	1N3787A	10	8.2	1.5	46m	3.5	6.5	175S	C14☑
146	1N5923A	10	8.2	1.5	45m	3.5		200J	DO41
147	1N3787	20	8.2	1.5	46m	3.5	6.5	175S	C14☑
148	1N5923	20	8.2	1.5	45m	3.5		200J	DO41
149	2EZ8.2D5	5	8.2	2.0	61m	2.3		200J	A1ay
150	2VR8.2,A,B	5†	8.2	2.0	61m	3.5			A3e
151	BZV47C8V2	5	8.2	2.0	100m	2.0	4.8	175J	A344r
152	LMZ8.2A	5	8.2	2.0	61m	2.3	6.5	150A	DO41
153	ZBC8.2	5†	8.2	2.0 §	62m	3.0		150A	A1bc
154	ZBC8.2B	5	8.2	2.0	62m	3.0			A1ty
155	2EZ8.2D10	10	8.2	2.0	61m	2.3		200J	A1ay
156	LMZ8.2	10	8.2	2.0	61m	2.3	6.5	150A	DO41
157	ZBC8.2A	10	8.2	2.0	62m	3.0			A1ty
158	2EZ8.2D	20	8.2	2.0	61m	2.3		200J	A1ay
159	1N5018A	5	8.2	2.5	76m	2.1	4.8	150	A1gn
160	BZX70C8V2	5	8.2	2.5	50m	3.5	4.0mV	150J	A171b
161	Z2B8.2	5†	8.2	2.5	50m	3.0	6.0	200J	DO1
162	AU01-08	6	8.2	2.5	65m	3.0	5.2	165J	A333b
163	1N5018	10	8.2	2.5	76m	2.1	4.8	150	A1gn
164	3EZ8.2D1	1.0	8.2	3.0	91m	2.3		150J	A1ay
165	3EZ8.2D2	2.0	8.2	3.0	91m	2.3		150J	A1ay
166	3EZ8.2D3	3.0	8.2	3.0	91m	2.3		150J	A1ay
167	3EZ8.2D4	4.0	8.2	3.0	91	2.3		150J	A1ay
168	1N5065	5	8.2	3.0	75m	3.0		175A	A146u
169	3EZ8.2D5	5	8.2	3.0	91m	2.3		200J	A1ay
170	3VR8.2,A,B	5†	8.2	3.0	93m	3.0			A3al
171	BZV16C8V2	5	8.2	3.0	62m	4.5	4.8	175	DO3
172	MZ708	5	8.2	3.0	75m	3.0	5.0	175A	A146j
173	UDZ708	5	8.2	3.0	75m	4.0		175A	A356a
174	UZ708	5	8.2	3.0	75m	3.0	5.0	175A	A380
175	ZCC8.2	5†	8.2	3.0 §	75m	3.0		150A	A1ey
176	ZCC8.2B	5	8.2	3.0	75m	3.0			A1ey
177	3EZ8.2D10	10	8.2	3.0	91m	2.3		200J	A1ay
178	MZ808	10	8.2	3.0	75m	3.0	5.0	175A	A146j
179	UZ808	10	8.2	3.0	75m	3.0	5.0	175A	A380
180	ZCC8.2A	10	8.2	3.0	75m	3.0			A1ey
181	3EZ8.2D	20	8.2	3.0	91m	2.3		200J	A1ay
182	MZ908	20	8.2	3.0	75m	3.0	5.0	175A	A146j
183	UZ908	20	8.2	3.0	75m	3.0	5.0	175A	A380
184	1N1592A	5	8.2	3.5	80m	1.5	6.0	200S	DO4
185	1N1592	10	8.2	3.5	80m	1.5	6.0	200S	DO4
186▼	SZ3-8.2-5-25								
		5.0	8.2	5.0	25m			175	u5c
187▼	SZ3-8.2-10-25								
		10	8.2	5.0	25m			175	u5c
188▼	SZ3-8.2-20-25								
		20	8.2	5.0	25m			175	u5c
189	RD8.2EB3		8.24	500m	20m	8		175J	A277b
190	RD8.2EL3		8.24	500m	1.0m	8.0		175J	A277b
191	RD8.2EN3		8.24	500m	5.0m	8.0		175J	A277b
192	HZ8.2EB3	2.6	8.24	500m	20m	6.0		175J	DO35
193	1N1958B	1	8.3	400m	5.0m	15	6.0	150	DO7
194	KZ483C	1	8.3	400m§	250u	175	6.2	175A	DO7
195	LVA183C	1	8.3	400m	250u	350	6.2	150A	DO14
196	LVA483C	1	8.3	400m	250u	175	6.2	150A	DO7
197	HZ9A3	2	8.3	400m	5.0m	20	4.2mV	175J	DO35
198	HZ9A3L	2	8.3	400m	500u	60	3.7	175J	DO35
199	KZ483B	2	8.3	400m§	250u	175	6.2	175A	DO7
200	LVA183A	2	8.3	400m	250u	350	6.2	150A	DO14
201	LVA183B	2	8.3	400m	250u	350	6.2	150A	DO14
202	LVA483A	2	8.3	400m	250u	175	6.2	150A	DO7
203	LVA483B	2	8.3	400m	250u	175	6.2	150A	DO7
204	KZ483A	3	8.3	400m§	250u	175	6.2	175A	DO7
205	T-LVA483A	3†	8.3	400m	250u	175	5.1mV	175J	DO35
206	1N1958A	5	8.3	400m	5.0m	15	6.0	150	DO7
207	KZ483	5†	8.3	400m		175	5.1	175A	DO7
208	LVA183	6	8.3	400m	250u	350	6.2	150A	DO14
209	LVA483	6	8.3	400m	250u	175	6.2	150A	DO14

SYMBOLS AND CODES EXPLAINED IN INTERPRETER

2. VOLTAGE REFERENCE DIODES - $V_Z \geq 7.5$ V (Cont'd)

IN ORDER OF: (1) REF. VOLTAGE (2) PD MAX (3) TOLERANCE & (4) TYPE NUMBER

LINE No.	4 TYPE No.	3 TOL ± (%)	1 NOM. REF. VOLT. (V)	2 PD @ 25°C MAX (W)	TEST CUR. Izt (A)	DYN. IMP. MAX (Ω)	TEMP. COEFF Tc MAX	TEMP MAX (°C)	DWG. NO.
1	1N1958	10	8.3	400m	5.0m	15	6.0	150	DO7
2	HZ9HA3	2	8.3	500m	5.0m	20	4.2mV	175J	DO35
3	1N1875B	1	8.3	1.0	25m	1.0 †	4.0	175A	DO13
4	BZ083	5	8.3	1.0	30m	6.0	5.2	175J	DO41
5	RD8.2FB3		8.33	1.0	40m	4.0		175J	A277r
6	PS1200	5	8.4		10m	15	.40	100	A1gb
7	PS1200A	5	8.4		10m	15	.20	100	A1gb
8	PS1200B	5	8.4		10m	15	.10	100	A1gb
9	PS1201	5	8.4		10m	15	.40	100	A1gb
10	PS1201A	5	8.4		10m	15	.20	100	A1gb
11	PS1201B	5	8.4		10m	15	.10	100	A1gb
12	PS1202	5	8.4		10m	15	.40	100	A1gb
13	PS1202A	5	8.4		10m	15	.20	100	A1gb
14	PS1202B	5	8.4		10m	15	.10	100	A1gb
15	PS1203	5	8.4		10m	15	.40	100	A1gb
16	PS1203A	5	8.4		10m	15	.20	100	A1gb
17	PS1203B	5	8.4		10m	15	.10	100	A1gb
18	PS1204	5	8.4		10m	15	.40	100	A1gb
19	PS1204A	5	8.4		10m	15	.20	100	A1gb
20	PS1204B	5	8.4		10m	15	.10	100	A1gb
21	PS1205	5	8.4		10m	15	.40	100	A1gb
22	PS1205A	5	8.4		10m	15	.20	100	A1gb
23	PS1205B	5	8.4		10m	15	.10	100	A1gb
24	PS1207	5	8.4		10m	15	.40	100	A1gc
25	PS1207A	5	8.4		10m	15	.20	100	A1gc
26	PS1207B	5	8.4		10m	15	.10	100	A1gc
27	1N430	5	8.4	.25	10m	15	.20	100A	S20a
28	1N430A	5	8.4	.25	10m	15	.10	100A	S20a
29	1N430B	5	8.4	.25	10m	15	.10	150A	S20a
30	1N1530	5	8.4	.25	10m	15	.20	150	C7
31	1N1530A	5	8.4	.25	10m	15	.10	150	C7
32	CD4111	5	8.4	.25	10m	15	.05	125A	A1cj
33	CD4112	5	8.4	.25	10m	15	.10	125A	A1cj
34	CD4113	5	8.4	.25	10m	15	.20	125A	A1cj
35	CD4114	5	8.4	.25	10m	15	.50	125A	A1cj
36	CD4115	5	8.4	.25	10m	15	1.0	125A	A1cj
37	PS1501	5	8.4	.25	10m	15	.20	150A	A1gc
38	PS1501A	5	8.4	.25	10m	15	.10	150A	A1gc
39	1N3199	5	8.4	.27	10m	15	.50	150S	A1ha
40	1N3200	5	8.4	.27	10m	15	.30	150S	A1ha
41	1N3201	5	8.4	.27	10m	15	.20	150S	A1ha
42	1N3202	5	8.4	.27	10m	15	.10	150S	A1ha
43	1N3154	5	8.4	400m§	10m	15	1.0	175A	DO7
44	1N3154A	5	8.4	400m§	10m	15	1.0	175A	DO7
45	1N3155	5	8.4	400m§	10m	15	500m	175A	DO7
46	1N3155A	5	8.4	400m§	10m	15	500m	175A	DO7
47	1N3156	5	8.4	400m§	10m	15	200m	175A	DO7
48	1N3156A	5	8.4	400m§	10m	15	200m	175A	DO7
49	1N3157	5	8.4	400m§	10m	15	100u	175A	DO7
50	1N3157A	5	8.4	400m§	10m	15	100u	175A	DO7
51	CD3154	5	8.4	400m	10m	30	1.0	200J	u37a
52	CD3155	5	8.4	400m	10m	30	500m	200J	u37a
53	CD3156	5	8.4	400m	10m	30	200m	200J	u37a
54	ZS8.5	5	8.4	400m	5.0m	20	500m	150A	C3h
55	SV3173	5	8.4	500m	10m	15	.50	150A	A1hd
56	SV3174	5	8.4	500m	10m	15	.30	150A	A1hd
57	SV3175	5	8.4	500m	10m	15	.20	150A	A1hd
58	SV3176	5	8.4	500m	10m	15	.10	150A	A1hd
59	RD8.2JSB3(A)	2.5	8.46	400m	5.0m	30	5.0	175J	DO34
60	HZS8.2JB3	2.6	8.46	400m	5.0m	25		200J	A380d
61	1N4775B		8.5		500u	200	1.0	150	DO7
62	1N4776B		8.5		500u	200	.50	150	DO7
63	1N4777B		8.5		500u	200	.20	150	DO7
64	1N4778B		8.5		500u	200	.10	150	DO7
65	1N4779B		8.5		500u	200	.05	150	DO7
66	1N4780B		8.5		1.0m	100	1.0	150	DO7
67	1N4781B		8.5		1.0m	100	.50	150	DO7
68	1N4782B		8.5		1.0m	100	.20	150	DO7
69	1N4783B		8.5		1.0m	100	.10	150	DO7
70	1N4784B		8.5		1.0m	100	.05	150	DO7
71	1N2044B	5	8.5		1	.80		150A	S19a
72	RD8.2MB3	3	8.5	200m	5.0m	30		150	
73	1N4775	5	8.5	.25	.50m	200	1.0	175A	DO7
74	1N4775A	5	8.5	.25	.50m	200	1.0	175A	DO7
75	1N4776	5	8.5	.25	.50m	200	.50	175A	DO7
76	1N4776A	5	8.5	.25	.50m	200	.50	175A	DO7
77	1N4777	5	8.5	.25	.50m	200	.20	175A	DO7
78	1N4777A	5	8.5	.25	.50m	200	.20	175A	DO7
79	1N4778	5	8.5	.25	.50m	200	.10	175A	DO7
80	1N4778A	5	8.5	.25	.50m	200	.10	175A	DO7
81	1N4779	5	8.5	.25	.50m	200	.05	175A	DO7
82	1N4779A	5	8.5	.25	.50m	200	.05	175A	DO7
83	1N4780	5	8.5	.25	1.0m	100	1.0	175A	DO7
84	1N4780A	5	8.5	.25	1.0m	100	1.0	175A	DO7
85	1N4781	5	8.5	.25	1.0m	100	.50	175A	DO7
86	1N4781A	5	8.5	.25	1.0m	100	.50	175A	DO7
87	1N4782	5	8.5	.25	1.0m	100	.20	175A	DO7
88	1N4782A	5	8.5	.25	1.0m	100	.20	175A	DO7
89	1N4783	5	8.5	.25	1.0m	100	.10	175A	DO7
90	1N4783A	5	8.5	.25	1.0m	100	.10	175A	DO7
91	1N4784	5	8.5	.25	1.0m	100	.05	175A	DO7
92	1N4784A	5	8.5	.25	1.0m	100	.05	175A	DO7
93	1S2067	6	8.5	250m	10m	20	1.0	150J	A1ce
94	1S2069	6	8.5	250m	10m	20	200m	150J	A1ce
95	1S1717		8.5	.30	10m	20		125J	
96	HZ9B1	2	8.5	400m	5.0m	20	4.2mV	175J	DO35
97	HZ9B1L	2	8.5	400m	500u	60	3.8	175J	DO35
98	1N3148	5	8.5	.40	10m	15	.50	150A	A31b
99	HZ9HB1	2	8.5	500m	5.0m	20	4.2mV	175J	DO35
100	EQA01-09R	11	8.5	500m	15m	8.0	.05	125J	A387
101	1N2790	5	8.5	1.0	10m	15	.20	150A	A154
102	BZ085	5	8.5	1.0	30m	6.0	5.3	175J	A60t
103	VR8.5,A,B	5†	8.5	1.0	25m	6.0	4.0	125C	A1ex
104	1S224	10	8.5	1.0	35m	4.0	4.7	150J	A56a
105	2VR8.5,A,B	5†	8.5	2.0	250u	6.0	4.0	125C	A3e
106	3VR8.5,A,B	5†	8.5	3.0	250m	1.5			A3al
107	RD9.1EB1		8.51	500m	20m	8		175J	A277b
108	RD9.1EL1		8.51	500m	1.0m	8.0		175J	A277b
109	RD9.1EN1		8.51	500m	5.0m	8.0		175J	A277b
110	HZ9.1EB1	2.4	8.51	500m	20m	6.0		175J	DO35
111	RD9.1FB1		8.57	1.0	40m	6.0		175J	A277r
112	KZ486B	1	8.6	400m§	250u	175	6.4	175A	DO7
113	KZ486C	1	8.6	400m§	250u	175	6.4	175A	DO7
114	LVA186B	1	8.6	400m	250u	350	6.3	150A	DO14
115	LVA186C	1	8.6	400m	250u	350	6.3	150A	DO14
116	LVA486B	1	8.6	400m	250u	175	6.3	150A	DO7
117	LVA486C	1	8.6	400m	250u	175	6.3	150A	DO7
118	KZ486A	2	8.6	400m§	250u	175	6.4	175A	DO7
119	LVA186A	2	8.6	400m	250u	350	6.3	150A	DO14
120	LVA486A	2	8.6	400m	250u	175	6.3	150A	DO7
121	T-LVA486A	3†	8.6	400m	250u	175	5.5mV	175J	DO35
122	KZ486	5†	8.6	400m		175	5.5	175A	DO7
123	LVA186	6	8.6	400m	250u	350	6.3	150A	DO14
124	LVA486	6	8.6	400m	250u	175	6.3	150A	DO14
125	CD5345B	5	8.7		150m	2.0	6.2	200J	u39b
126	MMBZ5238	5	8.7		20m	8.0			M500
127▼	TMPZ5238	5.0	8.7		20m	8.0			TO236Ø
128	RD9AK		8.7	250m	10m	10		175J	A277b
129	RD9AM		8.7	250m	10m	10		175J	A277b
130	1N4695	5	8.7	.25	.05m			200A	DO14
131	MC6416A	5†	8.7	.25	7.5m	15	1.0	75R	F133e
132	MC6416B	5†	8.7	.25	7.5m	15	1.1	75R	A188
133	MC6417A	5†	8.7	.25	7.5m	15	1.0	100R	F133e
134	MC6417B	5†	8.7	.25	7.5m	15	1.0	100R	A188
135	MC6418A	5†	8.7	.25	7.5m	15	.50	75R	F133e
136	MC6418B	5†	8.7	.25	7.5m	15	.50	75R	A188
137	MC6419A	5†	8.7	.25	7.5m	15	.50	100R	F133e
138	MC6419B	5†	8.7	.25	7.5m	15	.50	100R	A188
139	MC6420A	5†	8.7	.25	7.5m	15	.20	75R	F133e
140	MC6420B	5†	8.7	.25	7.5m	15	.20	75R	A188
141	MC6421A	5†	8.7	.25	7.5m	15	.20	100R	F133e
142	MC6421B	5†	8.7	.25	7.5m	15	.20	100R	A188
143	MC6422A	5†	8.7	.25	7.5m	15	.10	75R	F133e
144	MC6422B	5†	8.7	.25	7.5m	15	.10	75R	A188
145	MC6423A	5†	8.7	.25	7.5m	15	.10	100R	F133e
146	MC6423B	5†	8.7	.25	7.5m	15	.10	100R	A188
147	MC6428A	5†	8.7	.25	7.5m	15	.05	75R	F133e
148	MC6428B	5†	8.7	.25	7.5m	15	.10	75R	A188
149	MC6429A	5†	8.7	.25	7.5m	15	.05	100R	F133e
150	MC6429B	5†	8.7	.25	7.5m	15	.10	100R	A188
151	C5D5238	10	8.7	320m	20m			150S	M713a
152	HZ9B2	2	8.7	400m	5.0m	20	4.2mV	175J	DO35
153	HZ9B2L	2	8.7	400m	500u	60	3.8	175J	DO35
154	1N4102	5	8.7	400m	.25m	200		200J	DO7
155	CD4102	5	8.7	400m	250u	200	4.9	200J	u39a
156	CD5238B	5	8.7	400m	20m	8.0	6.5	200J	u39a
157	CH4102	5	8.7	400m	250u	200	7.5	200J	u10
158	CH5238	5	8.7	400m	20m	8.0	6.5	200J	u10
159	MC6416C	5†	8.7	400m	7.5m	15	1.0	75R	A1as
160	MC6417C	5†	8.7	400m	7.5m	15	1.0	100R	A1as
161	MC6418C	5†	8.7	400m	7.5m	15	500m	75R	A1as
162	MC6419C	5†	8.7	400m	7.5m	15	500m	100R	A1as
163	MC6420C	5†	8.7	400m	7.5m	15	200m	75R	A1as
164	MC6421C	5†	8.7	400m	7.5m	15	200m	100R	A1as
165	MC6422C	5†	8.7	400m	7.5m	15	100m	75R	A1as
166	MC6423C	5†	8.7	400m	7.5m	15	100m	100R	A1as
167	MC6428C	5†	8.7	400m	7.5m	15	50m	75R	A1as
168	MC6429C	5†	8.7	400m	7.5m	15	50m	100R	A1as
169	EQA02-09AB	1	8.7	500m	20m	10	.05	175J	A1ac
170	HZ9HB2	2	8.7	500m	5.0m	20	4.2mV	175J	DO35
171	1N5238B	5	8.7	500m	20m	6.0	6.5	200A	A398a
172	1N5854B	5	8.7	500m	20m	44		150C	M859
173	MLL5238B	5.0	8.7	500m§	20m	8.0	6.5	200J	F140
174	RD8.2EC	5	8.7	500m	20m	10	5.9	175J	DO35
175	TS08700	5	8.7	500m	1.0u			200J	DO35
176	ZMM5238B	5.0	8.7	500m§	20m	8.0	6.5	200J	F139
177	1N5238A	10	8.7	500m	20m	6.0	6.5	200A	A398a
178	1N5854A	10	8.7	500m	20m	44		150C	M859
179	MLL5238A	10	8.7	500m§	20m	8.0	6.5	200J	F140
180	ZMM5238A	10	8.7	500m§	20m	8.0	6.5	200J	F139
181	1N5238	20†	8.7	.50	20m			200A	A398a
182	MLL5238	20	8.7	500m§	20m	8.0		200J	F140
183	ZMM5238	20	8.7	500m§	20m	8.0	6.5	200J	F139
184	HZ8.2PC		8.7	800m	40m	4.0		175J	DO41
185	RD9BK		8.7	1.0	40m	5.0		150J	A427
186	RD9BM		8.7	1.0	40m	5.0		150J	A427
187	RD9CK		8.7	3.0	120m	3.0		150J	S547
188	RD9CM		8.7	3.0	120m	3.0		150J	S547
189	1N1313A	5	8.75	150m	200u			150A	C1
190	1N1313	10	8.75	150m	200u			150A	C1
191	RD9A	10	8.75	.20	10m	10	6.0	150S	A1dw
192	1N764	10	8.75	250m	10m	12		150A	A398
193	D814B	9	8.75	340m	5.0m	18 †	8.0	100C	A378
194	HZS9.1JB1	2.4	8.75	400m	5.0m	25		200J	A380d
195	RD9.1JSB1(A)	2.5	8.75	400m	5.0m	30	5.3	175J	DO34
196	1N2035	10	8.75	750m	10m	15		150A	DO12
197	RD8.2FC	6	8.75	1.0	40m	4.0		175J	A297c
198	RD9.1EB2		8.79	500m	20m	8		175J	A277b
199	RD9.1EL		8.79	500m	1.0m	8.0		175J	A277b
200	RD9.1EL2		8.79	500m	1.0m	8.0		175J	A277b
201	RD9.1EN		8.79	500m	5.0m	8.0		175J	A277b
202	RD9.1EN2		8.79	500m	5.0m	8.0		175J	A277b
203	HZ9.1EB2	2.4	8.79	500m	20m	6.0		175J	DO35
204	RD9.1MB1	3	8.8	200m	5.0m	30		150	
205	1N764A	5†	8.8	250m	10m	12	5.0	150	DO7
206	EQA01-09	16	8.8	500m	15m	8.0	.05	125J	A387
207	BZ088	5	8.8	1.0	30m	6.0	5.5	175J	DO41
208	1S2129	15	8.8	1.0	40m	5.0		150J	A41b
209	EQB01-09	16	8.8	1.0	30m	5.0	.05	140J	A21b
210	RD9.1FB2		8.86	1.0	40m	6.0		175J	A277r
211	KZ489B	1	8.9	400m§	250u	175	6.6	175A	DO7
212	KZ489C	1	8.9	400m§	250u	175	6.6	175A	DO7
213	LVA189B	1	8.9	400m	250u	350	6.5	150A	DO14
214	LVA189C	1	8.9	400m	250u	350	6.5	150A	DO14
215	LVA489B	1	8.9	400m	250u	175	6.5	150A	DO7
216	LVA489C	1	8.9	400m	250u	175	6.5	150A	DO7
217	HZ9B3	2	8.9	400m	5.0m	20	4.2mV	175J	DO35
218	HZ9B3L	2	8.9	400m	500u	60	3.9	175J	DO35

SYMBOLS AND CODES EXPLAINED IN INTERPRETER

2. VOLTAGE REFERENCE DIODES - $V_Z \geq 7.5$ V (Cont'd)

IN ORDER OF: (1) REF. VOLTAGE (2) PD MAX (3) TOLERANCE & (4) TYPE NUMBER

LINE No.	4 TYPE No.	3 TOL ± (%)	1 NOM. REF. VOLT. (V)	2 PD @ 25°C MAX (W)	TEST CUR. Izt (A)	DYN. IMP. MAX (Ω)	TEMP. COEFF Tc MAX	TEMP MAX (°C)	DWG. NO.
1	KZ489A	2	8.9	400m§	250u	175	6.6	175A	DO7
2	LVA189A	2	8.9	400m	250u	350	6.5	150A	DO14
3	LVA489A	2	8.9	400m	250u	175	6.5	150A	DO7
4	T-LVA489A	3†	8.9	400m	250u	175	5.8mV	175J	DO35
5	KZ489	5†	8.9	400m		175	5.8	175A	DO7
6	LVA189	6	8.9	400m	250u	350	6.5	150A	DO14
7	LVA489	6	8.9	400m	250u	175	6.5	150A	DO14
8	HZ9HB3	2	8.9	500m	5.0m	20	4.2mV	175J	DO35
9	1N2044C	5	9.0		1	.80		150A	S19a
10	KS77B	5	9.0	57m	5.0m	35		100A	DO7
11	KS78	5	9.0	57m	5.0m	35		125A	DO7
12	KS78B	5	9.0	57m	5.0m	35		100A	DO7
13	BZV32		9.0	250m	7.5m	20			DO35
14	BZV32A		9.0	250m	7.5m	20			DO35
15	BZV32B		9.0	250m	7.5m	20			DO35
16	BZV33		9.0	250m	7.5m	20			DO35
17	BZV33A		9.0	250m	7.5m	20			DO35
18	BZV33B		9.0	250m	7.5m	20			DO35
19	BZV34		9.0	250m	7.5m	20			DO35
20	BZV34A		9.0	250m	7.5m	20			DO35
21	BZV34B		9.0	250m	7.5m	20			DO35
22	BZV35		9.0	250m	7.5m	20			DO35
23	BZV35A		9.0	250m	7.5m	20			DO35
24	BZV35B		9.0	250m	7.5m	20			DO35
25	BZV36		9.0	250m	7.5m	20			DO35
26	BZV36A		9.0	250m	7.5m	20			DO35
27	BZV36B		9.0	250m	7.5m	20			DO35
28	SZ9	7	9.0	.25	5.0m	20	.75	150J	C1f
29	BZY88C9V1	5	9.0	400m	5.0m	25	6.5	200J	DO7
30	CD935	5	9.0	400m	7.5m	30	1.0	200J	u37a
31	CD935A	5	9.0	400m	7.5m	30	1.0	200J	u37a
32	CD936	5	9.0	400m	7.5m	30	500m	200J	u37a
33	CD936A	5	9.0	400m	7.5m	30	500m	200J	u37a
34	CD937	5	9.0	400m	7.5m	30	200m	200J	u37a
35	CD937A	5	9.0	400m	7.5m	30	200m	200J	u37a
36	MZL309	5	9.0	400m	500u	60	5.8	175J	DO35
37	ZR935-20	5	9.0	400m§	2.0m	60	1.0	175A	DO7
38	ZR935-50	5	9.0	400m§	5.0m	30	1.0	175A	DO7
39	ZR935-75	5	9.0	400m§	7.5m	20	1.0	175A	DO7
40	ZR935-100	5	9.0	400m§	10m	16	1.0	175A	DO7
41	ZR935-120	5	9.0	400m§	12m	14	1.0	175A	DO7
42	ZR935-150	5	9.0	400m§	15m	10	1.0	175A	DO7
43	ZR936-20	5	9.0	400m§	2.0m	60	500m	175A	DO7
44	ZR936-50	5	9.0	400m§	5.0m	30	500m	175A	DO7
45	ZR936-75	5	9.0	400m§	7.5m	20	500m	175A	DO7
46	ZR936-100	5	9.0	400m§	10m	16	500m	175A	DO7
47	ZR936-120	5	9.0	400m§	12m	14	500m	175A	DO7
48	ZR936-150	5	9.0	400m§	15m	10	500m	175A	DO7
49	ZR937-20	5	9.0	400m§	2.0m	60	200m	175A	DO7
50	ZR937-50	5	9.0	400m§	5.0m	30	200m	175A	DO7
51	ZR937-75	5	9.0	400m§	7.5m	20	200m	175A	DO7
52	ZR937-100	5	9.0	400m§	10m	16	200m	175A	DO7
53	ZR937-120	5	9.0	400m§	12m	14	200m	175A	DO7
54	ZR937-150	5	9.0	400m§	15m	10	200m	175A	DO7
55	ZR938-50	5	9.0	400m§	5.0m	30	100m	175A	DO7
56	ZR938-75	5	9.0	400m§	7.5m	20	100m	175A	DO7
57	ZR938-100	5	9.0	400m§	10m	16	100m	175A	DO7
58	ZR938-120	5	9.0	400m§	12m	14	100m	175A	DO7
59	ZR939-50	5	9.0	400m§	5.0m	30	50m	175A	DO7
60	ZR939-75	5	9.0	400m§	7.5m	20	50m	175A	DO7
61	ZR939-100	5	9.0	400m§	10m	16	50m	175A	DO7
62	ZR939-120	5	9.0	400m§	12m	14	50m	175A	DO7
63	ZS9	5†	9.0	400m	7.5m	20	500m	150A	C3h
64▼	ZS91#C	5	9.0	400m§	15m	20	1.0	175A	D07
65	ZS901	5	9.0	400m§	12m	20	100m	175A	DO7
66	ZS902	5	9.0	400m§	15m	20	200m	175A	DO7
67	ZS905	5	9.0	400m§	15m	20	500m	175A	DO7
68	1N935	5	9.0	.50	7.5m	20	1.0	75R	DO7
69	1N935A	5	9.0	.50	7.5m	20	1.0	100R	DO7
70	1N935B	5	9.0	.50	7.5m	20	1.0	150R	DO7
71	1N936	5	9.0	.50	7.5m	20	.50	75R	DO7
72	1N936A	5	9.0	.50	7.5m	20	.50	100R	DO7
73	1N936B	5	9.0	.50	7.5m	20	.50	150R	DO7
74	1N937	5	9.0	.50	7.5m	20	.20	75R	DO7
75	1N937A	5	9.0	.50	7.5m	20	.20	100R	DO7
76	1N937B	5	9.0	.50	7.5m	20	.20	150R	DO7
77	1N938	5	9.0	.50	7.5m	20	.10	75R	DO7
78	1N938A	5	9.0	.50	7.5m	20	.10	100R	DO7
79	1N938B	5	9.0	.50	7.5m	20	.10	150R	DO7
80	1N939	5	9.0	.50	7.5m	20	.05	75R	DO7
81	1N939A	5	9.0	.50	7.5m	20	.05	100R	DO7
82	1N939B	5	9.0	.50	7.5m	20	.05	150R	DO7
83	1N940	5	9.0	.50	7.5m	20	.02	75	DO7
84	1N940A	5	9.0	.50	7.5m	20	.02	100	DO7
85	1N940B	5	9.0	.50	7.5m	20	.02	150	DO7
86	MZ309,A,B,C	5	9.0	500m	10m	15	5.8	175J	DO35
87	PS1215	5	9.0	.50	1.0m	150	1.0	175S	A1gb
88	PS1215A	5	9.0	.50	1.0m	150	.50	175S	A1gb
89	PS1215B	5	9.0	.50	1.0m	150	.20	175S	A1gb
90	PS1215C	5	9.0	.50	1.0m	150	.10	175S	A1gb
91	EQA01-09S	10	9.0	500m	15m	8.0	.05	125J	A387
92	AP9.1A,B		9.0	1.0 †	20m	35			DO35
93	BZ090	5	9.0	1.0	30m	6.0	5.6	175J	A60t
94	MZ409,A,B,C	5	9.0	1.0	20	8.0	5.8	175J	DO41
95	AW01-09	6	9.0	1.0	25m	3.0	5.3	150J	A333
96	SZL9	7	9.0	1.3	50m	3.5		150J	S442
97	AU01-09	6	9.0	2.5	65m	3.0	6.2	165J	A333b
98	3KZ10	10†	9.00	3.0 §	125m		.07		A3ak§
99	HZS9.1JB2	2.5	9.04	400m	5.0m	25		200J	A380d
100	RD9.1JSB2(A)	2.5	9.04	400m	5.0m	30	5.3	175J	DO34
101	RD9.1FB	6	9.05	1.0	40m	6.0		175J	A297c
102	RD9.1EB3		9.06	500m	20m	8		175J	A277b
103	RD9.1EL3		9.06	500m	1.0m	8.0		175J	A277b
104	RD9.1EN3		9.06	500m	5.0m	8.0		175J	A277b
105	HZ9.1EB3	2.6	9.07	500m	20m	6.0		175J	DO35

$V_Z \geq 9.1$ V

LINE No.	4 TYPE No.	3 TOL ± (%)	1 NOM. REF. VOLT. (V)	2 PD @ 25°C MAX (W)	TEST CUR. Izt (A)	DYN. IMP. MAX (Ω)	TEMP. COEFF Tc MAX	TEMP MAX (°C)	DWG. NO.
109	1N4765B		9.1		500u	300	1.0	150	DO7
110	1N4766B		9.1		500u	300	.50	150	DO7
111	1N4767B		9.1		500u	300	.20	150	DO7
112	1N4768B		9.1		500u	300	.10	150	DO7
113	1N4769B		9.1		500u	300	.05	150	DO7
114	1N4770B		9.1		1.0m	200	1.0	150	DO7
115	1N4771B		9.1		1.0m	200	.50	150	DO7
116	1N4772B		9.1		1.0m	200	.20	150	DO7
117	1N4773B		9.1		1.0m	200	.10	150	DO7
118	1N4774B		9.1		1.0m	200	.05	150	DO7
119	TZPD9.1		9.1		5.0m	10	7.0		DO35
120	TZPY9.1		9.1		50m	4.0	6.0		DO41
121	BZV49C9V1	5	9.1		5.0m	10	2.0	150J	M1008
122	CD4739A	5.0	9.1		28m	5.0		200	u52
123	CD4768A	5.0	9.1		500u	350		200	u37a
124	CD5346B	5	9.1		150m	2.0	6.5	200J	u39b
125	MC72	5†	9.1		10m	19			u4b
126	MMBZ5239	5	9.1		20m	10			M500
127	NC9V1	5	9.1		5.0m	115	6.0		u47
128▼	TMPZ5239	5.0	9.1		20m	17			TO236☑
129	TSC6090CHIP	5	9.1		1.0m				u46
130	DSZ3009	10	9.1		75m	3.0	5.0		A266
131	BZ9.1	5	9.1	.15	5.0m	60		170A	DO7
132	MA3091	5.0	9.1	150m	5.0m	15	3.8	125J	M713b
133	RD9.1MB		9.1	200m	5.0m	30		150J	M500c
134	RD9.1MB2	3	9.1	200m	5.0m	30		150	
135	BZX84C9V1	5	9.1	200m	5.0m	15	6.0	150J	M500d
136	ESZ9.1	5	9.1	200m	10m	8.0 †			TO106
137	MSZ9.1	5	9.1	200m	5m	10 †			C202
138	CZ9	10	9.1	200m	5.0m				TO106
139	1N713A	5	9.1	250m	12m	7.0	6.0	175A	DO7
140	1N4696	5	9.1	.25	.05m			200A	DO14
141	1N4765	5	9.1	.25	.50m	350	1.0	175A	DO7
142	1N4765A	5	9.1	.25	.50m	350	1.0	175A	DO7
143	1N4766	5	9.1	.25	.50m	350	.50	175A	DO7
144	1N4766A	5	9.1	.25	.50m	350	.50	175A	DO7
145	1N4767	5	9.1	.25	.50m	350	.20	175A	DO7
146	1N4767A	5	9.1	.25	.50m	350	.20	175A	DO7
147	1N4768	5	9.1	.25	.50m	350	.10	175A	DO7
148	1N4768A	5	9.1	.25	.50m	350	.10	175A	DO7
149	1N4769	5	9.1	.25	.50m	350	.05	175A	DO7
150	1N4769A	5	9.1	.25	.50m	350	.05	175A	DO7
151	1N4770	5	9.1	.25	1.0m	200	1.0	175A	DO7
152	1N4770A	5	9.1	.25	1.0m	200	1.0	175A	DO7
153	1N4771	5	9.1	.25	1.0m	200	.50	175A	DO7
154	1N4771A	5	9.1	.25	1.0m	200	.50	175A	DO7
155	1N4772	5	9.1	.25	1.0m	200	.20	175A	DO7
156	1N4772A	5	9.1	.25	1.0m	200	.20	175A	DO7
157	1N4773	5	9.1	.25	1.0m	200	.10	175A	DO7
158	1N4773A	5	9.1	.25	1.0m	200	.10	175A	DO7
159	1N4774	5	9.1	.25	1.0m	200	.05	175A	DO7
160	1N4774A	5	9.1	.25	1.0m	200	.05	175A	DO7
161	02Z9.1A	5	9.1	250m	6.0m	30	6.5	175J	DO35
162	BZX58C9V1	5	9.1	250m	10m	10	6.5	150A	DO7
163	BZY83C9V1	5	9.1	.25	5.0m	10	8	150J	C1g
164	BZY85C9V1	5	9.1	.25 §	5.0m	10	8	150J	A171f
165♦	CD4765	5	9.1	250m	500u	350	1.0	175A	u37a
166♦	CD4765A	5	9.1	250m	500u	350	1.0	175A	u37a
167♦	CD4766	5	9.1	250m	500u	350	500m	175A	u37a
168♦	CD4766A	5	9.1	250m	500u	350	500m	175A	u37a
169♦	CD4767	5	9.1	250m	500u	350	200m	175A	u37a
170♦	CD4767A	5	9.1	250m	500u	350	200m	175A	u37a
171♦	CD4768	5	9.1	250m	500u	350	100m	175A	u37a
172	CD4770	5	9.1	250m	1.0m	200	1.0	175A	u37a
173	CD4770A	5	9.1	250m	1.0m	200	1.0	175A	u37a
174	CD4771	5	9.1	250m	1.0m	200	500m	175A	u37a
175	CD4771A	5	9.1	250m	1.0m	200	0.5	175A	u37a
176	CD4772	5	9.1	250m	1.0m	200	0.2	175A	u37a
177	CD4772A	5	9.1	250m	1.0m	200	0.2	175A	u37a
178	CD4773	5	9.1	250m	1.0m	200	0.1	175A	u37a
179	CD4773A	5	9.1	250m	1.0m	200	0.1	175A	u37a
180	CLVA91A	5	9.1	250m	1.0m	30 †		175	u20j
181	PD6013,A	5†	9.1	.25	5.0m	9.0		150	A109
182	PD6054	5	9.1	.25	5.0m	6.0		150	A2c
183	PD6209	5	9.1	250m	1.0m	100		175A	A109
184	1/4M9.1Z10	10†	9.1	250m	6.9m	10		175J	E204h
185	1N713	10	9.1	250m	12m	7.0	6.0	175A	DO7
186	1N713B	20	9.1	.25	12m	7.0			DO7
187	PTC505	10	9.1	255m†	28m	5.0			A1bc
188	MC6013,A	5†	9.1	.30	10m	19		175	A2m
189	C5D5239	10	9.1	320m	20m			150S	M713a
190	BZX88C9V1	5	9.1	350m	5.0m	15	6.0	175J	A412
191	MA4091	5	9.1	370m	5.0m	15	3.8	200J	DO34
192	MTZ9.1		9.1	400m	20m	10		175J	DO34
193	TZ9.1		9.1	400m	20m	10		175J	DO35
194	1N5529D	1	9.1	400m§	1.0m	45		175A	DO7
195	1N5735D	1	9.1	400m§	10m	15	6.6	200A	DO35
196	1N6090D	1	9.1	400m§	10u	60	7.0	175L	DO7
197	KZ91C	1	9.1	400m§	1.0m	100		175J	DO7
198	LVA91C	1	9.1	400m	1.0m	100		175A	DO7
199	Z5A9.1	1†	9.1	400m§	5.0m	15	8.0	200J	DO7
200	1N5529C	2	9.1	400m§	1.0m	45		175A	DO7
201	1N5735C	2	9.1	400m§	10m	15	6.6	200A	DO35
202	1N6090C	2	9.1	400m§	10u	60	7.0	175L	DO7
203	BZX79B9V1	2	9.1	400m§	5.0m	15	5.5mV	200J	DO35
204	HZ9C1	2	9.1	400m	5.0m	20	4.2mV	175J	DO35
205	HZ9C1L	2	9.1	400m	500u	60	4.1	175J	DO35
206	KZ91B	2	9.1	400m§	1.0m	100		175A	DO7
207	LVA91B	2	9.1	400m	1.0m	100		175A	DO7
208	1N757A	5	9.1	400m	20m	10	5.6	175A	A1
209	1N960B	5	9.1	400m	14m	7.5		175S	A398a
210	1N3517	5	9.1	.40	10m	6.0	5.6	200A	DO7
211	1N4103	5	9.1	400m	.25m	200		200J	DO7
212	1N5529B	5	9.1	400m§	1.0m	45		175A	DO7
213	1N5735B	5	9.1	400m§	10m	15	6.6	200A	DO35
214	1N6090B	5	9.1	400m§	10u	60	7.0	175L	DO7
215	1S2091A	5	9.1	.40	5.0m	15	6.0	150A	A1
216	1S7091,B	5†	9.1	.40	5.0m	20	6.0	150A	A1

SYMBOLS AND CODES EXPLAINED IN INTERPRETER

2. VOLTAGE REFERENCE DIODES - $V_Z \geq 9.1$ V (Cont'd)

IN ORDER OF: (1) REF. VOLTAGE (2) PD MAX (3) TOLERANCE & (4) TYPE NUMBER

LINE No.	4 TYPE No.	3 TOL ± (%)	1 NOM. REF. VOLT. (V)	2 PD @ 25°C MAX (W)	TEST CUR. Izt (A)	DYN. IMP. MAX (Ω)	TEMP. COEFF Tc MAX	TEMP MAX (°C)	DWG. NO.
1	1S7091A	5	9.1	.40	5.0m	15	6.0	150A	A1
2	BZX79C9V1	5	9.1	400m§	5.0m	20	5.5mV	200J	DO35
3	BZX96C9V1	5	9.1	400m	5.0m	10	5.0	150J	DO7
4	CD4103	5	9.1	400m	250u	200	5.0	200J	u39a
5	CD5239B	5	9.1	400m	20m	10	6.8	200J	u39a
6	CH757	5	9.1	400m	20m	6.0	6.8	200J	u10
7	CH4103	5	9.1	400m	250u	200	8.0	200J	u10
8	CH5239	5	9.1	400m	20m	10	6.8	200J	u10
9	GSZ9.1A	5	9.1	400m	20m	10			A69a
10	KZ91A	5	9.1	400m§	1.0m	100		175A	DO7
11	KZ391A	5†	9.1	400m	1.0m	60		175A	DO7
12	LVA91A	5	9.1	400m	1.0m	100		175A	DO7
13	MA1091	5	9.1	400m	5.0m	15	3.8	200J	A24d
14	RD9.1JB	5	9.1	400m	5.0m	30		175J	DO35
15	RD9.1JSB(A)								
		5.0	9.1	400m	5.0m	30	5.3	175J	DO34
16	T-LVA91A	5†	9.1	400m	1.0m	100		175J	DO35
17	T-LVA391A	5†	9.1	400m	1.0m	60		175J	DO35
18	Z5B9.1	5†	9.1	400m§	5.0m	15	8.0	200J	DO7
19	ZMM757A	5.0	9.1	400m§	20m	10	5.6	175J	F139
20	1N757	10	9.1	400m	20m	10	5.6	175A	A1
21	1N960A	10	9.1	400m	14m	7.5		175S	A398a
22	1N5529A	10	9.1	400m§	1.0m			175A	DO7
23	1N6090A	10	9.1	400m§	10u	60	7.0	175L	DO7
24	GSZ9.1	10	9.1	400m	20m	10			A69a
25	ZMM757	10	9.1	400m§	20m	10	5.6	175J	F139
26	1N960	20	9.1	400m	14m	7.5		175S	A398a
27	1N5529	20	9.1	400m§	1.0m			175A	DO7
28	1N6090	20	9.1	400m§	10u	60	7.0	175L	DO7
29	GZA9.1		9.1	500m		10 †	8.1		A159
30	1N5999D	1	9.1	500m	5.0m	10		200J	DO35
31	Z0A9.1	1†	9.1	500m	5.0m	6.0 †	8.0	200J	DO29
32	1N5999C	2	9.1	500m	5.0m	10		200J	DO35
33	HZ9HC1	2	9.1	500m	5.0m	20	4.2mV	175J	DO35
34	1N5239B	5	9.1	500m	20m	6.0	6.8	200A	A398a
35	1N5855B	5	9.1	500m	20m	50		150C	M859
36	1N5999B	5	9.1	500m	5.0m	10		200J	DO35
37	BZX46C9V1	5	9.1	500m	14m	7.5	10	175A	DO35
38	BZX55C9V1	5	9.1	500m	5.0m	10	6.0	175A	DO35
39	BZX83C9V1	5	9.1	500m	5.0m	10	6.0	175A	DO35
40	CD91	5	9.1	500m	1.0m	75		200J	DO7
41	CTZ9.1A	5	9.1	500m	10m	60	600	200	DO35
42	MA5091	5	9.1	500m	5.0m	15	3.8	125J	M990
43	MLL5239B	5.0	9.1	500m§	20m	10	6.8	200J	F140
44	MTZ613,A	5†	9.1	.50	10m	19		175A	A60e
45	PS8912	5	9.1	.50	20m	3.0	6.6	150	A60p
46	RD9.1EB	5	9.1	500m	20m	10	6.1	175J	DO35
47▼	SZP5-9.1-5-1								
		5.0	9.1	500m	1.0m			175	u5a
48▼	SZ.5-9.1-5-25								
		5.0	9.1	500m	25m			175	u5a
49	TS09100	5	9.1	500m	1.0u			200J	DO35
50	Z0B9.1	5†	9.1	500m	5.0m	6.0 †	8.0	200J	DO29
51	ZMM9.1	5†	9.1	500m	5.0m	10	6.5	175J	F135
52	ZMM5239B	5.0	9.1	500m§	20m	10	6.8	200J	F139
53	ZPD9V1	5†	9.1	500m	5.0m	50	5.9mV	175J	DO35
54	ZPD9.1	5	9.1	500m	5.0m	10	6.5	175J	DO35
55	05Z9.1	6.0	9.1	500m	5.0m	20	6.5	175J	DO35
56	BZV55C9V1	7.0	9.1	500m	5.0m	15	5.5	200J	F139
57	BZV60C9V1	7.0	9.1	500m	5.0m	15	5.5	200J	DO34
58	BZX97C9V1	7	9.1	500m	5.0m	10	6.0	175J	DO35
59	1N5239A	10	9.1	500m	20m	6.0	6.8	200A	A398a
60	1N5855A	10	9.1	500m	20m	50		150C	M859
61	1N5999A	10	9.1	500m	5.0m	18		200J	DO35
62	CTZ9.1	10	9.1	500m	10m	60	600	200	DO35
63	CV9	10	9.1	500m	5.0m				TO105
64	MLL5239A	10	9.1	500m§	20m	10	6.8	200J	F140
65	RD9.1EW	10	9.1	500m	20m	8.0		175J	DO34
66♦	SZP5-9.1-10-1								
		10	9.1	500m	1.0m			175	u5a
67▼	SZ.5-9.1-10-25								
		10	9.1	500m	25m			175	u5a
68	ZMM5239A	10	9.1	500m§	20m	10	6.8	200J	F139
69	1N5239	20†	9.1	.50	20m			200A	A398a
70	1N5999	20	9.1	500m	5.0m	18		200J	DO35
71	MLL5239	20	9.1	500m§	20m	10		200J	F140
72▼	SZP5-9.1-20-1								
		20	9.1	500m	1.0m			175	u5a
73▼	SZ.5-9.1-20-25								
		20	9.1	500m	25m			175	u5a
74	ZMM5239	20	9.1	500m§	20m	10	6.8	200J	F139
75	LVA391C	1	9.1	600m	1.0m	60		175A	DO14
76	LNA391B	2	9.1	600m	1.0m	75		175A	DO7
77	LVA391B	2	9.1	600m	1.0m	60		175A	DO14
78	1N4631	5	9.1	.60	14m	700	6.9	200A	DO14
79	GLA91,A,B	5†	9.1	600m	1.0m	75	6.6	175	DO7
80	LNA391A	5	9.1	600m	1.0m	75		175A	DO7
81	LVA391A	5	9.1	600m	1.0m	60		175A	DO14
82	LNA391	10	9.1	600m	1.0m	75		175A	DO7
83	MLNA391B	2	9.1	750m	1.0m	75		175A	A249e
84	1N3678B	5	9.1	750m§	14m	7.5		175S	A1az
85	BZV41C9V1	5	9.1	750m	5.0m	15	6.0	175S	A412
86	MC6113,A	5†	9.1	.75	25m	19		175A	A2d
87	MGLA91,A,B	5†	9.1	750m	1.0m	75	6.6	175A	A249e
88	MLNA391A	5	9.1	750m	1.0m	75		175A	A249e
89	MLV757A	5	9.1	750m	20m	6.0		175A	A2j
90	TSZ9.1	5	9.1	750m	10m	12			TO39
91	1N3678A	10	9.1	750m§	14m	7.5		175S	A1az
92	MLNA391	10	9.1	750m	1.0m	75		175A	A249e
93	1N3678	20	9.1	750m§	14m	7.5		175S	A1az
94	HZ9.1PB		9.1	800m	40m	6.0		175J	DO41
95	DZB9.1		9.1	1.0	10m	30	5.0mV	150J	A298ap
96	GZB9.1		9.1	1.0	10m	30	5.0mV	150J	A298ap
97	GZB9.1C		9.1	1.0		30	5.0mV		A298ap
98	MA2091		9.1	1.0	40m	6.0	5.4	200J	A277r
99	TSC4739CHIP								
			9.1	1.0	28m	5.0			u46
100	LVA1091C	1	9.1	1.0	1.0m	100		175	A266c
101	Z4A9.1	1†	9.1	1.0	50m	3.0	6.5	200J	DO29
102	LVA1091B	2	9.1	1.0	1.0m	100		175	A266c
103	SZ9.1	2†	9.1	1.0	20m	4.0 †	5.3	150A	A3g
104	1N1770A	5	9.1	1.0	50m	3.0		175A	DO13⊠
105	1N3019B	5	9.1	1.0	28m	5.0		175A	A31a
106	1N4161B	5	9.1	1.0 §	28m	5.0		200S	DO29
107	1N4326B	5	9.1	1.0	28m	5.0	5.1	300S	DO7
108	1N4403B	5	9.1	1.0	28m	2.5	5.0	175A	A1cm
109	1N4660	5	9.1	1.0	28m	200	6.8	200A	DO15
110	1N4739A	5	9.1	1.0	28m	5.0		200A	DO41
111	1N5562B	5	9.1	1.0 §	28m	5.0		200A	A60ac
112	APD9.1A,B	5†	9.1	1.0 †	28m	10			A1rx
113	BZV85C9V1	5	9.1	1.0	25m	5.0	5.5mV	200J	DO41
114	BZX78C9V1	5	9.1	1.0	20m	4.0	5.4mV	200J	
115	BZX85C9V1	5	9.1	1.0 §	25m	5.0	7.5	150A	DO41
116	CD4739	5	9.1	1.0	28m	5.0	6.1	200J	u39a
117	CH4739	5	9.1	1.0	28m	5.0	6.1	200J	u10
118	CZ9.1,A,B,D								
		5†	9.1	1.0	40m	13	5.1	175	DO15
119	LVA1091A	5	9.1	1.0	1.0m	100		175	A266c
120	PL9V1Z	5	9.1	1.0	50m	4.0	5.5	150J	
121	PR239-RT	5	9.1	1.0	30m	6.0 †			DO7
122	PS10019B	5	9.1	1.0	28m	5.0		175A	A60p
123	PS10063	5	9.1	1.0	28m	3.0	6.8	150	A60p
124	RD9.1P	5.0	9.1	1.0	5.0m	15	5.8	150J	M1008
125▼	SZ1-9.1-5-1								
		5.0	9.1	1.0	1.0m			175	u5b
126▼	SZ1-9.1-5-25								
		5.0	9.1	1.0	25m			175	u5b
127	TZB9.1B	5	9.1	1.0 §	1.0m		6.8	175A	A1ty
128	UZ8709	5	9.1	1.0	28m	5.0	5.0	175	A380
129	VR9.1,A,B	5†	9.1	1.0	28m	5.0		125A	A1b
130	Z4B9.1	5†	9.1	1.0	50m	3.0	6.5	200J	DO29
131	Z9.1	5†	9.1	1.0	20m	1.9 †	7.0	150A	DO41
132	ZB9.1	5†	9.1	1.0 §	28m	5.0		150A	A1bc
133	ZB9.1B	5	9.1	1.0	28m	5.0		100C	A1bc
134	ZM4739A	5.0	9.1	1.0 §	28m	5.0		200J	F139
135	AW08-9.1B	5.8	9.1	1.0	25m	3.0	5.3	175J	A60au
136	AW08-9.1A	8.3	9.1	1.0	25m	3.0	5.3	175J	A60au
137	1N1770	10	9.1	1.0	50m	3.0		175A	DO13⊠
138	1N3019A	10	9.1	1.0	28m	5.0		175A	A31a
139	1N4161A	10	9.1	1.0 §	28m	5.0		200S	DO29
140	1N4326A	10	9.1	1.0	28m	5.0	5.1	300S	DO7
141	1N4403A	10	9.1	1.0	28m	2.5	5.0	175A	A1cm
142	1N4739	10	9.1	1.0	28m	5.0		200A	DO41
143	1N5562A	10	9.1	1.0 §	28m	5.0		200A	A60ac
144	1Z9.1	10	9.1	1.0	10m	30	5.5	150J	DO15
145▼	SZ1-9.1-10-25								
		10	9.1	1.0	25m			175	u5b
146	TZB9.1A	10	9.1	1.0 §	1.0m		6.8	175A	A1ty
147	UZ8809	10	9.1	1.0	28m	5.0	5.0	175	A380
148	ZB9.1A	10	9.1	1.0	28m	5.0		100C	A1bc
149	ZM4739	10	9.1	1.0 §	28m	5.0		200J	F139
150	1N3019	20	9.1	1.0	28m	5.0		175A	A31a
151	1N4161	20	9.1	1.0 §	28m	5.0		200S	DO29
152	1N4326	20	9.1	1.0	28m	5.0	5.1	300S	DO7
153	1N4403	20	9.1	1.0	28m	2.5		175S	A266a
154	1N5562	20	9.1	1.0 §	28m			200A	A60ac
155▼	SZ1-9.1-10-1								
		20	9.1	1.0	1.0m			175	u5b
156▼	SZ1-9.1-20-25								
		20	9.1	1.0	25m			175	u5b
157	1N4831B	5	9.1	1.2	28m	8.0	6.8	175	DO29
158	1N4831A	10	9.1	1.2	28m	8.0	6.8	175	DO29
159	1N4831	20	9.1	1.2	28m	8.0	6.8	175	DO29
160	BZX61C9V1	5	9.1	1.3	20m	8.0	5.0	175J	DO15
161	BZX87C9V1	5	9.1	1.3	20m	4.0	6.5	200J	A60al
162	BZY97C9V1	5	9.1	1.3	50m	4.0	8.0		A1rx
163	ZD9.1	5	9.1	1.3	50	4.0	5.0	150J	DO13
164	ZY9.1	5	9.1	1.3	50m	4.0	8.0	150J	A1bg
165	ZMY9.1	6	9.1	1.3	50m	4	5.5	200J	F149
166	BZD10C9V1	7	9.1	1.3	50m	4.0	8.0		DO13
167	BZW22C9V1	7	9.1	1.3	50m	4.0	8.0		DO41
168	ZPY9.1	12	9.1	1.3	50m	4.0	8.0	200J	DO41
169	1N5924D	1	9.1	1.5	41m	4.0		200J	DO41
170	1N5924C	2	9.1	1.5	41m	4.0		200J	DO41
171	1N3788B	5	9.1	1.5	41m	4.0	6.8	175S	C14⊠
172	1N4464	5	9.1	1.5	28m	4.0		175A	A60y
173	1N5924B	5	9.1	1.5	41m	4.0		200J	DO41
174	1S4009,A	5†	9.1	1.5	20m	2.1	5.0	150A	DO1
175	BZY96C9V1	5	9.1	1.5	50m	4.5	7.0	175J	DO1
176	MC6313,A	5†	9.1	1.5	100m	18			A1q
177▼	SZ1.5-9.1-5-1								
		5.0	9.1	1.5	1.0m			175	u5b
178	1N3788A	10	9.1	1.5	41m	4.0	6.8	175S	C14⊠
179	1N5924A	10	9.1	1.5	41m	4.0		200J	DO41
180▼	SZ1.5-9.1-10-1								
		10	9.1	1.5	1.0m			175	u5b
181	1N3788	20	9.1	1.5	41m	4.0	6.8	175S	C14⊠
182	1N5924	20	9.1	1.5	41m	4.0		200J	DO41
183▼	SZ1.5-9.1-20-1								
		20	9.1	1.5	1.0m			175	u5b
184	2EZ9.1D5	5	9.1	2.0	55m	2.5		200J	A1ay
185	2VR9.1,A,B	5†	9.1	2.0	55m	4.0			A3e
186	BZV47C9V1	5	9.1	2.0	50m	4.0	5.1	175J	A344r
187	LMZ9.1A	5	9.1	2.0	55m	2.5	6.8	150A	DO41
188	ZBC9.1	5†	9.1	2.0 §	56m	3.0		150A	A1bc
189	ZBC9.1B	5	9.1	2.0	56m	3.0			A1ty
190	2EZ9.1D10	10	9.1	2.0	55m	2.5		200J	A1ay
191	LMZ9.1	10	9.1	2.0	55m	2.5	6.8	150A	DO41
192	ZBC9.1A	10	9.1	2.0	56m	3.0			A1ty
193	2EZ9.1D	20	9.1	2.0	55m	2.5		200J	A1ay
194	1N5019A	5	9.1	2.5	69m	2.4	5.0	150	A1gn
195	BZX70C9V1	5	9.1	2.5	50m	4.0	5.5mV	150J	A171b
196	Z2B9.1	5†	9.1	2.5	50m	3.0	6.5	200J	DO1
197	1N5019	10	9.1	2.5	69m	2.4	5.0	150	A1gn
198	3EZ9.1D1	1.0	9.1	3.0	82m	2.5		150J	A1ay
199	3EZ9.1D2	2.0	9.1	3.0	82m	2.5		150J	A1ay
200	3EZ9.1D3	3.0	9.1	3.0	82m	2.5		150J	A1ay
201	3EZ9.1D4	4.0	9.1	3.0	82	2.5		150J	A1ay
202	1N5066	5	9.1	3.0	75m	3.0		175A	A146u
203	3EZ9.1D5	5	9.1	3.0	82m	2.5		200J	A1ay

SYMBOLS AND CODES EXPLAINED IN INTERPRETER

2. VOLTAGE REFERENCE DIODES - $V_Z \geq 9.1$ V (Cont'd)

IN ORDER OF: (1) REF. VOLTAGE (2) PD MAX (3) TOLERANCE & (4) TYPE NUMBER

LINE No.	4 TYPE No.	3 TOL ± (%)	1 NOM. REF. VOLT. (V)	2 PD @ 25°C MAX (W)	TEST CUR. Izt (A)	DYN. IMP. MAX (Ω)	TEMP. COEFF Tc MAX	TEMP MAX (°C)	DWG. NO.
1	3VR9.1,A,B	5†	9.1	3.0	84m	3.0			A3al
2	BZV16C9V1	5	9.1	3.0	56m	5.0	5.1	175	DO3
3	MZ709	5	9.1	3.0	75m	3.0	5.0	175A	A146j
4	UDZ709	5	9.1	3.0	75m	4.0		175A	A356a
5	UZ709	5	9.1	3.0	75m	3.0	5.0	175A	A380
6	ZCC9.1	5†	9.1	3.0 §	75m	3.0		150A	A1ey
7	ZCC9.1B	5	9.1	3.0	75m	3.0			A1ey
8	3EZ9.1D10	10	9.1	3.0	82m	2.5		200J	A1ay
9	MZ809	10	9.1	3.0	75m	3.0	5.0	175A	A146j
10	UZ809	10	9.1	3.0	75m	3.0	5.0	175A	A380
11	ZCC9.1A	10	9.1	3.0	75m	3.0			A1ey
12	3EZ9.1D	20	9.1	3.0	82m	2.5		200J	A1ay
13	MZ909	20	9.1	3.0	75m	3.0	5.0	175A	A146j
14	UZ909	20	9.1	3.0	75m	3.0	5.0	175A	A380
15▼	BZT03/D9V1	10	9.1	3.2	50m	4.0	8.0	175J	A94g
16	3T9.1,A,B	5†	9.1	3.5	50m	3.0			DO4
17▼	SZ3-9.1-5-1	5.0	9.1	5.0	1.0m			175	u5c
18▼	SZ3-9.1-5-25	5.0	9.1	5.0	25m			175	u5c
19▼	SZ3-9.1-10-1	10	9.1	5.0	1.0m			175	u5c
20▼	SZ3-9.1-10-25	10	9.1	5.0	25m			175	u5c
21▼	SZ3-9.1-20-1	20	9.1	5.0	1.0m			175	u5c
22▼	SZ3-9.1-20-25	20	9.1	5.0	25m			175	u5c
23	RD9.1FB3		9.14	1.0	40m	6.0		175J	A277r
24	KZ492B	1	9.2	400m§	250u	175	6.7	175A	DO7
25	KZ492C	1	9.2	400m§	250u	175	6.7	175A	DO7
26	LVA192B	1	9.2	400m	250u	350	6.6	150A	DO14
27	LVA192C	1	9.2	400m	250u	350	6.6	150A	DO14
28	LVA492B	1	9.2	400m	250u	175	6.6	150A	DO7
29	LVA492C	1	9.2	400m	250u	175	6.6	150A	DO7
30	KZ492A	2	9.2	400m§	250u	175	6.7	175A	DO7
31	LVA192A	2	9.2	400m	250u	350	6.6	150A	DO14
32	LVA492A	2	9.2	400m	250u	175	6.6	150A	DO7
33	T-LVA492A	3†	9.2	400m	250u	175	6.1mV	175J	DO35
34	KZ492	5†	9.2	400m		175	6.1	175A	DO7
35	LVA192	5	9.2	400m	250u	350	6.6	150A	DO14
36	LVA492	5	9.2	400m	250u	175	6.6	150A	DO14
37	EQA02-09CD	8	9.2	500m	20m	10	.05	175J	A1ac
38	BZ092	5	9.2	1.0	30m	6.0	5.7	175J	DO41
39	HZ9C2	2	9.3	400m	5.0m	20	4.2mV	175J	DO35
40	HZ9C2L	2	9.3	400m	500u	60	4.2	175J	DO35
41	USR931	5	9.3	400m	7.5m	20	50m	175A	DO7
42	USR932	5	9.3	400m	7.5m	20	50m	175A	DO7
43	USR933	5	9.3	400m	7.5m	20	50m	175A	DO7
44	USR934	5	9.3	400m	7.5m	20	50m	175A	DO7
45	HZ9HC2	2	9.3	500m	5.0m	20	4.2mV	175J	DO35
46	1N2620	4.3	9.3	.75	10m	15	1.0	75R	A31a
47	1N2620A	4.3	9.3	.75	10m	15	1.0	100R	A31a
48	1N2620B	4.3	9.3	.75	10m	15	1.0	150R	A31a
49	1N2621	4.3	9.3	.75	10m	15	.50	75R	A31a
50	1N2621A	4.3	9.3	.75	10m	15	.50	100R	A31a
51	1N2621B	4.3	9.3	.75	10m	15	.50	150R	A31a
52	1N2622	4.3	9.3	.75	10m	15	.20	75R	A31a
53	1N2622A	4.3	9.3	.75	10m	15	.20	100R	A31a
54	1N2622B	4.3	9.3	.75	10m	15	.20	150R	A31a
55	1N2623	4.3	9.3	.75	10m	15	.10	75R	A31a
56	1N2623A	4.3	9.3	.75	10m	15	.10	100R	A31a
57	1N2623B	4.3	9.3	.75	10m	15	.10	150R	A31a
58	1N2624	4.3	9.3	.75	10m	15	.05	75R	A31a
59	1N2624A	4.3	9.3	.75	10m	15	.05	100R	A31a
60	1N2624B	4.3	9.3	.75	10m	15	.05	150R	A31a
61	HZS9.1JB3	2.5	9.34	400m	5.0m	25		200J	A380d
62	RD9.1JSB3(A)	2.5	9.34	400m	5.0m	30	5.3	175J	DO34
63	RD10EB1		9.35	500m	20m	8		175J	A277b
64	RD10EL1		9.35	500m	1.0m	8.0		175J	A277b
65	RD10EN1		9.35	500m	5.0m	8.0		175J	A277b
66	HZ10EB1	2.4	9.36	500m	20m	6.0		175J	DO35
67	RD9.1MB3	3	9.4	200m	5.0m	30		150	
68	RD9AN		9.4	250m	10m	10		175J	A277b
69	RD9BN		9.4	1.0	40m	5.0		150J	A427
70	1N2163A	2	9.4	1.0	10m	15	500m	70	A41j
71	1N2164A	2	9.4	1.0	10m	15	500m	125	A41j
72	1N2165A	2	9.4	1.0	10m	15	500m	185	A41j
73	1N2166A	2	9.4	1.0	10m	15	100m	70	A41j
74	1N2167A	2	9.4	1.0	10m	15	100m	125	A41j
75	1N2168A	2	9.4	1.0	10m	15	100m	185	A41j
76	1N2169A	2	9.4	1.0	10m	15	50m	70	A41j
77	1N2170A	2	9.4	1.0	10m	15	50m	125	A41j
78	1N2171A	2	9.4	1.0	10m	15	50m	185	A41j
79	1N2163	4	9.4	1.0	10m	15	500m	70	A41j
80	1N2164	4	9.4	1.0	10m	15	500m	125	A41j
81	1N2165	4	9.4	1.0	10m	15	500m	185	A41j
82	1N2166	4	9.4	1.0	10m	15	100m	70	A41j
83	1N2167	4	9.4	1.0	10m	15	100m	125	A41j
84	1N2168	4	9.4	1.0	10m	15	100m	185	A41j
85	1N2169	4	9.4	1.0	10m	15	50m	70	A41j
86	1N2170	4	9.4	1.0	10m	15	50m	125	A41j
87	1N2171	4	9.4	1.0	10m	15	50m	185	A41j
88	BZ094	5	9.4	1.0	30m	6.0	5.8	175J	A60t
89	RD10FB1		9.41	1.0	40m	6.0		175J	A277r
90	RD9CN		9.44	3.0	120m	3.0		150J	S547
91	ZTK9	5	9.5		5.0m	25	200m	150J	DO35
92	HZT9	5.6	9.50	200m§	5.0m	25	1.0	175J	DO35
93	1S1718		9.5	.30	10m	30		125J	
94	KZ495B	1	9.5	400m§	250u	175	6.8	175A	DO7
95	KZ495C	1	9.5	400m§	250u	175	6.8	175A	DO7
96	LVA195B	1	9.5	400m	250u	350	6.8	150A	DO14
97	LVA195C	1	9.5	400m	250u	350	6.8	150A	DO14
98	LVA495B	1	9.5	400m	250u	175	6.8	150A	DO7
99	LVA495C	1	9.5	400m	250u	175	6.8	150A	DO7
100	HZ9C3	2	9.5	400m	5.0m	20	4.2mV	175J	DO35
101	HZ9C3L	2	9.5	400m	500u	60	4.4	175J	DO35
102	KZ495A	2	9.5	400m§	250u	175	6.8	175A	DO7
103	LVA195A	2	9.5	400m	250u	350	6.8	150A	DO14
104	LVA495A	2	9.5	400m	250u	175	6.8	150A	DO7
105	T-LVA495A	3†	9.5	400m	250u	175	6.4mV	175J	DO35
106	KZ495	5†	9.5	400m		175	6.4	175A	DO7
107	LVA195	5	9.5	400m	250u	350	6.8	150A	DO14
108	LVA495	5	9.5	400m	250u	175	6.8	150A	DO14
109	HZ9HC3	2	9.5	500m	5.0m	20	4.2mV	175J	DO35
110	EQA01-10R	10	9.5	500m	15m	8.0	.06	125J	A387
111	1S225	10	9.5	1.0	35m	4.0	5.2	150J	A56a
112	KS196A	5	9.6	200m	10m	18 †	500m	100C	A378
113	KS196B	5	9.6	200m	10m	18 †	250m	100C	A378
114	KS196G	5	9.6	200m	10m	18 †	50m	100C	A378
115	KS196V	5	9.6	200m	10m	18 †	100	100C	A378
116	RD9.1EC	5	9.6	500m	20m	10	6.3	175J	DO35
117	HZ9.1PC		9.6	800m	40m	6.0		175J	DO41
118	BZ096	5	9.6	1.0	30m	7.0	6.0	175J	DO41
119	RD10EB2		9.65	500m	20m	8		175J	A277b
120	RD10EL2		9.65	500m	1.0m	8.0		175J	A277b
121	RD10EN2		9.65	500m	5.0m	8.0		175J	A277b
122	RD9.1FC	5	9.65	1.0	40m	6.0		175J	A297c
123	HZS10JB1	2.4	9.66	400m	5.0m	30		200J	A380d
124	RD10JSB1(A)	2.5	9.66	400m	5.0m	30	6.0	175J	DO34
125	HZ10EB2	2.5	9.66	500m	20m	6.0		175J	DO35
126	RD10MB1	3	9.7	200m	5.0m	30		150	
127	1N1959B	1	9.7	400m	5.0m	22	6.5	150	DO7
128	HZ11A1	2	9.7	400m	5.0m	25	6.0mV	175J	DO35
129	HZ11A1L	2	9.7	400m	500u	80	4.6	175J	DO35
130	1N1959A	5	9.7	400m	5.0m	22	6.5	150	DO7
131	1N1959	10	9.7	400m	5.0m	22	6.5	150	DO7
132	HZ11HA1	2	9.7	500m	5.0m	25	6.0mV	175J	DO35
133	RD10FB2		9.74	1.0	40m	6.0		175J	A277r
134	D814V	8	9.75	340m	5.0m	25 †	9.0	100C	A378
135	RD10EL		9.78	500m	1.0m	8.0		175J	A277b
136	RD10EN		9.78	500m	5.0m	8.0		175J	A277b
137	RD11AL		9.8	250m	5.0m	20		175J	A277b
138	KZ498B	1	9.8	400m§	250u	175	7.0	175A	DO7
139	KZ498C	1	9.8	400m§	250u	175	7.0	175A	DO7
140	LVA198B	1	9.8	400m	250u	350	7.0	150A	DO14
141	LVA198C	1	9.8	400m	250u	350	7.0	150A	DO14
142	LVA498B	1	9.8	400m	250u	175	7.0	150A	DO7
143	LVA498C	1	9.8	400m	250u	175	7.0	150A	DO7
144	KZ498A	2	9.8	400m§	250u	175	7.0	175A	DO7
145	LVA198A	2	9.8	400m	250u	350	7.0	150A	DO14
146	LVA498A	2	9.8	400m	250u	175	7.0	150A	DO7
147	T-LVA498A	3†	9.8	400m	250u	175	6.8mV	175J	DO35
148	KZ498	5†	9.8	400m		175	6.8	175A	DO7
149	LVA198	5	9.8	400m	250u	350	7.0	150A	DO14
150	LVA498	5	9.8	400m	250u	175	7.0	150A	DO14
151	EQA02-10AB	1	9.8	500m	20m	10	.06	175J	A1ac
152	EQA01-10	15	9.8	500m	15m	8.0	.06	125J	A387
153	RD11BL		9.8	1.0	20m	6.0		150J	A427
154	BZ098	5	9.8	1.0	30m	7.0	6.0	175J	DO41
155	EQB01-10	15	9.8	1.0	30m	5.0	.06	140J	A21b
156	RD11CL		9.8	3.0	60m	4.0		150J	S547
157	HZ11A2	2	9.9	400m	5.0m	25	6.0mV	175J	DO35
158	HZ11A2L	2	9.9	400m	500u	80	4.8	175J	DO35
159	BZY88C10	5	9.9	400m	5.0m	25	7.0	200J	DO7
160	HZ11HA2	2	9.9	500m	5.0m	25	6.0mV	175J	DO35
161	3KZ11	10†	9.90	3.0 §	125m		.07		A3ak§
162	RD10EB3		9.95	500m	20m	8		175J	A277b
163	RD10EL3		9.95	500m	1.0m	8.0		175J	A277b
164	RD10EN3		9.95	500m	5.0m	8.0		175J	A277b
165	HZ10EB3	2.5	9.95	500m	20m	6.0		175J	DO35
166	HZS10JB2	2.5	9.99	400m	5.0m	30		200J	A380d
167	RD10JSB2(A)	2.5	9.99	400m	5.0m	30	6.0	175J	DO34

$V_Z \geq 10$ V

LINE No.	TYPE No.	TOL ± (%)	NOM. REF. VOLT. (V)	PD @ 25°C MAX (W)	TEST CUR. Izt (A)	DYN. IMP. MAX (Ω)	TEMP. COEFF Tc MAX	TEMP MAX (°C)	DWG. NO.
171	TZPD10		10		5.0m	15	7.0		DO35
172	TZPY10		10		50m	4.0	7.0		DO41
173	BZV49C10	5	10		5.0m	15	3.0	150J	M1008
174	CD4740A	5.0	10		25m	7.0		200	u52
175	CD5347B	5	10		125m	2.0	7.1	200J	u39b
176	MMBZ5240	5	10		10m	10			M500
177	NC10	5	10		5.0m	20	6.5		u47
178	PS1511	5	10		5.0m	15	5.0	150A	A1gd
179	PS1512	5	10		5.0m	15	4.0	150A	A1gd
180	PS1513	5	10		5.0m	15	3.0	150A	A1gd
181	PS1514	5	10		5.0m	15	2.0	150A	A1gd
182	PS1515	5	10		5.0m	15	1.0	150A	A1gd
183	PS1516	5	10		5.0m	15	.50	150A	A1gd
184	PS1517	5	10		5.0m	15	.25	150A	A1gd
185▼	TMPZ5240	5.0	10		20m	22			TO236Ø
186	TSC6091CHIP	5	10		1.0m				u46
187	BZX55D10	10	10		5.0m	15			A1ct
188	DSZ3010	10	10		75m	4.0	6.0		A266
189	1N1986B	1	10	150m	5.0m	22	6.5	150	C1
190	1N1986A	5	10	150m	5.0m	22	6.5	150	C1
191	MA3100	5.0	10	150m	5.0m	20	4.5	125J	M713b
192	1N1986	10	10	150m	5.0m	22	6.5	150	C1
193	RD10MB		10	200m	5.0m	30		150J	M500c
194	1N1932B	1	10	200m	5.0m	22	6.5	150A	A82e
195	RD10MB2	3	10	200m	5.0m	30		150	
196	1N1932A	5	10	200m	5.0m	22	6.5	150A	A82e
197	BZX84C10	5	10	200m	5.0m	20	7.0	150J	M500d
198	ESZ10	5	10	200m	10m	8.0 †			TO106
199	MSZ10	5	10	200m	5m	10 †			C202
200	1N1932	10	10	200m	5.0m	22	6.5	150A	A82e
201	CZ10	10	10	200m	5.0m				TO106
202	1N714A	5	10	250m	12m	8.0	6.1	175A	DO7
203	1N765A	5†	10	250m	5.0m	45	6.0	150	DO7
204	1N4697	5	10	.25	.05m			200A	DO14
205	02Z10A	5	10	250m	6.0m	35	7.0	175J	DO35
206	BZX58C10	5	10	250m	10m	15	7.0	150A	DO7
207	BZY83C10	5	10	.25	5.0m	15	8	150J	C1g
208	BZY85C10	5	10	.25 §	5.0m	15	8	150J	A171f
209	CLVA100A	5	10	250m	1.0m	40 †		175	u20j
210	PD6014,A	5†	10	.25	5.0m	10		150	A109

SYMBOLS AND CODES EXPLAINED IN INTERPRETER

2. VOLTAGE REFERENCE DIODES - $V_Z \geq 10$ V (Cont'd)

IN ORDER OF: (1) REF. VOLTAGE (2) PD MAX (3) TOLERANCE & (4) TYPE NUMBER

LINE No.	4 TYPE No.	3 TOL ± (%)	1 NOM. REF. VOLT. (V)	2 PD @ 25°C MAX (W)	TEST CUR. Izt (A)	DYN. IMP. MAX (Ω)	TEMP. COEFF Tc MAX	TEMP MAX (°C)	DWG. NO.
1	PD6055	5	10	.25	5.0m	8.0		150	A2c
2	PD6210	5	10	250m	1.0m	100		175A	A109
3	SZ10	6	10	.25	5.0m	25	.80	150J	C1f
4	1/4M10Z10	10†	10	250m	6.3m	11		175J	E204h
5	1N714	10	10	250m	12m	8.0	6.1	175A	DO7
6	BZY83D10	10	10	.25	5.0m	15	8	150J	C1g
7	PTC506	10	10	250m†	25m	7.0			A1bc
8	1N714B	20	10	.25	12m	8.0			DO7
9	BZ758	5	10	300m	20m	17	7.5	175S	u35
10	BZ758F	5	10	300m	20m	17	7.5	175S	TO86
11	BZ758T	5	10	300m	20m	17	7.5	175S	TO18
12	MC6014,A	5†	10	.30	10m	21		175	A2m
13	C5D5240	10	10	320m	20m			150S	M713a
14	BZX88C10	5	10	350m	5.0m	20	6.5	175J	A412
15	MA4100	5	10	370m	5.0m	20	4.5	200J	DO34
16	MTZ10		10	400m	20m	10		175J	DO34
17	TZ10		10	400m	20m	10		175J	DO35
18	1N4295A	1	10	400m	10m	20	1.2	175S	A31e
19	1N5530D	1	10	400m§	1.0m	60		175A	DO7
20	1N5736D	1	10	400m§	10m	20	7.0	200A	DO35
21	1N6091D	1	10	400m§	10u	60	7.5	175L	DO7
22	KZ100C	1	10	400m§	1.0m	100		175J	DO7
23	LVA100C	1	10	400m	1.0m	100		175A	DO7
24	Z5A10	1†	10	400m§	5.0m	15	8.0	200J	DO7
25	1N4295	2	10	400m	10m	20	1.2	175S	A31e
26	1N5530C	2	10	400m§	1.0m	60		175A	DO7
27	1N5736C	2	10	400m§	10m	20	7.0	200A	DO35
28	1N6091C	2	10	400m§	10u	60	7.5	175L	DO7
29	BZX79B10	2	10	400m§	5.0m	20	6.4mV	200J	DO35
30	KZ100B	2	10	400m§	1.0m	100		175A	DO7
31	LVA100B	2	10	400m	1.0m	100		175A	DO7
32	.4M10AZ10,5	5†	10	400m	20m	17		175J	DO7Ø
33	1N701	5	10	400m	5.0m	15	5.5	150A	A87
34	1N758A	5	10	400m	20m	17	6.0	175A	A1
35	1N961B	5	10	400m	12m	8.5		175S	A398a
36	1N3518	5	10	.40	10m	7.0	6.0	200A	DO7
37	1N4104	5	10	400m	.25m	200		200J	DO7
38	1N5530B	5	10	400m§	1.0m	60		175A	DO7
39	1N5736B	5	10	400m§	10m	20	7.0	200A	DO35
40	1N6091B	5	10	400m§	10u	60	7.5	175L	DO7
41	1S2100A	5	10	.40	5.0m	20	6.5	150A	A1
42	1S7100,B	5†	10	.40	5.0m	40	6.5	150A	A1
43	1S7100A	5	10	400m	5.0m	20	6.5	150A	A1
44	BZX79C10	5	10	400m§	5.0m	20	6.4mV	200J	DO35
45	BZX96C10	5	10	400m	5.0m	15	5.5	150J	DO7
46	CD758A	5	10	400m	20m	17	6.2	200J	u39a
47	CD4104	5	10	400m	250u	200	5.5	200J	u39a
48	CD5240B	5	10	400m	20m	17	7.5	200J	u39a
49	CH758	5	10	400m	20m	7.0	7.5	200J	u10
50	CH4104	5	10	400m	250u	200	8.0	200J	u10
51	CH5240	5	10	400m	20m	17	7.5	200J	u10
52	GSZ10A	5	10	400m	20m	10			A69a
53	KZ100A	5	10	400m§	1.0m	100		175A	DO7
54	KZ3100A	5†	10	400m	1.0m	60		175A	DO7
55	LVA100A	5	10	400m	1.0m	100		175A	DO7
56	MA1100	5	10	400m	5.0m	20	4.5	200J	A24d
57	MZL310	5	10	400m	500u	80	6.4	175J	DO35
58	RD10JB	5	10	400m	5.0m	30		175J	DO35
59	RD10JSB(A)	5.0	10.0	400m	5.0m	30	6.0	175J	DO34
60	T-LVA100A	5†	10	400m	1.0m	100		175J	DO35
61	T-LVA3100A	5†	10	400m	1.0m	60		175J	DO35
62	Z5B10	5†	10	400m§	5.0m	15	8.0	200J	DO7
63	ZMM758A	5.0	10.0	400m§	20m	17	6.0	175J	F139
64	1N758	10	10	400m	20m	17	6.0	175A	A1
65	1N961A	10	10	400m	12m	8.5		175S	A398a
66	1N5530A	10	10	400m§	1.0m			175A	DO7
67	1N6091A	10	10	400m§	10u	60	7.5	175L	DO7
68	1S2100	10	10	.40	5.0m	40	6.5	150A	A1
69	GSZ10	10	10	400m	20m	10			A69a
70	ZMM758	10	10.0	400m§	20m	17	6.0	175J	F139
71	1N961	20	10	400m	12m	8.5		175S	A398a
72	1N5530	20	10	400m§	1.0m			175A	DO7
73	1N6091	20	10	400m§	10u	60	7.5	175L	DO7
74	GZA10		10	500m		15 †	8.5		A159
75	1N6000D	1	10	500m	5.0m	15		200J	DO35
76	Z0A10	1†	10	500m	5.0m	8.0 †	8.0	200J	DO29
77	1N6000C	2	10	500m	5.0m	15		200J	DO35
78	1N5240B	5	10	500m	20m	7.0	7.5	200A	A398a
79	1N5856B	5	10	500m	20m	62		150C	M859
80	1N6000B	5	10	500m	5.0m	15		200J	DO35
81	BZX46C10	5	10	500m	12m	8.5	11	175A	DO35
82	BZX55C10	5	10	500m	5.0m	15	6.5	175A	DO35
83	BZX55C10V	5	10	500m	5.0m	15	6.0mV	175J	DO35
84	BZX83C10	5	10	500m	5.0m	15	6.5	175A	DO35
85	BZY88C10V	5	10	500m	5.0m	25	7.0m	175	DO35
86	CTZ10A	5	10	500m	10m	70	600	200	DO35
87	MA5100	5	10	500m	5.0m	20	4.5	125J	M990
88	MLL5240B	5.0	10	500m§	20m	17	7.5	200J	F140
89	MTZ614,A	5†	10	.50	10m	21		175A	A60e
90	MZ310,A,B,C	5	10	500m	10m	20	6.5	175J	DO35
91	PS8913	5	10	.50	20m	4.0	7.0	150	A60p
92	RD10EB	5	10	500m	20m	10	6.5	175J	DO35
93▼	SZP5-10-5-1	5.0	10	500m	1.0m			175	u5a
94▼	SZ.5-10-5-25	5.0	10	500m	25m			175	u5a
95	TS10000	5	10	500m	1.0u			200J	DO35
96	Z0B10	5†	10	500m	5.0m	8.0 †	8.0	200J	DO29
97	ZMM5240B	5.0	10	500m§	20m	17	7.5	200J	F139
98	ZPD10	5	10	500m	5.0m	15	6.5	175J	DO35
99	ZPD10V	5†	10	500m	5.0m	70	6.5mV	175J	DO35
100	05Z10	6.0	10	500m	5.0m	25	7.0	175J	DO35
101	BZX97C10	6	10	500m	5.0m	15	6.5	175J	DO35
102	ZMM10	6†	10	500m	5.0m	15	6.5	175J	F135
103	BZV55C10	6.3	10	500m	5.0m	20	6.4	200J	F139
104	BZV60C10	6.3	10	500m	5.0m	20	6.4	200J	DO34
105	EQA01-10S	9	10	500m	15m	8.0	.06	125J	A387
106	1N3402	10	10	500m	10m	15	4.0	200S	P5
107	1N3415	10	10	.50	1.0m	80	3.5	200A	P5
108	1N5240A	10	10	500m	20m	7.0	7.5	200A	A398a
109	1N5856A	10	10	500m	20m	62		150C	M859
110	1N6000A	10	10	500m	5.0m	22		200J	DO35
111	CTZ10	10	10	500m	10m	70	600	200	DO35
112	MLL5240A	10	10	500m§	20m	17	7.5	200J	F140
113▼	SZP5-10-10-1	10	10	500m	1.0m			175	u5a
114▼	SZ.5-10-10-25								
115	ZMM5240A	10	10	500m§	20m	17	7.5	200J	F139
116	1N5240	20†	10	.50	20m			200A	A398a
117	1N6000	20	10	500m	5.0m	22		200J	DO35
118	MLL5240	20	10	500m§	20m	17		200J	F140
119▼	SZP5-10-20-1	20	10	500m	1.0m			175	u5a
120▼	SZ.5-10-20-25	20	10	500m	25m			175	u5a
121	ZMM5240	20	10	500m§	20m	17	7.5	200J	F139
122	BZX83C10V	5†	10	550m	5.0m	70	7.0mV	175J	DO35
123	LVA3100C	1	10	600m	1.0m	60		175A	DO14
124	LNA3100B	2	10	600m	1.0m	75		175A	DO7
125	LVA3100B	2	10	600m	1.0m	60		175A	DO14
126	1N4632	5	10	.60	13m	700	7.1	200A	DO14
127	GLA100,A,B	5†	10	600m	1.0m	75	7.0	175	DO7
128	LNA3100A	5	10	600m	1.0m	75		175A	DO7
129	LVA3100A	5	10	600m	1.0m	60		175A	DO14
130	LNA3100	10	10	600m	1.0m	75		175A	DO7
131	MLNA3100B	2	10	750m	1.0m	75		175A	A249e
132	1N1512A	5	10	750m	15m	3.2	7.0	200S	DO12
133	1N2036A	5	10	.75	10m	50	6.0	150J	DO12
134	1N3679B	5	10	750m§	13m	8.5		175S	A1az
135	BZV41C10	5	10	750m	5.0m	20	6.5	175S	A412
136	MC6114,A	5†	10	.75	25m	21		175A	A2d
137	MGLA100,A,B	5†	10	750m	1.0m	75	7.0	175A	A249e
138	MLNA3100A	5	10	750m	1.0m	75		175A	A249e
139	MLV758A	5	10	750m	20m	7.0		175A	A2j
140	TSZ10	5	10	750m	10m	12			TO39
141	1N1512	10	10	750m	15m	3.2	7.0	200S	DO12
142	1N3679A	10	10	750m§	13m	8.5		175S	A1az
143	MLNA3100	10	10	750m	1.0m	75		175A	A249e
144	1N3679	20	10	750m§	13m	8.5		175S	A1az
145	HZ10PB		10	800m	40m	6.0		175J	DO41
146	HZ10PC		10	800m	40m	6.0		175J	DO41
147	AP10.0A,B		10	1.0 †	20m	35			DO35
148	DZB10		10	1.0	10m	30	6.0mV	150J	A298ap
149	GZB10		10	1.0	10m	30	6.0mV	150J	A298ap
150	GZB10C		10	1.0		30	6.0mV		A298ap
151	MA2100		10	1.0	40m	6.0	6.3	200J	A277r
152	RD10FB3		10.0	1.0	40m	6.0		175J	A277r
153	TSC4740CHIP		10	1.0	25m	7.0			u46
154	1N1876B	1	10	1.0	25m	1.3 †	5.8	175A	DO13
155	1N4296A	1	10	1.0	20m	10	1.2	175S	A31a
156	Z4A10	1†	10	1.0	50m	4.0	7.0	200J	DO29
157	1N4296	2	10	1.0	20m	10	1.2	175S	A31a
158	LVA10100B	2	10	1.0	1.0m	100		175	A266c
159	1N1523A	5	10	1.0	20m	4.0	7.0	200S	DO3
160	1N1744	5	10	1.0	20m	6.0 †	5.5	200A	A154
161	1N1771A	5	10	1.0	50m	3.5		175A	DO13Ø
162	1N1876A	5	10	1.0	25m	6.0	5.8	200C	A41e
163	1N3020B	5	10	1.0	25m	7.0		175A	A31a
164	1N4162B	5	10	1.0 §	25m	7.0		200S	DO29
165	1N4327B	5	10	1.0	25m	7.0	5.5	300S	DO7
166	1N4404B	5	10	1.0	25m	3.0	5.5	175A	A1cm
167	1N4661	5	10	1.0	25m	300	7.1	200A	DO15
168	1N4740A	5	10	1.0	25m	7.0		200A	DO41
169	1N5563B	5	10	1.0 §	25m	7.0		200A	A60ac
170	ASZ10	5†	10	1.0	20m	10 †			A3ah
171	BZ100	5	10	1.0	30m	7.0	6.0	175J	A60t
172	BZV85C10	5	10	1.0	25m	8.0	6.6mV	200J	DO41
173	BZX78C10	5	10	1.0	20m	5.0	6.3mV	200J	
174	BZX85C10	5	10	1.0 §	25m	7.0	8.0	150A	DO41
175	CD4740	5	10	1.0	25m	7.0	6.2	200J	u39a
176	CH4740	5	10	1.0	25m	7.0	6.2	200J	u10
177	CZ10,A,B,D	5†	10	1.0	40m	14	5.5	175	DO15
178	LVA10100A	5	10	1.0	1.0m	100		175	A266c
179	MZ410,A,B,C	5	10	1.0	20	8.0	6.4	175J	DO41
180	PL10Z	5	10	1.0	50m	4.0	6.0	150J	
181	PR240-RT	5	10	1.0	30m	7.0 †			DO7
182	PS10020B	5	10	1.0	25m	7.0		175A	A60p
183	PS10064	5	10	1.0	25m	4.0	7.3	150	A60p
184	RD10P	5.0	10	1.0	5.0m	20	6.3	150J	M1008
185▼	SZ1-10-5-1	5.0	10	1.0	1.0m			175	u5b
186▼	SZ1-10-5-25	5.0	10	1.0	25m			175	u5b
187	SZ10.0	5†	10	1.0	20m	6.0 †	5.5	150A	A3g
188	TZB10B	5	10	1.0 §	1.0m		7.3	175A	A1ty
189	UZ8710	5	10	1.0	25m	7.0	6.0	175	A380
190	VR10,A,B	5†	10	1.0	25m	7.0		125A	A1b
191	Z4B10	5†	10	1.0	50m	4.0	7.0	200J	DO29
192	Z10.0	5†	10	1.0	20m	2.0 †	7.0	150A	DO41
193	ZB10	5†	10	1.0 §	25m	7.0		150A	A1bc
194	ZB10B	5	10	1.0	25m	7.0		100C	A1bc
195	ZM4740A	5.0	10	1.0 §	25m	7.0		200J	F139
196	AW08-10B	5.2	10	1.0	25m	5.0	5.8	175J	A60au
197	AW01-10	6	10	1.0	25m	5.0	5.8	150J	A333
198	RD10FB	6	10	1.0	40m	6.0		175J	A297c
199	AW08-10A	8.6	10	1.0	25m	5.0	5.8	175J	A60au
200	1N1523	10	10	1.0	20m	4.0	7.0	200S	DO3
201	1N1771	10	10	1.0	50m	3.5		175A	DO13Ø
202	1N1876	10	10	1.0	25m	6.0	5.8	200C	A41e
203	1N3020A	10	10	1.0	25m	7.0		175A	A31a
204	1N4162A	10	10	1.0 §	25m	7.0		200S	DO29
205	1N4327A	10	10	1.0	25m	7.0	5.5	300S	DO7
206	1N4404A	10	10	1.0	25m	3.0	5.5	175A	A1cm
207	1N4740	10	10	1.0	25m	7.0		200A	DO41
208	1N5563A	10	10	1.0 §	25m	7.0		200A	A60ac

SYMBOLS AND CODES EXPLAINED IN INTERPRETER

2. VOLTAGE REFERENCE DIODES - $V_Z \geq 10$ V (Cont'd)

IN ORDER OF: (1) REF. VOLTAGE (2) PD MAX (3) TOLERANCE & (4) TYPE NUMBER

LINE No.	4 TYPE No.	3 TOL ± (%)	1 NOM. REF. VOLT. (V)	2 PD @ 25°C MAX (W)	TEST CUR. Izt (A)	DYN. IMP. MAX (Ω)	TEMP. COEFF Tc MAX	TEMP MAX (°C)	DWG. NO.
1	1Z10	10	10	1.0	10m	30	6.0	150J	DO15
2	KS510A	10	10	1.0 §	5.0m	25 †		100A	A378
3▼	SZ1-10-10-1								
		10	10	1.0	1.0m			175	u5b
4▼	SZ1-10-10-25								
		10	10	1.0	25m			175	u5b
5	TZB10A	10	10	1.0 §	1.0m		7.3	175A	A1ty
6	UZ8810	10	10	1.0	25m	7.0	6.0	175	A380
7	ZB10A	10	10	1.0	25m	7.0		100C	A1bc
8	ZM4740	10	10	1.0 §	25m	7.0		200J	F139
9	1N3020	20	10	1.0	25m	7.0		175A	A31a
10	1N4162	20	10	1.0 §	25m	7.0		200S	DO29
11	1N4327	20	10	1.0	25m	7.0	5.5	300S	DO7
12	1N4404	20	10	1.0	25m	3.0		175S	A266a
13	1N5563	20	10	1.0 §	25m			200A	A60ac
14▼	SZ1-10-20-1								
		20	10	1.0	1.0m			175	u5b
15▼	SZ1-10-20-25								
		20	10	1.0	25m			175	u5b
16	1N4832B	5	10	1.2	25m	9.0	7.1	175	DO29
17	1N4832A	10	10	1.2	25m	9.0	7.1	175	DO29
18	1N4832	20	10	1.2	25m	9.0	7.1	175	DO29
19	BZX61C10	5	10	1.3	20m	8.5	5.0	175J	DO15
20	BZX85C10V	5†	10	1.3	25m	200	6.0mV	175J	DO41
21	BZX87C10	5	10	1.3	20m	5.0	7.0	200J	A60al
22	BZY97C10	5	10	1.3	50m	4.0	9.0		A1rx
23	ZD10	5	10	1.3	50	4.0	6.0	150J	DO13
24	ZY10	5	10	1.3	50m	4.0	8.0	150J	A1bg
25	BZD10C10	6	10	1.3	50m	4.0	9.0		DO13
26	BZW22C10	6	10	1.3	50m	4.0	9.0		DO41
27	SZL10	6	10	1.3	50m	3.5		150J	S442
28	ZMY10	6	10	1.3	50m	4	7	200J	F149
29	ZPY10	12	10	1.3	50m	4.0	9.0	200J	DO41
30	1N5925D	1	10	1.5	37m	4.5		200J	DO41
31	1N5925C	2	10	1.5	37m	4.5		200J	DO41
32	1N3789B	5	10	1.5	37m	5.0	7.1	175S	C14Ø
33	1N4465	5	10	1.5	25m	5.0		175A	A60y
34	1N5925B	5	10	1.5	37m	4.5		200J	DO41
35	1S4010,A	5†	10	1.5	20m	2.3	5.5	150A	DO1
36	BZY95C10	5	10	1.5	50m	4.0	7.0	175J	DO1
37	BZY96C10	5	10	1.5	50m	5.0	8.0	175J	DO1
38	BZY97C10V	5†	10	1.5	50m	4.0	7.0mV	150J	A1bg
39	MC6314,A	5†	10	1.5	100m	20			A1q
40▼	SZ1.5-10-5-1								
		5.0	10	1.5	1.0m			175	u5b
41	SZ10C	5	10	1.5	20m	20	6.0	160A	A26
42	1N3789A	10	10	1.5	37m	5.0	7.1	175S	C14Ø
43	1N5925A	10	10	1.5	37m	4.5		200J	DO41
44▼	SZ1.5-10-10-1								
		10	10	1.5	1.0m			175	u5b
45	1N3789	20	10	1.5	37m	5.0	7.1	175S	C14Ø
46	1N5925	20	10	1.5	37m	4.5		200J	DO41
47▼	SZ1.5-10-20-1								
		20	10	1.5	1.0m			175	u5b
48	2EZ10D5	5	10	2.0	50m	3.5		200J	A1ay
49	2VR10,A,B	5†	10	2.0	50m	5.0			A3e
50	BZV47C10	5	10	2.0	50m	4.0	5.5	175J	A344r
51	LMZ10A	5	10	2.0	50m	3.5	7.1	150A	DO41
52	ZBC10	5†	10	2.0 §	50m	4.0		150A	A1bc
53	ZBC10B	5	10	2.0	50m	4.0			A1ty
54	2EZ10D10	10	10	2.0	50m	3.5		200J	A1ay
55	LMZ10	10	10	2.0	50m	3.5	7.1	150A	DO41
56	ZBC10A	10	10	2.0	50m	4.0			A1ty
57	2EZ10D	20	10	2.0	50m	3.5		200J	A1ay
58	BZV15C10	5	10	2.2	1.0	500m	9.0	150J	M754Ø
59	1N5020A	5	10	2.5	62m	3.0	5.5	150	A1gn
60	BZX70C10	5	10	2.5	50m	4.0	7.0mV	150J	A171b
61	Z2B10	5†	10	2.5	50m	4.0	7.0	200J	DO1
62	AU01-10	6	10	2.5	65m	5.0	6.7	165J	A333b
63	1N5020	10	10	2.5	62m	3.0	5.5	150	A1gn
64	3EZ10D1	1.0	10	3.0	75m	3.5		150J	A1ay
65	3EZ10D2	2.0	10	3.0	75m	3.5		150J	A1ay
66	3EZ10D3	3.0	10	3.0	75m	3.5		150J	A1ay
67	3EZ10D4	4.0	10	3.0	75	3.5		150J	A1ay
68	1N5067	5	10	3.0	75m	4.0		175A	A146u
69	3EZ10D5	5	10	3.0	75m	3.5		200J	A1ay
70	3VR10,A,B	5†	10	3.0	75m	4.0			A3al
71	BZV16C10	5	10	3.0	50m	7.0	5.5	175	DO3
72	MZ710	5	10	3.0	75m	4.0	6.0	175A	A146j
73	UDZ710	5	10	3.0	75m	5.0		175A	A356a
74	UZ710	5	10	3.0	75m	4.0	6.0	175A	A380
75	ZCC10	5†	10	3.0 §	75m	4.0		150A	A1ey
76	ZCC10B	5	10	3.0	75m	4.0			A1ey
77	3EZ10D10	10	10	3.0	75m	3.5		200J	A1ay
78	MZ810#B	10	10	3.0	75m	4.0	6.0	175A	A146j
79	UZ810	10	10	3.0	75m	4.0	6.0	175A	A380
80	ZCC10A	10	10	3.0	75m	4.0			A1ey
81	3EZ10D	20	10	3.0	75m	3.5		200J	A1ay
82	MZ910	20	10	3.0	75m	4.0	6.0	175A	A146j
83	UZ910	20	10	3.0	75m	4.0	6.0	175A	A380
84▼	BZT03/D10	10	10	3.2	50m	4.0	9.0	175J	A94g
85	1N1593A	5	10	3.5	70m	2.5	7.0	200S	DO4
86	1N1593	10	10	3.5	70m	2.5	7.0	200S	DO4
87▼	SZ3-10-5-1	5.0	10	5.0	1.0m			175	u5c
88▼	SZ3-10-5-25								
		5.0	10	5.0	25m			175	u5c
89▼	SZ3-10-10-1								
		10	10	5.0	1.0m			175	u5c
90▼	SZ3-10-10-25								
		10	10	5.0	25m			175	u5c
91▼	SZ3-10-20-1								
		20	10	5.0	1.0m			175	u5c
92▼	SZ3-10-20-25								
		20	10	5.0	25m			175	u5c
93	RD11AM		10.1	250m	5.0m	20		175J	A277b
94	HZ11A3	2	10.1	400m	5.0m	25	6.0mV	175J	DO35
95	HZ11A3L	2	10.1	400m	500u	80	4.8	175J	DO35
96	RD10EL4		10.1	500m	1.0m	8.0		175J	A277b
97	HZ11HA3	2	10.1	500m	5.0m	25	6.0mV	175J	DO35
98	CD100	5	10.1	500m	1.0m	75		200J	DO7
99	APD10.0A,B	5†	10.1	1.0 †	25m	10			A1rx
100	HZ10EC	2.5	10.2	500m	20m	6.0		175J	DO35
101	RD10JSB3(A)								
		2.5	10.3	400m	5.0m	30	6.0	175J	DO34
102	HZS10JB3	2.6	10.3	400m	5.0m	30		200J	A380d
103	RD10MB3	3	10.4	200m	5.0m	30		150	
104	HZ11B1	2	10.4	400m	5.0m	25	6.0mV	175J	DO35
105	HZ11B1L	2	10.4	400m	500u	80	4.9	175J	DO35
106	RD11EB1		10.4	500m	10m	10		175J	A277b
107	RD11EL1		10.4	500m	1.0m	10		175J	A277b
108	RD11EN1		10.4	500m	5.0m	10		175J	A277b
109	HZ11HB1	2	10.4	500m	5.0m	25	6.0mV	175J	DO35
110	HZ11EB1	2.4	10.4	500m	20m	10		175J	DO35
111	RD11BM		10.4	1.0	20m	6.0		150J	A427
112	RD11FB1		10.4	1.0	20m	8.0		175J	A277r
113	RD11CM		10.4	3.0	60m	4.0		150J	S547
114	1N1314A	5	10.5	150m	200u			150A	C1
115	1N1314	10	10.5	150m	200u			150A	C1
116	RD11A	10	10.5	.20	5.0m	25	7.0	150S	A1dw
117	RD11AK		10.5	250m	5.0m	20		175J	A277b
118	1N765	10	10.5	250m	5.0m	45		150A	A398
119	1N2036	10	10.5	750m	5.0m	50		150A	DO12
120	RD11BK		10.5	1.0	20m	6.0		150J	A427
121	BZ105	5	10.5	1.0	20m	8.0	6.3	175J	DO41
122	RD11CK		10.5	3.0	60m	4.0		150J	S547
123	HZ11B2	2	10.6	400m	5.0m	25	6.0mV	175J	DO35
124	HZ11B2L	2	10.6	400m	500u	80	4.9	175J	DO35
125	RD11JSB1(A)								
		2.5	10.6	400m	5.0m	30	6.3	175J	DO34
126	HZ11HB2	2	10.6	500m	5.0m	25	6.0mV	175J	DO35
127	RD10EC	5	10.6	500m	20m	10	6.7	175J	DO35
128	EQA02-33AC	8	10.6	500m	20m	10	.06	175J	A1ac
129	EQA01-11R	10	10.6	500m	15m	12	.06	125J	A387
130	RD10FC	5	10.6	1.0	40m	6.0		175J	A297c
131	RD11MB1	3	10.7	200m	5.0m	30		150	
132	HZS11JB1	2.5	10.7	400m	5.0m	30		200J	A380d
133	RD11EB2		10.7	500m	10m	10		175J	A277b
134	RD11EL2		10.7	500m	1.0m	10		175J	A277b
135	RD11EL		10.7	500m	1.0m	10		175J	A277b
136	RD11EN2		10.7	500m	5.0m	10		175J	A277b
137	RD11EN		10.7	500m	5.0m	10		175J	A277b
138	HZ11EB2	2.5	10.7	500m	20m	10		175J	DO35
139	RD11FB2		10.8	1.0	20m	8.0		175J	A277r
140	3KZ12	10†	10.8	3.0 §	100m		.07		A3ak§
141	HZ11B3	2	10.9	400m	5.0m	25	6.0mV	175J	DO35
142	HZ11B3L	2	10.9	400m	500u	80	5.0	175J	DO35
143	HZ11LHB3	2	10.9	400m	500u	80		175J	DO35
144	RD11JSB2(A)								
		2.5	10.9	400m	5.0m	30	6.3	175J	DO34
145	BZY88C11	5	10.9	400m	5.0m	25	7.9	200J	DO7
146	HZ11HB3	2	10.9	500m	5.0m	25	6.0mV	175J	DO35
147	TZPD11		11		5.0m	20	7.0		DO35
148	TZPY11		11		50m	7.0	8.0		DO41
149	1N2045B	5	11		500m	1.5		150A	S19a
150	BZV49C11	5	11		5.0m	20	3.0	150J	M1008
151	CD4741A	5.0	11		23m	8.0		200	u52
152	CD5348B	5	11		125m	2.5	7.2	200J	u39b
153	MMBZ5241	5	11		10m	11			M500
154	NC11	5	11		5.0m	20	7.0		u47
155▼	TMPZ5241	5.0	11		20m	30			TO236Ø
156	ZTK11	5	11		5.0m	25	200m	150J	DO35
157	DSZ3011	10	11		70m	5.0	6.0		A266
158	MA3110	5.0	11	150m	5.0m	20	5.4	125J	M713b
159	RD11MB		11	200m	5.0m	30		150J	M500c
160	RD11MB2	2	11	200m	5.0m	30		150	
161	BZX84C11	5	11	200m	5.0m	20	7.0	150J	M500d
162	ESZ11	5	11	200m	10m	8.0 †			TO106
163	1N715A	5	11	250m	12m	9.0	6.5	175A	DO7
164	1N4105	5	11	.25	.25m	200		200J	DO7
165	1N4698	5	11	.25	.05m			200A	DO14
166	02Z11A	5	11	250m	6.0m	40	7.4	175J	DO35
167	BZX59C11	5	11	250m	5.0m	18	7.0	150A	DO7
168	BZY83C11	5	11	.25	5.0m	20	8	150J	C1g
169	BZY85C11	5	11	.25 §	5.0m	20	8	150J	A171f
170	PD6015,A	5†	11	.25	5.0m	12		150	A109
171	PD6056	5	11	.25	5.0m	11		150	A2c
172	SZ11	6	11	.25	5.0m	35	.82	150J	C1f
173	1/4M11Z10	10†	11	250m	5.7m	13		175J	E204h
174	1N715	10	11	250m	12m	9.0	6.5	175A	DO7
175	1N715B	20	11	.25	12m	9.0			DO7
176	MC6015,A	5†	11	.30	10m	23		175	A2m
177	C5D5241	10	11	320m	20m			150S	M713a
178	D814G	9	11	340m	5.0m	30 †	9.5	100C	A378
179	BZX88C11	5	11	350m	5.0m	20	7.0	175J	A412
180	MA4110	5	11	370m	5.0m	20	5.4	200J	DO34
181	MTZ11		11	400m	10m	15		175J	DO34
182	TZ11		11	400m	10m	15		175J	DO35
183	1N5531D	1	11	400m§	1.0m	80		175A	DO7
184	1N5737D	1	11	400m§	5.0m	20	7.2	200A	DO35
185	Z5A11	1†	11	400m§	5.0m	20	8.0	200J	DO7
186	1N5531C	2	11	400m§	1.0m	80		175A	DO7
187	1N5737C	2	11	400m§	5.0m	20	7.2	200A	DO35
188	BZX79B11	2	11	400m§	5.0m	20	7.4mV	200J	DO35
189	HZS11JB2	2.5	11	400m	5.0m	30		200J	A380d
190	1N962B	5	11	400m	11m	9.5		175S	A398a
191	1N3519	5	11	.40	10m	8.0	6.5	200A	DO7
192	1N5531B	5	11	400m§	1.0m	80		175A	DO7
193	1N5737B	5	11	400m§	5.0m	20	7.2	200A	DO35
194	1S2110A	5	11	.40	5.0m	40	7.0	150A	A1
195	1S7110,B	5†	11	.40	5.0m	60	7.0	150A	A1
196	1S7110A	5	11	.40	5.0m	40	7.0	150A	A1
197	BZX79C11	5	11	400m§	5.0m	25	7.4mV	200J	DO35
198	BZX96C11	5	11	400m	5.0m	20	6.0	150J	DO7
199	CD962B	5	11	400m	11m	9.5	7.6	200J	u39a
200	CD4105	5	11	400m	250u	200	6.0	200J	u39a
201	CD5241B	5	11	400m	20m	22	7.6	200J	u39a
202	CH962	5	11	400m	11m	9.5	7.3	200J	u10
203	CH4105	5	11	400m	250u	200	8.0	200J	u10
204	CH5241	5	11	400m	20m	22	7.6	200J	u10
205	GSZ11A	5	11	400m	10m	15			A69a

SYMBOLS AND CODES EXPLAINED IN INTERPRETER

2. VOLTAGE REFERENCE DIODES - $V_Z \geq 10$ V (Cont'd)

IN ORDER OF: (1) REF. VOLTAGE (2) PD MAX (3) TOLERANCE & (4) TYPE NUMBER

LINE No.	4 TYPE No.	3 TOL ± (%)	1 NOM. REF. VOLT. (V)	2 PD @ 25°C MAX (W)	TEST CUR. Izt (A)	DYN. IMP. MAX (Ω)	TEMP. COEFF Tc MAX	TEMP MAX (°C)	DWG. NO.
1	MA1110	5	11	400m	5.0m	20	5.4	200J	A24d
2	RD11JB	5	11	400m	5.0m	30		175J	DO35
3	RD11JSB(A)	5.0	11	400m	5.0m	30	6.3	175J	DO34
4	USR1171	5	11	400m	7.5m	30	50m	175A	DO7
5	USR1172	5	11	400m	7.5m	30	50m	175A	DO7
6	USR1173	5	11	400m	7.5m	30	50m	175A	DO7
7	USR1174	5	11	400m	7.5m	30	50m	175A	DO7
8	Z5B11	5†	11	400m§	5.0m	20	8.0	200J	DO7
9	1N962A	10	11	400m	11m	9.5		175S	A398a
10	1N5531A	10	11	400m§	1.0m			175A	DO7
11	1S2110	10	11	.40	5.0m	60	7.0	150A	A1
12	GSZ11	10	11	400m	10m	15			A69a
13	1N962	20	11	400m	11m	9.5		175S	A398a
14	1N5531	20	11	400m§	1.0m			175A	DO7
15	GZA11		11	500m		20 †	8.8		A159
16	1N6001D	1	11	500m	5.0m	18		200J	DO35
17	Z0A11	1†	11	500m	5.0m	10 †	8.0	200J	DO29
18	1N6001C	2	11	500m	5.0m	18		200J	DO35
19	1N5241B	5	11	500m	20m	9.5	7.6	200A	A398a
20	1N5857B	5	11	500m	20m	68		150C	M859
21	1N6001B	5	11	500m	5.0m	18		200J	DO35
22	BZX46C11	5	11	500m	11m	9.5	11	175A	DO35
23	BZX55C11	5	11	500m	5.0m	20	7.0	175A	DO35
24	BZX55C11V	5	11	500m	5.0m	20	7.5mV	175J	DO35
25	BZX83C11	5	11	500m	5.0m	20	7.0	175A	DO35
26	BZX97C11	5	11	500m	5.0m	20	7.0	175J	DO35
27	BZY88C11V	5	11	500m	5.0m	35	8.7m	175	DO35
28	CTZ11A	5	11	500m	10m	80	650	200	DO35
29	MA5110	5	11	500m	5.0m	20	5.4	125J	M990
30	MLL5241B	5.0	11	500m§	20m	22	7.6	200J	F140
31	MTZ615,A	5†	11	.50	10m	23		175A	A60e
32	PS8914	5	11	.50	20m	4.0	7.4	150	A60p
33	RD11EB	5	11	500m	10m	15	6.8	175J	DO35
34▼	SZP5-11-5-1								
		5.0	11	500m	1.0m			175	u5a
35▼	SZ.5-11-5-25								
		5.0	11	500m	25m			175	u5a
36	Z0B11	5†	11	500m	5.0m	10 †	8.0	200J	DO29
37	ZMM11	5†	11	500m	5.0m	20	7.0	175J	F135
38	ZMM5241B	5.0	11	500m§	20m	22	7.6	200J	F139
39	ZPD11	5	11	500m	5.0m	20	7.0	175J	DO35
40	ZPD11V	5†	11	500m	5.0m	70	7.7mV	175J	DO35
41	ZS11	5†	11	500m	5.0m	80	500m	150A	C3h
42	BZV55C11	5.7	11	500m	5.0m	20	7.4	200J	F139
43	BZV60C11	5.7	11	500m	5.0m	20	7.4	200J	DO34
44	05Z11	6.0	11	500m	5.0m	30	7.4	175J	DO35
45	1N5241A	10	11	500m	20m	9.5	7.6	200A	A398a
46	1N5857A	10	11	500m	20m	68		150C	M859
47	1N6001A	10	11	500m	5.0m	25		200J	DO35
48	CTZ11	10	11	500m	10m	80	650	200	DO35
49	MLL5241A	10	11	500m§	20m	22	7.6	200J	F140
50▼	SZP5-11-10-1								
		10	11	500m	1.0m			175	u5a
51▼	SZ.5-11-10-25								
		10	11	500m	25m			175	u5a
52	ZMM5241A	10	11	500m§	20m	22	7.6	200J	F139
53	1N5241	20†	11	.50	20m			200A	A398a
54	1N6001	20	11	500m	5.0m	25		200J	DO35
55	MLL5241	20	11	500m§	20m	22		200J	F140
56▼	SZP5-11-20-1								
		20	11	500m	1.0m			175	u5a
57▼	SZ.5-11-20-25								
		20	11	500m	25m			175	u5a
58	ZMM5241	20	11	500m§	20m	22	7.6	200J	F139
59	BZX83C11V	5†	11	550m	5.0m	70	7.7mV	175J	DO35
60	1N4633	5	11	.60	12m	700	7.3	200A	DO14
61	1N3680B	5	11	750m	12m	9.5	6.0	175S	A1az
62	BZV41C11	5	11	750m	5.0m	20	7.0	175S	A412
63	MC6115,A	5†	11	.75	25m	23		175A	A2d
64	TSZ11	5	11	750m	10m	12			TO39
65	1N3680A	10	11	750m	12m	9.5	6.0	175S	A1az
66	1N3680	20	11	750m	12m	9.5	6.0	175S	A1az
67	HZ11PB		11	800m	20m	8.0		175J	DO41
68	AP11.0A,B		11	1.0 †	20m	35			DO35
69	DZB11		11	1.0	10m	30	7.0mV	150J	A298ap
70	GZB11		11	1.0	10m	30	7.0mV	150J	A298ap
71	GZB11C		11	1.0		30	7.0mV		A298ap
72	MA2110		11	1.0	20m	8.0	7.4	200J	A277r
73	Z4A11	1†	11	1.0	25m	6.0	7.0	200J	DO29
74	SZ11.0	2†	11	1.0	20m	8.0 †	6.0	150A	A3g
75	1N1772A	5	11	1.0	50m	4.2		175A	DO13Ø
76	1N3021B	5	11	1.0	23m	8.0		175A	A31a
77	1N4163B	5	11	1.0 §	23m	8.0		200S	DO29
78	1N4328B	5	11	1.0	23m	8.0	6.0	300S	DO7
79	1N4405B	5	11	1.0	23m	3.5	6.0	175A	A1cm
80	1N4662	5	11	1.0	23m	350	7.3	200A	DO15
81	1N4741A	5	11	1.0	23m	8.0		200A	DO41
82	1N5564B	5	11	1.0 §	23m	8.0		200A	A60ac
83	APD11.0A,B	5†	11	1.0 †	23m	10			A1rx
84	AW01-11	5	11	1.0	25m	5.0	6.3	150J	A333
85	BZ110	5	11	1.0	20m	8.0	6.5	175J	A60t
86	BZV85C11	5	11	1.0	20m	10	7.3mV	200J	DO41
87	BZX78C11	5	11	1.0	20m	5.0	7.4mV	200J	
88	BZX85C11	5	11	1.0 §	20m	8.0	8.0	150A	DO41
89	CD4741	5	11	1.0	23m	8.0	7.6	200J	u39a
90	CH4741	5	11	1.0	23m	8.0	6.0	200J	u10
91	CZ11,A,B,D	5†	11	1.0	40m	14	6.0	175	DO15
92	PL11Z	5	11	1.0	50m	7.0	6.5	150J	
93	PR241-RT	5	11	1.0	20m	8.0 †			DO7
94	PS10021B	5	11	1.0	23m	8.0		175A	A60p
95	PS10065	5	11	1.0	23m	6.0	7.5	150	A60p
96	RD11FB	5	11	1.0	20m	8.0		175J	A297c
97	RD11P	5.0	11	1.0	5.0m	20	6.8	150J	M1008
98▼	SZ1-11-5-1	5.0	11	1.0	1.0m			175	u5b
99▼	SZ1-11-5-25								
		5.0	11	1.0	25m			175	u5b
100	TZB11B	5	11	1.0 §	1.0m		7.5	175A	A1ty
101	VR11,A,B	5†	11	1.0	23m	8.0		125A	A1b
102	Z4B11	5†	11	1.0	25m	6.0	7.0	200J	DO29
103	Z11.0	5†	11	1.0	20m	9.9 †	7.0	150A	DO41
104	ZB11	5†	11	1.0 §	23m	8.0		150A	A1bc
105	ZB11B	5	11	1.0	23m	8.0		100C	A1bc
106	ZM4741A	5.0	11	1.0 §	23m	8.0		200J	F139
107	AW08-11B	5.7	11	1.0	25m	8.0	6.3	175J	A60au
108	AW08-11A	8.9	11	1.0	25m	8.0	6.3	175J	A60au
109	1N1772	10	11	1.0	50m	4.2		175A	DO13Ø
110	1N3021A	10	11	1.0	23m	8.0		175A	A31a
111	1N4163A	10	11	1.0 §	23m	8.0		200S	DO29
112	1N4328A	10	11	1.0	23m	8.0	6.0	300S	DO7
113	1N4405A	10	11	1.0	23m	3.5	6.0	175A	A1cm
114	1N4741	10	11	1.0	23m	8.0		200A	DO41
115	1N5564A	10	11	1.0 §	23m	8.0		200A	A60ac
116	1S226	10	11	1.0	25m	6.5	6.3	150J	A56a
117	1Z11	10	11	1.0	10m	30	6.4	150J	DO15
118♦	SZ1-11-10-1								
		10	11	1.0	1.0m			175	u5b
119▼	SZ1-11-10-25								
		10	11	1.0	25m			175	u5b
120	TZB11A	10	11	1.0 §	1.0m		7.5	175A	A1ty
121	ZB11A	10	11	1.0	23m	8.0		100C	A1bc
122	ZM4741	10	11	1.0 §	23m	8.0		200J	F139
123	1N3021	20	11	1.0	23m	8.0		175A	A31a
124	1N4163	20	11	1.0 §	23m	8.0		200S	DO29
125	1N4328	20	11	1.0	23m	8.0	6.0	300S	DO7
126	1N4405	20	11	1.0	23m	3.5		175S	A266a
127	1N5564	20	11	1.0 §	23m			200A	A60ac
128▼	SZ1-11-20-1								
		20	11	1.0	1.0m			175	u5b
129▼	SZ1-11-20-25								
		20	11	1.0	25m			175	u5b
130	1N4833B	5	11	1.2	23m	10	7.3	175	DO29
131	1N4833A	10	11	1.2	23m	10	7.3	175	DO29
132	1N4833	20	11	1.2	23m	10	7.3	175	DO29
133	BZD10C11	5	11	1.3	50m	7.0	10		DO13
134	BZW22C11	5	11	1.3	50m	7.0	10		DO41
135	BZX61C11	5	11	1.3	20m	9.0	5.0	175J	DO15
136	BZX85C11V	5†	11	1.3	20m	300	6.8mV	175J	DO41
137	BZX87C11	5	11	1.3	20m	5.0	6.3	200J	A60al
138	BZY97C11	5	11	1.3	50m	7.0	10		A1rx
139	ZD11	5	11	1.3	50	7.0	6.0	150J	DO13
140	ZY11	5	11	1.3	50m	7.0	8.0	150J	A1bg
141	SZL11	6	11	1.3	50m	5.0		150J	S442
142	ZMY11	6	11	1.3	50m	7	7.5	200J	F149
143	ZPY11	10	11	1.3	50m	7.0	10	200J	DO41
144	1N5926D	1	11	1.5	34m	5.5		200J	DO41
145	1N5926C	2	11	1.5	34m	5.5		200J	DO41
146	1N3790B	5	11	1.5	34m	6.0	7.3	175S	C14Ø
147	1N4466	5	11	1.5	23m	6.0		175A	A60y
148	1N5926B	5	11	1.5	34m	5.5		200J	DO41
149	1S4011,A	5†	11	1.5	20m	2.4	6.0	150A	DO1
150	BZY95C11	5	11	1.5	50m	4.5	6.8	175J	DO1
151	BZY97C11V	5†	11	1.5	50m	7.0	8.3mV	150J	A1bg
152	MC6315,A	5†	11	1.5	75m	21			A1q
153▼	SZ1.5-11-5-1								
		5.0	11	1.5	1.0m			175	u5b
154	SZ11C	5	11	1.5	20m	25	7.0	160A	A26
155	1N3790A	10	11	1.5	34m	6.0	7.3	175S	C14Ø
156	1N5926A	10	11	1.5	34m	5.5		200J	DO41
157▼	SZ1.5-11-10-1								
		10	11	1.5	1.0m			175	u5b
158	1N3790	20	11	1.5	34m	6.0	7.3	175S	C14Ø
159	1N5926	20	11	1.5	34m	5.5		200J	DO41
160▼	SZ1.5-11-20-1								
		20	11	1.5	1.0m			175	u5b
161	2EZ11D5	5	11	2.0	45m	4.0		200J	A1ay
162	2VR11,A,B	5†	11	2.0	45m	6.0			A3e
163	BZV47C11	5	11	2.0	50m	7.0	6.0	175J	A344r
164	LMZ11A	5	11	2.0	45m	4.0	7.3	150A	DO41
165	ZBC11	5†	11	2.0 §	46m	5.0		150A	A1bc
166	ZBC11B	5	11	2.0	46m	5.0			A1ty
167	2EZ11D10	10	11	2.0	45m	4.0		200J	A1ay
168	LMZ11	10	11	2.0	45m	4.0	7.3	150A	DO41
169	ZBC11A	10	11	2.0	46m	5.0			A1ty
170	2EZ11D	20	11	2.0	45m	4.0		200J	A1ay
171	BZV15C11	5	11	2.2	1.0	1.0	9.0	150J	M754Ø
172	1N5021A	5	11	2.5	57m	3.6	6.0	150	A1gn
173	AU01-11	5	11	2.5	65m	5.0	7.0	165J	A333b
174	BZX70C11	5	11	2.5	50m	4.5	7.5mV	150J	A171b
175	Z2B11	5†	11	2.5	50m	5.0	7.0	200J	DO1
176	1N5021	10	11	2.5	57m	3.6	6.0	150	A1gn
177	3EZ11D1	1.0	11	3.0	68m	4.0		150J	A1ay
178	3EZ11D2	2.0	11	3.0	68m	4.0		150J	A1ay
179	3EZ11D3	3.0	11	3.0	68m	4.0		150J	A1ay
180	3EZ11D4	4.0	11	3.0	68	4.0		150J	A1ay
181	1N5068	5	11	3.0	70m	5.0		175A	A146u
182	3EZ11D5	5	11	3.0	68m	4.0		200J	A1ay
183	3VR11,A,B	5†	11	3.0	69m	5.0			A3al
184	BZV16C11	5	11	3.0	46m	8.0	6.0	175	DO3
185	MZ711	5	11	3.0	70m	5.0	7.0	175A	A146j
186	ZCC11	5†	11	3.0 §	70m	5.0		150A	A1ey
187	ZCC11B	5	11	3.0	70m	5.0			A1ey
188	3EZ11D10	10	11	3.0	68m	4.0		200J	A1ay
189	MZ811	10	11	3.0	70m	5.0	7.0	175A	A146j
190	ZCC11A	10	11	3.0	70m	5.0			A1ey
191	3EZ11D	20	11	3.0	68m	4.0		200J	A1ay
192	MZ911	20	11	3.0	70m	5.0	7.0	175A	A146j
193▼	BZT03/D11	10	11	3.2	50m	7.0	10	175J	A94g
194	3T11,A,B	5†	11	3.5	50m	4.2			DO4
195▼	SZ3-11-5-1	5.0	11	5.0	1.0m			175	u5c
196▼	SZ3-11-5-25								
		5.0	11	5.0	25m			175	u5c
197▼	SZ3-11-10-1								
		10	11	5.0	1.0m			175	u5c
198▼	SZ3-11-10-25								
		10	11	5.0	25m			175	u5c
199▼	SZ3-11-20-1								
		20	11	5.0	1.0m			175	u5c
200▼	SZ3-11-20-25								
		20	11	5.0	25m			175	u5c
201	RD11AN		11.1	250m	5.0m	20		175J	A277b

SYMBOLS AND CODES EXPLAINED IN INTERPRETER

2. VOLTAGE REFERENCE DIODES - $V_Z \geq 10$ V (Cont'd)

IN ORDER OF: (1) REF. VOLTAGE (2) PD MAX (3) TOLERANCE & (4) TYPE NUMBER

LINE No.	4 TYPE No.	3 TOL ± (%)	1 NOM. REF. VOLT. (V)	2 PD @ 25°C MAX (W)	TEST CUR. Izt (A)	DYN. IMP. MAX (Ω)	TEMP. COEFF Tc MAX	TEMP MAX (°C)	DWG. NO.
1	HZ11C1	2	11.1	400m	5.0m	25	6.0mV	175J	DO35
2	HZ11C1L	2	11.1	400m	500u	80	5.1	175J	DO35
3	RD11EB3		11.1	500m	10m	10		175J	A277b
4	RD11EL3		11.1	500m	1.0m	10		175J	A277b
5	RD11EN3		11.1	500m	5.0m	10		175J	A277b
6	HZ11HC1	2	11.1	500m	5.0m	25	6.0mV	175J	DO35
7	HZ11EB3	2.5	11.1	500m	20m	10		175J	DO35
8	EQA01-11	15	11.1	500m	15m	12	.06	125J	A387
9	RD11BN		11.1	1.0	20m	6.0		150J	A427
10	RD11FB3		11.1	1.0	20m	8.0		175J	A277r
11	EQB01-11	15	11.1	1.0	30m	8.0	.06	140J	A21b
12	RD11CN		11.1	3.0	60m	4.0		150J	S547
13	ZSA11	1†	11.2		5.0m	120	500m	150A	A1hs
14	ZS11.2	5†	11.2	500m	5.0m	80	500m	150A	C3h
15	EQA01-11S	10	11.2	500m	15m	12	.06	125J	A387
16	HZ11C2L	2	11.3	400m	500u	80	5.3	175J	DO35
17	HZS11JB3	2.5	11.3	400m	5.0m	30		200J	A380d
18	RD11JSB3(A)								
		2.5	11.3	400m	5.0m	30	6.3	175J	DO34
19	EQA02-11AB	7	11.3	500m	10m	15	.06	175J	A1ac
20	RD11MB3	2	11.4	200m	5.0m	30		150	
21	HZ11C2	2	11.4	400m	5.0m	25	6.0mV	175J	DO35
22	RD12EB1		11.4	500m	10m	12		175J	A277b
23	RD12EL1		11.4	500m	1.0m	12		175J	A277b
24	RD12EN1		11.4	500m	5.0m	12		175J	A277b
25	HZ11HC2	2	11.4	500m	5.0m	25	6.0mV	175J	DO35
26	HZ12EB1	2.4	11.4	500m	10m	12		175J	DO35
27	ZS11.4	5†	11.4	500m	5.0m	80	500m	150A	C3h
28	RD12FB1		11.4	1.0	20m	8.0		175J	A277r
29	BZ115	5	11.5	1.0	20m	8.0	6.7	175J	DO41
30	HZ11C3L	2	11.6	400m	500u	80	5.4	175J	DO35
31	RD12JSB1(A)								
		2.5	11.6	400m	5.0m	30	6.7	175J	DO34
32	1N946	5	11.6	.50	7.5m	30	.02	75	DO7
33	1N946A	5	11.6	.50	7.5m	30	.02	100	DO7
34	1N946B	5	11.6	.50	7.5m	30	.02	150	DO7
35	RD11EC	5	11.6	500m	10m	15	6.9	175J	DO35
36	HZ11PC		11.6	800m	20m	8.0		175J	DO41
37	RD11FC	5	11.6	1.0	20m	8.0		175J	A297c
38	RD12MB1	2	11.7	200m	5.0m	35		150	
39	HZ11C3	2	11.7	400m	5.0m	25	6.0mV	175J	DO35
40	HZS12JB1	2.3	11.7	400m	5.0m	30		200J	A380d
41	RD12EB2		11.7	500m	10m	12		175J	A277b
42	RD12EL2		11.7	500m	1.0m	12		175J	A277b
43	RD12EL		11.7	500m	1.0m	12		175J	A277b
44	RD12EN2		11.7	500m	5.0m	12		175J	A277b
45	RD12EN		11.7	500m	5.0m	12		175J	A277b
46	HZ11HC3	2	11.7	500m	5.0m	25	6.0mV	175J	DO35
47	HZ12EB2	2.5	11.7	500m	10m	12		175J	DO35
48	1N941	5	11.7	.50	7.5m	30	1.0	175	DO7
49	1N941A	5	11.7	.50	7.5m	30	1.0	175	DO7
50	1N941B	5	11.7	.50	7.5m	30	1.0	175	DO7
51	1N942	5	11.7	.50	7.5m	30	.50	175	DO7
52	1N942A	5	11.7	.50	7.5m	30	.50	175	DO7
53	1N942B	5	11.7	.50	7.5m	30	.50	175	DO7
54	1N943	5	11.7	.50	7.5m	30	.20	175	DO7
55	1N943A	5	11.7	.50	7.5m	30	.20	175	DO7
56	1N943B	5	11.7	.50	7.5m	30	.20	175	DO7
57	1N944	5	11.7	.50	7.5m	30	.10	175	DO7
58	1N944A	5	11.7	.50	7.5m	30	.10	175	DO7
59	1N944B	5	11.7	.50	7.5m	30	.10	175	DO7
60	1N945	5	11.7	.50	7.5m	30	.05	175	DO7
61	1N945A	5	11.7	.50	7.5m	30	.05	175	DO7
62	1N945B	5	11.7	.50	7.5m	30	.05	175	DO7
63	1N3580	5	11.7	.75	7.5m	25	1.0	175	A31a
64	1N3580A	5	11.7	.75	7.5m	25	1.0	175	A31a
65	1N3580B	5	11.7	.75	7.5m	25	1.0	175	A31a
66	1N3581	5	11.7	.75	7.5m	25	.50	175	A31a
67	1N3581A	5	11.7	.75	7.5m	25	.50	175	A31a
68	1N3581B	5	11.7	.75	7.5m	25	.50	175	A31a
69	1N3582	5	11.7	.75	7.5m	25	.20	175	A31a
70	1N3582A	5	11.7	.75	7.5m	25	.20	175	A31a
71	1N3582B	5	11.7	.75	7.5m	25	.20	175	A31a
72	1N3583	5	11.7	.75	7.5m	25	.10	75	A31a
73	1N3583A	5	11.7	.75	7.5m	25	.10	100	A31a
74	1N3583B	5	11.7	.75	7.5m	25	.10	150	A31a
75	1N3584	5	11.7	.75	7.5m	25	.05	75	A31a
76	1N3584A	5	11.7	.75	7.5m	25	.05	100	A31a
77	1N3584B	5	11.7	.75	7.5m	25	.05	150	A31a
78	RD12FB2		11.7	1.0	20m	8.0		175J	A277r
79	3KZ13	10†	11.7	3.0 §	100m		.08		A3ak§
80	HZ12A1	2	11.8	400m	5.0m	35	8.2mV	175J	DO35
81	HZ12A1L	2	11.8	400m	5.0m	80	5.5	175J	DO35
82	HZ12HA1	2	11.8	500m	5.0m	35	8.2mV	175J	DO35
83	EQA01-12R	10	11.8	500m	15m	12	.06	125J	A387
84	RD13AL		11.9	250m	5.0m	25		175J	A277b
85	RD12JSB2(A)								
		2.5	11.9	400m	5.0m	30	6.7	175J	DO34
86	BZY88C12	5	11.9	400m	5.0m	35	7.5	200J	DO7
87	EQA02-11CD	7	11.9	500m	10m	15	.06	175J	A1ac
88	RD13BL		11.9	1.0	20m	9.0		150J	A427
89	RD13CL		11.9	3.0	60m	6.0		150J	S547
90	TZPD12		12		5.0m	20	8.0		DO35
91	TZPY12		12		50m	7.0	8.0		DO41
92	1N2046A	5	12		500m	2.0		150A	S19a
93	BZV49C12	5	12		5.0m	20	3.0	150J	M1008
94	CD4742A	5.0	12		21m	9.0		200	u52
95	CD5349B	5	12		100m	1	7.3	200J	u39b
96	MC73	5†	12		10m	24			u4b
97	MMBZ5242	5	12		10m	12			M500
98	NC12	5	12		5.0m	25	7.5		u47
99▼	TMPZ5242	5.0	12		20m	12			TO236Ø
100	DSZ3012	10	12		65m	5.0	7.0		A266
101	1N1987B	1	12	150m	1.0m	30	8.0	150	C1
102	1N1987A	5	12	150m	1.0m	30	8.0	150	C1
103	MA3120	5.0	12	150m	5.0m	25	6.0	125J	M713b
104	1N1987	10	12	150m	1.0m	30	8.0	150	C1
105	RD12MB		12	200m	5.0m	35		150J	M500c
106	1N1933B	1	12	200m	1.0m	30	8.0	150A	A82e
107	RD12MB2	2	12	200m	5.0m	35		150	
108	ZS12	2	12	200m	5.0m	100		140A	C74
109	1N1933A	5	12	200m	1.0m	30	8.0	150A	A82e
110	BZX84C12	5	12	200m	5.0m	25	7.0	150J	M500d
111	ESZ12	5	12	200m	10m	10 †			TO106
112	1N1933	10	12	200m	1.0m	30	8.0	150A	A82e
113	1N716A	5	12	250m	12m	10	6.8	175A	DO7
114	1N4106	5	12	.25	.25m	200		200J	DO7
115	1N4699	5	12	.25	.05m			200A	DO14
116	02Z12A	5	12	250m	5.0m	50	7.7	175J	DO35
117	BZX59C12	5	12	250m	5.0m	20	7.0	150A	DO7
118	BZY83C12	5	12	.25	5.0m	30	9	150J	C1g
119	BZY85C12	5	12	.25 §	5.0m	20	9	150J	A171f
120	CD4116	5	12	.25	10m	60	.20	125A	A1cj
121	CD4117	5	12	.25	10m	60	.50	125A	A1cj
122	CD4118	5	12	.25	10m	60	1.0	125A	A1cj
123	CD4121	5	12	.25	10m	60	.05	125A	A1ce
124	CD4122	5	12	.25	10m	60	.10	125A	
125	PD6016,A	5†	12	.25	5.0m	15		150	A109
126	PD6057	5	12	.25	5.0m	12		150	A2c
127	SZ12	5	12	.25	5.0m	40	.83	150J	C1f
128	1/4M12Z10	10†	12	250m	5.2m	15		175J	E204h
129	1N716	10	12	250m	12m	10	6.8	175A	DO7
130	BZY83D12	10	12	.25	5.0m	30	9	150J	C1g
131	1N716B	20	12	.25	12m	10			DO7
132	PTC507	10	12	252m†	21m	9.0			A1bc
133	BZ963	5	12	300m	11m	12	7.6	175S	M765
134	BZ963F	5	12	300m	11m	12	7.6	175S	TO86
135	BZ963T	5	12	300m	11m	12	7.6	175S	TO18
136	MC6016,A	5†	12	.30	10m	24		175	A2m
137	BZX88C12	5	12	350m	5.0m	25	7.5	175J	A412
138	MA4120	5	12	370m	5.0m	25	6.0	200J	DO34
139	MTZ12		12	400m	10m	20		175J	DO34
140	TZ12		12	400m	10m	20		175J	DO35
141	1N1960B	1	12	400m	1.0m	30	8.0	150	DO7
142	1N5532D	1	12	400m§	1.0m	90		175A	DO7
143	1N5738D	1	12	400m§	5.0m	25	7.5	200A	DO35
144	Z5A12	1†	12	400m§	5.0m	40	8.0	200J	DO7
145	1N5532C	2	12	400m§	1.0m	90		175A	DO7
146	1N5738C	2	12	400m§	5.0m	25	7.5	200A	DO35
147	BZX79B12	2	12	400m§	5.0m	25	8.4mV	200J	DO35
148	HZS12JB2	2.5	12	400m	5.0m	30		200J	A380d
149	1N665	5	12	.40	10m	10	6.0	200S	A31b
150	1N759A	5	12	400m	20m	30	6.0	175A	A1
151	1N963B	5	12	400m	10m	11		175S	A398a
152	1N1960A	5	12	400m	1.0m	30	8.0	150	DO7
153	1N3520	5	12	.40	10m	10	7.0	200A	DO7
154	1N5532B	5	12	400m§	1.0m	90		175A	DO7
155	1N5738B	5	12	400m§	5.0m	25	7.5	200A	DO35
156	1S2120A	5	12	.40	5.0m	60	7.0	150A	A1
157	1S7120,B	5†	12	.40	5.0m	75	7.0	150A	A1
158	1S7120A	5	12	.40	5.0m	60	7.0	150A	A1
159	BZX79C12	5	12	400m§	5.0m	30	8.4mV	200J	DO35
160	BZX96C12	5	12	400m	5.0m	20	6.5	150J	DO7
161	CD759A	5	12	400m	20m	30	6.2	200J	u39a
162	CD963B	5	12	400m	10m	11	7.7	200J	u39a
163	CD4106	5	12	400m	250u	200	6.5	200J	u39a
164	CD5242B	5	12	400m	20m	30	7.7	200J	u39a
165	CH759	5	12	400m	20m	10	8.0	200J	u10
166	CH963	5	12	400m	10m	11	7.6	200J	u10
167	CH4106	5	12	400m	250u	200	8.0	200J	u10
168	CH5242	5	12	400m	20m	30	7.7	200J	u10
169	GSZ12A	5	12	400m	10m	18			A69a
170	MA1120	5	12	400m	5.0m	25	6.0	200J	A24d
171	MZL312	5	12	400m	500u	80	7.1	175J	DO35
172	RD12JB	5	12	400m	5.0m	30		175J	DO35
173	RD12JSB(A)	5.0	12	400m	5.0m	30	6.7	175J	DO34
174	Z5B12	5†	12	400m§	5.0m	40	8.0	200J	DO7
175	ZMM759A	5.0	12	400m§	20m	30	6.0	175J	F139
176	1N759	10	12	400m	20m	30	6.0	175A	A1
177	1N963A	10	12	400m	10m	11		175S	A398a
178	1N1960	10	12	400m	1.0m	30	8.0	150	DO7
179	1N5532A	10	12	400m§	1.0m			175A	DO7
180	1S2120	10	12	.40	5.0m	75	7.0	150A	A1
181	GSZ12	10	12	400m	10m	18			A69a
182	ZMM759	10	12	400m§	20m	13	6.0	175J	F139
183	1N963	20	12	400m	10m	11		175S	A398a
184	1N5532	20	12	400m§	1.0m			175A	DO7
185	GZA12		12	500m		20 †	9.0		A159
186	1N6002D	1	12	500m	5.0m	22		200J	DO35
187	Z0A12	1†	12	500m	5.0m	10 †	8.0	200J	DO29
188	1N6002C	2	12	500m	5.0m	22		200J	DO35
189	HZ12EB3	2.5	12	500m	10m	12		175J	DO35
190	1N5242B	5	12	500m	20m	10	7.7	200A	A398a
191	1N5858B	5	12	500m	20m	70		150C	M859
192	1N6002B	5	12	500m	5.0m	22		200J	DO35
193	BZX46C12	5	12	500m	10m	11	11	175A	DO35
194	BZX55C12	5	12	500m	5.0m	20	7.0	175A	DO35
195	BZX55C12V	5	12	500m	5.0m	20	9.0mV	175J	DO35
196	BZX83C12	5	12	500m	5.0m	20	7.0	175A	DO35
197	BZX97C12	5	12	500m	5.0m	20	7.0	175J	DO35
198	BZY88C12V	5	12	500m	5.0m	35	9.0m	175	DO35
199	CTZ12A	5	12	500m	10m	100	700	200	DO35
200	MA5120	5	12	500m	5.0m	25	6.0	125J	M990
201	MLL5242B	5.0	12	500m§	20m	30	7.7	200J	F140
202	MTZ616,A	5†	12	.50	10m	24		175A	A60e
203	MZ312,A,B,C								
		5	12	500m	5.0m	30	6.8	175J	DO35
204	PS8915	5	12	.50	20m	5.0	7.8	150	A60p
205	RD12EB	5	12	500m	10m	20	7.0	175J	DO35
206▼	SZP5-12-5-1	5.0	12	500m	1.0m			175	u5a
207▼	SZ.5-12-5-25								
		5.0	12	500m	25m			175	u5a
208	Z0B12	5†	12	500m	5.0m	10 †	8.0	200J	DO29
209	ZMM5242B	5.0	12	500m§	20m	30	7.7	200J	F139
210	ZPD12	5	12	500m	5.0m	20	7.5	175J	DO35
211	ZPD12V	5†	12	500m	5.0m	90	9.0mV	175J	DO35
212	BZV55C12	5.2	12	500m	5.0m	25	8.4	200J	F139
213	BZV60C12	5.2	12	500m	5.0m	25	8.4	200J	DO34
214	05Z12	6.0	12	500m	5.0m	30	7.7	175J	DO35

SYMBOLS AND CODES EXPLAINED IN INTERPRETER

2. VOLTAGE REFERENCE DIODES - $V_Z \geq 10$ V (Cont'd)

IN ORDER OF: (1) REF. VOLTAGE (2) PD MAX (3) TOLERANCE & (4) TYPE NUMBER

LINE No.	4 TYPE No.	3 TOL ± (%)	1 NOM. REF. VOLT. (V)	2 PD @ 25°C MAX (W)	TEST CUR. Izt (A)	DYN. IMP. MAX (Ω)	TEMP. COEFF Tc MAX	TEMP MAX (°C)	DWG. NO.
1	ZMM12	6†	12	500m	5.0m	20	7.5	175J	F135
2	1N3403	10	12	500m	10m	20	4.0	200S	P5
3	1N3416	10	12	.50	1.0m	110	4.2	200A	P5
4	1N5242A	10	12	500m	20m	10	7.7	200A	A398a
5	1N5858A	10	12	500m	20m	70		150C	M859
6	1N6002A	10	12	500m	5.0m	32		200J	DO35
7	CTZ12	10	12	500m	10m	100	700	200	DO35
8	MLL5242A	10	12	500m§	20m	30	7.7	200J	F140
9▼	SZP5-12-10-1	10	12	500m	1.0m			175	u5a
10▼	SZ.5-12-10-25	10	12	500m	25m			175	u5a
11	ZMM5242A	10	12	500m§	20m	30	7.7	200J	F139
12	1N5242	20†	12	.50	20m			200A	A398a
13	1N6002	20	12	500m	5.0m	32		200J	DO35
14	MLL5242	20	12	500m§	20m	30		200J	F140
15▼	SZP5-12-20-1	20	12	500m	1.0m			175	u5a
16▼	SZ.5-12-20-25	20	12	500m	25m			175	u5a
17	ZMM5242	20	12	500m§	20m	30	7.7	200J	F139
18	BZX83C12V	5†	12	550m	5.0m	90	8.4mV	175J	DO35
19	1N4634	5	12	.60	11m	700	7.6	200A	DO14
20	1N1513A	5	12	750m	12m	6.5	7.5	200S	DO12
21	1N2037A	5	12	.75	5.0m	70	7.0	150J	DO12
22	1N3681B	5	12	750m	11m	11	7.5	175S	A1az
23	BZV41C12	5	12	750m	5.0m	25	7.5	175S	A412
24	MC6116,A	5†	12	.75	25m	24		175A	A2d
25	MLV759A	5	12	750m	20m	10		175A	A2j
26	TSZ12	5	12	750m	10m	20			TO39
27	1N1513	10	12	750m	12m	6.5	7.5	200S	DO12
28	1N3681A	10	12	750m	11m	11	7.5	175S	A1az
29	1N3681	20	12	750m	11m	11	7.5	175S	A1az
30	HZ12PB		12	800m	20m	8.0		175J	DO41
31	AP12.0A,B		12	1.0 †	20m	35			DO35
32	DZB12		12	1.0	10m	30	8.0mV	150J	A298ap
33	GZB12		12	1.0	10m	30	8.0mV	150J	A298ap
34	GZB12C		12	1.0		30	8.0mV		A298ap
35	MA2120		12	1.0	20m	8.0	8.4	200J	A277r
36	1N1877B	1	12	1.0	25m	1.8 †	5.8	175A	DO13
37	Z4A12	1†	12	1.0	25m	7.0	7.5	200J	DO29
38	SZ12.0	2†	12	1.0	20m	8.0 †	7.0	150A	A3g
39	1N1426	5	12	1.0	20m	7.0 †	6.0	200A	A154
40	1N1524A	5	12	1.0	15m	6.0	7.5	200S	DO3
41	1N1773A	5	12	1.0	50m	5.0		175A	DO13⊠
42	1N1877A	5	12	1.0	25m	7.0	5.9	200C	A41e
43	1N3022B	5	12	1.0	21m	9.0		175A	A31a
44	1N4164B	5	12	1.0 §	21m	9.0		200S	DO29
45	1N4329B	5	12	1.0	21m	9.0	6.5	300S	DO7
46	1N4406B	5	12	1.0	21m	4.0	6.5	175A	A1cm
47	1N4663	5	12	1.0	21m	400	7.6	200A	DO15
48	1N4742A	5	12	1.0	21m	9.0		200A	DO41
49	1N5565B	5	12	1.0 §	21m	9.0		200A	A60ac
50	APD12.0A,B	5†	12	1.0 †	21m	10			A1rx
51	ASZ12	5†	12	1.0	10m	18 †			A3ah
52	AW01-12	5	12	1.0	25m	8.0	6.5	150J	A333
53	BZ120	5	12	1.0	20m	9.0	6.8	175J	A60t
54	BZV85C12	5	12	1.0	20m	10	8.6mV	200J	DO41
55	BZX78C12	5	12	1.0	20m	6.0	8.4mV	200J	
56	BZX85C12	5	12	1.0 §	20m	9.0	8.5	150A	DO41
57	CD4742	5	12	1.0	21m	9.0	7.7	200J	u39a
58	CH4742	5	12	1.0	21m	9.0	6.5	200J	u10
59	CZ12,A,B,D	5†	12	1.0	40m	14	6.5	175	DO15
60	MZ412,A,B,C	5	12	1.0	20	9.0	7.3	175J	DO41
61	PL12Z	5	12	1.0	50m	7.0	6.5	150J	
62	PR242-RT	5	12	1.0	20m	9.0 †			DO7
63	PS10022B	5	12	1.0	21m	9.0		175A	A60p
64	PS10066	5	12	1.0	21m	7.0	7.8	150	A60p
65	RD12FB	5	12	1.0	20m	8.0		175J	A297c
66	RD12P	5.0	12	1.0	5.0m	25	7.1	150J	M1008
67▼	SZ1-12-5-1	5.0	12	1.0	1.0m			175	u5b
68▼	SZ1-12-5-25	5.0	12	1.0	25m			175	u5b
69	TZB12B	5	12	1.0 §	1.0m		7.8	175A	A1ty
70	UZ8712	5	12	1.0	23m	9.0	7.0	175	A380
71	VR12,A,B	5†	12	1.0	21m	9.0		125A	A1b
72	Z4B12	5†	12	1.0	25m	7.0	7.5	200J	DO29
73	Z12.0	5†	12	1.0	20m	2.7 †	7.0	150A	DO41
74	ZB12	5†	12	1.0 §	21m	9.0		150A	A1bc
75	ZB12B	5	12	1.0	21m	9.0		100C	A1bc
76	ZM4742A	5.0	12	1.0 §	21m	9.0		200J	F139
77♦	AW08-12B	5.2	12	1.0	25m	8.0	6.5	175J	A60au
78	AW08-12A	8.1	12	1.0	25m	8.0	6.5	175J	A60au
79	1N1524	10	12	1.0	15m	6.0	7.5	200S	DO3
80	1N1773	10	12	1.0	50m	5.0		175A	DO13⊠
81	1N1877	10	12	1.0	25m	7.0	5.9	200C	A41e
82	1N3022A	10	12	1.0	21m	9.0		175A	A31a
83	1N3537	10	12	1.0	25m	2.4	5.8	175S	A31a
84	1N4164A	10	12	1.0 §	21m	9.0		200S	DO29
85	1N4329A	10	12	1.0	21m	9.0	6.5	300S	DO7
86	1N4406A	10	12	1.0	21m	4.0	6.5	175A	A1cm
87	1N4742	10	12	1.0	21m	9.0		200A	DO41
88	1N5565A	10	12	1.0 §	21m	9.0		200A	A60ac
89	1S227	10	12	1.0	25m	7.5	6.6	150J	A56a
90	1Z12	10	12	1.0	10m	30	6.7	150J	DO15
91	KS512A	10	12	1.0 §	5.0m	25 †		100A	A378
92▼	SZ1-12-10-1	10	12	1.0	1.0m			175	u5b
93▼	SZ1-12-10-25	10	12	1.0	25m			175	u5b
94	TZB12A	10	12	1.0 §	1.0m		7.8	175A	A1ty
95	UZ8812	10	12	1.0	23m	9.0	7.0	175	A380
96	ZB12A	10	12	1.0	21m	9.0		100C	A1bc
97	ZM4742	10	12	1.0 §	21m	9.0		200J	F139
98	1N3022	20	12	1.0	21m	9.0		175A	A31a
99	1N4164	20	12	1.0 §	21m	9.0		200S	DO29
100	1N4329	20	12	1.0	21m	9.0	6.5	300S	DO7
101	1N4406	20	12	1.0	21m	4.0		175S	A266a
102	1N5565	20	12	1.0 §	21m			200A	A60ac
103▼	SZ1-12-20-1	20	12	1.0	1.0m			175	u5b
104▼	SZ1-12-20-25	20	12	1.0	25m			175	u5b
105	1N4834B	5	12	1.2	21m	12	7.6	175	DO29
106	1N4834A	10	12	1.2	21m	12	7.6	175	DO29
107	1N4834	20	12	1.2	21m	12	7.6	175	DO29
108	BZD10C12	5	12	1.3	50m	7.0	10		DO13
109	BZW22C12	5	12	1.3	50m	7.0	10		DO41
110	BZX61C12	5	12	1.3	20m	9.0	5.0	175J	DO15
111	BZX85C12V	5†	12	1.3	20m	350	7.8mV	175J	DO41
112	BZX87C12	5	12	1.3	20m	6.0	6.6	200J	A60al
113	BZY97C12	5	12	1.3	50m	7.0	10		A1rx
114	SZL12	5	12	1.3	50m	6.0		150J	S442
115	ZD12	5	12	1.3	50	7.0	6.0	150J	DO13
116	ZY12	5	12	1.3	50m	7.0	8.0	150J	A1bg
117	ZMY12	6	12	1.3	50m	7	7.5	200J	F149
118	ZPY12	10	12	1.3	50m	7.0	10	200J	DO41
119	1N5927D	1	12	1.5	31m	6.5		200J	DO41
120	1N5927C	2	12	1.5	31m	6.5		200J	DO41
121	1N3791B	5	12	1.5	31m	7.0	7.6	175S	C14⊠
122	1N4467	5	12	1.5	21m	7.0		175A	A60y
123	1N5927B	5	12	1.5	31m	6.5		200J	DO41
124	1S4012,A	5†	12	1.5	20m	2.5	6.5	150A	DO1
125	BZY95C12	5	12	1.5	50m	5.0	6.6	175J	DO1
126	BZY97C12V	5†	12	1.5	50m	7.0	9.0mV	150J	A1bg
127	MC6316,A	5†	12	1.5	75m	22			A1q
128▼	SZ1.5-12-5-1	5.0	12	1.5	1.0m			175	u5b
129	SZ12C	5	12	1.5	20m	30	7.0	160A	A26
130	1N3791A	10	12	1.5	31m	7.0	7.6	175S	C14⊠
131	1N5927A	10	12	1.5	31m	6.5		200J	DO41
132▼	SZ1.5-12-10-1	10	12	1.5	1.0m			175	u5b
133	1N3791	20	12	1.5	31m	7.0	7.6	175S	C14⊠
134	1N5927	20	12	1.5	31m	6.5		200J	DO41
135▼	SZ1.5-12-20-1	20	12	1.5	1.0m			175	u5b
136	2EZ12D5	5	12	2.0	41m	4.5		200J	A1ay
137	2VR12,A,B	5†	12	2.0	42m	7.5			A3e
138	BZV47C12	5	12	2.0	50m	7.0	6.5	175J	A344r
139	LMZ12A	5	12	2.0	41m	4.5	7.6	150A	DO41
140	ZBC12	5†	12	2.0 §	42m	5.0		150A	A1bc
141	ZBC12B	5	12	2.0	42m	5.0			A1ty
142	2EZ12D10	10	12	2.0	41m	4.5		200J	A1ay
143	LMZ12	10	12	2.0	41m	4.5	7.6	150A	DO41
144	ZBC12A	10	12	2.0	42m	5.0			A1ty
145	2EZ12D	20	12	2.0	41m	4.5		200J	A1ay
146	BZV15C12	5	12	2.2	1.0	1.0	9.0	150J	M754⊠
147	1N5022A	5	12	2.5	52m	4.2	6.5	150	A1gn
148	AU01-12	5	12	2.5	65m	8.0	7.4	165J	A333b
149	BZX70C12	5	12	2.5	50m	5.0	8.0mV	150J	A171b
150	Z2B12	5†	12	2.5	50m	6.0	7.5	200J	DO1
151	1N5022	10	12	2.5	52m	4.2	6.5	150	A1gn
152	3EZ12D1	1.0	12	3.0	63m	4.5		150J	A1ay
153	3EZ12D2	2.0	12	3.0	63m	4.5		150J	A1ay
154♦	3EZ12D3	3.0	12	3.0	63m	4.5		150J	A1ay
155	3EZ12D4	4.0	12	3.0	63	4.5		150J	A1ay
156	1N4883	5	12	3.0	65m	5.0		175A	A60n
157	3EZ12D5	5	12	3.0	63m	4.5		200J	A1ay
158	3VR12,A,B	5†	12	3.0	63m	5.0			A3al
159	BZV16C12	5	12	3.0	42m	9.0	6.5	175	DO3
160	MZ712	5	12	3.0	65m	5.0	7.0	175A	A146j
161	UDZ712	5	12	3.0	65m	5.0		175A	A356a
162	UZ712	5	12	3.0	65m	5.0	7.0	175A	A380
163	ZCC12	5†	12	3.0 §	60m	5.0		150A	A1ey
164	ZCC12B	5	12	3.0	60m	5.0			A1ey
165	3EZ12D10	10	12	3.0	63m	4.5		200J	A1ay
166	MZ812	10	12	3.0	65m	5.0	7.0	175A	A146j
167	UZ812	10	12	3.0	65m	5.0	7.0	175A	A380
168	ZCC12A	10	12	3.0	60m	5.0			A1ey
169	3EZ12D	20	12	3.0	63m	4.5		200J	A1ay
170	MZ912	20	12	3.0	65m	5.0	7.0	175A	A146j
171	UZ912	20	12	3.0	65m	5.0	7.0	175A	A380
172▼	BZT03/D12	10	12	3.2	50m	7.0	10	175J	A94g
173	1N1594A	5	12	3.5	50m	3.0	7.5	200S	DO4
174	1N1594	10	12	3.5	50m	3.0	7.5	200S	DO4
175▼	SZ3-12-5-1	5.0	12	5.0	1.0m			175	u5c
176▼	SZ3-12-5-25	5.0	12	5.0	25m			175	u5c
177▼	SZ3-12-10-1	10	12	5.0	1.0m			175	u5c
178▼	SZ3-12-10-25	10	12	5.0	25m			175	u5c
179▼	SZ3-12-20-1	20	12	5.0	1.0m			175	u5c
180▼	SZ3-12-20-25	20	12	5.0	25m			175	u5c
181	HZ12A2	2	12.1	400m	5.0m	35	8.2mV	175J	DO35
182	HZ12A2L	2	12.1	400m	5.0m	80	5.5	175J	DO35
183	HZ12LHA2	2	12.1	400m	500u	80		175J	DO35
184	RD12EB3		12.1	500m	10m	12		175J	A277b
185	RD12EL3		12.1	500m	1.0m	12		175J	A277b
186	RD12EN3		12.1	500m	5.0m	12		175J	A277b
187	HZ12HA2	2	12.1	500m	5.0m	35	8.2mV	175J	DO35
188	RD12FB3		12.1	1.0	20m	8.0		175J	A277r
189	EQA01-12	15	12.2	500m	15m	12	.06	125J	A387
190	EQB01-12	15	12.2	1.0	30m	8.0	.06	140J	A21b
191	HZS12JB3	2.4	12.3	400m	5.0m	30		200J	A380d
192	RD12JSB3(A)	2.5	12.3	400m	5.0m	30	6.7	175J	DO34
193	RD12MB3	2	12.4	200m	5.0m	35		150	
194	HZ12A3	2	12.4	400m	5.0m	35	8.2mV	175J	DO35
195	HZ12A3L	2	12.4	400m	500u	80	5.7	175J	DO35
196	1N1736	5	12.4	.40	7.5m	40	80	150C	A69w
197	1N1736A	5	12.4	.40	7.5m	40	40	150C	A69w
198	RD13EB1		12.4	500m	10m	14		175J	A277b
199	RD13EL1		12.4	500m	1.0m	14		175J	A277b
200	RD13EN1		12.4	500m	5.0m	14		175J	A277b
201	HZ12HA3	2	12.4	500m	5.0m	35	8.2mV	175J	DO35

SYMBOLS AND CODES EXPLAINED IN INTERPRETER

2. VOLTAGE REFERENCE DIODES - $V_Z \geq 10$ V (Cont'd)

IN ORDER OF: (1) REF. VOLTAGE (2) PD MAX (3) TOLERANCE & (4) TYPE NUMBER

LINE No.	4 TYPE No.	3 TOL ± (%)	1 NOM. REF. VOLT. (V)	2 PD @ 25°C MAX (W)	TEST CUR. Izt (A)	DYN. IMP. MAX (Ω)	TEMP. COEFF Tc MAX	TEMP MAX (°C)	DWG. NO.
1	HZ13EB1	2.5	12.4	500m	10m	14		175J	DO35
2	RD12EC	5	12.4	500m	10m	20	7.1	175J	DO35
3	ZS12.4	5†	12.4	500m	7.5m	30	500m	150A	C3h
4	1N4057	5	12.4	1.5	10m	25	.50	100	A1ss
5	1N4057A	5	12.4	1.5	10m	25	.20	100	A1ss
6	EQA01-12S	9	12.5	500m	15m	12	.06	125J	A387
7	RD13FB1		12.5	1.0	20m	10		175J	A277r
8	BZ125	5	12.5	1.0	20m	9.0	6.9	175J	DO41
9	HZ12B1	2	12.6	400m	5.0m	35	8.2mV	175J	DO35
10	HZ12B1L	2	12.6	400m	500u	80	5.8	175J	DO35
11	HZ12HB1	2	12.6	500m	5.0m	35	8.2mV	175J	DO35
12	1N1315A	5	12.7	150m	200u			150A	C1
13	1N1315	10	12.7	150m	200u			150A	C1
14	RD13MB1	3	12.7	200m	5.0m	35		150	
15	RD13AK		12.7	250m	5.0m	25		175J	A277b
16	RD13AM		12.7	250m	10m	25		175J	A277b
17	1N766	10	12.7	250m	5.0m	55		150A	A398
18	D814D	10	12.7	340m	5.0m	35 †	9.5	100C	A378
19	HZS13JB1	2.5	12.7	400m	5.0m	37		200J	A380d
20	RD13JSB1(A)	2.5	12.7	400m	5.0m	37	7.1	175J	DO34
21	EQA02-12AB	8	12.7	500m	10m	15	.06	175J	A1ac
22	1N2037	10	12.7	750m	5.0m	70		150A	DO12
23	HZ12PC		12.7	800m	20m	8.0		175J	DO41
24	RD13BK		12.7	1.0	20m	9.0		150J	A427
25	RD13BM		12.7	1.0	20m	9.0		150J	A427
26	RD12FC	5	12.7	1.0	20m	8.0		175J	A297c
27	RD13CK		12.7	3.0	60m	6.0		150J	S547
28	RD13CM		12.7	3.0	60m	6.0		150J	S547
29	RD13A	10	12.8	.20	5.0m	35	7.5	150S	A1dw
30	1N766A	5†	12.8	250m	5.0m	55	7.0	150	DO7
31	HZ12B2	2	12.8	400m	5.0m	35	8.2mV	175J	DO35
32	HZ12B2L	2	12.8	400m	500u	80	5.8	175J	DO35
33	1N4896	5	12.8	.40	.50m	400	1.0	175	DO7
34	1N4896A	5	12.8	.40	.50m	400	1.0	175	DO7
35	1N4897	5	12.8	.40	.50m	400	.50	175	DO7
36	1N4897A	5	12.8	.40	.50m	400	.50	175	DO7
37	1N4898	5	12.8	.40	.50m	400	.20	175	DO7
38	1N4898A	5	12.8	.40	.50m	400	.20	175	DO7
39	1N4899	5	12.8	.40	.50m	400	.10	175	DO7
40	1N4899A	5	12.8	.40	.50m	400	.10	175	DO7
41	1N4900	5	12.8	.40	1.0m	200	1.0	175	DO7
42	1N4900A	5	12.8	.40	1.0m	200	1.0	175	DO7
43	1N4901	5	12.8	.40	1.0m	200	.50	175	DO7
44	1N4901A	5	12.8	.40	1.0m	200	.50	175	DO7
45	1N4902	5	12.8	.40	1.0m	200	.20	175	DO7
46	1N4902A	5	12.8	.40	1.0m	200	.20	175	DO7
47	1N4903	5	12.8	.40	1.0m	200	.10	175	DO7
48	1N4903A	5	12.8	.40	1.0m	200	.10	175	DO7
49	1N4904	5	12.8	.40	2.0m	100	1.0	175	DO7
50	1N4904A	5	12.8	.40	2.0m	100	1.0	175	DO7
51	1N4905	5	12.8	.40	2.0m	100	.50	175	DO7
52	1N4905A	5	12.8	.40	2.0m	100	.50	175	DO7
53	1N4906	5	12.8	.40	2.0m	100	.20	175	DO7
54	1N4906A	5	12.8	.40	2.0m	100	.20	175	DO7
55	1N4907	5	12.8	.40	2.0m	100	.10	175	DO7
56	1N4907A	5	12.8	.40	2.0m	100	.10	175	DO7
57	1N4908	5	12.8	.40	4.0m	50	1.0	175	DO7
58	1N4908A	5	12.8	.40	4.0m	50	1.0	175	DO7
59	1N4909	5	12.8	.40	4.0m	50	.50	175	DO7
60	1N4909A	5	12.8	.40	4.0m	50	.50	175	DO7
61	1N4910	5	12.8	.40	4.0m	50	.20	175	DO7
62	1N4910A	5	12.8	.40	4.0m	50	.20	175	DO7
63	1N4911	5	12.8	.40	4.0m	50	.10	175	DO7
64	1N4911A	5	12.8	.40	4.0m	50	.10	175	DO7
65	1N4912	5	12.8	.40	7.5m	25	1.0	175	DO7
66	1N4912A	5	12.8	.40	7.5m	25	1.0	175	DO7
67	1N4913	5	12.8	.40	7.5m	25	.50	175	DO7
68	1N4913A	5	12.8	.40	7.5m	25	.50	175	DO7
69	1N4914	5	12.8	.40	7.5m	25	.20	175	DO7
70	1N4914A	5	12.8	.40	7.5m	25	.20	175	DO7
71	1N4915	5	12.8	.40	7.5m	25	.10	175	DO7
72	1N4915A	5	12.8	.40	7.5m	25	.10	175	DO7
73	RD13EB2		12.8	500m	10m	14		175J	A277b
74	RD13EL2		12.8	500m	1.0m	14		175J	A277b
75	RD13EL		12.8	500m	1.0m	14		175J	A277b
76	RD13EN2		12.8	500m	5.0m	14		175J	A277b
77	RD13EN		12.8	500m	5.0m	14		175J	A277b
78	HZ12HB2	2	12.8	500m	5.0m	35	8.2mV	175J	DO35
79	HZ13EB2	2.5	12.8	500m	10m	14		175J	DO35
80	PR243-RT	5	12.8	1.0	20m	10 †			DO7
81	BZY88C13	5	12.9	400m	5.0m	35	8.0	200J	DO7
82	RD13FB2		12.9	1.0	20m	10		175J	A277r

$V_Z \geq 13$ V

LINE No.	4 TYPE No.	3 TOL ± (%)	1 NOM. REF. VOLT. (V)	2 PD @ 25°C MAX (W)	TEST CUR. Izt (A)	DYN. IMP. MAX (Ω)	TEMP. COEFF Tc MAX	TEMP MAX (°C)	DWG. NO.
86	TZPD13		13		5.0m	25	8.0		DO35
87	TZPY13		13		50m	9.0	8.0		DO41
88	1N2046B	5	13		500m	2.0		150A	S19a
89	BZV49C13	5	13		5.0m	26	3.0	150J	M1008
90	CD4743A	5.0	13		29m	10		200	u52
91	CD5350B	5	13		100m	2.5	7.4	200J	u39b
92	MMBZ5243	5	13		9.5m	13			M500
93	NC13	5	13		5.0m	30	7.5		u47
94▼	TMPZ5243	5.0	13		9.5m	13			TO236Ø
95	DSZ3013	10	13		50m	6.0	7.0		A266
96	MA3130	5.0	13	150m	5.0m	30	7.0	125J	M713b
97	RD13MB		13	200m	5.0m	35		150J	M500c
98	RD13MB2	3	13	200m	5.0m	35		150	
99	BZX84C13	5	13	200m	5.0m	30	8.0	150J	M500d
100	PTC508	10	13	247m†	19m	10			A1bc
101	1N717A	5	13	250m	12m	11	7.0	175A	DO7
102	1N4107	5	13	.25	.25m	200		200J	DO7
103	1N4700	5	13	.25	.05m			200A	DO14
104	02Z13A	5	13	250m	5.0m	60	8.0	175J	DO35
105	BZX59C13	5	13	250m	5.0m	35	7.5	150A	DO7
106	BZY85C13V5	5	13	.25 §	5.0m	26	9	150J	A171f
107	PD6017,A	5†	13	.25	1.0m	30		150	A109
108	PD6058	5	13	.25	5.0m	13		150	A2c
109	SZ13	5	13	.25	5.0m	50	.83	150J	C1f
110	1/4M13Z10	10†	13	250m	4.8m	18		175J	E204h
111	1N717	10	13	250m	12m	11	7.0	175A	DO7
112	1N717B	20	13	.25	12m	11			DO7
113	MC6017,A	5†	13	.30	5.0m	27		175	A2m
114	BZX88C13	5	13	350m	5.0m	30	7.5	175J	A412
115	MA4130	5	13	370m	5.0m	30	7.0	200J	DO34
116	MTZ13		13	400m	10m	25		175J	DO34
117	TZ13		13	400m	10m	25		175J	DO35
118	1N5533D	1	13	400m§	1.0m	90		175A	DO7
119	1N5739D	1	13	400m§	5.0m	30	8.0	200A	DO35
120	Z5A13	1†	13	400m§	5.0m	40	8.0	200J	DO7
121	1N5533C	2	13	400m§	1.0m	90		175A	DO7
122	1N5739C	2	13	400m§	5.0m	30	8.0	200A	DO35
123	BZX79B13	2	13	400m§	5.0m	30	9.4mV	200J	DO35
124	1N964B	5	13	400m	9.5m	13		175S	A398a
125	1N3521	5	13	.40	5.0m	12	7.5	200A	DO7
126	1N5533B	5	13	400m§	1.0m	90		175A	DO7
127	1N5739B	5	13	400m§	5.0m	30	8.0	200A	DO35
128	1S2130A	5	13	.40	5.0m	75	7.0	150A	A1
129	1S7130,B	5†	13	.40	5.0m	90	7.0	150A	A1
130	1S7130A	5	13	.40	5.0m	75	7.0	150A	A1
131	BZX79C13	5	13	400m§	5.0m	30	9.4mV	200J	DO35
132	BZX96C13	5	13	400m	5.0m	25	7.0	150J	DO7
133	CD964B	5	13	400m	9.5m	13	7.9	200J	u39a
134	CD4107	5	13	400m	250u	200	6.5	200J	u39a
135	CD5243B	5	13	400m	9.5m	13	7.9	200J	u39a
136	CH964	5	13	400m	9.5m	13	7.9	200J	u10
137	CH4107	5	13	400m	250u	200	8.0	200J	u10
138	CH5243	5	13	400m	9.5m	13	7.9	200J	u10
139	GSZ13A	5	13	400m	10m	20			A69a
140	MA1130	5	13	400m	5.0m	30	7.0	200J	A24d
141	RD13JB	5	13	400m	5.0m	37		175J	DO35
142	RD13JSB(A)	5.0	13	400m	5.0m	37	7.1	175J	DO34
143	Z5B13	5†	13	400m§	5.0m	40	8.0	200J	DO7
144	1N964A	10	13	400m	9.5m	13		175S	A398a
145	1N5533A	10	13	400m§	1.0m			175A	DO7
146	1S2130	10	13	.40	5.0m	90	7.0	150A	A1
147	GSZ13	10	13	400m	10m	20			A69a
148	1N964	20	13	400m	9.5m	13		175S	A398a
149	1N5533	20	13	400m§	1.0m			175A	DO7
150	GZA13		13	500m		25 †	9.2		A159
151	1N6003D	1	13	500m	5.0m	25		200J	DO35
152	Z0A13	1†	13	500m	5.0m	15 †	8.0	200J	DO29
153	1N6003C	2	13	500m	5.0m	25		200J	DO35
154	BZV55C13	4.8	13	500m	5.0m	30	9.4	200J	F139
155	BZV60C13	4.8	13	500m	5.0m	30	9.4	200J	DO34
156	1N5243B	5	13	500m	9.5m	13	7.9	200A	A398a
157	1N5859B	5	13	500m	9.5m	70		150C	M859
158	1N6003B	5	13	500m	5.0m	25		200J	DO35
159	BZX46C13	5	13	500m	9.5m	13	11	175A	DO35
160	BZX55C13	5	13	500m	5.0m	26	7.5	175A	DO35
161	BZX55C13V	5	13	500m	5.0m	26	10mV	175J	DO35
162	BZX83C13	5	13	500m	5.0m	25	7.5	175A	DO35
163	BZX97C13	5	13	500m	5.0m	26	7.5	175J	DO35
164	BZY88C13V	5	13	500m	5.0m	35	10m	175	DO35
165	CTZ13A	5	13	500m	5.0m	120	750	200	DO35
166	MA5130	5	13	500m	5.0m	30	7.0	125J	M990
167	MLL5243B	5.0	13	500m§	9.5m	13	7.9	200J	F140
168	MTZ617,A	5†	13	.50	5.0m	27		175A	A60e
169	PS8916	5	13	.50	10m	8.0	8.0	150	A60p
170	RD13EB	5	13	500m	10m	25	7.2	175J	DO35
171▼	SZP5-13-5-1	5.0	13	500m	1.0m			175	u5a
172▼	SZ.5-13-5-25	5.0	13	500m	25m			175	u5a
173	Z0B13	5†	13	500m	5.0m	15 †	8.0	200J	DO29
174	ZMM5243B	5.0	13	500m§	9.5m	13	7.9	200J	F139
175	ZPD13	5	13	500m	5.0m	25	8.0	175J	DO35
176	ZPD13V	5†	13	500m	5.0m	110	10mV	175J	DO35
177	05Z13	6.0	13	500m	5.0m	35	8.0	175J	DO35
178	ZMM13	6†	13	500m	5.0m	25	8.0	175J	F135
179	1N5243A	10	13	500m	9.5m	13	7.9	200A	A398a
180	1N5859A	10	13	500m	9.5m	70		150C	M859
181	1N6003A	10	13	500m	5.0m	36		200J	DO35
182	CTZ13	10	13	500m	5.0m	120	750	200	DO35
183	MLL5243A	10	13	500m§	9.5m	13	7.9	200J	F140
184▼	SZP5-13-10-1	10	13	500m	1.0m			175	u5a
185▼	SZ.5-13-10-25	10	13	500m	25m			175	u5a
186	ZMM5243A	10	13	500m§	9.5m	13	7.9	200J	F139
187	1N5243	20†	13	.50	9.5m			200A	A398a
188	1N6003	20	13	500m	5.0m	36		200J	DO35
189	MLL5243	20	13	500m§	9.5m	13		200J	F140
190▼	SZP5-13-20-1	20	13	500m	1.0m			175	u5a
191▼	SZ.5-13-20-25	20	13	500m	25m			175	u5a
192	ZMM5243	20	13	500m§	9.5m	13	7.9	200J	F139
193	BZX83C13V	5†	13	550m	5.0m	110	9.1mV	175J	DO35
194	1N4635	5	13	.60	9.5m	700	7.9	200A	DO14
195	1N3682B	5	13	750m	9.5m	13	6.5	175S	A1az
196	BZV41C13	5	13	750m	5.0m	30	7.5	175S	A412
197	MC6117,A	5†	13	.75	10m	27		175A	A2d
198	1N3682A	10	13	750m	9.5m	13	6.5	175S	A1az
199	1N3682	20	13	750m	9.5m	13	6.5	175S	A1az
200	HZ13PB		13	800m	20m	10		175J	DO41
201	AP13.0A,B		13	1.0 †	9.5m	25			DO35
202	DZB13		13	1.0	10m	30	9.0mV	150J	A298ap
203	GZB13		13	1.0	10m	30	9.0mV	150J	A298ap
204	GZB13C		13	1.0		30	9.0mV		A298ap
205	MA2130		13	1.0	20m	10	9.4	200J	A277r
206	Z4A13	1†	13	1.0	25m	8.0	7.5	200J	DO29
207	SZ13.0	2†	13	1.0	20m	9.0 †	7.0	150A	A3g
208	1N1774A	5	13	1.0	50m	5.8		175A	DO13Ø
209	1N3023B	5	13	1.0	19m	10		175A	A31a
210	1N4165B	5	13	1.0 §	19m	10		200S	DO29
211	1N4330B	5	13	1.0	19m	10	6.5	300S	DO7
212	1N4407B	5	13	1.0	19m	5.0	6.5	175A	A1cm
213	1N4664	5	13	1.0	19m	450	7.9	200A	DO15

SYMBOLS AND CODES EXPLAINED IN INTERPRETER

2. VOLTAGE REFERENCE DIODES - $V_Z \geq 13$ V (Cont'd)

IN ORDER OF: (1) REF. VOLTAGE (2) PD MAX (3) TOLERANCE & (4) TYPE NUMBER

LINE No.	4 TYPE No.	3 TOL ± (%)	1 NOM. REF. VOLT. (V)	2 PD @ 25°C MAX (W)	TEST CUR. Izt (A)	DYN. IMP. MAX (Ω)	TEMP. COEFF Tc MAX	TEMP MAX (°C)	DWG. NO.
1	1N4743A	5	13	1.0	19m	10		200A	DO41
2	1N5566B	5	13	1.0 §	19m	10		200A	A60ac
3	APD13.0A,B	5†	13	1.0 †	19m	10			A1rx
4	BZ130	5	13	1.0	20m	10	7.1	175J	A60t
5	BZV85C13	5	13	1.0	20m	10	9.7mV	200J	DO41
6	BZX78C13	5	13	1.0	20m	7.0	9.4mV	200J	
7	BZX85C13	5	13	1.0 §	20m	10	8.5	150A	DO41
8	CD4743	5	13	1.0	19m	10	7.9	200J	u39a
9	CH4743	5	13	1.0	19m	10	6.5	200J	u10
10	CZ13,A,B,D	5†	13	1.0	40m	15	6.5	175	DO15
11	PL13Z	5	13	1.0	50m	10	7.0	150J	
12	PS10023B	5	13	1.0	19m	10		175A	C18g
13	PS10067	5	13	1.0	19m	8.0	8.2	150	A60p
14	RD13P	5.0	13	1.0	5.0m	30	7.3	150J	M1008
15▼	SZ1-13-5-1	5.0	13	1.0	1.0m			175	u5b
16▼	SZ1-13-5-25	5.0	13	1.0	25m			175	u5b
17	TZB13B	5	13	1.0 §	1.0m		8.1	175A	A1ty
18	UZ8713	5	13	1.0	21m	10	7.0	175	A380
19	VR13,A,B	5†	13	1.0	19m	10		125A	A1b
20	Z4B13	5†	13	1.0	25m	8.0	7.5	200J	DO29
21	Z13.0	5†	13	1.0	20m	2.5 †	8.0	150A	DO41
22	ZB13	5†	13	1.0 §	19m	10		150A	A1bc
23	ZB13B	5	13	1.0	19m	10		100C	A1bc
24	ZM4743A	5.0	13	1.0 §	19m	10		200J	F139
25	AW08-13B	5.6	13	1.0	25m	8.0	6.8	175J	A60au
26	AW08-13A	8.3	13	1.0	25m	8.0	6.8	175J	A60au
27	1N1774	10	13	1.0	50m	5.8		175A	DO13Ø
28	1N3023A	10	13	1.0	19m	10		175A	A31a
29	1N4165A	10	13	1.0 §	19m	10		200S	DO29
30	1N4330A	10	13	1.0	19m	10	6.5	300S	DO7
31	1N4407A	10	13	1.0	19m	5.0	6.5	175A	A1cm
32	1N4743	10	13	1.0	19m	10		200A	DO41
33	1N5566A	10	13	1.0 §	19m	10		200A	A60ac
34	1S228	10	13	1.0	25m	9.0	6.9	150J	A56a
35	1Z13	10	13	1.0	10m	30	6.9	150J	DO15
36▼	SZ1-13-10-1	10	13	1.0	1.0m			175	u5b
37▼	SZ1-13-10-25	10	13	1.0	25m			175	u5b
38	TZB13A	10	13	1.0 §	1.0m		8.1	175A	A1ty
39	UZ8813	10	13	1.0	21m	10	7.0	175	A380
40	ZB13A	10	13	1.0	19m	10		100C	A1bc
41	ZM4743	10	13	1.0 §	19m	10		200J	F139
42	1N3023	20	13	1.0	19m	10		175A	A31a
43	1N4165	20	13	1.0 §	19m	10		200S	DO29
44	1N4330	20	13	1.0	19m	10	6.5	300S	DO7
45	1N4407	20	13	1.0	19m	5.0		175S	A266a
46	1N5566	20	13	1.0 §	19m			200A	A60ac
47▼	SZ1-13-20-1	20	13	1.0	1.0m			175	u5b
48▼	SZ1-13-20-25	20	13	1.0	25m			175	u5b
49	1N4835B	5	13	1.2	19m	15	7.9	175	DO29
50	1N4835A	10	13	1.2	19m	15	7.9	175	DO29
51	1N4835	20	13	1.2	19m	15	7.9	175	DO29
52	BZD10C13	5	13	1.3	50m	10	10		DO13
53	BZW22C13	5	13	1.3	50m	9.0	10		DO41
54	BZX61C13	5	13	1.3	20m	10	5.0	175J	DO15
55	BZX85C13V	5†	13	1.3	20m	400	8.5mV	175J	DO41
56	BZX87C13	5	13	1.3	20m	7.0	6.5	200J	A60al
57	BZY97C13	5	13	1.3	50m	10	10		A1rx
58	ZD13	5	13	1.3	50	10	6.0	150J	DO13
59	ZY13	5	13	1.3	50m	10	8.0	150J	A1bg
60	ZPY13	12	13	1.3	50m	9.0	10	200J	DO41
61	1N5928D	1	13	1.5	28m	7.0		200J	D041
62	1N5928C	2	13	1.5	28m	7.0		200J	DO41
63	1N3792B	5	13	1.5	29m	8.0	7.9	175S	C14Ø
64	1N4468	5	13	1.5	19m	8.0		175A	A60y
65	1N5928B	5	13	1.5	28m	7.0		200J	DO41
66	1S4013,A	5†	13	1.5	20m	4.6	7.0	150A	DO1
67	BZY95C13	5	13	1.5	50m	6.0	6.5	175J	DO1
68	BZY97C13V	5†	13	1.5	50m	10	9.8mV	150J	A1bg
69	MC6317,A	5†	13	1.5	75m	25			A1q
70▼	SZ1.5-13-5-1	5.0	13	1.5	1.0m			175	u5b
71	SZ13C	5	13	1.5	20m	40	7.0	160A	A26
72	1N3792A	10	13	1.5	29m	8.0	7.9	175S	C14Ø
73	1N5928A	10	13	1.5	28m	7.0		200J	DO41
74▼	SZ1.5-13-10-1	10	13	1.5	1.0m			175	u5b
75	1N3792	20	13	1.5	29m	8.0	7.9	175S	C14Ø
76	1N5928	20	13	1.5	28m	7.0		200J	DO41
77▼	SZ1.5-13-20-1	20	13	1.5	1.0m			175	u5b
78	2EZ13D5	5	13	2.0	38m	5.0		200J	A1ay
79	2VR13,A,B	5†	13	2.0	38m	8.0			A3e
80	BZV47C13	5	13	2.0	50m	10	6.5	175J	A344r
81	LMZ13A	5	13	2.0	38m	5.0	7.9	150A	DO41
82	ZBC13	5†	13	2.0 §	38m	6.0		150A	A1bc
83	ZBC13B	5	13	2.0	38m	6.0			A1ty
84	2EZ13D10	10	13	2.0	38m	5.0		200J	A1ay
85	LMZ13	10	13	2.0	38m	5.0	7.9	150A	DO41
86	ZBC13A	10	13	2.0	38m	6.0			A1ty
87	2EZ13D	20	13	2.0	38m	5.0		200J	A1ay
88	BZV15C13	5	13	2.2	1.0	1.0	9.0	150J	M754Ø
89	1N5023A	5	13	2.5	48m	4.8	6.5	150	A1gn
90	BZX70C13	5	13	2.5	50m	6.0	8.5mV	150J	A171b
91	Z2B13	5†	13	2.5	50m	7.0	7.5	200J	DO1
92	1N5023	10	13	2.5	48m	4.8	6.5	150	A1gn
93	3EZ13D1	1.0	13	3.0	58m	4.5		150J	A1ay
94	3EZ13D2	2.0	13	3.0	58m	4.5		150J	A1ay
95	3EZ13D3	3.0	13	3.0	58m	4.5		150J	A1ay
96	3EZ13D4	4.0	13	3.0	58	4.5		150J	A1ay
97	1N5069	5	13	3.0	50m	6.0		175A	A146u
98	3EZ13D5	5	13	3.0	58m	4.5		200J	A1ay
99	3VR13,A,B	5†	13	3.0	57m	5.0			A3al
100	BZV16C13	5	13	3.0	38m	10	6.5	175	DO3
101	MZ713	5	13	3.0	50m	6.0	7.0	175A	A146j
102	UZ713	5	13	3.0	50m	6.0	7.0	175A	A380
103	ZCC13	5†	13	3.0 §	50m	6.0		150A	A1ey
104	ZCC13B	5	13	3.0	50m	6.0			A1ey
105	3EZ13D10	10	13	3.0	58m	4.5		200J	A1ay
106	MZ813	10	13	3.0	50m	6.0	7.0	175A	A146j
107	UZ813	10	13	3.0	50m	6.0	7.0	175A	A380
108	ZCC13A	10	13	3.0	50m	6.0			A1ey
109	3EZ13D	20	13	3.0	58m	4.5		200J	A1ay
110	MZ913	20	13	3.0	50m	6.0	7.0	175A	A146j
111	UZ913	20	13	3.0	50m	6.0	7.0	175A	A380
112▼	BZT03/D13	10	13	3.2	50m	10	10	175J	A94g
113	3T13,A,B	5†	13	3.5	50m	5.8			DO4
114▼	SZ3-13-5-1	5.0	13	5.0	1.0m			175	u5c
115▼	SZ3-13-5-25	5.0	13	5.0	25m			175	u5c
116▼	SZ3-13-10-1	10	13	5.0	1.0m			175	u5c
117▼	SZ3-13-10-25	10	13	5.0	25m			175	u5c
118▼	SZ3-13-20-1	20	13	5.0	1.0m			175	u5c
119▼	SZ3-13-20-25	20	13	5.0	25m			175	u5c
120	HZ12B3	2	13.1	400m	5.0m	35	8.2mV	175J	DO35
121	HZ12B3L	2	13.1	400m	500u	80	5.9	175J	DO35
122	HZ12HB3	2	13.1	500m	5.0m	35	8.2mV	175J	DO35
123	HZS13JB2	2.5	13.2	400m	5.0m	37		200J	A380d
124	RD13JSB2(A)	2.5	13.2	400m	5.0m	37	7.1	175J	DO34
125	EQA01-13R	10	13.2	500m	15m	15	.06	125J	A387
126	AW01-13	6	13.2	1.0	25m	8.0	6.8	150J	A333
127	RD13FB	6	13.2	1.0	20m	10		175J	A297c
128	EQB01-13	10	13.2	1.0	30m	10	.06	140J	A21b
129	ZMY13	6	13.2	1.3	50m	9	7.5	200J	F149
130	AU01-13	6	13.2	2.5	65m	8.0	7.6	165J	A333b
131	RD13EB3		13.3	500m	10m	14		175J	A277b
132	RD13EL3		13.3	500m	1.0m	14		175J	A277b
133	HZ13EB3	2.6	13.3	500m	10m	14		175J	DO35
134	HZ12C1	2	13.4	400m	5.0m	35	8.2mV	175J	DO35
135	HZ12C1L	2	13.4	400m	500u	80	5.9	175J	DO35
136	HZ12HC1	2	13.4	500m	5.0m	35	8.2mV	175J	DO35
137	RD13FB3		13.4	1.0	20m	10		175J	A277r
138	RD13MB3	3	13.5	200m	5.0m	35		150	
139	RD13AN		13.5	250m	10m	25		175J	A277b
140	BZY83C13V5	5	13.5	.25	5.0m	30	9	150J	C1g
141	RD13BN		13.5	1.0	20m	9.0		150J	A427
142	BZ135	5	13.5	1.0	20m	10	7.2	175J	DO41
143	RD13CN		13.5	3.0	60m	6.0		150J	S547
144	3KZ15	10†	13.5	3.0 §	75m		.08		A3ak§
145	1N2766	5	13.6		7.5m	40	.50	175A	A1gd
146	1N2766A	5	13.6		7.5m	40	.25	175A	A1gd
147	EQA02-13AB	8	13.6	500m	10m	20	.06	175J	A1ac
148	HZ12C2	2	13.7	400m	5.0m	35	8.2mV	175J	DO35
149	HZ12C2L	2	13.7	400m	500u	80	5.9	175J	DO35
150	RD13JSB3(A)	2.5	13.7	400m	5.0m	37	7.1	175J	DO34
151	HZS13JB3	2.6	13.7	400m	5.0m	37		200J	A380d
152	RD15EB1		13.7	500m	10m	16		175J	A277b
153	RD15EL1		13.7	500m	1.0m	16		175J	A277b
154	RD15EN1		13.7	500m	5.0m	16		175J	A277b
155	HZ12HC2	2	13.7	500m	5.0m	35	8.2mV	175J	DO35
156	HZ15EB1	2.3	13.8	500m	10m	16		175J	DO35
157	ZS14	5	13.8	500m	5.0m	60	500m	150A	C3h
158	RD15FB1		13.9	1.0	20m	10		175J	A277r
159	1C5351	3	14		100m	2.5			u36a
160	1N2046C	5	14		500m	2.0		150A	S19a
161	CD5351B	5	14		100m	2.5	7.8	200J	u39b
162	MMBZ5244	5	14		9.0m	15			M500
163▼	TMPZ5244	5.0	14		9.0m	15			TO236Ø
164	DSZ3014	10	14		50m	6.0	7.0		A266
165	1N4108	5	14	.25	.25m	200		200J	DO7
166	1N4701	5	14	.25	.05m			200A	DO14
167	SZ14	5	14	.25	5.0m	65	.83	150J	C1f
168	1/4M14Z10	10†	14	250m	4.5m	20		175J	E204h
169	C5D5244	10	14	320m	9.0m			150S	M713a
170	MA4140M	5	14	370m	5.0m	30	7.0	200J	DO34
171	1N5534D	1	14	400m§	1.0m	100		175A	DO7
172	1N5534C	2	14	400m§	1.0m	100		175A	DO7
173	HZ12C3	2	14	400m	5.0m	35	8.2mV	175J	DO35
174	HZ12C3L	2	14	400m	500u	80	6.0	175J	DO35
175	1N5534B	5	14	400m§	1.0m	100		175A	DO7
176	CD4108	5	14	400m	250u	200	7.0	200J	u39a
177	CD5244B	5	14	400m	9.0m	15	8.2	200J	u39a
178	CH4108	5	14	400m	250u	200	8.5	200J	u10
179	CH5244	5	14	400m	9.0m	15	8.2	200J	u10
180	MA1140M	5	14	400m	5.0m	30	7.0	200J	A24D
181	MZL314	5	14	400m	500u	80	7.7	175J	DO35
182	1N5534A	10	14	400m§	1.0m			175A	DO7
183	1N5534	20	14	400m§	1.0m			175A	DO7
184	HZ12HC3	2	14	500m	5.0m	35	8.2mV	175J	DO35
185	1N5244B	5	14	500m	9.0m	15	8.2	200A	A398a
186	1N5860B	5	14	500m	9.0m	70		150C	M859
187	MLL5244B	5.0	14	500m§	9.0m	15	8.2	200J	F140
188	MZ314,A,B,C	5	14	500m	5.0m	30	7.1	175J	DO35
189▼	SZP5-14-5-1	5.0	14	500m	1.0m			175	u5a
190▼	SZ.5-14-5-25	5.0	14	500m	25m			175	u5a
191	ZMM5244B	5.0	14	500m§	9.0m	15	8.2	200J	F139
192	1N5244A	10	14	500m	9.0m	15	8.2	200A	A398a
193	1N5860A	10	14	500m	9.0m	70		150C	M859
194	EQA01-14R	10	14	500m	10m	15	.07	125J	A387
195	MLL5244A	10	14	500m§	9.0m	15	8.2	200J	F140
196▼	SZP5-14-10-1	10	14	500m	1.0m			175	u5a
197▼	SZ.5-14-10-25	10	14	500m	25m			175	u5a
198	ZMM5244A	10	14	500m§	9.0m	15	8.2	200J	F139
199	1N5244	20†	14	.50	9.0m			200A	A398a
200	MLL5244	20	14	500m§	9.0m	15		200J	F140

SYMBOLS AND CODES EXPLAINED IN INTERPRETER

2. VOLTAGE REFERENCE DIODES - $V_Z \geq 13$ V (Cont'd)

IN ORDER OF: (1) REF. VOLTAGE (2) PD MAX (3) TOLERANCE & (4) TYPE NUMBER

LINE No.	4 TYPE No.	3 TOL ± (%)	1 NOM. REF. VOLT. (V)	2 PD @ 25°C MAX (W)	TEST CUR. Izt (A)	DYN. IMP. MAX (Ω)	TEMP. COEFF Tc MAX	TEMP MAX (°C)	DWG. NO.
1▼	SZP5-14-20-1								
		20	14	500m	1.0m			175	u5a
2▼	SZ.5-14-20-25								
		20	14	500m	25m			175	u5a
3	ZMM5244	20	14	500m§	9.0m	15	8.2	200J	F139
4	AP14.0A,B	5†	14	1.0 †	9.0m	25			DO35
5	BZ140	5	14	1.0	20m	12	7.3	175J	A60t
6	CZ14,A,B,D	5†	14	1.0	40m	15	7.0	175	DO15
7	MZ414,A,B,C								
		5	14	1.0	20	10	7.7	175J	DO41
8	PR244-RT	5	14	1.0	20m	12 †			DO7
9▼	SZ1-14-5-1	5.0	14	1.0	1.0m			175	u5b
10▼	SZ1-14-5-25								
		5.0	14	1.0	25m			175	u5b
11	UZ8714	5	14	1.0	19m	12	7.0	175	A380
12	VR14,A,B	5†	14	1.0	12m	12	7.0	125C	A1ex
13	1S229	10	14	1.0	25m	11	7.1	150J	A56a
14	EQB01-14	10	14	1.0	20m	10	.07	140J	A21b
15▼	SZ1-14-10-1								
		10	14	1.0	1.0m			175	u5b
16▼	SZ1-14-10-25								
		10	14	1.0	25m			175	u5b
17	UZ8814	10	14	1.0	19m	12	7.0	175	A380
18▼	SZ1-14-20-1								
		20	14	1.0	1.0m			175	u5b
19▼	SZ1-14-20-25								
		20	14	1.0	25m			175	u5b
20▼	SZ1.5-14-5-1								
		5.0	14	1.5	1.0m			175	u5b
21▼	SZ1.5-14-10-1								
		10	14	1.5	1.0m			175	u5b
22▼	SZ1.5-14-20-1								
		20	14	1.5	1.0m			175	u5b
23	2EZ14D5	5	14	2.0	35m	5.5		200J	A1ay
24	2VR14,A,B	5†	14	2.0	12m	11			A3e
25	LMZ14A	5	14	2.0	35m	5.5	8.0	150A	A1kk
26	ZBC14	5†	14	2.0 §	35m	6.0		150A	A1bc
27	ZBC14B	5	14	2.0	35m	6.0			A1ty
28	2EZ14D10	10	14	2.0	35m	5.5		200J	A1ay
29	LMZ14	10	14	2.0	35m	5.5	8.0	150A	DO41
30	ZBC14A	10	14	2.0	35m	6.0			A1ty
31	2EZ14D	20	14	2.0	35m	5.5		200J	A1ay
32	1N5024A	5	14	2.5	45m	5.4	7.0	150	A1gn
33	1N5024	10	14	2.5	45m	5.4	7.0	150	A1gn
34	3EZ14D1	1.0	14	3.0	53m	5.0		150J	A1ay
35	3EZ14D2	2.0	14	3.0	53m	5.0		150J	A1ay
36	3EZ14D3	3.0	14	3.0	53m	5.0		150J	A1ay
37	3EZ14D4	4.0	14	3.0	53	5.0		150J	A1ay
38	1N5070	5	14	3.0	50m	6.0		175A	A146u
39	3EZ14D5	5	14	3.0	53m	5.0		200J	A1ay
40	MZ714	5	14	3.0	50m	6.0	7.0	175A	A146j
41	UZ714	5	14	3.0	50m	6.0	7.0	175	A380
42	ZCC14	5†	14	3.0 §	50m	6.0		150A	A1ey
43	ZCC14B	5	14	3.0	50m	6.0			A1ey
44	3EZ14D10	10	14	3.0	53m	5.0		200J	A1ay
45	MZ814	10	14	3.0	50m	6.0	7.0	175A	A146j
46	UZ814	10	14	3.0	50m	6.0	7.0	175	A380
47	ZCC14A	10	14	3.0	50m	6.0			A1ey
48	3EZ14D	20	14	3.0	53m	5.0		200J	A1ay
49	MZ914	20	14	3.0	50m	6.0	7.0	175A	A146j
50	UZ914	20	14	3.0	50m	6.0	7.0	175	A380
51▼	SZ3-14-5-1	5.0	14	5.0	1.0m			175	u5c
52▼	SZ3-14-5-25								
		5.0	14	5.0	25m			175	u5c
53▼	SZ3-14-10-1								
		10	14	5.0	1.0m			175	u5c
54▼	SZ3-14-10-25								
		10	14	5.0	25m			175	u5c
55▼	SZ3-14-20-1								
		20	14	5.0	1.0m			175	u5c
56▼	SZ3-14-20-25								
		20	14	5.0	25m			175	u5c
57	RD15JSB1(A)								
		2.5	14.1	400m	5.0m	42	7.3	175J	DO34
58	HZ13PC		14.1	800m	20m	10		175J	DO41
59	RD13FC	6	14.1	1.0	20m	10		175J	A297c
60	RD15MB1	3	14.2	200m	5.0m	40		150	
61	HZS15JB1	2.3	14.2	400m	5.0m	42		200J	A380d
62	RD15EB2		14.2	500m	10m	16		175J	A277b
63	RD15EL2		14.2	500m	1.0m	16		175J	A277b
64	RD15EL		14.2	500m	1.0m	16		175J	A277b
65	RD15EN2		14.2	500m	5.0m	16		175J	A277b
66	RD15EN		14.2	500m	5.0m	16		175J	A277b
67	RD13EC	5	14.2	500m	10m	25	7.3	175J	DO35
68	HZ15EB2	2.4	14.3	500m	10m	16		175J	DO35
69	HZ15-1	2	14.4	400m	5.0m	40	10mV	175J	DO35
70	HZ15-1L	2	14.4	400m	500u	80	6.1	175J	DO35
71	RD15JSB2(A)								
		2.5	14.4	400m	5.0m	42	7.3	175J	DO34
72	HZ15H1	2	14.4	500m	5.0m	40	10mV	175J	DO35
73	3KZ16	10†	14.4	3.0 §	75m		.08		A3ak§
74	RD15MB2	3	14.5	200m	5.0m	40		150	
75	RD16AL		14.5	250m	10m	30		175J	A277b
76	1N1961B	1	14.5	400m	1.0m	50	8.8	150	DO7
77	1N1961A	5	14.5	400m	1.0m	50	8.8	150	DO7
78	1N1961	10	14.5	400m	1.0m	50	8.8	150	DO7
79	EQA02-14AB	8	14.5	500m	10m	20	.07	175J	A1ac
80	RD16BL		14.5	1.0	20m	12		150J	A427
81	BZ145	5	14.5	1.0	20m	12	7.3	175J	DO41
82	AW01-15	7	14.5	1.0	15m	12	7.2	150J	A333
83	AU01-15	7	14.5	2.5	40m	12	8.0	165J	A333b
84	RD16CL		14.5	3.0	60m	8.0		150J	S547
85	1N4058	5	14.6	1.5	10m	30	.50	100	A1ss
86	1N4058A	5	14.6	1.5	10m	30	.20	100	A1ss
87	HZS15JB2	2.5	14.7	400m	5.0m	42		200J	A380d
88	RD15EB3		14.7	500m	10m	16		175J	A277b
89	RD15EL3		14.7	500m	1.0m	16		175J	A277b
90	RD15EN3		14.7	500m	5.0m	16		175J	A277b
91	HZ15EB3	2.5	14.7	500m	10m	16		175J	DO35
92	RD15FB	6	14.7	1.0	20m	10		175J	A297c
93	HZ15-2	2	14.8	400m	5.0m	40	10mV	175J	DO35
94	HZ15-2L	2	14.8	400m	500u	80	6.2	175J	DO35
95	HZ15H2	2	14.8	500m	5.0m	40	10mV	175J	DO35
96	RD15FB3		14.8	1.0	20m	10		175J	A277r
97	ZMY15	6	14.8	1.3	50m	9	7.5	200J	F149
98	BZY88C15	5	14.9	400m	5.0m	35	8.3	200J	DO7
99	TZPD15		15		5.0m	30	8.0		DO35
100	TZPY15		15		50m	9.0	8.0		DO41
101	1C5352	3	15		75m	2.5			u36a
102	1N2047A	5	15		500m	3.0		150A	S19a
103	BZV49C15	5	15		5.0m	30	3.0	150J	M1008
104	CD4744A	5.0	15		17m	14		200	u52
105	CD5352B	5	15		75m	2.5	7.8	200J	u39b
106	MMBZ5245	5	15		8.5m	16			M500
107	NC15	5	15		5.0m	30	7.5		u47
108▼	TMPZ5245	5.0	15		8.5m	16			TO236Ø
109	DSZ3015	10	15		50m	6.0	7.0		A266
110	1N1988B	1	15	150m	1.0m	50	8.8	150	C1
111	1N1988A	5	15	150m	1.0m	50	8.8	150	C1
112	MA3150	5.0	15	150m	5.0m	30	9.2	125J	M713b
113	1N1988	10	15	150m	1.0m	50	8.8	150	C1
114	RD15MB		15	200m	5.0m	40		150J	M500c
115	1N1934B	1	15	200m	1.0m	50	8.8	150A	A82e
116	RD15MB3	3	15	200m	5.0m	40		150	
117	1N1934A	5	15	200m	1.0m	50	8.8	150A	A82e
118	BZX84C15	5	15	200m	5.0m	30	8.0	150J	M500d
119	1N1934	10	15	200m	1.0m	50	8.8	150A	A82e
120	SZ15	4	15	.25	5.0m	80	.81	150J	C1f
121	1N718A	5	15	250m	12m	13	7.2	175A	DO7
122	1N4109	5	15	.25	.25m	200		200J	DO7
123	1N4702	5	15	.25	.05m			200A	DO14
124	02Z15A	5	15	250m	5.0m	70	8.4	175J	DO35
125	BZX59C15	5	15	250m	5.0m	50	8.0	150A	DO7
126	BZY83C15	5	15	.25	5.0m	55	9	150J	C1g
127	PD6018,A	5†	15	.25	1.0m	45		150	A109
128	PD6059	5	15	.25	5.0m	15		150	A2c
129	1/4M15Z10	10†	15	250m	4.2m	22		175J	E204h
130	1N718	10	15	250m	12m	13	7.2	175A	DO7
131	BZY83D15	10	15	.25	5.0m	55	9.5	150J	C1g
132	1N718B	20	15	.25	12m	12			DO7
133	PTC509	10	15	255m†	17m	14			A1bc
134	BZ965	5	15	300m	8.5m	16	8.2	175S	M765
135	BZ965F	5	15	300m	8.5m	16	8.2	175S	TO86
136	BZ965T	5	15	300m	8.5m	16	8.2	175S	TO18
137	MC6018,A	5†	15	.30	5.0m	32		175	A2m
138	BZX88C15	5	15	350m	5.0m	30	7.5	175J	A412
139	MA4150	5	15	370m	5.0m	30	9.2	200J	DO34
140	MTZ15		15	400m	10m	30		175J	DO34
141	1N5535D	1	15	400m§	1.0m	100		175A	DO7
142	1N5740D	1	15	400m§	5.0m	30	8.3	200A	DO35
143	Z5A15	1†	15	400m§	5.0m	45	9.0	200J	DO7
144	1N5535C	2	15	400m§	1.0m	100		175A	DO7
145	1N5740C	2	15	400m§	5.0m	30	8.3	200A	DO35
146	BZX79B15	2	15	400m§	5.0m	30	11mV	200J	DO35
147	1N666	5	15	.40	5.0m	24	7.0	200S	A31b
148	1N965B	5	15	400m	8.5m	16		175S	A398a
149	1N3522	5	15	.40	5.0m	14	8.0	200A	DO7
150	1N5535B	5	15	400m§	1.0m	100		175A	DO7
151	1N5740B	5	15	400m§	5.0m	30	8.3	200A	DO35
152	1S2150A	5	15	.40	5.0m	90	7.0	150A	A1
153	1S7150,B	5†	15	.40	5.1m	120	7.0	150A	A1
154	1S7150A	5	15	.40	5.0m	90	7.0	150A	A1
155	BZX79C15	5	15	400m§	5.0m	40	11mV	200J	DO35
156	BZX96C15	5	15	400m	5.0m	30	7.0	150J	DO7
157	CD965B	5	15	400m	8.5m	16	8.2	200J	u39a
158	CD4109	5	15	400m	250u	100	7.0	200J	u39a
159	CD5245B	5	15	400m	8.5m	16	8.2	200J	u39a
160	CH965	5	15	400m	8.5m	16	8.2	200J	u10
161	CH4109	5	15	400m	250u	100	8.5	200J	u10
162	CH5245	5	15	400m	8.5m	16	8.2	200J	u10
163	GSZ15A	5	15	400m	10m	30			A69a
164	MA1150	5	15	400m	5.0m	30	9.2	200J	A24d
165	RD15JSB(A)	5.0	15	400m	5.0m	42	7.3	175J	DO34
166	Z5B15	5†	15	400m§	5.0m	45	9.0	200J	DO7
167	1N965A	10	15	400m	8.5m	16		175S	A398a
168	1N5535A	10	15	400m§	1.0m			175A	DO7
169	1S2150	10	15	.40	5.0m	120	7.0	150A	A1
170	GSZ15	10	15	400m	10m	30			A69a
171	1N965	20	15	400m	8.5m	16		175S	A398a
172	1N5535	20	15	400m§	1.0m			175A	DO7
173	GZA15		15	500m		25 †	9.5		A159
174	1N6004D	1	15	500m	5.0m	32		200J	DO35
175	Z0A15	1†	15	500m	5.0m	15 †	9.0	200J	DO29
176	1N6004C	2	15	500m	5.0m	32		200J	DO35
177	1N5245B	5	15	500m	8.5m	16	8.2	200A	A398a
178	1N5861B	5	15	500m	8.5m	34		150C	M859
179	1N6004B	5	15	500m	5.0m	32		200J	DO35
180	BZX46C15	5	15	500m	8.5m	16	11	175A	DO35
181	BZX55C15	5	15	500m	5.0m	30	7.5	175A	DO35
182	BZX55C15V	5	15	500m	5.0m	30	11mV	175J	DO35
183	BZX83C15	5	15	500m	5.0m	30	7.5	175A	DO35
184	BZY88C15V	5	15	500m	5.0m	35	12m	175	DO35
185	CTZ15A	5	15	500m	5.0m	140	800	200	DO35
186	MA5150	5	15	500m	5.0m	30	9.2	125J	M990
187	MLL5245B	5.0	15	500m§	8.5m	16	8.2	200J	F140
188	MTZ618,A	5†	15	.50	5.0m	32		175A	A60e
189	PS8917	5	15	.50	10m	10	8.5	150	A60p
190	RD15EB	5	15	500m	10m	30	7.4	175J	DO35
191▼	SZP5-15-5-1								
		5.0	15	500m	1.0m			175	u5a
192▼	SZ.5-15-5-25								
		5.0	15	500m	25m			175	u5a
193	Z0B15	5†	15	500m	5.0m	15 †	9.0	200J	DO29
194	ZMM5245B	5.0	15	500m§	8.5m	16	8.2	200J	F139
195	ZPD15	5	15	500m	5.0m	30	8.0	175J	DO35
196	ZPD15V	5†	15	500m	5.0m	110	12mV	175J	DO35
197	05Z15	6.0	15	500m	5.0m	35	8.4	175J	DO35
198	ZMM15	6†	15	500m	5.0m	30	8.0	175J	F135
199	BZX97C15	8	15	500m	5.0m	30	7.5	175J	DO35
200	BZV55C15	8.6	15	500m	5.0m	30	11	200J	F139

SYMBOLS AND CODES EXPLAINED IN INTERPRETER

2. VOLTAGE REFERENCE DIODES - $V_Z \geq 13$ V (Cont'd)

IN ORDER OF: (1) REF. VOLTAGE (2) PD MAX (3) TOLERANCE & (4) TYPE NUMBER

LINE No.	4 TYPE No.	3 TOL ± (%)	1 NOM. REF. VOLT. (V)	2 PD @ 25°C MAX (W)	TEST CUR. Izt (A)	DYN. IMP. MAX (Ω)	TEMP. COEFF Tc MAX	TEMP MAX (°C)	DWG. NO.
1	BZV60C15	8.6	15	500m	5.0m	30	11	200J	DO34
2	1N3404	10	15	500m	10m	25	4.5	200S	P5
3	1N3417	10	15	.50	1.0m	140	5.6	200A	P5
4	1N5245A	10	15	500m	8.5m	16	8.2	200A	A398a
5	1N5861A	10	15	500m	8.5m	34		150C	M859
6	1N6004A	10	15	500m	5.0m	42		200J	DO35
7	CTZ15	10	15	500m	5.0m	140	800	200	DO35
8	EQA01-15R	10	15	500m	10m	15	.07	125J	A387
9	LL5245A	10	15	500m	8.5m	16	8.3	200J	F139
10	LL5245B	10	15	500m	8.5m	16	8.3	200J	F139
11	MLL5245A	10	15	500m§	8.5m	16	8.2	200J	F140
12▼	SZP5-15-10-1								
13▼	SZ.5-15-10-25	10	15	500m	1.0m			175	u5a
		10	15	500m	25m			175	u5a
14	ZMM5245A	10	15	500m§	8.5m	16	8.2	200J	F139
15	1N5245	20†	15	.50	8.5m			200A	A398a
16	1N6004	20	15	500m	5.0m	42		200J	DO35
17	LL5245	20	15	500m	8.5m	16	8.3	200J	F139
18	MLL5245	20	15	500m§	8.5m	16		200J	F140
19▼	SZP5-15-20-1								
20▼	SZ.5-15-20-25	20	15	500m	1.0m			175	u5a
		20	15	500m	25m			175	u5a
21	ZMM5245	20	15	500m§	8.5m	16	8.2	200J	F139
22	BZX83C15V	5†	15	550m	5.0m	110	12mV	175J	DO35
23	1N4636	5	15	.60	8.5m	700	8.2	200A	DO14
24	1N1514A	5	15	750m	10m	10	8.0	200S	DO12
25	1N2038A	5	15	.75	5.0m	120	8.0	150J	DO12
26	1N3683B	5	15	750m	8.5m	16	7.0	175S	A1az
27	BZV41C15	5	15	750m	5.0m	30	7.5	175S	A412
28	MC6118,A	5†	15	.75	10m	32		175A	A2d
29	1N1514	10	15	750m	10m	10	8.0	200S	DO12
30	1N3683A	10	15	750m	8.5m	16	7.0	175S	A1az
31	1N3683	20	15	750m	8.5m	16	7.0	175S	A1az
32	HZ15PB		15	800m	20m	10		175J	DO41
33	DZB15		15	1.0	10m	30	11mV	150J	A298ap
34	GZB15		15	1.0		30	11mV		A298ap
35	GZB15C		15	1.0		30	11mV		A298ap
36	MA2150		15	1.0	20m	12	11	200J	A277r
37	1N1878B	1	15	1.0	25m	2.0 †	6.0	175A	DO13
38	Z4A15	1†	15	1.0	25m	10	8.0	200J	DO29
39	SZ15.0	2†	15	1.0	20m	10 †	7.5	150A	A3g
40	1N1525A	5	15	1.0	13m	13	8.0	200S	DO3
41	1N1775A	5	15	1.0	50m	7.6		175A	DO13Ø
42	1N1878A	5	15	1.0	25m	8.0	6.0	200C	A41e
43	1N3024B	5	15	1.0	17m	14		175A	A31a
44	1N4166B	5	15	1.0 §	17m	14		200S	DO29
45	1N4331B	5	15	1.0	17m	14	7.0	300S	DO7
46	1N4408B	5	15	1.0	17m	6.0	7.0	175A	A1cm
47	1N4665	5	15	1.0	17m	500	8.2	200A	DO15
48	1N4744A	5	15	1.0	17m	14		200A	DO41
49	1N5567B	5	15	1.0 §	17m	14		200A	A60ac
50	AP15.0A,B	5†	15	1.0 †	8.5m	25			DO35
51	APD15.0A,B	5†	15	1.0 †	17m	25			A1rx
52	ASZ15	5†	15	1.0	10m	30 †			A3ah
53	BZ150	5	15	1.0	20m	14	7.4	175J	A60t
54	BZV85C15	5	15	1.0	15m	15	11mV	200J	DO41
55	BZX78C15	5	15	1.0	20m	10	11mV	200J	
56	BZX85C15	5	15	1.0 §	15m	15	9.0	150A	DO41
57	CD4744	5	15	1.0	17m	14	8.2	200J	u39a
58	CH4744	5	15	1.0	17m	14	7.0	200J	u10
59	CZ15,A,B,D	5†	15	1.0	40m	16	7.0	175	DO15
60	PL15Z	5	15	1.0	50m	10	7.0	150J	
61	PR245-RT	5	15	1.0	20m	14 †			DO7
62	PS10024B	5	15	1.0	17m	14		175A	A60p
63	PS10068	5	15	1.0	17m	10	8.6	150	A60p
64	RD15P	5.0	15	1.0	5.0m	30	7.9	150J	M1008
65▼	SZ1-15-5-1	5.0	15	1.0	1.0m			175	u5b
66▼	SZ1-15-5-25	5.0	15	1.0	25m			175	u5b
67	TZB15B	5	15	1.0 §	1.0m		8.4	175A	A1ty
68	UZ8715	5	15	1.0	17m	14	7.0	175	A380
69	VR15,A,B	5†	15	1.0	17m	14		125A	A1b
70	Z4B15	5†	15	1.0	25m	10	8.0	200J	DO29
71	Z15.0	5†	15	1.0	20m	2.4 †	8.0	150A	DO41
72	ZB15	5†	15	1.0 §	17m	14		150A	A1bc
73	ZB15B	5	15	1.0	17m	14		100C	A1bc
74	ZM4744A	5.0	15	1.0 §	17m	14		200J	F139
75	AW08-15B	5.6	15	1.0	15m	12	7.2	175J	A60au
76	AW08-15A	8.6	15	1.0	15m	12	7.2	175J	A60au
77	1N1427	10	15	1.0	10m	17	7.0	150A	A154
78	1N1525	10	15	1.0	13m	13	8.0	200S	DO3
79	1N1775	10	15	1.0	50m	7.6		175A	DO13Ø
80	1N1878	10	15	1.0	25m	8.0	6.0	200C	A41e
81	1N3024A	10	15	1.0	17m	14		175A	A31a
82	1N4166A	10	15	1.0 §	17m	14		200S	DO29
83	1N4331A	10	15	1.0	17m	14	7.0	300S	DO7
84	1N4408A	10	15	1.0	17m	6.0	7.0	175A	A1cm
85	1N4744	10	15	1.0	17m	14		200A	DO41
86	1N5567A	10	15	1.0 §	17m	14		200A	A60ac
87	1S230	10	15	1.0	25m	13	7.3	150J	A56a
88	1Z15	10	15	1.0	10m	30	7.3	150J	DO15
89	EQB01-15	10	15	1.0	20m	10	.07	140J	A21b
90	KS515A	10	15	1.0	5.0m	25 †	10	100C	A378
91▼	SZ1-15-10-1								
92▼	SZ1-15-10-25	10	15	1.0	1.0m			175	u5b
		10	15	1.0	25m			175	u5b
93	TZB15A	10	15	1.0 §	1.0m		8.4	175A	A1ty
94	UZ8815	10	15	1.0	17m	14	7.0	175	A380
95	ZB15A	10	15	1.0	17m	14		100C	A1bc
96	ZM4744	10	15	1.0 §	17m	14		200J	F139
97	1N3024	20	15	1.0	17m	14		175A	A31a
98	1N4166	20	15	1.0 §	17m	14		200S	DO29
99	1N4331	20	15	1.0	17m	14	7.0	300S	DO7
100	1N4408	20	15	1.0	17m	6.0		175S	A266a
101	1N5567	20	15	1.0 §	17m			200A	A60ac
102▼	SZ1-15-20-1	20	15	1.0	1.0m			175	u5b
103▼	SZ1-15-20-25	20	15	1.0	25m			175	u5b
104	1N4836B	5	15	1.2	17m	17	8.2	175	DO29
105	1N4836A	10	15	1.2	17m	17	8.2	175	DO29
106	1N4836	20	15	1.2	17m	17	8.2	175	DO29
107	BZX61C15	5	15	1.3	20m	14	6.0	175J	DO15
108	BZX85C15V	5†	15	1.3	15m	500	10mV	175J	DO41
109	BZX87C15	5	15	1.3	20m	10	7.0	200J	A60al
110	BZY97C15	5	15	1.3	50m	10	10		A1rx
111	ZD15	5	15	1.3	50	10	7.0	150J	DO13
112	ZY15	5	15	1.3	50m	10	9.0	150J	A1bg
113	BZD10C15	8	15	1.3	50m	10	10		DO13
114	BZW22C15	8	15	1.3	50m	9.0	10		DO41
115	ZPY15	13	15	1.3	50m	9.0	10	200J	DO41
116	1N5929D	1	15	1.5	25m	9.0		200J	DO41
117	1N5929C	2	15	1.5	25m	9.0		200J	DO41
118	1N3793B	5	15	1.5	25m	10	8.2	175S	C14Ø
119	1N4469	5	15	1.5	17m	9.0		175A	A60y
120	1N5929B	5	15	1.5	25m	9.0		200J	DO41
121	1S4015,A	5†	15	1.5	20m	5.4	8.0	150A	DO1
122	BZY95C15	5	15	1.5	50m	8.0	6.6	175J	DO1
123	BZY97C15V	5†	15	1.5	50m	10	11mV	150J	A1bg
124	MC6318,A	5†	15	1.5	75m	28			A1q
125▼	SZ1.5-15-5-1	5.0	15	1.5	1.0m			175	u5b
126	SZ15C	5	15	1.5	20m	40	8.0	160A	A26
127	1N3793A	10	15	1.5	25m	10	8.2	175S	C14Ø
128	1N5929A	10	15	1.5	25m	9.0		200J	DO41
129▼	SZ1.5-15-10-1	10	15	1.5	1.0m			175	u5b
130	1N3793	20	15	1.5	25m	10	8.2	175S	C14Ø
131▼	SZ1.5-15-20-1	20	15	1.5	1.0m			175	u5b
132	1N5929	29	15	1.5	25m	9.0		200J	DO41
133	2EZ15D5	5	15	2.0	33m	7.0		200J	A1ay
134	2VR15,A,B	5†	15	2.0	33m	10			A3e
135	BZV47C15	5	15	2.0	50m	10	7.0	175J	A344r
136	LMZ15A	5	15	2.0	33m	7.0	8.2	150A	DO41
137	ZBC15	5†	15	2.0 §	34m	6.0		150A	A1bc
138	ZBC15B	5	15	2.0	34	6.0			A1ty
139	2EZ15D10	10	15	2.0	33m	7.0		200J	A1ay
140	LMZ15	10	15	2.0	33m	7.0	8.2	150A	DO41
141	ZBC15A	10	15	2.0	34	6.0			A1ty
142	2EZ15D	20	15	2.0	33m	7.0		200J	A1ay
143	BZV15C15	5	15	2.2	1.0	1.2	9.0	150J	M754Ø
144	1N5025A	5	15	2.5	42m	6.0	7.0	150	A1gn
145	BZX70C15	5	15	2.5	50m	8.0	10mV	150J	A171b
146	Z2B15	5†	15	2.5	50m	9.0	8.0	200J	DO1
147	1N5025	10	15	2.5	42m	6.0	7.0	150	A1gn
148	3EZ15D1	1.0	15	3.0	50m	5.5		150J	A1ay
149	3EZ15D2	2.0	15	3.0	50m	5.5		150J	A1ay
150	3EZ15D3	3.0	15	3.0	50m	5.5		150J	A1ay
151	3EZ15D4	4.0	15	3.0	50	5.5		150J	A1ay
152	1N5071	5	15	3.0	50m	6.0		175A	A146u
153	3EZ15D5	5	15	3.0	50m	5.5		200J	A1ay
154	3VR15,A,B	5†	15	3.0	50m	6.0			A3al
155	BZV16C15	5	15	3.0	34m	14	7.0	175	DO3
156	MZ715	5	15	3.0	50m	6.0	7.0	175A	A146j
157	UDZ715	5	15	3.0	50m	6.0		175A	A356a
158	UZ715	5	15	3.0	50m	6.0	7.0	175A	A380
159	ZCC15	5†	15	3.0 §	50m	6.0		150A	A1ey
160	ZCC15B	5	15	3.0	50m	6.0			A1ey
161	3EZ15D10	10	15	3.0	50m	5.5		200J	A1ay
162	MZ815	10	15	3.0	50m	6.0	7.0	175A	A146j
163	UZ815	10	15	3.0	50m	6.0	7.0	175A	A380
164	ZCC15A	10	15	3.0	50m	6.0			A1ey
165	3EZ15D	20	15	3.0	50m	5.5		200J	A1ay
166	MZ915	20	15	3.0	50m	6.0	7.0	175A	A146j
167	UZ915	20	15	3.0	50m	6.0	7.0	175A	A380
168▼	BZT03/D15	10	15	3.2	50m	10	10	175J	A94g
169	1N1595A	5	15	3.5	40m	5.5	8.0	200S	DO4
170	1N1595	10	15	3.5	40m	5.5	8.0	200S	DO4
171▼	SZ3-15-5-1	5.0	15	5.0	1.0m			175	u5c
172▼	SZ3-15-5-25	5.0	15	5.0	25m			175	u5c
173▼	SZ3-15-10-1	10	15	5.0	1.0m			175	u5c
174▼	SZ3-15-10-25	10	15	5.0	25m			175	u5c
175▼	SZ3-15-20-1	20	15	5.0	1.0m			175	u5c
176▼	SZ3-15-20-25	20	15	5.0	25m			175	u5c
177	RD16EB1		15.1	500m	10m	18		175J	A277b
178	RD16EL1		15.1	500m	1.0m	18		175J	A277b
179	RD16EN1		15.1	500m	5.0m	18		175J	A277b
180	HZ15-3	2	15.2	400m	5.0m	40	10mV	175J	DO35
181	HZ15-3L	2	15.2	400m	500u	80	6.2	175J	DO35
182	HZS15JB3	2.5	15.2	400m	5.0m	42		200J	A380d
183	RD15JSB3(A)								
		2.5	15.2	400m	5.0m	42	7.3	175J	DO34
184	HZ15H3	2	15.2	500m	5.0m	40	10mV	175J	DO35
185	HZ16EB1	2.4	15.2	500m	10m	18		175J	DO35
186	RD15EC	5	15.3	500m	10m	30	7.5	175J	DO35
187	RD16FB1		15.3	1.0	20m	12		175J	A277r
188	EQA02-15AB	8	15.4	500m	10m	20	.07	175J	A1ac
189	RD16MB1	3	15.5	200m	5.0m	40		150	
190	HZ16-1	2	15.6	400m	5.0m	45	11mV	175J	DO35
191	HZ16-1L	2	15.6	400m	500u	80	6.5	175J	DO35
192	RD16EB2		15.6	500m	10m	18		175J	A277b
193	RD16EL2		15.6	500m	1.0m	18		175J	A277b
194	RD16EL		15.6	500m	1.0m	18		175J	A277b
195	RD16EN2		15.6	500m	5.0m	18		175J	A277b
196	RD16EN		15.6	500m	5.0m	18		175J	A277b
197	HZ16H1	2	15.6	500m	5.0m	45	11mV	175J	DO35
198	HZ16EB2	2.5	15.6	500m	10m	18		175J	DO35
199	HZ15PC		15.6	800m	20m	10		175J	DO41
200	RD15FC	5	15.6	1.0	20m	10		175J	A297c
201	1N1316A	5	15.7	150m	200u			150A	C1
202	1N1316	10	15.7	150m	200u			150A	C1

SYMBOLS AND CODES EXPLAINED IN INTERPRETER

2. VOLTAGE REFERENCE DIODES - $V_Z \geq 13$ V (Cont'd)

IN ORDER OF: (1) REF. VOLTAGE (2) PD MAX (3) TOLERANCE & (4) TYPE NUMBER

LINE No.	4 TYPE No.	3 TOL ± (%)	1 NOM. REF. VOLT. (V)	2 PD @ 25°C MAX (W)	TEST CUR. Izt (A)	DYN. IMP. MAX (Ω)	TEMP. COEFF Tc MAX	TEMP MAX (°C)	DWG. NO.
1	RD16AK		15.7	250m	10m	30		175J	A277b
2	RD16AM		15.7	250m	10m	30		175J	A277b
3	1N767	10	15.7	250m	5.0m	70		150A	A398
4	HZS16JB1	2.4	15.7	400m	5.0m	50		200J	A380d
5	RD16JSB1(A)								
		2.5	15.7	400m	5.0m	50	7.6	175J	DO34
6	1N2038	10	15.7	750m	5.0m	120		150A	DO12
7	RD16BK		15.7	1.0	20m	12		150J	A427
8	RD16BM		15.7	1.0	20m	12		150J	A427
9	BZ157	5	15.7	1.0	20m	16	7.5	175J	DO41
10	RD16CK		15.7	3.0	60m	8.0		150J	S547
11	RD16CM		15.7	3.0	60m	8.0		150J	S547
12	RD16A	10	15.8	.20	5.0m	55	8.0	150S	A1dw
13	1N767A	5	15.8	250m	5.0m	70	8.0	150	DO7
14	BZY88C16	5	15.8	400m	5.0m	40	8.1	200J	DO7
15	RD16FB2		15.8	1.0	20m	12		175J	A277r
16	TZPD16		16		5.0m	40	9.0		DO35
17	TZPY16		16		25m	10	9.0		DO41
18	1N2047B	5	16		500m	3.0		150A	S19a
19	BZV49C16	5	16		5.0m	40	3.0	150J	M1008
20	CD4745A	5.0	16		15m	16		200	u52
21	CD5353B	5	16		75m	2.5	7.9	200J	u39b
22	MMBZ5246	5	16		7.8m	17			M500
23	NC16	5	16		5.0m	40	8.0		u47
24▼	TMPZ5246	5.0	16		7.8m	17			TO236⊠
25	DSZ3016	10	16		50m	7.0	7.0		A266
26	MA3160	5.0	16	150m	5.0m	40	10	125J	M713b
27	RD16MB		16	200m	5.0m	40		150J	M500c
28	RD16MB2	3	16	200m	5.0m	40		150	
29	BZX84C16	5	16	200m	5.0m	40	8.0	150J	M500d
30	SZ16	4	16	.25	5.0m	95	.81	150J	C1f
31	1N719A	5	16	250m	12m	15	7.4	175A	DO7
32	1N4110	5	16	.25	.25m	100		200J	DO7
33	1N4703	5	16	.25	.05m			200A	DO14
34	02Z16A	5	16	250m	3.5m	90	8.7	175J	DO35
35	BZX59C16	5	16	250m	5.0m	60	8.0	150A	DO7
36	BZY85C16V5	5	16	.25 §	5.0m	40	9.5	150J	A171f
37	PD6019,A	5†	16	.25	1.0m	55		150	A109
38	PD6060	5	16	.25	5.0m	16		150	A2c
39	1/4M16Z10	10†	16	250m	3.9m	24		175J	E204h
40	1N719	10	16	250m	12m	15	7.4	175A	DO7
41	1N719B	20	16	.25	12m	15			DO7
42	MC6019,A	5†	16	.30	5.0m	35		175	A2m
43	BZX88C16	5	16	350m	5.0m	40	8.0	175J	A412
44	MA4160	5	16	370m	5.0m	40	10	200J	DO34
45	MTZ16		16	400m	10m	35		175J	DO34
46	TZ16		16	400m	10m	35		175J	DO35
47	1N5536D	1	16	400m§	1.0m	100		175A	DO7
48	1N5741D	1	16	400m§	5.0m	40	8.0	200A	DO35
49	Z5A16	1†	16	400m§	5.0m	50	9.0	200J	DO7
50	1N5536C	2	16	400m§	1.0m	100		175A	DO7
51	1N5741C	2	16	400m§	5.0m	40	8.0	200A	DO35
52	BZX79B16	2	16	400m§	5.0m	40	12mV	200J	DO35
53	1N966B	5	16	400m	7.8m	17		175S	A398a
54	1N3523	5	16	.40	5.0m	16	8.5	200A	DO7
55	1N5536B	5	16	400m§	1.0m	100		175A	DO7
56	1N5741B	5	16	400m§	5.0m	40	8.0	200A	DO35
57	1S2160A	5	16	.40	5.0m	120	7.0	150A	A1
58	1S7160A	5	16	400m	5.0m	100	7.0	175A	A1
59	BZX79C16	5	16	400m§	5.0m	45	12mV	200J	DO35
60	BZX96C16	5	16	400m	5.0m	40	7.5	150J	DO7
61	CD966B	5	16	400m	7.8m	17	8.3	200J	u39a
62	CD4110	5	16	400m	250u	100	7.0	200J	u39a
63	CD5246B	5	16	400m	7.8m	17	8.3	200J	u39a
64	CH966	5	16	400m	7.8m	17	8.3	200J	u10
65	CH4110	5	16	400m	250u	100	8.5	200J	u10
66	CH5246	5	16	400m	7.8m	17	8.3	200J	u10
67	GSZ16A	5	16	400m	10m	35			A69a
68	MA1160	5	16	400m	5.0m	40	10	200J	A24d
69	MZL316	5	16	400m	500u	80	8.2	175J	DO35
70	RD16JB	5	16	400m	5.0m	50		175J	DO35
71	RD16JSB(A)	5.0	16	400m	5.0m	50	7.6	175J	DO34
72	Z5B16	5†	16	400m§	5.0m	50	9.0	200J	DO7
73	1N966A	10	16	400m	7.8m	17		175S	A398a
74	1N5536A	10	16	400m§	1.0m			175A	DO7
75	GSZ16	10	16	400m	10m	35			A69a
76	1N966	20	16	400m	7.8m	17		175S	A398a
77	1N5536	20	16	400m§	1.0m			175A	DO7
78	GZA16		16	500m	5.0m	30 †	9.7	175J	A159
79	1N6005D	1	16	500m	5.0m	36		200J	DO35
80	Z0A16	1†	16	500m	5.0m	20 †	9.0	200J	DO29
81	1N6005C	2	16	500m	5.0m	36		200J	DO35
82	BZV55C16	4.5	16	500m	5.0m	40	12	200J	F139
83	BZV60C16	4.5	16	500m	5.0m	40	12	200J	DO34
84	1N5246B	5	16	500m	7.8m	17	8.3	200A	A398a
85	1N5862B	5	16	500m	7.8m	38		150C	M859
86	1N6005B	5	16	500m	5.0m	36		200J	DO35
87	BZX46C16	5	16	500m	7.8m	17	11	175A	DO35
88	BZX55C16	5	16	500m	5.0m	40	8.0	175A	DO35
89	BZX55C16V	5	16	500m	5.0m	40	12mV	175J	DO35
90	BZX83C16	5	16	500m	5.0m	40	8.0	175A	DO35
91	BZX83C16V	5†	16	500m	5.0m	170	12mV	175J	DO35
92	BZX97C16	5	16	500m	5.0m	40	8.0	175J	DO35
93	BZY88C16V	5	16	500m	5.0m	40	13m	175	DO35
94	CTZ16A	5	16	500m	5.0m	160	850	200	DO35
95	MA5160	5	16	500m	5.0m	40	10	125J	M990
96	MLL5246B	5.0	16	500m§	7.8m	17	8.3	200J	F140
97	MTZ619,A	5†	16	.50	5.0m	35		175A	A60e
98	MZ316,A,B,C								
		5	16	500m	5.0m	30	7.5	175J	DO35
99	PS8918	5	16	.50	10m	12	8.7	150	A60p
100	RD16EB	5	16	500m	10m	35	7.6	175J	DO35
101▼	SZP5-16-5-1								
		5.0	16	500m	1.0m			175	u5a
102▼	SZ.5-16-5-25								
		5.0	16	500m	25m			175	u5a
103	Z0B16	5†	16	500m	5.0m	20 †	9.0	200J	DO29
104	ZMM16	5†	16	500m	5.0m	40	9.0	175J	F135
105	ZMM5246B	5.0	16	500m§	7.8m	17	8.3	200J	F139
106	ZPD16	5	16	500m	5.0m	40	8.5	175J	DO35

LINE No.	4 TYPE No.	3 TOL ± (%)	1 NOM. REF. VOLT. (V)	2 PD @ 25°C MAX (W)	TEST CUR. Izt (A)	DYN. IMP. MAX (Ω)	TEMP. COEFF Tc MAX	TEMP MAX (°C)	DWG. NO.
107	ZPD16V	5†	16	500m	5.0m	170	13mV	175J	DO35
108	05Z16	6.0	16	500m	5.0m	40	8.7	175J	DO35
109	1N5246A	10	16	500m	7.8m	17	8.3	200A	A398a
110	1N5862A	10	16	500m	7.8m	38		150C	M859
111	1N6005A	10	16	500m	5.0m	48		200J	DO35
112	CTZ16	10	16	500m	5.0m	160	850	200	DO35
113	EQA01-16R	10	16	500m	10m	15	.07	125J	A387
114	MLL5246A	10	16	500m§	7.8m	17	8.3	200J	F140
115▼	SZP5-16-10-1								
		10	16	500m	1.0m			175	u5a
116▼	SZ.5-16-10-25								
		10	16	500m	25m			175	u5a
117	ZMM5246A	10	16	500m§	7.8m	17	8.3	200J	F139
118	1N5246	20†	16	.50	7.8m			200A	A398a
119	1N6005	20	16	500m	5.0m	48		200J	DO35
120	MLL5246	20	16	500m§	7.8m	17		200J	F140
121▼	SZP5-16-20-1								
		20	16	500m	1.0m			175	u5a
122▼	SZ.5-16-20-25								
		20	16	500m	25m			175	u5a
123	ZMM5246	20	16	500m§	7.8m	17	8.3	200J	F139
124	1N4637	5	16	.60	7.8m	700	8.3	200A	DO14
125	1N3684B	5	16	750m	7.8m	17	7.0	175S	A1az
126	BZV41C16	5	16	750m	5.0m	40	8.0	175S	A412
127	MC6119,A	5†	16	.75	10m	35		175A	A2d
128	1N3684A	10	16	750m	7.8m	17	7.0	175S	A1az
129	1N3684	20	16	750m	7.8m	17	7.0	175S	A1az
130	HZ16PB		16	800m	20m	12		175J	DO41
131	DZB16		16	1.0	10m	30	12mV	150J	A298ap
132	GZB16		16	1.0		30	12mV		A298ap
133	GZB16C		16	1.0		30	12mV		A298ap
134	MA2160		16	1.0	20m	12	12	200J	A277r
135	Z4A16	1†	16	1.0	25m	12	8.0	200J	DO29
136	SZ16.0	2†	16	1.0	20m	10 †	7.5	150A	A3g
137	1N1776A	5	16	1.0	50m	8.6		175A	DO13⊠
138	1N3025B	5	16	1.0	15m	16		175A	A31a
139	1N4167B	5	16	1.0 §	15m	16		200S	DO29
140	1N4332B	5	16	1.0	16m	16	7.0	300S	DO7
141	1N4409B	5	16	1.0	15m	8.0			A1bc
142	1N4666	5	16	1.0	16m	550	8.3	200A	DO15
143	1N4745A	5	16	1.0	16m	16		200A	DO41
144	1N5568B	5	16	1.0 §	15m	16		200A	A60ac
145	AP16.0A,B	5†	16	1.0 †	7.8m	25			DO35
146	APD16.0A,B	5†	16	1.0 †	16m	25			A1rx
147	BZV85C16	5	16	1.0	15m	15	13mV	200J	DO41
148	BZX78C16	5	16	1.0	10m	10	12mV	200J	
149	BZX85C16	5	16	1.0 §	15m	15	9.0	150A	DO41
150	CD4745	5	16	1.0	15m	16	8.3	200J	u39a
151	CH4745	5	16	1.0	15m	16	7.0	200J	u10
152	CZ16,A,B,D	5†	16	1.0	20m	24	7.0	175	DO15
153	MZ416,A,B,C								
		5	16	1.0	10	16	7.8	175J	DO41
154	PL16Z	5	16	1.0	25m	15	7.5	150J	
155	PS10025B	5	16	1.0	16m	16		175A	A60p
156	PS10069	5	16	1.0	16m	12	8.8	150	A60p
157	RD16P	5.0	16	1.0	5.0m	40	8.1	150J	M1008
158▼	SZ1-16-5-1	5.0	16	1.0	1.0m			175	u5b
159▼	SZ1-16-5-25								
		5.0	16	1.0	25m			175	u5b
160	TZB16B	5	16	1.0 §	1.0m		8.6	175A	A1ty
161	UZ8716	5	16	1.0	15m	16	7.0	175	A380
162	VR16,A,B	5†	16	1.0	15m	16		125A	A1b
163	Z4B16	5†	16	1.0	25m	12	8.0	200J	DO29
164	Z16.0	5†	16	1.0	20m	2.8 †	8.0	150A	DO41
165	ZB16	5†	16	1.0 §	15m	16		150A	A1bc
166	ZB16B	5	16	1.0	15m	16		100C	A1bc
167	ZM4745A	5.0	16	1.0 §	15m	16		200J	F139
168	AW08-16B	5.2	16	1.0	15m	12	7.4	175J	A60au
169	AW08-16A	8.1	16	1.0	15m	12	7.4	175J	A60au
170	1N1776	10	16	1.0	50m	8.6		175A	DO13⊠
171	1N3025A	10	16	1.0	15m	16		175A	A31a
172	1N4167A	10	16	1.0 §	15m	16		200S	DO29
173	1N4332A	10	16	1.0	16m	16	7.0	300S	DO7
174	1N4409A	10	16	1.0	15m	8.0			A1bc
175	1N4745	10	16	1.0	16m	16		200A	DO41
176	1N5568A	10	16	1.0 §	15m	16		200A	A60ac
177	1S231	10	16	1.0	17m	20	7.5	150J	A56a
178	1Z16	10	16	1.0	10m	30	7.5	150J	DO15
179	EQB01-16	10	16	1.0	20m	10	.07	140J	A21b
180▼	SZ1-16-10-1								
		10	16	1.0	1.0m			175	u5b
181▼	SZ1-16-10-25								
		10	16	1.0	25m			175	u5b
182	TZB16A	10	16	1.0 §	1.0m		8.6	175A	A1ty
183	UZ8816	10	16	1.0	15m	16	7.0	175	A380
184	ZB16A	10	16	1.0	15m	16		100C	A1bc
185	ZM4745	10	16	1.0 §	15m	16		200J	F139
186	1N3025	20	16	1.0	15m	16		175A	A31a
187	1N4167	20	16	1.0 §	15m	16		200S	DO29
188	1N4332	20	16	1.0	16m	16	7.0	300S	DO7
189	1N4409	20	16	1.0	15m	8.0		175S	A266a
190	1N5568	20	16	1.0 §	15m			200A	A60ac
191▼	SZ1-16-20-1								
		20	16	1.0	1.0m			175	u5b
192▼	SZ1-16-20-25								
		20	16	1.0	25m			175	u5b
193	1N4837B	5	16	1.2	16m	19	8.3	175	DO29
194	1N4837A	10	16	1.2	16m	19	8.3	175	DO29
195	1N4837	20	16	1.2	16m	19	8.3	175	DO29
196	BZD10C16	5	16	1.3	25m	15	11		DO13
197	BZW22C16	5	16	1.3	25m	10	11		DO41
198	BZX61C16	5	16	1.3	10m	16	6.0	175J	DO15
199	BZX85C16V	5†	16	1.3	15m	500	11mV	175J	DO41
200	BZX87C16	5	16	1.3	10m	10	7.5	200J	A60al
201	BZY97C16	5	16	1.3	25m	15	11		A1rx
202	ZD16	5	16	1.3	25	15	7.0	150J	DO13
203	ZY16	5	16	1.3	25m	15	9.0	150J	A1bg
204	ZPY16	11	16	1.3	50m	10	11	200J	DO41
205	1N5930D	1	16	1.5	23m	10		200J	DO41
206	1N5930C	2	16	1.5	23m	10		200J	DO41

2. VOLTAGE REFERENCE DIODES - $V_Z \geq 13$ V (Cont'd)

IN ORDER OF: (1) REF. VOLTAGE (2) PD MAX (3) TOLERANCE & (4) TYPE NUMBER

LINE No.	4 TYPE No.	3 TOL ± (%)	1 NOM. REF. VOLT. (V)	2 PD @ 25°C MAX (W)	TEST CUR. Izt (A)	DYN. IMP. MAX (Ω)	TEMP. COEFF Tc MAX	TEMP MAX (°C)	DWG. NO.
1	1N3794B	5	16	1.5	23m	11	8.3	175S	C14⊠
2	1N4470	5	16	1.5	16m	10		175A	A60y
3	1N5930B	5	16	1.5	23m	10		200J	DO41
4	1S4016,A	5†	16	1.5	20m	6.0	8.0	150A	DO1
5	BZY95C16	5	16	1.5	20m	9.0	6.8	175J	DO1
6	BZY97C16V	5†	16	1.5	25m	15	13mV	150J	A1bq
7	MC6319,A	5†	16	1.5	50m	31			A1q
8▼	SZ1.5-16-5-1	5.0	16	1.5	1.0m			175	u5b
9	1N3794A	10	16	1.5	23m	11	8.3	175S	C14⊠
10	1N5930A	10	16	1.5	23m	10		200J	DO41
11▼	SZ1.5-16-10-1	10	16	1.5	1.0m			175	u5b
12	1N3794	20	16	1.5	23m	11	8.3	175S	C14⊠
13	1N5930	20	16	1.5	23m	10		200J	DO41
14▼	SZ1.5-16-20-1	20	16	1.5	1.0m			175	u5b
15	2EZ16D5	5	16	2.0	31m	8.0		200J	A1ay
16	2VR16,A,B	5†	16	2.0	31m	12			A3e
17	BZV47C16	5	16	2.0	25m	15	7.0	175J	A344r
18	LMZ16A	5	16	2.0	31m	8.0	8.3	150A	DO41
19	2EZ16D10	10	16	2.0	31m	8.0		200J	A1ay
20	LMZ16	10	16	2.0	31m	8.0	8.3	150A	DO41
21	2EZ16D	20	16	2.0	31m	8.0		200J	A1ay
22	BZV15C16	5	16	2.2	500m	1.2	9.0	150J	M754⊠
23	1N5026A	5	16	2.5	39m	6.6	7.0	150	A1gn
24	BZX70C16	5	16	2.5	20m	9.0	11mV	150J	A171b
25	Z2B16	5†	16	2.5	20m	12	8.0	200J	DO1
26	1N5026	10	16	2.5	39m	6.6	7.0	150	A1gn
27	3EZ16D1	1.0	16	3.0	47m	5.5		150J	A1ay
28	3EZ16D2	2.0	16	3.0	47m	5.5		150J	A1ay
29	3EZ16D3	3.0	16	3.0	47m	5.5		150J	A1ay
30	3EZ16D4	4.0	16	3.0	47	5.5		150J	A1ay
31	1N5072	5	16	3.0	50m	7.0		175A	A146u
32	3EZ16D5	5	16	3.0	47m	5.5		200J	A1ay
33	3VR16,A,B	5†	16	3.0	46m	8.0			A3al
34	BZV16C16	5	16	3.0	31m	16	7.0	175	DO3
35	MZ716	5	16	3.0	50m	7.0	7.0	175A	A146j
36	UZ716	5	16	3.0	50m	7.0	7.0	175	A380
37	3EZ16D10	10	16	3.0	47m	5.5		200J	A1ay
38	MZ816	10	16	3.0	50m	7.0	7.0	175A	A146j
39	UZ816	10	16	3.0	50m	7.0	7.0	175	A380
40	3EZ16D	20	16	3.0	47m	5.5		200J	A1ay
41	MZ916	20	16	3.0	50m	7.0	7.0	175A	A146j
42	UZ916	20	16	3.0	50m	7.0	7.0	175	A380
43▼	BZT03/D16	10	16	3.2	25m	15	11	175J	A94g
44	3T16,A,B	5†	16	3.5	50m	8.6			DO4
45▼	SZ3-16-5-1	5.0	16	5.0	1.0m			175	u5c
46▼	SZ3-16-5-25	5.0	16	5.0	25m			175	u5c
47▼	SZ3-16-10-1	10	16	5.0	1.0m			175	u5c
48▼	SZ3-16-10-25	10	16	5.0	25m			175	u5c
49▼	SZ3-16-20-1	20	16	5.0	1.0m			175	u5c
50▼	SZ3-16-20-25	20	16	5.0	25m			175	u5c
51	HZ16-2L	2	16.1	400m	500u	80	6.5	175J	DO35
52	HZ16-2	3	16.1	400m	5.0m	45	11mV	175J	DO35
53	RD13EN3		16.1	500m	5.0m	18		175J	A277b
54	RD16EL3		16.1	500m	1.0m	18		175J	A277b
55	RD16EN3		16.1	500m	5.0m	18		175J	A277b
56	HZ16EB3	2.6	16.1	500m	10m	18		175J	DO35
57	HZ16H2	3	16.1	500m	5.0m	45	11mV	175J	DO35
58	RD16EB3		16.1	500M	10m	18		175J	A277b
59	HZS16JB2	2.5	16.2	400m	5.0m	50		200J	A380d
60	RD16JSB2(A)	2.5	16.2	400m	5.0m	50	7.6	175J	DO34
61	BZ162	5	16.2	1.0	20m	16	7.5	175J	A60t
62	PR246-RT	5	16.2	1.0	20m	16 †			DO7
63	RD16FB	5	16.2	1.0	20m	12		175J	A297c
64	AW01-16	6	16.2	1.0	15m	12	7.4	150J	A333
65	ZMY16	6	16.2	1.3	25	10	9	200J	F149
66	AU01-16	6	16.2	2.5	40m	12	8.2	165J	A333b
67	3KZ18	10†	16.2	3.0 §	65m		.08		A3ak§
68	RD16FB3		16.3	1.0	20m	12		175J	A277r
69	EQA02-16AB	8	16.4	500m	10m	20	.07	175J	A1ac
70	RD16MB3	3	16.5	200m	5.0m	40		150	
71	BZY83C16V5	5	16.5	.25	5.0m	75	9.5	150J	C1g
72	RD18EB1		16.6	500m	10m	23		175J	A277b
73	RD18EL1		16.6	500m	1.0m	23		175J	A277b
74	RD18EN1		16.6	500m	5.0m	23		175J	A277G
75	HZ18EB1	2.4	16.6	500m	10m	23		175J	DO35
76	HZ16-3	2	16.7	400m	5.0m	45	11mV	175J	DO35
77	HZ16-3L	2	16.7	400m	500u	80	6.6	175J	DO35
78	RD16JSB3(A)	2.5	16.7	400m	5.0m	50	7.6	175J	DO34
79	HZS16JB3	2.6	16.7	400m	5.0m	50		200J	A380d
80	HZ16H3	2	16.7	500m	5.0m	45	11mV	175J	DO35
81	BZ167	5	16.7	1.0	20m	18	7.6	175J	DO41
82	PS1502	5	16.8	.25	10m	30	.20	150A	A1gc
83	PS1502A	5	16.8	.25	10m	30	.10	150A	A1gc
84	ZS17	5	16.8	750m	5.0m	160	500m	150A	C3h
85	RD18FB1		16.8	1.0	20m	12		175J	A277r
86	1N4059	5	16.8	1.5	10m	30	.50	100	A1ss
87	1N4059A	5	16.8	1.5	10m	30	.20	100	A1ss
88	RD16AN		16.9	250m	10m	30		175J	A277b
89	RD16BN		16.9	1.0	20m	12		150J	A427
90	RD16CN		16.9	3.0	60m	8.0		150J	S547
91	1C5247		17		7.4m	19			u36c
92	1N2047C	5	17		500m	3.0		150A	S19a
93	CD5354B	5	17		70m	2.5	8.0	200J	u39b
94	MMBZ5247	5	17		7.4m	19			M500
95▼	TMPZ5247	5.0	17		7.4m	19			TO236⊠
96	RD18MB1	3	17	200m	5.0m	45		150	
97	SZ17	4	17	.25	5.0m	105	.81	150J	C1f
98	1N4111	5	17	.25	.25m	100		200J	DO7
99	1N4704	5	17	.25	.05m			200A	DO14
100	1/4M17Z10	10†	17	250m	3.7m	26		175J	E204h
101	C5D5247	10	17	320m	7.4m			150S	M713a
102	1N5537D	1	17	400m§	1.0m	100		175A	DO7
103	1N5537C	2	17	400m§	1.0m	100		175A	DO7
104	1N5537B	5	17	400m§	1.0m	100		175A	DO7
105	CD5247B	5	17	400m	7.4m	19	8.4	200J	u39a
106	CH4111	5	17	400m	250u	100	9.0	200J	u10
107	CH5247	5	17	400m	7.4m	19	8.4	200J	u10
108	1N5537A	10	17	400m§	1.0m			175A	DO7
109	1N5537	20	17	400m§	1.0m			175A	DO7
110	1N5247B	5	17	500m	7.4m	19	8.4	200A	A398a
111	1N5863B	5	17	500m	7.4m	42		150C	M859
112	MLL5247B	5.0	17	500m§	7.4m	19	8.4	200J	F140
113▼	SZP5-17-5-1	5.0	17	500m	1.0m			175	u5a
114▼	SZ.5-17-5-25	5.0	17	500m	25m			175	u5a
115	ZMM5247B	5.0	17	500m§	7.4m	19	8.4	200J	F139
116	1N5247A	10	17	500m	7.4m	19	8.4	200A	A398a
117	1N5863A	10	17	500m	7.4m	42		150C	M859
118	EQA01-17R	10	17	500m	10m	15	.07	125J	A387
119	MLL5247A	10	17	500m§	7.4m	19	8.4	200J	F140
120▼	SZP5-17-10-1	10	17	500m	1.0m			175	u5a
121▼	SZ.5-17-10-25	10	17	500m	25m			175	u5a
122	ZMM5247A	10	17	500m§	7.4m	19	8.4	200J	F139
123	1N5247	20†	17	.50	7.4m			200A	A398a
124	MLL5247	20	17	500m§	7.4m	19		200J	F140
125▼	SZP5-17-20-1	20	17	500m	1.0m			175	u5a
126▼	SZ.5-17-20-25	20	17	500m	25m			175	u5a
127	ZMM5247	20	17	500m§	7.4m	19	8.4	200J	F139
128	AP17.0A,B	5†	17	1.0 †	7.4m	30			DO35
129	CZ17,A,B,D	5†	17	1.0	20m	24	7.5	175	DO15
130▼	SZ1-17-5-1	5.0	17	1.0	1.0m			175	u5b
131▼	SZ1-17-5-25	5.0	17	1.0	25m			175	u5b
132	EQB01-17	9	17	1.0	20m	10	.07	140J	A21b
133	1S232	10	17	1.0	17m	20	7.6	150J	A56a
134▼	SZ1-17-10-1	10	17	1.0	1.0m			175	u5b
135▼	SZ1-17-10-25	10	17	1.0	25m			175	u5b
136▼	SZ1-17-20-1	20	17	1.0	1.0m			175	u5b
137▼	SZ1-17-20-25	20	17	1.0	25m			175	u5b
138▼	SZ1.5-17-5-1	5.0	17	1.5	1.0m			175	u5b
139▼	SZ1.5-17-10-1	10	17	1.5	1.0m			175	u5b
140▼	SZ1.5-17-20-1	20	17	1.5	1.0m			175	u5b
141	2EZ17D5	5	17	2.0	29m	9.0		200J	A1ay
142	ZBC17	5†	17	2.0 §	30m	7.0		150A	A1bc
143	ZBC17B	5	17	2.0	30	7.0			A1ty
144	2EZ17D10	10	17	2.0	29m	9.0		200J	A1ay
145	ZBC17A	10	17	2.0	30	7.0			A1ty
146	2EZ17D	20	17	2.0	29m	9.0		200J	A1ay
147	1N5027A	5	17	2.5	37m	7.2	7.5	150	A1gn
148	1N5027	10	17	2.5	37m	7.2	7.5	150	A1gn
149	3EZ17D1	1.0	17	3.0	44m	6.0		150J	A1ay
150	3EZ17D2	2.0	17	3.0	44m	6.0		150J	A1ay
151	3EZ17D3	3.0	17	3.0	44m	6.0		150J	A1ay
152	3EZ17D4	4.0	17	3.0	44	6.0		150J	A1ay
153	3EZ17D5	5	17	3.0	44m	6.0		200J	A1ay
154	ZCC17	5†	17	3.0 §	50m	7.0		150A	A1ey
155	ZCC17B	5	17	3.0	50m	7.0			A1ey
156	3EZ17D10	10	17	3.0	44m	6.0		200J	A1ay
157	ZCC17A	10	17	3.0	50m	7.0			A1ey
158	3EZ17D	20	17	3.0	44m	6.0		200J	A1ay
159▼	SZ3-17-5-1	5.0	17	5.0	1.0m			175	u5c
160▼	SZ3-17-5-25	5.0	17	5.0	25m			175	u5c
161▼	SZ3-17-10-1	10	17	5.0	1.0m			175	u5c
162▼	SZ3-17-10-25	10	17	5.0	25m			175	u5c
163▼	SZ3-17-20-1	20	17	5.0	1.0m			175	u5c
164▼	SZ3-17-20-25	20	17	5.0	25m			175	u5c
165	RD18JSB1(A)	2.5	17.2	400m	5.0m	65	7.9	175J	DO34
166	HZ18-1L	3	17.2	400m	500u	80	6.7	175J	DO35
167	HZ18LH1	3	17.2	400m	500u	80		175J	DO35
168	RD18EB2		17.2	500m	10m	23		175J	A277b
169	RD18EL2		17.2	500m	1.0m	23		175J	A277b
170	RD18EL		17.2	500m	1.0m	23		175J	A277b
171	RD18EN		17.2	500m	5.0m	23		175J	A277G
172	HZ18EB2	2.4	17.2	500m	10m	23		175J	DO35
173	RD16EC	5	17.2	500m	10m	35	7.9	175J	DO35
174	RD18EN2	17.	17.2	500m	5.0m	23		175J	A277G
175	HZ16PC		17.2	800m	20m	12		175J	DO41
176	BZ172	5	17.2	1.0	20m	18	7.6	175J	DO41
177	RD16FC	5	17.2	1.0	20m	12		175J	A297c
178	HZ18-1	2	17.3	400m	5.0m	55	14mV	175J	DO35
179	HZS18JB1	2.4	17.3	400m	5.0m	65		200J	A380d
180	HZ18H1	2	17.3	500m	5.0m	55	14mV	175J	DO35
181	RD18FB2		17.4	1.0	20m	12		175J	A277r
182	EQA02-17AB	8	17.6	500m	10m	25	.07	175J	A1ac
183	BZ177	5	17.7	1.0	20m	20	7.7	175J	A60t
184	PR247-RT	5	17.7	1.0	20m	20 †			DO7
185	BZY88C18	5	17.8	400m	5.0m	45	8.3	200J	DO7
186	HZ18-2	2	17.9	400m	5.0m	55	14mV	175J	DO35
187	HZ18-2L	2	17.9	400m	500u	80	6.8	175J	DO35
188	HZ18LH2	2	17.9	400m	500u	80		175J	DO35
189	HZS18JB2	2.5	17.9	400m	5.0m	65		200J	A380d
190	HZ18H2	2	17.9	500m	5.0m	55	14mV	175J	DO35

SYMBOLS AND CODES EXPLAINED IN INTERPRETER

2. VOLTAGE REFERENCE DIODES - $V_Z \geq 13$ V (Cont'd)

IN ORDER OF: (1) REF. VOLTAGE (2) PD MAX (3) TOLERANCE & (4) TYPE NUMBER

LINE No.	4 TYPE No.	3 TOL ± (%)	1 NOM. REF. VOLT. (V)	2 PD @ 25°C MAX (W)	TEST CUR. Izt (A)	DYN. IMP. MAX (Ω)	TEMP. COEFF Tc MAX	TEMP MAX (°C)	DWG. NO.
1	HZ18EB3	2.5	17.9	500m	10m	23		175J	DO35
2	AW01-18	6	17.9	1.0	15m	15	7.6	150J	A333
3	RD18FB	6	17.9	1.0	20m	12		175J	A297c
4	ZMY18	6	17.9	1.3	25	11	9	200J	F149
$V_Z \geq 18$ V									
8	TZPD18		18		5.0m	50	9.0		DO35
9	TZPY18		18		25m	11	9.0		DO41
10	1N2048A	5	18		500m	3.0		150A	S19a
11	BZV49C18	5	18		5.0	50	3.0	150J	M1008
12	CD4746A	5.0	18		14m	20		200	u52
13	CD5355B	5	18		65m	2.5	8.1	200J	u39b
14	MMBZ5248	5	18		7.0m	21			M500
15	NC18	5	18		5.0m	45	8.0		u47
16▼	TMPZ5248	5.0	18		7.0m	21			TO236☑
17	DSZ3018	10	18		40m	8.0	8.0		A266
18	ZTK18	10	18		5.0m	25	200m	150J	DO35
19	1N1989B	1	18	150m	1.0m	70	9.2	150	C1
20	1N1989A	5	18	150m	1.0m	70	9.2	150	C1
21	MA3180	5.0	18	150m	5.0m	45	12	125J	M713b
22	1N1989	10	18	150m	1.0m	70	9.2	150	C1
23	RD18MB		18	200m	5.0m	45		150J	M500c
24	1N1935B	1	18	200m	1.0m	70	9.2	150A	A82c
25	RD18MB2	3	18	200m	5.0m	45		150	
26	1N1935A	5	18	200m	1.0m	70	9.2	150A	A82c
27	BZX84C18	5	18	200m	5.0m	45	8.0	150J	M500d
28	1N1935	10	18	200m	1.0m	70	9.2	150A	A82c
29	SZ18	4	18	.25	5.0m	125	.80	150J	C1f
30	1N720A	5	18	250m	12m	17	7.7	175A	DO7
31	1N4112	5	18	.25	.25m	100		200J	DO7
32	1N4705	5	18	.25	.05m			200A	DO14
33	02Z18A	5	18	250m	3.5m	100	9.2	175J	DO35
34	BZX59C18	5	18	250m	5.0m	70	8.0	150A	DO7
35	BZY83C18	5	18	.25	5.0m	110	9.5	150J	C1g
36	BZY85C18	5	18	.25 §	5.0m	55	9.5	150J	A171f
37	PD6020,A	5†	18	.25	1.0m	70		150	A109
38	PD6061	5	18	.25	5.0m	18		150	A2c
39	1/4M18Z10	10†	18	250m	3.5m	28		175J	E204h
40	1N720	10	18	250m	12m	17	7.7	175A	DO7
41	BZY83D18	10	18	.25	5.0m	100	10	150J	C1g
42	1N720B	20	18	.25	12m	17			DO7
43	PTC510	10	18	252m†	14m	20			A1bc
44	MC6020,A	5†	18	.30	5.0m	41		175	A2m
45	C5D5248	10	18	320m	7.0m			150S	M713a
46	BZX88C18	5	18	350m	5.0m	45	8.0	175J	A412
47	MA4180	5	18	370m	5.0m	45	12	200J	DO34
48	MTZ18		18	400m	10m	45		175J	DO34
49	TZ18		18	400m	10m	45		175J	DO35
50	1N1962B	1	18	400m	1.0m	70	9.2	150	DO7
51	1N5538D	1	18	400m§	1.0m	100		175A	DO7
52	1N5742D	1	18	400m§	5.0m	45	8.3	200A	DO35
53	Z5A18	1†	18	400m§	5.0m	55	9.0	200J	DO7
54	1N5538C	2	18	400m§	1.0m	100		175A	DO7
55	1N5742C	2	18	400m§	5.0m	45	8.3	200A	DO35
56	BZX79B18	2	18	400m§	5.0m	45	14mV	200J	DO35
57	RD18JSB2(A)								
		2.5	18	400m	5.0m	65	7.9	175J	DO34
58	1N667	5	18	.40	5.0m	26	8.0	200S	A31b
59	1N967B	5	18	400m	7.0m	21		175S	A398a
60	1N1962A	5	18	400m	1.0m	70	9.2	150	DO7
61	1N3524	5	18	.40	5.0m	18	9.0	200A	DO7
62	1N5538B	5	18	400m§	1.0m	100		175A	DO7
63	1N5742B	5	18	400m§	5.0m	45	8.3	200A	DO35
64	1S2180A	5	18	400m	5.0m	50	8.0	150A	A1
65	BZX79C18	5	18	400m§	5.0m	55	14mV	200J	DO35
66	BZX96C18	5	18	400m	5.0m	55	7.5	150J	DO7
67	CD967B	5	18	400m	7.0m	21	8.5	200J	u39a
68	CD5248B	5	18	400m	7.0m	21	8.5	200J	u39a
69	CH967	5	18	400m	7.0m	21	8.5	200J	u10
70	CH4112	5	18	400m	250u	100	9.0	200J	u10
71	CH5248	5	18	400m	7.0m	21	8.5	200J	u10
72	GSZ18A	5	18	400m	10m	45			A69a
73	MA1180	5	18	400m	5.0m	45	12	200J	A24d
74	MZL318	5	18	400m	500u	80	8.5	175J	DO35
75	RD18JB	5	18	400m	5.0m	65		175J	DO35
76	RD18JSB(A)	5.0	18	400m	5.0m	65	7.9	175J	DO34
77	Z5B18	5†	18	400m§	5.0m	55	9.0	200J	DO7
78	1N967A	10	18	400m	7.0m	21		175S	A398a
79	1N1962	10	18	400m	1.0m	70	9.2	150	DO7
80	1N5538A	10	18	400m§	1.0m			175A	DO7
81	1S2180	10	18	400m	5.0m	50	8.0	150A	A1
82	GSZ18	10	18	400m	10m	45			A69a
83	1N967	20	18	400m	7.0m	21		175S	A398a
84	1N5538	20	18	400m§	1.0m			175A	DO7
85	GZA18		18	500m	5.0m	30 †	9.9	175J	A159
86	1N6006D	1	18	500m	5.0m	42		200J	DO35
87	Z0A18	1†	18	500m	5.0m	25 †	9.0	200J	DO29
88	1N6006C	2	18	500m	5.0m	42		200J	DO35
89	1N5248B	5	18	500m	7.0m	21	8.5	200A	A398a
90	1N5864B	5	18	500m	7.0m	48		150C	M859
91	1N6006B	5	18	500m	5.0m	42		200J	DO35
92	BZX46C18	5	18	500m	7.0m	21	11	175A	DO35
93	BZX55C18	5	18	500m	5.0m	55	8.0	175A	DO35
94	BZX55C18V	5	18	500m	5.0m	50	13mV	175J	DO35
95	BZX83C18	5	18	500m	5.0m	55	8.0	175A	DO35
96	BZX83C18V	5†	18	500m	5.0m	170	14mV	175J	DO35
97	BZY88C18V	5	18	500m	5.0m	45	15m	175	DO35
98	CTZ18A	5	18	500m	5.0m	180	900	200	DO35
99	MA5180	5	18	500m	5.0m	45	12	125J	M990
100	MLL5248B	5.0	18	500m§	7.0m	21	8.5	200J	F140
101	MTZ620,A	5†	18	.50	5.0m	41		175A	A60e
102	MZ318,A,B	5	18	500m	5.0m	30	7.8	175J	DO35
103	PS8919	5	18	.50	10m	14	9.0	150	A60p
104	RD18EB	5	18	500m	10m	45	7.8	175J	DO35
105▼	SZP5-18-5-1	5.0	18	500m	1.0m			175	u5a
106▼	SZ.5-18-5-25	5.0	18	500m	25m			175	u5a
107	Z0B18	5†	18	500m	5.0m	25 †	9.0	200J	DO29

LINE No.	4 TYPE No.	3 TOL ± (%)	1 NOM. REF. VOLT. (V)	2 PD @ 25°C MAX (W)	TEST CUR. Izt (A)	DYN. IMP. MAX (Ω)	TEMP. COEFF Tc MAX	TEMP MAX (°C)	DWG. NO.
108	ZMM5248B	5.0	18	500m§	7.0m	21	8.5	200J	F139
109	ZPD18	5	18	500m	5.0m	50	9.0	175J	DO35
110	ZPD18V	5†	18	500m	5.0m	170	15mV	175J	DO35
111	05Z18	6.0	18	500m	5.0m	40	9.2	175J	DO35
112	ZMM18	6†	18	500m	5.0m	50	9.0	175J	F135
113	BZX97C18	7	18	500m	5.0m	50	8.0	175J	DO35
114	BZV55C18	7.1	18	500m	5.0m	45	14	200J	F139
115	BZV60C18	7.1	18	500m	5.0m	45	14	200J	DO34
116	1N3405	10	18	500m	10m	25	5.0	200S	P5
117	1N3418	10	18	.50	1.0m	190	6.3	200A	P5
118	1N5248A	10	18	500m	7.0m	21	8.5	200A	A398a
119	1N5864A	10	18	500m	7.0m	48		150C	M859
120	1N6006A	10	18	500m	5.0m	55		200J	DO35
121	CTZ18	10	18	500m	5.0m	180	900	200	DO35
122	EQA01-18R	10	18	500m	10m	15	.07	125J	A387
123	MLL5248A	10	18	500m§	7.0m	21	8.5	200J	F140
124▼	SZP5-18-10-1	10	18	500m	1.0m			175	u5a
125▼	SZ.5-18-10-25	10	18	500m	25m			175	u5a
126	ZMM5248A	10	18	500m§	7.0m	21	8.5	200J	F139
127	1N5248	20†	18	.50	7.0m			200A	A398a
128	1N6006	20	18	500m	5.0m	55		200J	DO35
129	MLL5248	20	18	500m§	7.0m	21		200J	F140
130▼	SZP5-18-20-1	20	18	500m	1.0m			175	u5a
131▼	SZ.5-18-20-25	20	18	500m	25m			175	u5a
132	ZMM5248	20	18	500m§	7.0m	21	8.5	200J	F139
133	1N4638	5	18	.60	7.0m	750	8.5	200A	DO14
134	1N1515A	5	18	750m	8.0m	16	8.5	200S	DO12
135	1N2039A	5	18	.75	5.0m	200	8.0	150J	DO12
136	1N3685B	5	18	750m	7.0m	21	7.5	175S	A1az
137	BZV41C18	5	18	750m	5.0m	45	8.0	175S	A412
138	MC6120,A	5†	18	.75	10m	41		175A	A2d
139	1N1515	10	18	750m	8.0m	16	8.5	200S	DO12
140	1N3685A	10	18	750m	7.0m	21	7.5	175S	A1az
141	1N3685	20	18	750m	7.0m	21	7.5	175S	A1az
142	HZ18PB		18	800m	20m	12		175J	DO41
143	DZB18		18	1.0	10m	30	14mV	150J	A298ap
144	GZB18		18	1.0		30	14mV		A298ap
145	GZB18C		18	1.0		30	14mV		A298ap
146	MA2180		18	1.0	20m	15	14	200J	A277r
147	RD18FB3		18	1.0	20m	12		175J	A277r
148	1N1879B	1	18	1.0	25m	2.6 †	6.2	175A	DO13
149	Z4A18	1†	18	1.0	25m	15	8.0	200J	DO29
150	1N1428	5	18	1.0	10m	20 †	8.0	200A	A154
151	1N1526A	5	18	1.0	10m	25	8.5	200S	DO3
152	1N1777A	5	18	1.0	50m	11		175A	DO13☑
153	1N1879A	5	18	1.0	25m	9.0	6.2	200C	A41e
154	1N3026B	5	18	1.0	14m	20		175A	A31a
155	1N4168B	5	18	1.0 §	14m	20		200S	DO29
156	1N4333B	5	18	1.0	14m	20	7.5	300S	DO7
157	1N4410B	5	18	1.0	14m	10	7.5	175A	A1cm
158	1N4667	5	18	1.0	14m	600	8.5	200A	DO15
159	1N4746A	5	18	1.0	14m	20		200A	DO41
160	1N5569B	5	18	1.0 §	14m	20		200A	A60ac
161	AP18.0A,B	5†	18	1.0 †	7.0m	30			DO35
162	APD18.0A,B	5†	18	1.0 †	14m	25			A1rx
163	BZV85C18	5	18	1.0	15m	20	14mV	200J	DO41
164	BZX78C18	5	18	1.0	10m	15	14mV	200J	
165	BZX85C18	5	18	1.0 §	15m	20	9.0	150A	DO41
166	CD4746	5	18	1.0	14m	20	8.5	200J	u39a
167	CH4746	5	18	1.0	14m	20	7.5	200J	u10
168	CZ18,A,B,D	5†	18	1.0	14m	20	7.5	175	DO15
169	MZ418,A,B	5	18	1.0	10	20	7.9	175J	DO41
170	PL18Z	5	18	1.0	25m	15	7.5	150J	
171	PS10026B	5	18	1.0	14m	20		175A	A60p
172	PS10070	5	18	1.0	14m	16	9.2	150	A60p
173	RD18P	5.0	18	1.0	5.0m	45	8.4	150J	M1008
174▼	SZ1-18-5-1	5.0	18	1.0	1.0m			175	u5b
175▼	SZ1-18-5-25	5.0	18	1.0	25m			175	u5b
176	TZB18B	5	18	1.0 §	1.0m		8.8	175A	A1ty
177	UZ8718	5	18	1.0	14m	20	8.0	175	A380
178	VR18,A,B	5†	18	1.0	14m	20		125A	A1b
179	Z4B18	5†	18	1.0	25m	15	8.0	200J	DO29
180	Z18.0	5†	18	1.0	20m	4.6 †	7.0	150A	DO41
181	ZB18	5†	18	1.0 §	14m	20		150A	A1bc
182	ZB18B	5	18	1.0	14m	20		100C	A1bc
183	ZM4746A	5.0	18	1.0 §	14m	20		200J	F139
184	AW08-18B	5.2	18	1.0	15m	15	7.6	175J	A60au
185	AW08-18A	8.4	18	1.0	15m	15	7.6	175J	A60au
186	1N1526	10	18	1.0	10m	25	8.5	200S	DO3
187	1N1777	10	18	1.0	50m	11		175A	DO13☑
188	1N1879	10	18	1.0	25m	9.0	6.2	200C	A41e
189	1N3026A	10	18	1.0	14m	20		175A	A31a
190	1N4168A	10	18	1.0 §	14m	20		200S	DO29
191	1N4333A	10	18	1.0	14m	20	7.5	300S	DO7
192	1N4410A	10	18	1.0	14m	10	7.5	175A	A1cm
193	1N4746	10	18	1.0	14m	20		200A	DO41
194	1N5569A	10	18	1.0 §	14m	20		200A	A60ac
195	1S233	10	18	1.0	17m	20	7.7	150J	A56a
196	1Z18	10	18	1.0	10m	30	7.8	150J	DO15
197	EQB01-18	10	18	1.0	20m	10	.07	140J	A21b
198	KS518A	10	18	1.0	5.0m	25 †	10	100C	A378
199▼	SZ1-18-10-1	10	18	1.0	1.0m			175	u5b
200▼	SZ1-18-10-25	10	18	1.0	25m			175	u5b
201	TZB18A	10	18	1.0 §	1.0m		8.8	175A	A1ty
202	UZ8818	10	18	1.0	14m	20	8.0	175	A380
203	ZB18A	10	18	1.0	14m	20		100C	A1bc
204	ZM4746	10	18	1.0 §	14m	20		200J	F139
205	1N3026	20	18	1.0	14m	20		175A	A31a
206	1N4168	20	18	1.0 §	14m	20		200S	DO29
207	1N4333	20	18	1.0	14m	20	7.5	300S	DO7
208	1N4410	20	18	1.0	14m	10		175S	A266a
209	1N5569	20	18	1.0 §	14m			200A	A60ac

SYMBOLS AND CODES EXPLAINED IN INTERPRETER

2. VOLTAGE REFERENCE DIODES - $V_Z \geq 18$ V (Cont'd)

IN ORDER OF: (1) REF. VOLTAGE (2) PD MAX (3) TOLERANCE & (4) TYPE NUMBER

LINE No.	4 TYPE No.	3 TOL ± (%)	1 NOM. REF. VOLT. (V)	2 PD @ 25°C MAX (W)	TEST CUR. Izt (A)	DYN. IMP. MAX (Ω)	TEMP. COEFF Tc MAX	TEMP MAX (°C)	DWG. NO.
1▼	SZ1-18-20-1								
		20	18	1.0	1.0m			175	u5b
2▼	SZ1-18-20-25								
		20	18	1.0	25m			175	u5b
3	1N4838B	5	18	1.2	14m	20	8.5	175	DO29
4	1N4838A	10	18	1.2	14m	20	8.5	175	DO29
5	1N4838	20	18	1.2	14m	20	8.5	175	DO29
6	BZX61C18	5	18	1.3	10m	20	6.0	175J	DO15
7	BZX85C18V	5†	18	1.3	15m	500	13mV	175J	DO41
8	BZX87C18	5	18	1.3	10m	15	7.7	200J	A60al
9	BZY97C18	5	18	1.3	25m	15	11		A1rx
10	ZD18	5	18	1.3	25	15	7.0	150J	DO13
11	ZY18	5	18	1.3	25m	15	9.0	150J	A1bg
12	BZD10C18	7	18	1.3	25m	15	11		DO13
13	BZW22C18	7	18	1.3	25m	11	11		DO41
14	ZPY18	12	18	1.3	25m	11	11	200J	DO41
15	1N5931D	1	18	1.5	20m	12		200J	DO41
16	1N5931C	2	18	1.5	20m	12		200J	DO41
17	1N3795B	5	18	1.5	21m	13	8.5	175S	C14☑
18	1N4471	5	18	1.5	14m	11		175A	A60y
19	1N5931B	5	18	1.5	20m	12		200J	DO41
20	1S4018,A	5†	18	1.5	20m	7.5	8.0	150A	DO1
21	BZY95C18	5	18	1.5	20m	11	6.6	175J	DO1
22	BZY97C18V	5†	18	1.5	25m	15	15mV	150J	A1bq
23	MC6320,A	5†	18	1.5	50m	35			A1q
24▼	SZ1.5-18-5-1								
		5.0	18	1.5	1.0m			175	u5b
25	1N3795A	10	18	1.5	21m	13	8.5	175S	C14☑
26	1N5931A	10	18	1.5	20m	12		200J	DO41
27▼	SZ1.5-18-10-1								
		10	18	1.5	1.0m			175	u5b
28	1N3795	20	18	1.5	21m	13	8.5	175S	C14☑
29	1N5931	20	18	1.5	20m	12		200J	DO41
30▼	SZ1.5-18-20-1								
		20	18	1.5	1.0m			175	u5b
31	2EZ18D5	5	18	2.0	27m	10		200J	A1ay
32	2VR18,A,B	5†	18	2.0	28m	18			A3e
33	BZV47C18	5	18	2.0	25m	15	7.5	175J	A344r
34	LMZ18A	5	18	2.0	28m	10	8.5	150A	DO41
35	ZBC18	5†	18	2.0 §	28m	8.0		150A	A1bc
36	ZBC18B	5	18	2.0	28	8.0			A1ty
37	2EZ18D10	10	18	2.0	27m	10		200J	A1ay
38	LMZ18	10	18	2.0	28m	10	8.5	150A	DO41
39	ZBC18A	10	18	2.0	28	8.0			A1ty
40	2EZ18D	20	18	2.0	27m	10		200J	A1ay
41	BZV15C18	5	18	2.2	500m	1.5	9.0	150J	M754☑
42	1N5028A	5	18	2.5	35m	7.8	7.5	150	A1gn
43	BZX70C18	5	18	2.5	20m	11	12mV	150J	A171b
44	Z2B18	5†	18	2.5	20m	14	8.0	200J	DO1
45	AU01-18	6	18	2.5	40m	15	8.4	165J	A333b
46	1N5028	10	18	2.5	35m	7.8	7.5	150	A1gn
47	3EZ18D1	1.0	18	3.0	42m	6.0		150J	A1ay
48	3EZ18D2	2.0	18	3.0	42m			150J	A1ay
49	3EZ18D3	3.0	18	3.0	42m	6.0		150J	A1ay
50	3EZ18D4	4.0	18	3.0	42	6.0		150J	A1ay
51	1N5073	5	18	3.0	40m	8.0		175A	A146u
52	3EZ18D5	5	18	3.0	42m	6.0		200J	A1ay
53	3VR18,A,B	5†	18	3.0	42m	10			A3al
54	BZV16C18	5	18	3.0	28m	20	7.5	175	DO3
55	MZ718	5	18	3.0	40m	8.0	8.0	175A	A146j
56	UDZ718	5	18	3.0	40m	8.0		175A	A356a
57	UZ718	5	18	3.0	40m	8.0	8.0	175A	A380
58	ZCC18	5†	18	3.0 §	40m	8.0		150A	A1ey
59	ZCC18B	5	18	3.0	40m	8.0			A1ey
60	3EZ18D10	10	18	3.0	42m	6.0		200J	A1ay
61	3KZ20	10†	18	3.0 §	65m		.08		A3ak§
62	MZ818	10	18	3.0	40m	8.0	8.0	175A	A146j
63	UZ818	10	18	3.0	40m	8.0	8.0	175A	A380
64	ZCC18A	10	18	3.0	40m	8.0			A1ey
65	3EZ18D	20	18	3.0	42m	6.0		200J	A1ay
66	MZ918	20	18	3.0	40m	8.0	8.0	175A	A146j
67	UZ918	20	18	3.0	40m	8.0	8.0	175A	A380
68▼	BZT03/D18	10	18	3.2	25m	15	11	175J	A94g
69	1N1596A	5	18	3.5	35m	9.0	8.5	200S	DO4
70	1N1596	10	18	3.5	35m	9.0	8.5	200S	DO4
71▼	SZ3-18-5-1	5.0	18	5.0	1.0m			175	u5c
72▼	SZ3-18-5-25								
		5.0	18	5.0	25m			175	u5c
73▼	SZ3-18-10-1								
		10	18	5.0	1.0m			175	u5c
74▼	SZ3-18-10-25								
		10	18	5.0	25m			175	u5c
75▼	SZ3-18-20-1								
		20	18	5.0	1.0m			175	u5c
76▼	SZ3-18-20-25								
		20	18	5.0	25m			175	u5c
77	RD19AL		18.2	250m	10m	50		175J	A277b
78	RD19BL		18.2	1.0	20m	15		150J	A427
79	BZ182	5	18.2	1.0	20m	20	7.7	175J	DO41
80	RD19CL		18.2	3.0	60m	10		150J	S547
81	RD18EB3		18.3	500m	10m	23		175J	A277b
82	RD18EL3		18.3	500m	1.0m	23		175J	A277b
83	RD18EN3		18.3	500m	5.0m	23		175J	A277G
84	1N1317A	5	18.5	150m	200u			150A	C1
85	1N1317	10	18.5	150m	200u			150A	C1
86	RD18MB3	3	18.5	200m	5.0m	45		150	
87	HZ18-3	2	18.5	400m	5.0m	55	14mV	175J	DO35
88	HZ18-3L	2	18.5	400m	500u	80	6.9	175J	DO35
89	HZ18LH3	2	18.5	400m	500u	80		175J	DO35
90	RD20EB1		18.5	500m	10m	28		175J	A277b
91	RD20EL1		18.5	500m	1.0m	28		175J	A277b
92	RD20EN1		18.5	500m	5.0m	28		175J	A277G
93	HZ18H3	2	18.5	500m	5.0m	55	14mV	175J	DO35
94	HZ20EB1	2.4	18.5	500m	10m	28		175J	DO35
95	1S2131	8	18.5	1.0	20m	10		150J	A41b
96	1N4060	5	18.5	1.5	10m	30	.50	100	A1ss
97	1N4060A	5	18.5	1.5	10m	30	.20	100	A1ss
98	RD18JSB3(A)								
		2.5	18.6	400m	5.0m	65	7.9	175J	DO34
99	HZS18JB3	2.6	18.6	400m	5.0m	65		200J	A380d
100	1N1737	5	18.6	.60	7.5m	60	80	150C	A69x
101	1N1737A	5	18.6	.60	7.5m	60	40	150C	A69x
102	ZS18.6	5†	18.6	750m	7.5m	45	500m	150A	C3h
103	RD20FB1		18.7	1.0	20m	14		175J	A277r
104	BZ187	5	18.7	1.0	20m	20	7.8	175J	DO41
105	EQA02-18AB	8	18.8	500m	10m	30	.07	175J	A1ac
106	1N2048B	5	19		500m	3.0		150A	S19a
107	CD5356B	5	19		65m	3.0	8.2	200J	u39b
108	MMBZ5249	5	19		6.6m	23			M500
109▼	TMPZ5249	5.0	19		6.6m	23			TO236☑
110	RD19A	10	19	.20	5.0m	80	8.5	150S	A1dw
111	RD19AK		19.0	250m	10m	50		175J	A277b
112	SZ19	4	19	.25	5.0m	145	.80	150J	C1f
113	1N768A	5	19	250m	5.0m	100	8.0	150	DO7
114	1N4113	5	19	.25	.25m	150		200J	DO7
115	1N4706	5	19	.25	.05m			200A	DO14
116	1/4M19Z10	10†	19	250m	3.3m	30		175J	E204h
117	1N768	10	19	250m	5.0m	100		150A	A398
118	1N5539D	1	19	400m§	1.0m	100		175A	DO7
119	1N5539C	2	19	400m§	1.0m	100		175A	DO7
120	1N5539B	5	19	400m§	1.0m	100		175A	DO7
121	CD5249B	5	19	400m	6.6m	23	8.6	200J	u39a
122	CH4113	5	19	400m	250u	150	9.0	200J	u10
123	CH5249	5	19	400m	6.6m	23	8.6	200J	u10
124	1N5539A	10	19	400m§	1.0m			175A	DO7
125	1N5539	20	19	400m§	1.0m			175A	DO7
126	1N5249B	5	19	500m	6.6m	23	8.6	200A	A398a
127	1N5865B	5	19	500m	6.6m	52		150C	M859
128	MLL5249B	5.0	19	500m§	6.6m	23	8.6	200J	F140
129	ZMM5249B	5.0	19	500m§	6.6m	23	8.6	200J	F139
130	1N5249A	10	19	500m	6.6m	23	8.6	200A	A398a
131	1N5865A	10	19	500m	6.6m	52		150C	M859
132	EQA01-19R	10	19	500m	10m	15	.07	125J	A387
133	MLL5249A	10	19	500m§	6.6m	23	8.6	200J	F140
134	ZMM5249A	10	19	500m§	6.6m	23	8.6	200J	F139
135	1N5249	20†	19	.50	6.6m			200A	A398a
136	MLL5249	20	19	500m§	6.6m	23		200J	F140
137	ZMM5249	20	19	500m§	6.6m	23	8.6	200J	F139
138	1N2039	10	19	750m	5.0m	200		150A	DO12
139	RD19BK		19.0	1.0	20m	15		150J	A427
140	AP19.0A,B	5†	19	1.0 †	6.6m	30			DO35
141	CZ19,A,B,D	5†	19	1.0	20m	26	7.5	175	DO15
142	1S234	10	19	1.0	17m	20	7.9	150J	A56a
143	EQB01-19	10	19	1.0	20m	10	.07	140J	A21b
144	2EZ19D5	5	19	2.0	26m	11		200J	A1ay
145	ZBC19	5†	19	2.0 §	26m	9.0		150A	A1bc
146	ZBC19B	5	19	2.0	26	9.0			A1ty
147	2EZ19D10	10	19	2.0	26m	11		200J	A1ay
148	ZBC19A	10	19	2.0	26	9.0			A1ty
149	2EZ19D	20	19	2.0	26m	11		200J	A1ay
150	1N5029A	5	19	2.5	33m	8.4	7.5	150	A1gn
151	1N5029	10	19	2.5	33m	8.4	7.5	150	A1gn
152	RD19CK		19.0	3.0	60m	10		150J	S547
153	3EZ19D1	1.0	19	3.0	40m	7.0		150J	A1ay
154	3EZ19D2	2.0	19	3.0	40m	7.0		150J	A1ay
155	3EZ19D3	3.0	19	3.0	40m	7.0		150J	A1ay
156	3EZ19D4	4.0	19	3.0	40	7.0		150J	A1ay
157	3EZ19D5	5	19	3.0	40m	7.0		200J	A1ay
158	ZCC19	5†	19	3.0 §	40m	9.0		150A	A1ey
159	ZCC19B	5	19	3.0	40m	9.0			A1ey
160	3EZ19D10	10	19	3.0	40m	7.0		200J	A1ay
161	ZCC19A	10	19	3.0	40m	9.0			A1ey
162	3EZ19D	20	19	3.0	40m	7.0		200J	A1ay
163	RD20EB2		19.1	500m	10m	28		175J	A277b
164	RD20EL2		19.1	500m	1.0m	28		175J	A277b
165	RD20EN2		19.1	500m	5.0m	28		175J	A277G
166	HZ20EB2	2.4	19.1	500m	10m	28		175J	DO35
167	RD18EC	5	19.1	500m	10m	45	7.8	175J	DO35
168	HZ18PC		19.1	800m	20m	12		175J	DO41
169	RD18FC	6	19.1	1.0	20m	12		175J	A297c
170	HZ20-1	2	19.2	400m	2.0m	60	16mV	175J	DO35
171	HZ20-1L	2	19.2	400m	500u	100	7.0	175J	DO35
172	RD20JSB1(A)								
		2.5	19.2	400m	5.0m	85	8.2	175J	DO34
173	1N4916	5	19.2	.40	.50m	600	1.0	175	DO7
174	1N4916A	5	19.2	.40	.50m	600	1.0	175	DO7
175	1N4917	5	19.2	.40	.50m	600	.50	175	DO7
176	1N4917A	5	19.2	.40	.50m	600	.50	175	DO7
177	1N4918	5	19.2	.40	.50m	600	.20	175	DO7
178	1N4918A	5	19.2	.40	.50m	600	.20	175	DO7
179	1N4919	5	19.2	.40	1.0m	300	1.0	175	DO7
180	1N4919A	5	19.2	.40	1.0m	300	1.0	175	DO7
181	1N4920	5	19.2	.40	1.0m	300	.50	175	DO7
182	1N4920A	5	19.2	.40	1.0m	300	.50	175	DO7
183	1N4921	5	19.2	.40	1.0m	300	.20	175	DO7
184	1N4921A	5	19.2	.40	1.0m	300	.20	175	DO7
185	1N4922	5	19.2	.40	2.0m	150	1.0	175	DO7
186	1N4922A	5	19.2	.40	2.0m	150	1.0	175	DO7
187	1N4923	5	19.2	.40	2.0m	150	.50	175	DO7
188	1N4923A	5	19.2	.40	2.0m	150	.50	175	DO7
189	1N4924	5	19.2	.40	2.0m	150	.20	175	DO7
190	1N4924A	5	19.2	.40	2.0m	150	.20	175	DO7
191	1N4925	5	19.2	.40	4.0m	75	1.0	175	DO7
192	1N4925A	5	19.2	.40	4.0m	75	1.0	175	DO7
193	1N4926	5	19.2	.40	4.0m	75	.50	175	DO7
194	1N4926A	5	19.2	.40	4.0m	75	.50	175	DO7
195	1N4927	5	19.2	.40	4.0m	75	.20	175	DO7
196	1N4927A	5	19.2	.40	4.0m	75	.20	175	DO7
197	1N4928	5	19.2	.40	4.0m	75	.10	175	DO7
198	1N4928A	5	19.2	.40	4.0m	75	.10	175	DO7
199	1N4929	5	19.2	.40	7.5m	36	1.0	175	DO7
200	1N4929A	5	19.2	.40	7.5m	36	1.0	175	DO7
201	1N4930	5	19.2	.40	7.5m	36	.50	175	DO7
202	1N4930A	5	19.2	.40	7.5m	36	.50	175	DO7
203	1N4931	5	19.2	.40	7.5m	36	.20	175	DO7
204	1N4931A	5	19.2	.40	7.5m	36	.20	175	DO7
205	1N4932	5	19.2	.40	7.5m	36	.10	175	DO7
206	1N4932A	5	19.2	.40	7.5m	36	.10	175	DO7
207	HZ20H1	2	19.2	500m	2.0m	60	16mV	175J	DO35
208	BZ192	5	19.2	1.0	20m	20	7.8	175J	A60t

SYMBOLS AND CODES EXPLAINED IN INTERPRETER

2. VOLTAGE REFERENCE DIODES - $V_Z \geq 18$ V (Cont'd)

IN ORDER OF: (1) REF. VOLTAGE (2) PD MAX (3) TOLERANCE & (4) TYPE NUMBER

LINE No.	4 TYPE No.	3 TOL ± (%)	1 NOM. REF. VOLT. (V)	2 PD @ 25°C MAX (W)	TEST CUR. Izt (A)	DYN. IMP. MAX (Ω)	TEMP. COEFF Tc MAX	TEMP MAX (°C)	DWG. NO.
1	HZS20JB1	2.4	19.3	400m	5.0m	85		200J	A380d
2	RD20EL		19.3	500m	1.0m	28		175J	A277b
3	RD20EN		19.3	500m	5.0m	28		175J	A277G
4	RD20FB2		19.4	1.0	20m	14		175J	A277r
5	ZMY20	8	19.4	1.3	25	12	9	200J	F149
6	RD20MB1	3	19.5	200m	5.0m	50		150	
7	RD19AM		19.7	250m	10m	50		175J	A277b
8	RD20EB3		19.7	500m	10m	28		175J	A277b
9	RD20EL3		19.7	500m	1.0m	28		175J	A277b
10	RD20EN3		19.7	500m	5.0m	28		175J	A277G
11	HZ20EB3	2.5	19.7	500m	10m	28		175J	DO35
12	RD19BM		19.7	1.0	20m	15		150J	A427
13	BZ197	5	19.7	1.0	20m	20	7.8	175J	DO41
14	RD19CM		19.7	3.0	60m	10		150J	S547
15	BZY88C20	5	19.8	400m	5.0m	50	8.5	200J	DO7
16	3KZ22	10†	19.8	3.0 §	50m		.08		A3ak§
17	HZ20-2	2	19.9	400m	2.0m	60	16mV	175J	DO35
18	HZ20-2L	2	19.9	400m	500u	100	7.0	175J	DO35
19	RD20JSB2(A)	2.5	19.9	400m	5.0m	85	8.2	175J	DO34
20	HZ20H2	2	19.9	500m	2.0m	60	16mV	175J	DO35
21	TZPD20		20		5.0m	50	9.0		DO35
22	TZPY20		20		25m	12	9.0		DO41
23	1N2048C	5	20		500m	3.0		150A	S19a
24	BZV49C20	5	20		5.0m	55	3.0	150J	M1008
25	CD4747A	5.0	20		12m	22		200	u52
26	CD5357B	5	20		65m	3.0	8.2	200J	u39b
27	MMBZ5250	5	20		6.2m	25			M500
28	NC20	5	20		5.0m	55	8.0		u47
29▼	TMPZ5250	5.0	20		6.2m	25			TO236⊠
30	DSZ3020	10	20		40m	9.0	8.0		A266
31	MA3200	5.0	20	150m	5.0m	55	14	125J	M713b
32	RD20MB		20	200m	5.0m	50		150J	M500c
33	RD20MB2	3	20	200m	5.0m	50		150	
34	BZX84C20	5	20	200m	5.0m	55	8.0	150J	M500d
35	SZ20	3	20	.25	5.0m	165	.81	150J	C1f
36	1N721A	5	20	250m	4.0m	20	8.1	175A	DO7
37	1N4114	5	20	.25	.25m	150		200J	DO7
38	1N4707	5	20	.25	.05m			200A	DO14
39	BZX59C20	5	20	250m	5.0m	85	8.5	150A	DO7
40	BZY83C20	5	20	.25	5.0m	150	10	150J	C1g
41	BZY85C20	5	20	.25 §	5.0m	55	10	150J	A171f
42	02Z20A	8	20	250m	3.5m	120	9.3	175J	DO35
43	1/4M20Z10	10†	20	250m	3.1m	33		175J	E204h
44	1N721	10	20	250m	4.0m	20	8.1	175A	DO7
45	1N721B	20	20	.25	4.0m	20			DO7
46	MC6021,A	5†	20	.30	5.0m	47		175	A2m
47	C5D5250	10	20	320m	6.2m			150S	M713a
48	BZX88C20	5	20	350m	5.0m	55	8.0	175J	A412
49	MA4200	5	20	370m	5.0m	55	14	200J	DO34
50	MTZ20		20	400m	10m	55		175J	DO34
51	TZ20		20	400m	10m	55		175J	DO35
52	1N5540D	1	20	400m§	1.0m	100		175A	DO7
53	1N5743D	1	20	400m§	5.0m	55	8.5	200A	DO35
54	Z5A20	1†	20	400m§	5.0m	65	9.0	200J	DO7
55	1N5540C	2	20	400m§	1.0m	100		175A	DO7
56	1N5743C	2	20	400m§	5.0m	55	8.5	200A	DO35
57	BZX79B20	2	20	400m§	5.0m	55	16mV	200J	DO35
58	HZS20JB2	2.5	20	400m	5.0m	85		200J	A380d
59	1N968B	5	20	400m	6.2m	25		175S	A398a
60	1N968B-F	5	20	400m	6.2m	25		200J	DO35
61	1N3525	5	20	.40	5.0m	20	9.8	200A	DO7
62	1N5540B	5	20	400m§	1.0m	100		175A	DO7
63	1N5743B	5	20	400m§	5.0m	55	8.5	200A	DO35
64	BZX79C20	5	20	400m§	5.0m	55	16mV	200J	DO35
65	BZX96C20	5	20	400m	5.0m	55	8.0	150J	DO7
66	CD968B	5	20	400m	6.2m	25	8.6	200J	u39a
67	CD5250B	5	20	400m	6.2m	25	8.6	200J	u39a
68	CH968	5	20	400m	6.2m	25	8.6	200J	u10
69	CH4114	5	20	400m	250u	150	9.0	200J	u10
70	CH5250	5	20	400m	6.2m	25	8.6	200J	u10
71	MA1200	5	20	400m	5.0m	55	14	200J	A24d
72	MZL320	5	20	400m	500u	100	8.8	175J	DO35
73	RD20JB	5	20	400m	5.0m	85		175J	DO35
74	RD20JSB(A)	5.0	20	400m	5.0m	85	8.2	175J	DO34
75	Z5B20	5†	20	400m§	5.0m	65	9.0	200J	DO7
76	1N968A	10	20	400m	6.2m	25		175S	A398a
77	1N5540A	10	20	400m§	1.0m			175A	DO7
78	1N968	20	20	400m	6.2m	25		175S	A398a
79	1N5540	20	20	400m§	1.0m			175A	DO7
80	GZA20		20	500m	5.0m	38 †	10	175J	A159
81	1N6007D	1	20	500m	5.0m	48		200J	DO35
82	Z0A20	1†	20	500m	5.0m	30 †	9.0	200J	DO29
83	1N6007C	2	20	500m	5.0m	48		200J	DO35
84	1N5250B	5	20	500m	6.2m	25	8.6	200A	A398a
85	1N5866B	5	20	500m	6.2m	57		150C	M859
86	1N6007B	5	20	500m	5.0m	48		200J	DO35
87	BZX46C20	5	20	500m	6.2m	25	11	175A	DO35
88	BZX55C20	5	20	500m	5.0m	55	8.0	175A	DO35
89	BZX55C20V	5	20	500m	5.0m	55	17mV	175J	DO35
90	BZX55C22	5	20	500m	5.0m	55	8.5	175A	DO35
91	BZX55C24	5	20	500m	5.0m	80	8.5	175A	DO35
92	BZX55C27	5	20	500m	5.0m	80	8.5	175A	DO35
93	BZX55C30	5	20	500m	5.0m	80	9.0	175A	DO35
94	BZX55C33	5	20	500m	5.0m	80	9.0	175A	DO35
95	BZX83C20	5	20	500m	5.0m	55	8.0	175A	DO35
96	BZX83C20V	5†	20	500m	5.0m	220	16mV	175J	DO35
97	BZY88C20V	5	20	500m	5.0m	50	17m	175	DO35
98	CTZ20A	5	20	500m	5.0m	200	1.0k	200	DO35
99	MA5200	5	20	500m	5.0m	45	14	125J	M990
100	MLL5250B	5.0	20	500m§	6.2m	25	8.6	200J	F140
101	MTZ621,A	5†	20	.50	5.0m	47		175A	A60e
102	MZ320,A,B	5	20	500m	5.0m	35	8.0	175J	DO35
103	RD20EB	5	20	500m	10m	55	7.8	175J	DO35
104▼	SZP5-20-5-1	5.0	20	500m	1.0m			175	u5a
105▼	SZ.5-20-5-25	5.0	20	500m	25m			175	u5a
106	Z0B20	5†	20	500m	5.0m	30 †	9.0	200J	DO29
107	ZMM5250B	5.0	20	500m§	6.2m	25	8.6	200J	F139
108	ZPD20	5	20	500m	5.0m	50	9.0	175J	DO35
109	ZPD20V	5†	20	500m	5.0m	220	18mV	175J	DO35
110	BZX97C20	6	20	500m	5.0m	55	8.0	175J	DO35
111	ZMM20	6†	20	500m	5.0m	50	9.0	175J	F135
112	BZV55C20	6.3	20	500m	5.0m	55	16	200J	F139
113	BZV60C20	6.3	20	500m	5.0m	55	16	200J	DO34
114	05Z20	8.0	20	500m	5.0m	50	9.4	175J	DO35
115	1N5250A	10	20	500m	6.2m	25	8.6	200A	A398a
116	1N5866A	10	20	500m	6.2m	57		150C	M859
117	1N6007A	10	20	500m	5.0m	62		200J	DO35
118	CTZ20	10	20	500m	5.0m	200	1.0k	200	DO35
119	EQA01-20R	10	20	500m	10m	15	.07	125J	A387
120	MLL5250A	10	20	500m§	6.2m	25	8.6	200J	F140
121▼	SZP5-20-10-1	10	20	500m	1.0m			175	u5a
122▼	SZ.5-20-10-25	10	20	500m	25m			175	u5a
123	ZMM5250A	10	20	500m§	6.2m	25	8.6	200J	F139
124	1N5250	20†	20	.50	6.2m			200A	A398a
125	1N6007	20	20	500m	5.0m	62		200J	DO35
126	MLL5250	20	20	500m§	6.2m	25		200J	F140
127▼	SZP5-20-20-1	20	20	500m	1.0m			175	u5a
128▼	SZ.5-20-20-25	20	20	500m	25m			175	u5a
129	ZMM5250	20	20	500m§	6.2m	25	8.6	200J	F139
130	1N4639	5	20	.60	6.2m	750	8.6	200A	DO14
131	1N3686B	5	20	750m	6.2m	25	7.5	175S	A1az
132	BZV41C20	5	20	750m	5.0m	55	8.0	175S	A412
133	MC6121,A	5†	20	.75	10m	47		175A	A2d
134	1N3686A	10	20	750m	6.2m	25	7.5	175S	A1az
135	1N3686	20	20	750m	6.2m	25	7.5	175S	A1az
136	HZ20PB		20	800m	20m	14		175J	DO41
137	DZB20		20	1.0	10m	30	16mV	150J	A298ap
138	GZB20		20	1.0		30	16mV		A298ap
139	GZB20C		20	1.0		30	16mV		A298ap
140	MA2200		20	1.0	20m	15	16	200J	A4155
141	RD20FB3		20	1.0	20m	14		175J	A277r
142	Z4A20	1†	20	1.0	25m	18	8.5	200J	DO29
143	BZV85C20	2	20	1.0	10m	24	16mV	200J	DO41
144	1N1778A	5	20	1.0	15m	13		175A	DO13⊠
145	1N1779A	5	20	1.0	15m	16		175A	DO13⊠
146	1N1780A	5	20	1.0	15m	18		175A	DO13⊠
147	1N3027B	5	20	1.0	12m	22		175A	A31a
148	1N4169B	5	20	1.0 §	12m	22		200S	DO29
149	1N4334B	5	20	1.0	13m	22	7.5	300S	DO7
150	1N4411B	5	20	1.0	13m	11	7.5	175A	A1cm
151	1N4668	5	20	1.0	13m	600	8.6	200A	DO15
152	1N4747A	5	20	1.0	13m	22		200A	DO41
153	1N5570B	5	20	1.0 §	12m	22		200A	A60ac
154	AP20.0A,B	5†	20	1.0 †	6.2m	30			DO35
155	APD20.0A,B	5†	20	1.0 †	13m	25			A1rx
156	BZX78C20	5	20	1.0	10m	15	16mV	200J	
157	BZX85C20	5	20	1.0 §	10m	24	9.0	150A	DO41
158	CD4747	5	20	1.0	12m	22	8.6	200J	u39a
159	CH4747	5	20	1.0	12m	22	7.5	200J	u10
160	CZ20,A,B,D	5†	20	1.0	20m	26	7.5	175	DO15
161	MZ420,A,B	5	20	1.0	10	22	8.0	175J	DO41
162	PL20Z	5	20	1.0	25m	15	8.0	150J	
163	RD20P	5.0	20	1.0	5.0m	55	8.6	150J	M1008
164▼	SZ1-20-5-1	5.0	20	1.0	1.0m			175	u5b
165▼	SZ1-20-5-25	5.0	20	1.0	25m			175	u5b
166	TZB20B	5	20	1.0 §	1.0m		9.0	175A	A1ty
167	UZ8720	5	20	1.0	12m	22	8.0	175	A380
168	VR20,A,B	5†	20	1.0	12m	22		125A	A1b
169	Z4B20	5†	20	1.0	25m	18	8.5	200J	DO29
170	Z20.0	5†	20	1.0	20m	5.3 †	7.0	150A	DO41
171	ZB20	5†	20	1.0 §	12m	22		150A	A1bc
172	ZB20B	5	20	1.0	12m	22		100C	A1bc
173	ZM4747A	5.0	20	1.0 §	12m	22		200J	F139
174	AW08-20B	5.2	20	1.0	15m	15	7.8	175J	A60au
175	AW01-20	6	20	1.0	15m	15	7.8	150J	A333
176	RD20FB	6	20	1.0	20m	14		175J	A297c
177	AW08-20A	8.1	20	1.0	15m	15	7.8	175J	A60au
178	1N1778	10	20	1.0	15m	13		175A	DO13⊠
179	1N1779	10	20	1.0	15m	16		175A	DO13⊠
180	1N3027A	10	20	1.0	12m	22		175A	A31a
181	1N4169A	10	20	1.0 §	12m	22		200S	DO29
182	1N4334A	10	20	1.0	13m	22	7.5	300S	DO7
183	1N4411A	10	20	1.0	13m	11	7.5	175A	A1cm
184	1N4747	10	20	1.0	13m	22		200A	DO41
185	1N5570A	10	20	1.0 §	12m	22		200A	A60ac
186	1S235	10	20	1.0	17m	20	8.0	150J	A56a
187	1Z20	10	20	1.0	10m	30	8.0	150J	DO15
188	EQB01-20	10	20	1.0	20m	10	.07	140J	A21b
189▼	SZ1-20-10-1	10	20	1.0	1.0m			175	u5b
190▼	SZ1-20-10-25	10	20	1.0	25m			175	u5b
191	TZB20A	10	20	1.0 §	1.0m		9.0	175A	A1ty
192	UZ8820	10	20	1.0	12m	22	8.0	175	A380
193	ZB20A	10	20	1.0	12m	22		100C	A1bc
194	ZM4747	10	20	1.0 §	12m	22		200J	F139
195	1N3027	20	20	1.0	12m	22		175A	A31a
196	1N4169	20	20	1.0 §	12m	22		200S	DO29
197	1N4334	20	20	1.0	13m	22	7.5	300S	DO7
198	1N4411	20	20	1.0	12m	11		175S	A266a
199	1N5570	20	20	1.0 §	12m			200A	A60ac
200▼	SZ1-20-20-1	20	20	1.0	1.0m			175	u5b
201▼	SZ1-20-20-25	20	20	1.0	25m			175	u5b
202	1N4839B	5	20	1.2	13m	22	8.6	175	DO29
203	1N4839A	10	20	1.2	13m	22	8.6	175	DO29
204	1N4839	20	20	1.2	13m	22	8.6	175	DO29
205	BZX61C20	5	20	1.3	10m	22	6.0	175J	DO15
206	BZX85C20V	5†	20	1.3	10m	600	15mV	175J	DO41
207	BZX87C20	5	20	1.3	10m	15	8.0	200J	A60al
208	BZY97C20	5	20	1.3	25m	15	11		A1rx

SYMBOLS AND CODES EXPLAINED IN INTERPRETER

2. VOLTAGE REFERENCE DIODES - $V_Z \geq 18$ V (Cont'd)

IN ORDER OF: (1) REF. VOLTAGE (2) PD MAX (3) TOLERANCE & (4) TYPE NUMBER

LINE No.	4 TYPE No.	3 TOL ± (%)	1 NOM. REF. VOLT. (V)	2 PD @ 25°C MAX (W)	TEST CUR. Izt (A)	DYN. IMP. MAX (Ω)	TEMP. COEFF Tc MAX	TEMP MAX (°C)	DWG. NO.
1	ZD20	5	20	1.3	25	15	7.0	150J	DO13
2	ZY20	5	20	1.3	25m	15	9.0	150J	A1bg
3	BZD10C20	6	20	1.3	25m	15	11		DO13
4	BZW22C20	6	20	1.3	25m	12	11		DO41
5	ZPY20	12	20	1.3	25m	12	11	200J	DO41
6	1N5932D	1	20	1.5	18m	14		200J	DO41
7	1N5932C	2	20	1.5	18m	14		200J	DO41
8	1N3763	5	20	1.5	10m	35	.20	150A	A1ss
9	1N3796B	5	20	1.5	19m	15	8.6	175S	C14Ø
10	1N3950	5	20	1.5	19m	15	7.9	175S	C12
11	1N4472	5	20	1.5	13m	12		175A	A60y
12	1N5932B	5	20	1.5	18m	14		200J	DO41
13	1S4020,A	5†	20	1.5	10m	8.0	8.5	150A	DO1
14	BZY95C20	5	20	1.5	20m	12	7.0	175J	DO1
15	BZY97C20V	5†	20	1.5	25m	15	17mV	150J	A1bg
16	MC6321,A	5†	20	1.5	51m	42			A1q
17▼	SZ1.5-20-5-1								
		5.0	20	1.5	1.0m			175	u5b
18	1N3796A	10	20	1.5	19m	15	8.6	175S	C14Ø
19	1N5932A	10	20	1.5	18m	14		200J	DO41
20▼	SZ1.5-20-10-1								
		10	20	1.5	1.0m			175	u5b
21	1N3796	20	20	1.5	19m	15	8.6	175S	C14Ø
22	1N5932	20	20	1.5	18m	14		200J	DO41
23▼	SZ1.5-20-20-1								
		20	20	1.5	1.0m			175	u5b
24	2EZ20D5	5	20	2.0	25m	11		200J	A1ay
25	2VR20,A,B	5†	20	2.0	25m	20			A3e
26	BZV47C20	5	20	2.0	25m	15	7.5	175J	A344r
27	LMZ20A	5	20	2.0	25m	11	8.6	150A	DO41
28	ZBC20	5†	20	2.0 §	25m	9.0		150A	A1bc
29	ZBC20B	5	20	2.0	25	9.0			A1ty
30	2EZ20D10	10	20	2.0	25m	11		200J	A1ay
31	LMZ20	10	20	2.0	25m	11	8.6	150A	DO41
32	ZBC20A	10	20	2.0	25	9.0			A1ty
33	2EZ20D	20	20	2.0	25m	11		200J	A1ay
34	BZV15C20	5	20	2.2	500m	1.5	7.5	150J	M754Ø
35	1N5030A	5	20	2.5	31m	9.0	7.5	150	A1gn
36	BZX70C20	5	20	2.5	20m	12	14mV	150J	A171b
37	Z2B20	5†	20	2.5	20m	15	8.5	200J	DO1
38	AU01-20	6	20	2.5	40m	15	8.6	165J	A333b
39	1N5030	10	20	2.5	31m	9.0	7.5	150	A1gn
40	3EZ20D1	1.0	20	3.0	37m	7.0		150J	A1ay
41	3EZ20D2	2.0	20	3.0	37m			150J	A1ay
42	3EZ20D3	3.0	20	3.0	37m	7.0		150J	A1ay
43	3EZ20D4	4.0	20	3.0	37	7.0		150J	A1ay
44	1N4884	5	20	3.0	40m	9.0		175A	A60n
45	3EZ20D5	5	20	3.0	37m	7.0		200J	A1ay
46	3VR20,A,B	5†	20	3.0	37m	11			A3al
47	BZV16C20	5	20	3.0	25m	22	7.5	175	DO3
48	MZ720	5	20	3.0	40m	9.0	8.0	175A	A146j
49	UDZ720	5	20	3.0	40m	9.0		175A	A356a
50	UZ720	5	20	3.0	40m	9.0	8.0	175A	A380
51	ZCC20	5†	20	3.0 §	40m	9.0		150A	A1ey
52	ZCC20B	5	20	3.0	40m	9.0			A1ey
53	1N4881	10	20	3.0	40m	9.0		175A	A60n
54	3EZ20D10	10	20	3.0	37m	7.0		200J	A1ay
55	MZ820#B	10	20	3.0	40m	9.0	8.0	175A	A146j
56	UZ820	10	20	3.0	40m	9.0	8.0	175A	A380
57	ZCC20A	10	20	3.0	40m	9.0			A1ey
58	3EZ20D	20	20	3.0	37m	7.0		200J	A1ay
59	MZ920	20	20	3.0	40m	9.0	8.0	175A	A146j
60	UZ920	20	20	3.0	40m	9.0	8.0	175A	A380
61▼	BZT03/D20	10	20	3.2	25m	15	11	175J	A94g
62	3T20,A,B	5†	20	3.5	50m	13			DO4
63▼	SZ3-20-5-1	5.0	20	5.0	1.0m			175	u5c
64▼	SZ3-20-5-25								
		5.0	20	5.0	25m			175	u5c
65▼	SZ3-20-10-1								
		10	20	5.0	1.0m			175	u5c
66▼	SZ3-20-10-25								
		10	20	5.0	25m			175	u5c
67▼	SZ3-20-20-1								
		20	20	5.0	1.0m			175	u5c
68▼	SZ3-20-20-25								
		20	20	5.0	25m			175	u5c
69	RD20EL4		20.2	500m	1.0m	28		175J	A277b
70	RD20EN4		20.2	500m	5.0m	28		175J	A277G
71	HZ20EC	2.5	20.2	500m	10m	28		175J	DO35
72	EQA02-20AB	9	20.2	500m	5.0m	40	.07	175J	A1ac
73	1N2767	5	20.4		7.5m	60	.50	175A	A1jg
74	1N2767A	5	20.4		7.5m	60	.25	175A	A1jg
75	RD20MB3	3	20.5	200m	5.0m	50		150	
76	HZ20-3	2	20.6	400m	2.0m	60	16mV	175J	DO35
77	HZ20-3L	2	20.6	400m	500u	100	7.0	175J	DO35
78	RD20JSB3(A)								
		2.5	20.6	400m	5.0m	85	8.2	175J	DO34
79	HZS20JB3	2.6	20.6	400m	5.0m	85		200J	A380d
80	RD22EB1		20.6	500m	5.0m	30		175J	A277b
81	RD22EL1		20.6	500m	1.0m	30		175J	A277b
82	HZ20H3	2	20.6	500m	2.0m	60	16mV	175J	DO35
83	HZ22EB1	2.4	20.6	500m	10m	30		175J	DO35
84	RD22FB1		20.9	1.0	10m	14		175J	A277r
85	BZ210	5	21	1.0	10m	22	8.1	175J	A60t
86	1N4061	5	21	1.5	10m	35	.50	100	A1ss
87	1N4061A	5	21	1.5	10m	35	.20	100	A1ss
88	RD22EB2		21.1	500m	5.0m	30		175J	A277b
89	RD22EL2		21.1	500m	1.0m	30		175J	A277b
90	HZ22EB2	2.4	21.2	500m	10m	30		175J	DO35
91	RD20EC	5	21.2	500m	10m	55	7.8	175J	DO35
92	EQA01-21R	9	21.2	500m	10m	20	.08	125J	A387
93	HZ20PC		21.2	800m	20m	14		175J	DO41
94	RD20FC	5	21.2	1.0	20m	14		175J	A297c
95	EQB01-21	10	21.2	1.0	10m	15	.08	140J	A21b
96	HZS22JB1	2.4	21.3	400m	5.0m	100		200J	A380d
97	RD22JSB1(A)								
		2.5	21.3	400m	5.0m	100	8.4	175J	DO34
98	RD22EL		21.3	500m	1.0m	30		175J	A277b
99	RD24AL		21.4	250m	10m	100		175J	A277b
100	HZ22-1	2	21.4	400m	2.0m	65	18mV	175J	DO35
101	HZ22-1L	2	21.4	400m	500u	100	7.0	175J	DO35
102	HZ22H1	2	21.4	500m	2.0m	65	18mV	175J	DO35
103	EQA02-21AB	7	21.4	500m	5.0m	40	.08	175J	A1ac
104	RD24BL		21.4	1.0	20m	21		150J	A427
105	RD24CL		21.4	3.0	60m	12		150J	S547
106	RD22MB1	3	21.5	200m	5.0m	55		150	
107	RD22EB3		21.6	500m	5.0m	30		175J	A277b
108	RD22EL3		21.6	500m	1.0m	30		175J	A277b
109	HZ22EB3	2.5	21.6	500m	10m	30		175J	DO35
110	RD22FB2		21.6	1.0	10m	14		175J	A277r
111	3KZ24	10†	21.6	3.0 §	50m		.09		A3ak§
112	BZY88C22	5	21.8	400m	5.0m	60	8.6	200J	DO7
113	TZPD22		22		5.0m	55	9.0		DO35
114	TZPY22		22		25m	13	9.0		DO41
115	1N2049A	5	22		150m	8.0		150A	S19a
116	BZV49C22	5	22		5.0m	55	3.0	150J	M1008
117	CD4748A	5.0	22		11m	23		200	u52
118	CD5358B	5	22		50m	3.5	8.3	200J	u39b
119	MMBZ5251	5	22		5.6m	29			M500
120	NC22	5	22		5.0m	55	8.0		u47
121▼	TMPZ5251	5.0	22		5.6m	29			TO236Ø
122	DSZ3022	10	22		30m	10	8.0		A266
123	ZTK22	10	22		5.0m	25	200m	150J	DO35
124	1N1990B	1	22	150m	1.0m	100	9.4	150	C1
125	1N1990A	5	22	150m	1.0m	100	9.4	150	C1
126	MA3220	5.0	22	150m	5.0m	55	16	125J	M713b
127	1N1990	10	22	150m	1.0m	100	9.4	150	C1
128	RD22MB		22	200m	5.0m	55		150J	M500c
129	1N1936B	1	22	200m	1.0m	100	9.4	150A	A82e
130	RD22MB2	3	22	200m	5.0m	55		150	
131	HZT22	4.5	22.0	200m§	5.0m	25	1.0	175J	DO35
132	1N1936A	5	22	200m	1.0m	100	9.4	150A	A82e
133	BZX84C22	5	22	200m	5.0m	55	9.0	150J	M500d
134	1N1936	10	22	200m	1.0m	100	9.4	150A	A82e
135	1N722A	5	22	250m	4.0m	24	8.3	175A	DO7
136	1N4115	5	22	.25	.25m	150		200J	DO7
137	1N4708	5	22	.25	.05m			200A	DO14
138	BZX59C22	5	22	250m	5.0m	100	9.0	150A	DO7
139	BZY83C22	5	22	.25	5.0m	170	10	150J	C1g
140	BZY85C22	5	22	.25 §	5.0m	55	10	150J	A171f
141	02Z22A	6	22	250m	2.5m	160	9.4	175J	DO35
142	1/4M22Z10	10†	22	250m	2.8m	40		175J	E204h
143	1N722	10	22	250m	4.0m	24	8.3	175A	DO7
144	BZY83D22	10	22	.25	5.0m	200	10	150J	C1g
145	1N722B	20	22	.25	4.0m	24			DO7
146	BZ969	5	22	300m	5.6m	29	8.7	175S	M765
147	BZ969F	5	22	300m	5.6m	29	8.7	175S	TO86
148	BZ969T	5	22	300m	5.6m	29	8.7	175S	TO18
149	MC6022,A	5†	22	.30	5.0m	53		175	A2m
150	C5D5251	10	22	320m	5.6m			150S	M713a
151	BZX88C22	5	22	350m	5.0m	55	8.0	175J	A412
152	MA4220	5	22	370m	5.0m	55	16	200J	DO34
153	MTZ22		22	400m	5.0m	60		175J	DO34
154	TZ22		22	400m	5.0m	60		175J	DO35
155	1N1963B	1	22	400m	1.0m	100	9.4	150	DO7
156	1N5541D	1	22	400m§	1.0m	100		175A	DO7
157	1N5744D	1	22	400m§	5.0m	55	8.6	200A	DO35
158	Z5A22	1†	22	400m§	5.0m	70	9.0	200J	DO7
159	1N5541C	2	22	400m§	1.0m	100		175A	DO7
160	1N5744C	2	22	400m§	5.0m	55	8.6	200A	DO35
161	BZX79B22	2	22	400m§	5.0m	55	18mV	200J	DO35
162	HZS22JB2	2.5	22.0	400m	5.0m	100		200J	A380d
163	1N668	5	22	.40	5.0m	30	8.0	200S	A31b
164	1N969B	5	22	400m	5.6m	29		175S	A398a
165	1N1963A	5	22	400m	1.0m	100	9.4	150	DO7
166	1N3526	5	22	.40	5.0m	35	10	200A	DO7
167	1N5541B	5	22	400m§	1.0m	100		175A	DO7
168	1N5744B	5	22	400m§	5.0m	55	8.6	200A	DO35
169	1S2220A	5	22	400m	5.0m	65	8.0	150A	A1
170	BZX79C22	5	22	400m§	5.0m	70	18mV	200J	DO35
171	BZX96C22	5	22	400m	5.0m	55	8.0	150J	DO7
172	CD969B	5	22	400m	5.6m	29	8.7	200J	u39a
173	CD5251B	5	22	400m	5.6m	29	8.7	200J	u39a
174	CH969	5	22	400m	5.6m	29	8.7	200J	u10
175	CH4115	5	22	400m	250u	150	9.0	200J	u10
176	CH5251	5	22	400m	5.6m	29	8.7	200J	u10
177	MA1220	5	22	400m	5.0m	55	16	200J	A24d
178	MZL322	5	22	400m	500u	100	9.0	175J	DO35
179	RD22JB	5	22	400m	5.0m	100		175J	DO35
180	RD22JSB(A)	5.0	22.0	400m	5.0m	100		175J	DO34
181	Z5B22	5†	22	400m§	5.0m	70	9.0	200J	DO7
182	1N969A	10	22	400m	5.6m	29		175S	A398a
183	1N1963	10	22	400m	1.0m	100	9.4	150	DO7
184	1N5541A	10	22	400m§	1.0m			175A	DO7
185	1S2220	10	22	400m	5.0m	65	8.0	150A	A1
186	1N969	20	22	400m	5.6m	29		175S	A398a
187	1N5541	20	22	400m§	1.0m			175A	DO7
188	GZA22		22	500m	5.0m	45 †	10	175J	A159
189	RD22EB4		22.0	500m	5.0m	30		175J	A277b
190	RD22EL4		22.0	500m	1.0m	30		175J	A277b
191	1N6008D	1	22	500m	5.0m	55		200J	DO35
192	Z0A22	1†	22	500m	5.0m	35 †	9.0	200J	DO29
193	1N6008C	2	22	500m	5.0m	55		200J	DO35
194	1N5251B	5	22	500m	5.6m	29	8.7	200A	A398a
195	1N5867B	5	22	500m	5.6m	68		150C	M859
196	1N6008B	5	22	500m	5.0m	55		200J	DO35
197	BZX46C22	5	22	500m	5.6m	29	11	175A	DO35
198	BZX55C22V	5	22	500m	5.0m	55	19mV	175J	DO35
199	BZX83C22	5	22	500m	5.0m	58	8.5	175A	DO35
200	BZX83C22V	5†	22	500m	5.0m	220	17mV	175J	DO35
201	BZX97C22	5	22	500m	5.0m	55	8.5	175J	DO35
202	BZY88C22V	5	22	500m	5.0m	60	19m	175	DO35
203	CTZ22A	5	22	500m	5.0m	350	1.2k	200	DO35
204	MA5220	5	22	500m	5.0m	55	16	125J	M990
205	MLL5251B	5.0	22	500m§	5.6m	29	8.7	200J	F140
206	MTZ622,A	5†	22	.50	5.0m	53		175A	A60e
207	MZ322,A,B	5	22	500m	5.0m	40	8.3	175J	DO35
208	RD22EB	5	22	500m	5.0m	60	7.8	175J	DO35
209▼	SZP5-22-5-1								
		5.0	22	500m	1.0m			175	u5a

SYMBOLS AND CODES EXPLAINED IN INTERPRETER

2. VOLTAGE REFERENCE DIODES - $V_Z \geq 18$ V (Cont'd)

IN ORDER OF: (1) REF. VOLTAGE (2) PD MAX (3) TOLERANCE & (4) TYPE NUMBER

LINE No.	4 TYPE No.	3 TOL ± (%)	1 NOM. REF. VOLT. (V)	2 PD @ 25°C MAX (W)	TEST CUR. Izt (A)	DYN. IMP. MAX (Ω)	TEMP. COEFF Tc MAX	TEMP MAX (°C)	DWG. NO.
1▼	SZ.5-22-5-25								
		5.0	22	500m	25m			175	u5a
2	Z0B22	5†	22	500m	5.0m	35 †	9.0	200J	DO29
3	ZMM5251B	5.0	22	500m§	5.6m	29	8.7	200J	F139
4	ZPD22	5	22	500m	5.0m	55	9.0	175J	DO35
5	BZV55C22	5.7	22	500m	5.0m	55	18	200J	F139
6	BZV60C22	5.7	22	500m	5.0m	55	18	200J	DO34
7	05Z22	6.0	22	500m	5.0m	60	9.6	175J	DO35
8	ZMM22	6†	22	500m	5.0m	55	9.0	175J	F135
9	1N3406	10	22	500m	3.0m	75	5.6	200S	P5
10	1N3419	10	22	.50	1.0m	220	7.1	200A	P5
11	1N5251A	10	22	500m	5.6m	29	8.7	200A	A398a
12	1N5867A	10	22	500m	5.6m	68		150C	M859
13	1N6008A	10	22	500m	5.0m	70		200J	DO35
14	CTZ22	10	22	500m	5.0m	350	1.2k	200	DO35
15	MLL5251A	10	22	500m§	5.6m	29	8.7	200J	F140
16▼	SZP5-22-10-1								
		10	22	500m	1.0m			175	u5a
17▼	SZ.5-22-10-25								
		10	22	500m	25m			175	u5a
18	ZMM5251A	10	22	500m§	5.6m	29	8.7	200J	F139
19	1N5251	20†	22	.50	5.6m			200A	A398a
20	1N6008	20	22	500m	5.0m	70		200J	DO35
21	MLL5251	20	22	500m§	5.6m	29		200J	F140
22▼	SZP5-22-20-1								
		20	22	500m	1.0m			175	u5a
23▼	SZ.5-22-20-25								
		20	22	500m	25m			175	u5a
24	ZMM5251	20	22	500m§	5.6m	29	8.7	200J	F139
25	ZPD22V	5†	22	550m	5.0m	220	19mV	175J	DO35
26	1N4640	5	22	.60	5.6m	750	8.7	200A	DO14
27	1N1516A	5	22	750m	6.0m	40	9.0	200S	DO12
28	1N2040A	5	22	.75	5.0m	300	9.0	150J	DO12
29	1N3687B	5	22	750m	5.6m	29	8.0	175S	A1az
30	BZV41C22	5	22	750m	5.0m	55	8.0	175S	A412
31	MC6122,A	5†	22	.75	10m	53		175A	A2d
32	1N1516	10	22	750m	6.0m	40	9.0	200S	DO12
33	1N3687A	10	22	750m	5.6m	29	8.0	175S	A1az
34	1N3687	20	22	750m	5.6m	29	8.0	175S	A1az
35	HZ22PB		22	800m	10m	14		175J	DO41
36	DZB22		22	1.0	10m	30	18mV	150J	A298ap
37	GZB22		22	1.0		30	18mV		A298ap
38	GZB22C		22	1.0		30	18mV		A298ap
39	MA2220		22	1.0	10m	20	18	200J	A277r
40	1N1880B	1	22	1.0	8.0m	10 †	6.4	175A	DO13
41	Z4A22	1†	22	1.0	10m	27	9.0	200J	DO29
42	1N1429	5	22	1.0	10m	23 †	8.0	200A	A154
43	1N1527A	5	22	1.0	9.0m	32	9.0	200S	DO3
44	1N1880A	5	22	1.0	8.0m	24	6.4	200C	A41e
45	1N3028B	5	22	1.0	11m	23		175A	A31a
46	1N4170B	5	22	1.0 §	11m	23		200S	DO29
47	1N4335B	5	22	1.0	12m	23	8.0	300S	DO7
48	1N4412B	5	22	1.0	12m	12	8.0	175A	A1cm
49	1N4669	5	22	1.0	12m	600	8.7	200A	DO15
50	1N4748A	5	22	1.0	12m	23		200A	DO41
51	1N5571B	5	22	1.0 §	11m	23		200A	A60ac
52	AP22.0A,B	5†	22	1.0 †	5.6m	50			DO35
53	APD22.0A,B	5†	22.0	1.0 †	12m	40			A1rx
54	BZ220	5	22.0	1.0	10m	22	8.1	175J	DO41
55	BZV85C22	5	22	1.0	10m	25	19mV	200J	DO41
56	BZX78C22	5	22	1.0	10m	20	18mV	200J	
57	BZX85C22	5	22	1.0 §	10m	25	9.5	150A	DO41
58	CD4748	5	22	1.0	11m	23	8.7	200J	u39a
59	CH4748	5	22	1.0	11m	23	8.0	200J	u10
60	CZ22,A,B,D	5†	22	1.0	20m	27	8.0	175	DO15
61	MZ422,A,B	5	22	1.0	10	23	8.1	175J	DO41
62	PL22Z	5	22	1.0	25m	15	8.0	150J	
63	RD22FB	5	22	1.0	10m	14		175J	A297c
64	RD22P	5.0	22	1.0	5.0m	55	8.7	150J	M1008
65▼	SZ1-22-5-1	5.0	22	1.0	1.0m			175	u5b
66▼	SZ1-22-5-25								
		5.0	22	1.0	25m			175	u5b
67	TZB22B	5	22	1.0 §	1.0m		9.2	175A	A1ty
68	UZ8722	5	22	1.0	11m	23	8.0	175	A380
69	VR22,A,B	5†	22	1.0	11m	23		125A	A1b
70	Z4B22	5†	22	1.0	10m	27	9.0	200J	DO29
71	Z22.0	5†	22	1.0	10m	6.0 †	8.0	150A	DO41
72	ZB22	5†	22	1.0 §	11m	23		150A	A1bc
73	ZB22B	5	22	1.0	11m	23		100C	A1bc
74	ZM4748A	5.0	22	1.0 §	11m	23		200J	F139
75	AW08-22B	5.2	22	1.0	15m	15	8.0	175J	A60au
76	AW01-22	6	22	1.0	15m	15	8.0	150J	A333
77	AW08-22A	8.3	22	1.0	15m	15	8.0	175J	A60au
78	1N1527	10	22	1.0	9.0m	32	9.0	200S	DO3
79	1N1880	10	22	1.0	8.0m	24	6.4	200C	A41e
80	1N3028A	10	22	1.0	11m	23		175A	A31a
81	1N4170A	10	22	1.0 §	11m	23		200S	DO29
82	1N4335A	10	22	1.0	12m	23	8.0	300S	DO7
83	1N4412A	10	22	1.0	12m	12	8.0	175A	A1cm
84	1N4748	10	22	1.0	12m	23		200A	DO41
85	1N5571A	10	22	1.0 §	11m	23		200A	A60ac
86	1S236	10	22	1.0	72m	30	8.2	150J	A56a
87	1Z22	10	22	1.0	10m	30	8.2	150J	DO15
88	KS522A	10	22	1.0	5.0m	25 †	10	100C	A378
89▼	SZ1-22-10-1								
		10	22	1.0	1.0m			175	u5b
90▼	SZ1-22-10-25								
		10	22	1.0	25m			175	u5b
91	TZB22A	10	22	1.0 §	1.0m		9.2	175A	A1ty
92	UZ8822	10	22	1.0	11m	23	8.0	175	A380
93	ZB22A	10	22	1.0	11m	23		100C	A1bc
94	ZM4748	10	22	1.0 §	11m	23		200J	F139
95	1N3028	20	22	1.0	11m	23		175A	A31a
96	1N4170	20	22	1.0 §	11m	23		200S	DO29
97	1N4335	20	22	1.0	12m	23	8.0	300S	DO7
98	1N4412	20	22	1.0	11m	12		175S	A266a
99	1N5571	20	22	1.0 §	11m			200A	A60ac
100▼	SZ1-22-20-1								
		20	22	1.0	1.0m			175	u5b
101▼	SZ1-22-20-25								
		20	22	1.0	25m			175	u5b
102	1N4840B	5	22	1.2	11m	23	8.7	175	DO29
103	1N4840A	10	22	1.2	11m	23	8.7	175	DO29
104	1N4840	20	22	1.2	11m	23	8.7	175	DO29
105	BZD10C22	5	22	1.3	25m	15	11		DO13
106	BZW22C22	5	22	1.3	25m	13	11		DO41
107	BZX61C22	5	22	1.3	10m	23	6.0	175J	DO15
108	BZX85C22V	5†	22	1.3	10m	600	17mV	175J	DO41
109	BZX87C22	5	22	1.3	10m	20	8.1	200J	A60al
110	BZY97C22	5	22	1.3	25m	15	11		A1rx
111	ZD22	5	22	1.3	25	15	7.0	150J	DO13
112	ZY22	5	22	1.3	25m	15	9.0	150J	A1bg
113	ZMY22	6	22	1.3	25	13	9	200J	F149
114	ZPY22	11	22	1.3	25m	13	11	200J	DO41
115	1N5933D	1	22	1.5	17m	17		200J	DO41
116	1N5933C	2	22	1.5	17m	17		200J	DO41
117	1N3797B	5	22	1.5	17m	16	8.7	175S	C14Ø
118	1N4473	5	22	1.5	12m	14		175A	A60y
119	1N5933B	5	22	1.5	17m	17		200J	DO41
120	1S4022,A	5†	22	1.5	10m	10	8.5	150A	DO1
121	BZY95C22	5	22	1.5	20m	13	7.2	175J	DO1
122	BZY97C22V	5†	22	1.5	25m	15	18mV	150J	A1bg
123	MC6322,A	5†	22	1.5	50m	48			A1q
124▼	SZ1.5-22-5-1								
		5.0	22	1.5	1.0m			175	u5b
125	1N3797A	10	22	1.5	17m	16	8.7	175S	C14Ø
126	1N5933A	10	22	1.5	17m	17		200J	DO41
127▼	SZ1.5-22-10-1								
		10	22	1.5	1.0m			175	u5b
128	1N3797	20	22	1.5	17m	16	8.7	175S	C14Ø
129	1N5933	20	22	1.5	17m	17		200J	DO41
130▼	SZ1.5-22-20-1								
		20	22	1.5	1.0m			175	u5b
131	2EZ22D5	5	22	2.0	22m	12		200J	A1ay
132	2VR22,A,B	5†	22	2.0	23m	20			A3e
133	BZV47C22	5	22	2.0	25m	15	8.0	175J	A344r
134	LMZ22A	5	22	2.0	22m	11	8.7	150A	DO41
135	ZBC22	5†	22	2.0 §	23m	10		150A	A1bc
136	ZBC22B	5	22	2.0	23	10			A1ty
137	2EZ22D10	10	22	2.0	22m	12		200J	A1ay
138	LMZ22	10	22	2.0	22m	11	8.7	150A	DO41
139	ZBC22A	10	22	2.0	23	10			A1ty
140	2EZ22D	20	22	2.0	22m	12		200J	A1ay
141	BZV15C22	5	22	2.2	500m	1.8	7.5	150J	M754Ø
142	1N5031A	5	22	2.5	28m	9.7	8.0	150	A1gn
143	BZX70C22	5	22	2.5	20m	13	16mV	150J	A171b
144	Z2B22	5†	22	2.5	20m	16	9.0	200J	DO1
145	1N5031	10	22	2.5	28m	9.7	8.0	150	A1gn
146	3EZ22D1	1.0	22	3.0	34m	8.0		150J	A1ay
147	3EZ22D2	2.0	22	3.0	34m	8.0		150J	A1ay
148	3EZ22D3	3.0	22	3.0	34m	8.0		150J	A1ay
149	3EZ22D4	4.0	22	3.0	34	8.0		150J	A1ay
150	1N5074	5	22	3.0	30m	10		175A	A146u
151	3EZ22D5	5	22	3.0	34m	8.0		200J	A1ay
152	3VR22,A,B	5†	22	3.0	34m	12			A3al
153	BZV16C22	5	22	3.0	23m	23	8.0	175	DO3
154	MZ722	5	22	3.0	30m	10	8.0	175A	A146j
155	UZ722	5	22	3.0	30m	10	8.0	175A	A380
156	ZCC22	5†	22	3.0 §	30m	10		150A	A1ey
157	ZCC22B	5	22	3.0	30m	10			A1ey
158	3EZ22D10	10	22	3.0	34m	8.0		200J	A1ay
159	MZ822	10	22	3.0	30m	10	8.0	175A	A146j
160	UZ822	10	22	3.0	30m	10	8.0	175A	A380
161	ZCC22A	10	22	3.0	30m	10			A1ey
162	3EZ22D	20	22	3.0	34m	8.0		200J	A1ay
163	MZ922	20	22	3.0	30m	10	8.0	175A	A146j
164	UZ922	20	22	3.0	30m	10	8.0	175A	A380
165▼	BZT03/D22	10	22	3.2	25m	15	11	175J	A94q
166	1N1597A	5	22	3.5	30m	14	9.0	200S	DO4
167	1N1597	10	22	3.5	30m	14	9.0	200S	DO4
168▼	SZ3-22-5-1	5.0	22	5.0	1.0m			175	u5c
169▼	SZ3-22-5-25								
		5.0	22	5.0	25m			175	u5c
170▼	SZ3-22-10-1								
		10	22	5.0	1.0m			175	u5c
171▼	SZ3-22-10-25								
		10	22	5.0	25m			175	u5c
172▼	SZ3-22-20-1								
		20	22	5.0	1.0m			175	u5c
173▼	SZ3-22-20-25								
		20	22	5.0	25m			175	u5c
174	HZ22-2	2	22.1	400m	2.0m	65	18mV	175J	DO35
175	HZ22-2L	2	22.1	400m	500u	100	7.1	175J	DO35
176	RD22JSB2(A)								
		2.5	22.1	400m	5.0m	100	8.4	175J	DO34
177	HZ22H2	2	22.1	500m	2.0m	65	18mV	175J	DO35
178	HZ22EB4	2.5	22.1	500m	5.0m	30		175J	DO35
179	AU01-22	13	22.3	2.5	40m	15	8.7	165J	A333b
180	EQA02-22AB	7	22.4	500m	5.0m	40	.08	175J	A1ac
181	EQA01-22R	9	22.4	500m	5.0m	30	.08	125J	A387
182	EQB01-22	10	22.4	1.0	10m	20	.08	140J	A21b
183	RD22MB3	3	22.5	200m	5.0m	55		150	
184	RD22JSB3(A)								
		2.5	22.6	400m	5.0m	100	8.4	175J	DO34
185	RD24EB1		22.6	500m	5.0m	35		175J	A277b
186	RD24EL1		22.6	500m	1.0m	35		175J	A277b
187	HZ24EB1	2.4	22.6	500m	5.0m	35		175J	DO35
188	HZS22JB3	2.6	22.7	400m	5.0m	100		200J	A380d
189	HZ22-3	2	22.8	400m	2.0m	65	18mV	175J	DO35
190	HZ22-3L	2	22.8	400m	500u	100	7.2	175J	DO35
191	HZ22H3	2	22.8	500m	2.0m	65	18mV	175J	DO35
192	ZS23	5†	22.8	750m	5.0m	160	500m	150A	C3h
193	RD24FB1		23.0	1.0	10m	16		175J	A277r
194	BZ230	5	23	1.0	10m	24	8.3	175J	A60t
195	1N4062	5	23	1.5	10m	40	.50	100	A1ss
196	1N4062A	5	23	1.5	10m	40	.20	100	A1ss
197	RD24EB2		23.1	500m	5.0m	35		175J	A277b
198	RD24EL2		23.1	500m	1.0m	35		175J	A277b
199	HZ24EB2	2.4	23.2	500m	5.0m	35		175J	DO35

SYMBOLS AND CODES EXPLAINED IN INTERPRETER

2. VOLTAGE REFERENCE DIODES - $V_Z \geq 18$ V (Cont'd)

IN ORDER OF: (1) REF. VOLTAGE (2) PD MAX (3) TOLERANCE & (4) TYPE NUMBER

LINE No.	4 TYPE No.	3 TOL ± (%)	1 NOM. REF. VOLT. (V)	2 PD @ 25°C MAX (W)	TEST CUR. Izt (A)	DYN. IMP. MAX (Ω)	TEMP. COEFF Tc MAX	TEMP MAX (°C)	DWG. NO.
1	RD22EC	5	23.2	500m	5.0m	60	7.9	175J	DO35
2	HZ22PC		23.2	800m	10m	14		175J	DO41
3	RD22FC	5	23.2	1.0	10m	14		175J	A297c
4	RD24AM		23.4	250m	10m	100		175J	A277b
5	HZ24-1	2	23.4	400m	2.0m	70	20mV	175J	DO35
6	HZ24-1L	2	23.4	400m	500u	120	7.2	175J	DO35
7	HZS24JB1	2.5	23.4	400m	5.0m	120		200J	A380d
8	RD24JSB1(A)	2.5	23.4	400m	5.0m	120	8.7	175J	DO34
9	RD24EL		23.4	500m	1.0m	35		175J	A277b
10	HZ24H1	2	23.4	500m	2.0m	70	20mV	175J	DO35
11	RD24BM		23.4	1.0	20m	21		150J	A427
12	RD24CM		23.4	3.0	60m	12		150J	S547
13	1N1318A	5	23.5	150m	200u			150A	C1
14	1N1318	10	23.5	150m	200u			150A	C1
15	RD24MB1	3	23.5	200m	5.0m	60		150	
16	RD24A	10	23.5	.20	5.0m	150	9.0	150S	A1dw
17	RD24AK		23.5	250m	10m	100		175J	A277b
18	1N769A	5	23.5	250m	5.0m	150	9.0	150	DO7
19	1N769	10	23.5	250m	5.0m	150		150A	A398
20	1N2040	10	23.5	750m	5.0m	300		150A	DO12
21	RD24BK		23.5	1.0	20m	21		150	A427
22	RD24CK		23.5	3.0	60m	12		150J	S547
23	EQA01-24R	10	23.6	500m	5.0m	30	.08	125J	A387
24	EQB01-24	10	23.6	1.0	10m	20	.08	140J	A21b
25	RD24EB3		23.7	500m	5.0m	35		175J	A277b
26	RD24EL3		23.7	500m	1.0m	35		175J	A277b
27	HZ24EB3	2.5	23.7	500m	5.0m	35		175J	DO35
28	RD24FB2		23.7	1.0	10m	16		175J	A277r
29	BZY88C24	5	23.8	400m	5.0m	75	8.7	200J	DO7
$V_Z \geq 24$ V									
33	TZPD24		24		5.0m	80	9.0		DO35
34	TZPY24		24		25m	14	9.0		DO41
35	1N2049B	5	24		150m	8.0		150A	S19a
36	BZV49C24	5	24		5.0m	80	4.0	150J	M1008
37	CD4749A	5.0	24		10m	25		200	u52
38	CD5359B	5	24		50m	3.5	8.4	200J	u39b
39	MMBZ5252	5	24		5.2m	33			M500
40	NC24	5	24		5.0m	70	8.0		u47
41▼	TMPZ5252	5.0	24		5.2m	33			TO236Ø
42	DSZ3024	10	24		30m	10	8.0		A266
43	MA3240	5.0	24	150m	5.0m	70	18	125J	M713b
44	RD24MB		24	200m	5.0m	60		150J	M500c
45	1N723A	5	24	250m	4.0m	28	8.5	175A	DO7
46	1N4116	5	24	.25	.25m	150		200J	DO7
47	1N4709	5	24	.25	.05m			200A	DO14
48	02Z24A	5	24	250m	2.5	200	9.2	175	DO35
49	BZX59C24	5	24	250m	5.0m	150	9.0	150A	DO7
50	BZY85C24V5	5	24	.25 §	5.0m	80	10	150J	A171f
51	1/4M24Z10	10†	24	250m	2.6m	46		175J	E204h
52	1N723	10	24	250m	4.0m	28	8.5	175A	DO7
53	1N723B	20	24	.25	4.0m	28			DO7
54	MC6023,A	5†	24	.30	5.0m	59		175	A2m
55	C5D5252	10	24	320m	5.2m			150S	M713a
56	BZX88C24	5	24	350m	5.0m	70	8.0	175J	A412
57	MA4240	5	24	370m	5.0m	70	18	200J	DO34
58	MTZ24		24	400m	5.0m	75		175J	DO34
59	TZ24		24	400m	5.0m	75		175J	DO35
60	1N5542D	1	24	400m§	1.0m	100		175A	DO7
61	1N5745D	1	24	400m§	5.0m	70	8.7	200A	DO35
62	Z5A24	1†	24	400m§	5.0m	80	10	200J	DO7
63	1N5542C	2	24	400m§	1.0m	100		175A	DO7
64	1N5745C	2	24	400m§	5.0m	70	8.7	200A	DO35
65	BZX79B24	2	24	400m§	5.0m	70	20mV	200J	DO35
66	1N970B	5	24	400m	5.2m	33		175S	A398a
67	1N3527	5	24	.40	5.0m	38	10	200A	DO7
68	1N5542B	5	24	400m§	1.0m	100		175A	DO7
69	1N5745B	5	24	400m§	5.0m	70	8.7	200A	DO35
70	1S2240A	5	24	400m	5.0m	75	8.0	150A	A1
71	BZX79C24	5	24	400m§	5.0m	80	20mV	200J	DO35
72	BZX96C24	5	24	400m	5.0m	80	8.5	150J	DO7
73	CD970B	5	24	400m	5.2m	33	8.8	200J	u39a
74	CD5252B	5	24	400m	5.2m	33	8.8	200J	u39a
75	CH970	5	24	400m	5.2m	33	8.8	200J	u10
76	CH4116	5	24	400m	250u	150	9.0	200J	u10
77	CH5252	5	24	400m	5.2m	33	8.8	200J	u10
78	MA1240	5	24	400m	5.0m	70	18	200J	A24d
79	MZL324	5	24	400m	500u	120	9.3	175J	DO35
80	RD24JB	5	24	400m	5.0m	120		175J	DO35
81	Z5B24	5†	24	400m§	5.0m	80	10	200J	DO7
82	1N970A	10	24	400m	5.2m	33		175S	A398a
83	1N5542A	10	24	400m§	1.0m			175A	DO7
84	1S2240	10	24	400m	5.0m	75	8.0	150A	A1
85	1N970	20	24	400m	5.2m	33		175S	A398a
86	1N5542	20	24	400m§	1.0m			175A	DO7
87	GZA24		24	500m	5.0m	50 †	11	175J	A159
88	1N6009D	1	24	500m	5.0m	62		200J	DO35
89	Z0A24	1†	24	500m	5.0m	40 †	10	200J	DO29
90	1N6009C	2	24	500m	5.0m	62		200J	DO35
91	1N5252B	5	24	500m	5.2m	33	8.8	200A	A398a
92	1N5868B	5	24	500m	5.2m	78		150C	M859
93	1N6009B	5	24	500m	5.0m	62		200J	DO35
94	BZX46C24	5	24	500m	5.2m	33	12	175A	DO35
95	BZX55C24V	5	24	500m	5.0m	80	21mV	175J	DO35
96	BZX83C24	5	24	500m	5.0m	80	8.5	175A	DO35
97	BZX83C24V	5†	24	500m	5.0m	220	19mV	175J	DO35
98	BZX97C24	5	24	500m	5.0m	80	8.5	175J	DO35
99	BZY88C24V	5	24	500m	5.0m	75	21m	175	DO35
100	CTZ24A	5	24	500m	5.0m	380	1.2k	200	DO35
101	MA5240	5	24	500m	5.0m	70	18	125J	M990
102	MLL5252B	5.0	24	500m§	5.2m	33	8.8	200J	F140
103	MTZ623,A	5†	24	.50	5.0m	59		175A	A60e
104	MZ324,A,B	5	24	500m	5.0m	45	8.5	175J	DO35
105	RD24EB	5	24	500m	5.0m	75	8.0	175J	DO35
106▼	SZP5-24-5-1	5.0	24	500m	1.0m			175	u5a
107▼	SZ.5-24-5-25	5.0	24	500m	25m			175	u5a
108	Z0B24	5†	24	500m	5.0m	40 †	10	200J	DO29
109	ZMM24	5†	24	500m	5.0m	80	9.0	175J	F135
110	ZMM5252B	5.0	24	500m§	5.2m	33	8.7	200J	F139
111	ZPD24	5	24	500m	5.0m	80	9.0	175J	DO35
112	BZV55C24	5.2	24	500m	5.0m	70	20	200J	F139
113	BZV60C24	5.2	24	500m	5.0m	70	20	200J	DO34
114	05Z24	6.0	24	500m	5.0m	70	9.2	175J	DO35
115	1N5252A	10	24	500m	5.2m	33	8.8	200A	A398a
116	1N5868A	10	24	500m	5.2m	78		150C	M859
117	1N6009A	10	24	500m	5.0m	78		200J	DO35
118	CTZ24	10	24	500m	5.0m	380	1.2k	200	DO35
119	MLL5252A	10	24	500m§	5.2m	33	8.8	200J	F140
120▼	SZP5-24-10-1	10	24	500m	1.0m			175	u5a
121▼	SZ.5-24-10-25	10	24	500m	25m			175	u5a
122	ZMM5252A	10	24	500m§	5.2m	33	8.7	200J	F139
123	1N5252	20†	24	.50	5.2m			200A	A398a
124	1N6009	20	24	500m	5.0m	78		200J	DO35
125	MLL5252	20	24	500m§	5.2m	33		200J	F140
126▼	SZP5-24-20-1	20	24	500m	1.0m			175	u5a
127▼	SZ.5-24-20-25	20	24	500m	25m			175	u5a
128	ZMM5252	20	24	500m§	5.2m	33	8.7	200J	F139
129	ZPD24V	5†	24	550m	5.0m	220	21mV	175J	DO35
130	1N4641	5	24	.60	5.2m	750	8.8	200A	DO14
131	MVS240	8.3	24	625m	5.0m	25	645m	150J	M764a
132	1N3688B	5	24	750m	5.2m	33	8.0	175S	A1az
133	BZV41C24	5	24	750m	5.0m	70	8.0	175S	A412
134	MC6123,A	5†	24	.75	10m	59		175A	A2d
135	1N3688A	10	24	750m	5.2m	33	8.0	175S	A1az
136	1N3688	20	24	750m	5.2m	33	8.0	175S	A1az
137	HZ24PB		24	800m	10m	16		175J	DO41
138	DZB24		24	1.0	10m	30	20mV	150J	A298ap
139	GZB24		24	1.0		30	20mV		A298ap
140	GZB24C		24	1.0		30	20mV		A298ap
141	MA2240		24	1.0	10m	20	20	200J	A277r
142	Z4A24	1†	24	1.0	10m	29	9.0	200J	DO29
143	1N3029B	5	24	1.0	10m	25		175A	A31a
144	1N4171B	5	24	1.0 §	10m	25		200S	DO29
145	1N4336B	5	24	1.0	11m	25	8.0	300S	DO7
146	1N4413B	5	24	1.0	11m	13	8.0	175A	A1cm
147	1N4670	5	24	1.0	11m	600	8.8	200A	DO15
148	1N4749A	5	24	1.0	11m	25		200A	DO41
149	1N5572B	5	24	1.0 §	10m	25		200A	A60ac
150	AP24.0A,B	5†	24	1.0 †	5.2m	50			DO35
151	APD24.0A,B	5†	24.0	1.0 †	11m	40			A1rx
152	BZ240	5	24	1.0	10m	25	8.3	175J	A60t
153	BZV85C24	5	24	1.0	10m	30	21mV	200J	DO41
154	BZX78C24	5	24	1.0	10m	20	20mV	200J	
155	BZX85C24	5	24	1.0 §	10m	25	9.5	150A	DO41
156	CD4749	5	24	1.0	10m	25	8.8	200J	u39a
157	CH4749	5	24	1.0	10m	25	8.0	200J	u10
158	CZ24,A,B,D	5†	24	1.0	20m	28	8.0	175	DO15
159	MZ424,A,B	5	24	1.0	10	25	8.2	175J	DO41
160	PL24Z	5	24	1.0	25m	15	8.5	150J	
161	PR248-RT	5	24	1.0	10m	25 †			DO7
162	RD24P	5.0	24	1.0	5.0m	70	8.8	150J	M1008
163▼	SZ1-24-5-1	5.0	24	1.0	1.0m			175	u5b
164▼	SZ1-24-5-25	5.0	24	1.0	25m			175	u5b
165	TZB24B	5	24	1.0 §	1.0m		9.4	175A	A1ty
166	UZ8724	5	24	1.0	10m	25	8.0	175	A380
167	VR24,A,B	5†	24	1.0	10m	25		125A	A1b
168	Z4B24	5†	24	1.0	10m	29	9.0	200J	DO29
169	Z24.0	5†	24	1.0	10m	6.4 †	8.0	150A	DO41
170	ZB24	5†	24	1.0 §	10m	25		150A	A1bc
171	ZB24B	5	24	1.0	10m	25		100C	A1bc
172	ZM4749A	5.0	24	1.0 §	10m	25		200J	F139
173	AW08-24B	5.2	24	1.0	10m	15	8.1	175J	A60au
174	AW08-24A	8.1	24	1.0	10m	15	8.1	175J	A60au
175	1N1780	10	24	1.0	15m	18		175A	DO13Ø
176	1N3029A	10	24	1.0	10m	25		175A	A31a
177	1N4171A	10	24	1.0 §	10m	25		200S	DO29
178	1N4336A	10	24	1.0	11m	25	8.0	300S	DO7
179	1N4413A	10	24	1.0	11m	13	8.0	175A	A1cm
180	1N4749	10	24	1.0	11m	25		200A	DO41
181	1N5572A	10	24	1.0 §	10m	25		200A	A60ac
182	1S237	10	24	1.0	12m	30	8.3	150J	A56a
183	1Z24	10	24	1.0	10m	30	8.3	150J	DO15
184▼	SZ1-24-10-1	10	24	1.0	1.0m			175	u5b
185▼	SZ1-24-10-25	10	24	1.0	25m			175	u5b
186	TZB24A	10	24	1.0 §	1.0m		9.4	175A	A1ty
187	UZ8824	10	24	1.0	10m	25	8.0	175	A380
188	ZB24A	10	24	1.0	10m	25		100C	A1bc
189	ZM4749	10	24	1.0 §	10m	25		200J	F139
190	1N3029	20	24	1.0	10m	25		175A	A31a
191	1N4171	20	24	1.0 §	10m	25		200S	DO29
192	1N4336	20	24	1.0	11m	25	8.0	300S	DO7
193	1N4413	20	24	1.0	10m	13		175S	A266a
194	1N5572	20	24	1.0 §	10m			200A	A60ac
195▼	SZ1-24-20-1	20	24	1.0	1.0m			175	u5b
196▼	SZ1-24-20-25	20	24	1.0	25m			175	u5b
197	1N4841B	5	24	1.2	11m	25	8.8	175	DO29
198	1N4841A	10	24	1.2	11m	25	8.8	175	DO29
199	1N4841	20	24	1.2	11m	25	8.8	175	DO29
200	BZD10C24	5	24	1.3	25m	15	11		DO13
201	BZW22C24	5	24	1.3	25m	14	11		DO41
202	BZX61C24	5	24	1.3	10m	25	6.0	175J	DO15
203	BZX85C24V	5†	24	1.3	10m	600	18mV	175J	DO41
204	BZX87C24	5	24	1.3	10m	20	8.3	200J	A60al
205	BZY97C24	5	24	1.3	25m	15	11		A1rx
206	ZD24	5	24	1.3	25	15	7.0	150J	DO13
207	ZY24	5	24	1.3	25m	15	9.0	150J	A1bg
208	ZPY24	11	24	1.3	25m	14	12	200J	DO41

SYMBOLS AND CODES EXPLAINED IN INTERPRETER

2. VOLTAGE REFERENCE DIODES - $V_Z \geq 24$ V (Cont'd)

IN ORDER OF: (1) REF. VOLTAGE (2) PD MAX (3) TOLERANCE & (4) TYPE NUMBER

LINE No.	4 TYPE No.	3 TOL ± (%)	1 NOM. REF. VOLT. (V)	2 PD @ 25°C MAX (W)	TEST CUR. Izt (A)	DYN. IMP. MAX (Ω)	TEMP. COEFF Tc MAX	TEMP MAX (°C)	DWG. NO.
1	1N5934D	1	24	1.5	15m	19		200J	DO41
2	1N5934C	2	24	1.5	15m	19		200J	DO41
3	1N3798B	5	24	1.5	16m	17	8.8	175S	C14Ø
4	1N4474	5	24	1.5	11m	16		175A	A60y
5	1N5934B	5	24	1.5	15m	19		200J	DO41
6	1S4024,A	5†	24	1.5	10m	18	8.5	150A	DO1
7	BZY95C24	5	24	1.5	20m	14	7.5	175J	DO1
8	BZY97C24V	5†	24	1.5	25m	15	20mV	150J	A1bg
9	MC6323,A	5†	24	1.5	50m	50			A1q
10▼	SZ1.5-24-5-1								
		5.0	24	1.5	1.0m			175	u5b
11	1N3798A	10	24	1.5	16m	17	8.8	175S	C14Ø
12	1N5934A	10	24	1.5	15m	19		200J	DO41
13▼	SZ1.5-24-10-1								
		10	24	1.5	1.0m			175	u5b
14	1N3798	20	24	1.5	16m	17	8.8	175S	C14Ø
15	1N5934	20	24	1.5	15m	19		200J	DO41
16▼	SZ1.5-24-20-1								
		20	24	1.5	1.0m			175	u5b
17	2EZ24D5	5	24	2.0	20m	13		200J	A1ay
18	2VR24,A,B	5†	24	2.0	21m	20			A3e
19	BZV47C24	5	24	2.0	25m	15	8.0	175J	A344r
20	LMZ24A	5	24	2.0	21m	12	8.8	150A	DO41
21	ZBC24	5†	24	2.0 §	21m	10		150A	A1bc
22	ZBC24B	5	24	2.0	21	10			A1ty
23	2EZ24D10	10	24	2.0	20m	13		200J	A1ay
24	LMZ24	10	24	2.0	21m	12	8.8	150A	DO41
25	ZBC24A	10	24	2.0	21	10			A1ty
26	2EZ24D	20	24	2.0	20m	13		200J	A1ay
27	BZV15C24	5	24	2.2	500m	2.0	8.0	150J	M754Ø
28	Z7A24	1†	24	2.5	500m	2.0	9.0	200J	S457Ø
29	1N5032A	5	24	2.5	26m	10	8.0	150	A1gn
30	BZX70C24	5	24	2.5	20m	14	18mV	150J	A171b
31	Z2B24	5†	24	2.5	20m	18	9.0	200J	DO1
32	1N5032	10	24	2.5	26m	10	8.0	150	A1gn
33	3EZ24D1	1.0	24	3.0	31m	9.0		150J	A1ay
34	3EZ24D2	2.0	24	3.0	31m	9.0		150J	A1ay
35	3EZ24D3	3.0	24	3.0	31m	9.0		150J	A1ay
36	3EZ24D4	4.0	24	3.0	31	9.0		150J	A1ay
37	1N5075	5	24	3.0	30m	10		175A	A146u
38	3EZ24D5	5	24	3.0	31m	9.0		200J	A1ay
39	3VR24,A,B	5†	24	3.0	30m	12			A3al
40	BZV16C24	5	24	3.0	21m	25	8.0	175	DO3
41	MZ724	5	24	3.0	30m	10	8.0	175A	A146j
42	UDZ724	5	24	3.0	30m	10		175A	A356a
43	UZ724	5	24	3.0	30m	10	8.0	175A	A380
44	ZCC24	5†	24	3.0 §	30m	10		150A	A1ey
45	ZCC24B	5	24	3.0	30m	10			A1ey
46	3EZ24D10	10	24	3.0	31m	9.0		200J	A1ay
47	MZ824	10	24	3.0	30m	10	8.0	175A	A146j
48	UZ824	10	24	3.0	30m	10	8.0	175A	A380
49	ZCC24A	10	24	3.0	30m	10			A1ey
50	3EZ24D	20	24	3.0	31m	9.0		200J	A1ay
51	MZ924	20	24	3.0	30m	10	8.0	175A	A146j
52	UZ924	20	24	3.0	30m	10	8.0	175A	A380
53▼	BZT03/D24	10	24	3.2	25m	15	11	175J	A94g
54	3T24,A,B	5†	24	3.5	15m	18			DO4
55▼	SZ3-24-5-1	5.0	24	5.0	1.0m			175	u5c
56▼	SZ3-24-5-25								
		5.0	24	5.0	25m			175	u5c
57▼	SZ3-24-10-1								
		10	24	5.0	1.0m			175	u5c
58▼	SZ3-24-10-25								
		10	24	5.0	25m			175	u5c
59▼	SZ3-24-20-1								
		20	24	5.0	1.0m			175	u5c
60▼	SZ3-24-20-25								
		20	24	5.0	25m			175	u5c
61	HZ24-2	2	24.1	400m	2.0m	70	20mV	175J	DO35
62	HZ24-2L	2	24.1	400m	500u	120	7.3	175J	DO35
63	HZ24H2	2	24.1	500m	2.0m	70	20mV	175J	DO35
64	AU01-24	6	24.1	2.5	25m	15	8.9	165J	A333b
65	BZX84C24	5	24.2	200m	5.0m	70	9.0	150J	M500d
66	HZS24JB2	2.5	24.2	400m	5.0m	120		200J	A380d
67	RD24JSB2(A)								
		2.5	24.2	400m	5.0m	120	8.7	175J	DO34
68	RD24JSB(A)	5.0	24.2	400m	5.0m	120		175J	DO34
69	RD24EB4		24.2	500m	5.0m	35		175J	A277b
70	RD24EL4		24.2	500m	1.0m	35		175J	A277b
71	HZ24EB4	2.5	24.2	500m	5.0m	35		175J	DO35
72	RD24FB	5	24.2	1.0	10m	16		175J	A297c
73	AW01-24	6	24.2	1.0	10m	15	8.1	150J	A333
74	ZMY24	6	24.2	1.3	25	14	9.5	200J	F149
75	3KZ27	10†	24.3	3.0 §	50m		.09		A3ak§
76	RD24MB2	3	24.5	200m	5.0m	60		150	
77	BZY83C24V5	5	24.5	.25	5.0m	200	10	150J	C1g
78	RD24FB3		24.5	1.0	10m	16		175J	A277r
79	RD27EB1		24.8	500m	5.0m	45		175J	A277b
80	RD27EL1		24.8	500m	1.0m	45		175J	A277b
81	ZS24.8	5†	24.8	750m	7.5m	60	500m	150A	C3h
82	1N1738	5	24.8	.80	7.5m	80	80	150C	A69x
83	1N1738A	5	24.8	.80	7.5m	80	40	150C	A69x
84	HZ24-3	2	24.9	400m	2.0m	70	20mV	175J	DO35
85	HZ24-3L	2	24.9	400m	500u	120	7.4	175J	DO35
86	RD24JSB3(A)								
		2.5	24.9	400m	5.0m	120	8.7	175J	DO34
87	HZS24JB3	2.6	24.9	400m	5.0m	120		200J	A380d
88	HZ24H3	2	24.9	500m	2.0m	70	20mV	175J	DO35
89	HZ27EB1	2.3	24.9	500m	5.0m	45		175J	DO35
90	CD5360B	5	25		50m	4.0	8.5	200J	u39b
91	MMBZ5253	5	25		5.0m	35			M500
92▼	TMPZ5253	5.0	25		5.0m	35			TO236Ø
93	RD24MB3	3	25	200m	5.0m	60		150	
94	1N4117	5	25	.25	150m			200J	DO7
95	1N4710	5	25	.25	.05m			200A	DO14
96	1/4M25Z10	10†	25	250m	2.5m	50		175J	E204h
97	1N5543D	1	25	400m§	1.0m	100		175A	DO7
98	1N5543C	2	25	400m§	1.0m	100		175A	DO7
99	1N5543B	5	25	400m§	1.0m	100		175A	DO7
100	CD5253B	5	25	400m	5.0m	35	8.9	200J	u39a
101	CH4117	5	25	400m	250u	150	9.0	200J	u10
102	CH5253	5	25	400m	5.0m	35	8.9	200J	u10
103	1N5543A	10	25	400m§	1.0m			175A	DO7
104	1N5543	20	25	400m§	1.0m			175A	DO7
105	1N5253B	5	25	500m	5.0m	35	8.9	200A	A398a
106	1N5869B	5	25	500m	5.0m	85		150C	M859
107	MLL5253B	5.0	25	500m§	5.0m	35	8.9	200J	F140
108	ZMM5253B	5.0	25	500m§	5.0m	35	8.9	200J	F139
109	1N5253A	10	25	500m	5.0m	35	8.9	200A	A398a
110	1N5869A	10	25	500m	5.0m	85		150C	M859
111	EQA01-25R	10	25	500m	5.0m	30	.08	125J	A387
112	MLL5253A	10	25	500m§	5.0m	35	8.9	200J	F140
113	ZMM5253A	10	25	500m§	5.0m	35	8.9	200J	F139
114	1N5253	20†	25	.50	5.0m			200A	A398a
115	MLL5253	20	25	500m§	5.0m	35		200J	F140
116	ZMM5253	20	25	500m§	5.0m	35	8.9	200J	F139
117	BZ250	5	25.0	1.0	10m	26	8.4	175J	DO41
118	CZ25,A,B,D	5†	25	1.0	20m	29	8.0	175	DO15
119	1S238	10	25	1.0	12m	30	8.1	150J	A56a
120	EQB01-25	10	25	1.0	10m	20	.08	140J	A21b
121	1N3951	5	25	1.5	15m	18	8.4	175S	C12
122	ZBC25	5†	25	2.0 §	20m	10		150A	A1bc
123	ZBC25B	5	25	2.0	20	10			A1ty
124	ZBC25A	10	25	2.0	20	10			A1ty
125	1N5033A	5	25	2.5	25m	11	8.0	150	A1gn
126	1N5033	10	25	2.5	25m	11	8.0	150	A1gn
127	ZCC25	5†	25	3.0 §	30m	10		150A	A1ey
128	ZCC25B	5	25	3.0	30m	10			A1ey
129	ZCC25A	10	25	3.0	30m	10			A1ey
130	PS1503	5	25.2	.25	10m	45	.20	150A	A1gc
131	PS1503A	5	25.2	.25	10m	45	.10	150A	A1gc
132	RD24AN		25.3	250m	10m	100		175J	A277b
133	RD24BN		25.3	1.0	20m	21		150J	A427
134	RD27FB1		25.3	1.0	10m	16		175J	A277r
135	RD24CN		25.3	3.0	60m	12		150J	S547
136	RD27EB2		25.5	500m	5.0m	45		175J	A277b
137	RD27EL2		25.5	500m	1.0m	45		175J	A277b
138	HZ27EB2	2.4	25.6	500m	5.0m	45		175J	DO35
139	EQA02-25AC	10	25.6	500m	5.0m	45	.08	175J	Alac
140	RD27JSB1(A)								
		2.5	25.8	400m	5.0m	150	8.8	175J	DO34
141	HZ27-1	3	25.8	400m	2.0m	80	24mV	175J	DO35
142	HZ27H1	3	25.8	500m	2.0m	80	24mV	175J	DO35
143	RD24EC	5	25.8	500m	5.0m	75	8.0	175J	DO35
144	HZ24PC		25.8	800m	10m	16		175J	DO41
145	RD24FC	6	25.8	1.0	10m	16		175J	A297c
146	HZ27-1L	3	25.9	400m	500u	150	7.5	175J	DO35
147	RD27EL		25.9	500m	1.0m	45		175J	A277b
148	1N2049C	5	26		150m	8.0		150A	DO4
149	BZ260	5	26	1.0	10m	28	8.4	175J	A60t
150	PR249-RT	5	26	1.0	10m	28 †			DO7
151	RD27EB3		26.2	500m	5.0m	45		175J	A277b
152	RD27EL3		26.2	500m	1.0m	45		175J	A277b
153	HZ27EB3	2.4	26.3	500m	5.0m	45		175J	DO35
154	RD27FB2		26.4	1.0	10m	16		175J	A277r
155	EQA01-26R	9	26.5	500m	5.0m	40	.08	125J	A387
156	EQB01-26	10	26.5	1.0	10m	30	.08	140J	A21b
157	BZY88C27	5	26.6	400m	5.0m	85	8.7	200J	DO7
158	RD29BL		26.6	1.0	10m	28		150J	A427
159	RD29CL		26.6	3.0	30m	15		150J	S547
160	RD27JSB2(A)								
		2.5	26.7	400m	5.0m	150	8.8	175J	DO34
161	HZ27-2	3	26.9	400m	2.0m	80	24mV	175J	DO35
162	HZ27-2L	3	26.9	400m	500u	150	7.5	175J	DO35
163	RD27EB4		26.9	500m	5.0m	45		175J	A277b
164	RD27EL4		26.9	500m	1.0m	45		175J	A277b
165	HZ27H2	3	26.9	500m	2.0m	80	24mV	175J	DO35
166	TZPD27		27		5.0m	80	9.0		DO35
167♦	TZPY27		27		25m	15	9.0		DO41
168	BZV49C27	5	27		5.0m	80	4.0	150J	M1008
169	CD4750A	5.0	27		9.5m	35		200	u52
170	CD5361B	5	27		50m	5.0	8.6	200J	u39b
171	MMBZ5254	5	27		4.6m	41			M500
172	NC27	5	27		2.0m	80	8.0		u47
173▼	TMPZ5254	5.0	27		4.6m	41			TO236Ø
174	DSZ3027	10	27		25m	12	9.0		A266
175	ZTK27	10	27		5.0m	25	200m	150J	DO35
176	1N1991B	1	27	150m	1.0m	200	9.6	150	C1
177	1N1991A	5	27	150m	1.0m	200	9.6	150	C1
178	MA3270	5	27	150m	2.0m	80	21	125J	M988
179	1N1991	10	27	150m	1.0m	200	9.6	150	C1
180	1N1937B	1	27	200m	1.0m	200	9.6	150A	A82e
181	1N1937A	5	27	200m	1.0m	200	9.6	150A	A82e
182	BZX84C27	5	27	200m	2.0m	80	9.0	150J	M500d
183	RD27MB	5.0	27	200m	2.0m	70		150J	M713b
184	1N1937	10	27	200m	1.0m	200	9.6	150A	A82e
185	1N724A	5	27	250m	4.0m	35	8.8	175A	DO7
186	1N4118	5	27	.25	.25m	150		200J	DO7
187	1N4711	5	27	.25	.05m			200A	DO14
188	BZX59C27	5	27	250m	5.0m	200	9.0	150A	DO7
189	1/4M27Z10	10†	27	250m	2.3m	58		175J	E204h
190	1/4M30Z10	10†	27	250m	2.3m	58		175J	E204h
191	1N724	10	27	250m	4.0m	35	8.8	175A	DO7
192	1N724B	20	27	.25	4.0m	35			DO7
193	PTC511	10	27	257m†	9.5m	35			A1bc
194	BZ971	5	27	300m	4.6m	41	9.0	175S	M765
195	BZ971F	5	27	300m	4.6m	41	9.0	175S	TO86
196	BZ971T	5	27	300m	4.6m	41	9.0	175S	TO18
197	MC6024,A	5†	27	.30	1.0m	69		175	A2m
198	C5D5254	10	27	320m	4.6m			150S	M713a
199	BZX88C27	5	27	350m	5.0m	80	8.0	175J	A412
200	MA4270	5	27	370m	2.0m	80	21	200J	DO34
201	1N1964B	1	27	400m	1.0m	200	9.6	150	DO7
202	1N5746D	1	27	400m§	2.0m	80	8.7	200A	DO35
203	Z5A27	1†	27	400m§	5.0m	80	10	200J	DO7
204	1N5746C	2	27	400m§	2.0m	80	8.7	200A	DO35
205	BZX79B27	2	27	400m§	2.0m	80	23mV	200J	DO35
206	1N669	5	27	.40	5.0m	35	8.5	200S	A31b
207	1N971B	5	27	400m	4.6m	41		175S	A398a
208	1N1964A	5	27	400m	1.0m	200	9.6	150	DO7

SYMBOLS AND CODES EXPLAINED IN INTERPRETER

2. VOLTAGE REFERENCE DIODES - $V_Z \geq 24$ V (Cont'd)

IN ORDER OF: (1) REF. VOLTAGE (2) PD MAX (3) TOLERANCE & (4) TYPE NUMBER

LINE No.	4 TYPE No.	3 TOL ± (%)	1 NOM. REF. VOLT. (V)	2 PD @ 25°C MAX (W)	TEST CUR. Izt (A)	DYN. IMP. MAX (Ω)	TEMP. COEFF Tc MAX	TEMP MAX (°C)	DWG. NO.
1	1N3528	5	27	.40	4.0m	40	10	200A	DO7
2	1N5746B	5	27	400m§	2.0m	80	8.7	200A	DO35
3	1S2270A	5	27	400m	5.0m	85	8.5	150A	A1
4	BZX79C27	5	27	400m§	2.0m	80	23mV	200J	DO35
5	BZX96C27	5	27	400m	5.0m	80	8.5	150J	DO7
6	CD971B	5	27	400m	4.6m	41	9.0	200J	u39a
7	CD5254B	5	27	400m	4.6m	41	9.0	200J	u39a
8	CH971	5	27	400m	4.6m	41	9.0	200J	u10
9	CH4118	5	27	400m	250u	150	9.0	200J	u10
10	CH5254	5	27	400m	4.6m	41	9.0	200J	u10
11	MA1270	5.0	27	400m	2.0m	80	21	200J	DO-7
12	MZL327	5	27	400m	500u	150	9.5	175J	DO35
13	RD27JB	5	27	400m	5.0m	150		175J	DO35
14	RD27JSB(A)	5.0	27.0	400m	5.0m	150		175J	DO34
15	Z5B27	5†	27	400m§	5.0m	80	10	200J	DO7
16	1N971A	10	27	400m	4.6m	41		175S	A398a
17	1N1964	10	27	400m	1.0m	200	9.6	150	DO7
18	1N971	20	27	400m	4.6m	41		175S	A398a
19	05Z27		27	500m	5.0m	80		175J	DO35
20	GZA27		27	500m	5.0m	56 †	10	175J	A159
21	1N6010D	1	27	500m	5.0m	70		200J	DO35
22	Z0A27	1†	27	500m	5.0m	50 †	10	200J	DO29
23	1N6010C	2	27	500m	5.0m	70		200J	DO35
24	HZ27EB4	2.5	27.0	500m	5.0m	45		175J	DO35
25	1N5254B	5	27	500m	4.6m	41	9.0	200A	A398a
26	1N5870B	5	27	500m	4.6m	98		150C	M859
27	1N6010B	5	27	500m	5.0m	70		200J	DO35
28	BZX46C27	5	27	500m	4.6m	41	12	175A	DO35
29	BZX55C27V	5	27	500m	5.0m	80	23mV	175J	DO35
30	BZX83C27	5	27	500m	5.0m	80	8.5	175A	DO35
31	BZX83C27V	5†	27	500m	5.0m	250	24mV	175J	DO35
32	BZY88C27V	5	27	500m	5.0m	85	23m	175	DO35
33	CTZ27A	5	27	500m	5.0m	400	1.2k	200	DO35
34	MLL5254B	5.0	27	500m§	4.6m	41	9.0	200J	F140
35	MTZ624,A	5†	27	.50	1.0m	69		175A	A60e
36	MZ327,A,B	5	27	500m	5.0m	50	8.7	175J	DO35
37	RD27EB	5	27	500m	5.0m	95	8.1	175J	DO35
38▼	SZP5-27-5-1	5.0	27	500m	1.0m			175	u5a
39▼	SZ.5-27-5-25	5.0	27	500m	25m			175	u5a
40	Z0B27	5†	27	500m	5.0m	50 †	10	200J	DO29
41	ZMM5254B	5.0	27	500m§	4.6m	41	9.0	200J	F139
42	ZPD27	5	27	500m	5.0m	80	9.0	175J	DO35
43	BZX97C27	7	27	500m	5.0m	80	8.5	175J	DO35
44	ZMM27	7†	27	500m	5.0m	80	9.0	175J	F135
45	BZV55C27	7.5	27	500m	2.0m	80	23	200J	F139
46	BZV60C27	7.5	27	500m	2.0m	80	23	200J	DO34
47	1N3407	10	27	500m	3.0m	75	6.8	200S	P5
48	1N3420	10	27	.50	1.0m	280	7.8	200A	P5
49	1N5254A	10	27	500m	4.6m	41	9.0	200A	A398a
50	1N5870A	10	27	500m	4.6m	98		150C	M859
51	1N6010A	10	27	500m	5.0m	88		200J	DO35
52	CTZ27	10	27	500m	5.0m	400	1.2k	200	DO35
53	MLL5254A	10	27	500m§	4.6m	41	9.0	200J	F140
54▼	SZP5-27-10-1	10	27	500m	1.0m			175	u5a
55▼	SZ.5-27-10-25	10	27	500m	25m			175	u5a
56	ZMM5254A	10	27	500m§	4.6m	41	9.0	200J	F139
57	1N5254	20†	27	.50	4.6m			200A	A398a
58	1N6010	20	27	500m	5.0m	88		200J	DO35
59	MLL5254	20	27	500m§	4.6m	41		200J	F140
60▼	SZP5-27-20-1	20	27	500m	1.0m			175	u5a
61▼	SZ.5-27-20-25	20	27	500m	25m			175	u5a
62	ZMM5254	20	27	500m§	4.6m	41	9.0	200J	F139
63	ZPD27V	5†	27	550m	5.0m	250	24mV	175J	DO35
64	1N4642	5	27	.60	4.6m	750	9.0	200A	DO14
65	1N1517A	5	27	750m	5.0m	82	9.5	200S	DO12
66	1N3689B	5	27	750m	4.6m	41	8.5	175S	A1az
67	BZV41C27	5	27	750m	2.0m	80	8.0	175S	A412
68	MC6124,A	5†	27	.75	5.0m	69		175A	A2d
69	1N1517	10	27	750m	5.0m	82	9.5	200S	DO12
70	1N3689A	10	27	750m	4.6m	41	8.5	175S	A1az
71	1N3689	20	27	750m	4.6m	41	8.5	175S	A1az
72	HZ27PB		27	800m	10m	16		175J	DO41
73	DZB27		27	1.0	10m	30	23mV	150J	A298ap
74	GZB27		27	1.0		30	23mV		A298ap
75	GZB27C		27	1.0		30	23mV		A298ap
76	1N1881B	1	27	1.0	8.0m	18 †	6.6	175A	DO13
77	Z4A27	1†	27	1.0	10m	32	9.5	200J	DO29
78	1N1430	5	27	1.0	5.0m	50 †	8.5	200A	A154
79	1N1528A	5	27	1.0	7.0m	45	9.5	200S	DO3
80♦	1N1781A	5	27	1.0	15m	23		175A	DO13⊠
81	1N1881A	5	27	1.0	8.0m	27	6.6	200C	A41e
82	1N3030B	5	27	1.0	9.5m	35		175A	A31a
83	1N4172B	5	27	1.0 §	9.5m	35		200S	DO29
84	1N4337B	5	27	1.0	9.5m	35	8.5	300S	DO7
85	1N4414B	5	27	1.0	9.5m	14	8.5	175A	A1cm
86	1N4671	5	27	1.0	9.5m	600	9.0	200A	DO15
87	1N4750A	5	27	1.0	9.5m	35		200A	DO41
88	1N5573B	5	27	1.0 §	9.5m	35		200A	A60ac
89	APD27.0A,B	5†	27	1.0 †	9.5m	40			A1rx
90	BZ270	5	27	1.0	10m	30	8.4	175J	A60t
91	BZV85C27	5	27	1.0	8.0m	40	24mV	200J	DO41
92	BZX78C27	5	27	1.0	10m	25	23mV	200J	
93	BZX85C27	5	27	1.0 §	8.0m	30	9.5	150A	DO41
94	CD4750	5	27	1.0	9.5m	35	9.0	200J	u39a
95	CH4750	5	27	1.0	9.5m	35	8.5	200J	u10
96	CZ27,A,B,D	5†	27	1.0	20m	31	8.5	175	DO15
97	MA2270	5	27	1.0	5.0m	25	23	200J	A415
98	PL27Z	5	27	1.0	25m	15	8.5	150J	
99	PR250-RT	5	27	1.0	10m	30 †			DO7
100	RD27P	5.0	27	1.0	5.0m	80	8.9	150J	M1008
101▼	SZ1-27-5-1	5.0	27	1.0	1.0m			175	u5b
102▼	SZ1-27-5-25	5.0	27	1.0	25m			175	u5b
103	TZB27B	5	27	1.0 §	1.0m		9.6	175A	A1ty
104	UZ8727	5	27	1.0	9.5m	35	9.0	175	A380
105	VR27,A,B	5†	27	1.0	9.5m	35		125A	A1b
106	Z4B27	5†	27	1.0	10m	32	9.5	200J	DO29
107	Z27.0	5†	27	1.0	10m	7.0 †	8.0	150A	DO41
108	ZB27	5†	27	1.0 §	9.5m	35		150A	A1bc
109	ZB27B	5	27	1.0	9.5m	35		100C	A1bc
110	ZM4750A	5.0	27	1.0 §	9.5m	35		200J	F139
111	AW08-27B	5.4	27	1.0	10m	15	8.2	175J	A60au
112	AW01-27	7	27	1.0	10m	15	8.2	150J	A333
113	RD27FB	7	27	1.0	10m	16		175J	A297c
114	AW08-27A	8.4	27	1.0	10m	15	8.2	175J	A60au
115	1N1528	10	27	1.0	7.0m	45	9.5	200S	DO3
116	1N1781	10	27	1.0	15m	23		175A	DO13⊠
117	1N1881	10	27	1.0	8.0m	27	6.6	200C	A41e
118	1N3030A	10	27	1.0	9.5m	35		175A	A31a
119	1N4172A	10	27	1.0 §	9.5m	35		200S	DO29
120	1N4337A	10	27	1.0	9.5m	35	8.5	300S	DO7
121	1N4414A	10	27	1.0	9.5m	14	8.5	175A	A1cm
122	1N4750	10	27	1.0	9.5m	35		200A	DO41
123	1N5573A	10	27	1.0 §	9.5m	35		200A	A60ac
124	1S239	10	27	1.0	12m	30	8.5	150J	A56a
125	1Z27	10	27	1.0	10m	30	8.5	150J	DO15
126	KS527A	10	27	1.0	5.0m	40 †	10	100C	A378
127▼	SZ1-27-10-1	10	27	1.0	1.0m			175	u5b
128▼	SZ1-27-10-25	10	27	1.0	25m			175	u5b
129	TZB27A	10	27	1.0 §	1.0m		9.6	175A	A1ty
130	UZ8827	10	27	1.0	9.5m	35	9.0	175	A380
131	ZB27A	10	27	1.0	9.5m	35		100C	A1bc
132	ZM4750	10	27	1.0 §	9.5m	35		200J	F139
133	1N3030	20	27	1.0	9.5m	35		175A	A31a
134	1N4172	20	27	1.0 §	9.5m	35		200S	DO29
135	1N4337	20	27	1.0	9.5m	35	8.5	300S	DO7
136	1N4414	20	27	1.0	9.5m	14		175S	A266a
137	1N5573	20	27	1.0 §	9.5m			200A	A60ac
138▼	SZ1-27-20-1	20	27	1.0	1.0m			175	u5b
139▼	SZ1-27-20-25	20	27	1.0	25m			175	u5b
140	1N4842B	5	27	1.2	9.3m	35	9.0	175	DO29
141	1N4842A	10	27	1.2	9.3m	35	9.0	175	DO29
142	1N4842	20	27	1.2	9.3m	35	9.0	175	DO29
143	BZX61C27	5	27	1.3	10m	35	6.0	175J	DO15
144	BZX85C27V	5†	27	1.3	8.0m	750	21mV	175J	DO41
145	BZX87C27	5	27	1.3	10m	25	8.5	200J	A60al
146	BZY97C27	5	27	1.3	25m	15	11		A1rx
147	ZD27	5	27	1.3	25	15	7.0	150J	DO13
148	ZY27	5	27	1.3	25m	15	9.0	150J	A1bg
149	BZD10C27	7	27	1.3	25m	15	11		DO13
150	BZW22C27	7	27	1.3	25m	15	11		DO41
151	ZMY27	7	27	1.3	25	15	9.5	200J	F149
152	ZPY27	14	27	1.3	25m	15	12	200J	DO41
153	1N5935D	1	27	1.5	13m	23		200J	DO41
154	1N5935C	2	27	1.5	13m	23		200J	DO41
155	1N3799B	5	27	1.5	14m	20	9.0	175S	C14⊠
156	1N4063	5	27	1.5	10m	45	.50	100	A1ss
157	1N4063A	5	27	1.5	10m	45	.20	100	A1ss
158	1N4475	5	27	1.5	9.5m	18		175A	A60y
159	1N5935B	5	27	1.5	13m	23		200J	DO41
160	1S4027,A	5†	27	1.5	10m	19	8.5	150A	DO1
161	BZY95C27	5	27	1.5	20m	18	7.4	175J	DO1
162	BZY97C27V	5†	27	1.5	25m	15	23mV	150J	A1bg
163	MC6324,A	5†	27	1.5	25m	60			A1q
164▼	SZ1.5-27-5-1	5.0	27	1.5	1.0m			175	u5b
165	1N3799A	10	27	1.5	14m	20	9.0	175S	C14⊠
166	1N5935A	10	27	1.5	13m	23		200J	DO41
167▼	SZ1.5-27-10-1	10	27	1.5	1.0m			175	u5b
168	1N3799	20	27	1.5	14m	20	9.0	175S	C14⊠
169	1N5935	20	27	1.5	13m	23		200J	DO41
170▼	SZ1.5-27-20-1	20	27	1.5	1.0m			175	u5b
171	2EZ27D5	5	27	2.0	18m	18		200J	A1ay
172	2VR27,A,B	5†	27	2.0	18m	25			A3e
173	BZV47C27	5	27	2.0	25m	15	8.5	175J	A344r
174	LMZ27A	5	27	2.0	18m	17	9.0	150A	DO41
175	ZBC27	5†	27	2.0 §	19m	12		150A	A1bc
176	ZBC27B	5	27	2.0	19	12			A1ty
177	2EZ27D10	10	27	2.0	18m	18		200J	A1ay
178	LMZ27	10	27	2.0	18m	17	9.0	150A	DO41
179	ZBC27A	10	27	2.0	19	12			A1ty
180	2EZ27D	20	27	2.0	18m	18		200J	A1ay
181	BZV15C27	5	27	2.2	500m	2.0	8.2	150J	M754⊠
182	Z7A27	1†	27	2.5	500m	2.0	9.5	200J	S457⊠
183	1N5034A	5	27	2.5	23m	12	8.5	150	A1gn
184	BZX70C27	5	27	2.5	20m	18	20mV	150J	A171b
185	Z2B27	5†	27	2.5	20m	20	9.5	200J	DO1
186	AU01-27	7	27	2.5	25m	15	9.0	165J	A333b
187	1N5034	10	27	2.5	23m	12	8.5	150	A1gn
188	3EZ27D1	1.0	27	3.0	28m	10		150J	A1ay
189	3EZ27D2	2.0	27	3.0	28m	10		150J	A1ay
190	3EZ27D3	3.0	27	3.0	28m	10		150J	A1ay
191	3EZ27D4	4.0	27	3.0	28	10		150J	A1ay
192	1N5076	5	27	3.0	25m	12		175A	A146u
193	3EZ27D5	5	27	3.0	28m	10		200J	A1ay
194	3VR27,A,B	5†	27	3.0	28m	18			A3al
195	BZV16C27	5	27	3.0	19m	35	8.5	175	DO3
196	MZ727	5	27	3.0	25m	12	9.0	175A	A146j
197	UDZ727	5	27	3.0	25m	12		175A	A356a
198	UZ727	5	27	3.0	25m	12	9.0	175A	A380
199	ZCC27	5†	27	3.0 §	25m	12		150A	A1ey
200	ZCC27B	5	27	3.0	25m	12			A1ey
201	3EZ27D10	10	27	3.0	28m	10		200J	A1ay
202	3KZ30	10†	27	3.0 §	40m		.09		A3ak§
203	MZ827	10	27	3.0	25m	12	9.0	175A	A146j
204	UZ827	10	27	3.0	25m	12	9.0	175A	A380
205	ZCC27A	10	27	3.0	25m	12			A1ey
206	3EZ27D	20	27	3.0	28m	10		200J	A1ay

SYMBOLS AND CODES EXPLAINED IN INTERPRETER

2. VOLTAGE REFERENCE DIODES - $V_Z \geq 24$ V (Cont'd)

IN ORDER OF: (1) REF. VOLTAGE (2) PD MAX (3) TOLERANCE & (4) TYPE NUMBER

LINE No.	4 TYPE No.	3 TOL ± (%)	1 NOM. REF. VOLT. (V)	2 PD @ 25°C MAX (W)	TEST CUR. Izt (A)	DYN. IMP. MAX (Ω)	TEMP. COEFF Tc MAX	TEMP MAX (°C)	DWG. NO.
1	MZ927	20	27	3.0	25m	12	9.0	175A	A146j
2	UZ927	20	27	3.0	25m	12	9.0	175A	A380
3▼	BZT03/D27	10	27	3.2	25m	15	11	175J	A94g
4	1N1598A	5	27	3.5	25m	24	9.5	200S	DO4
5	1N1598	10	27	3.5	25m	24	9.5	200S	DO4
6▼	SZ3-27-5-1	5.0	27	5.0	1.0m			175	u5c
7▼	SZ3-27-5-25	5.0	27	5.0	25m			175	u5c
8▼	SZ3-27-10-1	10	27	5.0	1.0m			175	u5c
9▼	SZ3-27-10-25	10	27	5.0	25m			175	u5c
10▼	SZ3-27-20-1	20	27	5.0	1.0m			175	u5c
11▼	SZ3-27-20-25	20	27	5.0	25m			175	u5c
12	1N2768	5	27.2		7.5m	80	.50	175A	A1jg
13	1N2768A	5	27.2		7.5m	80	.25	175A	A1jg
14	RD27FB3		27.5	1.0	10m	16		175J	A277r
15	RD30EB1		27.6	500m	5.0m	55		175J	A277b
16	RD30EL1		27.6	500m	1.0m	55		175J	A277b
17	HZ30EB1	2.3	27.7	500m	5.0m	55		175J	DO35
18	EQA02-28AC	10	27.7	500m	5.0m	60	.08	175J	A1ac
19	RD27JSB3(A)	2.5	27.9	400m	5.0m	150	8.8	175J	DO34
20	HZ27-3	3	27.9	400m	2.0m	80	24mV	175J	DO35
21	HZ27-3L	3	27.9	400m	500u	150	7.6	175J	DO35
22	HZ27H3	3	27.9	500m	2.0m	80	24mV	175J	DO35
23	CD5362B	5	28		50m	6.0	8.7	200J	u39b
24	MMBZ5255	5	28		4.5m	44			M500
25▼	TMPZ5255	5.0	28		4.5m	44			TO236⊠
26	1N4119	5	28	.25	.25m	200		200J	DO7
27	1N4712	5	28	.25	.05m			200A	DO14
28	CD5255	10	28	320m	4.5m			150S	M713a
29	1N5544D	1	28	400m§	1.0m	100		175A	DO7
30	1N5544C	2	28	400m§	1.0m	100		175A	DO7
31	1N5544B	5	28	400m§	1.0m	100		175A	DO7
32	CD4119	5	28	400m	250u	200	8.5	200J	u39a
33	CD5255B	5	28	400m	4.5m	44	9.1	200J	u39a
34	CH4119	5	28	400m	250u	200	9.5	200J	u10
35	CH5255	5	28	400m	4.5m	44	9.1	200J	u10
36	1N5544A	10	28	400m§	1.0m			175A	DO7
37	1N5546A	10	28	400m§	1.0m			175A	DO7
38	1N5544	20	28	400m§	1.0m			175A	DO7
39	1N5546	20	28	400m§	1.0m			175A	DO7
40	1N5255B	5	28	500m	4.5m	44	9.1	200A	A398a
41	1N5871B	5	28	500m	4.5m	105		150C	M859
42	MLL5255B	5.0	28	500m§	4.5m	44	9.1	200J	F140
43	ZMM5255B	5.0	28	500m§	4.5m	44	9.1	200J	F139
44	1N5255A	10	28	500m	4.5m	44	9.1	200A	A398a
45	1N5871A	10	28	500m	4.5m	105		150C	M859
46	EQA01-28R	10	28	500m	5.0m	40	.08	125J	A387
47	MLL5255A	10	28	500m§	4.5m	44	9.1	200J	F140
48	ZMM5255A	10	28	500m§	4.5m	44	9.1	200J	F139
49	1N5255	20†	28	.50	4.5m			200A	A398a
50	MLL5255	20	28	500m§	4.5m	44		200J	F140
51	ZMM5255	20	28	500m§	4.5m	44	9.1	200J	F139
52	AP28.0A,B	5†	28	1.0 †	4.5m	50			DO35
53	BZ280	5	28.0	1.0	10m	31	8.4	175J	DO41
54	VR28,A,B	5†	28	1.0	4.0m	35	9.0	125C	A1ex
55	EQB01-28	10	28	1.0	10m	30	.08	140J	A21b
56	2VR28,A,B	5†	28	2.0	4.0m	42			A3e
57	3EZ28D1	1.0	28	3.0	27m	12		150J	A1ay
58	3EZ28D2	2.0	28	3.0	27m	12		150J	A1ay
59	3EZ28D3	3.0	28	3.0	27m	12		150J	A1ay
60	3EZ28D4	4.0	28	3.0	27	12		150J	A1ay
61	3EZ28D5	5	28	3.0	27m	12		150J	A1ay
62	3EZ28D10	10	28	3.0	27m	12		150J	A1ay
63	3EZ28D	20	28	3.0	27m	12		150J	A1ay
64	RD30FB1		28.2	1.0	10m	18		175J	A277r
65	RD29AM		28.3	250m	10m	150		175J	A277b
66	RD29BM		28.3	1.0	10m	28		150J	A427
67	RD29CM		28.3	3.0	30m	15		150J	S547
68	RD30EB2		28.4	500m	5.0m	55		175J	A277b
69	RD30EL2		28.4	500m	1.0m	55		175J	A277b
70	HZ30EB2	2.4	28.4	500m	5.0m	55		175J	DO35
71	1N1319A	5	28.5	150m	200u			150A	C1
72	1N1319	10	28.5	150m	200u			150A	C1
73	RD29A	10	28.5	.20	2.0m	250	9.5	150S	A1dw
74	RD29AK		28.5	250m	10m	150		175J	A277b
75	PS6319,A	15†	28.5	.50	.20m				DO14
76	RD29BK		28.5	1.0	10m	28		150J	A427
77	RD29CK		28.5	3.0	30m	15		150J	S547
78	RD30EL		28.7	500m	1.0m	55		175J	A277b
79	HZ30-1	2	28.9	400m	2.0m	100	28mV	175J	DO35
80	HZ30-1L	2	28.9	400m	500u	200	7.7	175J	DO35
81	HZ30H1	2	28.9	500m	2.0m	100	28mV	175J	DO35
82	RD27EC	5	28.9	500m	5.0m	95	8.2	175J	DO35
83	HZ27PC		28.9	800m	10m	16		175J	DO41
84	RD27FC	6	28.9	1.0	10m	16		175J	A297c
85	RD30JSB1(A)	2.5	29.0	400m	5.0m	200	9.0	175J	DO34
86	RD30EB3		29.0	500m	5.0m	55		175J	A277b
87	RD30EL3		29.0	500m	1.0m	55		175J	A277b
88	BZ290	5	29	1.0	10m	33	8.5	175J	A60t
89	PR251-RT	5	29	1.0	10m	33 †			DO7
90	HZ30EB3	2.4	29.1	500m	5.0m	55		175J	DO35
91	RD30FB2		29.3	1.0	10m	18		175J	A277r
92	RD33EB1		29.4	500m	5.0m	65		175J	A277b
93	RD33EL1		29.4	500m	1.0m	65		175J	A277b
94	BZY88C30	5	29.5	400m	5.0m	95	8.6	200J	DO7
95	RD30EB4		29.7	500m	5.0m	55		175J	A277b
96	RD30EL4		29.7	500m	1.0m	55		175J	A277b
97	3KZ33	10†	29.7	3.0 §	40m		.09		A3ak§
98	HZ30EB4	2.5	29.8	500m	5.0m	55		175J	DO35
99	EQA02-30AC	9	29.8	500m	5.0m	70	.08	175J	A1ac
100	HZ30-2	2	29.9	400m	2.0m	100	28mV	175J	DO35
101	HZ30-2L	2	29.9	400m	500u	200	7.7	175J	DO35
102	RD30JSB2(A)	2.5	29.9	400m	5.0m	200	9.0	175J	DO34
103	HZ30H2	2	29.9	500m	2.0m	100	28mV	175J	DO35
104	TZPD30		30		5.0m	80	9.0		DO35
105	TZPY30		30		25m	20	9.0		DO41
106	ZTK33A		30		5.0m	12 †	0.5	150J	DO35
107	BZV49C30	5	30		5.0m	80	4.0	150J	M1008
108	CD4751A	5.0	30		8.5m	40		200	u52
109	CD5363B	5	30		40m	8.0	8.7	200J	u39b
110	MMBZ5256	5	30		4.2m	49			M500
111	NC30	5	30		2.0m	80	8.0		u47
112▼	TMPZ5256	5.0	30		4.2m	49			TO236⊠
113	DSZ3030	10	30		25m	15	9.0		A266
114	MA3300	5	30	150m	2.0m	80	24	125J	M988
115	BZX84C30	5	30	200m	2.0m	80	9.0	150J	M500d
116	RD30MB	5.0	30	200m	2.0m	80		150J	M713b
117	1N725A	5	30	250m	4.0m	42	8.9	175A	DO7
118	1N4120	5	30	.25	.25m	200		200J	DO7
119	1N4713	5	30	.25	.05m			200A	DO14
120	BZX60C30	5	30	250m	2.0m	250	9.0	150A	DO7
121	1N725	10	30	250m	4.0m	42	8.9	175A	DO7
122	1N725B	20	30	.25	4.0m	42			DO7
123	MC6025,A	5†	30	.30	1.0m	81		175	A2m
124	C5D5256	10	30	320m	4.2m			150S	M713a
125	BZX88C30	5	30	350m	5.0m	80	8.0	175J	A412
126	MA4300	5	30	370m	2.0m	80	24	200J	DO34
127	1N5545D	1	30	400m§	1.0m	100		175A	DO7
128	1N5747D	1	30	400m§	2.0m	80	8.6	200A	DO35
129	Z5A30	1†	30	400m§	5.0m	80	10	200J	DO7
130	1N5545C	2	30	400m§	1.0m	100		175A	DO7
131	1N5747C	2	30	400m§	2.0m	80	8.6	200A	DO35
132	BZX79B30	2	30	400m§	2.0m	80	26mV	200J	DO35
133	1N972B	5	30	400m	4.2m	49		175S	A398a
134	1N3529	5	30	.40	4.0m	48	10	200A	DO7
135	1N5545B	5	30	400m§	1.0m	100		175A	DO7
136	1N5747B	5	30	400m§	2.0m	80	8.6	200A	DO35
137	1S2300A	5	30	400m	5.0m	95	9.0	150A	A1
138	BZX79C30	5	30	400m§	2.0m	80	26mV	200J	DO35
139	BZX96C30	5	30	400m	5.0m	80	8.5	150J	DO7
140	CD972B	5	30	400m	4.2m	49	9.1	200J	u39a
141	CD4120	5	30	400m	250u	200	8.5	200J	u39a
142	CD5256B	5	30	400m	4.2m	49	9.1	200J	u39a
143	CH972	5	30	400m	4.2m	49	9.1	200J	u10
144	CH4120	5	30	400m	250u	200	9.5	200J	u10
145	CH5256	5	30	400m	4.2m	49	9.1	200J	u10
146	MA1300	5.0	30	400m	2.0m	80	24	200J	DO-7
147	MZL330	5	30	400m	500u	200	9.6	175J	DO35
148	RD30JB	5	30	400m	5.0m	200		175J	DO35
149	RD30JSB(A)	5.0	30.0	400m	5.0m	200		175J	DO34
150	Z5B30	5†	30	400m§	5.0m	80	10	200J	DO7
151	1N972A	10	30	400m	4.2m	49		175S	A398a
152	1N5545A	10	30	400m§	1.0m			175A	DO7
153	1S2300	10	30	400m	5.0m	95	9.0	150A	A1
154	1N972	20	30	400m	4.2m	49		175S	A398a
155	1N5545	20	30	400m§	1.0m			175A	DO7
156	05Z30		30	500m	5.0m	80		175J	DO35
157	GZA30		30	500m	5.0m	60 †	10	175J	A159
158	1N6011D	1	30	500m	5.0m	78		200J	DO35
159	Z0A30	1†	30	500m	5.0m	60 †	10	200J	DO29
160	1N6011C	2	30	500m	5.0m	78		200J	DO35
161	1N5256B	5	30	500m	4.2m	49	9.1	200A	A398a
162	1N5872B	5	30	500m	4.2m	117		150C	M859
163	1N6011B	5	30	500m	5.0m	78		200J	DO35
164	BZX46C30	5	30	500m	4.2m	49	12	175A	DO35
165	BZX55C30V	5	30	500m	5.0m	80	26mV	175J	DO35
166	BZX83C30	5	30	500m	5.0m	90	9.0	175A	DO35
167	BZX83C30V	5†	30	500m	5.0m	250	27mV	175J	DO35
168	BZY88C30V	5	30	500m	5.0m	95	26m	175	DO35
169	CTZ30A	5	30	500m	5.0m	480	1.2k	200	DO35
170	MLL5256B	5.0	30	500m§	4.2m	49	9.1	200J	F140
171	MTZ625,A	5†	30	.50	1.0m	81		175A	A60e
172	MZ330,A,B	5	30	500m	5.0m	80	8.7	175J	DO35
173	RD30EB	5	30	500m	5.0m	130	8.3	175J	DO35
174▼	SZP5-30-5-1	5.0	30	500m	1.0m			175	u5a
175▼	SZ.5-30-5-25	5.0	30	500m	25m			175	u5a
176	Z0B30	5†	30	500m	5.0m	60 †	10	200J	DO29
177	ZMM5256B	5.0	30	500m§	4.2m	49	9.1	200J	F139
178	ZPD30	5	30	500m	5.0m	80	9.0	175J	DO35
179	ZMM30	6†	30	500m	5.0m	80	9.0	175J	F135
180	BZX97C30	7	30	500m	5.0m	80	9.0	175J	DO35
181	BZV55C30	7.1	30	500m	2.0m	80	26	200J	F139
182	BZV60C30	7.1	30	500m	2.0m	80	26	200J	DO34
183	1N3421	10	30	.50	1.0m	320	8.2	200A	P5
184	1N5256A	10	30	500m	4.2m	49	9.1	200A	A398a
185	1N5872A	10	30	500m	4.2m	117		150C	M859
186	1N6011A	10	30	500m	5.0m	95		200J	DO35
187	CTZ30	10	30	500m	5.0m	480	1.2k	200	DO35
188	EQA01-30R	10	30	500m	5.0m	50	.08	125J	A387
189	MLL5256A	10	30	500m§	4.2m	49	9.1	200J	F140
190▼	SZP5-30-10-1	10	30	500m	1.0m			175	u5a
191▼	SZ.5-30-10-25	10	30	500m	25m			175	u5a
192	ZMM5256A	10	30	500m§	4.2m	49	9.1	200J	F139
193	1N5256	20†	30	.50	4.2m			200A	A398a
194	1N6011	20	30	500m	5.0m	95		200J	DO35
195	LL5256	20	30	500m	4.2m	49	9.1	200J	F139
196	MLL5256	20	30	500m§	4.2m	49		200J	F140
197▼	SZP5-30-20-1	20	30	500m	1.0m			175	u5a
198▼	SZ.5-30-20-25	20	30	500m	25m			175	u5a
199	ZMM5256	20	30	500m§	4.2m	49	9.1	200J	F139
200	ZPD30V	5†	30	550m	5.0m	250	27mV	175J	DO35
201	1N4643	5	30	.60	4.2m	1.0k	9.1	200A	DO14
202	1N3690B	5	30	750m	4.2m	49	8.5	175S	A1az
203	BZV41C30	5	30	750m	2.0m	80	8.0	175S	A412
204	MC6125,A	5†	30	.75	5.0m	81		175A	A2d
205	1N3690A	10	30	750m	4.2m	49	8.5	175S	A1az
206	1N3690	20	30	750m	4.2m	49	8.5	175S	A1az

SYMBOLS AND CODES EXPLAINED IN INTERPRETER

2. VOLTAGE REFERENCE DIODES - $V_Z \geq 24$ V (Cont'd)

IN ORDER OF: (1) REF. VOLTAGE (2) PD MAX (3) TOLERANCE & (4) TYPE NUMBER

LINE No.	4 TYPE No.	3 TOL ± (%)	1 NOM. REF. VOLT. (V)	2 PD @ 25°C MAX (W)	TEST CUR. Izt (A)	DYN. IMP. MAX (Ω)	TEMP. COEFF Tc MAX	TEMP MAX (°C)	DWG. NO.
1	HZ30PB		30	800m	10m	18		175J	DO41
2	DZB30		30	1.0	10m	30	25mV	150J	A298ap
3	GZB30		30	1.0		30	25mV		A298ap
4	GZB30C		30	1.0		30	25mV		A298ap
5	Z4A30	1†	30	1.0	10m	34	9.5	200J	DO29
6	1N1782A	5	30	1.0	15m	28		175A	DO13Ø
7	1N3031B	5	30	1.0		40	8.5	175A	A31a
8	1N4173B	5	30	1.0 §	8.5m	40		200S	DO29
9	1N4338B	5	30	1.0	8.5m	40	8.5	300S	DO7
10	1N4415B	5	30	1.0	8.5m	15			A1bc
11	1N4672	5	30	1.0	8.5m	750	9.1	200A	DO15
12	1N4751A	5	30	1.0	8.5m	40		200A	DO41
13	1N5574B	5	30	1.0 §	8.5m	40		200A	A60ac
14	AP30.0A,B	5†	30	1.0 †	4.2m	90			DO35
15	APD30.0A,B	5†	30	1.0 †	8.5m	40			A1rx
16	BZ300	5	30.0	1.0	10m	35	8.5	175J	DO41
17	BZV85C30	5	30	1.0	8.0m	45	27mV	200J	DO41
18	BZX78C30	5	30	1.0	10m	25	26mV	200J	
19	BZX85C30	5	30	1.0 §	8.0m	30	9.5	150A	DO41
20	CD4751	5	30	1.0	8.5m	40	9.1	200J	u39a
21	CH4751	5	30	1.0	8.5m	40	8.5	200J	u10
22	CZ30,A,B,D	5†	30	1.0	20m	32	8.5	175	DO15
23	MA2300	5	30	1.0	5.0m	25	26	200J	A415
24	PL30Z	5	30	1.0	25m	15	8.5	150J	
25	RD30P	5.0	30	1.0	5.0m	80	9.0	150J	M1008
26▼	SZ1-30-5-1	5.0	30	1.0	1.0m			175	u5b
27▼	SZ1-30-5-25								
		5.0	30	1.0	25m			175	u5b
28	TZB30B	5	30	1.0 §	1.0m		9.7	175A	A1ty
29	UZ8730	5	30	1.0	8.5m	40	9.0	175	A380
30	VR30,A,B	5†	30	1.0	8.5m	40		125A	A1b
31	Z4B30	5†	30	1.0	10m	34	9.5	200J	DO29
32	Z30.0	5†	30	1.0	10m	8.5 †	8.0	150A	DO41
33	ZB30	5†	30	1.0 §	8.5m	40		150A	A1bc
34	ZB30B	5	30	1.0	8.5m	40		100C	A1bc
35	ZM4751A	5.0	30	1.0 §	8.5m	40		200J	F139
36	AW08-30B	5.2	30	1.0	10m	15	8.3	175J	A60au
37	RD30FB	6	30	1.0	10m	18		175J	A297c
38	AW01-30	7	30	1.0	10m	15	8.3	150J	A333
39	AW08-30A	8.3	30	1.0	10m	15	8.3	175J	A60au
40	1N1782	10	30	1.0	15m	28		175A	DO13Ø
41	1N2387	10	30	1.0	8.0m	29	2.8	200J	A41e
42	1N3031A	10	30	1.0		40	8.5	175A	A31a
43	1N4173A	10	30	1.0 §	8.5m	40		200S	DO29
44	1N4338A	10	30	1.0	8.5m	40	8.5	300S	DO7
45	1N4415A	10	30	1.0	8.5m	15			A1bc
46	1N4751	10	30	1.0	8.5m	40		200A	DO41
47	1N5574A	10	30	1.0 §	8.5m	40		200A	A60ac
48	1S240	10	30	1.0	12m	30	8.3	150J	A56a
49	1Z30	10	30	1.0	10m	30	8.3	150J	DO15
50	EQB01-30	10	30	1.0	10m	40	.08	140J	A21b
51▼	SZ1-30-10-1								
		10	30	1.0	1.0m			175	u5b
52▼	SZ1-30-10-25								
		10	30	1.0	25m			175	u5b
53	TZB30A	10	30	1.0 §	1.0m		9.7	175A	A1ty
54	UZ8830	10	30	1.0	8.5m	40	9.0	175	A380
55	ZB30A	10	30	1.0	8.5m	40		100C	A1bc
56	ZM4751	10	30	1.0 §	8.5m	40		200J	F139
57	1N3031	20	30	1.0		40	8.5	175A	A31a
58	1N4173	20	30	1.0 §	8.5m	40		200S	DO29
59	1N4338	20	30	1.0	8.5m	40	8.5	300S	DO7
60	1N4415	20	30	1.0	8.5m	15		175S	A266a
61	1N5574	20	30	1.0 §	8.5m			200A	A60ac
62▼	SZ1-30-20-1								
		20	30	1.0	1.0m			175	u5b
63▼	SZ1-30-20-25								
		20	30	1.0	25m			175	u5b
64	1N4843B	5	30	1.2	8.3m	40	9.1	175	DO29
65	1N4843A	10	30	1.2	8.3m	40	9.1	175	DO29
66	1N4843	20	30	1.2	8.3m	40	9.1	175	DO29
67	BZX61C30	5	30	1.3	10m	40	7.0	175J	DO15
68	BZX85C30V	5†	30	1.3	8.0m	1.0k	23mV	175J	DO41
69	BZX87C30	5	30	1.3	10m	25	8.6	200J	A60al
70	BZY97C30	5	30	1.3	25m	15	11		A1rx
71	ZD30	5	30	1.3	25	15	7.0	150J	DO13
72	ZY30	5	30	1.3	25m	15	9.0	150J	A1bg
73	ZMY30	6	30	1.3	25m	20	9.5	200J	F149
74	BZD10C30	7	30	1.3	25m	15	11		DO13
75	BZW22C30	7	30	1.3	25m	20	11		DO41
76	ZPY30	13	30	1.3	25m	20	12	200J	DO41
77	1N5936D	1	30	1.5	12m	28		200J	DO41
78	1N5936C	2	30	1.5	12m	28		200J	DO41
79	1N3800B	5	30	1.5	12m	25	9.1	175S	C14Ø
80	1N4064	5	30	1.5	10m	50	.50	100	A1ss
81	1N4064A	5	30	1.5	10m	50	.20	100	A1ss
82	1N4476	5	30	1.5	8.5m	20		175A	A60y
83	1N5936B	5	30	1.5	12m	28		200J	DO41
84	1S4030,A	5†	30	1.5	10m	21	8.5	150A	DO1
85	BZY95C30	5	30	1.5	20m	22	8.3	175J	DO1
86	BZY97C30V	5†	30	1.5	25m	15	25mV	150J	A1bg
87	MC6325,A	5†	30	1.5	25m	70			A1q
88▼	SZ1.5-30-5-1								
		5.0	30	1.5	1.0m			175	u5b
89	1N3800A	10	30	1.5	12m	25	9.1	175S	C14Ø
90	1N5936A	10	30	1.5	12m	28		200J	DO41
91▼	SZ1.5-30-10-1								
		10	30	1.5	1.0m			175	u5b
92	1N3800	20	30	1.5	12m	25	9.1	175S	C14Ø
93	1N5936	20	30	1.5	12m	28		200J	DO41
94▼	SZ1.5-30-20-1								
		20	30	1.5	1.0m			175	u5b
95	2EZ30D5	5	30	2.0	16m	20		200J	A1ay
96	2VR30,A,B	5†	30	2.0	17m	30			A3e
97	BZV47C30	5	30	2.0	25m	15	8.5	175J	A344r
98	LMZ30A	5	30	2.0	16m	20	9.1	150A	DO41
99	ZBC30	5†	30	2.0 §	17m	15		150A	A1bc
100	ZBC30B	5	30	2.0	17	15			A1ty
101	2EZ30D10	10	30	2.0	16m	20		200J	A1ay
102	LMZ30	10	30	2.0	16m	20	9.1	150A	DO41
103	ZBC30A	10	30	2.0	17	15			A1ty
104	2EZ30D	20	30	2.0	16m	20		200J	A1ay
105	BZV15C30	5	30	2.2	500m	2.5	8.5	150J	M754Ø
106	Z7A30	1†	30	2.5	500m	2.5	9.5	200J	S457Ø
107	1N5035A	5	30	2.5	21m	15	8.5	150	A1gn
108	BZX70C30	5	30	2.5	20m	22	25mV	150J	A171b
109	Z2B30	5†	30	2.5	20m	25	9.5	200J	DO1
110	AU01-30	7	30	2.5	25m	15	9.1	165J	A333b
111	1N5035	10	30	2.5	21m	15	8.5	150	A1gn
112	3EZ30D1	1.0	30	3.0	25m	16		150J	A1ay
113	3EZ30D2	2.0	30	3.0	25m	16		150J	A1ay
114	3EZ30D3	3.0	30	3.0	25m	16		150J	A1ay
115	3EZ30D4	4.0	30	3.0	25	16		150J	A1ay
116	1N5077	5	30	3.0	25m	15		175A	A146u
117	3EZ30D5	5	30	3.0	25m	16		200J	A1ay
118	3T30,A,B	5†	30	3.0	30m	22		175C	A221
119	3VR30,A,B	5†	30	3.0	26m	20			A3al
120	BZV16C30	5	30	3.0	17m	40	8.5	175	DO3
121	MZ730	5	30	3.0	25m	15	9.0	175A	A146j
122	UDZ730	5	30	3.0	25m	15		175A	A356a
123	UZ730	5	30	3.0	25m	15	9.0	175A	A380
124	ZCC30	5†	30	3.0 §	25m	15		150A	A1ey
125	ZCC30B	5	30	3.0	25m	25			A1ey
126	3EZ30D10	10	30	3.0	25m	16		200J	A1ay
127	MZ830	10	30	3.0	25m	15	9.0	175A	A146j
128	UZ830	10	30	3.0	25m	15	9.0	175A	A380
129	ZCC30A	10	30	3.0	25m	25			A1ey
130	3EZ30D	20	30	3.0	25m	16		200J	A1ay
131	MZ930	20	30	3.0	25m	15	9.0	175A	A146j
132	UZ930	20	30	3.0	25m	15	9.0	175A	A380
133▼	BZT03/D30	10	30	3.2	25m	15	11	175J	A94g
134▼	SZ3-30-5-1	5.0	30	5.0	1.0m			175	u5c
135▼	SZ3-30-5-25								
		5.0	30	5.0	25m			175	u5c
136▼	SZ3-30-10-1								
		10	30	5.0	1.0m			175	u5c
137▼	SZ3-30-10-25								
		10	30	5.0	25m			175	u5c
138▼	SZ3-30-20-1								
		20	30	5.0	1.0m			175	u5c
139▼	SZ3-30-20-25								
		20	30	5.0	25m			175	u5c
140	RD29AN		30.1	250m	10m	150		175J	A277b
141	RD29BN		30.1	1.0	10m	28		150J	A427
142	RD29CN		30.1	3.0	30m	15		150J	A547
143	HZ33EB1	2.3	30.4	500m	5.0m	65		175J	DO35
144	RD30FB3		30.4	1.0	10m	18		175J	A277r
145	HZ30-3	2	30.9	400m	2.0m	100	28mV	175J	DO35
146	HZ30-3L	2	30.9	400m	500u	200	7.8	175J	DO35
147	RD30JSB3(A)								
		2.5	30.9	400m	5.0m	200	9.0	175J	DO34
148	HZ30H3	2	30.9	500m	2.0m	100	28mV	175J	DO35
149	ZS31	5†	31	750m	7.5m	75	500m	150A	C3h
150	1N1739	5	31	1.0	7.5m	100	80	150C	A69y
151	1N1739A	5	31	1.0	7.5m	100	40	150C	A69y
152	BZ310	5	31	1.0	10m	36	8.5	175J	A60t
153	RD33EB2		31.1	500m	5.0m	65		175J	A277b
154	RD33EL2		31.1	500m	1.0m	65		175J	A277b
155	HZ33EB2	2.4	31.1	500m	5.0m	65		175J	DO35
156	RD33FB1		31.1	1.0	10m	18		175J	A277r
157	RD33EL		31.3	500m	1.0m	65		175J	A277b
158	EQA01-32R	10	31.5	500m	5.0m	60	.08	125J	A387
159	EQB01-32	10	31.5	1.0	10m	50	.08	140J	A21b
160	RD33EB3		31.7	500m	5.0m	65		175J	A277b
161	RD33EL3		31.7	500m	1.0m	65		175J	A277b
162	HZ33EB3	2.4	31.7	500m	5.0m	65		175J	DO35
163	EQA02-32AC	8	31.7	500m	5.0m	80	.08	175J	A1ac
164	HZ33-1	2	31.9	400m	2.0m	120	30mV	175J	DO35
165	HZ33-1L	2	31.9	400m	500u	250	7.8	175J	DO35
166	RD33JSB1(A)								
		2.5	31.9	400m	5.0m	250	9.2	175J	DO34
167	HZ33H1	2	31.9	500m	2.0m	120	30mV	175J	DO35
168	ZTK33B		32		5.0m	12 †	0.5	150J	DO35
169	RD30EC	5	32	500m	5.0m	130	8.4	175J	DO35
170	HZ30PC		32	800m	10m	18		175J	DO41
171	BZ320	5	32.0	1.0	10m	38	8.5	175J	DO41
172	RD30FC	6	32	1.0	10m	18		175J	A297c
173	RD33FB2		32.2	1.0	10m	18		175J	A277r
174	RD35AL		32.3	250m	10m	250		175J	A277b
175	RD33EB4		32.3	500m	5.0m	65		175J	A277b
176	RD33EL4		32.3	500m	1.0m	65		175J	A277b
177	HZ33EB4	2.5	32.3	500m	5.0m	65		175J	DO35
178	RD35BL		32.3	1.0	10m	35		150J	A427
179	RD35CL		32.3	3.0	30m	20		150J	S547
180	3KZ36	10†	32.4	3.0 §	30m		.09		A3ak§
181	RD33JSB2(A)								
		2.5	32.8	400m	5.0m	250	9.2	175J	DO34
182	HZ33-2	2	32.9	400m	2.0m	120	30mV	175J	DO35
183	HZ33-2L	2	32.9	400m	500u	250	7.9	175J	DO35
184	RD36EB1		32.9	500m	5.0m	75		175J	A277b
185	RD36EL1		32.9	500m	1.0m	75		175J	A277b
186	HZ33H2	2	32.9	500m	2.0m	120	30mV	175J	DO35
187	TZPY33		33		25m	20	9.0		DO41
188	BZV49C33	5	33		5.0m	80	4.0	150J	M1008
189	CD4752A	5.0	33		7.5m	45		200	u52
190	CD5364B	5	33		40m	10	8.7	200J	u39b
191	MMBZ5257	5	33		3.8m	58			M500
192	NC33	5	33		2.0m	80	8.0		u47
193▼	TMPZ5257	5.0	33		3.8m	58			TO236Ø
194	DSZ3033	10	33		20m	21	9.0		A266
195	ZTK33	10	33		5m	12	.20	127J	TO18
196	1N1992B	1	33	150m	200u	300	9.8	150	C1
197	1N1992A	5	33	150m	200u	300	9.8	150	C1
198	MA3330	5	33	150m	2.0m	80	27	125J	M988
199	1N1992	10	33	150m	200u	300	9.8	150	C1
200	1N1938B	1	33	200m	200u	300	9.8	150A	A82e
201	1N1938A	5	33	200m	200u	300	9.8	150A	A82e
202	BZX84C33	5	33	200m	2.0m	80	9.0	150J	M500d
203	RD33MB	5.0	33	200m	2.0m	80		150J	M713b
204	1N1938	10	33	200m	200u	300	9.8	150A	A82e

SYMBOLS AND CODES EXPLAINED IN INTERPRETER

2. VOLTAGE REFERENCE DIODES - $V_Z \geq 24$ V (Cont'd)

IN ORDER OF: (1) REF. VOLTAGE (2) PD MAX (3) TOLERANCE & (4) TYPE NUMBER

LINE No.	4 TYPE No.	3 TOL ± (%)	1 NOM. REF. VOLT. (V)	2 PD @ 25°C MAX (W)	TEST CUR. Izt (A)	DYN. IMP. MAX (Ω)	TEMP. COEFF Tc MAX	TEMP MAX (°C)	DWG. NO.
1	PTC512	10	33	248m†	7.5m	45			A1bc
2	1N726A	5	33	250m	4.0m	50	9.0	175A	DO7
3	1N4121	5	33	.25	.25m	200		200J	DO7
4	1N4714	5	33	250m	50u			200A	DO14
5	BZX60C33	5	33	250m	2.0m	300	9.0	150A	DO7
6	1/4M33Z10	10†	33	250m	1.9m	85		175J	E204h
7	1N726	10	33	250m	4.0m	50	9.0	175A	DO7
8	1N726B	20	33	.25	4.0m	50			DO7
9	MC6026,A	5†	33	300m	1.0m	105		175	A2m
10	C5D5257	10	33	320m	3.8m			150S	M713a
11	BZX88C33	5	33	350m	5.0m	80	8.0	175J	A412
12	MA4330	5	33	370m	2.0m	80	27	200J	DO34
13	1N1965B	1	33	400m	200u	300	9.8	150	DO7
14	1N5546D	1	33	400m§	1.0m	100		175A	DO7
15	1N5748D	1	33	400m§	2.0m	90	8.8	200A	DO35
16	Z5A33	1†	33	400m§	5.0m	80	10	200J	DO7
17	1N5546C	2	33	400m§	1.0m	100		175A	DO7
18	1N5748C	2	33	400m§	2.0m	90	8.8	200A	DO35
19	BZX79B33	2	33	400m§	2.0m	80	29mV	200J	DO35
20	1N973B	5	33	400m	3.8m	58		175S	A398a
21	1N1965A	5	33	400m	200u	300	9.8	150	DO7
22	1N3530	5	33	400m	3.0m	50	10	200A	DO7
23	1N5546B	5	33	400m§	1.0m	100		175A	DO7
24	1N5748B	5	33	400m§	2.0m	90	8.8	200A	DO35
25	1S2330A	5	33	400m	5.0m	100	9.0	150A	A1
26	BZX79C33	5	33	400m§	2.0m	80	29mV	200J	DO35
27	BZX96C33	5	33	400m	5.0m	80	8.5	150J	DO7
28	BZY88C33	5	33	400m	5.0m	120	8.4	200J	DO7
29	CD973B	5	33	400m	3.8m	58	9.2	200J	u39a
30	CD5257B	5	33	400m	3.8m	58	9.2	200J	u39a
31	CH973	5	33	400m	3.8m	58	9.2	200J	u10
32	CH4121	5	33	400m	250u	200	9.5	200J	u10
33	CH5257	5	33	400m	3.8m	58	9.2	200J	u10
34	MA1330	5.0	33	400m	2.0m	80	27	200J	DO-7
35	MZL333	5	33	400m	500u	250	9.7	175J	DO35
36	RD33JB	5	33	400m	5.0m	250		175J	DO35
37	RD33JSB(A)	5.0	33.0	400m	5.0m	250		175J	DO34
38	Z5B33	5†	33	400m§	5.0m	80	10	200J	DO7
39	1N973A	10	33	400m	3.8m	58		175S	A398a
40	1N1965	10	33	400m	200u	300	9.8	150	DO7
41	1S2330	10	33	400m	5.0m	100	9.0	150A	A1
42	1N973	20	33	400m	3.8m	58		175S	A398a
43	05Z33		33	500m	5.0m	90		175J	DO35
44	GZA33		33	500m	5.0m	63 †	11	175J	A159
45	1N6012D	1	33	500m	5.0m	88		200J	DO35
46	Z0A33	1†	33	500m	5.0m	70 †	10	200J	DO29
47	1N6012C	2	33	500m	5.0m	88		200J	DO35
48	HZ36EB1	2.3	33	500m	5.0m	75		175J	DO35
49	1N5257B	5	33	500m	3.8m	58	9.2	200A	A398a
50	1N5873B	5	33	500m	3.8m	140		150C	M859
51	1N6012B	5	33	500m	5.0m	88		200J	DO35
52	BZX46C33	5	33	500m	3.8m	58	12	175A	DO35
53	BZX55C33V	5	33	500m	5.0m	80	29mV	175J	DO35
54	BZX83C33	5	33	500m	5.0m	90	9.0	175A	DO35
55	BZX83C33V	5†	33	500m	5.0m	250	29mV	175J	DO35
56	BZY88C33V	5	33	500m	5.0m	120	28m	175	DO35
57	CTZ33A	5	33	500m	5.0m	500	1.2k	200	DO35
58	MLL5257B	5.0	33	500m§	3.8m	58	9.2	200J	F140
59	MTZ626,A	5†	33	.50	1.0m	105		175A	A60e
60	MZ333,A,B	5	33	500m	5.0m	80	8.7	175J	DO35
61	RD33EB	5	33	500m	5.0m	160	8.4	175J	DO35
62▼	SZP5-33-5-1								
		5.0	33	500m	1.0m			175	u5a
63▼	SZ.5-33-5-25								
		5.0	33	500m	25m			175	u5a
64	Z0B33	5†	33	500m	5.0m	70 †	10	200J	DO29
65	ZMM5257B	5.0	33	500m§	3.8m	58	9.2	200J	F139
66	ZPD33	5	33	500m	5.0m	80	9.0	175J	DO35
67	BZX97C33	6	33	500m	5.0m	80	9.0	175J	DO35
68	ZMM33	6†	33	500m	5.0m	80	9.0	175J	F135
69	BZV55C33	6.4	33	500m	2.0m	80	29	200J	F139
70	BZV60C33	6.4	33	500m	2.0m	80	29	200J	DO34
71	1N3408	10	33	500m	3.0m	100	6.8	200S	P5
72	1N3422	10	33	.50	1.0m	360	8.0	200A	P5
73	1N5257A	10	33	500m	3.8m	58	9.2	200A	A398a
74	1N5873A	10	33	500m	3.8m	140		150C	M859
75	1N6012A	10	33	500m	5.0m	110		200J	DO35
76	CTZ33	10	33	500m	5.0m	500	1.2k	200	DO35
77	MLL5257A	10	33	500m§	3.8m	58	9.2	200J	F140
78▼	SZP5-33-10-1								
		10	33	500m	1.0m			175	u5a
79▼	SZ.5-33-10-25								
		10	33	500m	25m			175	u5a
80	ZMM5257A	10	33	500m§	3.8m	58	9.2	200J	F139
81	1N5257	20†	33	.50	3.8m			200A	A398a
82	1N6012	20	33	500m	5.0m	110		200J	DO35
83	MLL5257	20	33	500m§	3.8m	58		200J	F140
84▼	SZP5-33-20-1								
		20	33	500m	1.0m			175	u5a
85▼	SZ.5-33-20-25								
		20	33	500m	25m			175	u5a
86	ZMM5257	20	33	500m§	3.8m	58	9.2	200J	F139
87	ZPD33V	5†	33	550m	5.0m	250	29mV	175J	DO35
88	1N4644	5	33	.60	3.8m	1.0k	9.2	200A	DO14
89	MVS460	5	33	625m	5.0m	25	696m	150J	M859
90	1N3691B	5	33	750m	3.8m	58	8.5	175S	A1az
91	BZV41C33	5	33	750m	2.0m	80	8.0	175S	A412
92	MC6126,A	5†	33	.75	5.0m	105		175A	A2d
93	1N3691A	10	33	750m	3.8m	58	8.5	175S	A1az
94	1N3691	20	33	750m	3.8m	58	8.5	175S	A1az
95	HZ33PB		33	800m	10m	18		175J	DO41
96	1N1882B	1	33	1.0	8.0m	24 †	6.8	175A	DO13
97	Z4A33	1†	33	1.0	10m	36	10	200J	DO29
98	1N1783A	5	33	1.0	15m	33		175A	DO13Ø
99	1N1882A	5	33	1.0	8.0m	30	6.8	200C	A41e
100	1N3032B	5	33	1.0	7.5m	45		175A	A31a
101	1N4174B	5	33	1.0 §	7.5m	45		200S	DO29
102	1N4339B	5	33	1.0	7.5m	45	8.5	300S	DO7
103	1N4416B	5	33	1.0	7.5m	17	8.5	175A	A1cm
104	1N4673	5	33	1.0	7.5m	750	9.2	200A	DO15
105	1N4752A	5	33	1.0	7.5m	45		200A	DO41
106	1N5575B	5	33	1.0 §	7.5m	45		200A	A60ac
107	AP33.0A,B	5†	33	1.0 †	3.8m	90			DO35
108	APD33.0A,B	5†	33	1.0 †	7.5m	60			A1rx
109	BZ330	5	33.0	1.0	10m	40	8.5	175J	DO41
110	BZV85C33	5	33	1.0	8.0m	45	30mV	200J	DO41
111	BZX78C33	5	33	1.0	10m	30	30 V	200J	
112	BZX85C33	5	33	1.0 §	8.0m	35	9.5	150A	DO41
113	CD4752	5	33	1.0	7.5m	45	9.2	200J	u39a
114	CH4752	5	33	1.0	7.5m	45	8.5	200J	u10
115	CZ33,A,B,D	5†	33	1.0	10m	55	8.5	175	DO15
116	MA2330	5	33	1.0	5.0m	30	30	200J	A415
117	PL33Z	5	33	1.0	25m	15	8.5	150J	
118	PR252-RT	5	33	1.0	10m	36 †			DO7
119	RD33P	5.0	33	1.0	5.0m	80	9.2	150J	M1008
120▼	SZ1-33-5-1	5.0	33	1.0	1.0m			175	u5b
121▼	SZ1-33-5-25								
		5.0	33	1.0	25m			175	u5b
122	TZB33B	5	33	1.0 §	1.0m		9.8	175A	A1ty
123	UZ8733	5	33	1.0	7.5m	45	9.0	175	A380
124	VR33,A,B	5†	33	1.0	7.5m	45		125A	A1b
125	Z4B33	5†	33	1.0	10m	36	10	200J	DO29
126	Z33.0	5†	33	1.0	10m	11 †	8.0	150A	DO41
127	ZB33	5†	33	1.0 §	7.5m	45		150A	A1bc
128	ZB33B	5	33	1.0	7.5m	45		100C	A1bc
129	ZM4752A	5.0	33	1.0 §	7.5m	45		200J	F139
130	AW08-33B	5.4	33	1.0	10m	15	8.4	175J	A60au
131	AW01-33	6	33	1.0	10m	15	8.4	150J	A333
132	RD33FB	6	33	1.0	10m	18		175J	A297c
133	AW08-33A	8.1	33	1.0	10m	15	8.4	175J	A60au
134	1N1783	10	33	1.0	15m	33		175A	DO13Ø
135	1N1882	10	33	1.0	8.0m	30	6.8	200C	A41e
136	1N3032A	10	33	1.0	7.5m	45		175A	A31a
137	1N4174A	10	33	1.0 §	7.5m	45		200S	DO29
138	1N4339A	10	33	1.0	7.5m	45	8.5	300S	DO7
139	1N4416A	10	33	1.0	7.5m	17	8.5	175A	A1cm
140	1N4752	10	33	1.0	7.5m	45		200A	DO41
141	1N5575A	10	33	1.0 §	7.5m	45		200A	A60ac
142	1S241	10	33	1.0	10m	40	8.8	150J	A56a
143	1Z33	10	33	1.0	10m	30		150J	DO15
144▼	SZ1-33-10-1								
		10	33	1.0	1.0m			175	u5b
145▼	SZ1-33-10-25								
		10	33	1.0	25m			175	u5b
146	TZB33A	10	33	1.0 §	1.0m		9.8	175A	A1ty
147	UZ8833	10	33	1.0	7.5m	45	9.0	175	A380
148	ZB33A	10	33	1.0	7.5m	45		100C	A1bc
149	ZM4752	10	33	1.0 §	7.5m	45		200J	F139
150	1N3032	20	33	1.0	7.5m	45		175A	A31a
151	1N4174	20	33	1.0 §	7.5m	45		200S	DO29
152	1N4339	20	33	1.0	7.5m	45	8.5	300S	DO7
153	1N4416	20	33	1.0	7.5m	17		175S	A266a
154	1N5575	20	33	1.0 §	7.5m			200A	A60ac
155▼	SZ1-33-20-1								
		20	33	1.0	1.0m			175	u5b
156▼	SZ1-33-20-25								
		20	33	1.0	25m			175	u5b
157	1N4844B	5	33	1.2	7.5m	45	9.2	175	DO29
158	1N4844A	10	33	1.2	7.5m	45	9.2	175	DO29
159	1N4844	20	33	1.2	7.5m	45	9.2	175	DO29
160	BZX61C33	5	33	1.3	10m	45	7.0	175J	DO15
161	BZX85C33V	5†	33	1.3	8.0m	1.0k	25mV	175J	DO41
162	BZX87C33	5	33	1.3	10m	30	9.0	200J	A60al
163	BZY97C33	5	33	1.3	25m	15	11		A1rx
164	ZD33	5	33	1.3	25	15	7.0	150J	DO13
165	ZY33	5	33	1.3	25m	15	9.0	150J	A1bg
166	BZD10C33	6	33	1.3	25m	15	11		DO13
167	BZW22C33	6	33	1.3	25m	20	11		DO41
168	ZMY33	6	33	1.3	25m	20	9.5	200J	F149
169	ZPY33	12	33	1.3	25m	20	12	200J	DO41
170	1N5937D	1	33	1.5	11m	33		200J	DO41
171	1N5937C	2	33	1.5	11m	33		200J	DO41
172	1N3801B	5	33	1.5	11m	30	9.2	175S	C14Ø
173	1N4065	5	33	1.5	10m	55	.50	100	A1ss
174	1N4065A	5	33	1.5	10m	55	.20	100	A1ss
175	1N4477	5	33	1.5	7.5m	25		175A	A60y
176	1N5937B	5	33	1.5	11m	33		200J	DO41
177	1S4033,A	5†	33	1.5	10m	24	8.5	150A	DO1
178	BZY95C33	5	33	1.5	20m	25	9.0	175J	DO1
179	BZY97C33V	5†	33	1.5	25m	15	28mV	150J	A1bg
180	MC6326,A	5†	33	1.5	25m	90			A1q
181▼	SZ1.5-33-5-1								
		5.0	33	1.5	1.0m			175	u5b
182	1N3801A	10	33	1.5	11m	30	9.2	175S	C14Ø
183	1N5937A	10	33	1.5	11m	33		200J	DO41
184▼	SZ1.5-33-10-1								
		10	33	1.5	1.0m			175	u5b
185	1N3801	20	33	1.5	11m	30	9.2	175S	C14Ø
186	1N5937	20	33	1.5	11m	33		200J	DO41
187▼	SZ1.5-33-20-1								
		20	33	1.5	1.0m			175	u5b
188	2EZ33D5	5	33	2.0	15m	23		200J	A1ay
189	2VR33,A,B	5†	33	2.0	15m	40			A3e
190	BZV47C33	5	33	2.0	25m	15	8.5	175J	A344r
191	LMZ33A	5	33	2.0	15m	22	9.2	150A	DO41
192	ZBC33	5†	33	2.0 §	15m	21		150A	A1bc
193	ZBC33B	5	33	2.0	15	21			A1ty
194	2EZ33D10	10	33	2.0	15m	23		200J	A1ay
195	LMZ33	10	33	2.0	15m	22	9.2	150A	DO41
196	ZBC33A	10	33	2.0	15	21			A1ty
197	2EZ33D	20	33	2.0	15m	23		200J	A1ay
198	BZV15C33	5	33	2.2	500m	3.0	8.8	150J	M754Ø
199	Z7A33	1†	33	2.5	500m	3.0	10	200J	S457Ø
200	1N5036A	5	33	2.5	19m	18	8.5	150	A1gn
201	BZX70C33	5	33	2.5	20m	25	30mV	150J	A171b
202	Z2B33	5†	33	2.5	20m	30	10	200J	DO1
203	AU01-33	6	33	2.5	25m	15	9.2	165J	A333b
204	1N5036	10	33	2.5	19m	18	8.5	150	A1gn
205	3EZ33D1	1.0	33	3.0	23m	20		150J	A1ay
206	3EZ33D2	2.0	33	3.0	23m	20		150J	A1ay

SYMBOLS AND CODES EXPLAINED IN INTERPRETER

2. VOLTAGE REFERENCE DIODES - $V_Z \geq 24$ V (Cont'd)

IN ORDER OF: (1) REF. VOLTAGE (2) PD MAX (3) TOLERANCE & (4) TYPE NUMBER

LINE No.	4 TYPE No.	3 TOL ± (%)	1 NOM. REF. VOLT. (V)	2 PD @ 25°C MAX (W)	TEST CUR. Izt (A)	DYN. IMP. MAX (Ω)	TEMP. COEFF Tc MAX	TEMP MAX (°C)	DWG. NO.
1	3EZ33D3	3.0	33	3.0	23m	20		150J	A1ay
2	3EZ33D4	4.0	33	3.0	23	20		150J	A1ay
3	1N5078	5	33	3.0	20m	21		175A	A146u
4	3EZ33D5	5	33	3.0	23m	20		200J	A1ay
5	3VR33,A,B	5†	33	3.0	22m	22			A3al
6	BZV16C33	5	33	3.0	15m	45	8.5	175	DO3
7	MZ733	5	33	3.0	20m	21	9.0	175A	A146j
8	UDZ733	5	33	3.0	20m	21		175A	A356a
9	UZ733	5	33	3.0	20m	21	9.0	175A	A380
10	ZCC33	5†	33	3.0 §	20m	21		150A	A1ey
11	ZCC33B	5	33	3.0	20m	21			A1ey
12	1N4503	10	33	3.0	20m	21		175S	A146f
13	3EZ33D10	10	33	3.0	23m	20		200J	A1ay
14	MZ833	10	33	3.0	20m	21	9.0	175A	A146j
15	UZ833	10	33	3.0	20m	21	9.0	175A	A380
16	ZCC33A	10	33	3.0	20m	21			A1ey
17	3EZ33D	20	33	3.0	23m	20		200J	A1ay
18	MZ933	20	33	3.0	20m	21	9.0	175A	A146j
19	UZ933	20	33	3.0	20m	21	9.0	175A	A380
20▼	BZT03/D33	10	33	3.2	25m	15	11	175J	A94g
21	3T33,A,B	5†	33	3.5	15m	33			DO4
22▼	SZ3-33-5-1	5.0	33	5.0	1.0m			175	u5c
23▼	SZ3-33-5-25	5.0	33	5.0	25m			175	u5c
24▼	SZ3-33-10-1	10	33	5.0	1.0m			175	u5c
25▼	SZ3-33-10-25	10	33	5.0	25m			175	u5c
26▼	SZ3-33-20-1	20	33	5.0	1.0m			175	u5c
27▼	SZ3-33-20-25	20	33	5.0	25m			175	u5c
28	RD33FB3		33.2	1.0	10m	18		175J	A277r
29	EQA01-33R	10	33.5	500m	5.0m	70	.08	125J	A387
30	EQB01-33	10	33.5	1.0	10m	50	.08	140J	A21b
31	PS1504	5	33.6	.25	10m	60	.20	150A	A1gc
32	PS1504A	5	33.6	.25	10m	60	.10	150A	A1gc
33	RD36EB2		33.6	500m	5.0m	75		175J	A277b
34	RD36EL2		33.6	500m	1.0m	75		175J	A277b
35	HZ36EB2	2.4	33.6	500m	5.0m	75		175J	DO35
36	HZ33-3	2	33.9	400m	2.0m	120	30mV	175J	DO35
37	HZ33-3L	2	33.9	400m	500u	250	7.9	175J	DO35
38	RD33JSB3(A)	2.5	33.9	400m	5.0m	250	9.2	175J	DO34
39	RD36EL		33.9	500m	1.0m	75		175J	A277b
40	HZ33H3	2	33.9	500m	2.0m	120	30mV	175J	DO35
41	ZTK33C		34		5.0m	12 †	0.5	150J	DO35
42	1N2769	5	34		7.5m	100	.50	175A	A1jh
43	1N2769A	5	34		7.5m	100	.25	175A	A1jh
44	RD36FB1		34.0	1.0	10m	20		175J	A277r
45	BZ340	5	34.0	1.0	10m	41	8.5	175J	DO41
46	RD36EB3		34.2	500m	5.0m	75		175J	A277b
47	RD36EL3		34.2	500m	1.0m	75		175J	A277b
48	HZ36EB3	2.4	34.3	500m	5.0m	75		175J	DO35
49	1N1320A	5	34.5	150m	200u			150A	C1
50	1N1320	10	34.5	150m	200u			150A	C1
51	PS6320,A	15†	34.5	.50	.20m				DO14
52	RD35AM		34.7	250m	10m	250		175J	A277b
53	RD36EB4		34.8	500m	5.0m	75		175J	A277b
54	RD36EL4		34.8	500m	1.0m	75		175J	A277b
55	05Z36X	10	34.8	500m	5.0m	90	.11	175J	
56	HZ36-1	2	34.9	400m	2.0m	140	32mV	175J	DO35
57	HZ36-1L	2	34.9	400m	500u	300	7.9	175J	DO35
58	RD36JSB1(A)	2.5	34.9	400m	5.0m	300		175J	DO34
59	HZ36H1	2	34.9	500m	2.0m	140	32mV	175J	DO35
60	HZ36EB4	2.4	34.9	500m	5.0m	75		175J	DO35
61	HZT33		35	200m		25	1.0	75A	DO35
62	RD33EC	5	35	500m	5.0m	160	8.5	175J	DO35
63	HZ33PC		35	800m	10m	18		175J	DO41
64	RD35BK		35.0	1.0	10m	35		150J	A427
65	RD35BM		35.0	1.0	10m	35		150J	A427
66	BZ350	5	35.0	1.0	10m	43	8.5	175J	DO41
67	RD33FC	5	35	1.0	10m	18		175J	A297c
68	RD35CK		35.0	3.0	30m	20		150J	S547
69	RD35CM		35.0	3.0	30m	20		150J	S547
70	RD36FB2		35.1	1.0	10m	20		175J	A277r
71	3KZ39	10†	35.1	3.0 §	30m		.09		A3ak§
72	RD39EB1		35.5	500m	5.0m	85		175J	A277b
73	RD39EL1		35.5	500m	1.0m	85		175J	A277b
74	EQA01-35R	9	35.5	500m	5.0m	80	.08	125J	A387
75	EQB01-35	10	35.5	1.0	10m	50	.08	140J	A21b
76	HZ39EB1	2.3	35.6	500m	5.0m	85		175J	DO35
77	RD36JSB2(A)	2.5	35.9	400m	5.0m	300		175J	DO34

$V_Z \geq 36$ V

LINE No.	4 TYPE No.	3 TOL ± (%)	1 NOM. REF. VOLT. (V)	2 PD @ 25°C MAX (W)	TEST CUR. Izt (A)	DYN. IMP. MAX (Ω)	TEMP. COEFF Tc MAX	TEMP MAX (°C)	DWG. NO.
81	TZPY36		36		10m	60	9.0		DO41
82	BZV49C36	5	36		5.0m	90	4.0	150J	M1008
83	CD4753A	5.0	36		7.0m	50		200	u52
84	CD5365B	5	36		30m	11	8.8	200J	u39b
85	NC36	5	36		2.0m	90	8.0		u47
86	DSZ3036	10	36		20m	21	9.0		A266
87	MA3360	5	36	150m	2.0m	90	30	125J	M988
88	BZX84C36	5	36	200m	2.0m	90	9.1	150J	M500d
89	RD36MB	5.0	36	200m	2.0m	90		150J	M713b
90	RD35AK		36.0	250m	10m	250		175J	A277b
91	1N727A	5	36	250m	4.0m	60	9.1	175A	DO7
92	1N4122	5	36	.25	.25m	200		200J	DO7
93	1N4715	5	36	.25	.05m			200A	DO14
94	BZX60C36	5	36	250m	2.0m	350	9.0	150A	DO7
95	1/4M36Z10	10†	36	250m	1.7m	100		175J	E204h
96	1N727	10	36	250m	4.0m	60	9.1	175A	DO7
97	1N727B	20	36	.25	4.0m	60			DO7
98	MC6027,A	5†	36	.30	1.0m	122		175	A2m
99	BZX88C36	5	36	350m	5.0m	90	8.0	175J	A412
100	MA4360	5	36	370m	2.0m	90	30	200J	DO34
101	1N5749D	1	36	400m§	2.0m	90	8.6	200A	DO35
102	1N5749C	2	36	400m§	2.0m	90	8.6	200A	DO35
103	BZX79B36	2	36	400m§	2.0m	90	33mV	200J	DO35
104	HZ36-2	2	36.0	400m	2.0m	140	32mV	175J	DO35
105	HZ36-2L	2	36.0	400m	500u	300	8.0	175J	DO35
106	1N974B	5	36	400m	3.4m	70		175S	A398a
107	1N3531	5	36	.40	3.0m	75	10	200A	DO7
108	1N5749B	5	36	400m§	2.0m	90	8.6	200A	DO35
109	BZX79C36	5	36	400m§	2.0m	90	33mV	200J	DO35
110	CD974B	5	36	400m	3.4m	70	9.3	200J	u39a
111	CD5258B	5	36	400m	3.4m	70	9.3	200J	u39a
112	CH974	5	36	400m	3.4m	70	9.3	200J	u10
113	CH4122	5	36	400m	250u	200	9.5	200J	u10
114	CH5258	5	36	400m	3.4m	70	9.3	200J	u10
115	MA1360	5.0	36	400m	2.0m	90	30	200J	DO-7
116	MZL336	5	36	400m	500u	300	9.8	175J	DO35
117	RD36JB	5	36	400m	5.0m	300		175J	DO35
118	RD36JSB(A)	5.0	36.0	400m	5.0m	300		175J	DO34
119	1N974A	10	36	400m	3.4m	70		175S	A398a
120	1N974	20	36	400m	3.4m	70		175S	A398a
121	05Z36		36	500m	5.0m	90		175J	DO35
122	GZA36		36	500m	5.0m	70 †	11	175J	A159
123	1N6013D	1	36	500m	5.0m	95		200J	DO35
124	1N6013C	2	36	500m	5.0m	95		200J	DO35
125	HZ36H2	2	36	500m	2.0m	140	32mV	175J	DO35
126	1N5258B	5	36	500m	3.4m	70	9.3	200A	A398a
127	1N5874B	5	36	500m	3.4m	160		150C	M859
128	1N6013B	5	36	500m	5.0m	95		200J	DO35
129	BZX46C36	5	36	500m	3.4m	70	12	175A	DO35
130	BZX55C36	5	36	500m	5.0m	80	9.0	175A	DO35
131	BZX83C36	5	36	500m	5.0m	90	9.0	175A	DO35
132	BZX97C36	5	36	500m	5.0m	90	8.0	175J	DO35
133	CTZ36A	5	36	500m	5.0m	750	1.2k	200	DO35
134	MLL5258B	5.0	36	500m§	3.4m	70	9.3	200J	F140
135	MTZ627,A	5†	36	.50	1.0m	122		175A	A60e
136	MZ336,A,B	5	36	500m	5.0m	90	8.7	175J	DO35
137	RD36EB	5	36	500m	5.0m	200	8.6	175J	DO35
138▼	SZP5-36-5-1	5.0	36	500m	1.0m			175	u5a
139▼	SZ.5-36-5-25	5.0	36	500m	25m			175	u5a
140	ZMM36	5†	36	500m	5.0m	90	9.0	175J	F135
141	ZPD36	5	36	500m	5.0m	80	9.0	175J	DO35
142	BZV55C36	5.8	36	500m	2.0m	90	33	200J	F139
143	BZV60C36	5.8	36	500m	2.0m	90	33	200J	DO34
144	1N5258A	10	36	500m	3.4m	70	9.3	200A	A398a
145	1N5874A	10	36	500m	3.4m	160		150C	M859
146	1N6013A	10	36	500m	5.0m	130		200J	DO35
147	05Z36Y	10	36	500m	5.0m	90	.11	175J	
148	CTZ36	10	36	500m	5.0m	750	1.2k	200	DO35
149	MLL5258A	10	36	500m§	3.4m	70	9.3	200J	F140
150▼	SZP5-36-10-1	10	36	500m	1.0m			175	u5a
151▼	SZ.5-36-10-25	10	36	500m	25m			175	u5a
152	1N5258	20†	36	.50	3.4m			200A	A398a
153	1N6013	20	36	500m	5.0m	130		200J	DO35
154	MLL5258	20	36	500m§	3.4m	70		200J	F140
155▼	SZP5-36-20-1	20	36	500m	1.0m			175	u5a
156▼	SZ.5-36-20-25	20	36	500m	25m			175	u5a
157	1N4645	5	36	.60	3.4m	1.0k	9.3	200A	DO14
158	1N3692B	5	36	750m	3.4m	70	8.5	175S	A1az
159	BZV41C36	5	36	750m	2.0m	90	8.0	175S	A412
160	MC6127,A	5†	36	.75	5.0m	122		175A	A2d
161	1N3692A	10	36	750m	3.4m	70	8.5	175S	A1az
162	1N3692	20	36	750m	3.4m	70	8.5	175S	A1az
163	HZ36PB		36	800m	10m	20		175J	DO41
164	Z4A36	1†	36	1.0	10m	38	10	200J	DO29
165	1N1784A	5	36	1.0	15m	39		175A	DO13Ø
166	1N3033B	5	36	1.0	7.0m	50		175A	A31a
167	1N4175B	5	36	1.0 §	7.0m	50		200S	DO29
168	1N4340B	5	36	1.0	7.0m	50	8.5	300S	DO7
169	1N4417B	5	36	1.0	7.0m	19	8.5	175A	A1cm
170	1N4674	5	36	1.0	7.0m	750	9.3	200A	DO15
171	1N4753A	5	36	1.0	7.0m	50		200A	DO41
172	1N5576B	5	36	1.0 §	7.0m	50		200A	A60ac
173	AP36.0A,B	5†	36	1.0 †	3.4m	90			DO35
174	APD36.0A,B	5†	36	1.0 †	7.0m	60			A1rx
175	BZV85C36	5	36	1.0	8.0m	50	34mV	200J	DO41
176	BZX78C36	5	36	1.0	10m	35	33mV	200J	
177	BZX85C36	5	36	1.0 §	8.0m	40	9.5	150A	DO41
178	CD4753	5	36	1.0	7.0m	50	9.3	200J	u39a
179	CH4753	5	36	1.0	7.0m	50	8.5	200J	u10
180	MA2360	5	36	1.0	5.0m	30	33	200J	A415
181	PL36Z	5	36	1.0	10m	40	9.0	150J	
182	RD36FB	5	36	1.0	10m	20		175J	A297c
183	RD36P	5.0	36	1.0	5.0m	90	9.4	150J	M1008
184▼	SZ1-36-5-1	5.0	36	1.0	1.0m			175	u5b
185▼	SZ1-36-5-25	5.0	36	1.0	25m			175	u5b
186	TZB36B	5	36	1.0 §	1.0m		9.9	175A	A1ty
187	UZ8736	5	36	1.0	7.0m	50	9.0	175	A380
188	VR36,A,B	5†	36	1.0	7.0m	50		125A	A1b
189	Z4B36	5†	36	1.0	10m	38	10	200J	DO29
190	ZB36	5†	36	1.0 §	7.0m	50		150A	A1bc
191	ZB36B	5	36	1.0	7.0m	50		100C	A1bc
192	1N1784	10	36	1.0	15m	39		175A	DO13Ø
193	1N3033A	10	36	1.0	7.0m	50		175A	A31a
194	1N4175A	10	36	1.0 §	7.0m	50		200S	DO29
195	1N4340A	10	36	1.0	7.0m	50	8.5	300S	DO7
196	1N4417A	10	36	1.0	7.0m	19	8.5	175A	A1cm
197	1N4753	10	36	1.0	7.0m	50		200A	DO41
198	1N5576A	10	36	1.0 §	7.0m	50		200A	A60ac
199	1S242	10	36	1.0	10m	40	8.9	150J	A56a
200▼	SZ1-36-10-1	10	36	1.0	1.0m			175	u5b
201▼	SZ1-36-10-25	10	36	1.0	25m			175	u5b
202	TZB36A	10	36	1.0 §	1.0m		9.9	175A	A1ty
203	UZ8836	10	36	1.0	7.0m	50	9.0	175	A380

2. VOLTAGE REFERENCE DIODES - $V_Z \geq 24$ V (Cont'd)

IN ORDER OF: (1) REF. VOLTAGE (2) PD MAX (3) TOLERANCE & (4) TYPE NUMBER

LINE No.	4 TYPE No.	3 TOL ± (%)	1 NOM. REF. VOLT. (V)	2 PD @ 25°C MAX (W)	TEST CUR. Izt (A)	DYN. IMP. MAX (Ω)	TEMP. COEFF Tc MAX	TEMP MAX (°C)	DWG. NO.
1	ZB36A	10	36	1.0	7.0m	50		100C	A1bc
2	1N3033	20	36	1.0	7.0m	50		175A	A31a
3	1N4175	20	36	1.0 §	7.0m	50		200S	DO29
4	1N4340	20	36	1.0	7.0m	50	8.5	300S	DO7
5	1N4417	20	36	1.0	7.0m	19		175S	A266a
6	1N5576	20	36	1.0 §	7.0m			200A	A60ac
7▼	SZ1-36-20-1								
		20	36	1.0	1.0m			175	u5b
8▼	SZ1-36-20-25								
		20	36	1.0	25m			175	u5b
9	1N4845B	5	36	1.2	7.0m	5.0	9.3	175	DO29
10	1N4845A	10	36	1.2	7.0m	5.0	9.3	175	DO29
11	1N4845	20	36	1.2	7.0m	5.0	9.3	175	DO29
12	BZX61C36	5	36	1.3	10m	50	7.0	175J	DO15
13	BZX87C36	5	36	1.3	10m	35	9.1	200J	A60al
14	BZY97C36	5	36	1.3	10m	40	11		A1rx
15	ZD36	5	36	1.3	10	40	8.0	150J	DO13
16	ZY36	5	36	1.3	10m	40	10	150J	A1bg
17	BZD10C36	6	36	1.3	10m	40	11		DO13
18	BZW22C36	6	36	1.3	10m	60	11		DO41
19	ZMY36	6	36	1.3	10m	60	9.5	200J	F149
20	ZPY36	11	36	1.3	10m	60	12	200J	DO41
21	1N5938D	1	36	1.5	10m	38		200J	DO41
22	1N5938C	2	36	1.5	10m	38		200J	DO41
23	1N3802B	5	36	1.5	10m	35	9.3	175S	C14⊠
24	1N4478	5	36	1.5	7.0m	27		175A	A60y
25	1N5938B	5	36	1.5	10m	38		200J	DO41
26	1S4036,A	5†	36	1.5	10m	27	8.5	150A	DO1
27	BZY95C36	5	36	1.5	20m	30	8.8	175J	DO1
28	BZY97C36V	5†	36	1.5	10m	40	30mV	150J	A1bg
29	MC6327,A	5†	36	1.5	25m	100			A1q
30▼	SZ1.5-36-5-1								
		5.0	36	1.5	1.0m			175	u5b
31	1N3802A	10	36	1.5	10m	35	9.3	175S	C14⊠
32	1N5938A	10	36	1.5	10m	38		200J	DO41
33▼	SZ1.5-36-10-1								
		10	36	1.5	1.0m			175	u5b
34	1N3802	20	36	1.5	10m	35	9.3	175S	C14⊠
35	1N5938	20	36	1.5	10m	38		200J	DO41
36▼	SZ1.5-36-20-1								
		20	36	1.5	1.0m			175	u5b
37	2EZ36D5	5	36	2.0	13m	25		200J	A1ay
38	2VR36,A,B	5†	36	2.0	14m	45			A3e
39	BZV47C36	5	36	2.0	10m	40	8.5	175J	A344r
40	LMZ36A	5	36	2.0	14m	25	9.3	150A	DO41
41	ZBC36	5†	36	2.0 §	14m	21		150A	A1bc
42	ZBC36B	5	36	2.0	14	21			A1ty
43	2EZ36D10	10	36	2.0	13m	25		200J	A1ay
44	LMZ36	10	36	2.0	14m	25	9.3	150A	DO41
45	ZBC36A	10	36	2.0	14	21			A1ty
46	2EZ36D	20	36	2.0	13m	25		200J	A1ay
47	BZV15C36	5	36	2.2	200m	4.0	9.0	150J	M754⊠
48	Z7A36	1†	36	2.5	200m	4.0	10	200J	S457⊠
49	1N5037A	5	36	2.5	17m	21	8.5	150	A1gn
50	BZX70C36	5	36	2.5	20m	30	32mV	150J	A171b
51	Z2B36	5†	36	2.5	20m	35	10	200J	DO1
52	1N5037	10	36	2.5	17m	21	8.5	150	A1gn
53	3EZ36D1	1.0	36	3.0	21m	22		150J	A1ay
54	3EZ36D2	2.0	36	3.0	21m	22		150J	A1ay
55	3EZ36D3	3.0	36	3.0	21m	22		150J	A1ay
56	3EZ36D4	4.0	36	3.0	21	22		150J	A1ay
57	1N5079	5	36	3.0	20m	21		175A	A146u
58	3EZ36D5	5	36	3.0	21m	22		200J	A1ay
59	3VR36,A,B	5†	36	3.0	21m	25			A3al
60	BZV16C36	5	36	3.0	14m	50	8.5	175	DO3
61	MZ736	5	36	3.0	20m	21	9.0	175A	A146j
62	UDZ736	5	36	3.0	20m	21		175A	A356a
63	UZ736	5	36	3.0	20m	21	9.0	175A	A380
64	ZCC36	5†	36	3.0 §	20m	21		150A	A1ey
65	ZCC36B	5	36	3.0	20m	21			A1ey
66	1N4882	10	36	3.0	20m	21		175A	A60n
67	3EZ36D10	10	36	3.0	21m	22		200J	A1ay
68	MZ836	10	36	3.0	20m	21	9.0	175A	A146j
69	UZ836	10	36	3.0	20m	21	9.0	175A	A380
70	ZCC36A	10	36	3.0	20m	21			A1ey
71	3EZ36D	20	36	3.0	21m	22		200J	A1ay
72	MZ936	20	36	3.0	20m	21	9.0	175A	A146j
73	UZ936	20	36	3.0	20m	21	9.0	175A	A380
74▼	BZT03/D36	10	36	3.2	10m	40	11	175J	A94g
75	3T36,A,B	5†	36	3.5	15m	39			DO4
76▼	SZ3-36-5-1	5.0	36	5.0	1.0m			175	u5c
77▼	SZ3-36-5-25								
		5.0	36	5.0	25m			175	u5c
78▼	SZ3-36-10-1								
		10	36	5.0	1.0m			175	u5c
79▼	SZ3-36-10-25								
		10	36	5.0	25m			175	u5c
80▼	SZ3-36-20-1								
		20	36	5.0	1.0m			175	u5c
81▼	SZ3-36-20-25								
		20	36	5.0	25m			175	u5c
82	RD36FB3		36.1	1.0	10m	20		175J	A277r
83	RD39EB2		36.2	500m	5.0m	85		175J	A277b
84	RD39EL2		36.2	500m	1.0m	85		175J	A277b
85	HZ39EB2	2.3	36.3	400m	5.0m	85		200J	A380d
86	HZ39EB3	2.4	36.9	400m	5.0m	85		200J	A380d
87	RD36JSB3(A)								
		2.5	36.9	400m	5.0m	300		175J	DO34
88	RD39EB3		36.9	500m	5.0m	85		175J	A277b
89	RD39EL3		36.9	500m	1.0m	85		175J	A277b
90	1N728B	20	37	.25	4.0m	70			DO7
91	RD39FB1		37.0	1.0	10m	20		175J	A277r
92	1N4066	5	37	1.5	7.5m	80	.50	100	A1ss
93	1N4066A	5	37	1.5	7.5m	80	.20	100	A1ss
94	05Z36Z	10	37.1	500m	5.0m	90	.11	175J	
95	RD35AN		37.2	250m	10m	250		175J	A277b
96	HZ36-3	2	37.2	400m	2.0m	140	32mV	175J	DO35
97	HZ36-3L	2	37.2	400m	500u	300	8.0	175J	DO35
98	HZ36H3	2	37.2	500m	2.0m	140	32mV	175J	DO35
99	ZS37	5†	37.2	750m	7.5m	90	500m	150A	C3h

LINE No.	4 TYPE No.	3 TOL ± (%)	1 NOM. REF. VOLT. (V)	2 PD @ 25°C MAX (W)	TEST CUR. Izt (A)	DYN. IMP. MAX (Ω)	TEMP. COEFF Tc MAX	TEMP MAX (°C)	DWG. NO.
100	1N1740	5	37.2	1.2	7.5m	120	80	150C	A69y
101	1N1740A	5	37.2	1.2	7.5m	120	40	150C	A69y
102	RD39EB4		37.5	500m	5.0m	85		175J	A277b
103	RD39EL4		37.5	500m	1.0m	85		175J	A277b
104	HZ39EB4	2.4	37.6	400m	5.0m	85		200J	A380d
105	RD39EL		37.7	500m	1.0m	85		175J	A277b
106	RD39JSB1(A)								
		2.5	37.9	400m	5.0m	360		175J	DO34
107	RD36EC	5	38	500m	5.0m	200	8.7	175J	DO35
108	HZ36PC		38	800m	10m	20		175J	DO41
109	RD35BN		38.0	1.0	10m	35		150J	A427
110	RD39FB2		38.0	1.0	10m	20		175J	A277r
111	RD36FC	5	38	1.0	10m	20		175J	A297c
112	RD35CN		38.0	3.0	30m	20		150J	S547
113	RD39EC1		38.3	500m	5.0m	85		175J	A277b
114	RD39EL5		38.3	500m	1.0m	85		175J	A277b
115	3KZ43	10†	38.7	3.0 §	30m		.09		A3ak§
116	1C2992		39		65m	11			u36
117	TZPY39		39		10m	60	9.0		DO41
118	BZV49C39	5	39		5.0m	130	4.0	150J	M1008
119	CD4754A	5.0	39		6.5m	60		200	u52
120	CD5366B	5	39		30m	14	8.9	200J	u39b
121	NC39	5	39		2.0m	130	8.0		u47
122	1N1993B	1	39	150m	200u	400	10	150	C1
123	1N1993A	5	39	150m	200u	400	10	150	C1
124	1N1993	10	39	150m	200u	400	10	150	C1
125	1N1939B	1	39	200m	200u	400	10	150A	A82e
126	1N1939A	5	39	200m	200u	400	10	150A	A82e
127	BZX84C39	5	39	200m	2.0m	130	9.2	150J	M500d
128	RD39MB	5.0	39	200m	2.0m	100		150J	M713b
129	1N1939	10	39	200m	200u	400	10	150A	A82e
130	1N728A	5	39	250m	4.0m	70	9.2	175A	DO7
131	1N4123	5	39	.25	.25m	200		200J	DO7
132	1N4716	5	39	.25	.05m			200A	DO14
133	BZX60C39	5	39	250m	2.0m	400	9.0	150A	DO7
134	1/4M39Z10	10†	39	250m	1.6m	120		175J	E204h
135	1N728	10	39	250m	4.0m	70	9.2	175A	DO7
136	PTC517	10	39	254m†	6.5m	60			A1bc
137	MC6028,A	5†	39	.30	1.0m	140		175	A2m
138	BZX88C39	5	39	350m	5.0m	100	8.0	175J	A412
139	1N5750D	1	39	400m§	2.0m	130	8.7	200A	DO35
140	1N5750C	2	39	400m§	2.0m	130	8.7	200A	DO35
141	BZX79B39	2	39	400m§	2.0m	130	36mV	200J	DO35
142	RD39JSB2(A)								
		2.5	39.0	400m	5.0m	360		175J	DO34
143	1N975B	5	39	400m	3.2m	80		175S	A398a
144	1N3532	5	39	.40	3.0m	100	10	200A	DO7
145	1N5750B	5	39	400m§	2.0m	130	8.7	200A	DO35
146	BZX79C39	5	39	400m	2.0m	130	8.7	200J	A277a
147	CD975B	5	39	400m	3.2m	80	9.4	200J	u39a
148	CD4123	5	39	400m	250u	200	9.0	200J	u39a
149	CD5259B	5	39	400m	3.2m	80	9.4	200J	u39a
150	CH975	5	39	400m	3.2m	80	9.4	200J	u10
151	CH4123	5	39	400m	250u	200	9.5	200J	u10
152	CH5259	5	39	400m	3.2m	80	9.4	200J	u10
153	MZL339	5	39	400m	500u	350	10	175J	DO35
154	RD39JB	5	39	400m	5.0m	360		175J	DO35
155	RD39JSB(A)	5.0	39.0	400m	5.0m	360		175J	DO34
156	1N975A	10	39	400m	3.2m	80		175S	A398a
157	1N975	20	39	400m	3.2m	80		175S	A398a
158	05Z39		39	500m	5.0m	95		175J	DO35
159	GZA39		39	500m	5.0m	72 †	12	175J	A159
160	1N6014D	1	39	500m	2.0m	130		200J	DO35
161	1N6014C	2	39	500m	2.0m	130		200J	DO35
162	1N5259B	5	39	500m	3.2m	80	9.4	200A	A398a
163	1N5875B	5	39	500m	3.2m	190		150C	M859
164	1N6014B	5	39	500m	2.0m	130		200J	DO35
165	BZX46C39	5	39	500m	3.2m	80	12	175A	DO35
166	BZX55C39	5	39	500m	2.5m	90	9.0	175A	DO35
167	BZX83C39	5	39	500m	2.5m	90	9.0	175A	DO35
168	BZX97C39	5	39	500m	5.0m	100	8.0	175J	DO35
169	CTZ39A	5	39	500m	5.0m	1.0k	1.2k	200	DO35
170	MLL5259B	5.0	39	500m§	3.2m	80	9.4	200J	F140
171	MTZ628,A	5†	39	.50	1.0m	140		175A	A60e
172	MZ339,A,B	5	39	500m	5.0m	90	8.7	175J	DO35
173	RD39EB	5	39	500m	5.0m	250	8.7	175J	DO35
174▼	SZP5-39-5-1								
		5.0	39	500m	1.0m			175	u5a
175▼	SZ.5-39-5-25								
		5.0	39	500m	25m			175	u5a
176	ZMM39	5†	39	500m	5.0m	90	11	175J	F135
177	ZPD39	5	39	500m	2.0m	90	9.0	175J	DO35
178	BZV55C39	5.4	39	500m	2.0m	130	36	200J	F139
179	BZV60C39	5.4	39	500m	2.0m	130	36	200J	DO34
180	1N3409	10	39	500m	3.0m	110	6.8	200S	P5
181	1N3423	10	39	.50	1.0m	440	7.5	200A	P5
182	1N5259A	10	39	500m	3.2m	80	9.4	200A	A398a
183	1N5875A	10	39	500m	3.2m	190		150C	M859
184	1N6014A	10	39	500m	2.0m	170		200J	DO35
185	CTZ39	10	39	500m	5.0m	1.0k	1.2k	200	DO35
186	MLL5259A	10	39	500m§	3.2m	80	9.4	200J	F140
187▼	SZP5-39-10-1								
		10	39	500m	1.0m			175	u5a
188▼	SZ.5-39-10-25								
		10	39	500m	25m			175	u5a
189	1N5259	20†	39	.50	3.2m			200A	A398a
190	1N6014	20	39	500m	2.0m	170		200J	DO35
191	MLL5259	20	39	500m§	3.2m	80		200J	F140
192▼	SZP5-39-20-1								
		20	39	500m	1.0m			175	u5a
193▼	SZ.5-39-20-25								
		20	39	500m	25m			175	u5a
194	1N4646	5	39	.60	3.2m	1.0k	9.4	200A	DO14
195	1N3693B	5	39	750m	3.2m	80	9.0	175S	A1az
196	BZV41C39	5	39	750m	2.0m	130	8.0	175S	A412
197	MC6128,A	5†	39	.75	5.0m	140		175A	A2d
198	1N3693A	10	39	750m	3.2m	80	9.0	175S	A1az
199	1N3693	20	39	750m	3.2m	80	9.0	175S	A1az
200	BZX78C39		39	1.0	5.0m	40	37mV		
201	Z4A39	1†	39	1.0	10m	45	10	200J	DO29

SYMBOLS AND CODES EXPLAINED IN INTERPRETER

2. VOLTAGE REFERENCE DIODES - $V_Z \geq 36$ V (Cont'd)

IN ORDER OF: (1) REF. VOLTAGE (2) PD MAX (3) TOLERANCE & (4) TYPE NUMBER

LINE No.	4 TYPE No.	3 TOL ± (%)	1 NOM. REF. VOLT. (V)	2 PD @ 25°C MAX (W)	TEST CUR. Izt (A)	DYN. IMP. MAX (Ω)	TEMP. COEFF Tc MAX	TEMP MAX (°C)	DWG. NO.
1	1N1785A	5	39	1.0	15m	45		175A	DO13Ø
2	1N1883A	5	39	1.0	8.0m	35	7.0	200C	A41e
3	1N3034B	5	39	1.0	6.5m	60		175A	A31a
4	1N4176B	5	39	1.0 §	6.5m	60		200S	DO29
5	1N4341B	5	39	1.0	6.5m	60	9.0	300S	DO7
6	1N4418B	5	39	1.0	6.5m	21	9.0	175A	A1cm
7	1N4675	5	39	1.0	6.5m	750	9.4	200A	DO15
8	1N4754A	5	39	1.0	6.5m	60		200A	DO41
9	1N5577B	5	39	1.0 §	6.5m	60		200A	A60ac
10	AP39.0A,B	5†	39	1.0 †	3.2m	90			DO35
11	APD39.0A,B	5†	39	1.0 †	6.5m	60			A1rx
12	BZV85C39	5	39	1.0	6.0m	60	36mV	200J	DO41
13	BZX85C39	5	39	1.0 §	5.0m	50	9.5	150A	DO41
14	CD4754	5	39	1.0	6.5m	60	9.4	200J	u39a
15	CH4754	5	39	1.0	6.5m	60	9.0	200J	u10
16	PL39Z	5	39	1.0	10m	40	9.0	150J	
17	RD39FB	5	39	1.0	10m	20		175J	A297c
18	RD39P	5.0	39	1.0	5.0m	130	9.4	150J	M1008
19▼	SZ1-39-5-1	5.0	39	1.0	1.0m			175	u5b
20▼	SZ1-39-5-25	5.0	39	1.0	25m			175	u5b
21	TZB39B	5	39	1.0 §	1.0m		10	175A	A1ty
22	VR39,A,B	5†	39	1.0	6.5m	60		125A	A1b
23	Z4B39	5†	39	1.0	10m	45	10	200J	DO29
24	ZB39	5†	39	1.0 §	6.5m	60		150A	A1bc
25	ZB39B	5	39	1.0	6.5m	60		100C	A1bc
26	1N1785	10	39	1.0	15m	45		175A	DO13Ø
27	1N1883	10	39	1.0	8.0m	35	7.0	200C	A41e
28	1N3034A	10	39	1.0	6.5m	60		175A	A31a
29	1N4176A	10	39	1.0 §	6.5m	60		200S	DO29
30	1N4341A	10	39	1.0	6.5m	60	9.0	300S	DO7
31	1N4418A	10	39	1.0	6.5m	21	9.0	175A	A1cm
32	1N4754	10	39	1.0	6.5m	60		200A	DO41
33	1N5577A	10	39	1.0 §	6.5m	60		200A	A60ac
34	1S243	10	39	1.0	10m	40	8.9	150J	A56a
35▼	SZ1-39-10-1	10	39	1.0	1.0m			175	u5b
36▼	SZ1-39-10-25	10	39	1.0	25m			175	u5b
37	TZB39A	10	39	1.0 §	1.0m		10	175A	A1ty
38	ZB39A	10	39	1.0	6.5m	60		100C	A1bc
39	1N3034	20	39	1.0	6.5m	60		175A	A31a
40	1N4176	20	39	1.0 §	6.5m	60		200S	DO29
41	1N4341	20	39	1.0	6.5m	60	9.0	300S	DO7
42	1N4418	20	39	1.0	6.5m	21		175S	A266a
43	1N5577	20	39	1.0 §	6.5m			200A	A60ac
44▼	SZ1-39-20-1	20	39	1.0	1.0m			175	u5b
45▼	SZ1-39-20-25	20	39	1.0	25m			175	u5b
46	1N4846B	5	39	1.2	6.5m	60	9.4	175	DO29
47	1N4846A	10	39	1.2	6.5m	60	9.4	175	DO29
48	1N4846	20	39	1.2	6.5m	60	9.4	175	DO29
49	BZD10C39	5	39	1.3	10m	40	11		DO13
50	BZW22C39	5	39	1.3	10m	60	11		DO41
51	BZX61C39	5	39	1.3	5.0m	60	7.0	175J	DO15
52	BZX87C39	5	39	1.3	5.0m	40	9.2	200J	A60al
53	BZY97C39	5	39	1.3	10m	40	11		A1rx
54	ZD39	5	39	1.3	10	40	8.0	150J	DO13
55	ZMY39	5	39	1.3	10m	60	10	200J	F149
56	ZY39	5	39	1.3	10m	40	10	150J	A1bg
57	ZPY39	10	39	1.3	10m	60	12	200J	DO41
58	1N5939D	1	39	1.5	9.6m	45		200J	DO41
59	1N5939C	2	39	1.5	9.6m	45		200J	DO41
60	1N3803B	5	39	1.5	10m	40	9.4	175S	C14Ø
61	1N4479	5	39	1.5	6.5m	30		175A	A60y
62	1N5939B	5	39	1.5	9.6m	45		200J	DO41
63	1S4039,A	5†	39	1.5	5.0m	30	8.5	150A	DO1
64	BZY95C39	5	39	1.5	10m	35	8.9	175J	DO1
65	BZY97C39V	5†	39	1.5	10m	40	33mV	150J	A1bg
66	MC6328,A	5†	39	1.5	25m	120			A1q
67▼	SZ1.5-39-5-1	5.0	39	1.5	1.0m			175	u5b
68	1N3803A	10	39	1.5	10m	40	9.4	175S	C14Ø
69	1N5939A	10	39	1.5	9.6m	45		200J	DO41
70▼	SZ1.5-39-10-1	10	39	1.5	1.0m			175	u5b
71	1N3803	20	39	1.5	10m	40	9.4	175S	C14Ø
72	1N5939	20	39	1.5	9.6m	45		200J	DO41
73▼	SZ1.5-39-20-1	20	39	1.5	1.0m			175	u5b
74	2EZ39D5	5	39	2.0	12m	30		200J	A1ay
75	2VR39,A,B	5†	39	2.0	13m	50			A3e
76	BZV47C39	5	39	2.0	10m	40	9.0	175J	A344r
77	LMZ39A	5	39	2.0	13m	30	9.4	150A	DO41
78	ZBC39	5†	39	2.0 §	13m	27		150A	A1bc
79	ZBC39B	5	39	2.0	13	27			A1ty
80	2EZ39D10	10	39	2.0	12m	30		200J	A1ay
81	LMZ39	10	39	2.0	13m	30	9.4	150A	DO41
82	ZBC39A	10	39	2.0	13	27			A1ty
83	2EZ39D	20	39	2.0	12m	30		200J	A1ay
84	BZV15C39	5	39	2.2	200m	5.0	9.0	150J	M754Ø
85	Z7A39	1†	39	2.5	200m	5.0	10	200J	S457Ø
86	1N5038A	5	39	2.5	16m	24	9.0	150	A1gn
87	BZX70C39	5	39	2.5	10m	35	35mV	150J	A171b
88	Z2B39	5†	39	2.5	10m	45	10	200J	DO1
89	1N5038	10	39	2.5	16m	24	9.0	150	A1gn
90	3EZ39D1	1.0	39	3.0	19m	28		150J	A1ay
91	3EZ39D2	2.0	39	3.0	19m	28		150J	A1ay
92	3EZ39D3	3.0	39	3.0	19m	28		150J	A1ay
93	3EZ39D4	4.0	39	3.0	19	28		150J	A1ay
94	1N5080	5	39	3.0	20m	27		175A	A146u
95	3EZ39D5	5	39	3.0	19m	28		200J	A1ay
96	3VR39,A,B	5†	39	3.0	19m	30			A3al
97	BZV16C39	5	39	3.0	13m	60	9.0	175	DO3
98	MZ739	5	39	3.0	20m	27	9.5	175A	A146j
99	ZCC39	5†	39	3.0 §	20m	27		150A	A1ey
100	ZCC39B	5	39	3.0	20m	27			A1ey
101	3EZ39D10	10	39	3.0	19m	28		200J	A1ay
102	MZ839	10	39	3.0	20m	27	9.5	175A	A146j
103	ZCC39A	10	39	3.0	20m	27			A1ey
104	3EZ39D	20	39	3.0	19m	28		200J	A1ay
105	MZ939	20	39	3.0	20m	27	9.5	175A	A146j
106▼	BZT03/D39	10	39	3.2	10m	40	11	175J	A94g
107	3T39,A,B	5†	39	3.5	15m	45			DO4
108▼	SZ3-39-5-1	5.0	39	5.0	1.0m			175	u5c
109▼	SZ3-39-5-25	5.0	39	5.0	25m			175	u5c
110▼	SZ3-39-10-1	10	39	5.0	1.0m			175	u5c
111▼	SZ3-39-10-25	10	39	5.0	25m			175	u5c
112▼	SZ3-39-20-1	20	39	5.0	1.0m			175	u5c
113▼	SZ3-39-20-25	20	39	5.0	25m			175	u5c
114	RD39EC2		39.1	500m	5.0m	85		175J	A277b
115	RD39EL6		39.1	500m	1.0m	85		175J	A277b
116	RD39FB3		39.1	1.0	10m	20		175J	A277r
117	1N1966	10	39.5	400m	200u	400 †	10		A82e
118	RD35AE		39.7	250m	10m	250		175J	A277b
119	RD39EC3		39.8	500m	5.0m	85		175J	A277b
120	RD39EL7		39.8	500m	1.0m	85		175J	A277b
121	RD39JSB3(A)	2.5	39.9	400m	5.0m	360		175J	DO34
122	DSZ3040	10	40		20m	27	9.5		A266
123	1N1883B	1	40	1.0	8.0m	26 †	7.0	175A	DO13
124	UZ8740	5	40	1.0	6.5m	62	9.5	175	A380
125	UZ8840	10	40	1.0	6.5m	62	9.5	175	A380
126	1N5081	5	40	3.0	20m	27		175A	A146u
127	MZ740	5	40	3.0	20m	27	9.5	175A	A146j
128	UDZ740	5	40	3.0	20m	27		175A	A356a
129	UZ740	5	40	3.0	20m	27	9.5	175A	A380
130	MZ840#B	10	40	3.0	20m	27	9.5	175A	A146j
131	UZ840	10	40	3.0	20m	27	9.5	175A	A380
132	MZ940	20	40	3.0	20m	27	9.5	175A	A146j
133	UZ940	20	40	3.0	20m	27	9.5	175A	A380
134	1N2770	5	40.8		7.5m	120	.50	175A	A1jh
135	1N2770A	5	40.8		7.5m	120	.25	175A	A1jh
136	1N1321A	5	41	150m	200u			150A	C1
137	1N1321	10	41	150m	200u			150A	C1
138	RD39EC	5	41	500m	5.0m	250	8.8	175J	DO35
139	PS6321,A	15†	41	.50	.20m				DO14
140	RD39FC	4	41	1.0	10m	20		175J	A297c
141	PS1505	5	42	.25	10m	75	.20	150A	A1gc
142	PS1505A	5	42	.25	10m	75	.10	150A	A1gc
143	3KZ47	10†	42.3	3.0 §	25m		.09		A3ak§
144	1C2993		43		60m	12			u36
145	TZPY43		43		10m	80	10		DO41
146	BZV49C43	5	43		5.0m	150	4.0	150J	M1008
147	CD4755A	5.0	43		6.0m	70		200	u52
148	CD5367B	5	43		30m	20	9.0	200J	u39b
149	NC43	5	43		2.0m	150	8.0		u47
150	BZX84C43	5	43	200m	2.0m	150	9.5	150J	M500d
151	1N729A	5	43	250m	4.0m	84	9.2	175A	DO7
152	1N4124	5	43	.25	.25m	250		200J	DO7
153	1N4717	5	43	.25	.05m			200A	DO14
154	BZX60C43	5	43	250m	2.0m	450	9.0	150A	DO7
155	1/4M43Z10	10†	43	250m	1.5m	140		175J	E204h
156	1N729	10	43	250m	4.0m	84	9.2	175A	DO7
157	1N729B	20	43	.25	4.0m	84			DO7
158	MC6029,A	5†	43	.30	1.0m	172		175	A2m
159	BZX88C43	5	43	350m	5.0m	110	8.0	175J	A412
160	1N5751D	1	43	400m§	2.0m	150	8.6	200A	DO35
161	1N5751C	2	43	400m§	2.0m	150	8.6	200A	DO35
162	BZX79B43	2	43	400m§	2.0m	150	41mV	200J	DO35
163	1N976B	5	43	400m	3.0m	93		175S	A398a
164	1N3533	5	43	.40	2.0m	130	10	200A	DO7
165	1N5751B	5	43	400m§	2.0m	150	8.6	200A	DO35
166	BZX79C43	5	43	400m§	2.0m	150	41mV	200J	DO35
167	CD976B	5	43	400m	3.0m	93	9.5	200J	u39a
168	CD4124	5	43	400m	250u	250	9.0	200J	u39a
169	CD5260B	5	43	400m	3.0m	93	9.5	200J	u39a
170	CH976	5	43	400m	3.0m	93	9.5	200J	u10
171	CH4124	5	43	400m	250u	250	9.5	200J	u10
172	CH5260	5	43	400m	3.0m	93	9.5	200J	u10
173	MZL343	5	43	400m	500u	400	10	175J	DO35
174	1N976A	10	43	400m	3.0m	93		175S	A398a
175	1N976	20	43	400m	3.0m	93		175S	A398a
176	05Z43		43	500m	5.0m	95		175J	DO35
177	GZA43		43	500m	5.0m	75 †	12	175J	A159
178	1N6015D	1	43	500m	2.0m	150		200J	DO35
179	1N6015C	2	43	500m	2.0m	150		200J	DO35
180	1N5260B	5	43	500m	3.0m	93	9.5	200A	A398a
181	1N5876B	5	43	500m	3.0m	225		150C	M859
182	1N6015B	5	43	500m	2.0m	150		200J	DO35
183	BZX46C43	5	43	500m	3.0m	93	12	175A	DO35
184	BZX55C43	5	43	500m	2.5m	90	9.0	175A	DO35
185	BZX83C43	5	43	500m	2.5m	100	9.0	175A	DO35
186	CTZ43A	5	43	500m	1.0m	1.3k	1.2k	200	DO35
187	MLL5260B	5.0	43	500m§	3.0m	93	9.5	200J	F140
188	MTZ629,A	5†	43	.50	1.0m	172		175A	A60e
189	MZ343,A,B	5	43	500m	2.0m	100	8.7	175J	DO35
190	RD43EB	5	43	500m	5.0m	90		175J	DO35
191▼	SZP5-43-5-1	5.0	43	500m	1.0m			175	u5a
192▼	SZ.5-43-5-25	5.0	43	500m	25m			175	u5a
193	ZPD43	5	43	500m	2.0m	90	9.0	175J	DO35
194	BZX97C43	7	43	500m	5.0m	100	8.0	175J	DO35
195	ZMM43	7†	43	500m	5.0m	100	11	175J	F135
196	BZV55C43	7.5	43	500m	2.0m	150	41	200J	F139
197	BZV60C43	7.5	43	500m	2.0m	150	41	200J	DO34
198	1N5260A	10	43	500m	3.0m	93	9.5	200A	A398a
199	1N5876A	10	43	500m	3.0m	225		150C	M859
200	1N6015A	10	43	500m	2.0m	180		200J	DO35
201	CTZ43	10	43	500m	1.0m	1.3k	1.2k	200	DO35
202	MLL5260A	10	43	500m§	3.0m	93	9.5	200J	F140
203▼	SZP5-43-10-1	10	43	500m	1.0m			175	u5a

SYMBOLS AND CODES EXPLAINED IN INTERPRETER

2. VOLTAGE REFERENCE DIODES - $V_Z \geq 36$ V (Cont'd)

IN ORDER OF: (1) REF. VOLTAGE (2) PD MAX (3) TOLERANCE & (4) TYPE NUMBER

LINE No.	4 TYPE No.	3 TOL ± (%)	1 NOM. REF. VOLT. (V)	2 PD @ 25°C MAX (W)	TEST CUR. Izt (A)	DYN. IMP. MAX (Ω)	TEMP. COEFF Tc MAX	TEMP MAX (°C)	DWG. NO.
1▼	SZ.5-43-10-25								
		10	43	500m	25m			175	u5a
2	1N5260	20†	43	.50	3.0m			200A	A398a
3	1N6015	20	43	500m	2.0m	180		200J	DO35
4	MLL5260	20	43	500m§	3.0m	93		200J	F140
5▼	SZP5-43-20-1								
		20	43	500m	1.0m			175	u5a
6▼	SZ.5-43-20-25								
		20	43	500m	25m			175	u5a
7	1N4647	5	43	.60	3.0m	1.5k	9.5	200A	DO14
8	1N3694B	5	43	750m	3.0m	93	9.0	175S	A1az
9	BZV41C43	5	43	750m	2.0m	150	8.0	175S	A412
10	MC6129,A	5†	43	.75	5.0m	172		175A	A2d
11	1N3694A	10	43	750m	3.0m	93	9.0	175S	A1az
12	1N3694	20	43	750m	3.0m	93	9.0	175S	A1az
13	Z4A43	1†	43	1.0	10m	60	10	200J	DO29
14	1N1786A	5	43	1.0	15m	54		175A	DO13⊠
15	1N3035B	5	43	1.0	6.0m	70		175A	A31a
16	1N4177B	5	43	1.0 §	6.0m	70		200S	DO29
17	1N4342B	5	43	1.0	6.0m	70	9.0	300S	DO7
18	1N4419B	5	43	1.0	6.0m	23	9.0	175A	A1cm
19	1N								
20	1N4755A	5	43	1.0	6.0m	70		200A	DO41
21	1N5578B	5	43	1.0 §	6.0m	70		200A	A60ac
22	BZV85C43	5	43	1.0	6.0m	75	41mV	200J	DO41
23	BZX78C43	5	43	1.0	5.0m	50	41 V	200J	
24	BZX85C43	5	43	1.0 §	6.0m	50	9.5	150A	DO41
25	CD4755	5	43	1.0	6.0m	70	9.5	200J	u39a
26	CH4755	5	43	1.0	6.0m	70	9.0	200J	u10
27	PL43Z	5	43	1.0	10m	45	9.0	150J	
28	RD43FB	5	43	1.0	10m	50		175J	A297c
29▼	SZ1-43-5-1	5.0	43	1.0	1.0m			175	u5b
30▼	SZ1-43-5-25								
		5.0	43	1.0	25m			175	u5b
31	TZB43B	5	43	1.0 §	1.0m		10	175A	A1ty
32	VR43,A,B	5†	43	1.0	6.0m	70		125A	A1b
33	Z4B43	5†	43	1.0	10m	60	10	200J	DO29
34	ZB43	5†	43	1.0 §	6.0m	70		150A	A1bc
35	ZB43B	5	43	1.0	6.0m	70		100C	A1bc
36	1N1786	10	43	1.0	15m	54		175A	DO13⊠
37	1N3035A	10	43	1.0	6.0m	70		175A	A31a
38	1N4177A	10	43	1.0 §	6.0m	70		200S	DO29
39	1N4342A	10	43	1.0	6.0m	70	9.0	300S	DO7
40	1N4419A	10	43	1.0	6.0m	23	9.0	175A	A1cm
41	1N4755	10	43	1.0	6.0m	70		200A	DO41
42	1N5578A	10	43	1.0 §	6.0m	70		200A	A60ac
43	1S244	10	43	1.0	6.0m	50	8.8	150J	A56a
44▼	SZ1-43-10-1								
		10	43	1.0	1.0m			175	u5b
45▼	SZ1-43-10-25								
		10	43	1.0	25m			175	u5b
46	TZB43A	10	43	1.0 §	1.0m		11	175A	A1ty
47	ZB43A	10	43	1.0	6.0m	70		100C	A1bc
48	1N3035	20	43	1.0	6.0m	70		175A	A31a
49	1N4177	20	43	1.0 §	6.0m	70		200S	DO29
50	1N4342	20	43	1.0	6.0m	70	9.0	300S	DO7
51	1N4419	20	43	1.0	6.0m	23		175S	A266a
52	1N5578	20	43	1.0 §	6.0m			200A	A60ac
53▼	SZ1-43-20-1								
		20	43	1.0	1.0m			175	u5b
54▼	SZ1-43-20-25								
		20	43	1.0	25m			175	u5b
55	1N4847B	5	43	1.2	5.8m	70	9.5	175	DO29
56	1N4847A	10	43	1.2	5.8m	70	9.5	175	DO29
57	1N4847	20	43	1.2	5.8m	70	9.5	175	DO29
58	BZX61C43	5	43	1.3	5.0m	70	7.0	175J	DO15
59	BZX87C43	5	43	1.3	5.0m	50	9.3	200J	A60al
60	BZY97C43	5	43	1.3	10m	45	12		A1rx
61	ZD43	5	43	1.3	10	45	8.0	150J	DO13
62	ZY43	5	43	1.3	10m	45	10	150J	A1bg
63	BZD10C43	7	43	1.3	10m	45	12		DO13
64	BZW22C43	7	43	1.3	10m	80	12		DO41
65	ZMY43	7	43	1.3	10m	80	10	200J	F149
66	ZPY43	13	43	1.3	10m	80	13	200J	DO41
67	1N5940D	1	43	1.5	8.7m	53		200J	DO41
68	1N5940C	2	43	1.5	8.7m	53		200J	DO41
69	1N3804B	5	43	1.5	9.0m	45	9.5	175S	C14⊠
70	1N4067	5	43	1.5	7.5m	90	.50	100	A1ss
71	1N4067A	5	43	1.5	7.5m	90	.20	100	A1ss
72	1N4480	5	43	1.5	6.0m	40		175A	A60y
73	1N5940B	5	43	1.5	8.7m	53		200J	DO41
74	1S4043,A	5†	43	1.5	5.0m	35	8.5	150A	DO1
75	BZY95C43	5	43	1.5	10m	40	9.0	175J	DO1
76	BZY97C43V	5†	43	1.5	10m	45	40mV	150J	A1bg
77	MC6329,A	5†	43	1.5	25m	140			A1q
78▼	SZ1.5-43-5-1								
		5.0	43	1.5	1.0m			175	u5b
79	1N3804A	10	43	1.5	9.0m	45	9.5	175S	C14⊠
80	1N5940A	10	43	1.5	8.7m	53		200J	DO41
81▼	SZ1.5-43-10-1								
		10	43	1.5	1.0m			175	u5b
82	1N3804	20	43	1.5	9.0m	45	9.5	175S	C14⊠
83	1N5940	20	43	1.5	8.7m	53		200J	DO41
84▼	SZ1.5-43-20-1								
		20	43	1.5	1.0m			175	u5b
85	2EZ43D5	5	43	2.0	11m	35		200J	A1ay
86	2VR43,A,B	5†	43	2.0	12m	60			A3e
87	BZV47C43	5	43	2.0	10m	45	9.0	175J	A344r
88	LMZ43A	5	43	2.0	11m	35	9.5	150A	DO41
89	ZBC43	5†	43	2.0 §	12m	35		150A	A1bc
90	ZBC43B	5	43	2.0	12	35			A1ty
91	2EZ43D10	10	43	2.0	11m	35		200J	A1ay
92	LMZ43	10	43	2.0	11m	35	9.5	150A	DO41
93	ZBC43A	10	43	2.0	12	35			A1ty
94	2EZ43D	20	43	2.0	11m	35		200J	A1ay
95	BZV15C43	5	43	2.2	200m	6.5	9.2	150J	M754⊠
96	Z7A43	1†	43	2.5	200m	6.5	10	200J	S457⊠
97	1N5039A	5	43	2.5	15m	27	9.0	150	A1gn
98	BZX70C43	5	43	2.5	10m	40	40mV	150J	A171b
99	Z2B43	5†	43	2.5	10m	60	10	200J	DO1
100	1N5039	10	43	2.5	15m	27	9.0	150	A1gn
101	3EZ43D1	1.0	43	3.0	17m	33		150J	A1ay
102	3EZ43D2	2.0	43	3.0	17m	33		150J	A1ay
103	3EZ43D3	3.0	43	3.0	17m	33		150J	A1ay
104	3EZ43D4	4.0	43	3.0	17m	33		150J	A1ay
105	1N5082	5	43	3.0	15m	35		175A	A146u
106	3EZ43D5	5	43	3.0	17m	33		200J	A1ay
107	3VR43,A,B	5†	43	3.0	18m	35			A3al
108	BZV16C43	5	43	3.0	12m	70	9.0	175	DO3
109	MZ743	5	43	3.0	15m	35	9.5	175A	A146j
110	ZCC43	5†	43	3.0 §	15m	35		150A	A1ey
111	ZCC43B	5	43	3.0	15m	35			A1ey
112	3EZ43D10	10	43	3.0	17m	33		200J	A1ay
113	MZ843	10	43	3.0	15m	35	9.5	175A	A146j
114	ZCC43A	10	43	3.0	15m	35			A1ey
115	3EZ43D	20	43	3.0	17m	33		200J	A1ay
116	MZ943	20	43	3.0	15m	35	9.5	175A	A146j
117▼	BZT03/D43	10	43	3.2	10m	45	12	175J	A94g
118	3T43,A,B	5†	43	3.5	15m	54			DO4
119▼	SZ3-43-5-1	5.0	43	5.0	1.0m			175	u5c
120▼	SZ3-43-5-25								
121▼	SZ3-43-10-1								
		10	43	5.0	1.0m			175	u5c
122▼	SZ3-43-10-25								
		10	43	5.0	25m			175	u5c
123▼	SZ3-43-20-1								
		20	43	5.0	1.0m			175	u5c
124▼	SZ3-43-20-25								
		20	43	5.0	25m			175	u5c
125	ZS43	5†	43.4	750m	7.5m	105	500m	150A	C3h
126	1N1741	5	43.4	1.4	7.5m	140	80	150C	A69y
127	1N1741A	5	43.4	1.4	7.5m	140	40	150C	A69y
128	DSZ3045	10	45		15m	37	9.5		A266
129	1/4M45Z10	10†	45	250m	1.4m	150		175J	E204h
130	UZ8745	5	45	1.0	6.0m	75	9.5	175	A380
131	1S245	10	45	1.0	6.0m	55	8.8	150J	A56a
132	UZ8845	10	45	1.0	6.0m	75	9.5	175	A380
133	ZBC45	5†	45	2.0 §	11m	37		150A	A1bc
134	ZBC45B	5	45	2.0	11	37			A1ty
135	ZBC45A	10	45	2.0	11	37			A1ty
136	1N5040A	5	45	2.5	14m	30	9.0	150	A1gn
137	1N5040	10	45	2.5	14m	30	9.0	150	A1gn
138	1N5083	5	45	3.0	15m	37		175A	A146u
139	MZ745	5	45	3.0	15m	37	9.5	175A	A146j
140	UDZ745	5	45	3.0	15m	37		175A	A356a
141	UZ745	5	45	3.0	15m	37	9.5	175A	A380
142	ZCC45	5†	45	3.0 §	15m	37		150A	A1ey
143	ZCC45B	5	45	3.0	15m	37			A1ey
144	MZ845	10	45	3.0	15m	37	9.5	175A	A146j
145	UZ845	10	45	3.0	15m	37	9.5	175A	A380
146	ZCC45A	10	45	3.0	15m	37			A1ey
147	MZ945	20	45	3.0		37	9.5	175A	A146j
148	UZ945	20	45	3.0	15m	37	9.5	175A	A380
149	3KZ51	10†	45.9	3.0 §	25m		.09		A3ak§
150	1C2995		47		55m	14			u36
151	TZPY47		47		10m	80	10		DO41
152	BZV49C47	5	47		5.0m	170	4.0	150J	M1008
153	CD4756A	5.0	47		5.5m	80		200	u52
154	CD5368B	5	47		25m	25	9.0	200J	u39b
155	NC47	5	47		2.0m	170	8.0		u47
156	1N1994B	1	47	150m	200u	500	10	150	C1
157	1N1994A	5	47	150m	200u	500	10	150	C1
158	1N1994	10	47	150m	200u	500	10	150	C1
159	1N1940B	1	47	200m	200u	500	10	150A	A82e
160	1N1940A	5	47	200m	200u	500	10	150A	A82e
161	BZX84C47	5	47	200m	2.0m	170	9.8	150J	M500d
162	1N1940	10	47	200m	200u	500	10	150A	A82e
163	1N730A	5	47	250m	4.0m	98	9.3	175A	DO7
164	1N4125	5	47	.25	.25m	250		200J	DO7
165	BZX60C47	5	47	250m	2.0m	500	9.0	150A	DO7
166	1/4M47Z10	10†	47	250m	1.3m	160		175J	E204h
167	1N730	10	47	250m	4.0m	98	9.3	175A	DO7
168	1N730B	20	47	.25	4.0m	98			DO7
169	PTC518	10	47	259m†	5.5m	80			A1bc
170	MC6030,A	5†	47	.30	1.0m	220		175	A2m
171	BZX88C47	5	47	350m	5.0m	120	8.0	175J	A412
172	1N5752D	1	47	400m§	2.0m	170	8.5	200A	DO35
173	1N5752C	2	47	400m§	2.0m	170	8.5	200A	DO35
174	BZX79B47	2	47	400m§	2.0m	170	46mV	200J	DO35
175	1N977B	5	47	400m	2.7m	105		175S	A398a
176	1N3534	5	47	.40	2.0m	150	10	200A	DO7
177	1N5752B	5	47	400m§	2.0m	170	8.5	200A	DO35
178	BZX79C47	5	47	400m§	2.0m	170	46mV	200J	DO35
179	CD977B	5	47	400m	2.7m	105	9.5	200J	u39a
180	CD4125	5	47	400m	250u	250	9.0	200J	u39a
181	CD5261B	5	47	400m	2.7m	105	9.5	200J	u39a
182	CH977	5	47	400m	2.7m	105	9.5	200J	u10
183	CH4125	5	47	400m	250u	250	9.5	200J	u10
184	CH5261	5	47	400m	2.7m	105	9.5	200J	u10
185	1N977A	10	47	400m	2.7m	105		175S	A398a
186	1N1967	10	47	400m	200u	500 †	10		A82e
187	1N977	20	47	400m	2.7m	105		175S	A398a
188	05Z47		47	500m	5.0m	100		175J	DO35
189	GZA47		47	500m	5.0m	80 †	12	175J	A159
190	1N6016D	1	47	500m	2.0m	170		200J	DO35
191	1N6016C	2	47	500m	2.0m	170		200J	DO35
192	1N5261B	5	47	500m	2.7m	105	9.5	200A	A398a
193	1N5877B	5	47	500m	2.7m	260		150C	M859
194	1N6016B	5	47	500m	2.0m	170		200J	DO35
195	BZX46C47	5	47	500m	2.7m	105	8.0	175J	DO35
196	BZX55C47	5	47	500m	2.5m	110	8.0	175J	DO35
197	BZX83C47	5	47	500m	2.5m	120	9.0	175J	DO35
198	CTZ47A	5	47	500m	1.0m	1.5k	1.2k	200	DO35
199	MLL5261B	5.0	47	500m§	2.7m	105	9.5	200J	F140
200	MTZ630,A	5†	47	.50	1.0m	220		175A	A60e
201	RD47EB	5	47	500m	5.0m	90		175J	DO35
202▼	SZP5-47-5-1								
		5.0	47	500m	1.0m			175	u5a

SYMBOLS AND CODES EXPLAINED IN INTERPRETER

2. VOLTAGE REFERENCE DIODES - $V_Z \geq 36$ V (Cont'd)

IN ORDER OF: (1) REF. VOLTAGE (2) PD MAX (3) TOLERANCE & (4) TYPE NUMBER

LINE No.	4 TYPE No.	3 TOL ± (%)	1 NOM. REF. VOLT. (V)	2 PD @ 25°C MAX (W)	TEST CUR. Izt (A)	DYN. IMP. MAX (Ω)	TEMP. COEFF Tc MAX	TEMP MAX (°C)	DWG. NO.
1▼	SZ.5-47-5-25								
		5.0	47	500m	25m			175	u5a
2	ZPD47	5	47	500m	2.0m	110	9.0	175J	DO35
3	BZX97C47	6	47	500m	5.0m	120	8.0	175J	DO35
4	ZMM47	6†	47	500m	5.0m	100	11	175J	F135
5	BZV55C47	6.8	47	500m	2.0m	170	46	200J	F139
6	BZV60C47	6.8	47	500m	2.0m	170	46	200J	DO34
7	1N3410	10	47	500m	3.0m	125	7.0	200S	P5
8	1N3424	10	47	.50	1.0m	540	7.3	200A	P5
9	1N5261A	10	47	500m	2.7m	105	9.5	200A	A398a
10	1N5877A	10	47	500m	2.7m	260		150C	M859
11	1N6016A	10	47	500m	2.0m	200		200J	DO35
12	CTZ47	10	47	500m	1.0m	1.5k	1.2k	200	DO35
13	MLL5261A	10	47	500m§	2.7m	105	9.5	200J	F140
14▼	SZP5-47-10-1								
		10	47	500m	1.0m			175	u5a
15▼	SZ.5-47-10-25								
		10	47	500m	25m			175	u5a
16	1N5261	20†	47	.50	2.7m			200A	A398a
17	1N6016	20	47	500m	2.0m	200		200J	DO35
18	MLL5261	20	47	500m§	2.7m	105		200J	F140
19▼	SZP5-47-20-1								
		20	47	500m	1.0m			175	u5a
20▼	SZ.5-47-20-25								
		20	47	500m	25m			175	u5a
21	1N4648	5	47	.60	2.7m	1.5k	9.5	200A	DO14
22	1N3695B	5	47	750m	2.7m	105	9.0	175S	A1az
23	BZV41C47	5	47	750m	2.0m	170	8.0	175S	A412
24	MC6130,A	5†	47	.75	5.0m	220		175A	A2d
25	1N3695A	10	47	750m	2.7m	105	9.0	175S	A1az
26	1N3695	20	47	750m	2.7m	105	9.0	175S	A1az
27	BZX78C47		47	1.0	5.0m	60	46mV		
28	1N1884B	1	47	1.0	8.0m	28 †	7.2	175A	DO13
29	Z4A47	1†	47	1.0	10m	70	10	200J	DO29
30	1N1787A	5	47	1.0	15m	64		175A	DO13Ø
31	1N1884A	5	47	1.0	8.0m	50	7.2	200C	A41e
32	1N3036B	5	47	1.0	5.5m	80		175A	A31a
33	1N4178B	5	47	1.0 §	5.5m	80		200S	DO29
34	1N4343B	5	47	1.0	5.5m	80	9.0	300S	DO7
35	1N4420B	5	47	1.0	5.5m	26	9.0	175A	A1cm
36	1N4677	5	47	1.0	5.5m	1.0k	9.5	200A	DO15
37	1N4756A	5	47	1.0	5.5m	80		200A	DO41
38	1N5579B	5	47	1.0 §	5.5m	80		200A	A60ac
39	BZV85C47	5	47	1.0	4.0m	100	45mV	200J	DO41
40	CD4756	5	47	1.0	5.5m	80	9.5	200J	u39a
41	CH4756	5	47	1.0	5.5m	80	9.0	200J	u10
42	PL47Z	5	47	1.0	10m	45	9.0	150J	
43	RD47FB	5	47	1.0	10m	50		175J	A297c
44▼	SZ1-47-5-1	5.0	47	1.0	1.0m			175	u5b
45▼	SZ1-47-5-25								
		5.0	47	1.0	25m			175	u5b
46	TZB47B	5	47	1.0 §	1.0m		10	175A	A1ty
47	VR47,A,B	5†	47	1.0	5.5m	80		125A	A1b
48	Z4B47	5†	47	1.0	10m	70	10	200J	DO29
49	ZB47	5†	47	1.0 §	5.5m	80		150A	A1bc
50	ZB47B	5	47	1.0	5.5m	80		100C	A1bc
51	1N1787	10	47	1.0	15m	64		175A	DO13Ø
52	1N1884	10	47	1.0	8.0m	50	7.2	200C	A41e
53	1N3036A	10	47	1.0	5.5m	80		175A	A31a
54	1N4178A	10	47	1.0 §	5.5m	80		200S	DO29
55	1N4343A	10	47	1.0	5.5m	80	9.0	300S	DO7
56	1N4420A	10	47	1.0	5.5m	26	9.0	175A	A1cm
57	1N4756	10	47	1.0	5.5m	80		200A	DO41
58	1N5579A	10	47	1.0 §	5.5m	80		200A	A60ac
59	1S246	10	47	1.0	6.0m	60	9.1	150J	A56a
60▼	SZ1-47-10-1								
		10	47	1.0	1.0m			175	u5b
61▼	SZ1-47-10-25								
		10	47	1.0	25m			175	u5b
62	TZB47A	10	47	1.0 §	1.0m		10	175A	A1ty
63	ZB47A	10	47	1.0	5.5m	80		100C	A1bc
64	1N3036	20	47	1.0	5.5m	80		175A	A31a
65	1N4178	20	47	1.0 §	5.5m	80		200S	DO29
66	1N4343	20	47	1.0	5.5m	80	9.0	300S	DO7
67	1N4420	20	47	1.0	5.5m	26		175S	A266a
68	1N5579	20	47	1.0 §	5.5m			200A	A60ac
69▼	SZ1-47-20-1								
		20	47	1.0	1.0m			175	u5b
70▼	SZ1-47-20-25								
		20	47	1.0	25m			175	u5b
71	1N4848B	5	47	1.2	5.3m	80	9.5	175	DO29
72	1N4848A	10	47	1.2	5.3m	80	9.5	175	DO29
73	1N4848	20	47	1.2	5.3m	80	9.5	175	DO29
74	BZX61C47	5	47	1.3	5.0m	80	8.0	175J	DO15
75	BZX85C47	5	47	1.3	4.0m	30	8.0	175J	DO41
76	BZX87C47	5	47	1.3	5.0m	60	9.5	200J	A60al
77	BZY97C47	5	47	1.3	10m	45	12		A1rx
78	ZD47	5	47	1.3	10	45	9.0	150J	DO13
79	ZY47	5	47	1.3	10m	45	10	150J	A1bg
80	BZD10C47	6	47	1.3	10m	45	12		DO13
81	BZW22C47	6	47	1.3	10m	80	12		DO41
82	ZMY47	6	47	1.3	10m	80	10	200J	F149
83	ZPY47	12	47	1.3	10m	80	13	200J	DO41
84	1N5941D	1	47	1.5	8.0m	67		200J	DO41
85	1N5941C	2	47	1.5	8.0m	67		200J	DO41
86	1N3805B	5	47	1.5	8.0m	55	9.5	175S	C14Ø
87	1N4068	5	47	1.5	7.5m	100	.50	100	A1ss
88	1N4068A	5	47	1.5	7.5m	100	.20	100	A1ss
89	1N4481	5	47	1.5	5.5m	50		175A	A60y
90	1N5941B	5	47	1.5	8.0m	67		200J	DO41
91	1S4047,A	5†	47	1.5	5.0m	38	8.5	150A	DO1
92	BZY95C47	5	47	1.5	10m	45	9.5	175J	DO1
93	BZY97C47V	5†	47	1.5	10m	45	44mV	150J	A1bg
94	MC6330,A	5†	47	1.5	25m	160			A1q
95▼	SZ1.5-47-5-1								
		5.0	47	1.5	1.0m			175	u5b
96	1N3805A	10	47	1.5	8.0m	55	9.5	175S	C14Ø
97	1N5941A	10	47	1.5	8.0m	67		200J	DO41
98▼	SZ1.5-47-10-1								
		10	47	1.5	1.0m			175	u5b
99	1N3805	20	47	1.5	8.0m	55	9.5	175S	C14Ø
100	1N5941	20	47	1.5	8.0m	67		200J	DO41
101▼	SZ1.5-47-20-1								
		20	47	1.5	1.0m			175	u5b
102	2EZ47D5	5	47	2.0	10m	40		200J	A1ay
103	2VR47,A,B	5†	47	2.0	11m	70			A3e
104	BZV47C47	5	47	2.0	10m	45	9.0	175J	A344r
105	LMZ47A	5	47	2.0	10m	40	9.5	150A	DO41
106	ZBC47	5†	47	2.0 §	11m	43		150A	A1bc
107	ZBC47B	5	47	2.0	11	43			A1ty
108	2EZ47D10	10	47	2.0	10m	40		200J	A1ay
109	LMZ47	10	47	2.0	10m	40	9.5	150A	DO41
110	ZBC47A	10	47	2.0	11	43			A1ty
111	2EZ47D	20	47	2.0	10m	40		200J	A1ay
112	BZV15C47	5	47	2.2	200m	7.0	9.3	150J	M754Ø
113	Z7A47	1†	47	2.5	200m	7.0	10	200J	S457Ø
114	1N5041A	5	47	2.5	13m	33	9.0	150	A1gn
115	BZX70C47	5	47	2.5	10m	50	45mV	150J	A171b
116	Z2B47	5†	47	2.5	10m	70	10	200J	DO1
117	1N5041	10	47	2.5	13m	33	9.0	150	A1gn
118	3EZ47D1	1.0	47	3.0	16m	38		150J	A1ay
119	3EZ47D2	2.0	47	3.0	16m	38		150J	A1ay
120	3EZ47D3	3.0	47	3.0	16m	38		150J	A1ay
121	3EZ47D4	4.0	47	3.0	16m	38		150J	A1ay
122	1N5084	5	47	3.0	15m	43		175A	A146u
123	3EZ47D5	5	47	3.0	16m	38		200J	A1ay
124	3VR47,A,B	5†	47	3.0	16m	40			A3al
125	BZV16C47	5	47	3.0	11m	80	9.0	175	DO3
126	MZ747	5	47	3.0	15m	43	9.5	175A	A146j
127	ZCC47	5†	47	3.0 §	15m	43		150A	A1ey
128	ZCC47B	5	47	3.0	15m	43			A1ey
129	3EZ47D10	10	47	3.0	16m	38		200J	A1ay
130	MZ847	10	47	3.0	15m	43	9.5	175A	A146j
131	ZCC47A	10	47	3.0	15m	43			A1ey
132	3EZ47D	20	47	3.0	16m	38		200J	A1ay
133	MZ947	20	47	3.0	15m	43	9.5	175A	A146j
134▼	BZT03/D47	10	47	3.2	10m	45	12	175J	A94g
135	3T47,A,B	5†	47	3.5	15m	64			DO4
136▼	SZ3-47-5-1	5.0	47	5.0	1.0m			175	u5c
137▼	SZ3-47-5-25								
		5.0	47	5.0	25m			175	u5c
138▼	SZ3-47-10-1								
		10	47	5.0	1.0m			175	u5c
139▼	SZ3-47-10-25								
		10	47	5.0	25m			175	u5c
140▼	SZ3-47-20-1								
		20	47	5.0	1.0m			175	u5c
141▼	SZ3-47-20-25								
		20	47	5.0	25m			175	u5c
142	PS6322	15	48.5	.50		.20		200A	DO14
143	1N1322A	5	49.5	150m	200u			150A	C1
144	1N1322	10	49.5	150m	200u			150A	C1
145	1N1742	5	49.6	1.6	7.5m	160	80	150C	A69y
146	1N1742A	5	49.6	1.6	7.5m	60	40	150C	A69y

$V_Z \geq 50$ V

LINE No.	4 TYPE No.	3 TOL ± (%)	1 NOM. REF. VOLT. (V)	2 PD @ 25°C MAX (W)	TEST CUR. Izt (A)	DYN. IMP. MAX (Ω)	TEMP. COEFF Tc MAX	TEMP MAX (°C)	DWG. NO.
150	DSZ3050	10	50		15m	50	9.5		A266
151	1/4M50Z10	10†	50	250m	1.2m	180		175J	E204h
152▼	ZS50#C	5	50	750m	7.5m	120	500m	150A	C3j
153	UZ8750	5	50	1.0	5.0m	85	9.5	175	A380
154	1S247	10	50	1.0	6.0m	65	9.0	150J	A56a
155	UZ8850	10	50	1.0	5.0m	85	9.5	175	A380
156	ZBC50	5†	50	2.0 §	10m	50		150A	A1bc
157	ZBC50B	5	50	2.0	10	50			A1ty
158	ZBC50A	10	50	2.0	10	50			A1ty
159	1N5042A	5	50	2.5	12m	36	9.0	150	A1gn
160	1N5042	10	50	2.5	12m	36	9.0	150	A1gn
161	1N5085	5	50	3.0	15m	50		175A	A146u
162	MZ750	5	50	3.0	15m	50	9.5	175A	A146j
163	UZ750	5	50	3.0	15m	50	9.5	175A	A380
164	ZCC50	5†	50	3.0 §	15m	50		150A	A1ey
165	ZCC50B	5	50	3.0	15m	50			A1ey
166	1N4321	10	50	3.0	15m	50		175S	A60
167	MZ850	10	50	3.0	15m	50	9.5	175A	A146j
168	UZ850	10	50	3.0	15m	50	9.5	175A	A380
169	ZCC50A	10	50	3.0	15m	50			A1ey
170	MZ950	20	50	3.0	15m	50	9.5	175A	A146j
171	UZ950	20	50	3.0	15m	50	9.5	175A	A380
172	PS1506	5	50.4	.25	10m	90	.20	150A	A1gc
173	PS1506A	5	50.4	.25	10m	90	.10	150A	A1gc
174	3KZ56	10†	50.4	3.0 §	20m		.09		A3ak§
175	TZPY51		51		10m	100	10		DO41
176	CD4757A	5.0	51		5.0m	95		200	u52
177	CD5369B	5	51		25m	27	9.1	200J	u39b
178	BZX84C51	5	51	200m	2.0m	180	10	150J	M500d
179	1N731A	5	51	250m	4.0m	115	9.5	175A	DO7
180	1N4126	5	51	.25	.25m	300		200J	DO7
181	BZX60C51	5	51	250m	2.0m	600	9.0	150A	DO7
182	1N731	10	51	250m	4.0m	115	9.5	175A	DO7
183	1N731B	20	51	.25	4.0m	115			DO7
184	1N5753D	1	51	400m§	2.0m	180	8.6	200A	DO35
185	1N5753C	2	51	400m§	2.0m	180	8.6	200A	DO35
186	BZX79B51	2	51	400m§	2.0m	180	51mV	200J	DO35
187	1N978B	5	51	400m	2.5m	125		175S	A398a
188	1N5753B	5	51	400m§	2.0m	180	8.6	200A	DO35
189	BZX79C51	5	51	400m§	2.0m	180	51mV	200J	DO35
190	CD978B	5	51	400m	2.5m	125	9.6	200J	u39a
191	CD4126	5	51	400m	250u	300	9.0	200J	u39a
192	CD5262B	5	51	400m	2.5m	125	9.6	200J	u39a
193	CH978	5	51	400m	2.5m	125	9.6	200J	u10
194	CH4126	5	51	400m	250u	300	10	200J	u10
195	CH5262	5	51	400m	2.5m	125	9.6	200J	u10
196	1N978A	10	51	400m	2.5m	125		175S	A398a
197	1N978	20	51	400m	2.5m	125		175S	A398a
198	05Z51		51	500m	5.0m	110		175J	DO35
199	GZA51		51	500m	5.0m	87 †	13	175J	A159
200	1N6017D	1	51	500m	2.0m	180		200J	DO35
201	1N6017C	2	51	500m	2.0m	180		200J	DO35
202	1N5262B	5	51	500m	2.5m	125	9.6	200A	A398a

SYMBOLS AND CODES EXPLAINED IN INTERPRETER

2. VOLTAGE REFERENCE DIODES - $V_Z \geq 50$ V (Cont'd)

IN ORDER OF: (1) REF. VOLTAGE (2) PD MAX (3) TOLERANCE & (4) TYPE NUMBER

LINE No.	4 TYPE No.	3 TOL ± (%)	1 NOM. REF. VOLT. (V)	2 PD @ 25°C MAX (W)	TEST CUR. Izt (A)	DYN. IMP. MAX (Ω)	TEMP. COEFF Tc MAX	TEMP MAX (°C)	DWG. NO.
1	1N5878B	5	51	500m	2.5m	300		150C	M859
2	1N6017B	5	51	500m	2.0m	180		200J	DO35
3	BZX46C51	5	51	500m	2.5m	125	8.0	175J	DO35
4	BZX83C51	5	51	500m	2.5m	135	9.0	175J	DO35
5	MLL5262B	5.0	51	500m§	2.5m	125	9.6	200J	F140
6	RD51EB	5	51	500m	5.0m	110		175J	DO35
7▼	SZP5-51-5-1								
		5.0	51	500m	1.0m			175	u5a
8▼	SZ.5-51-5-25								
		5.0	51	500m	25m			175	u5a
9	ZPD51	5	51	500m	2.0m	125	9.0	175J	DO35
10	ZMM51	6†	51	500m	5.0m	100	11	175J	F135
11	BZV55C51	6.2	51	500m	2.0m	180	51	200J	F139
12	BZV60C51	6.2	51	500m	2.0m	180	51	200J	DO34
13	1N5262A	10	51	500m	2.5m	125	9.6	200A	A398a
14	1N5878A	10	51	500m	2.5m	300		150C	M859
15	1N6017A	10	51	500m	2.0m	225		200J	DO35
16	MLL5262A	10	51	500m§	2.5m	125	9.6	200J	F140
17▼	SZP5-51-10-1								
		10	51	500m	1.0m			175	u5a
18▼	SZ.5-51-10-25								
		10	51	500m	25m			175	u5a
19	1N5262	20†	51	.50	2.5m			200A	A398a
20	1N6017	20	51	500m	2.0m	225		200J	DO35
21	MLL5262	20	51	500m§	2.5m	125		200J	F140
22▼	SZP5-51-20-1								
		20	51	500m	1.0m			175	u5a
23▼	SZ.5-51-20-25								
		20	51	500m	25m			175	u5a
24	1N3696B	5	51	750m	2.5m	125	9.0	175S	A1az
25	1N3696A	10	51	750m	2.5m	125	9.0	175S	A1az
26	1N3696	20	51	750m	2.5m	125	9.0	175S	A1az
27	BZX78C51		51	1.0	5.0m	70	51mV		
28	Z4A51	1†	51	1.0	5.0m	90	10	200J	DO29
29	1N1788A	5	51	1.0	15m	74		175A	DO13Ø
30	1N3037B	5	51	1.0	5.0m	95		175A	A31a
31	1N4179B	5	51	1.0 §	5.0m	95		200S	DO29
32	1N4344B	5	51	1.0	5.0m	95	9.0	300S	DO7
33	1N4421B	5	51	1.0	5.0m	30			A1bc
34	1N4757A	5	51	1.0	5.0m	95		200A	DO41
35	1N5580B	5	51	1.0 §	5.0m	95		200A	A60ac
36	BZV85C51	5	51	1.0	4.0m	125	49mV	200J	DO41
37	CD4757	5	51	1.0	5.0m	95	9.6	200J	u39a
38	CH4757	5	51	1.0	5.0m	95	9.0	200J	u10
39	PL51Z	5	51	1.0	10m	60	9.0	150J	
40	RD51FB	5	51	1.0	10m	50		175J	A297c
41▼	SZ1-51-5-1	5.0	51	1.0	1.0m			175	u5b
42▼	SZ1-51-5-25								
		5.0	51	1.0	25m			175	u5b
43	TZB51B	5	51	1.0 §	1.0m		10	175A	A1ty
44	VR51,A,B	5†	51	1.0	5.0m	95		125A	A1b
45	Z4B51	5†	51	1.0	5.0m	90	10	200J	DO29
46	ZB51	5†	51	1.0 §	5.0m	95		150A	A1bc
47	ZB51B	5	51	1.0	5.0m	95		100C	A1bc
48	1N1788	10	51	1.0	15m	74		175A	DO13Ø
49	1N3037A	10	51	1.0	5.0m	95		175A	A31a
50	1N4179A	10	51	1.0 §	5.0m	95		200S	DO29
51	1N4344A	10	51	1.0	5.0m	95	9.0	300S	DO7
52	1N4421A	10	51	1.0	5.0m	30			A1bc
53	1N4757	10	51	1.0	5.0m	95		200A	DO41
54	1N5580A	10	51	1.0 §	5.0m	95		200A	A60ac
55▼	SZ1-51-10-1								
		10	51	1.0	1.0m			175	u5b
56▼	SZ1-51-10-25								
		10	51	1.0	25m			175	u5b
57	TZB51A	10	51	1.0 §	1.0m		10	175A	A1ty
58	ZB51A	10	51	1.0	5.0m	95		100C	A1bc
59	1N3037	20	51	1.0	5.0m	95		175A	A31a
60	1N4179	20	51	1.0 §	5.0m	95		200S	DO29
61	1N4344	20	51	1.0	5.0m	95	9.0	300S	DO7
62	1N4421	20	51	1.0	5.0m	30		175S	A266a
63	1N5580	20	51	1.0 §	5.0m			200A	A60ac
64▼	SZ1-51-20-1								
		20	51	1.0	1.0m			175	u5b
65▼	SZ1-51-20-25								
		20	51	1.0	25m			175	u5b
66	1N4849B	5	51	1.2	5.0m	95	9.6	175	DO29
67	1N4849A	10	51	1.2	5.0m	95	9.6	175	DO29
68	1N4849	20	51	1.2	5.0m	95	9.6	175	DO29
69	BZX61C51	5	51	1.3	5.0m	95	8.0	175J	DO15
70	BZX85C51	5	51	1.3	4.0m	115	8.0	175J	DO41
71	BZX87C51	5	51	1.3	5.0m	70	9.6	200J	A60al
72	BZY97C51	5	51	1.3	10m	60	12		A1rx
73	ZD51	5	51	1.3	10	60	9.0	150J	DO13
74	ZX51	5	51	1.3 §	10m	60	9.0	150J	S441
75	ZY51	5	51	1.3	10m	60	10	150J	A1bg
76	BZD10C51	6	51	1.3	10m	60	12		DO13
77	BZW22C51	6	51	1.3	10m	100	12		DO41
78	ZMY51	6	51	1.3	10m	100	10	200J	F149
79	ZPY51	11	51	1.3	10m	100	13	200J	DO41
80	1N5942D	1	51	1.5	7.3m	70		200J	DO41
81	1N5942C	2	51	1.5	7.3m	70		200J	DO41
82	1N3806B	5	51	1.5	7.4m	65	9.6	175S	C14Ø
83	1N4482	5	51	1.5	5.0m	60		175A	A60y
84	1N5942B	5	51	1.5	7.3m	70		200J	DO41
85	1S4051,A	5†	51	1.5	5.0m	41	8.5	150A	DO1
86	BZY95C51	5	51	1.5	10m	50	9.8	175J	DO1
87	BZY97C51V	5†	51	1.5	10m	60	48mV	150J	A1bg
88▼	SZ1.5-51-5-1								
		5.0	51	1.5	1.0m			175	u5b
89	1N3806A	10	51	1.5	7.4m	65	9.6	175S	C14Ø
90	1N5942A	10	51	1.5	7.3m	70		200J	DO41
91▼	SZ1.5-51-10-1								
		10	51	1.5	1.0m			175	u5b
92	1N3806	20	51	1.5	7.4m	65	9.6	175S	C14Ø
93	1N5942	20	51	1.5	7.3m	70		200J	DO41
94▼	SZ1.5-51-20-1								
		20	51	1.5	1.0m			175	u5b
95	1N4069	5	51	2.0	7.5m	110	.50	100	A1nj
96	1N4069A	5	51	2.0	7.5m	110	.20	100	A1nj
97	2EZ51D5	5	51	2.0	9.8m	48		200J	A1ay
98	2VR51,A,B	5†	51	2.0	9.8m	80			A3e
99	BZV47C51	5	51	2.0	10m	60	9.0	175J	A344r
100	LMZ51A	5	51	2.0	10m	45	9.6	150A	DO41
101	ZBC51	5†	51	2.0 §	10m	50		150A	A1bc
102	ZBC51B	5	51	2.0	10	50			A1ty
103	2EZ51D10	10	51	2.0	9.8m	48		200J	A1ay
104	LMZ51	10	51	2.0	10m	45	9.6	150A	DO41
105	ZBC51A	10	51	2.0	10	50			A1ty
106	2EZ51D	20	51	2.0	9.8m	48		200J	A1ay
107	BZV15C51	5	51	2.2	200m	7.5	9.3	150J	M754Ø
108	Z7A51	1†	51	2.5	200m	7.5	10	200J	S457Ø
109	1N5043A	5	51	2.5	12m	36	9.0	150	A1gn
110	BZX70C51	5	51	2.5	10m	55	50mV	150J	A171b
111	Z2B51	5†	51	2.5	10m	90	10	200J	DO1
112	1N5043	10	51	2.5	12m	36	9.0	150	A1gn
113	3EZ51D1	1.0	51	3.0	15m	45		150J	A1ay
114	3EZ51D2	2.0	51	3.0	15m	45		150J	A1ay
115	3EZ51D3	3.0	51	3.0	15m	45		150J	A1ay
116	3EZ51D4	4.0	51	3.0	15m	45		150J	A1ay
117	1N5086	5	51	3.0	15m	50		175A	A146u
118	3EZ51D5	5	51	3.0	15m	45		200J	A1ay
119	3VR51,A,B	5†	51	3.0	15m	45			A3al
120	BZV16C51	5	51	3.0	10m	95	9.0	175	DO3
121	MZ751	5	51	3.0	15m	50	9.5	175A	A146j
122	ZCC51	5†	51	3.0 §	15m	50		150A	A1ey
123	ZCC51B	5	51	3.0	15m	50			A1ey
124	3EZ51D10	10	51	3.0	15m	45		200J	A1ay
125	MZ851	10	51	3.0	15m	50	9.5	175A	A146j
126	ZCC51A	10	51	3.0	15m	50			A1ey
127	3EZ51D	20	51	3.0	15m	45		200J	A1ay
128	MZ951	20	51	3.0	15m	50	9.5	175A	A146j
129▼	BZT03/D51	10	51	3.2	10m	60	12	175J	A94g
130	3T51,A,B	5†	51	3.5	15m	74			DO4
131▼	SZ3-51-5-1	5.0	51	5.0	1.0m			175	u5c
132▼	SZ3-51-5-25								
		5.0	51	5.0	25m			175	u5c
133▼	SZ3-51-10-1								
		10	51	5.0	1.0m			175	u5c
134▼	SZ3-51-10-25								
		10	51	5.0	25m			175	u5c
135▼	SZ3-51-20-1								
		20	51	5.0	1.0m			175	u5c
136▼	SZ3-51-20-25								
		20	51	5.0	25m			175	u5c
137	1/4M52Z10	10†	52	250m	1.2m	200		175J	E204h
138	1S248	10	52	1.0	6.0m	70	9.0	150J	A56a
139	ZBC52	5†	52	2.0 §	9.0m	60		150A	A1bc
140	ZBC52B	5	52	2.0	9.0	60			A1ty
141	ZBC52A	10	52	2.0	9.0	60			A1ty
142	1N5044A	5	52	2.5	12m	39	9.0	150	A1gn
143	1N5044	10	52	2.5	12m	39	9.0	150	A1gn
144	ZCC52	5†	52	3.0 §	15m	60		150A	A1ey
145	ZCC52B	5	52	3.0	15m	60			A1ey
146	ZCC52A	10	52	3.0	15m	60			A1ey
147	BZV49C51	5	54	1.0	2.0m			150J	M1008
148	PR253-RT	5	55	1.0	450u	110 †			DO7
149	3KZ62	10†	55.8	3.0 §	20m		.10		A3ak§
150	TZPY56		56		10m	100	10		DO41
151	CD4758A	5.0	56		4.5m	110		200	u52
152	CD5370B	5	56		20m	35	9.1	200J	u39b
153	MMBZ5263	5	56		2.2m	150			M500
154	DSZ3056	10	56		10m	70	9.5		A266
155	1N1995B	1	56	150m	200u	700	11	150	C1
156	1N1995A	5	56	150m	200u	700	11	150	C1
157	1N1995	10	56	150m	200u	700	11	150	C1
158	1N1941B	1	56	200m	200u	700	11	150A	A82e
159	1N1941A	5	56	200m	200u	700	11	150A	A82e
160	BZX84C56	5	56	200m	2.0m	200	10	150J	M500d
161	1N1941	10	56	200m	200u	700	11	150A	A82e
162	1N732A	5	56	250m	4.0m	140	9.5	175A	DO7
163	1N4127	5	56	.25	.25m	300		200J	DO7
164	BZX60C56	5	56	250m	2.0m	700	9.0	150A	DO7
165	1/4M56Z10	10†	56	250m	1.1m	230		175J	E204h
166	1N732	10	56	250m	4.0m	140	9.5	175A	DO7
167	1N732B	20	56	.25	4.0m	140			DO7
168	PTC513	10	56	252m†	4.5m	110			A1bc
169	1N5754D	1	56	400m§	2.0m	200	8.4	200A	DO35
170	1N5754C	2	56	400m§	2.0m	200	8.4	200A	DO35
171	BZX79B56	2	56	400m§	2.0m	200	57mV	200J	DO35
172	1N979B	5	56	400m	2.2m	150		175S	A398a
173	1N5754B	5	56	400m§	2.0m	200	8.4	200A	DO35
174	BZX79C56	5	56	400m§	2.0m	200	57mV	200J	DO35
175	CD979B	5	56	400m	2.2m	150	9.6	200J	u39a
176	CD4127	5	56	400m	250u	300	9.0	200J	u39a
177	CD5263B	5	56	400m	2.2m	150	9.6	200J	u39a
178	CH979	5	56	400m	2.2m	150	9.6	200J	u10
179	CH4127	5	56	400m	250u	300	10	200J	u10
180	CH5263	5	56	400m	2.2m	150	9.6	200J	u10
181	1N979A	10	56	400m	2.2m	150		175S	A398a
182	1N979	20	56	400m	2.2m	150		175S	A398a
183	1N6018D	1	56	500m	2.0m	200		200J	DO35
184	1N6018C	2	56	500m	2.0m	200		200J	DO35
185	1N5263B	5	56	500m	2.2m	150	9.6	200A	A398a
186	1N6018B	5	56	500m	2.0m	200		200J	DO35
187	BZX46C56	5	56	500m	2.2m	150	8.0	175J	DO35
188	BZX55C56	5	56	500m	2.5m	135	8.0	175J	DO35
189	BZX83C56	5	56	500m	2.5m	150	9.0	175J	DO35
190	MLL5263B	5.0	56	500m§	2.2m	150	9.6	200J	F140
191	RD56EB	5	56	500m	5.0m	110		175J	DO35
192▼	SZP5-56-5-1								
		5.0	56	500m	1.0m			175	u5a
193▼	SZ.5-56-5-25								
		5.0	56	500m	25m			175	u5a
194	BZV55C56	7.6	56	500m	2.0m	200	57	200J	F139
195	BZV60C56	7.6	56	500m	2.0m	200	57	200J	DO34
196	1N3425	10	56	.50	1.0m	640	7.1	200A	P5
197	1N5263A	10	56	500m	2.2m	150	9.6	200A	A398a
198	1N5879A	10	56	500m	2.2m	360		150C	M859
199	1N6018A	10	56	500m	2.0m	240		200J	DO35

SYMBOLS AND CODES EXPLAINED IN INTERPRETER

2. VOLTAGE REFERENCE DIODES - $V_Z \geq 50$ V (Cont'd)

IN ORDER OF: (1) REF. VOLTAGE (2) PD MAX (3) TOLERANCE & (4) TYPE NUMBER

LINE No.	4 TYPE No.	3 TOL ± (%)	1 NOM. REF. VOLT. (V)	2 PD @ 25°C MAX (W)	TEST CUR. Izt (A)	DYN. IMP. MAX (Ω)	TEMP. COEFF Tc MAX	TEMP MAX (°C)	DWG. NO.
1	MLL5263A	10	56	500m§	2.2m	150	9.6	200J	F140
2▼	SZP5-56-10-1								
		10	56	500m	1.0m			175	u5a
3▼	SZ.5-56-10-25								
		10	56	500m	25m			175	u5a
4	1N5263	20†	56	.50	2.2m			200A	A398a
5	1N6018	20	56	500m	2.0m	240		200J	DO35
6	MLL5263	20	56	500m§	2.2m	150		200J	F140
7▼	SZP5-56-20-1								
		20	56	500m	1.0m			175	u5a
8▼	SZ.5-56-20-25								
		20	56	500m	25m			175	u5a
9	1N3697B	5	56	750m§	2.2m	150		175S	A1az
10	1N3697A	10	56	750m§	2.2m	150		175S	A1az
11	1N3697	20	56	750m§	2.2m	150		175S	A1az
12	BZX78C56		56	1.0	5.0m	80	56mV		
13	Z4A56	1†	56	1.0	5.0m	100	10	200J	DO29
14	1N1789A	5	56	1.0	15m	88		175A	DO13⌀
15	1N1885A	5	56	1.0	8.0m	75	7.5	200C	A41e
16	1N3038B	5	56	1.0	4.5m	110		175A	A31a
17	1N4180B	5	56	1.0 §	4.5m	110		200S	DO29
18	1N4345B	5	56	1.0	4.5m	110	9.0	300S	DO7
19	1N4422B	5	56	1.0	4.5m	33	9.0	175A	A1cm
20	1N4758A	5	56	1.0	4.5m	110		200A	DO41
21	1N5581B	5	56	1.0 §	4.5m	110		200A	A60ac
22	BZV85C56	5	56	1.0	4.0m	150	55mV	200J	DO41
23	CD4758	5	56	1.0	4.5m	110	9.6	200J	u39a
24	CH4758	5	56	1.0	4.5m	110	9.0	200J	u10
25	PL56Z	5	56	1.0	10m	60	9.0	150J	
26	RD56FB	5	56	1.0	10m	50		175J	A297c
27▼	SZ1-56-5-1	5.0	56	1.0	1.0m			175	u5b
28▼	SZ1-56-5-25								
		5.0	56	1.0	25m			175	u5b
29	TZB56B	5	56	1.0 §	1.0m		10	175A	A1ty
30	UZ8756	5	56	1.0	4.5m	110	9.5	175	A380
31	VR56,A,B	5†	56	1.0	4.5m	110		125A	A1b
32	Z4B56	5†	56	1.0	5.0m	100	10	200J	DO29
33	ZB56	5†	56	1.0 §	4.5m	110		150A	A1bc
34	ZB56B	5	56	1.0	4.5m	110		100C	A1bc
35	1N1789	10	56	1.0	15m	88		175A	DO13⌀
36	1N1885	10	56	1.0	8.0m	75	7.5	200C	A41e
37	1N3038A	10	56	1.0	4.5m	110		175A	A31a
38	1N4180A	10	56	1.0 §	4.5m	110		200S	DO29
39	1N4345A	10	56	1.0	4.5m	110	9.0	300S	DO7
40	1N4422A	10	56	1.0	4.5m	33	9.0	175A	A1cm
41	1N4758	10	56	1.0	4.5m	110		200A	DO41
42	1N5581A	10	56	1.0 §	4.5m	110		200A	A60ac
43	1S249	10	56	1.0	6.0m	80	8.9	150J	A56a
44▼	SZ1-56-10-1								
		10	56	1.0	1.0m			175	u5b
45▼	SZ1-56-10-25								
		10	56	1.0	25m			175	u5b
46	TZB56A	10	56	1.0 §	1.0m		10	175A	A1ty
47	UZ8856	10	56	1.0	4.5m	110	9.5	175	A380
48	ZB56A	10	56	1.0	4.5m	110		100C	A1bc
49	1N3038	20	56	1.0	4.5m	110		175A	A31a
50	1N4180	20	56	1.0 §	4.5m	110		200S	DO29
51	1N4345	20	56	1.0	4.5m	110	9.0	300S	DO7
52	1N4422	20	56	1.0	4.5m	33		175S	A266a
53	1N5581	20	56	1.0 §	4.5			200A	A60ac
54▼	SZ1-56-20-1								
		20	56	1.0	1.0m			175	u5b
55▼	SZ1-56-20-25								
		20	56	1.0	25m			175	u5b
56	1N4850B	5	56	1.2	4.5m	110	9.6	175	DO29
57	1N4850A	10	56	1.2	4.5m	110	9.6	175	DO29
58	1N4850	20	56	1.2	4.5m	110	9.6	175	DO29
59	BZW22C56	5	56	1.3	10m	100		175S	DO41
60	BZX61C56	5	56	1.3	5.0m	105	8.0	175J	DO15
61	BZX85C56	5	56	1.3	4.0m	120	8.0	175J	DO41
62	BZX87C56	5	56	1.3	5.0m	80	9.8	200J	A60al
63	BZY97C56	5	56	1.3	10m	60	12		A1rx
64	ZD56	5	56	1.3	10	60	9.5	150J	DO13
65	ZY56	5	56	1.3	10m	60	10	150J	A1bg
66	BZD10C56	7	56	1.3	10m	60	12		DO13
67	ZMY56	7	56	1.3	10m	100	10	200J	F149
68	ZPY56	14	56	1.3	10m	100	13	200J	DO41
69	1N5943D	1	56	1.5	6.7m	86		200J	DO41
70	1N5943C	2	56	1.5	6.7m	86		200J	DO41
71	1N3807B	5	56	1.5	6.7m	75	9.6	175S	C14⌀
72	1N4483	5	56	1.5	4.5m	70		175A	A60y
73	1N5943B	5	56	1.5	6.7m	86		200J	DO41
74	1S4056,A	5†	56	1.5	5.0m	46	8.5	150A	DO1
75	BZY95C56	5	56	1.5	10m	55	9.8	175J	DO1
76	BZY97C56V	5†	56	1.5	10m	60	53mV	150J	A1bg
77▼	SZ1.5-56-5-1								
		5.0	56	1.5	1.0m			175	u5b
78	1N3807A	10	56	1.5	6.7m	75	9.6	175S	C14⌀
79	1N5943A	10	56	1.5	6.7m	86		200J	DO41
80▼	SZ1.5-56-10-1								
		10	56	1.5	1.0m			175	u5b
81	1N3807	20	56	1.5	6.7m	75	9.6	175S	C14⌀
82	1N5943	20	56	1.5	6.7m	86		200J	DO41
83▼	SZ1.5-56-20-1								
		20	56	1.5	1.0m			175	u5b
84	1N4070	5	56	2.0	7.5m	120	.50	100	A1ss
85	1N4070A	5	56	2.0	7.5m	120	.20	100	A1nj
86	2EZ56D5	5	56	2.0	9.0m	55		200J	A1ay
87	2VR56,A,B	5†	56	2.0	8.8m	90			A3e
88	BZV47C56	5	56	2.0	10m	60	9.0	175J	A344r
89	LMZ56A	5	56	2.0	9.0m	55	9.6	150A	DO41
90	ZBC56	5†	56	2.0 §	9.0m	70		150A	A1bc
91	ZBC56B	5	56	2.0	9.0	70			A1ty
92	2EZ56D10	10	56	2.0	9.0m	55		200J	A1ay
93	LMZ56	10	56	2.0	9.0m	55	9.6	150A	DO41
94	ZBC56A	10	56	2.0	9.0	70			A1ty
95	2EZ56D	20	56	2.0	9.0m	55		200J	A1ay
96	BZV15C56	5	56	2.2	200m	8.0	9.4	150J	M754⌀
97	Z7A56	1†	56	2.5	200m	8.0	10	200J	S457⌀
98	1N5045A	5	56	2.5	11m	45	9.0	150	A1gn
99	BZX70C56	5	56	2.5	10m	63	55mV	150J	A171b
100	Z2B56	5†	56	2.5	10m	100	10	200J	DO1
101	1N5045	10	56	2.5	11m	45	9.0	150	A1gn
102	3EZ56D1	1.0	56	3.0	13m	50		150J	A1ay
103	3EZ56D2	2.0	56	3.0	13m	50		150J	A1ay
104	3EZ56D3	3.0	56	3.0	13m	50		150J	A1ay
105	3EZ56D4	4.0	56	3.0	13m	50		150J	A1ay
106	1N5087	5	56	3.0	10m	70		175A	A146u
107	3EZ56D5	5	56	3.0	13m	50		200J	A1ay
108	3VR56,A,B	5†	56	3.0	13m	55			A3al
109	BZV16C56	5	56	3.0	9.0m	110	9.0	175	DO3
110	MZ756	5	56	3.0	10m	70	9.5	175A	A146j
111	UZ756	5	56	3.0	10m	70	9.5	175A	A380
112	ZCC56	5†	56	3.0 §	10m	70		150A	A1ey
113	ZCC56B	5	56	3.0	10m	70			A1ey
114	3EZ56D10	10	56	3.0	13m	50		200J	A1ay
115	MZ856	10	56	3.0	10m	70	9.5	175A	A146j
116	UZ856	10	56	3.0	10m	70	9.5	175A	A380
117	ZCC56A	10	56	3.0	10m	70			A1ey
118	3EZ56D	20	56	3.0	13m	50		200J	A1ay
119	MZ956	20	56	3.0	10m	70	9.5	175A	A146j
120	UZ956	20	56	3.0	10m	70	9.5	175A	A380
121	BZT03C56	5.0	56	3.2	10m	60	1.2	175J	A333c
122▼	BZT03/D56	10	56	3.2	10m	60	12	175J	A94g
123	3T56,A,B	5†	56	3.5	15m	88			DO4
124▼	SZ3-56-5-25								
		5.0	56	5.0	25m			175	u5c
125▼	SZ3-56-10-1								
		10	56	5.0	1.0m			175	u5c
126▼	SZ3-56-10-25								
		10	56	5.0	25m			175	u5c
127▼	SZ3-56-20-1								
		20	56	5.0	1.0m			175	u5c
128▼	SZ3-56-20-25								
		20	56	5.0	25m			175	u5c
129	1N1968	10	56.5	400m	200u	700 †	10		A82e
130	BZX55C51	5	57	500m	2.5m	125	8.0	175J	DO35
131	1N1885B	1	57	1.0	8.0m	30 †	7.5	175A	DO13
132	1N1323A	5	58	150m	200u			150A	C1
133	1N1323	10	58	150m	200u			150A	C1
134	PS6323	15	58	.50		.20		200A	DO14
135	PS1507	5	58.8	.25	10m	105	.20	150A	A1gc
136	PS1507A	5	58.8	.25	10m	105	.10	150A	A1gc
137	CD5371B	5	60		20m	40	9.2	200J	u39b
138	DSZ3060	10	60		10m	70	9.5		A266
139	1N4128	5	60	.25	.25m	400		200J	DO7
140	CD4128	5	60	400m	250u	400	9.0	200J	u39a
141	CD5264B	5	60	400m	2.1m	170	9.7	200J	u39a
142	CH4128	5	60	400m	250u	400	10	200J	u10
143	CH5264	5	60	400m	2.1m	170	9.7	200J	u10
144	1N5264B	5	60	500m	2.1m	170	9.7	200A	A398a
145	MLL5264B	5.0	60	500m§	2.1m	170	9.7	200J	F140
146	1N5264A	10	60	500m	2.1m	170	9.7	200A	A398a
147	1N5880A	10	60	500m	2.1m	410		150C	M859
148	MLL5264A	10	60	500m§	2.1m	170	9.7	200J	F140
149	1N5264	20†	60	.50	2.1m			200A	A398a
150	MLL5264	20	60	500m§	2.1m	170		200J	F140
151	ZS60	5†	60	750m	5.5m	130	500m	150A	C3j
152	BZV49C56	5	60	1.0	2.0m			150J	M1008
153	UZ8760	5	60	1.0	4.0m	125	9.5	175	A380
154	UZ8860	10	60	1.0	4.0m	125	9.5	175	A380
155	1N5088	5	60	3.0	10m	70		175A	A146u
156	MZ760	5	60	3.0	10m	70	9.5	175A	A146j
157	UDZ760	5	60	3.0	10m	70		175A	A356a
158	UZ760	5	60	3.0	10m	70	9.5	175A	A380
159	MZ860	10	60	3.0	10m	70	9.5	175A	A146j
160	UZ860	10	60	3.0	10m	70	9.5	175A	A380
161	MZ960	20	60	3.0	10m	70	9.5	175A	A146j
162	UZ960	20	60	3.0	10m	70	9.5	175A	A380
163	3KZ66	10†	61.2	3.0 §	20m		.10		A3ak§
164	TZPY62		62		10m	130	11		DO41
165	CD4759A	5.0	62		4.0m	125		200	u52
166	CD5372B	5	62		20m	42	9.2	200J	u39b
167	MMBZ5265	5	62		2.0m	185			M500
168	DSZ3062	10	62		10m	90	9.5		A266
169	BZX84C62	5	62	200m	2.0m	215	10	150J	M500d
170	PTC514	10	62	248m†	4.0m	125			A1bc
171	1N733A	5	62	250m	2.0m	170	9.6	175A	DO7
172	1N4129	5	62	.25	.25m	500		200J	DO7
173	BZV43C	5	62	250m§	5	20		100	DO35
174	BZV44C	5	62	250m§	5	20		100	DO35
175	BZV45C	5	62	250m§	5	20		100	DO35
176	1/4M62Z10	10†	62	250m	1.0m	290		175J	E204h
177	1N733	10	62	250m	2.0m	170	9.6	175A	DO7
178	1N733B	20	62	.25	2.0m	170			DO7
179	1N5755D	1	62	400m§	2.0m	215	8.2	200A	DO35
180	1N5755C	2	62	400m§	2.0m	215	8.2	200A	DO35
181	BZX79B62	2	62	400m§	2.0m	215	64mV	200J	DO35
182	1N980B	5	62	400m	2.0m	185		175S	A398a
183	1N5755B	5	62	400m§	2.0m	215	8.2	200A	DO35
184	BZX79C62	5	62	400m§	2.0m	215	64mV	200J	DO35
185	CD980B	5	62	400m	2.0m	185	9.7	200J	u39a
186	CD4129	5	62	400m	250u	500	9.0	200J	u39a
187	CD5265B	5	62	400m	2.0m	185	9.7	200J	u39a
188	CH980	5	62	400m	2.0m	185	9.7	200J	u10
189	CH4129	5	62	400m	250u	500	10	200J	u10
190	CH5265	5	62	400m	2.0m	185	9.7	200J	u10
191	1N980A	10	62	400m	2.0m	185		175S	A398a
192	1N980	20	62	400m	2.0m	185		175S	A398a
193	1N6019D	1	62	500m	2.0m	225		200J	DO35
194	1N6019C	2	62	500m	2.0m	225		200J	DO35
195	1N5265B	5	62	500m	2.0m	185	9.7	200A	A398a
196	1N6019B	5	62	500m	2.0m	225		200J	DO35
197	BZX46C62	5	62	500m	2.0m	185	8.0	175J	DO35
198	BZX55C62	5	62	500m	2.5m	150	8.0	175J	DO35
199	BZX83C62	5	62	500m	2.5m	170	9.0	175J	DO35
200	MLL5265B	5.0	62	500m§	2.0m	185	9.7	200J	F140
201	RD62EB	5	62	500m	2.0m	200		175J	DO35
202▼	SZP5-62-5-1								
		5.0	62	500m	1.0m			175	u5a

SYMBOLS AND CODES EXPLAINED IN INTERPRETER

2. VOLTAGE REFERENCE DIODES - $V_Z \geq 50$ V (Cont'd)

IN ORDER OF: (1) REF. VOLTAGE (2) PD MAX (3) TOLERANCE & (4) TYPE NUMBER

LINE No.	4 TYPE No.	3 TOL ± (%)	1 NOM. REF. VOLT. (V)	2 PD @ 25°C MAX (W)	TEST CUR. Izt (A)	DYN. IMP. MAX (Ω)	TEMP. COEFF Tc MAX	TEMP MAX (°C)	DWG. NO.
1▼	SZ.5-62-5-25								
		5.0	62	500m	25m			175	u5a
2	BZV55C62	6.8	62	500m	2.0m	215	64	200J	F139
3	BZV60C62	6.8	62	500m	2.0m	215	64	200J	DO34
4	1N5265A	10	62	500m	2.0m	185	9.7	200A	A398a
5	1N5881A	10	62	500m	2.0m	430		150C	M859
6	1N6019A	10	62	500m	2.0m	265		200J	DO35
7	MLL5265A	10	62	500m§	2.0m	185	9.7	200J	F140
8	MZ5862	10	62.0	.5	20m	500	10.	175J	A60as
9▼	SZP5-62-10-1								
		10	62	500m	1.0m			175	u5a
10▼	SZ.5-62-10-25								
		10	62	500m	25m			175	u5a
11	1N5265	20†	62	.50	2.0m			200A	A398a
12	1N6019	20	62	500m	2.0m	265		200J	DO35
13	MLL5265	20	62	500m§	2.0m	185		200J	F140
14▼	SZP5-62-20-1								
		20	62	500m	1.0m			175	u5a
15▼	SZ.5-62-20-25								
		20	62	500m	25m			175	u5a
16	1N3698B	5	62	750m§	2.0m	185		175S	A1az
17	1N3698A	10	62	750m§	2.0m	185		175S	A1az
18	1N3698	20	62	750m§	2.0m	185		175S	A1az
19	BZX78C62		62	1.0	5.0m	90	63mV		
20	Z4A62	1†	62	1.0	5.0m	110	11	200J	DO29
21	1N1790A	5	62	1.0	5.0m	105		175A	DO13☑
22	1N3039B	5	62	1.0	4.0m	125		175A	A31a
23	1N4181B	5	62	1.0 §	4.0m	125		200S	DO29
24	1N4346B	5	62	1.0	4.0m	125	9.0	300S	DO7
25	1N4423B	5	62	1.0	4.0m	40	9.0	175A	A1cm
26	1N4759A	5	62	1.0	4.0m	125		200A	DO41
27	1N5582B	5	62	1.0 §	4.0m	125		200A	A60ac
28	BZV85C62	5	62	1.0	4.0m	175	62mV	200J	DO41
29	CD4759	5	62	1.0	4.0m	125	9.7	200J	u39a
30	CH4759	5	62	1.0	4.0m	125	9.0	200J	u10
31	PL62Z	5	62	1.0	10m	80	9.0	150J	
32	PR254-RT	5	62	1.0	400u	125 †			DO7
33	RD62FB	5	62	1.0	10m	50		175J	A297c
34▼	SZ1-62-5-1	5.0	62	1.0	1.0m			175	u5b
35▼	SZ1-62-5-25								
		5.0	62	1.0	25m			175	u5b
36	TZB62B	5	62	1.0 §	1.0m		10	175A	A1ty
37	VR62,A,B	5†	62	1.0	4.0m	125		125A	A1b
38	Z4B62	5†	62	1.0	5.0m	110	11	200J	DO29
39	ZB62	5†	62	1.0 §	4.0m	125		150A	A1bc
40	ZB62B	5	62	1.0	4.0m	125		100C	A1bc
41	1N1790	10	62	1.0	5.0m	105		175A	DO13☑
42	1N3039A	10	62	1.0	4.0m	125		175A	A31a
43	1N4181A	10	62	1.0 §	4.0m	125		200S	DO29
44	1N4346A	10	62	1.0	4.0m	125	9.0	300S	DO7
45	1N4423A	10	62	1.0	4.0m	40	9.0	175A	A1cm
46	1N4759	10	62	1.0	4.0m	125		200A	DO41
47	1N5582A	10	62	1.0 §	4.0m	125		200A	A60ac
48	1S250	10	62	1.0	4.0m	100	8.9	150J	A56a
49▼	SZ1-62-10-1								
		10	62	1.0	1.0m			175	u5b
50▼	SZ1-62-10-25								
		10	62	1.0	25m			175	u5b
51	TZB62A	10	62	1.0 §	1.0m		10	175A	A1ty
52	ZB62A	10	62	1.0	4.0m	125		100C	A1bc
53	1N3039	20	62	1.0	4.0m	125		175A	A31a
54	1N4181	20	62	1.0 §	4.0m	125		200S	DO29
55	1N4346	20	62	1.0	4.0m	125	9.0	300S	DO7
56	1N4423	20	62	1.0	4.0m	40		175S	A266a
57	1N5582	20	62	1.0 §	4.0			200A	A60ac
58▼	SZ1-62-20-1								
		20	62	1.0	1.0m			175	u5b
59▼	SZ1-62-20-25								
		20	62	1.0	25m			175	u5b
60	1N4851B	5	62	1.2	4.0m	125	9.7	175	DO29
61	1N4851A	10	62	1.2	4.0m	125	9.7	175	DO29
62	1N4851	20	62	1.2	4.0m	125	9.7	175	DO29
63	BZW22C62	5	62	1.3	10m	130		175S	DO41
64	BZX61C62	5	62	1.3	5.0m	110	8.0	175J	DO15
65	BZX85C62	5	62	1.3	4.0m	125	8.0	175J	DO41
66	BZX87C62	5	62	1.3	5.0m	90	9.8	200J	A60al
67	BZY97C62	5	62	1.3	10m	80	12		A1rx
68	ZD62	5	62	1.3	10	80	9.5	150J	DO13
69	ZY62	5	62	1.3	10m	80	10	150J	A1bg
70	BZD10C62	6	62	1.3	10m	80	12		DO13
71	ZMY62	6	62	1.3	10m	130	10	200J	F149
72	ZPY62	12	62	1.3	10m	130	13	200J	DO41
73	1N5944D	1	62	1.5	6.0m	100		200J	DO41
74	1N5944C	2	62	1.5	6.0m	100		200J	DO41
75	1N3808B	5	62	1.5	6.0m	85	9.7	175S	C14☑
76	1N4484	5	62	1.5	4.0m	80		175A	A60y
77	1N5944B	5	62	1.5	6.0m	100		200J	DO41
78	1S4062,A	5†	62	1.5	5.0m	52	8.5	150A	DO1
79	BZY95C62	5	62	1.5	10m	60	9.6	175J	DO1
80	BZY97C62V	5†	62	1.5	10m	80	65mV	150J	A1bg
81▼	SZ1.5-62-5-1								
		5.0	62	1.5	1.0m			175	u5b
82	1N3808A	10	62	1.5	6.0m	85	9.7	175S	C14☑
83	1N5944A	10	62	1.5	6.0m	100		200J	DO41
84▼	SZ1.5-62-10-1								
		10	62	1.5	1.0m			175	u5b
85	1N3808	20	62	1.5	6.0m	85	9.7	175S	C14☑
86	1N5944	20	62	1.5	6.0m	100		200J	DO41
87▼	SZ1.5-62-20-1								
		20	62	1.5	1.0m			175	u5b
88	1N4071	5	62	2.0	7.5m	135	.50	100	A1nj
89	1N4071A	5	62	2.0	7.5m	135	.20	100	A1nj
90	2EZ62D5	5	62	2.0	8.1m	60		200J	A1ay
91	2VR62,A,B	5†	62	2.0	8.1m	110			A3e
92	BZV47C62	5	62	2.0	10m	80	9.0	175J	A344r
93	LMZ62A	5	62	2.0	8.0m	60	9.7	150A	DO41
94	ZBC62	5†	62	2.0 §	8.0m	75		150A	A1bc
95	ZBC62B	5	62	2.0	8.0	75			A1ty
96	2EZ62D10	10	62	2.0	8.1m	60		200J	A1ay
97	LMZ62	10	62	2.0	8.0m	60	9.7	150A	DO41
98	ZBC62A	10	62	2.0	8.0	75			A1ty
99	2EZ62D	20	62	2.0	8.1m	60		200J	A1ay
100	BZV15C62	5	62	2.2	200m	9.0	9.4	150J	M754☑
101	Z7A62	1†	62	2.5	200m	9.0	11	200J	S457☑
102	1N5046A	5	62	2.5	10m	51	9.0	150	A1gn
103	BZX70C62	5	62	2.5	10m	75	60mV	150J	A171b
104	Z2B62	5†	62	2.5	10m	110	11	200J	DO1
105	1N5046	10	62	2.5	10m	51	9.0	150	A1gn
106	3EZ62D1	1.0	62	3.0	12m	55		150J	A1ay
107	3EZ62D2	2.0	62	3.0	12m	55		150J	A1ay
108	3EZ62D3	3.0	62	3.0	12m	55		150J	A1ay
109	3EZ62D4	4.0	62	3.0	12m	55		150J	A1ay
110	1N5089	5	62	3.0	10m	75		175A	A146u
111	3EZ62D5	5	62	3.0	12m	55		200J	A1ay
112	3VR62,A,B	5†	62	3.0	12m	65			A3al
113	BZV16C62	5	62	3.0	8.0m	125	9.0	175	DO3
114	MZ762	5	62	3.0	10m	75	9.5	175A	A146j
115	ZCC62	5†	62	3.0 §	10m	75		150A	A1ey
116	ZCC62B	5	62	3.0	10m	75			A1ey
117	3EZ62D10	10	62	3.0	12m	55		200J	A1ay
118	MZ862	10	62	3.0	10m	75	9.5	175A	A146j
119	ZCC62A	10	62	3.0	10m	75			A1ey
120	3EZ62D	20	62	3.0	12m	55		200J	A1ay
121	MZ962	20	62	3.0	10m	75	9.5	175A	A146j
122▼	BZT03/D62	10	62	3.2	10m	80	13	175J	A94g
123	3T62,A,B	5†	62	3.5	5.0m	105			DO4
124▼	SZ3-62-5-1	5.0	62	5.0	1.0m			175	u5c
125▼	SZ3-62-5-25								
		5.0	62	5.0	25m			175	u5c
126▼	SZ3-62-10-1								
		10	62	5.0	1.0m			175	u5c
127▼	SZ3-62-10-25								
		10	62	5.0	25m			175	u5c
128▼	SZ3-62-20-1								
		20	62	5.0	1.0m			175	u5c
129▼	SZ3-62-20-25								
		20	62	5.0	25m			175	u5c
130	BZV49C62	5	66	1.0	2.0m			150J	M1008
131	VR67,A,B	5†	67	1.0	2.0m	200	9.5	125C	A1ex
132	2VR67,A,B	5†	67	2.0	2.0m	200			A3e
133	3VR67,A,B	5†	67	3.0	30m	30			A3al
134	PS1508	5	67.2	.25	10m	120	.20	150A	A1gc
135	PS1508A	5	67.2	.25	10m	120	.10	150A	A1gc
136	3KZ75	10†	67.5	3.0 §	20m		.10		A3ak§
137	TZPY68		68		10m	130	11		DO41
138	CD4760A	5.0	68		3.7m	150		200	u52
139	1N1996B	1	68	150m	200u	900	11	150	C1
140	1N1996A	5	68	150m	200u	900	11	150	C1
141	1N1996	10	68	150m	200u	900	11	150	C1
142	1N1942B	1	68	200m	200u	900	11	150A	A82e
143	1N1942A	5	68	200m	200u	900	11	150A	A82e
144	BZX84C68	5	68	200m	2.0m	240	10	150J	M500d
145	1N1942	10	68	200m	200u	900	11	150A	A82e
146	1N734A	5	68	250m	2.0m	200	9.6	175A	DO7
147	1N4130	5	68	.25	.25m	700		200J	DO7
148	1/4M68Z10	10†	68	250m	920u	350		175J	E204h
149	1N734	10	68	250m	2.0m	200	9.6	175A	DO7
150	1N734B	20	68	.25	2.0m	200			DO7
151	1N5756D	1	68	400m§	2.0m	240	8.2	200A	DO35
152	1N5756C	2	68	400m§	2.0m	240	8.2	200A	DO35
153	BZX79B68	2	68	400m§	2.0m	240	71mV	200J	DO35
154	1N670	5	68	.40	1.0m	290	9.0	200S	A31b
155	1N981B	5	68	400m	1.8m	230		175S	A398a
156	1N5756B	5	68	400m§	2.0m	240	8.2	200A	DO35
157	BZX79C68	5	68	400m§	2.0m	240	71mV	200J	DO35
158	CD981B	5	68	400m	1.8m	230	9.7	200J	u39a
159	CD4130	5	68	400m	250u	700	9.5	200J	u39a
160	CD5266B	5	68	400m	1.8m	230	9.7	200J	u39a
161	CH981	5	68	400m	1.8m	230	9.7	200J	u10
162	CH4130	5	68	400m	250u	700	10	200J	u10
163	CH5266	5	68	400m	1.8m	230	9.7	200J	u10
164	1N981A	10	68	400m	1.8m	230		175S	A398a
165	1N981	20	68	400m	1.8m	230		175S	A398a
166	1N6020D	1	68	500m	2.0m	240		200J	DO35
167	1N6020C	2	68	500m	2.0m	240		200J	DO35
168	1N5266B	5	68	500m	1.8m	230	9.7	200A	A398a
169	1N6020B	5	68	500m	2.0m	240		200J	DO35
170	BZX46C68	5	68	500m	1.8m	215	9.0	175J	DO35
171	BZX83C68	5	68	500m	250m	215	9.0	175J	DO35
172	MLL5266B	5.0	68	500m§	1.8m	230	9.7	200J	F140
173	RD68EB	5	68	500m	2.0m	200		175J	DO35
174▼	SZP5-68-5-1								
		5.0	68	500m	1.0m			175	u5a
175▼	SZ.5-68-5-25								
		5.0	68	500m	25m			175	u5a
176	BZX55C68	6	68	500m	2.5m	180		200J	A277c
177	BZV55C68	6.2	68	500m	2.0m	240	71	200J	F139
178	BZV60C68	6.2	68	500m	2.0m	240	71	200J	DO34
179	1N3426	10	68	.50	1.0m	800	7.4	200A	P5
180	1N5266A	10	68	500m	1.8m	230	9.7	200A	A398a
181	1N5882A	10	68	500m	1.8m	520		150C	M859
182	1N6020A	10	68	500m	2.0m	280		200J	DO35
183	MLL5266A	10	68	500m§	1.8m	230	9.7	200J	F140
184▼	SZP5-68-10-1								
		10	68	500m	1.0m			175	u5a
185▼	SZ.5-68-10-25								
		10	68	500m	25m			175	u5a
186	1N5266	20†	68	.50	1.8m			200A	A398a
187	1N6020	20	68	500m	2.0m	280		200J	DO35
188	MLL5266	20	68	500m§	1.8m	230		200J	F140
189▼	SZP5-68-20-1								
		20	68	500m	1.0m			175	u5a
190▼	SZ.5-68-20-25								
		20	68	500m	25m			175	u5a
191	1N3699B	5	68	750m§	1.8m	230		175S	A1az
192	1N3699A	10	68	750m§	1.8m	230		175S	A1az
193	1N3699	20	68	750m§	1.8m	230		175S	A1az
194	BZX78C68		68	1.0	5.0m	110	70mV		
195	Z4A68	1†	68	1.0	5.0m	120	11	200J	DO29
196	1N1431	5	68	1.0	2.0m	150 †	9.0	200A	A154

SYMBOLS AND CODES EXPLAINED IN INTERPRETER

2. VOLTAGE REFERENCE DIODES - $V_Z \geq 50$ V (Cont'd)

IN ORDER OF: (1) REF. VOLTAGE (2) PD MAX (3) TOLERANCE & (4) TYPE NUMBER

LINE No.	4 TYPE No.	3 TOL ± (%)	1 NOM. REF. VOLT. (V)	2 PD @ 25°C MAX (W)	TEST CUR. Izt (A)	DYN. IMP. MAX (Ω)	TEMP. COEFF Tc MAX	TEMP MAX (°C)	DWG. NO.
1	1N1791A	5	68	1.0	5.0m	125		175A	DO13⊘
2	1N1886A	5	68	1.0	3.0m	250	8.0	200C	A41e
3	1N3040B	5	68	1.0	3.7m	150		175A	A31a
4	1N4182B	5	68	1.0 §	3.7m	150		200S	DO29
5	1N4347B	5	68	1.0	3.7m	150	9.0	300S	DO7
6	1N4424B	5	68	1.0	3.7m	44	9.0	175A	A1cm
7	1N4760A	5	68	1.0	3.7m	150		200A	DO41
8	1N5583B	5	68	1.0 §	3.7m	150		200A	A60ac
9	BZV85C68	5	68	1.0	4.0m	200	71mV	200J	DO41
10	CD4760	5	68	1.0	3.7m	150	9.7	200J	u39a
11	CH4760	5	68	1.0	3.7m	150	9.0	200J	u10
12	PL68Z	5	68	1.0	10m	80	9.0	150J	
13	RD68FB	5	68	1.0	10m	75		175J	A297c
14▼	SZ1-68-5-1	5.0	68	1.0	1.0m			175	u5b
15▼	SZ1-68-5-25								
		5.0	68	1.0	25m			175	u5b
16	TZB68B	5	68	1.0 §	1.0m		10	175A	A1ty
17	VR68,A,B	5†	68	1.0	3.7m	150		125A	A1b
18	Z4B68	5†	68	1.0	5.0m	120	11	200J	DO29
19	ZB68	5†	68	1.0 §	3.7m	150		150A	A1bc
20	ZB68B	5	68	1.0	3.7m	150		100C	A1bc
21	1N1791	10	68	1.0	5.0m	125		175A	DO13⊘
22	1N1886	10	68	1.0	3.0m	250	8.0	200C	A41e
23	1N3040A	10	68	1.0	3.7m	150		175A	A31a
24	1N4182A	10	68	1.0 §	3.7m	150		200S	DO29
25	1N4347A	10	68	1.0	3.7m	150	9.0	300S	DO7
26	1N4424A	10	68	1.0	3.7m	44	9.0	175A	A1cm
27	1N4760	10	68	1.0	3.7m	150		200A	DO41
28	1N5583A	10	68	1.0 §	3.7m	150		200A	A60ac
29	1S251	10	68	1.0	4.0m	120	9.1	150J	A56a
30▼	SZ1-68-10-1								
		10	68	1.0	1.0m			175	u5b
31▼	SZ1-68-10-25								
		10	68	1.0	25m			175	u5b
32	TZB68A	10	68	1.0 §	1.0m		10	175A	A1ty
33	ZB68A	10	68	1.0	3.7m	150		100C	A1bc
34	1N3040	20	68	1.0	3.7m	150		175A	A31a
35	1N4182	20	68	1.0 §	3.7m	150		200S	DO29
36	1N4347	20	68	1.0	3.7m	150	9.0	300S	DO7
37	1N4424	20	68	1.0	3.7m	44		175S	A266a
38	1N5583	20	68	1.0 §	3.7			200A	A60ac
39▼	SZ1-68-20-1								
		20	68	1.0	1.0m			175	u5b
40▼	SZ1-68-20-25								
		20	68	1.0	25m			175	u5b
41	1N4852B	5	68	1.2	3.7m	150	9.7	175	DO29
42	1N4852A	10	68	1.2	3.7m	150	9.7	175	DO29
43	1N4852	20	68	1.2	3.7m	150	9.7	175	DO29
44	BZW22C68	5	68	1.3	10m	130		175S	DO41
45	BZX61C68	5	68	1.3	5.0m	120	8.0	175J	DO15
46	BZX85C68	5	68	1.3	3.7m	150	9.6	175J	DO41
47	BZX87C68	5	68	1.3	5.0m	110	10	200J	A60al
48	BZY97C68	5	68	1.3	10m	80	12		A1ay
49	ZD68	5	68	1.3	10	80	9.5	150J	DO13
50	ZY68	5	68	1.3	10m	80	10	150J	A1bg
51	BZD10C68	6	68	1.3	10m	80	12		DO13
52	ZMY68	6	68	1.3	10m	130	10	200J	F149
53	ZPY68	11	68	1.3	10m	130	13	200J	DO41
54	1N5945D	1	68	1.5	5.5m	120		200J	DO41
55	1N5945C	2	68	1.5	5.5m	120		200J	DO41
56	1N3809B	5	68	1.5	5.5m	95	9.7	175S	C14⊘
57	1N4485	5	68	1.5	3.7m	100		175A	A60y
58	1N5945B	5	68	1.5	5.5m	120		200J	DO41
59	1S4068,A	5†	68	1.5	5.0m	60	8.5	150A	DO1
60	BZY95C68	5	68	1.5	10m	65	9.5	175J	DO1
61	BZY97C68V	5†	68	1.5	10m	80	71mV	150J	A1bg
62▼	SZ1.5-68-5-1								
		5.0	68	1.5	1.0m			175	u5b
63	1N3809A	10	68	1.5	5.5m	95	9.7	175S	C14⊘
64	1N5945A	10	68	1.5	5.5m	120		200J	DO41
65▼	SZ1.5-68-10-1								
		10	68	1.5	1.0m			175	u5b
66	1N3809	20	68	1.5	5.5m	95	9.7	175S	C14⊘
67	1N5945	20	68	1.5	5.5m	120		200J	DO41
68▼	SZ1.5-68-20-1								
		20	68	1.5	1.0m			175	u5b
69	1N4072	5	68	2.0	5.0m	230	.50	100	A1nj
70	1N4072A	5	68	2.0	5.0m	230	.20	100	A1nj
71	2EZ68D5	5	68	2.0	7.4m	75		200J	A1ay
72	2VR68,A,B	5†	68	2.0	7.4m	125			A3e
73	BZV47C68	5	68	2.0	10m	80	9.0	175J	A344r
74	LMZ68A	5	68	2.0	7.5m	75	9.7	150A	DO41
75	ZBC68	5†	68	2.0 §	7.4m	85		150A	A1bc
76	ZBC68B	5	68	2.0	7.4	85			A1ty
77	2EZ68D10	10	68	2.0	7.4m	75		200J	A1ay
78	LMZ68	10	68	2.0	7.5m	75	9.7	150A	DO41
79	ZBC68A	10	68	2.0	7.4	85			A1ty
80	2EZ68D	20	68	2.0	7.4m	75		200J	A1ay
81	BZV15C68	5	68	2.2	200m	10	9.4	150J	M754⊘
82	Z7A68	1†	68	2.5	200m	10	11	200J	S457⊘
83	1N5047A	5	68	2.5	9.2m	57	9.0	150	A1gn
84	BZX70C68	5	68	2.5	10m	90	65mV	150J	A171b
85	Z2B68	5†	68	2.5	10m	120	11	200J	DO1
86	1N5047	10	68	2.5	9.2m	57	9.0	150	A1gn
87	3EZ68D1	1.0	68	3.0	11m	70		150J	A1ay
88	3EZ68D2	2.0	68	3.0	11m	70		150J	A1ay
89♦	3EZ68D3	3.0	68	3.0	11m	70		150J	A1ay
90	3EZ68D4	4.0	68	3.0	11m	70		150J	A1ay
91	1N5090	5	68	3.0	10m	85		175A	A146u
92	3EZ68D5	5	68	3.0	11m	70		200J	A1ay
93	3VR68,A,B	5†	68	3.0	11m	75			A3al
94	BZV16C68	5	68	3.0	7.0m	150	9.0	175	DO3
95	MZ768	5	68	3.0	10m	85	9.5	175A	A146j
96	ZCC68	5†	68	3.0 §	10m	85		150A	A1ey
97	ZCC68B	5	68	3.0	10m	85			A1ey
98	3EZ68D10	10	68	3.0	11m	70		200J	A1ay
99	MZ868	10	68	3.0	10m	85	9.5	175A	A146j
100	ZCC68A	10	68	3.0	10m	85			A1ey
101	3EZ68D	20	68	3.0	11m	70		200J	A1ay
102	MZ968	20	68	3.0	10m	85	9.5	175A	A146j
103▼	BZT03/D68	10	68	3.2	10m	80	13	175J	A94g
104	3T68,A,B	5†	68	3.5	5.0m	125			DO4
105▼	SZ3-68-5-1	5.0	68	5.0	1.0m			175	u5c
106▼	SZ3-68-5-25								
		5.0	68	5.0	25m			175	u5c
107▼	SZ3-68-10-1								
		10	68	5.0	1.0m			175	u5c
108▼	SZ3-68-10-25								
		10	68	5.0	25m			175	u5c
109▼	SZ3-68-20-1								
		20	68	5.0	1.0m			175	u5c
110▼	SZ3-68-20-25								
		20	68	5.0	25m			175	u5c
111	1N1969	10	68.5	400m	200u	900 †	11		A82e
112	1N1886B	1	69	1.0	3.0m	35 †	8.0	175A	DO13
113	DSZ3070	10	70		10m	90	9.5		A266
114	UZ8770	5	70	1.0	3.7m	150	9.5	175	A380
115	UZ8870	10	70	1.0	3.7m	150	9.5	175	A380
116	1N5091	5	70	3.0	10m	90		175A	A146u
117	MZ770	5	70	3.0	10m	90	9.5	175A	A146j
118	UZ770	5	70	3.0	10m	90	9.5	175A	A380
119	MZ870	10	70	3.0	10m	90	9.5	175A	A146j
120	UZ870	10	70	3.0	10m	90	9.5	175A	A380
121	MZ970	20	70	3.0	10m	90	9.5	175A	A146j
122	UZ970	20	70	3.0	10m	90	9.5	175A	A380
123	1N1324A	5	71	150m	200u		12	150A	C1
124	1N236	10†	71	.15	.20m			200A	C12a
125	1N1324	10	71	150m	200u			150A	C1
126	PS6324	15	71	500m		200m		200A	DO14
127	BZV49C68	5	72	1.0	2.0m			150J	M1008
128	3KZ82	10†	73.8	3.0 §	15m		.10		A3ak§
129	BZX84C75	5	74.5	200m	2.0m	255	10	150J	M500d

$V_Z \geq 75$ V

LINE No.	4 TYPE No.	3 TOL ± (%)	1 NOM. REF. VOLT. (V)	2 PD @ 25°C MAX (W)	TEST CUR. Izt (A)	DYN. IMP. MAX (Ω)	TEMP. COEFF Tc MAX	TEMP MAX (°C)	DWG. NO.
133	TZPY75		75		10m	160	11		DO41
134	1C3041	3	75		3.3	175			u36a
135	CD4761A	5.0	75		3.3m	175		200	u52
136	DSZ3075	10	75		10m	100	9.5		A266
137	1N735A	5	75	250m	2.0m	240	9.6	175A	DO7
138	1N4131	5	75	.25	.25m	700		200J	DO7
139	1/4M75Z10	10†	75	250m	830u	450		175J	E204h
140	1N735	10	75	250m	2.0m	240	9.6	175A	DO7
141	1N735B	20	75	.25	2.0m	240			DO7
142	1N5757D	1	75	400m§	2.0m	255	8.0	200A	DO35
143	1N5757C	2	75	400m§	2.0m	255	8.0	200A	DO35
144	BZX79B75	2	75	400m§	2.0m	255	80mV	200J	DO35
145	1N982B	5	75	400m	1.7m	270		175S	A398a
146	1N5757B	5	75	400m§	2.0m	255	8.0	200A	DO35
147	BZX79C75	5	75	400m§	2.0m	255	80mV	200J	DO35
148	CD982B	5	75	400m	1.7m	270	9.8	200J	u39a
149	CD4131	5	75	400m	250u	700	9.5	200J	u39a
150	CD5267B	5	75	400m	1.7m	270	9.8	200J	u39a
151	CH982	5	75	400m	1.7m	270	9.8	200J	u10
152	CH4131	5	75	400m	250u	700	10	200J	u10
153	CH5267	5	75	400m	1.7m	270	9.8	200J	u10
154	1N982A	10	75	400m	1.7m	270		175S	A398a
155	1N982	20	75	400m	1.7m	270		175S	A398a
156	1N5267B	5	75	500m	1.7m	270	9.8	200A	A398a
157	1N6021B	5	75	500m	2.0m	265		200J	DO35
158	BZX46C75	5	75	500m	1.7m	250	9.0	175J	DO35
159	BZX83C75	5	75	500m	250m	250	9.0	175J	DO35
160	MLL5267B	5.0	75	500m§	1.7m	270	9.8	200J	F140
161	RD75EB	5	75	500m	2.0m	300		175J	DO35
162▼	SZP5-75-5-1								
		5.0	75	500m	1.0m			175	u5a
163▼	SZ.5-75-5-25								
		5.0	75	500m	25m			175	u5a
164	BZX55C75	7	75	500m	2.5m	220		200J	A277c
165	BZV55C75	7.1	75	500m	2.0m	255	80	200J	F139
166	BZV60C75	7.1	75	500m	2.0m	255	80	200J	DO34
167	1N5267A	10	75	500m	1.7m	270	9.8	200A	A398a
168	1N5883A	10	75	500m	1.7m	600		150C	M859
169	1N6021A	10	75	500m	2.0m	300		200J	DO35
170	MLL5267A	10	75	500m§	1.7m	270	9.8	200J	F140
171▼	SZP5-75-10-1								
		10	75	500m	1.0m			175	u5a
172▼	SZ.5-75-10-25								
		10	75	500m	25m			175	u5a
173	1N5267	20†	75	.50	1.7m			200A	A398a
174	1N6021	20	75	500m	2.0m	300		200J	DO35
175	MLL5267	20	75	500m§	1.7m	270		200J	F140
176▼	SZP5-75-20-1								
		20	75	500m	1.0m			175	u5a
177▼	SZ.5-75-20-25								
		20	75	500m	25m			175	u5a
178	1N3700B	5	75	750m§	1.7m	270		175S	A1az
179	ZS75	5†	75	750m	5.0m	200	500m	150A	C3j
180	1N3700A	10	75	750m§	1.7m	270		175S	A1az
181	1N3700	20	75	750m§	1.7m	270		175S	A1az
182	BZX78C75		75	1.0	5.0m	125	78mV		
183	Z4A75	1†	75	1.0	5.0m	130	11	200J	DO29
184	1N1792A	5	75	1.0	5.0m	150		175A	DO13⊘
185	1N3041B	5	75	1.0	3.3m	175		175A	A31a
186	1N4183B	5	75	1.0 §	3.3m	175		200S	DO29
187	1N4348B	5	75	1.0	3.3m	175	9.0	300S	DO7
188	1N4425B	5	75	1.0	3.3m	60	9.0	175A	A1cm
189	1N4761A	5	75	1.0	3.3m	175		200A	DO41
190	1N5584B	5	75	1.0 §	3.3m	175		200A	A60ac
191	BZV85C75	5	75	1.0	4.0m	225	77mV	200J	DO41
192	CD4761	5	75	1.0	3.3m	175	9.8	200J	u39a
193	CH4761	5	75	1.0	3.3m	175	9.0	200J	u10
194	PL75Z	5	75	1.0	10m	100	9.0	150J	
195	RD75FB	5	75	1.0	10m	90		175J	A297c
196▼	SZ1-75-5-1	5.0	75	1.0	1.0m			175	u5b
197▼	SZ1-75-5-25								
		5.0	75	1.0	25m			175	u5b
198	TZB75B	5	75	1.0 §	1.0m		10	175A	A1ty
199	UZ8775	5	75	1.0	3.3m	175	9.5	175	A380
200	VR75,A,B	5†	75	1.0	3.3m	175		125A	A1b

SYMBOLS AND CODES EXPLAINED IN INTERPRETER

2. VOLTAGE REFERENCE DIODES - $V_Z \geq 75$ V (Cont'd)

IN ORDER OF: (1) REF. VOLTAGE (2) PD MAX (3) TOLERANCE & (4) TYPE NUMBER

LINE No.	4 TYPE No.	3 TOL ± (%)	1 NOM. REF. VOLT. (V)	2 PD @ 25°C MAX (W)	TEST CUR. Izt (A)	DYN. IMP. MAX (Ω)	TEMP. COEFF Tc MAX	TEMP MAX (°C)	DWG. NO.
1	Z4B75	5†	75	1.0	5.0m	130	11	200J	DO29
2	ZB75	5†	75	1.0 §	3.3m	175		150A	A1bc
3	ZB75B	5	75	1.0	3.3m	175		100C	A1bc
4	1N1792	10	75	1.0	5.0m	150		175A	DO13⊘
5	1N3041A	10	75	1.0	3.3m	175		175A	A31a
6	1N4183A	10	75	1.0 §	3.3m	175		200S	DO29
7	1N4348A	10	75	1.0	3.3m	175	9.0	300S	DO7
8	1N4425A	10	75	1.0	3.3m	60	9.0	175A	A1cm
9	1N4761	10	75	1.0	3.3m	175		200A	DO41
10	1N5584A	10	75	1.0 §	3.3m	175		200A	A60ac
11	1S252	10	75	1.0	4.0m	150	9.1	150J	A56a
12▼	SZ1-75-10-1								
		10	75	1.0	1.0m			175	u5b
13▼	SZ1-75-10-25								
		10	75	1.0	25m			175	u5b
14	TZB75A	10	75	1.0 §	1.0m		10	175A	A1ty
15	UZ8875	10	75	1.0	3.3m	175	9.5	175	A380
16	ZB75A	10	75	1.0	3.3m	175		100C	A1bc
17	1N3041	20	75	1.0	3.3m	175		175A	A31a
18	1N4183	20	75	1.0 §	3.3m	175		200S	DO29
19	1N4348	20	75	1.0	3.3m	175	9.0	300S	DO7
20	1N4425	20	75	1.0	3.3m	60		175S	A266a
21	1N5584	20	75	1.0 §	3.3			200A	A60ac
22▼	SZ1-75-20-1								
		20	75	1.0	1.0m			175	u5b
23▼	SZ1-75-20-25								
		20	75	1.0	25m			175	u5b
24	1N4853B	5	75	1.2	3.3m	175	9.8	175	DO29
25	1N4853A	10	75	1.2	3.3m	175	9.8	175	DO29
26	1N4853	20	75	1.2	3.3m	175	9.8	175	DO29
27	BZW22C75	5	75	1.3	10m	160		175S	DO41
28	BZX61C75	5	75	1.3	5.0m	135	8.0	175J	DO15
29	BZX85C75	5	75	1.3	3.3m	175	9.6	175J	DO41
30	BZX87C75	5	75	1.3	5.0m	125	9.8	200J	A60al
31	BZY97C75	5	75	1.3	10m	100	12		A1rx
32	ZD75	5	75	1.3	10	100	9.5	150J	DO13
33	ZMY75	5	75	1.3	10m	160	10	200J	F149
34	ZY75	5	75	1.3	10m	100	10	150J	A1bg
35	BZD10C75	7	75	1.3	10m	100	12		DO13
36	ZPY75	12	75	1.3	10m	160	13	200J	DO41
37	1N5946D	1	75	1.5	5.0m	140		200J	DO41
38	1N5946C	2	75	1.5	5.0m	140		200J	DO41
39	1N3810B	5	75	1.5	5.0m	110	9.8	175S	C14⊘
40	1N4486	5	75	1.5	3.3m	130		175A	A60y
41	1N5946B	5	75	1.5	5.0m	140		200J	DO41
42	1S4075,A	5†	75	1.5	5.0m	68	9.0	150A	DO1
43	BZY95C75	5	75	1.5	10m	70	9.3	175J	DO1
44	BZY97C75V	5†	75	1.5	10m	100	78mV	150J	A1bg
45▼	SZ1.5-75-5-1								
		5.0	75	1.5	1.0m			175	u5b
46	1N3810A	10	75	1.5	5.0m	110	9.8	175S	C14⊘
47	1N5946A	10	75	1.5	5.0m	140		200J	DO41
48▼	SZ1.5-75-10-1								
		10	75	1.5	1.0m			175	u5b
49	1N3810	20	75	1.5	5.0m	110	9.8	175S	C14⊘
50	1N5946	20	75	1.5	5.0m	140		200J	DO41
51▼	SZ1.5-75-20-1								
		20	75	1.5	1.0m			175	u5b
52	1N4073	5	75	2.0	5.0m	250	.50	100	A1nj
53	1N4073A	5	75	2.0	5.0m	250	.20	100	A1nj
54	2EZ75D5	5	75	2.0	6.7m	90		200J	A1ay
55	2VR75,A,B	5†	75	2.0	6.7m	150			A3e
56	BZV47C75	5	75	2.0	10m	100	9.0	175J	A344r
57	LMZ75A	5	75	2.0	6.5m	87	9.8	150A	DO41
58	ZBC75	5†	75	2.0 §	6.6m	100		150A	A1bc
59	ZBC75B	5	75	2.0	6.6m	100			A1ty
60	2EZ75D10	10	75	2.0	6.7m	90		200J	A1ay
61	LMZ75	10	75	2.0	6.5m	87	9.8	150A	DO41
62	ZBC75A	10	75	2.0	6.6m	100			A1ty
63	2EZ75D	20	75	2.0	6.7m	90		200J	A1ay
64	BZV15C75	5	75	2.2	200m	11	9.5	150J	M754⊘
65	Z7A75	1†	75	2.5	200m	11	11	200J	S457⊘
66	1N5048A	5	75	2.5	8.3m	66	9.0	150	A1gn
67	BZX70C75	5	75	2.5	10m	100	70mV	150J	A171b
68	Z2B75	5†	75	2.5	10m	130	11	200J	DO1
69	1N5048	10	75	2.5	8.3m	66	9.0	150	A1gn
70	3EZ75D1	1.0	75	3.0	10m	85		150J	A1ay
71	3EZ75D2	2.0	75	3.0	10m	85		150J	A1ay
72	3EZ75D3	3.0	75	3.0	10m	85		150J	A1ay
73	3EZ75D4	4.0	75	3.0	10m	85		150J	A1ay
74	1N5092	5	75	3.0	10m	100		175A	A146u
75	3EZ75D5	5	75	3.0	10m	85		200J	A1ay
76	3VR75,A,B	5†	75	3.0	10m	90			A3al
77	BZV16C75	5	75	3.0	6.5m	175	9.0	175	DO3
78	MZ775	5	75	3.0	10m	100	9.5	175A	A146j
79	UZ775	5	75	3.0	10m	100	9.5	175A	A380
80	ZCC75	5†	75	3.0 §	10m	100		150A	A1ey
81	ZCC75B	5	75	3.0	10m	100			A1ey
82	3EZ75D10	10	75	3.0	10m	85		200J	A1ay
83	MZ875	10	75	3.0	10m	100	9.5	175A	A146j
84	UZ875	10	75	3.0	10m	100	9.5	175A	A380
85	ZCC75A	10	75	3.0	10m	100			A1ey
86	3EZ75D	20	75	3.0	10m	85		200J	A1ay
87	MZ975	20	75	3.0	10m	100	9.5	175A	A146j
88	UZ975	20	75	3.0	10m	100	9.5	175A	A380
89▼	BZT03/D75	10	75	3.2	10m	100	13	175J	A94g
90	3T75,A,B	5†	75	3.5	5.0m	150			DO4
91▼	SZ3-75-5-1	5.0	75	5.0	1.0m			175	u5c
92▼	SZ3-75-5-25								
		5.0	75	5.0	25m			175	u5c
93▼	SZ3-75-10-1								
		10	75	5.0	1.0m			175	u5c
94▼	SZ3-75-10-25								
		10	75	5.0	25m			175	u5c
95▼	SZ3-75-20-1								
		20	75	5.0	1.0m			175	u5c
96▼	SZ3-75-20-25								
		20	75	5.0	25m			175	u5c
97	PS1509	5	75.6	.25	10m	135	.20	150A	A1gc
98	PS1509A	5	75.6	.25	10m	135	.10	150A	A1gc
99	BZV49C75	5	79	1.0	2.0m			150J	M1008
100	DSZ3080	10	80		10m	115	9.5		A266
101	UZ8780	5	80	1.0	3.0m	200	9.5	175	A380
102	VR80,A,B	5†	80	1.0	2.0m	280	10	125C	A1ex
103	UZ8880	10	80	1.0	3.0m	200	9.5	175	A380
104	2VR80,A,B	5†	80	2.0	2.0m	280			A3e
105	1N5093	5	80	3.0	10m	115		175A	A146u
106	MZ780	5	80	3.0	10m	115	9.5	175A	A146j
107	UZ780	5	80	3.0	10m	115	9.5	175A	A380
108	MZ880	10	80	3.0	10m	115	9.5	175A	A146j
109	UZ880	10	80	3.0	10m	115	9.5	175A	A380
110	MZ980	20	80	3.0	10m	115	9.5	175A	A146j
111	UZ980	20	80	3.0	10m	115	9.5	175A	A380
112	3KZ91	10†	81.9	3.0 §	15m		.10		A3ak§
113	1C3003		82		30m	25			u36
114	TZPY82		82		10m	160	11		DO41
115	CD4762A	5.0	82		3.0m	200		200	u52
116	BZX61C82	6	82		5.0m	175	13		
117	1N1997B	1	82	150m	200u	1.2k	12	150	C1
118	1N1997A	5	82	150m	200u	1.2k	12	150	C1
119	1N1997	10	82	150m	200u	1.2k	12	150	C1
120	1N1943B	1	82	200m	200u	1.2k	12	150A	A82e
121	1N1943A	5	82	200m	200u	1.2k	12	150A	A82e
122	1N1943	10	82	200m	200u	1.2k	12	150A	A82e
123	1N736A	5	82	250m	2.0m	280	9.6	175A	DO7
124	1N4132	5	82	.25	.25m	800		200J	DO7
125	1/4M82Z10	10†	82	250m	760u	550		175J	E204h
126	1N736	10	82	250m	2.0m	280	9.6	175A	DO7
127	1N736B	20	82	.25	2.0m	280			DO7
128	PTC515	10	82	254m†	3.1m	200			A1bc
129	1N983B	5	82	400m	1.5m	330		175S	A398a
130	CD983B	5	82	400m	1.5m	330	9.8	200J	u39a
131	CD4132	5	82	400m	250u	800	9.5	200J	u39a
132	CD5268B	5	82	400m	1.5m	330	9.8	200J	u39a
133	CH983	5	82	400m	1.5m	330	9.8	200J	u10
134	CH4132	5	82	400m	250u	800	10	200J	u10
135	CH5268	5	82	400m	1.5m	330	9.8	200J	u10
136	1N983A	10	82	400m	1.5m	330		175S	A398a
137	1N983	20	82	400m	1.5m	330		175S	A398a
138	1N5268B	5	82	500m	1.5m	230	9.8	200A	A398a
139	1N6022B	5	82	500m	2.0m	280		200J	DO35
140	BZX46C82	5	82	500m	1.5m	330	9.0	175J	DO35
141	BZX55C82	5	82	500m	2.5m	200	9.6	175J	DO35
142	MLL5268B	5.0	82	500m§	1.5m	330	9.8	200J	F140
143	RD82EB	5	82	500m	2.0m	300		175J	DO35
144▼	SZP5-82-5-1								
		5.0	82	500m	1.0m			175	u5a
145▼	SZ.5-82-5-25								
		5.0	82	500m	25m			175	u5a
146	1N3427	10	82	.50	1.0m	960	7.8	200A	P5
147	1N5268A	10	82	500m	1.5m	230	9.8	200A	A398a
148	1N5884A	10	82	500m	1.5m	700		150C	M859
149	1N6022A	10	82	500m	2.0m	350		200J	DO35
150	MLL5268A	10	82	500m§	1.5m	330	9.8	200J	F140
151▼	SZP5-82-10-1								
		10	82	500m	1.0m			175	u5a
152▼	SZ.5-82-10-25								
		10	82	500m	25m			175	u5a
153	PS6325	15	82	.50		.20		200A	DO14
154	1N5268	20†	82	.50	1.5m			200A	A398a
155	1N6022	20	82	500m	2.0m	350		200J	DO35
156	MLL5268	20	82	500m§	1.5m	330		200J	F140
157▼	SZP5-82-20-1								
		20	82	500m	1.0m			175	u5a
158▼	SZ.5-82-20-25								
		20	82	500m	25m			175	u5a
159	1N3701B	5	82	750m§	1.5m	330		175S	A1az
160	1N3701A	10	82	750m§	1.5m	330		175S	A1az
161	1N3701	20	82	750m§	1.5m	330		175S	A1az
162	Z4A82	1†	82	1.0	5.0m	175	11	200J	DO29
163	1N1793A	5	82	1.0	5.0m	175		175A	DO13⊘
164	1N1887A	5	82	1.0	3.0m	325	8.6	200C	A41e
165	1N3042B	5	82	1.0	3.0m	200		175A	A31a
166	1N4184B	5	82	1.0 §	3.0m	200		200S	DO29
167	1N4349B	5	82	1.0	3.0m	200	9.0	300S	DO7
168	1N4426B	5	82	1.0	3.0m	85	9.0	175A	A1cm
169	1N4762A	5	82	1.0	3.0m	200		200A	DO41
170	1N5585B	5	82	1.0 §	3.0m	200		200A	A60ac
171	CD4762	5	82	1.0	3.0m	200	9.8	200J	u39a
172	CH4762	5	82	1.0	3.0m	200	9.0	200J	u10
173	PL82Z	5	82	1.0	10m	100	9.0	150J	
174	PR255-RT	5	82	1.0	300u	200 †			DO7
175	RD82FB	5	82	1.0	10m	90		175J	A297c
176▼	SZ1-82-5-1	5.0	82	1.0	1.0m			175	u5b
177▼	SZ1-82-5-25								
		5.0	82	1.0	25m			175	u5b
178	TZB82B	5	82	1.0 §	1.0m		10	175A	A1ty
179	VR82,A,B	5†	82	1.0	3.0m	200		125A	A1b
180	Z4B82	5†	82	1.0	5.0m	175	11	200J	DO29
181	ZB82	5†	82	1.0 §	3.1m	200		150A	A1bc
182	ZB82B	5	82	1.0	3.1m	200		100C	A1bc
183	1N1793	10	82	1.0	5.0m	175		175A	DO13⊘
184	1N1887	10	82	1.0	3.0m	325	8.6	200C	A41e
185	1N3042A	10	82	1.0	3.0m	200		175A	A31a
186	1N4184A	10	82	1.0 §	3.0m	200		200S	DO29
187	1N4349A	10	82	1.0	3.0m	200	9.0	300S	DO7
188	1N4426A	10	82	1.0	3.0m	85	9.0	175A	A1cm
189	1N4762	10	82	1.0	3.0m	200		200A	DO41
190	1N5585A	10	82	1.0 §	3.0m	200		200A	A60ac
191	1S253	10	82	1.0	3.0m	170	9.1	150J	A56a
192▼	SZ1-82-10-1								
		10	82	1.0	1.0m			175	u5b
193▼	SZ1-82-10-25								
		10	82	1.0	25m			175	u5b
194	TZB82A	10	82	1.0 §	1.0m		10	175A	A1ty
195	ZB82A	10	82	1.0	3.1m	200		100C	A1bc
196	1N3042	20	82	1.0	3.0m	200		175A	A31a
197	1N4184	20	82	1.0 §	3.0m	200		200S	DO29
198	1N4349	20	82	1.0	3.0m	200	9.0	300S	DO7
199	1N4426	20	82	1.0	3.0m	85		175S	A266a

SYMBOLS AND CODES EXPLAINED IN INTERPRETER

2. VOLTAGE REFERENCE DIODES - $V_Z \geq 75$ V (Cont'd)

IN ORDER OF: (1) REF. VOLTAGE (2) PD MAX (3) TOLERANCE & (4) TYPE NUMBER

LINE No.	4 TYPE No.	3 TOL ± (%)	1 NOM. REF. VOLT. (V)	2 PD @ 25°C MAX (W)	TEST CUR. Izt (A)	DYN. IMP. MAX (Ω)	TEMP. COEFF Tc MAX	TEMP MAX (°C)	DWG. NO.
1	1N5585	20	82	1.0 §	3.0			200A	A60ac
2▼	SZ1-82-20-1	20	82	1.0	1.0m			175	u5b
3▼	SZ1-82-20-25	20	82	1.0	25m			175	u5b
4	1N4854B	5	82	1.2	3.0m	200	9.8	175	DO29
5	1N4854A	10	82	1.2	3.0m	200	9.8	175	DO29
6	1N4854	20	82	1.2	3.0m	200	9.8	175	DO29
7	BZW22C82	5	82	1.3	5.0m	160		175S	DO41
8	BZX85C82	5	82	1.3	3.0m	200	9.6	175J	DO41
9	BZY97C82	5	82	1.3	10m	100	12		A1rx
10	ZD82	5	82	1.3	10	100	9.5	150J	DO13
11	ZY82	5	82	1.3	10m	100	10	150J	A1bg
12	BZD10C82	6	82	1.3	10m	100	12		DO13
13	ZPY82	13	82	1.3	10m	160	13	200J	DO41
14	1N5947D	1	82	1.5	4.6m	160		200J	DO41
15	1N5947C	2	82	1.5	4.6m	160		200J	DO41
16	1N3811B	5	82	1.5	4.5m	130	9.8	175S	C14⊠
17	1N4487	5	82	1.5	3.0m	160		175A	A60y
18	1N5947B	5	82	1.5	4.6m	160		200J	DO41
19	1S4082,A	5†	82	1.5	5.0m	78	9.0	150A	DO1
20	BZY97C82V	5†	82	1.5	10m	100	86mV	150J	A1bg
21▼	SZ1.5-82-5-1	5.0	82	1.5	1.0m			175	u5b
22	1N3811A	10	82	1.5	4.5m	130	9.8	175S	C14⊠
23	1N5947A	10	82	1.5	4.6m	160		200J	DO41
24▼	SZ1.5-82-10-1	10	82	1.5	1.0m			175	u5b
25	1N3811	20	82	1.5	4.5m	130	9.8	175S	C14⊠
26	1N5947	20	82	1.5	4.6m	160		200J	DO41
27▼	SZ1.5-82-20-1	20	82	1.5	1.0m			175	u5b
28	1N4074	5	82	2.0	5.0m	270	.50	100	A1nj
29	1N4074A	5	82	2.0	5.0m	270	.20	100	A1nj
30	2EZ82D5	5	82	2.0	6.1m	100		200J	A1ay
31	2VR82,A,B	5†	82	2.0	6.1m	175			A3e
32	BZV47C82	5	82	2.0	10m	100	9.0	175J	A344r
33	LMZ82A	5	82	2.0	6.0m	100	9.8	150A	DO41
34	ZBC82	5†	82	2.0 §	6.2m	120		150A	A1bc
35	ZBC82B	5	82	2.0	6.2m	120			A1ty
36	2EZ82D10	10	82	2.0	6.1m	100		200J	A1ay
37	LMZ82	10	82	2.0	6.0m	100	9.8	150A	DO41
38	ZBC82A	10	82	2.0	6.2m	120			A1ty
39	2EZ82D	20	82	2.0	6.1m	100		200J	A1ay
40	Z7A82	1†	82	2.5	100m	15	11	200J	S457⊠
41	1N5049A	5	82	2.5	7.6m	78	9.0	150	A1gn
42	Z2B82	5†	82	2.5	10m	175	11	200J	DO1
43	1N5049	10	82	2.5	7.6m	78	9.0	150	A1gn
44	3EZ82D1	1.0	82	3.0	9.1m	95		150J	A1ay
45	3EZ82D2	2.0	82	3.0	9.1m	95		150J	A1ay
46	3EZ82D3	3.0	82	3.0	9.1m	95		150J	A1ay
47	3EZ82D4	4.0	82	3.0	9.1m	95		150J	A1ay
48	1N5094	5	82	3.0	10m	120		175A	A146u
49	3EZ82D5	5	82	3.0	9.1m	95		200J	A1ay
50	3VR82,A,B	5†	82	3.0	9.0m	100			A3al
51	BZV16C82	5	82	3.0	6.0m	200	9.0	175	DO3
52	MZ782	5	82	3.0	10m	120	9.5	175A	A146j
53	ZCC82	5†	82	3.0 §	10m	120		150A	A1ey
54	ZCC82B	5	82	3.0	10m	120			A1ey
55	3EZ82D10	10	82	3.0	9.1m	95		200J	A1ay
56	MZ882	10	82	3.0	10m	120	9.5	175A	A146j
57	ZCC82A	10	82	3.0	10m	120			A1ey
58	3EZ82D	20	82	3.0	9.1m	95		200J	A1ay
59	MZ982	20	82	3.0	10m	120	9.5	175A	A146j
60▼	BZT03/D82	10	82	3.2	10m	100	13	175J	A94g
61	3T82,A,B	5†	82	3.5	5.0m	175			DO4
62▼	SZ3-82-5-1	5.0	82	5.0	1.0m			175	u5c
63▼	SZ3-82-5-25	5.0	82	5.0	25m			175	u5c
64▼	SZ3-82-10-1	10	82	5.0	1.0m			175	u5c
65▼	SZ3-82-10-25	10	82	5.0	25m			175	u5c
66▼	SZ3-82-20-1	20	82	5.0	1.0m			175	u5c
67▼	SZ3-82-20-25	20	82	5.0	25m			175	u5c
68	ZMY82	6	82.5	1.3	10m	160	10	200J	F149
69	1N1970	10	83	400m	200u	1.2k†	11		A82e
70	PS1510	5	84	.25	10m	150	.20	150A	A1gc
71	PS1510A	5	84	.25	10m	150	.10	150A	A1gc
72	1N1325A	5	87	150m	200u		12	150A	C1
73	1N4133	5	87	.25	.25m	1.0k		200J	DO7
74	CD4133	5	87	400m	250u	1.0k	9.5	200J	u39a
75	CD5269B	5	87	400m	1.4m	370	9.9	200J	u39a
76	CH4133	5	87	400m	250u	1.0k	10	200J	u10
77	CH5269	5	87	400m	1.4m	370	9.9	200J	u10
78	1N5269B	5	87	500m	1.4m	370	9.9	200A	A398a
79	MLL5269B	5.0	87	500m§	1.4m	370	9.9	200J	F140
80	1N5269A	10	87	500m	1.4m	370	9.9	200A	A398a
81	1N5885A	10	87	500m	1.4m	780		150C	M859
82	MLL5269A	10	87	500m§	1.4m	370	9.9	200J	F140
83	1N5269	20†	87	.50	1.4m			200A	A398a
84	MLL5269	20	87	500m§	1.4m	370		200J	F140
85	1N4075	5	87	2.0	5.0m	290	.50	100	A1nj
86	1N4075A	5	87	2.0	5.0m	290	.20	100	A1nj
87	1N1325	10	87.5	150m	200u			150A	C1
88	1N237	10†	88	.15	.20m			200A	C12a
89	1N1887B	1	88	1.0	3.0m	45 †	8.6	175A	DO13
90	DSZ3090	10	90		8.0m	150	9.5		A266
91	UZ8790	5	90	1.0	2.8m	250	9.5	175	A380
92	VR90,A,B	5†	90	1.0	1.0m	340	10	125C	A1ex
93	UZ8890	10	90	1.0	2.8m	250	9.5	175	A380
94	2VR90,A,B	5†	90	2.0	1.0m	340			A3e
95	1N4096	5	90	3.0	8.0m	150		200S	A146
96	3VR90,A,B	5†	90	3.0	30m	60			A3al
97	MZ790	5	90	3.0	8.0m	150	9.5	175A	A146j
98	UZ790	5	90	3.0	8.0m	150	9.5	175A	A380
99	3KZ100	10†	90	3.0 §	12m		.10		A3ak§
100	MZ890	10	90	3.0	8.0m	150	9.5	175A	A146j
101	UZ890	10	90	3.0	8.0m	150	9.5	175A	A380
102	MZ990	20	90	3.0	8.0m	150	9.5	175A	A146j
103	UZ990	20	90	3.0	8.0m	150	9.5	175A	A380
104	ZMY91	6	90.5	1.3	5.0m	250	11	200J	F149
105	1C3004		91		28m	35			u36
106	TZPY91		91		5.0m	250	12		DO41
107	CD4763A	5.0	91		2.8m	250		200	u52
108	CD5377B	5	91		15m	75	9.4	200J	u39b
109	BZX61C91	6	91		5.0m	200	13		
110	1N737A	5	91	250m	1.0m	340	9.6	175A	DO7
111	1N4134	5	91	.25	.25m	1.2k		200J	DO7
112	1/4M91Z10	10†	91	250m	690u	700		175J	E204h
113	1N737	10	91	250m	1.0m	340	9.6	175A	DO7
114	1N737B	20	91	.25	1.0m	340			DO7
115	1N984B	5	91	400m	1.4m	400		175S	A398a
116	CD984B	5	91	400m	1.4m	400	9.9	200J	u39a
117	CD4134	5	91	400m	250u	1.2k	9.5	200J	u39a
118	CD5270B	5	91	400m	1.4m	400	9.9	200J	u39a
119	CH984	5	91	400m	1.4m	400	9.9	200J	u10
120	CH4134	5	91	400m	250u	1.2k	10	200J	u10
121	CH5270	5	91	400m	1.4m	400	9.9	200J	u10
122	1N984A	10	91	400m	1.4m	400		175S	A398a
123	1N984	20	91	400m	1.4m	400		175S	A398a
124	1N5270B	5	91	500m	1.4m	400	9.9	200A	A398a
125	1N6023B	5	91	500m	2.0m	300		200J	DO35
126	BZX46C91	5	91	500m	1.4m	400	9.0	175J	DO35
127	BZX55C91	5	91	500m	1.0m	250	9.6	175J	DO35
128	MLL5270B	5.0	91	500m§	1.4m	400	9.9	200J	F140
129	RD91EB	5	91	500m	2.0m	400		175J	DO35
130▼	SZ.5-91-5-25	5.0	91	500m	25m			175	u5a
131	1N5270A	10	91	500m	1.4m	400	9.9	200A	A398a
132	1N5886A	10	91	500m	1.4m	840		150C	M859
133	1N6023A	10	91	500m	2.0m	400		200J	DO35
134	MLL5270A	10	91	500m§	1.4m	400	9.9	200J	F140
135▼	SZP5-91-10-1	10	91	500m	1.0m			175	u5a
136▼	SZ.5-91-10-25	10	91	500m	25m			175	u5a
137	1N5270	20†	91	.50	1.4m			200A	A398a
138	1N6023	20	91	500m	2.0m	400		200J	DO35
139	MLL5270	20	91	500m§	1.4m	400		200J	F140
140▼	SZP5-91-20-1	20	91	500m	1.0m			175	u5a
141▼	SZ.5-91-20-25	20	91	500m	25m			175	u5a
142	1N3702B	5	91	750m§	1.4m	400		175S	A1az
143	1N3702A	10	91	750m§	1.4m	400		175S	A1az
144	1N3702	20	91	750m§	1.4m	400		175S	A1az
145	Z4A91	1†	91	1.0	5.0m	200	11	200J	DO29
146	1N1794A	5	91	1.0	5.0m	220		175A	DO13⊠
147	1N3043B	5	91	1.0	2.8m	250		175A	A31a
148	1N4185B	5	91	1.0 §	2.8m	250		200S	DO29
149	1N4350B	5	91	1.0	2.8m	250	9.0	300S	DO7
150	1N4427B	5	91	1.0	2.8m	115			A1bc
151	1N4763A	5	91	1.0	2.8m	250		200A	DO41
152	1N5586B	5	91	1.0 §	2.8m	250		200A	A60ac
153	CD4763	5	91	1.0	2.8m	250	9.9	200J	u39a
154	CH4763	5	91	1.0	2.8m	250	9.0	200J	u10
155	PL91Z	5	91	1.0	5.0m	200	9.0	150J	
156▼	SZ1-91-5-1	5.0	91	1.0	1.0m			175	u5b
157▼	SZ1-91-5-25	5.0	91	1.0	25m			175	u5b
158	TZB91B	5	91	1.0 §	1.0m		10	175A	A1ty
159	VR91,A,B	5†	91	1.0	2.8m	250		125A	A1b
160	Z4B91	5†	91	1.0	5.0m	200	11	200J	DO29
161	ZB91	5†	91	1.0 §	2.8m	250		150A	A1bc
162	ZB91B	5	91	1.0	2.8m	250		100C	A1bc
163	1N1794	10	91	1.0	5.0m	220		175A	DO13⊠
164	1N3043A	10	91	1.0	2.8m	250		175A	A31a
165	1N4185A	10	91	1.0 §	2.8m	250		200S	DO29
166	1N4350A	10	91	1.0	2.8m	250	9.0	300S	DO7
167	1N4427A	10	91	1.0	2.8m	115			A1bc
168	1N4763	10	91	1.0	2.8m	250		200A	DO41
169	1N5586A	10	91	1.0 §	2.8m	250		200A	A60ac
170	1S254	10	91	1.0	3.0m	220	9.3	150J	A56a
171▼	SZ1-91-10-1	10	91	1.0	1.0m			175	u5b
172▼	SZ1-91-10-25	10	91	1.0	25m			175	u5b
173	TZB91A	10	91	1.0 §	1.0m		10	175A	A1ty
174	ZB91A	10	91	1.0	2.8m	250		100C	A1bc
175	1N3043	20	91	1.0	2.8m	250		175A	A31a
176	1N4185	20	91	1.0 §	2.8m	250		200S	DO29
177	1N4350	20	91	1.0	2.8m	250	9.0	300S	DO7
178	1N4427	20	91	1.0	2.8m	115		175S	A266a
179	1N5586	20	91	1.0 §	2.8			200A	A60ac
180▼	SZ1-91-20-1	20	91	1.0	1.0m			175	u5b
181▼	SZ1-91-20-25	20	91	1.0	25m			175	u5b
182	1N4855B	5	91	1.2	2.8m	250	9.9	175	DO29
183	1N4855A	10	91	1.2	2.8m	250	9.9	175	DO29
184	1N4855	20	91	1.2	2.8m	250	9.9	175	DO29
185	BZW22C91	5	91	1.3	5.0m	250		175S	DO41
186	BZX85C91	5	91	1.3	2.8m	280	9.6	175J	DO41
187	BZY97C91	5	91	1.3	5.0m	200	13		A1rx
188	ZD91	5	91	1.3	5.0	200	9.5	150J	DO13
189	ZY91	5	91	1.3	5.0m	200	10	150J	A1bg
190	BZD10C91	7	91	1.3	5.0m	200	13		DO13
191	ZPY91	12	91	1.3	5.0m	250	13	200J	DO41
192	1N5948D	1	91	1.5	4.1m	200		200J	DO41
193	1N5948C	2	91	1.5	4.1m	200		200J	DO41
194	1N3812B	5	91	1.5	4.1m	150	9.9	175S	C14⊠
195	1N4488	5	91	1.5	2.8m	200		175A	A60y
196	1N5948B	5	91	1.5	4.1m	200		200J	DO41
197	1S4091,A	5†	91	1.5	2.0m	86	10	150A	DO1
198	BZY97C91V	5†	91	1.5	5.0m	200	100mV	150J	A1bg
199▼	SZ1.5-91-5-1	5.0	91	1.5	1.0m			175	u5b

SYMBOLS AND CODES EXPLAINED IN INTERPRETER

2. VOLTAGE REFERENCE DIODES - $V_Z \geq 75$ V (Cont'd)

IN ORDER OF: (1) REF. VOLTAGE (2) PD MAX (3) TOLERANCE & (4) TYPE NUMBER

LINE No.	4 TYPE No.	3 TOL ± (%)	1 NOM. REF. VOLT. (V)	2 PD @ 25°C MAX (W)	TEST CUR. Izt (A)	DYN. IMP. MAX (Ω)	TEMP. COEFF Tc MAX	TEMP MAX (°C)	DWG. NO.
1	1N3812A	10	91	1.5	4.1m	150	9.9	175S	C14Ø
2	1N5948A	10	91	1.5	4.1m	200		200J	DO41
3▼	SZ1.5-91-10-1								
		10	91	1.5	1.0m			175	u5b
4	1N3812	20	91	1.5	4.1m	150	9.9	175S	C14Ø
5	1N5948	20	91	1.5	4.1m	200		200J	DO41
6▼	SZ1.5-91-20-1								
		20	91	1.5	1.0m			175	u5b
7	1N4076	5	91	2.0	5.0m	310	.50	100	A1nj
8	1N4076A	5	91	2.0	5.0m	310	.20	100	A1nj
9	2EZ91D5	5	91	2.0	5.5m	125		200J	A1ay
10	2VR91,A,B	5†	91	2.0	5.5m	200			A3e
11	BZV47C91	5	91	2.0	5.0m	200	9.0	175J	A344r
12	LMZ91A	5	91	2.0	5.0m	125	9.9	150A	DO41
13	ZBC91	5†	91	2.0 §	5.3m	155		150A	A1bc
14	ZBC91B	5	91	2.0	5.3m	155			A1ty
15	2EZ91D10	10	91	2.0	5.5m	125		200J	A1ay
16	LMZ91	10	91	2.0	5.0m	125	9.9	150A	DO41
17	ZBC91A	10	91	2.0	5.3m	155			A1ty
18	2EZ91D	20	91	2.0	5.5m	125		200J	A1ay
19	Z7A91	1†	91	2.5	100m	20	11	200J	S457Ø
20	1N5050A	5	91	2.5	6.9m	90	9.0	150	A1gn
21	Z2B91	5†	91	2.5	5.0m	200	11	200J	DO1
22	1N5050	10	91	2.5	6.9m	90	9.0	150	A1gn
23	3EZ91D1	1.0	91	3.0	8.2m	115		150J	A1ay
24	3EZ91D2	2.0	91	3.0	8.2m	115		150J	A1ay
25	3EZ91D3	3.0	91	3.0	8.2m	115		150J	A1ay
26	3EZ91D4	4.0	91	3.0	8.2m	115		150J	A1ay
27	1N5095	5	91	3.0	8.0m	155		175A	A146u
28	3EZ91D5	5	91	3.0	8.2m	115		200J	A1ay
29	3VR91,A,B	5†	91	3.0	8.4m	125			A3al
30	BZV16C91	5	91	3.0	5.5m	250	9.0	175	DO3
31	MZ791	5	91	3.0	8.0m	155	9.5	175A	A146j
32	ZCC91	5†	91	3.0 §	8.0m	155		150A	A1ey
33	ZCC91B	5	91	3.0	8.0	155			A1ey
34	3EZ91D10	10	91	3.0	8.2m	115		200J	A1ay
35	MZ891	10	91	3.0	8.0m	155	9.5	175A	A146j
36	ZCC91A	10	91	3.0	8.0	155			A1ey
37	3EZ91D	20	91	3.0	8.2m	115		200J	A1ay
38	MZ991	20	91	3.0	8.0m	155	9.5	175A	A146j
39▼	BZT03/D91	10	91	3.2	5.0m	200	13	175J	A94g
40	3T91,A,B	5†	91	3.5	5.0m	220			DO4
41▼	SZ3-91-5-1	5.0	91	5.0	1.0m			175	u5c
42▼	SZ3-91-5-25								
		5.0	91	5.0	25m			175	u5c
43▼	SZ3-91-10-1								
		10	91	5.0	1.0m			175	u5c
44▼	SZ3-91-10-25								
		10	91	5.0	25m			175	u5c
45▼	SZ3-91-20-1								
		20	91	5.0	1.0m			175	u5c
46▼	SZ3-91-20-25								
		20	91	5.0	25m			175	u5c
47	1N1888B	1	96	1.0	3.0m	60 †	9.3	175A	DO13
48	ZMU100	10	99	1.3	5.0m	300	13	200J	F149
49	3KZ110	10†	99	3.0 §	12m		.10		A3ak§

$V_Z \geq 100$ V

LINE No.	4 TYPE No.	3 TOL ± (%)	1 NOM. REF. VOLT. (V)	2 PD @ 25°C MAX (W)	TEST CUR. Izt (A)	DYN. IMP. MAX (Ω)	TEMP. COEFF Tc MAX	TEMP MAX (°C)	DWG. NO.
53	1C3005		100		25m	40			u36
54	TZPY100		100		5.0m	250	12		DO41
55	Z100		100		5.0m	600		175A	DO41
56	CD4764A	5.0	100		2.5m	350		200	u52
57	CD5378B	5	100		12m	90	10	200J	u39b
58	BZX61C100	6	100		5.0m	220	13		
59	DSZ3100	10	100		5.0m	175	10		A266
60	1N1998B	1	100	150m	200u	1.7k	12	150	C1
61	1N1998A	5	100	150m	200u	1.7k	12	150	C1
62	1N1998	10	100	150m	200u	1.7k	12	150	C1
63	1N1944B	1	100	200m	200u	1.7k	12	150A	A82e
64	1N1944A	5	100	200m	200u	1.7k	12	150A	A82e
65	1N1944	10	100	200m	200u	1.7k	12	150A	A82e
66	1N738A	5	100	250m	1.0m	400	9.6	175A	DO7
67	1N4135	5	100	.25	.25m	1.5k		200J	DO7
68	1/4M100Z10	10†	100	250m	630u	900		175J	E204h
69	1N738	10	100	250m	1.0m	400	9.6	175A	DO7
70	1N738B	20	100	.25	1.0m	400			DO7
71	1N671	5	100	400m	500u	650	9.0	150A	A87
72	1N985B	5	100	400m	1.3m	500		175S	A398a
73	CD985B	5	100	400m	1.3m	500	11	200J	u39a
74	CD4135	5	100	400m	250u	1.5k	9.5	200J	u39a
75	CD5271B	5	100	400m	1.3m	500	11	200J	u39a
76	CH985	5	100	400m	1.3m	500	11	200J	u10
77	CH4135	5	100	400m	250u	1.5k	10	200J	u10
78	CH5271	5	100	400m	1.3m	500	11	200J	u10
79	1N985A	10	100	400m	1.3m	500		175S	A398a
80	1N985	20	100	400m	1.3m	500		175S	A398a
81	1N5271B	5	100	500m	1.3m	500	11	200A	A398a
82	1N6024B	5	100	500m	1.0m	500		200J	DO35
83	BZX46C100	5	100	500m	1.3m	500	9.0	175J	DO35
84	BZX55C100	5	100	500m	1.0m	300	9.6	175J	DO35
85	RD100EB	5	100	500m	2.0m	400		175J	DO35
86▼	SZP5-100-5-1								
		5.0	100	500m	1.0m			175	u5a
87▼	SZ.5-100-5-25								
		5.0	100	500m	25m			175	u5a
88	1N3428	10	100	.50	1.0m	1.2k	8.1	200A	P5
89	1N5271A	10	100	500m	1.3m	500	11	200A	A398a
90	1N5887A	10	100	500m	1.3m	1.0k		150C	M859
91	1N6024A	10	100	500m	1.0m	800		200J	DO35
92▼	SZP5-100-10-1								
		10	100	500m	1.0m			175	u5a
93▼	SZ.5-100-10-25								
		10	100	500m	25m			175	u5a
94	1N5271	20†	100	.50	1.3m			200A	A398a
95	1N6024	20	100	500m	1.0m	800		200J	DO35
96▼	SZP5-100-20-1								
		20	100	500m	1.0m			175	u5a
97▼	SZ.5-100-20-25								
		20	100	500m	25m			175	u5a
98	1N3703B	5	100	750m§	1.3m	500		175S	A1az
99	1N3703A	10	100	750m§	1.3m	500		175S	A1az
100	1N3703	20	100	750m§	1.3m	500		175S	A1az
101	LVA10100C	1	100	1.0	1.0m	100		175	A266c
102	Z4A100	1†	100	1.0	2.5m	350	11	200J	DO29
103	1N1432	5	100	1.0	2.0m	350 †	9.0	200A	A154
104	1N1795A	5	100	1.0	5.0m	260		175A	DO13Ø
105	1N1888A	5	100	1.0	3.0m	400	9.3	200C	A41e
106	1N3044B	5	100	1.0	2.5m	350		175A	A31a
107	1N4186B	5	100	1.0 §	2.5m	350		200S	DO29
108	1N4351B	5	100	1.0	2.5m	350	9.0	300S	DO7
109	1N4428B	5	100	1.0	2.5m	165	9.0	175A	A1cm
110	1N4764A	5	100	1.0	2.5m	350		200A	DO41
111	1N5587B	5	100	1.0 §	2.5m	350		200A	A60ac
112	CD4764	5	100	1.0	2.5m	350	11	200J	u39a
113	CH4764	5	100	1.0	2.5m	350	9.0	200J	u10
114	PL100Z	5	100	1.0	5.0m	200	9.0	150J	
115▼	SZ1-100-5-1								
		5.0	100	1.0	1.0m			175	u5b
116▼	SZ1-100-5-25								
		5.0	100	1.0	25m			175	u5b
117	TZB100B	5	100	1.0 §	1.0m		10	175A	A1ty
118	UZ8110	5	100	1.0	2.5m	350	10	175	A380
119	VR100,A,B	5†	100	1.0	2.5m	350		125A	A1b
120	Z4B100	5†	100	1.0	2.5m	350	11	200J	DO29
121	ZB100	5†	100	1.0 §	2.5m	350		150A	A1bc
122	ZB100B	5	100	1.0	2.5m	350		100C	A1bc
123	1N1795	10	100	1.0	5.0m	260		175A	DO13Ø
124	1N1888	10	100	1.0	3.0m	400	9.3	200C	A41e
125	1N3044A	10	100	1.0	2.5m	350		175A	A31a
126	1N4186A	10	100	1.0 §	2.5m	350		200S	DO29
127	1N4351A	10	100	1.0	2.5m	350	9.0	300S	DO7
128	1N4428A	10	100	1.0	2.5m	165	9.0	175A	A1cm
129	1N4764	10	100	1.0	2.5m	350		200A	DO41
130	1N5587A	10	100	1.0 §	2.5m	350		200A	A60ac
131	1S255	10	100	1.0	3.0m	260	9.0	150J	A56a
132▼	SZ1-100-10-1								
		10	100	1.0	1.0m			175	u5b
133▼	SZ1-100-10-25								
		10	100	1.0	25m			175	u5b
134	TZB100A	10	100	1.0 §	1.0m		10	175A	A1ty
135	UZ8210	10	100	1.0	2.5m	350	10	175	A380
136	ZB100A	10	100	1.0	2.5m	350		100C	A1bc
137	1N3044	20	100	1.0	2.5m	350		175A	A31a
138	1N4186	20	100	1.0 §	2.5m	350		200S	DO29
139	1N4351	20	100	1.0	2.5m	350	9.0	300S	DO7
140	1N4428	20	100	1.0	2.5m	165		175S	A266a
141	1N5587	20	100	1.0 §	2.5			200A	A60ac
142▼	SZ1-100-20-1								
		20	100	1.0	1.0m			175	u5b
143▼	SZ1-100-20-25								
		20	100	1.0	25m			175	u5b
144	1N4856B	5	100	1.2	2.5m	350	10	175	DO29
145	1N4856A	10	100	1.2	2.5m	350	10	175	DO29
146	1N4856	20	100	1.2	2.5m	350	10	175	DO29
147	BZW22C100	5	100	1.3	5.0m	250		175S	DO41
148	BZX85C100	5	100	1.3	2.5m	380	9.6	175J	DO41
149	BZY97C100	5	100	1.3	5.0m	200	13		A1rx
150	ZD100	5	100	1.3	5.0	200	9.5	150J	DO13
151	ZY100	5	100	1.3	5.0m	200	10	150J	A1bg
152	BZD10C100	6	100	1.3	5.0m	200	13		DO13
153	ZMY100	6	100	1.3	5.0m	250	11	200J	F149
154	ZPU100	11	100	1.3	5.0m	300	13	200J	DO41
155	ZPY100	12	100	1.3	5.0m	250	13	200J	DO41
156	1N5949D	1	100	1.5	3.7m	250		200J	DO41
157	1N5949C	2	100	1.5	3.7m	250		200J	DO41
158	1N3813B	5	100	1.5	3.7m	200	10	175S	C14Ø
159	1N4489	5	100	1.5	2.5m	250		175A	A60y
160	1N5949B	5	100	1.5	3.7m	250		200J	DO41
161	1S4100,A	5†	100	1.5	2.0m	96	10	150A	DO1
162▼	SZ1.5-100-5-1								
		5.0	100	1.5	1.0m			175	u5b
163	1N3813A	10	100	1.5	3.7m	200	10	175S	C14Ø
164	1N5949A	10	100	1.5	3.7m	250		200J	DO41
165▼	SZ1.5-100-10-1								
		10	100	1.5	1.0m			175	u5b
166	1N3813	20	100	1.5	3.7m	200	10	175S	C14Ø
167	1N5949	20	100	1.5	3.7m	250		200J	DO41
168▼	SZ1.5-100-20-1								
		20	100	1.5	1.0m			175	u5b
169	1N4077	5	100	2.0	5.0m	340	.50	100	A1nj
170	1N4077A	5	100	2.0	5.0m	340	.20	100	A1nj
171	2EZ100D5	5	100	2.0	5.0m	175		200J	A1ay
172	2VR100,A,B	5†	100	2.0	5.0m	300			A3e
173	BZV47C100	5	100	2.0	5.0m	200	9.0	175J	A344r
174	LMZ100A	5	100	2.0	5.0m	175	10	150A	DO41
175	ZBC100	5†	100	2.0 §	5.0m	175		150A	A1bc
176	ZBC100B	5	100	2.0	5.0m	175			A1ty
177	2EZ100D10	10	100	2.0	5.0m	175		200J	A1ay
178	LMZ100	10	100	2.0	5.0m	175	10	150A	DO41
179	ZBC100A	10	100	2.0	5.0m	175			A1ty
180	2EZ100D	20	100	2.0	5.0m	175		200J	A1ay
181	Z7A100	1†	100	2.5	100m	20	11	200J	S457Ø
182	1N5051A	5	100	2.5	6.2m	120	9.0	150	A1gn
183	Z2B100	5†	100	2.5	5.0m	250	11	200J	DO1
184	1N5051	10	100	2.5	6.2m	120	9.0	150	A1gn
185	3EZ100D1	1.0	100	3.0	7.5m	160		150J	A1ay
186	3EZ100D2	2.0	100	3.0	7.5m	160		150J	A1ay
187	3EZ100D3	3.0	100	3.0	7.5m	160		150J	A1ay
188	3EZ100D4	4.0	100	3.0	7.5m	160		150J	A1ay
189	1N4097	5	100	3.0	5.0m	175		200S	A146
190	3EZ100D5	5	100	3.0	7.5m	160		200J	A1ay
191	3VR100,A,B	5†	100	3.0	7.5m	200			A3al
192	BZV16C100	5	100	3.0	5.0m	350	9.0	175	DO3
193	MZ110	5	100	3.0	5.0m	175	10	175A	A146j
194	UZ110	5	100	3.0	5.0m	175	10	175A	A380
195	ZCC100	5†	100	3.0 §	7.0m	175		150A	A1ey
196	ZCC100B	5	100	3.0	7.0	175			A1ey
197	3EZ100D10	10	100	3.0	7.5m	160		200J	A1ay
198	MZ210	10	100	3.0	5.0m	175	10	175A	A146j

SYMBOLS AND CODES EXPLAINED IN INTERPRETER

2. VOLTAGE REFERENCE DIODES - $V_Z \geq 100$ V (Cont'd)

IN ORDER OF: (1) REF. VOLTAGE (2) PD MAX (3) TOLERANCE & (4) TYPE NUMBER

LINE No.	4 TYPE No.	3 TOL ± (%)	1 NOM. REF. VOLT. (V)	2 PD @ 25°C MAX (W)	TEST CUR. Izt (A)	DYN. IMP. MAX (Ω)	TEMP. COEFF Tc MAX	TEMP MAX (°C)	DWG. NO.
1	UDZ210	10	100	3.0	5.0m	175		175A	A356a
2	UZ210	10	100	3.0	5.0m	175 †	10	175A	A380
3	ZCC100A	10	100	3.0	7.0	175			A1ey
4	3EZ100D	20	100	3.0	7.5m	160		200J	A1ay
5	MZ310	20	100	3.0	5.0m	175	10	175A	A146j
6	UZ310	20	100	3.0	5.0m	175 †	10	175A	A380
7▼	BZT03/D100	10	100	3.2	5.0m	200	13	175J	A94g
8	3T100,A,B	5†	100	3.5	5.0m	260			DO4
9▼	SZ3-100-5-1								
		5.0	100	5.0	1.0m			175	u5c
10▼	SZ3-100-5-25								
		5.0	100	5.0	25m			175	u5c
11▼	SZ3-100-10-1								
		10	100	5.0	1.0m			175	u5c
12▼	SZ3-100-10-25								
		10	100	5.0	25m			175	u5c
13▼	SZ3-100-20-1								
		20	100	5.0	1.0m			175	u5c
14▼	SZ3-100-20-25								
		20	100	5.0	25m			175	u5c
15	1C3006		105		25m	45			u36
16	1N1326A	5	105	150m	200u		12	150A	C1
17	1N238	10†	105	.15	.20m			200A	C12a
18	1N1326	10	105	150m	200u			150A	C1
19	1/4M105Z10	10†	105	250m	600u	1.0k		175J	E204h
20	PS6326	15	105	.50		.20		200A	DO14
21	VR105,A,B	5†	105	1.0	1.0m	400	10	125C	A1ex
22	1S256	10	105	1.0	3.0m	290	9.0	150J	A56a
23	1N4078	5	105	2.0	2.5m	700	.50	100	A1nj
24	1N4078A	5	105	2.0	2.5m	700	.20	100	A1nj
25	2VR105,A,B	5†	105	2.0	1.0m	400			A3e
26	ZBC105	5†	105	2.0 §	4.8m	200		150A	A1bc
27	ZBC105B	5	105	2.0	4.8m	200			A1ty
28	ZBC105A	10	105	2.0	4.8m	200			A1ty
29	ZCC105	5†	105	3.0 §	6.0m	200		150A	A1ey
30	ZCC105B	5	105	3.0	6.0	200			A1ey
31	ZCC105A	10	105	3.0	6.0	200			A1ey
32	3KZ120	10†	108	3.0 §	10m		.10		A3ak§
33	1C3007		110		23m	55			u36
34	Z110		110		5.0m	750		175	DO41
35	1C5379	3	110		12m	125			u36a
36	CD5379B	5	110		12m	125	10	200J	u39b
37	BZX61C110	6	110		5.0m	250	13		
38	1N739A	5	110	250m	1.0m	490	9.6	175A	DO7
39	1N739	10	110	250m	1.0m	490	9.6	175A	DO7
40	1N739B	20	110	.25	1.0m	490			DO7
41	PTC516	10	110	253m†	2.3m	450			A1bc
42	1N986B	5	110	400m	1.1m	750		175S	A398a
43	CD986B	5	110	400m	1.1m	750	11	200J	u39a
44	CD5272B	5	110	400m	1.1m	750	11	200J	u39a
45	CH986	5	110	400m	1.1m	750	11	200J	u10
46	CH5272	5	110	400m	1.1m	750	11	200J	u10
47	1N986A	10	110	400m	1.1m	750		175S	A398a
48	1N986	20	110	400m	1.1m	750		175S	A398a
49	RD110EB		110	500m	5.0m	750		175J	A277b
50	1N5272B	5	110	500m	1.1m	750	11	200A	A398a
51	1N6025B	5	110	500m	1.0m	650		200J	DO35
52	BZX46C110	5	110	500m	1.1m	750	10	175J	DO35
53	BZX55C110	5	110	500m	1.0m	350	9.6	175J	DO35
54▼	SZP5-110-5-1								
		5.0	110	500m	1.0m			175	u5a
55▼	SZ.5-110-5-25								
		5.0	110	500m	25m			175	u5a
56	1N5272A	10	110	500m	1.1m	750	11	200A	A398a
57	1N5888A	10	110	500m	1.1m	1.2k		150C	M764
58	1N6025A	10	110	500m	1.0m	950		200J	DO35
59▼	SZP5-110-10-1								
		10	110	500m	1.0m			175	u5a
60	1N5272	20†	110	.50	1.1m			200A	A398a
61	1N6025	20	110	500m	1.0m	950		200J	DO35
62▼	SZP5-110-20-1								
		20	110	500m	1.0m			175	u5a
63▼	SZ.5-110-20-25								
		20	110	500m	25m			175	u5a
64	1N3704B	5	110	750m§	1.1m	750		175S	A1az
65	1N3704A	10	110	750m§	1.1m	750		175S	A1az
66	1N3704	20	110	750m§	1.1m	750		175S	A1az
67	Z4A110	1†	110	1.0	2.5m	450	11	200J	DO29
68	1EZ110D5	5	110	1.0	2.3m	570	9.5	175J	A1ay
69	1M110ZS10,5								
		5†	110	1.0	2.3m	450		200J	DO41Ø
70	1N1796A	5	110	1.0	5.0m	320		175A	DO13Ø
71	1N3045B	5	110	1.0	2.3m	450		175A	A31a
72	1N4187B	5	110	1.0 §	2.3m	450		200S	DO29
73	1N4352B	5	110	1.0	2.3m	450	9.5	300S	DO7
74	1N4429B	5	110	1.0	2.3m	250	9.5	175A	A1cm
75	1N5588B	5	110	1.0 §	2.3m	450		200A	A60ac
76	PL110Z	5	110	1.0	5.0m	250	9.5	150J	
77	PR256-RT	5	110	1.0	230u	450 †			DO7
78▼	SZ1-110-5-1								
		5.0	110	1.0	1.0m			175	u5b
79▼	SZ1-110-5-25								
		5.0	110	1.0	25m			175	u5b
80	TZB110B	5	110	1.0 §	1.0m		10	175A	A1ty
81	UZ8111	5	110	1.0	2.3m	450	10	175	A380
82	VR110,A,B	5†	110	1.0	2.3m	450		125A	A1b
83	Z4B110	5†	110	1.0	2.5m	450	11	200J	DO29
84	ZB110	5†	110	1.0 §	2.3m	450		150A	A1bc
85	ZB110B	5	110	1.0	2.3m	450		100C	A1bc
86	1EZ110D10	10	110	1.0	2.3m	570	9.5	175J	A1ay
87	1N1796	10	110	1.0	5.0m	320		175A	DO13Ø
88	1N3045A	10	110	1.0	2.3m	450		175A	A31a
89	1N4187A	10	110	1.0 §	2.3m	450		200S	DO29
90	1N4352A	10	110	1.0	2.3m	450	9.5	300S	DO7
91	1N4429A	10	110	1.0	2.3m	250	9.5	175A	A1cm
92	1N5588A	10	110	1.0 §	2.3m	450		200A	A60ac
93	1S257	10	110	1.0	3.0m	320	9.1	150J	A56a
94▼	SZ1-110-10-1								
		10	110	1.0	1.0m			175	u5b
95▼	SZ1-110-10-25								
		10	110	1.0	25m			175	u5b
96	TZB110A	10	110	1.0 §	1.0m		10	175A	A1ty
97	UZ8211	10	110	1.0	2.3m	450	10	175	A380
98	ZB110A	10	110	1.0	2.3m	450		100C	A1bc
99	1EZ110D	20	110	1.0	2.3m	570	9.5	175J	A1ay
100	1N3045	20	110	1.0	2.3m	450		175A	A31a
101	1N4187	20	110	1.0 §	2.3m	450		200S	DO29
102	1N4352	20	110	1.0	2.3m	450	9.5	300S	DO7
103	1N4429	20	110	1.0	2.3m	250		175S	A266a
104	1N5588	20	110	1.0 §	2.3			200A	A60ac
105▼	SZ1-110-20-1								
		20	110	1.0	1.0m			175	u5b
106▼	SZ1-110-20-25								
		20	110	1.0	25m			175	u5b
107	1N4857B	5	110	1.2	2.3m	450	10	175	DO29
108	1N4857A	10	110	1.2	2.3m	450	10	175	DO29
109	1N4857	20	110	1.2	2.3m	450	10	175	DO29
110	BZD10C110	5	110	1.3	5.0m	250	13		DO13
111	BZW22C110	5	110	1.3	5.0m	300		175S	DO41
112	BZX85C110	5	110	1.3	2.3m	450	9.6	175J	DO41
113	BZY97C110	5	110	1.3	5.0m	250	13		A1rx
114	ZD110	5	110	1.3	5.0	250	10	150J	DO13
115	ZY110	5	110	1.3	5.0m	250	11	150J	A1bg
116	1N5950D	1	110	1.5	3.4m	300		200J	DO41
117	1N5950C	2	110	1.5	3.4m	300		200J	DO41
118	1N3814B	5	110	1.5	3.4m	300	10	175S	C14Ø
119	1N4490	5	110	1.5	2.3m	300		175A	A60y
120	1N5950B	5	110	1.5	3.4m	300		200J	DO41
121	1S4110,A	5†	110	1.5	2.0m	107	10	150A	DO1
122▼	SZ1.5-110-5-1								
		5.0	110	1.5	1.0m			175	u5b
123	1N3814A	10	110	1.5	3.4m	300	10	175S	C14Ø
124	1N5950A	10	110	1.5	3.4m	300		200J	DO41
125▼	SZ1.5-110-10-1								
		10	110	1.5	1.0m			175	u5b
126	1N3814	20	110	1.5	3.4m	300	10	175S	C14Ø
127	1N5950	20	110	1.5	3.4m	300		200J	DO41
128▼	SZ1.5-110-20-1								
		20	110	1.5	1.0m			175	u5b
129	1N4079	5	110	2.0	2.5m	740	.50	100	A1nj
130	1N4079A	5	110	2.0	2.5m	740	.20	100	A1nj
131	2EZ110D5	5	110	2.0	4.5m	250		200J	A1ay
132	2VR110,A,B	5†	110	2.0	4.5m	400			A3e
133	BZV47C110	5	110	2.0	5.0m	250	9.5	175J	A344r
134	LMZ110A	5	110	2.0	4.5m	250	10	150A	DO41
135	ZBC110	5†	110	2.0 §	4.6m	250		150A	A1bc
136	ZBC110B	5	110	2.0	4.6m	250			A1ty
137	2EZ110D10	10	110	2.0	4.5m	250		200J	A1ay
138	LMZ110	10	110	2.0	4.5m	250	10	150A	DO41
139	ZBC110A	10	110	2.0	4.6m	250			A1ty
140	2EZ110D	20	110	2.0	4.5m	250		200J	A1ay
141	Z7A110	1†	110	2.5	100m	25	11	200J	S457Ø
142	Z2B110	5†	110	2.5	5.0m	350	11	200J	DO1
143	3EZ110D1	1.0	110	3.0	6.8m	225		150J	A1ay
144	3EZ110D2	2.0	110	3.0	6.8m	225		150J	A1ay
145	3EZ110D3	3.0	110	3.0	6.8m	225		150J	A1ay
146	3EZ110D4	4.0	110	3.0	6.8m	225		150J	A1ay
147	1N5096	5	110	3.0	5.0m	250		175A	A146u
148	3EZ110D5	5	110	3.0	6.8m	225		200J	A1ay
149	3VR110,A,B	5†	110	3.0	6.9m	225			A3al
150	MZ111	5	110	3.0	5.0m	250	10	175A	A146j
151	UZ111	5	110	3.0	5.0m	250	10	175A	A380
152	ZCC110	5†	110	3.0 §	5.0m	250		150A	A1ey
153	ZCC110B	5	110	3.0	5.0	250			A1ey
154	3EZ110D10	10	110	3.0	6.8m	225		200J	A1ay
155	MZ211	10	110	3.0	5.0m	250	10	175A	A146j
156	UZ211	10	110	3.0	5.0m	250	10	175A	A380
157	ZCC110A	10	110	3.0	5.0	250			A1ey
158	3EZ110D	20	110	3.0	6.8m	225		200J	A1ay
159	MZ311	20	110	3.0	5.0m	250	10	175A	A146j
160♦	UZ311	20	110	3.0	5.0m	250	10	175A	A380
161▼	BZT03/D110	10	110	3.2	5.0m	250	13	175J	A94g
162	3T110,A,B	5†	110	3.5	5.0m	320			S11
163▼	SZ3-110-5-1								
		5.0	110	5.0	1.0m			175	u5c
164▼	SZ3-110-5-25								
		5.0	110	5.0	25m			175	u5c
165▼	SZ3-110-10-1								
		10	110	5.0	1.0m			175	u5c
166▼	SZ3-110-10-25								
		10	110	5.0	25m			175	u5c
167▼	SZ3-110-20-1								
		20	110	5.0	1.0m			175	u5c
168▼	SZ3-110-20-25								
		20	110	5.0	25m			175	u5c
169	Z115	20	115	500m	5.0m	750		175A	DO41
170	3KZ130	10†	117	3.0 §	10m		.10		A3ak§
171	1C3008		120		20m	75			u36
172	BZX61C120	5	120		5.0m	270	14		
173	CD5273A	5.0	120		1.0m	900		200	u52
174	CD5380B	5	120		10m	170	10	200J	u39b
175	1N1999B	1	120	150m	200u	2.8k		150	C1
176	1N1999A	5	120	150m	200u	2.8k		150	C1
177	1N1999	10	120	150m	200u	2.8k		150	C1
178	1N1945B	1	120	200m	200u	2.8k		150	DO7
179	1N1945A	5	120	200m	200u	2.8k		150	DO7
180	1N1945	10	120	200m	200u	2.8k		150	DO7
181	1N740A	5	120	250m	1.0m	570	9.6	175A	DO7
182	1N740	10	120	250m	1.0m	570	9.6	175A	DO7
183	1N740B	20	120	.25	1.0m	570			DO7
184	1N987B	5	120	400m	1.0m	900		175S	A398a
185	CD987B	5	120	400m	1.0m	900	11	200J	u39a
186	CD5373B	5	120	400m	1.0m	44	11	200J	u39a
187	CH987	5	120	400m	1.0m	900	11	200J	u10
188	CH5273	5	120	400m	1.0m	900	11	200J	u10
189	1N987A	10	120	400m	1.0m	900		175S	A398a
190	1N987	20	120	400m	1.0m	900		175S	A398a
191	RD120EB		120	500m	5.0m	900		175J	A277b
192	1N5273B	5	120	500m	1.0m	900	11	200A	A398a

SYMBOLS AND CODES EXPLAINED IN INTERPRETER

2. VOLTAGE REFERENCE DIODES - $V_Z \geq 100$ V (Cont'd)

IN ORDER OF: (1) REF. VOLTAGE (2) PD MAX (3) TOLERANCE & (4) TYPE NUMBER

LINE No.	4 TYPE No.	3 TOL ± (%)	1 NOM. REF. VOLT. (V)	2 PD @ 25°C MAX (W)	TEST CUR. Izt (A)	DYN. IMP. MAX (Ω)	TEMP. COEFF Tc MAX	TEMP MAX (°C)	DWG. NO.
1	1N6026B	5	120	500m	1.0m	800		200J	DO35
2	BZX55C120	5	120	500m	1.0m	500	9.6	175J	DO35
3▼	SZP5-120-5-1								
		5.0	120	500m	1.0m			175	u5a
4▼	SZ.5-120-5-25								
		5.0	120	500m	25m			175	u5a
5	1N3429	10	120	.50	1.0m	1.4k	8.3	200A	P5
6	1N5273A	10	120	500m	1.0m	900	11	200A	A398a
7	1N5889A	10	120	500m	1.0m	1.4k		150C	M859
8	1N6026A	10	120	500m	1.0m	1.2k		200J	DO35
9▼	SZP5-120-10-1								
		10	120	500m	1.0m			175	u5a
10▼	SZ.5-120-10-25								
		10	120	500m	25m			175	u5a
11	1N5273	20†	120	.50	1.0m			200A	A398a
12	1N6026	20	120	500m	1.0m	1.2k		200J	DO35
13▼	SZP5-120-20-1								
		20	120	500m	1.0m			175	u5a
14▼	SZ.5-120-20-25								
		20	120	500m	25m			175	u5a
15	1N3705B	5	120	750m§	1.0m	900		175S	A1az
16	1N3705A	10	120	750m§	1.0m	900		175S	A1az
17	1N3705	20	120	750m§	1.0m	900		175S	A1az
18	Z4A120	1†	120	1.0	2.5m	550	11	200J	DO29
19	1EZ120D5	5	120	1.0	2.0m	710	9.5	175J	A1ay
20	1M120ZS10,5								
		5†	120	1.0	2.0m	550		200J	DO41Ø
21	1N1797A	5	120	1.0	5.0m	390		175A	DO13Ø
22	1N3046B	5	120	1.0	2.0m	550		175A	A31a
23	1N4188B	5	120	1.0 §	2.0m	550		200S	DO29
24	1N4353B	5	120	1.0	2.0m	550	9.5	300S	DO7
25	1N4430B	5	120	1.0	2.0m	350	9.5	175A	A1cm
26	1N5589B	5	120	1.0 §	2.0m	550		200A	A60ac
27	PL120Z	5	120	1.0	5.0m	250	9.5	150J	
28▼	SZ1-120-5-1								
		5.0	120	1.0	1.0m			175	u5b
29▼	SZ1-120-5-25								
		5.0	120	1.0	25m			175	u5b
30	TZB120B	5	120	1.0 §	1.0m		10	175A	A1ty
31	UZ8112	5	120	1.0	2.0m	550	10	175	A380
32	VR120,A,B	5†	120	1.0	2.0m	550		125A	A1b
33	Z4B120	5†	120	1.0	2.5m	550	11	200J	DO29
34	ZB120	5†	120	1.0 §	2.0m	550		150A	A1bc
35	ZB120B	5	120	1.0	2.0m	550		100C	A1bc
36	1EZ120D10	10	120	1.0	2.0m	710	9.5	175J	A1ay
37	1N1797	10	120	1.0	5.0m	390		175A	DO13Ø
38	1N3046A	10	120	1.0	2.0m	550		175A	A31a
39	1N3098A	10	120	1.0	3.0m	500		130C	A86c
40	1N4188A	10	120	1.0 §	2.0m	550		200S	DO29
41	1N4353A	10	120	1.0	2.0m	550	9.5	300S	DO7
42	1N4430A	10	120	1.0	2.0m	350	9.5	175A	A1cm
43	1N5589A	10	120	1.0 §	2.0m	550		200A	A60ac
44	1S258	10	120	1.0	3.0m	400	9.2	150J	A56a
45▼	SZ1-120-10-1								
		10	120	1.0	1.0m			175	u5b
46▼	SZ1-120-10-25								
		10	120	1.0	25m			175	u5b
47	TZB120A	10	120	1.0 §	1.0m		10	175A	A1ty
48	UZ8212	10	120	1.0	2.0m	550	10	175	A380
49	Z120	10	120	1.0	2.0m	550		200	DO41
50	ZB120A	10	120	1.0	2.0m	550		100C	A1bc
51	1EZ120D	20	120	1.0	2.0m	710	9.5	175J	A1ay
52	1N3046	20	120	1.0	2.0m	550		175A	A31a
53	1N3098	20	120	1.0	3.0m	500		130C	A86c
54	1N4188	20	120	1.0 §	2.0m	550		200S	DO29
55	1N4353	20	120	1.0	2.0m	550	9.5	300S	DO7
56	1N4430	20	120	1.0	2.0m	350		175S	A266a
57	1N5589	20	120	1.0 §	2.0			200A	A60ac
58▼	SZ1-120-20-1								
		20	120	1.0	1.0m			175	u5b
59	1N4858B	5	120	1.2	2.1m	550	10	175	DO29
60	1N4858A	10	120	1.2	2.1m	550	10	175	DO29
61	1N4858	20	120	1.2	2.1m	550	10	175	DO29
62	BZD10C120	5	120	1.3	5.0m	250	13		DO13
63	BZW22C120	5	120	1.3	5.0m	300		175S	DO41
64	BZX85C120	5	120	1.3	2.0m	580	9.6	175J	DO41
65	BZY97C120	5	120	1.3	5.0m	250	13		A1rx
66	ZD120	5	120	1.3	5.0	250	10	150J	DO13
67	ZY120	5	120	1.3	5.0m	250	11	150J	A1bg
68	ZPU120	9	120	1.3	5.0m	330	13	200J	DO41
69	ZMU120	10	120	1.3	5.0m	330	13	200J	F149
70	1N5951D	1	120	1.5	3.1m	380		200J	DO41
71	1N5951C	2	120	1.5	3.1m	380		200J	DO41
72	1N3815B	5	120	1.5	3.1m	350	10	175S	C14Ø
73	1N4491	5	120	1.5	2.0m	400		175A	A60y
74	1N5951B	5	120	1.5	3.1m	380		200J	DO41
75	1S4120,A	5†	120	1.5	2.0m	230	10	150A	DO1
76▼	SZ1.5-120-5-1								
		5.0	120	1.5	1.0m			175	u5b
77	1N3815A	10	120	1.5	3.1m	350	10	175S	C14Ø
78	1N5951A	10	120	1.5	3.1m	380		200J	DO41
79▼	SZ1.5-120-10-1								
		10	120	1.5	1.0m			175	u5b
80	1N3815	20	120	1.5	3.1m	350	10	175S	C14Ø
81	1N5951	20	120	1.5	3.1m	380		200J	DO41
82▼	SZ1.5-120-20-1								
		20	120	1.5	1.0m			175	u5b
83	1N4080	5	120	2.0	2.5m	800	.50	100	A1nj
84	1N4080A	5	120	2.0	2.5m	800	.20	100	A1nj
85	2EZ120D5	5	120	2.0	4.2m	325		200J	A1ay
86	2VR120,A,B	5†	120	2.0	4.2m	500			A3e
87	BZV47C120	5	120	2.0	5.0m	250	9.5	175J	A344r
88	LMZ120A	5	120	2.0	4.0m	325	10	150A	DO41
89	ZBC120	5†	120	2.0 §	4.0m	325		150A	A1bc
90	ZBC120B	5	120	2.0	4.0m	325			A1ty
91	2EZ120D10	10	120	2.0	4.2m	325		200J	A1ay
92	LMZ120	10	120	2.0	4.0m	325	10	150A	DO41
93	ZBC120A	10	120	2.0	4.0m	325			A1ty
94	2EZ120D	20	120	2.0	4.2m	325		200J	A1ay
95	Z7A120	1†	120	2.5	100m	25	11	200J	S457Ø
96	Z2B120	5†	120	2.5	5.0m	400	11	200J	DO1
97	1N1889B	1	120	3.0	7.5m	85 †	10	200A	DO4
98	3EZ120D1	1.0	120	3.0	6.3m	300		150J	A1ay
99	3EZ120D2	2.0	120	3.0	6.3m	300		150J	A1ay
100	3EZ120D3	3.0	120	3.0	6.3m	300		150J	A1ay
101	3EZ120D4	4.0	120	3.0	6.3m	300		150J	A1ay
102	1N1889A	5	120	3.0	7.5m	85 †	10	200A	DO4
103	1N5097	5	120	3.0	5.0m	325		175A	A146u
104	3EZ120D5	5	120	3.0	6.3m	300		200J	A1ay
105	3VR120,A,B	5†	120	3.0	6.0m	275			A3al
106	MZ112	5	120	3.0	5.0m	325	10	175A	A146j
107	UZ112	5	120	3.0	5.0m	325 †	10	175A	A380
108	ZCC120	5†	120	3.0 §	5.0m	325		150A	A1ey
109	ZCC120B	5	120	3.0	5.0	325			A1ey
110	1N1889	10	120	3.0	7.5m	85 †	10	200A	DO4
111	3EZ120D10	10	120	3.0	6.3m	300		200J	A1ay
112	MZ212	10	120	3.0	5.0m	325	10	175A	A146j
113	UZ212	10	120	3.0	5.0m	325 †	10	175A	A380
114	ZCC120A	10	120	3.0	5.0	325			A1ey
115	3EZ120D	20	120	3.0	6.3m	300		200J	A1ay
116	MZ312	20	120	3.0	5.0m	325	10	175A	A146j
117	UZ312	20	120	3.0	5.0m	325 †	10	175A	A380
118▼	BZT03/D120	10	120	3.2	5.0m	250	13	175J	A94g
119	3T120,A,B	5†	120	3.5	5.0m	350			S11
120▼	SZ3-120-5-1								
		5.0	120	5.0	1.0m			175	u5c
121▼	SZ3-120-5-25								
		5.0	120	5.0	25m			175	u5c
122▼	SZ3-120-10-1								
		10	120	5.0	1.0m			175	u5c
123▼	SZ3-120-10-25								
		10	120	5.0	25m			175	u5c
124▼	SZ3-120-20-1								
		20	120	5.0	1.0m			175	u5c
125▼	SZ3-120-20-25								
		20	120	5.0	25m			175	u5c
126	1N1327	10	127	150m	200u			150A	C1
127	PS6327	15	127	.50		.20		200A	DO14
128	1N1327A	5	128	150m	200u		12	150A	C1
129	1N239	10†	128	.15	.20m			200A	C12a
130	1C3009		130		19m	100			u36
131	BZX61C130	4	130		5.0m	300	14		
132	CD5274A	5.0	130		950u	1.1k		200	u52
133	CD5381B	5	130		10m	190	10	200J	u39b
134	1N741A	5	130	250m	1.0m	650	9.6	175A	DO7
135	1N741	10	130	250m	1.0m	650	9.6	175A	DO7
136	1N741B	20	130	.25	1.0m	650			DO7
137	1N988B	5	130	400m	950u	1.1k		175S	A398a
138	CD988B	5	130	400m	950u	1.1k	11	200J	u39a
139	CD5374B	5	130	400m	950u	45	11	200J	u39a
140	CH988	5	130	400m	950u	1.1k	11	200J	u10
141	CH5274	5	130	400m	950u	1.1k	11	200J	u10
142	RD130EB	5.0	130	400m	1.0m	1.1k		175J	DO35
143	1N988A	10	130	400m	950u	1.1k		175S	A398a
144	1N988	20	130	400m	950u	1.1k		175S	A398a
145	1N5274B	5	130	500m	950u	1.1k	11	200A	A398a
146	1N6027B	5	130	500m	1.0m	950		200J	DO35
147	BZX55C130	5	130	500m	1.0m	600	9.6	175J	DO35
148▼	SZP5-130-5-1								
		5.0	130	500m	1.0m			175	u5a
149▼	SZ.5-130-5-25								
		5.0	130	500m	25m			175	u5a
150	1N5274A	10	130	500m	950u	1.1k	11	200A	A398a
151	1N5890A	10	130	500m	950u	1.6k		150C	M859
152	1N6027A	10	130	500m	1.0m	1.4k		200J	DO35
153▼	SZP5-130-10-1								
		10	130	500m	1.0m			175	u5a
154▼	SZ.5-130-10-25								
		10	130	500m	25m			175	u5a
155	1N5274	20†	130	.50	.95m			200A	A398a
156	1N6027	20	130	500m	1.0m	1.4k		200J	DO35
157▼	SZP5-130-20-1								
		20	130	500m	1.0m			175	u5a
158▼	SZ.5-130-20-25								
		20	130	500m	25m			175	u5a
159	1N3706B	5	130	750m§	950u	1.1k		175S	A1az
160	1N3706A	10	130	750m§	950u	1.1k		175S	A1az
161	1N3706	20	130	750m§	950u	1.1k		175S	A1az
162	Z4A130	1†	130	1.0	2.5m	650	11	200J	DO29
163	1EZ130D5	5	130	1.0	1.9m	910	9.5	175J	A1ay
164	1M130Z,5	5†	130	1.0	1.9m	700		175J	DO13Ø
165	1M130ZS10,5								
		5†	130	1.0	1.9m	700		200J	DO41Ø
166	1N1798A	5	130	1.0	5.0m	450		175A	DO13Ø
167	1N3047B	5	130	1.0	1.9m	700		175A	A31a
168	1N4189B	5	130	1.0 §	1.9m	700		200S	DO29
169	1N4354B	5	130	1.0	1.9m	700	9.5	300S	DO7
170	1N4431B	5	130	1.0	1.9m	500	9.5	175A	A1cm
171	1N5590B	5	130	1.0 §	1.9m	700		200A	A60ac
172	PL130Z	5	130	1.0	5.0m	300	9.5	150J	
173▼	SZ1-130-5-1								
		5.0	130	1.0	1.0m			175	u5b
174▼	SZ1-130-5-25								
		5.0	130	1.0	25m			175	u5b
175	TZB130B	5	130	1.0 §	1.0m		10	175A	A1ty
176	UZ8113	5	130	1.0	1.9m	700	10	175	A380
177	VR130,A,B	5†	130	1.0	1.9m	750		125A	A1b
178	Z4B130	5†	130	1.0	2.5m	650	11	200J	DO29
179	ZB130	5†	130	1.0 §	1.9m	700		150A	A1bc
180	ZB130B	5	130	1.0	1.9m	700		100C	A1bc
181	1EZ130D10	10	130	1.0	1.9m	910	9.5	175J	A1ay
182	1N1798	10	130	1.0	5.0m	450		175A	DO13Ø
183	1N3047A	10	130	1.0	1.9m	700		175A	A31a
184	1N4189A	10	130	1.0 §	1.9m	700		200S	DO29
185	1N4354A	10	130	1.0	1.9m	700	9.5	300S	DO7
186	1N4431A	10	130	1.0	1.9m	500	9.5	175A	A1cm
187	1N5590A	10	130	1.0 §	1.9m	700		200A	A60ac
188	1S259	10	130	1.0	3.0m	450	9.2	150J	A56a
189▼	SZ1-130-10-1								
		10	130	1.0	1.0m			175	u5b

SYMBOLS AND CODES EXPLAINED IN INTERPRETER

2. VOLTAGE REFERENCE DIODES - $V_Z \geq 100$ V (Cont'd)

IN ORDER OF: (1) REF. VOLTAGE (2) PD MAX (3) TOLERANCE & (4) TYPE NUMBER

LINE No.	4 TYPE No.	3 TOL ± (%)	1 NOM. REF. VOLT. (V)	2 PD @ 25°C MAX (W)	TEST CUR. Izt (A)	DYN. IMP. MAX (Ω)	TEMP. COEFF Tc MAX	TEMP MAX (°C)	DWG. NO.
1▼	SZ1-130-10-25								
		10	130	1.0	25m			175	u5b
2	TZB130A	10	130	1.0 §	1.0m		10	175A	A1ty
3	UZ8213	10	130	1.0	1.9m	700	10	175	A380
4	Z130	10	130	1.0	1.9m	700		200	DO41
5	ZB130A	10	130	1.0	1.9m	700		100C	A1bc
6	1EZ130D	20	130	1.0	1.9m	910	9.5	175J	A1ay
7	1N3047	20	130	1.0	1.9m	700		175A	A31a
8	1N4189	20	130	1.0 §	1.9m	700		200S	DO29
9	1N4354	20	130	1.0	1.9m	700	9.5	300S	DO7
10	1N4431	20	130	1.0	1.9m	500		175S	A266a
11	1N5590	20	130	1.0 §	1.9			200A	A60ac
12▼	SZ1-130-20-1								
		20	130	1.0	1.0m			175	u5b
13▼	SZ1-130-20-25								
		20	130	1.0	25m			175	u5b
14	1N4859B	5	130	1.2	1.9m	700	11	175	DO29
15	1N4859A	10	130	1.2	1.9m	700	11	175	DO29
16	1N4859	20	130	1.2	1.9m	700	11	175	DO29
17	BZD10C130	5	130	1.3	5.0m	300	13		DO13
18	BZW22C130	5	130	1.3	5.0m	360		175S	DO41
19	BZX85C130	5	130	1.3	1.9m	700	9.6	175J	DO41
20	BZY97C130	5	130	1.3	5.0m	300	13		A1rx
21	ZD130	5	130	1.3	5.0	300	10	150J	DO13
22	ZY130	5	130	1.3	5.0m	300	11	150J	A1bg
23	1N5952D	1	130	1.5	2.9m	450		200J	DO41
24	1N5952C	2	130	1.5	2.9m	450		200J	DO41
25	1N3816B	5	130	1.5	2.9m	400	10	175S	C14Ø
26	1N4492	5	130	1.5	1.9m	500		175A	A60y
27	1N5952B	5	130	1.5	2.9m	450		200J	DO41
28	1S4130,A	5†	130	1.5	2.0m	265	10	150A	DO1
29▼	SZ1.5-130-5-1								
		5.0	130	1.5	1.0m			175	u5b
30	1N3816A	10	130	1.5	2.9m	400	10	175S	C14Ø
31	1N5952A	10	130	1.5	2.9m	450		200J	DO41
32▼	SZ1.5-130-10-1								
		10	130	1.5	1.0m			175	u5b
33	1N3816	20	130	1.5	2.9m	400	10	175S	C14Ø
34	1N5952	20	130	1.5	2.9m	450		200J	DO41
35▼	SZ1.5-130-20-1								
		20	130	1.5	1.0m			175	u5b
36	2EZ130D5	5	130	2.0	3.8m	400		200J	A1ay
37	2VR130,A,B	5†	130	2.0	3.8m	600			A3e
38	BZV47C130	5	130	2.0	5.0m	300	9.5	175J	A344r
39	LMZ130A	5	130	2.0	4.0m	400	10	150A	DO41
40	ZBC130	5†	130	2.0 §	3.8m	375		150A	A1bc
41	ZBC130B	5	130	2.0	3.8m	375			A1ty
42	2EZ130D10	10	130	2.0	3.8m	400		200J	A1ay
43	LMZ130	10	130	2.0	4.0m	400	10	150A	DO41
44	ZBC130A	10	130	2.0	3.8m	375			A1ty
45	2EZ130D	20	130	2.0	3.8m	400		200J	A1ay
46	Z7A130	1†	130	2.5	100m	30	11	200J	S457Ø
47	1N4081	5	130	2.5	2.5m	840	.50	100	A1su
48	1N4081A	5	130	2.5	2.5m	840	.20	100	A1su
49	Z2B130	5†	130	2.5	5.0m	450	11	200J	DO1
50	3EZ130D1	1.0	130	3.0	5.8m	375		150J	A1ay
51	3EZ130D2	2.0	130	3.0	5.8m	375		150J	A1ay
52	3EZ130D3	3.0	130	3.0	5.8m	375		150J	A1ay
53	3EZ130D4	4.0	130	3.0	5.8m	375		150J	A1ay
54	1N5098	5	130	3.0	5.0m	375		175A	A146u
55	3EZ130D5	5	130	3.0	5.8m	375		200J	A1ay
56	3VR130,A,B	5†	130	3.0	5.7m	350			A3al
57	MZ113	5	130	3.0	5.0m	375	10	175A	A146j
58	UZ113	5	130	3.0	5.0m	375 †		175A	A380
59	ZCC130	5†	130	3.0 §	5.0m	375		150A	A1ey
60	ZCC130B	5	130	3.0	5.0	375			A1ey
61	3EZ130D10	10	130	3.0	5.8m	375		200J	A1ay
62	MZ213	10	130	3.0	5.0m	375	10	175A	A146j
63	UZ213	10	130	3.0	5.0m	375 †	10	175A	A380
64	ZCC130A	10	130	3.0	5.0	375			A1ey
65	3EZ130D	20	130	3.0	5.8m	375		200J	A1ay
66	MZ313	20	130	3.0	5.0m	375	10	175A	A146j
67	UZ313	20	130	3.0	5.0m	375 †	10	175A	A380
68▼	BZT03/D130	10	130	3.2	5.0m	300	13	175J	A94g
69	3T130,A,B	5†	130	3.5	5.0m	450			S11
70▼	SZ3-130-5-1								
		5.0	130	5.0	1.0m			175	u5c
71▼	SZ3-130-5-25								
		5.0	130	5.0	25m			175	u5c
72▼	SZ3-130-10-1								
		10	130	5.0	1.0m			175	u5c
73▼	SZ3-130-10-25								
		10	130	5.0	25m			175	u5c
74▼	SZ3-130-20-1								
		20	130	5.0	1.0m			175	u5c
75▼	SZ3-130-20-25								
		20	130	5.0	25m			175	u5c
76	Z135	20	135	500m	5.0m	1.0k		175A	DO41
77	3KZ150	10†	135	3.0 §	8.0m		.10		A3ak§
78	1C3010		140		18m	125			u36
79	Z140		140		5.0m	1.2k		175A	DO41
80	CD5275A	5.0	140		900u	1.3k		200	u52
81	CD5382B	5	140		8.0m	230	10	200J	u39b
82	CD5375B	5	140	400m	900u	65	11	200J	u39a
83	CH5275	5	140	400m	900u	1.3k	11	200J	u10
84	RD140EB	5.0	140	400m	1.0m	1.3k		175J	DO35
85	1N5275B	5	140	500m	900u	1.3k	11	200A	A398a
86▼	SZP5-140-5-1								
		5.0	140	500m	1.0m			175	u5a
87▼	SZ.5-140-5-25								
		5.0	140	500m	25m			175	u5a
88	1N5275A	10	140	500m	900u	1.3k	11	200A	A398a
89	1N5891A	10	140	500m	900u	1.8k		150C	M859
90▼	SZP5-140-10-1								
		10	140	500m	1.0m			175	u5a
91▼	SZ.5-140-10-25								
		10	140	500m	25m			175	u5a
92	1N5275	20†	140	.50	.90m			200A	A398a
93▼	SZP5-140-20-1								
		20	140	500m	1.0m			175	u5a
94▼	SZ.5-140-20-25								
		20	140	500m	25m			175	u5a
95	1EZ140D5	5	140	1.0	1.8m	1.1k	9.5	175J	A1ay
96▼	SZ1-140-5-1								
		5.0	140	1.0	1.0m			175	u5b
97▼	SZ1-140-5-25								
		5.0	140	1.0	25m			175	u5b
98	UZ8114	5	140	1.0	1.8m	850	10	175	A380
99	1EZ140D10	10	140	1.0	1.8m	1.1k	9.5	175J	A1ay
100	1S260	10	140	1.0	3.0m	500	9.3	150J	A56a
101▼	SZ1-140-10-1								
		10	140	1.0	1.0m			175	u5b
102▼	SZ1-140-10-25								
		10	140	1.0	25m			175	u5b
103	UZ8214	10	140	1.0	1.8m	850	10	175	A380
104	1EZ140D	20	140	1.0	1.8m	1.1k	9.5	175J	A1ay
105▼	SZ1-140-20-1								
		20	140	1.0	1.0m			175	u5b
106▼	SZ1-140-20-25								
		20	140	1.0	25m			175	u5b
107▼	SZ1.5-140-5-1								
		5.0	140	1.5	1.0m			175	u5b
108▼	SZ1.5-140-10-1								
		10	140	1.5	1.0m			175	u5b
109▼	SZ1.5-140-20-1								
		20	140	1.5	1.0m			175	u5b
110	2EZ140D5	5	140	2.0	3.6m	500		200J	A1ay
111	ZBC140	5†	140	2.0 §	3.6m	550		150A	A1bc
112	ZBC140B	5	140	2.0	3.6m	550			A1ty
113	2EZ140D10	10	140	2.0	3.6m	500		200J	A1ay
114	ZBC140A	10	140	2.0	3.6m	550			A1ty
115	2EZ140D	20	140	2.0	3.6m	500		200J	A1ay
116	1N4082	5	140	2.5	2.5m	960	.50	100	A1su
117	1N4082A	5	140	2.5	2.5m	960	.20	100	A1su
118	3EZ140D1	1.0	140	3.0	5.3m	475		150J	A1ay
119	3EZ140D2	2.0	140	3.0	5.3m	475		150J	A1ay
120	3EZ140D3	3.0	140	3.0	5.3m	475		150J	A1ay
121	3EZ140D4	4.0	140	3.0	5.3m	475		150J	A1ay
122	3EZ150D4	4.0	140	3.0	5.0m	550		150J	A1ay
123	1N5099	5	140	3.0	5.0m	550		175A	A146u
124	3EZ140D5	5	140	3.0	5.3m	475		200J	A1ay
125	MZ114	5	140	3.0	5.0m	550	10	175A	A146j
126	UZ114	5	140	3.0	5.0m	550	10	175A	A380
127	ZCC140	5†	140	3.0 §	5.0m	550		150A	A1ey
128	ZCC140B	5	140	3.0	5.0	550			A1ey
129	3EZ140D10	10	140	3.0	5.3m	475		200J	A1ay
130	MZ214	10	140	3.0	5.0m	550	10	175A	A146j
131	UZ214	10	140	3.0	5.0m	550	10	175A	A380
132	ZCC140A	10	140	3.0	5.0	550			A1ey
133	3EZ140D	20	140	3.0	5.3m	475		200J	A1ay
134	MZ314	20	140	3.0	5.0m	550	10	175A	A146j
135	UZ314	20	140	3.0	5.0m	550	10	175A	A380
136▼	SZ3-140-5-1								
		5.0	140	5.0	1.0m			175	u5c
137▼	SZ3-140-5-25								
		5.0	140	5.0	25m			175	u5c
138▼	SZ3-140-10-1								
		10	140	5.0	1.0m			175	u5c
139▼	SZ3-140-10-25								
		10	140	5.0	25m			175	u5c
140▼	SZ3-140-20-1								
		20	140	5.0	1.0m			175	u5c
141▼	SZ3-140-20-25								
		20	140	5.0	25m			175	u5c
142	3KZ160	10†	144	3.0 §	8.0m		.10		A3ak§
143	1N1946B	1	145	200m	100u			150	DO7
144	1N1946A	5	145	200m	100u			150	DO7
145	1N1946	10	145	200m	100u			150	DO7
146	1N3099A	10	145	1.0	3.0m	600		130C	A86c
147	1N3099	20	145	1.0	3.0m	600		130C	A86c
148	1N1890B	1	145	3.0	7.5m	110 †	12	200A	DO4
149	1N1890A	5	145	3.0	7.5m	110 †	12	200A	DO4
150	1N1890	10	145	3.0	7.5m	110 †	12	200A	DO4
151	ZMU150	10	147	1.3	5.0m	360	13	200J	F149
152	1C3011		150		17m	175			u36
153	CD5276A	5.0	150		850u	1.5k		200	u52
154	CD5383B	5	150		8.0m	330	10	200J	u39b
155	BZX61C150	8	150		2.0m	950	15		
156	1N2000B	1	150	150m	100u			150	C1
157	1N2000A	5	150	150m	100u			150	C1
158	1N2000	10	150	150m	100u			150	C1
159	1N742A	5	150	250m	1.0m	860	9.6	175A	DO7
160	1N742	10	150	250m	1.0m	860	9.6	175A	DO7
161	1N742B	20	150	.25	1.0m	860			DO7
162	1N672	5	150	400m	500u	2.0k	10	150A	A87
163	1N989B	5	150	400m	850u	1.5k		175S	A398a
164	CD989B	5	150	400m	850u	1.5k	11	200J	u39a
165	CD5376B	5	150	400m	850u	75	11	200J	u39a
166	CH989	5	150	400m	850u	1.5k	11	200J	u10
167	CH5276	5	150	400m	850u	1.5k	11	200J	u10
168	RD150EB	5.0	150	400m	1.0m	1.5k		175J	DO35
169	1N989A	10	150	400m	850u	1.5k		175S	A398a
170	1N989	20	150	400m	850u	1.5k		175S	A398a
171	1N6028B	5	150	500m	1.0m	1.2k		200J	DO35
172	BZX55C150	5	150	500m	1.0m	800	9.6	175J	DO35
173▼	SZP5-150-5-1								
		5.0	150	500m	1.0m			175	u5a
174▼	SZ.5-150-5-25								
		5.0	150	500m	25m			175	u5a
175	1N3430	10	150	.50	1.0m	1.8k	8.7	200A	P5
176	1N5276A	10	150	500m	8.5m	1.5k	11	200A	A398a
177	1N5276B	10	150	500m	8.5m	1.5k	11	200A	A398a
178	1N5892A	10	150	500m	850u	2.1k		150C	M859
179	1N6028A	10	150	500m	1.0m	1.7k		200J	DO35
180▼	SZP5-150-10-1								
		10	150	500m	1.0m			175	u5a
181▼	SZ.5-150-10-25								
		10	150	500m	25m			175	u5a
182	1N5276	20†	150	.50	.85m			200A	A398a
183	1N6028	20	150	500m	1.0m	1.7k		200J	DO35

SYMBOLS AND CODES EXPLAINED IN INTERPRETER

2. VOLTAGE REFERENCE DIODES - $V_Z \geq 100$ V (Cont'd)

IN ORDER OF: (1) REF. VOLTAGE (2) PD MAX (3) TOLERANCE & (4) TYPE NUMBER

LINE No.	4 TYPE No.	3 TOL ± (%)	1 NOM. REF. VOLT. (V)	2 PD @ 25°C MAX (W)	TEST CUR. Izt (A)	DYN. IMP. MAX (Ω)	TEMP. COEFF Tc MAX	TEMP MAX (°C)	DWG. NO.
1▼	SZP5-150-20-1								
		20	150	500m	1.0m			175	u5a
2▼	SZ.5-150-20-25								
		20	150	500m	25m			175	u5a
3	1N3707B	5	150	750m§	850u	1.5k		175S	A1az
4	1N3707A	10	150	750m§	850u	1.5k		175S	A1az
5	1N3707	20	150	750m§	850u	1.5k		175S	A1az
6	Z4A150	1†	150	1.0	2.5m	800	11	200J	DO29
7	1EZ150D5	5	150	1.0	1.7m	1.3k	9.5	175J	A1ay
8	1M150Z,5	5†	150	1.0	1.7m	1.0k		175J	DO13Ø
9	1N1433	5	150	1.0	1.0m	1.2k†	10	200A	A154
10	1N1799A	5	150	1.0	5.0m	600		175A	DO13Ø
11	1N3048B	5	150	1.0	1.7m	1.0k		175A	A31a
12	1N4190B	5	150	1.0 §	1.7m	1.0k		200S	DO29
13	1N4355B	5	150	1.0	1.7m	1.0k	9.5	300S	DO7
14	1N4432B	5	150	1.0	1.7m	800	9.5	175A	A1cm
15	1N5591B	5	150	1.0 §	1.7m	1.0k		200A	A60ac
16	PL150Z	5	150	1.0	5.0m	300	9.5	150J	
17▼	SZ1-150-5-1								
		5.0	150	1.0	1.0m			175	u5b
18▼	SZ1-150-5-25								
		5.0	150	1.0	25m			175	u5b
19	TZB150B	5	150	1.0 §	1.0m		10	175A	A1ty
20	UZ8115	5	150	1.0	1.7m	1.0k	10	175	A380
21	VR150,A,B	5†	150	1.0	1.7m	1.0k		125A	A1b
22	Z4B150	5†	150	1.0	2.5m	800	11	200J	DO29
23	ZB150	5†	150	1.0 §	1.7m	1.0k		150A	A1bc
24	ZB150B	5	150	1.0	1.7m	1.0k		100C	A1bc
25	1EZ150D10	10	150	1.0	1.7m	1.3k	9.5	175J	A1ay
26	1N1799	10	150	1.0	5.0m	600		175A	DO13Ø
27	1N3048A	10	150	1.0	1.7m	1.0k		175A	A31a
28	1N4190A	10	150	1.0 §	1.7m	1.0k		200S	DO29
29	1N4355A	10	150	1.0	1.7m	1.0k	9.5	300S	DO7
30	1N4432A	10	150	1.0	1.7m	800	9.5	175A	A1cm
31	1N5591A	10	150	1.0 §	1.7m	1.0k		200A	A60ac
32	1S261	10	150	1.0	3.0m	600	9.3	150J	A56a
33▼	SZ1-150-10-1								
		10	150	1.0	1.0m			175	u5b
34▼	SZ1-150-10-25								
		10	150	1.0	25m			175	u5b
35	TZB150A	10	150	1.0 §	1.0m		10	175A	A1ty
36	UZ8215	10	150	1.0	1.7m	1.0k	10	175	A380
37	Z150	10	150	1.0	1.7m	1.0k		200	DO41
38	ZB150A	10	150	1.0	1.7m	1.0k		100C	A1bc
39	1EZ150D	20	150	1.0	1.7m	1.3k	9.5	175J	A1ay
40	1N3048	20	150	1.0	1.7m	1.0k		175A	A31a
41	1N4190	20	150	1.0 §	1.7m	1.0k		200S	DO29
42	1N4355	20	150	1.0	1.7m	1.0k	9.5	300S	DO7
43	1N4432	20	150	1.0	1.7m	800		175S	A266a
44	1N5591	20	150	1.0 §	1.7			200A	A60ac
45▼	SZ1-150-20-1								
		20	150	1.0	1.0m			175	u5b
46▼	SZ1-150-20-25								
		20	150	1.0	25m			175	u5b
47	1N4860B	5	150	1.2	1.7m	1.0k	11	175	DO29
48	1N4860A	10	150	1.2	1.7m	1.0k	11	175	DO29
49	1N4860	20	150	1.2	1.7m	1.0k	11	175	DO29
50	BZW22C150	5	150	1.3	5.0m	360		175S	DO41
51	BZX85C150	5	150	1.3	1.7m	1.0k	9.6	175J	DO41
52	BZY97C150	5	150	1.3	5.0m	300	13		A1rx
53	ZD150	5	150	1.3	5.0	300	10	150J	DO13
54	ZY150	5	150	1.3	5.0m	300	11	150J	A1bg
55	BZD10C150	8	150	1.3	5.0m	300	13		DO13
56	ZPU150	11	150	1.3	5.0m	360	13	200J	DO41
57	1N5953D	1	150	1.5	2.5m	600		200J	DO41
58	1N5953C	2	150	1.5	2.5m	600		200J	DO41
59	1N3817B	5	150	1.5	2.5m	700	10	175S	C14Ø
60	1N4493	5	150	1.5	1.7m	700		175A	A60y
61	1N5953B	5	150	1.5	2.5m	600		200J	DO41
62	1S4150,A	5†	150	1.5	2.0m	300	10	150A	DO1
63▼	SZ1.5-150-5-1								
		5.0	150	1.5	1.0m			175	u5b
64	1N3817A	10	150	1.5	2.5m	700	10	175S	C14Ø
65	1N5953A	10	150	1.5	2.5m	600		200J	DO41
66▼	SZ1.5-150-10-1								
		10	150	1.5	1.0m			175	u5b
67	1N3817	20	150	1.5	2.5m	700	10	175S	C14Ø
68	1N5953	20	150	1.5	2.5m	600		200J	DO41
69▼	SZ1.5-150-20-1								
		20	150	1.5	1.0m			175	u5b
70	2EZ150D5	5	150	2.0	3.3m	575		200J	A1ay
71	2VR150,A,B	5†	150	2.0	3.3m	900			A3e
72	BZV47C150	5	150	2.0	5.0m	300	9.5	175J	A344r
73	LMZ150A	5	150	2.0	3.5m	575	10	150A	DO41
74	ZBC150	5†	150	2.0 §	3.4m	625		150A	A1bc
75	ZBC150B	5	150	2.0	3.4m	625			A1ty
76	2EZ150D10	10	150	2.0	3.3m	575		200J	A1ay
77	LMZ150	10	150	2.0	3.5m	575	10	150A	DO41
78	ZBC150A	10	150	2.0	3.4m	625			A1ty
79	2EZ150D	20	150	2.0	3.3m	575		200J	A1ay
80	Z7A150	1†	150	2.5	100m	40	11	200J	S457Ø
81	1N4083	5	150	2.5	2.5m	1.0k	.50	100	A1su
82	1N4083A	5	150	2.5	2.5m	1.0k	.20	100	A1su
83	Z2B150	5†	150	2.5	5.0m	500	11	200J	DO1
84	3EZ150D1	1.0	150	3.0	5.0m	550		150J	A1ay
85	3EZ150D2	2.0	150	3.0	5.0m	550		150J	A1ay
86	3EZ150D3	3.0	150	3.0	5.0m	550		150J	A1ay
87	1N4098	5	150	3.0	5.0m	650		200S	A146
88	3EZ150D5	5	150	3.0	5.0m	550		200J	A1ay
89	3VR150,A,B	5†	150	3.0	5.0m	500			A3al
90	MZ115	5	150	3.0	5.0m	650	10	175A	A146j
91	UZ115	5	150	3.0	5.0m	650	10	175A	A380
92	ZCC150	5†	150	3.0 §	5.0m	625		150A	A1ey
93	ZCC150B	5	150	3.0	5.0m	625			A1ey
94	3EZ150D10	10	150	3.0	5.0m	550		200J	A1ay
95	MZ215	10	150	3.0	5.0m	650	10	175A	A146j
96	UZ215	10	150	3.0	5.0m	650	10	175A	A380
97	ZCC150A	10	150	3.0	5.0m	625			A1ey
98	3EZ150D	20	150	3.0	5.0m	550		200J	A1ay
99	MZ315	20	150	3.0	5.0m	650	10	175A	A146j
100	UZ315	20	150	3.0	5.0m	650	10	175A	A380
101▼	BZT03/D150	10	150	3.2	5.0m	300	13	175J	A94g
102	3T150,A,B	5†	150	3.5	5.0m	600			S11
103▼	SZ3-150-5-1								
		5.0	150	5.0	1.0m			175	u5c
104▼	SZ3-150-5-25								
		5.0	150	5.0	25m			175	u5c
105▼	SZ3-150-10-1								
		10	150	5.0	1.0m			175	u5c
106▼	SZ3-150-10-25								
		10	150	5.0	25m			175	u5c
107▼	SZ3-150-20-1								
		20	150	5.0	1.0m			175	u5c
108▼	SZ3-150-20-25								
		20	150	5.0	25m			175	u5c
109	1C3012		160		16m	200			u36
110	CD5384B	5	160		8.0m	350	10	200J	u39b
111	BZX61C160	7	160		2.0m	1.0k	15		
112	1N743A	5	160	250m	1.0m	970	9.6	175A	DO7
113	1N743	10	160	250m	1.0m	970	9.6	175A	DO7
114	1N743B	20	160	.25	1.0m	970			DO7
115	1N990B	5	160	400m	800u	1.7k		175S	A398a
116	CD990B	5	160	400m	800u	1.7k	11	200J	u39a
117	CD5277B	5	160	400m	800u	1.7k	11	200J	u39a
118	CH990	5	160	400m	800u	1.7k	11	200J	u10
119	CH5277	5	160	400m	800u	1.7k	11	200J	u10
120	RD160EB	5.0	160	400m	1.0m	1.7k		175J	DO35
121	1N990A	10	160	400m	800u	1.7k		175S	A398a
122	1N990	20	160	400m	800u	1.7k		175S	A398a
123	1N5277B	5	160	500m	800u	1.7k	11	200A	A398a
124	1N6029B	5	160	500m	1.0m	1.4k		200J	DO35
125	BZX55C160	5	160	500m	1.0m	1.0k	9.6	175J	DO35
126▼	SZP5-160-5-1								
		5.0	160	500m	1.0m			175	u5a
127▼	SZ.5-160-5-25								
		5.0	160	500m	25m			175	u5a
128	1N5277A	10	160	500m	800u	1.7k	11	200A	A398a
129	1N5893A	10	160	500m	800u	2.3k		150C	M859
130	1N6029A	10	160	500m	1.0m	2.0k		200J	DO35
131▼	SZP5-160-10-1								
		10	160	500m	1.0m			175	u5a
132▼	SZ.5-160-10-25								
		10	160	500m	25m			175	u5a
133	1N5277	20†	160	.50	.80m			200A	A398a
134	1N6029	20	160	500m	1.0m	2.0k		200J	DO35
135▼	SZP5-160-20-1								
		20	160	500m	1.0m			175	u5a
136▼	SZ.5-160-20-25								
		20	160	500m	25m			175	u5a
137	1N3708B	5	160	750m§	750u	1.7k		175S	A1az
138	1N3708A	10	160	750m§	750u	1.7k		175S	A1az
139	1N3708	20	160	750m§	750u	1.7k		175S	A1az
140	Z4A160	1†	160	1.0	2.5m	1.0k	11	200J	DO29
141	1EZ160D5	5	160	1.0	1.6m	1.4k	9.5	175J	A1ay
142	1M160Z,5	5†	160	1.0	1.6m	1.1k		175J	DO13Ø
143	1N1800A	5	160	1.0	5.0m	700		175A	DO13Ø
144	1N3049B	5	160	1.0	1.6m	1.1k		175A	A31a
145	1N4191B	5	160	1.0 §	1.6m	1.1k		200S	DO29
146	1N4356B	5	160	1.0	1.6m	1.1k	9.5	300S	DO7
147	1N5592B	5	160	1.0 §	1.6m	1.1k		200A	A60ac
148	PL160Z	5	160	1.0	5.0m	350	9.5	150J	
149▼	SZ1-160-5-1								
		5.0	160	1.0	1.0m			175	u5b
150▼	SZ1-160-5-25								
		5.0	160	1.0	25m			175	u5b
151	TZB160B	5	160	1.0 §	1.0m		10	175A	A1ty
152	UZ8116	5	160	1.0	1.6m	1.1k	10	175	A380
153	VR160,A,B	5†	160	1.0	1.6m	1.1k		125A	A1b
154	Z4B160	5†	160	1.0	2.5m	1.0k	11	200J	DO29
155	ZB160	5†	160	1.0 §	1.6m	1.1k		150A	A1bc
156	ZB160B	5	160	1.0	1.6m	1.1k		100C	A1bc
157	1EZ160D10	10	160	1.0	1.6m	1.4k	9.5	175J	A1ay
158	1N1800	10	160	1.0	5.0m	700		175A	DO13Ø
159	1N3049A	10	160	1.0	1.6m	1.1k		175A	A31a
160	1N4191A	10	160	1.0 §	1.6m	1.1k		200S	DO29
161	1N4356A	10	160	1.0	1.6m	1.1k	9.5	300S	DO7
162	1N5592A	10	160	1.0 §	1.6m	1.1k		200A	A60ac
163▼	SZ1-160-10-1								
		10	160	1.0	1.0m			175	u5b
164▼	SZ1-160-10-25								
		10	160	1.0	25m			175	u5b
165	TZB160A	10	160	1.0 §	1.0m		10	175A	A1ty
166	UZ8216	10	160	1.0	1.6m	1.1k	10	175	A380
167	Z160	10	160	1.0	1.6m	1.1k		200	DO41
168	ZB160A	10	160	1.0	1.6m	1.1k		100C	A1bc
169	1EZ160D	20	160	1.0	1.6m	1.4k	9.5	175J	A1ay
170	1N3049	20	160	1.0	1.6m	1.1k		175A	A31a
171	1N4191	20	160	1.0 §	1.6m	1.1k		200S	DO29
172	1N4356	20	160	1.0	1.6m	1.1k	9.5	300S	DO7
173	1N4433	20	160	1.0	1.6m	1.0k		175S	A266a
174	1N5592	20	160	1.0 §	1.6			200A	A60ac
175▼	SZ1-160-20-1								
		20	160	1.0	1.0m			175	u5b
176▼	SZ1-160-20-25								
		20	160	1.0	25m			175	u5b
177	BZD10C160	5	160	1.3	5.0m	350	13		DO13
178	BZW22C160	5	160	1.3	5.0m	450		175S	DO41
179	BZX85C160	5	160	1.3	1.6m	1.1k	9.6	175J	DO41
180	BZY97C160	5	160	1.3	5.0m	350	13		A1rx
181	ZD160	5	160	1.3	5.0	350	10	150J	DO13
182	ZY160	5	160	1.3	5.0m	350	11	150J	A1bg
183	1N5954D	1	160	1.5	2.3m	700		200J	DO41
184	1N5954C	2	160	1.5	2.3m	700		200J	DO41
185	1N3818B	5	160	1.5	2.3m	750	10	175S	C14Ø
186	1N4494	5	160	1.5	1.6m	1.0k		175A	A60y
187	1N5954B	5	160	1.5	2.3m	700		200J	DO41
188	1S4160,A	5†	160	1.5	2.0m	395	10	150A	DO1
189▼	SZ1.5-160-5-1								
		5.0	160	1.5	1.0m			175	u5b
190	ZGP10-160B	5	160	1.5	5m	1.1k		175A	DO41

SYMBOLS AND CODES EXPLAINED IN INTERPRETER

2. VOLTAGE REFERENCE DIODES - $V_Z \geq 100$ V (Cont'd)

IN ORDER OF: (1) REF. VOLTAGE (2) PD MAX (3) TOLERANCE & (4) TYPE NUMBER

LINE No.	4 TYPE No.	3 TOL ± (%)	1 NOM. REF. VOLT. (V)	2 PD @ 25°C MAX (W)	TEST CUR. Izt (A)	DYN. IMP. MAX (Ω)	TEMP. COEFF Tc MAX	TEMP MAX (°C)	DWG. NO.
1	1N3818A	10	160	1.5	2.3m	750	10	175S	C14Ø
2	1N5954A	10	160	1.5	2.3m	700		200J	DO41
3▼	SZ1.5-160-10-1								
		10	160	1.5	1.0m			175	u5b
4	ZGP10-160A	10	160	1.5	5m	1.1k		175A	DO41
5	1N3818	20	160	1.5	2.3m	750	10	175S	C14Ø
6	1N5954	20	160	1.5	2.3m	700		200J	DO41
7▼	SZ1.5-160-20-1								
		20	160	1.5	1.0m			175	u5b
8	ZGP10-160	20	160	1.5	5m	1.1k		175A	DO41
9	2EZ160D5	5	160	2.0	3.1m	650		200J	A1ay
10	2VR160,A,B	5†	160	2.0	3.1m	1.0k			A3e
11	BZV47C160	5	160	2.0	5.0m	350	9.5	175J	A344r
12	LMZ160A	5	160	2.0	3.0m	650	10	150A	DO41
13	ZBC160	5†	160	2.0 §	3.2m	700		150A	A1bc
14	ZBC160B	5	160	2.0	3.2m	700			A1ty
15	2EZ160D10	10	160	2.0	3.1m	650		200J	A1ay
16	LMZ160	10	160	2.0	3.0m	650	10	150A	DO41
17	ZBC160A	10	160	2.0	3.2m	700			A1ty
18	2EZ160D	20	160	2.0	3.1m	650		200J	A1ay
19	Z7A160	1†	160	2.5	100m	50	11	200J	S457Ø
20	Z2B160	5†	160	2.5	5.0m	750	11	200J	DO1
21	3EZ160D1	1.0	160	3.0	4.7m	625		150J	A1ay
22	3EZ160D2	2.0	160	3.0	4.7m	625		150J	A1ay
23	3EZ160D3	3.0	160	3.0	4.7m	625		150J	A1ay
24	3EZ160D4	4.0	160	3.0	4.7m	625		150J	A1ay
25	1N5100	5	160	3.0	4.0m	700		175A	A146u
26	3EZ160D5	5	160	3.0	4.7m	625		200J	A1ay
27	3VR160,A,B	5†	160	3.0	4.8m	550			A3al
28	MZ116	5	160	3.0	4.0m	700	10	175A	A146j
29	UZ116	5	160	3.0	4.0m	700	10	175A	A380
30	ZCC160	5†	160	3.0 §	4.0m	700		150A	A1ey
31	ZCC160B	5	160	3.0	4.0m	700			A1ey
32	3EZ160D10	10	160	3.0	4.7m	625		200J	A1ay
33	MZ216	10	160	3.0	4.0	700	10	175A	A146j
34	UZ216	10	160	3.0	4.0m	700	10	175A	A380
35	ZCC160A	10	160	3.0	4.0m	700			A1ey
36	3EZ160D	20	160	3.0	4.7m	625		200J	A1ay
37	MZ316	20	160	3.0	4.0m	700	10	175A	A146j
38	UZ316	20	160	3.0	4.0m	700	10	175A	A380
39▼	BZT03/D160	10	160	3.2	5.0m	350	13	175J	A94g
40	3T160,A,B	5†	160	3.5	5.0m	700			S11
41▼	SZ3-160-5-1								
		5.0	160	5.0	1.0m			175	u5c
42▼	SZ3-160-5-25								
		5.0	160	5.0	25m			175	u5c
43▼	SZ3-160-10-1								
		10	160	5.0	1.0m			175	u5c
44▼	SZ3-160-10-25								
		10	160	5.0	25m			175	u5c
45▼	SZ3-160-20-1								
		20	160	5.0	1.0m			175	u5c
46▼	SZ3-160-20-25								
		20	160	5.0	25m			175	u5c
47	3KZ180	10†	162	3.0 §	5.0m		.11		A3ak§
48	Z170		170		5.0m	2.2k		175A	DO41
49	CD5385B	5	170		8.0m	380	10	200J	u39b
50	CD5278B	5	170	400m	740u	1.9k	11	200J	u39a
51	CH5278	5	170	400m	740u	1.9k	11	200J	u10
52	RD170EB	5.0	170	400m	1.0m	1.9k		175J	DO35
53	1N5278B	5	170	500m	740u	1.9k	11	200A	A398a
54▼	SZP5-170-5-1								
		5.0	170	500m	1.0m			175	u5a
55▼	SZ.5-170-5-25								
		5.0	170	500m	25m			175	u5a
56	1N5278A	10	170	500m	740u	1.9k	11	200A	A398a
57	1N5894A	10	170	500m	740u	2.6k		150C	M859
58▼	SZP5-170-10-1								
		10	170	500m	1.0m			175	u5a
59▼	SZ.5-170-10-25								
		10	170	500m	25m			175	u5a
60	1N5278	20†	170	.50	.74m			200A	A398a
61▼	SZP5-170-20-1								
		20	170	500m	1.0M			175	u5a
62▼	SZ.5-170-20-25								
		20	170	500m	25m			175	u5a
63	1EZ170D5	5	170	1.0	1.5m	1.4k	9.5	150J	A1ay
64▼	SZ1-170-5-1								
		5.0	170	1.0	1.0m			175	u5b
65▼	SZ1-170-5-25								
		5.0	170	1.0	25m			175	u5b
66	TZB170B	5	170	1.0 §	1.0m		10	175A	A1ty
67	UZ8117	5	170	1.0	1.5m	1.2k	10	175	A380
68	1EZ170D10	10	170	1.0	1.5m	1.4k	9.5	150J	A1ay
69▼	SZ1-170-10-1								
		10	170	1.0	1.0m			175	u5b
70▼	SZ1-170-10-25								
		10	170	1.0	25m			175	u5b
71	TZB170A	10	170	1.0 §	1.0m		10	175A	A1ty
72	UZ8217	10	170	1.0	1.5m	1.2k	10	175	A380
73	1EZ170D	20	170	1.0	1.5m	1.4k	9.5	150J	A1ay
74▼	SZ1-170-20-1								
		20	170	1.0	1.0m			175	u5b
75▼	SZ1-170-20-25								
		20	170	1.0	25m			175	u5b
76▼	SZ1.5-170-5-1								
		5.0	170	1.5	1.0m			175	u5b
77	ZGP10-170B	5	170	1.5	5m	1.2k		175A	DO41
78▼	SZ1.5-170-10-1								
		10	170	1.5	1.0m			175	u5b
79	ZGP10-170A	10	170	1.5	5m	1.2k		175A	DO41
80▼	SZ1.5-170-20-1								
		20	170	1.5	1.0m			175	u5b
81	ZGP10-170	20	170	1.5	5m	1.2k		175A	DO41
82	2EZ170D5	5	170	2.0	2.9m	675		200J	A1ay
83	2EZ170D10	10	170	2.0	2.9m	675		200J	A1ay
84	2EZ170D	20	170	2.0	2.9m	675		200J	A1ay
85	3EZ170D1	1.0	170	3.0	4.4m	650		150J	A1ay
86	3EZ170D2	2.0	170	3.0	4.4m	650		150J	A1ay
87	3EZ170D3	3.0	170	3.0	4.4m	650		150J	A1ay
88	3EZ170D4	4.0	170	3.0	4.4m	650		150J	A1ay
89	1N5101	5	170	3.0	4.0m	750		175A	A146u
90	3EZ170D5	5	170	3.0	4.4m	650		200J	A1ay
91	MZ117	5	170	3.0	4.0m	750	10	175A	A146j
92	UZ117	5	170	3.0	4.0m	750	10	175A	A380
93	3EZ170D10	10	170	3.0	4.4m	650		200J	A1ay
94	MZ217	10	170	3.0	4.0m	750	10	175A	A146j
95	UZ217	10	170	3.0	4.0m	750	10	175A	A380
96	3EZ170D	20	170	3.0	4.4m	650		200J	A1ay
97	MZ317	20	170	3.0	4.0m	750	10	175A	A146j
98	UZ317	20	170	3.0	4.0m	750	10	175A	A380
99▼	SZ3-170-5-1								
		5.0	170	5.0	1.0m			175	u5c
100▼	SZ3-170-5-25								
		5.0	170	5.0	25m			175	u5c
101▼	SZ3-170-10-1								
		10	170	5.0	1.0m			175	u5c
102▼	SZ3-170-10-25								
		10	170	5.0	25m			175	u5c
103▼	SZ3-170-20-1								
		20	170	5.0	1.0m			175	u5c
104▼	SZ3-170-20-25								
		20	170	5.0	25m			175	u5c
105	1N4084	5	175	2.5	2.5m	1.1k	.50	100	A1su
106	1N4084A	5	175	2.5	2.5m	1.1k	.20	100	A1su
107	1C3014		180		14m	260			u36
108	CD5386B	5	180		5.0m	430	10	200J	u39b
109	BZX61C180	6	180		2.0m	1.1k	15		
110	1N2001B	1	180	150m	100u			150	C1
111	1N2001A	5	180	150m	100u			150	C1
112	1N2001	10	180	150m	100u			150	C1
113	1N1947B	1	180	200m	100u			150	DO7
114	1N1947A	5	180	200m	100u			150	DO7
115	1N1947	10	180	200m	100u			150	DO7
116	1N744A	5	180	250m	1.0m	1.2k	9.6	175A	DO7
117	1N744	10	180	250m	1.0m	1.2k	9.6	175A	DO7
118	1N744B	20	180	.25	1.0m	1.2k			DO7
119	1N991B	5	180	400m	680u	2.2k		175S	A398a
120	CD991B	5	180	400m	680u	2.2k	11	200J	u39a
121	CD5279B	5	180	400m	680u	2.2k	11	200J	u39a
122	CH991	5	180	400m	680u	2.2k	11	200J	u10
123	CH5279	5	180	400m	680u	2.2k	11	200J	u10
124	RD180EB	5.0	180	400m	1.0m	2.2k		175J	DO35
125	1N991A	10	180	400m	680u	2.2k		175S	A398a
126	1N991	20	180	400m	680u	2.2k		175S	A398a
127	1N5279B	5	180	500m	680u	2.2k	11	200A	A398a
128	1N6030B	5	180	500m	1.0m	1.7k		200J	DO35
129	BZX55C180	5	180	500m	1.0m	1.2k	9.6	175J	DO35
130▼	SZP5-180-5-1								
		5.0	180	500m	1.0m			175	u5a
131▼	SZ.5-180-5-25								
		5.0	180	500m	25m			175	u5a
132	1N3431	10	180	.50	1.0m	2.0k	8.9	200A	P5
133	1N5279A	10	180	500m	680u	2.2k	11	200A	A398a
134	1N5895A	10	180	500m	680u	2.9k		150C	M859
135	1N6030A	10	180	500m	1.0m	2.3k		200J	DO35
136▼	SZP5-180-10-1								
		10	180	500m	1.0m			175	u5a
137▼	SZ.5-180-10-25								
		10	180	500m	25m			175	u5a
138	1N5279	20†	180	.50	.68m			200A	A398a
139	1N6030	20	180	500m	1.0m	2.3k		200J	DO35
140▼	SZP5-180-20-1								
		20	180	500m	1.0M			175	u5a
141▼	SZ.5-180-20-25								
		20	180	500m	25m			175	u5a
142	1N3709B	5	180	750m§	680u	2.2k		175S	A1az
143	1N3709A	10	180	750m§	680u	2.2k		175S	A1az
144	1N3709	20	180	750m§	680u	2.2k		175S	A1az
145	Z4A180	1†	180	1.0	2.5m	1.2k	11	200J	DO29
146	1EZ180D5	5	180	1.0	1.4m	1.5k	9.5	175J	A1ay
147	1M180Z,5	5†	180	1.0	1.4m	1.2k		175J	DO13Ø
148	1N1801A	5	180	1.0	5.0m	900		175S	DO13
149	1N3050B	5	180	1.0	1.4m	1.2k		175A	A31a
150	1N4192B	5	180	1.0 §	1.4m	1.2k		200S	DO29
151	1N4357B	5	180	1.0	1.4m	1.2k	9.5	300S	DO7
152	1N4434B	5	180	1.0	1.4m	1.1k	9.5	175A	A1cm
153	1N5593B	5	180	1.0 §	1.4m	1.2k		200A	A60ac
154	PL180Z	5	180	1.0	5.0m	350	9.5	150J	
155▼	SZ1-180-5-1								
		5.0	180	1.0	1.0m			175	u5b
156▼	SZ1-180-5-25								
		5.0	180	1.0	25m			175	u5b
157	TZB180B	5	180	1.0 §	1.0m		10	175A	A1ty
158	UZ8118	5	180	1.0	1.4m	1.3k	10	175	A380
159	VR180,A,B	5†	180	1.0	1.4m	1.2k		125A	A1b
160	Z4B180	5†	180	1.0	2.5m	1.2k	11	200J	DO29
161	ZB180	5†	180	1.0 §	1.4m	1.2k		150A	A1bc
162	ZB180B	5	180	1.0	1.4m	1.2k		100C	A1bc
163	1EZ180D10	10	180	1.0	1.4m	1.5k	9.5	175J	A1ay
164	1M180ZS10	10	180	1.0					DO41
165	1N1801	10	180	1.0	5.0m	900		175S	DO13
166	1N3050A	10	180	1.0	1.4m	1.2k		175A	A31a
167	1N3100A	10	180	1.0	3.0m	725		130C	A86c
168	1N4192A	10	180	1.0 §	1.4m	1.2k		200S	DO29
169	1N4357A	10	180	1.0	1.4m	1.2k	9.5	300S	DO7
170	1N4434A	10	180	1.0	1.4m	1.1k	9.5	175A	A1cm
171	1N5593A	10	180	1.0 §	1.4m	1.2k		200A	A60ac
172▼	SZ1-180-10-1								
		10	180	1.0	1.0m			175	u5b
173▼	SZ1-180-10-25								
		10	180	1.0	25m			175	u5b
174	TZB180A	10	180	1.0 §	1.0m		10	175A	A1ty
175	UZ8218	10	180	1.0	1.4m	1.3k	10	175	A380
176	Z180	10	180	1.0	1.4m	1.2k		200	DO41
177	ZB180A	10	180	1.0	1.4m	1.2k		100C	A1bc
178	1EZ180D	20	180	1.0	1.4m	1.5k	9.5	175J	A1ay
179	1N3050	20	180	1.0	1.4m	1.2k		175A	A31a
180	1N3100	20	180	1.0	3.0m	725		130C	A86c
181	1N4192	20	180	1.0 §	1.4m	1.2k		200S	DO29

SYMBOLS AND CODES EXPLAINED IN INTERPRETER

2. VOLTAGE REFERENCE DIODES - $V_Z \geq 100$ V (Cont'd)

IN ORDER OF: (1) REF. VOLTAGE (2) PD MAX (3) TOLERANCE & (4) TYPE NUMBER

LINE No.	4 TYPE No.	3 TOL ± (%)	1 NOM. REF. VOLT. (V)	2 PD @ 25°C MAX (W)	TEST CUR. Izt (A)	DYN. IMP. MAX (Ω)	TEMP. COEFF Tc MAX	TEMP MAX (°C)	DWG. NO.
1	1N4357	20	180	1.0	1.4m	1.2k	9.5	300S	DO7
2	1N4434	20	180	1.0	1.4m	1.1k		175S	A266a
3	1N5593	20	180	1.0 §	1.4			200A	A60ac
4▼	SZ1-180-20-1	20	180	1.0	1.0m			175	u5b
5▼	SZ1-180-20-25	20	180	1.0	25m			175	u5b
6	BZW22C180	5	180	1.3	5.0m	450		175S	DO41
7	BZX85C180	5	180	1.3	1.4m	1.2k	9.6	175J	DO41
8	BZY97C180	5	180	1.3	5.0m	350	13		A1rx
9	ZD180	5	180	1.3	5.0	350	10	150J	DO13
10	ZX180	5	180	1.3 §	5.0m	350	11	150J	S441
11	ZY180	5	180	1.3	5.0m	350	11	150J	A1bg
12	BZD10C180	7	180	1.3	5.0m	350	13		DO13
13	ZMU180	10	180	1.3	5.0m	380	13	200J	F149
14	ZPU180	11	180	1.3	5.0m	380	13	200J	DO41
15	1N5955D	1	180	1.5	2.1m	900		200J	DO41
16	1N5955C	2	180	1.5	2.1m	900		200J	DO41
17	1N3819B	5	180	1.5	2.1m	800	10	175S	C14Ø
18	1N4495	5	180	1.5	1.4m	1.3k		175A	A60y
19	1N5955B	5	180	1.5	2.1m	900		200J	DO41
20	1S4180,A	5†	180	1.5	2.0m	468	10	150A	DO1
21▼	SZ1.5-180-5-1	5.0	180	1.5	1.0m			175	u5b
22	ZGP10-180B	5	180	1.5	5m	1.3k		175A	DO41
23	1N3819A	10	180	1.5	2.1m	800	10	175S	C14Ø
24	1N5955A	10	180	1.5	2.1m	900		200J	DO41
25▼	SZ1.5-180-10-1	10	180	1.5	1.0m			175	u5b
26	ZGP10-180A	10	180	1.5	5m	1.3k		175A	DO41
27	1N3819	20	180	1.5	2.1m	800	10	175S	C14Ø
28	1N5955	20	180	1.5	2.1m	900		200J	DO41
29▼	SZ1.5-180-20-1	20	180	1.5	1.0m			175	u5b
30	ZGP10-180	20	180	1.5	5m	1.3k		175A	DO41
31	2EZ180D5	5	180	2.0	2.8m	725		200J	A1ay
32	2VR180,A,B	5†	180	2.0	2.8m	1.1k			A3e
33	BZV47C180	5	180	2.0	5.0m	350	9.5	175J	A344r
34	LMZ180A	5	180	2.0	3.0m	725	10	150A	DO41
35	ZBC180	5†	180	2.0 §	2.8m	850		150A	A1bc
36	ZBC180B	5	180	2.0	2.8m	850			A1ty
37	2EZ180D10	10	180	2.0	2.8m	725		200J	A1ay
38	LMZ180	10	180	2.0	3.0m	725	10	150A	DO41
39	ZBC180A	10	180	2.0	2.8m	850			A1ty
40	2EZ180D	20	180	2.0	2.8m	725		200J	A1ay
41	Z7A180	1†	180	2.5	100m	60	11	200J	S457Ø
42	Z2B180	5†	180	2.5	5.0m	1.0k	11	200J	DO1
43	3EZ180D1	1.0	180	3.0	4.2m	700		150J	A1ay
44	3EZ180D2	2.0	180	3.0	4.2m	700		150J	A1ay
45	3EZ180D3	3.0	180	3.0	4.2m	700		150J	A1ay
46	3EZ180D4	4.0	180	3.0	4.2m	700		150J	A1ay
47	1N5102	5	180	3.0	4.0m	850		175A	A146u
48	3EZ180D5	5	180	3.0	4.2m	700		200J	A1ay
49	3VR180,A,B	5†	180	3.0	4.1m	600			A3al
50	MZ118	5	180	3.0	4.0m	850	10	175A	A146j
51	UZ118	5	180	3.0	4.0m	850	10	175A	A380
52	ZCC180	5†	180	3.0 §	4.0m	850		150A	A1ey
53	ZCC180B	5	180	3.0	4.0m	850			A1ey
54	3EZ180D10	10	180	3.0	4.2m	700		200J	A1ay
55	3KZ200	10†	180	3.0 §	5.0m		.11		A3ak§
56	MZ218	10	180	3.0	4.0	850	10	175A	A146j
57	UZ218	10	180	3.0	4.0m	850	10	175A	A380
58	ZCC180A	10	180	3.0	4.0m	850			A1ey
59	3EZ180D	20	180	3.0	4.2m	700		200J	A1ay
60	MZ318	20	180	3.0	4.0m	850	10	175A	A146j
61	UZ318	20	180	3.0	4.0m	850	10	175A	A380
62▼	BZT03/D180	10	180	3.2	5.0m	400	13	175J	A94g
63	3T180,A,B	5†	180	3.5	5.0m	900			S11
64▼	SZ3-180-5-1	5.0	180	5.0	1.0m			175	u5c
65▼	SZ3-180-5-25	5.0	180	5.0	25m			175	u5c
66▼	SZ3-180-10-1	10	180	5.0	1.0m			175	u5c
67▼	SZ3-180-10-25	10	180	5.0	25m			175	u5c
68▼	SZ3-180-20-1	20	180	5.0	1.0m			175	u5c
69▼	SZ3-180-20-25	20	180	5.0	25m			175	u5c
70	CD5387B	5	190		5.0m	450	10	200J	u39b
71	CD5280B	5	190	400m	660u	2.4k	11	200J	u39a
72	CH5280	5	190	400m	660u	2.4k	11	200J	u10
73	RD190EB	5.0	190	400m	1.0m	2.4k		175J	DO35
74	1N5280B	5	190	500m	660u	2.4k	11	200A	A398a
75▼	SZP5-190-5-1	5.0	190	500m	1.0m			175	u5a
76	1N5280A	10	190	500m	660u	2.4k	11	200A	A398a
77	1N5896A	10	190	500m	660u	3.2k		150C	M859
78▼	SZP5-190-10-1	10	190	500m	1.0m			175	u5a
79	1N5280	20†	190	.50	.66m			200A	A398a
80▼	SZP5-190-20-1	20	190	500m	1.0M			175	u5a
81	Z190	20	190	500m	5.0m	2.5k		175A	DO41
82	1EZ190D5	5	190	1.0	1.3m	1.7k	9.5	150J	A1ay
83	UZ8119	5	190	1.0	1.3m	1.4k	10	175	A380
84	1EZ190D10	10	190	1.0	1.3m	1.7k	9.5	150J	A1ay
85▼	SZ1-190-10-1	10	190	1.0	1.0m			175	u5b
86	UZ8219	10	190	1.0	1.3m	1.4k	10	175	A380
87	1EZ190D	20	190	1.0	1.3m	1.7k	9.5	150J	A1ay
88▼	SZ1-190-20-1	20	190	1.0	1.0m			175	u5b
89▼	SZ1.5-190-20-1		190	1.5	1.0m			175	u5b
90▼	SZ1.5-190-5-1	5.0	190	1.5	1.0m			175	u5b
91	ZGP10-190B	5	190	1.5	5m	1.5		175A	DO41
92▼	SZ1.5-190-10-1	10	190	1.5	1.0m			175	u5b
93	ZGP10-190A	10	190	1.5	5m	1.5		175A	DO41
94	ZGP10-190	20	190	1.5	5m	1.4k		175A	DO41
95	2EZ190D5	5	190	2.0	2.6m	825		200J	A1ay
96	2EZ190D10	10	190	2.0	2.6m	825		200J	A1ay
97	2EZ190D	20	190	2.0	2.6m	825		200J	A1ay
98	3EZ190D1	1.0	190	3.0	4.0m	800		150J	A1ay
99	3EZ190D2	2.0	190	3.0	4.0m	800		150J	A1ay
100	3EZ190D3	3.0	190	3.0	4.0m	800		150J	A1ay
101	3EZ190D4	4.0	190	3.0	4.0m	800		150J	A1ay
102	1N5103	5	190	3.0	4.0m	900		175A	A146u
103	3EZ190D5	5	190	3.0	4.0m	800		200J	A1ay
104	MZ119	5	190	3.0	4.0m	900	10	175A	A146j
105	UZ119	5	190	3.0	4.0m	900	10	175A	A380
106	3EZ190D10	10	190	3.0	4.0m	800		200J	A1ay
107	MZ219	10	190	3.0	4.0m	900	10	175A	A146j
108	UZ219	10	190	3.0	4.0m	900	10	175A	A380
109	3EZ190D	20	190	3.0	4.0m	800		200J	A1ay
110	MZ319	20	190	3.0	4.0m	900	10	175A	A146j
111	UZ319	20	190	3.0	4.0m	900	10	175A	A380
112▼	SZ3-190-5-1	5.0	190	5.0	1.0m			175	u5c
113▼	SZ3-190-10-1	10	190	5.0	1.0m			175	u5c
114▼	SZ3-190-20-1	20	190	5.0	1.0m			175	u5c

$V_Z \geq 200$ V

LINE No.	4 TYPE No.	3 TOL ± (%)	1 NOM. REF. VOLT. (V)	2 PD @ 25°C MAX (W)	TEST CUR. Izt (A)	DYN. IMP. MAX (Ω)	TEMP. COEFF Tc MAX	TEMP MAX (°C)	DWG. NO.
118	1C3015		200		12m	300			u36
119	CD5388B	5	200		5.0m	480	10	200J	u39b
120	BZX61C200	6	200		2.0m	1.2k	15		
121	1N745A	5	200	250m	1.0m	1.4k	9.6	175A	DO7
122	1N745	10	200	250m	1.0m	1.4k	9.6	175A	DO7
123	1N745B	20	200	.25	1.0m	1.4k			DO7
124	1N992B	5	200	400m	650u	2.5k		175S	A398a
125	CD992B	5	200	400m	650u	2.5k	11	200J	u39a
126	CD5281B	5	200	400m	650u	2.5k	11	200J	u39a
127	CH992	5	200	400m	650u	2.5k	11	200J	u10
128	CH5281	5	200	400m	650u	2.5k	11	200J	u10
129	RD200EB	5.0	200	400m	1.0m	2.5k		175J	DO35
130	1N992A	10	200	400m	650u	2.5k		175S	A398a
131	1N992	20	200	400m	650u	2.5k		175S	A398a
132	1N5281B	5	200	500m	650u	2.5k	11	200A	A398a
133	1N6031B	5	200	500m	1.0m	2.0k		200J	DO35
134	BZX55C200	5	200	500m	1.0m	1.4k	9.6	175J	DO35
135▼	SZP5-200-5-1	5.0	200	500m	1.0m			175	u5a
136▼	SZ.5-200-5-25	5.0	200	500m	25m			175	u5a
137	1N5281A	10	200	500m	650u	2.5k	11	200A	A398a
138	1N5897A	10	200	500m	650u	3.5k		150C	M859
139	1N6031A	10	200	500m	1.0m	2.7k		200J	DO35
140▼	SZP5-200-10-1	10	200	500m	1.0m			175	u5a
141▼	SZ.5-200-10-25	10	200	500m	25m			175	u5a
142	1N5281	20†	200	.50	.65m			200A	A398a
143	1N6031	20	200	500m	1.0m	2.7k		200J	DO35
144▼	SZP5-200-20-1	20	200	500m	1.0M			175	u5a
145▼	SZ.5-200-20-25	20	200	500m	25m			175	u5a
146	1N3710B	5	200	750m§	650u	2.5k		175S	A1az
147	1N3710A	10	200	750m§	650u	2.5k		175S	A1az
148	1N3710	20	200	750m§	650u	2.5k		175S	A1az
149	Z4A200	1†	200	1.0	2.5m	1.4k	11	200J	DO29
150	1EZ200D5	5	200	1.0	1.2m	1.9k	10	175J	A1ay
151	1M200Z,5	5†	200	1.0	1.2m	1.5k		175J	DO13Ø
152	1N1802A	5	200	1.0	5.0m	1.1k		175A	DO13Ø
153	1N3051B	5	200	1.0	1.2m	1.5k		175A	A31a
154	1N4193B	5	200	1.0 §	1.2m	1.5k		200S	DO29
155	1N4358B	5	200	1.0	1.2m	1.5k	9.5	300S	DO7
156	1N4435B	5	200	1.0	1.2m	1.4k	10	175A	A1cm
157	1N5594B	5	200	1.0 §	1.2m	1.5k		200A	A60ac
158	PL200Z	5	200	1.0	5.0m	350	10	150J	
159▼	SZ1-200-5-1	5.0	200	1.0	1.0m			175	u5b
160▼	SZ1-200-5-25	5.0	200	1.0	25m			175	u5b
161	TZB200B	5	200	1.0 §	1.0m		10	175A	A1ty
162	UZ8120	5	200	1.0	1.2m	1.5k	10	175	A380
163	VR200,A,B	5†	200	1.0	1.2m	1.5k		125A	A1b
164	Z4B200	5†	200	1.0	2.5m	1.4k	11	200J	DO29
165	ZB200	5†	200	1.0 §	1.2m	1.5k		150A	A1bc
166	ZB200B	5	200	1.0	1.2m	1.5k		100C	A1bc
167	1EZ200D10	10	200	1.0	1.2m	1.9k	10	175J	A1ay
168	1N1802	10	200	1.0	5.0m	1.1k		175A	DO13Ø
169	1N3051A	10	200	1.0	1.2m	1.5k		175A	A31a
170	1N4193A	10	200	1.0 §	1.2m	1.5k		200S	DO29
171	1N4358A	10	200	1.0	1.2m	1.5k	9.5	300S	DO7
172	1N4435A	10	200	1.0	1.2m	1.4k	10	175A	A1cm
173	1N5594A	10	200	1.0 §	1.2m	1.5k		200A	A60ac
174▼	SZ1-200-10-1	10	200	1.0	1.0m			175	u5b
175▼	SZ1-200-10-25	10	200	1.0	25m			175	u5b
176	TZB200A	10	200	1.0 §	1.0m		10	175A	A1ty
177	UZ8220	10	200	1.0	1.2m	1.5k	10	175	A380
178	Z200	10	200	1.0	1.2m	1.5k		200	DO41
179	ZB200A	10	200	1.0	1.2m	1.5k		100C	A1bc
180	1EZ200D	20	200	1.0	1.2m	1.9k	10	175J	A1ay
181	1N3051	20	200	1.0	1.2m	1.5k		175A	A31a
182	1N4193	20	200	1.0 §	1.2m	1.5k		200S	DO29
183	1N4358	20	200	1.0	1.2m	1.5k	9.5	300S	DO7
184	1N4435	20	200	1.0	1.2m	1.4k		175S	A266a
185	1N5594	20	200	1.0 §	1.2			200A	A60ac
186▼	SZ1-200-20-1	20	200	1.0	1.0m			175	u5b

SYMBOLS AND CODES EXPLAINED IN INTERPRETER

2. VOLTAGE REFERENCE DIODES - $V_Z \geq 200$ V (Cont'd)

IN ORDER OF: (1) REF. VOLTAGE (2) PD MAX (3) TOLERANCE & (4) TYPE NUMBER

LINE No.	4 TYPE No.	3 TOL ± (%)	1 NOM. REF. VOLT. (V)	2 PD @ 25°C MAX (W)	TEST CUR. Izt (A)	DYN. IMP. MAX (Ω)	TEMP. COEFF Tc MAX	TEMP MAX (°C)	DWG. NO.
1▼	SZ1-200-20-25								
		20	200	1.0	25m			175	u5b
2	BZW22C200	5	200	1.3	5.0m	450		175S	DO41
3	BZX85C200	5	200	1.3	1.2m	1.8k	9.6	175J	DO41
4	BZY97C200	5	200	1.3	5.0m	350	13		A1rx
5	ZD200	5	200	1.3	5.0	350	10	150J	DO13
6	ZY200	5	200	1.3	5.0m	350	11	150J	A1bg
7	BZD10C200	6	200	1.3	5.0m	350	13		DO13
8▼	SZ1.5-200-20-1								
			200	1.5	1.0m			175	u5b
9	1N5956D	1	200	1.5	1.9m	1.2k		200J	DO41
10	1N5956C	2	200	1.5	1.9m	1.2k		200J	DO41
11	1N3820B	5	200	1.5	1.9m	1.0k	10	175S	C14Ø
12	1N4496	5	200	1.5	1.2m	1.5k		175A	A60y
13	1N5956B	5	200	1.5	1.9m	1.2k		200J	DO41
14	1S4200,A	5†	200	1.5	2.0m	560	10	150A	DO1
15▼	SZ1.5-200-5-1								
		5.0	200	1.5	1.0m			175	u5b
16	ZGP10-200B	5	200	1.5	5m	1.5k		175A	DO41
17	1N3820A	10	200	1.5	1.9m	1.0k	10	175S	C14Ø
18	1N5956A	10	200	1.5	1.9m	1.2k		200J	DO41
19▼	SZ1.5-200-10-1								
		10	200	1.5	1.0m			175	u5b
20	ZGP10-200A	10	200	1.5	5m	1.5k		175A	DO41
21	1N3820	20	200	1.5	1.9m	1.0k	10	175S	C14Ø
22	1N5956	20	200	1.5	1.9m	1.2k		200J	DO41
23	ZGP10-200	20	200	1.5	5m	1.5k		175A	DO41
24	2EZ200D5	5	200	2.0	2.5m	900		200J	A1ay
25	2VR200,A,B	5†	200	2.0	2.5m	1.2k			A3e
26	BZV47C200	5	200	2.0	5.0m	350	10	175J	A344r
27	LMZ200A	5	200	2.0	2.5m	900	10	150A	DO41
28	ZBC200	5†	200	2.0 §	2.5m	950		150A	A1bc
29	ZBC200B	5	200	2.0	2.5m	950			A1ty
30	2EZ200D10	10	200	2.0	2.5m	900		200J	A1ay
31	LMZ200	10	200	2.0	2.5m	900	10	150A	DO41
32	ZBC200A	10	200	2.0	2.5m	950			A1ty
33	2EZ200D	20	200	2.0	2.5m	900		200J	A1ay
34	Z7A200	1†	200	2.5	100m	70	11	200J	S457Ø
35	1N4085	5	200	2.5	2.5m	1.3k	.50	100	A1su
36	1N4085A	5	200	2.5	2.5m	1.3k	.20	100	A1su
37	Z2B200	5†	200	2.5	5.0m	1.2k	11	200J	DO1
38	3EZ200D1	1.0	200	3.0	3.7m	875		150J	A1ay
39	3EZ200D2	2.0	200	3.0	3.7m	875		150J	A1ay
40	3EZ200D3	3.0	200	3.0	3.7m	875		150J	A1ay
41	3EZ200D4	4.0	200	3.0	3.7m	875		150J	A1ay
42	1N5104	5	200	3.0	4.0m	950		175A	A146u
43	3EZ200D5	5	200	3.0	3.7m	875		200J	A1ay
44	3VR200,A,B	5†	200	3.0	3.7m	750			A3al
45	MZ120	5	200	3.0	4.0m	950	10	175A	A146j
46	UZ120	5	200	3.0	4.0m	950	10	175A	A380
47	ZCC200	5†	200	3.0 §	4.0m	950		150A	A1ey
48	ZCC200B	5	200	3.0	4.0m	950			A1ey
49	1N4504	10	200	3.0	4.0m	1.0k		175S	A146f
50	3EZ200D10	10	200	3.0	3.7m	875		200J	A1ay
51	MZ220	10	200	3.0	4.0	950	10	175A	A146j
52	UZ220	10	200	3.0	4.0m	950	10	175A	A380
53	ZCC200A	10	200	3.0	4.0m	950			A1ey
54	3EZ200D	20	200	3.0	3.7m	875		200J	A1ay
55	MZ320	20	200	3.0	4.0m	950	10	175A	A146j
56	UZ320	20	200	3.0	4.0m	950	10	175A	A380
57▼	BZT03/D200	10	200	3.2	5.0m	500	13	175J	A94g
58	3T200,A,B	5†	200	3.5	5.0m	1.1k			S11
59▼	SZ3-200-5-1								
		5.0	200	5.0	1.0m			175	u5c
60▼	SZ3-200-5-25								
		5.0	200	5.0	25m			175	u5c
61▼	SZ3-200-10-1								
		10	200	5.0	1.0m			175	u5c
62▼	SZ3-200-10-25								
		10	200	5.0	25m			175	u5c
63▼	SZ3-200-20-1								
		20	200	5.0	1.0m			175	u5c
64▼	SZ3-200-20-25								
		20	200	5.8	25m			175	u5c
65	1N1948B	1	220	200m	100u			150	DO7
66	1N2002B	1	220	200m	100u			150	C1
67	1N1948A	5	220	200m	100u			150	DO7
68	1N2002A	5	220	200m	100u			150	C1
69	1N1948	10	220	200m	100u			150	DO7
70	1N2002	10	220	200m	100u			150	C1
71	1N3432	10	220	500m	1.0m	2.2k	9.1	200S	P5
72	TZB220B	5	220	1.0 §	1.0m		11	175A	A1ty
73	TZB220A	10	220	1.0 §	1.0m		11	175A	A1ty
74	1N5105	5	220	3.0	3.0m	1.1k		175A	A146u
75	MZ122	5	220	3.0	3.0m	1.1k	10	175A	A146j
76	UZ122	5	220	3.0	3.0m	1.1k	10	175A	A380
77	MZ222	10	220	3.0	3.0m	1.1k	10	175A	A146j
78	UDZ222	10	220	3.0	3.0m	325		175A	A356a
79	UZ222	10	220	3.0	3.0m	1.1k	10	175A	A380
80	MZ322	20	220	3.0	3.0m	1.1k	10	175A	A146j
81	UZ322	20	220	3.0	3.0m	1.1k	10	175A	A380
82▼	BZT03/D220	10	220	3.2	2.0m	750	13	175J	A94g
83	1N5106	5	240	3.0	3.0m	1.3k		175A	A146u
84	MZ124	5	240	3.0	3.0m	1.3k	11	175A	A146j
85	UZ124	5	240	3.0	3.0m	1.3k	10	175A	A380
86	MZ224	10	240	3.0	3.0m	1.3k	11	175A	A146j
87	UZ224	10	240	3.0	3.0m	1.3k	10	175A	A380
88	MZ324	20	240	3.0	3.0m	1.3k	11	175A	A146j
89	UZ324	20	240	3.0	3.0m	1.3k	10	175A	A380
90▼	BZT03/D240	10	240	3.2	2.0m	850	13	175J	A94g
91	TZB250B	5	250	1.0 §	1.0m		11	175A	A1ty
92	TZB250A	10	250	1.0 §	1.0m		11	175A	A1ty
93	1N5107	5	260	3.0	3.0m	1.5k		175A	A146u
94	MZ126	5	260	3.0	3.0m	1.5k	11	175A	A146j
95	UZ126	5	260	3.0	3.0m	1.5k	10	175A	A380
96	MZ226	10	260	3.0	3.0m	1.5k	11	175A	A146j
97	UZ226	10	260	3.0	3.0m	1.5k	10	175A	A380
98	MZ326	20	260	3.0	3.0m	1.5k	11	175A	A146j
99	UZ326	20	260	3.0	3.0m	1.5k	10	175A	A380
100	AP26.0A,B	5†	269	1.0 †	5.0m	50			DO35
101	1N2003B	1	270	150m	100u			150	C1
102	1N2003A	5	270	150m	100u			150	C1
103	1N2003	10	270	150m	100u			150	C1
104	1N1949B	1	270	200m	100u			150	DO7
105	1N1949A	5	270	200m	100u			150	DO7
106	1N1949	10	270	200m	100u			150	DO7
107	1N5108	5	270	3.0	3.0m	1.6k		175A	A146u
108	MZ127	5	270	3.0	3.0m	1.6k	11	175A	A146j
109	MZ227	10	270	3.0	3.0m	1.6k	11	175A	A146j
110	MZ327	20	270	3.0	3.0m	1.6k	11	175A	A146j
111▼	BZT03/D270	10	270	3.2	2.0m	1.0k	13	175J	A94g
112	1N5109	5	280	3.0	3.0m	1.7k		175A	A146u
113	MZ128	5	280	3.0	3.0m	1.7k	11	175A	A146j
114	UZ128	5	280	3.0	3.0m	1.7k	10	175A	A380
115	MZ228	10	280	3.0	3.0m	1.7k	11	175A	A146j
116	UZ228	10	280	3.0	3.0m	1.7k	10	175A	A380
117	MZ328	20	280	3.0	3.0m	1.7k	11	175A	A146j
118	UZ328	20	280	3.0	3.0m	1.7k	10	175A	A380
119	Z300		300		5.0m	5.0k		175A	DO41
120	TZB300B	5	300	1.0 §	1.0m		11	175A	A1ty
121	TZB300A	10	300	1.0 §	1.0m		11	175A	A1ty
122	1N5110	5	300	3.0	3.0m	1.9k		175A	A146u
123	MZ130	5	300	3.0	3.0m	1.9k	11	175A	A146j
124	UDZ130	5	300	3.0	3.0m	1.9k		175A	A356a
125	UZ130	5	300	3.0	3.0m	1.9k	10	175A	A380
126	MZ230	10	300	3.0	3.0m	1.9k	11	175A	A146j
127	UDZ230	10	300	3.0	3.0m	1.9k		175A	A356a
128	UZ230	10	300	3.0	3.0m	1.9k	10	175A	A380
129	MZ330	20	300	3.0	3.0m	1.9k	11	175A	A146j
130	UZ330	20	300	3.0	3.0m	1.9k	10	175A	A380
131	1N5111	5	320	3.0	2.0m	2.1k		175A	A146u
132	MZ132	5	320	3.0	2.0m	2.1k	11	175A	A146j
133	UZ132	5	320	3.0	2.0m	2.1k	10	175A	A380
134	MZ232	10	320	3.0	2.0m	2.1k	11	175A	A146j
135	UZ232	10	320	3.0	2.0m	2.1k	10	175A	A380
136	MZ332	20	320	3.0	2.0m	2.1k	11	175A	A146j
137	UZ332	20	320	3.0	2.0m	2.1k	10	175A	A380
138	1N2004B	1	330	150m	100u			150	C1
139	1N2004A	5	330	150m	100u			150	C1
140	1N2004	10	330	150m	100u			150	C1
141	1N1950B	1	330	200m	100u			150	DO7
142	1N1950A	5	330	200m	100u			150	DO7
143	1N1950	10	330	200m	100u			150	DO7
144	Z330	20	330	500m	5.0m	5.0k		175A	DO41
145	1N5112	5	330	3.0	2.0m	2.2k		175A	A146u
146	MZ133	5	330	3.0	2.0m	2.2k	11	175A	A146j
147	MZ233	10	330	3.0	2.0m	2.2k	11	175A	A146j
148	MZ333	20	330	3.0	2.0m	2.2k	11	175A	A146j
149	1N5113	5	340	3.0	2.0m	2.4k		175A	A146u
150	MZ134	5	340	3.0	2.0m	2.4k	11	175A	A146j
151	UZ134	5	340	3.0	2.0m	2.4k	11	175A	A380
152	MZ234	10	340	3.0	2.0m	2.4k	11	175A	A146j
153	UZ234	10	340	3.0	2.0m	2.4k	11	175A	A380
154	MZ334	20	340	3.0	2.0m	2.4k	11	175A	A146j
155	UZ334	20	340	3.0	2.0m	2.4k	11	175A	A380
156	TZB350B	5	350	1.0 §	1.0m		11	175A	A1ty
157	TZB350A	10	350	1.0 §	1.0m		11	175A	A1ty
158	1N5114	5	360	3.0	2.0m	2.7k		175A	A146u
159	MZ136	5	360	3.0	2.0m	2.7k	11	175A	A146j
160	UZ136	5	360	3.0	2.0m	2.7k	11	175A	A380
161	MZ236	10	360	3.0	2.0m	2.7k	11	175A	A146j
162	UZ236	10	360	3.0	2.0m	2.7k	11	175A	A380
163	MZ336	20	360	3.0	2.0m	2.7k	11	175A	A146j
164	UZ336	20	360	3.0	2.0m	2.7k	11	175A	A380
165	1N5115	5	380	3.0	2.0m	3.0k		175A	A146u
166	MZ138	5	380	3.0	2.0m	3.0k	11	175A	A146j
167	UZ138	5	380	3.0	2.0m	3.0k	11	175A	A380
168	MZ238	10	380	3.0	2.0m	3.0k	11	175A	A146j
169	UZ238	10	380	3.0	2.0m	3.0k	11	175A	A380
170	MZ338	20	380	3.0	2.0m	3.0k	11	175A	A146j
171	UZ338	20	380	3.0	2.0m	3.0k	11	175A	A380
172	1N2005B	1	390	150m	100u			150	C1
173	1N2005A	5	390	150m	100u			150	C1
174	1N2005	10	390	150m	100u			150	C1
175	1N5116	5	390	3.0	2.0m	3.2k		175A	A146u
176	MZ139	5	390	3.0	2.0m	3.2k	11	175A	A146j
177	MZ239	10	390	3.0	2.0m	3.2k	11	175A	A146j
178	MZ339	20	390	3.0	2.0m	3.2k	11	175A	A146j
179	1N1951B	1	395	200m	100u			150	DO7
180	1N1951A	5	395	200m	100u			150	DO7
181	1N1951	10	395	200m	100u			150	DO7
182	MC4B1,C1	5,1	400		.10m				A2t
183	MC4B2,C2	5,1	400		.10m				A1cy
184	TZB400B	5	400	1.0 §	1.0m		11	175A	A1ty
185	TZB400A	10	400	1.0 §	1.0m		11	175A	A1ty
186	Z7A400	1†	400	2.5	50m	200	11	200J	S457Ø
187	Z2B400	5†	400	2.5	1.0m	3.0k	11	200J	DO1
188	1N5117	5	400	3.0	2.0m	3.5k		175A	A146u
189	MZ140	5	400	3.0	2.0m	3.5k	11	175A	A146j
190	UZ140	5	400	3.0	2.0m	3.5k	11	175A	A380
191	MZ240	10	400	3.0	2.0m	3.5k	11	175A	A146j
192	UZ240	10	400	3.0	2.0m	3.5k	11	175A	A380
193	MZ340	20	400	3.0	2.0m	3.5k	11	175A	A146j
194♦	UZ340	20	400	3.0	2.0m	3.5k	11	175A	A380
195	1N2006B	1	470	150m	100u			150	C1
196	1N2006A	5	470	150m	100u			150	C1
197	1N2006	10	470	150m	100u			150	C1
198	1N1952B	1	470	200m	100u			150	DO7
199	1N1952A	5	470	200m	100u			150	DO7
200	1N1952	10	470	200m	100u			150	DO7
201♦	R5000510XXWC								
			500						
202	MC5B3	5.0	500		100m				A60f
203	MC5C3	10.	500		100m				A60f
204	MC5B1,C1	5,1	500		.10m				A2t
205	MC5B2,C2	5,1	500		.10m				A1cy
206	1N2007B	1	560	150m	100u			150	C1
207	1N2007A	5	560	150m	100u			150	C1
208	1N2007	10	560	150m	100u			150	C1
209	1N1953B	1	565	200m	100u			150	DO7

SYMBOLS AND CODES EXPLAINED IN INTERPRETER

2. VOLTAGE REFERENCE DIODES - $V_Z \geq 200$ V (Cont'd)

IN ORDER OF: (1) REF. VOLTAGE (2) PD MAX (3) TOLERANCE & (4) TYPE NUMBER

LINE No.	4 TYPE No.	3 TOL ± (%)	1 NOM. REF. VOLT. (V)	2 PD @ 25°C MAX (W)	TEST CUR. Izt (A)	DYN. IMP. MAX (Ω)	TEMP. COEFF Tc MAX	TEMP MAX (°C)	DWG. NO.
1	1N1953A	5	565	200m	100u			150	DO7
2	1N1953	10	565	200m	100u			150	DO7
3	MC6A1,B1,C1	2†	600		100u				A2t
4	MC6A2,B2,C2	2†	600		100u				A1cy
5	MC6A3	2.0	600		100m				A60f
6	MC6B3	5.0	600		100m				A60f
7	MC6C3	10.	600		100m				A60f
8	MC7A1,B1,C1	2†	700		100u				A2t
9	MC7A2,B2,C2	2†	700		100u				A1cy
10	MC7A3	2.0	700		100u				A60f
11	MC7B3	5.0	700		100u				A60f
12	MC7C3	10.	700		100u				A60f
13	MC8A1,B1	2†	800		.10m				A2t
14	MC8A2,B2	2†	800		100u				A1cy
15	MC8A3	2.0	800		50u				A60f
16	MC8B3	5.0	800		50u				A60f
17	MC9A1,B1	2†	900		.10m				A2t
18	MC9A2,B2	2†	900		.10m				A1cy
19	MC9A3	2.0	900		50u				A60f
20	MC9B3	5.0	900		50u				A60f
$V_Z \geq 1k$ V									
24	MC10A1,B1	2†	1000		.10m				A2t
25	MC10A2,B2	2†	1000		.10m				A1cy
26	MC10A3	2.0	1.0k		50u				A60f
27	MC10B3	5.0	1.0k		50u				A60f
28	BZY97C100V	5†	1.0k	1.5	5.0m	200	110mV	150J	A1bg
29	MC11A1,B1	2†	1100		.10m				A2t
30	MC11A2,B2	2†	1100		.10m				A1cy
31	MC11A3	2.0	1.1k		25u				A60f
32	MC11B3	5.0	1.1k		25u				A60f
33	BZY97C110V	5†	1.1k	1.5	5.0m	250	121mV	150J	A1bg
34	MC12A1,B1	2†	1200		.10m				A2t
35	MC12A2,B2	2†	1200		.10m				A1cy
36	MC12A3	2.0	1.2k		25u				A60f
37	MC12B3	5.0	1.2k		25u				A60f
38	BZY97C120V	5†	1.2k	1.5	5.0m	250	132mV	150J	A1bg
39	MC13A1,B1	2†	1300		.10m				A2t
40	MC13A2,B2	2†	1300		.10m				A1cy
41	BZY97C130V	5†	1.3k	1.5	5.0m	300	143mV	150J	A1bg
42	MC14A1,B1	2†	1400		.10m				A2t
43	MC14A2,B2	2†	1.4k		100u				A1cy
44	MC15A1,B1	2†	1500		.10m				A2t
45	MC15A2,B2	2†	1500		.10m				A1cy
46	BZY97C150V	5†	1.5k	1.5	5.0m	300	165mV	150J	A1bg
47	BZY97C160V	5†	1.6k	1.5	5.0m	350	176mV	150J	A1bg
48	BZY97C180V	5†	1.8k	1.5	5.0m	350	198mV	150J	A1bg
49	BZY97C200V	5†	2.0k	1.5	5.0m	350	220mV	150J	A1bg
DOUBLE-ANODE REFERENCE DIODE									
53	SV1Ø	3.3†	.60	.75	1.0m	40	.38	150A	A1fg
54	C4C3.0Ø	10†	3.0	1.0	100m	4.0	8.0	200J	DO29
55	C2C3.0Ø	10†	3.0	2.5	100m	4.0	8.0	200J	DO1
56	C4C3.3Ø	10†	3.3	1.0	100m	4.0	7.0	200J	DO29
57	C2C3.3Ø	10†	3.3	2.5	100m	4.0	7.0	200J	DO1
58	1N4535Ø	5	3.45	.50	5.0m	65 †		75R	DO7
59	1N471BØ	5	3.5	200m	5.0m	65 †		200A	C1
60	1N471Ø	10	3.5	200m	5.0m	65 †		200A	C1
61	C4C3.6Ø	10†	3.6	1.0	100m	4.0	6.0	200J	DO29
62	C2C3.6Ø	10†	3.6	2.5	100m	4.0	6.0	200J	DO1
63	IDAZ3397,A,B,CØ	5†	3.9	500m	30m	20	9.0	200A	A1hc
64	C4C3.9Ø	10†	3.9	1.0	100m	4.0	5.0	200J	DO29
65	C2C3.9Ø	10†	3.9	2.5	100m	4.0	5.0	200J	DO1
66	1N472BØ	1	4.1	200m	5.0m	60 †		200A	C1
67	IDAZ472,A,B,CØ	5†	4.1	200m	5.0m	60 †		200A	A1hc
68	1N472Ø	10	4.1	200m	5.0m	60 †		200A	C1
69	C4C4.3Ø	10†	4.3	1.0	100m	4.0	4.0	200J	DO29
70	C2C4.3Ø	10†	4.3	2.5	100m	4.0	4.0	200J	DO1
71	IDAZ3398,A,B,CØ	5†	4.7	500m	30m	20	8.0	200A	A1hc
72	C4C4.7Ø	10†	4.7	1.0	100m	4.0	1.0	200J	DO29
73	C2C4.7Ø	10†	4.7	2.5	100m	4.0	1.0	200J	DO1
74	1N473BØ	1	4.9	200m	5.0m	50 †		200A	C1
75	IDAZ473,A,B,CØ	5†	4.9	200m	5.0m	50 †		200A	A1hc
76	1N473Ø	10	4.9	200m	5.0m	50 †		200A	C1
77	IDAZ3399,A,B,CØ	5†	5.0	500m	20m	20	7.0	200A	A1hc
78	IDA1Z5,A,B,CØ	5†	5.0	1.0	25m			200A	A1ht
79	C4C5.1Ø	10†	5.1	1.0	100m	4.0	1.0	200J	DO29
80	C2C5.1Ø	10†	5.1	2.5	100m	4.0	1.0	200J	DO1
81	C4C5.6Ø	10†	5.6	1.0	50m	3.0	2.0	200J	DO29
82	C2C5.6Ø	10†	5.6	2.5	50m	3.0	2.0	200J	DO1
83	1N474BØ	1	5.8	200m	5.0m	40 †		200A	C1
84	IDAZ474,A,B,CØ	5†	5.8	200m	5.0m	40 †		200A	A1hc
85	1N474Ø	10	5.8	200m	5.0m	40 †		200A	C1
86	1N822Ø	5	6.2	.25	7.5m	15	1	125A	DO7
87	1N822AØ	5	6.2	.25	7.5m	15	1.0	175	DO7
88	1N824Ø	5	6.2	.25	7.5m	15	.5	125A	DO7
89	1N824AØ	5	6.2	.25	7.5m	15	.50	175	DO7
90	IDAZ824,A,B,CØ	5†	6.2	250m	7.5m	15	500m	175	A1hc
91	C4C6.2Ø	10†	6.2	1.0	50m	2.0	3.0	200J	DO29
92	C2C6.2Ø	10†	6.2	2.5	50m	2.0	3.0	200J	DO1
93	IDAZ3400,A,B,CØ	5†	6.8	500m	20m	20	5.0	200A	A1hc
94	IDA1Z6.8,A,B,CØ	5†	6.8	1.0	25m			200A	A1ht
95	C4C6.8Ø	10†	6.8	1.0	50m	1.0	4.0	200J	DO29
96	C2C6.8Ø	10†	6.8	2.5	50m	2.0	4.0	200J	DO1
97	1N475BØ	1	7.1	200m	5.0m	25 †		200A	C1
98	IDAZ475,A,B,CØ	5†	7.1	200m	5.0m	25		200A	A1hc
99	1N475Ø	10	7.1	200m	5.0m	25 †		200A	C1
100	UDZ8707Ø	5	7.5	1.0	34m	6.0		175A	A356a
101	C4C7.5Ø	10†	7.5	1.0	50m	1.0	5.0	200J	DO29
102	UDZ8807Ø	10	7.5	1.0	34m	6.0		175A	A356a
103	C2C7.5Ø	10†	7.5	2.5	50m	2.0	5.0	200J	DO1
104	UDZ807Ø	10	7.5	3.0	75m	3.0		175A	A356a
105	IDAZ3181,A,B,CØ	5†	7.7	600m	14m	10	4.9	175	A1hc
106	1N3181Ø	10	7.7	.60	14m	10	4.9	100	C42u
107	IDAZ3401,A,B,CØ	5†	8.2	500m	10m	15	2.0	200A	A1hc
108	IDA1Z8.2,A,B,CØ	5†	8.2	1.0	25m			200A	A1ht
109	UDZ8708Ø	5	8.2	1.0	31m	7.0		175A	A356a
110	C4C8.2Ø	10†	8.2	1.0	50m	2.0	6.0	200J	DO29
111	UDZ8808Ø	10	8.2	1.0	31m	7.0		175A	A356a
112	C2C8.2Ø	10†	8.2	2.5	50m	3.0	6.0	200J	DO1
113	UDZ808Ø	10	8.2	3.0	75m	4.0		175A	A356a
114	1N225AØ	5	8.75	150m	200u			150A	C1
115	IDAZ225,A,B,CØ	5†	8.75	150m	200u			150A	A1hc
116	1N225Ø	10	8.75	150m	200u			150A	C1
117	UDZ8709Ø	5	9.1	1.0	28m	8.0		175A	A356a
118	C4C9.1Ø	10†	9.1	1.0	50m	3.0	6.5	200J	DO29
119	UDZ8809Ø	10	9.1	1.0	28m	8.0		175A	A356a
120	C2C9.1Ø	10†	9.1	2.5	50m	3.0	6.5	200J	DO1
121	UDZ809Ø	10	9.1	3.0	75m	4.0		175A	A356a
122	IDA1Z9.5,A,B,CØ	5†	9.5	1.0	25m			200A	A1ht
123	IDAZ3402,A,B,CØ	5†	10	500m	10m	15	4.0	200A	A1hc
124	IDA1Z10,A,B,CØ	5†	10	1.0	25m			200A	A1ht
125	UDZ8710Ø	5	10	1.0	25m	8.5		175A	A356a
126	C4C10Ø	10†	10	1.0	50m	4.0	7.0	200J	DO29
127	UDZ8810Ø	10	10	1.0	25m	8.5		175A	A356a
128	C2C10Ø	10†	10	2.5	50m	4.0	7.0	200J	DO1
129	UDZ810Ø	10	10	3.0	75m	5.0		175A	A356a
130	1N226AØ	5	10.5	150m	200u			150A	C1
131	IDAZ226,A,B,CØ	5†	10.5	150m	200u			150A	A1hc
132	1N226Ø	10	10.5	150m	200u			150A	C1
133	C4C11Ø	10†	11	1.0	25m	6.0	7.0	200J	DO29
134	C2C11Ø	10†	11	2.5	50m	5.0	7.0	200J	DO1
135	IDAZ3403,A,B,CØ	5†	12	500m	10m	15	4.0	200A	A1hc
136	UDZ8712Ø	5	12	1.0	23m	9.0		175A	A356a
137	C4C12Ø	10†	12	1.0	25m	7.0	7.5	200J	DO29
138	UDZ8812Ø	10	12	1.0	23m	9.0		175A	A356a
139	C2C12Ø	10†	12	2.5	50m	6.0	7.5	200J	DO1
140	UDZ812Ø	10	12	3.0	65m	5.0		175A	A356a
141	1N227AØ	5	12.8	150m	200u			150A	C1
142	IDAZ227,A,B,CØ	5†	12.8	150m	200m			150A	A1hc
143	1N227Ø	10	12.8	150m	200u			150A	C1
144	C4C13Ø	10†	13	1.0	25m	8.0	7.5	200J	DO29
145	C2C13Ø	10†	13	2.5	50m	7.0	7.5	200J	DO1
146	IDA1Z14,A,B,CØ	5†	14	1.0	25m			200A	A1ht
147	IDAZ3404,A,B,CØ	5†	15	500m	10m	25	4.5	200A	A1hc
148	UDZ8715Ø	5	15	1.0	17m	14		175A	A356a
149	C4C15Ø	10†	15	1.0	25m	10	8.0	200J	DO29
150	UDZ8815Ø	10	15	1.0	17m	14		175A	A356a
151	C2C15Ø	10†	15	2.5	50m	9.0	8.0	200J	DO1
152	UDZ815Ø	10	15	3.0	50m	6.0		175A	A356a
153	1N228AØ	5	15.7	150m	200u			150A	C1
154	IDAZ228,A,B,CØ	5†	15.7	150m	200u			150A	A1hc
155	1N228Ø	10	15.7	150m	200u			150A	C1
156	C4C16Ø	10†	16	1.0	25m	12	8.0	200J	DO29
157	C2C16Ø	10†	16	2.5	20m	12	8.0	200J	DO1
158	IDAZ3405,A,B,CØ	5†	18	500m	10m	35	5.0	200A	A1hc
159	IDA1Z18,A,B,CØ	5†	18	1.0	25m			200A	A1ht
160	UDZ8718Ø	5	18	1.0	14m	20		175A	A356a
161	C4C18Ø	10†	18	1.0	25m	15	8.0	200J	DO29
162	UDZ8818Ø	10	18	1.0	14m	20		175A	A356a
163	C2C18Ø	10†	18	2.5	20m	14	8.0	200J	DO1
164	UDZ818Ø	10	18	3.0	40m	8.0		175A	A356a
165	1N229AØ	5	19	150m	200u			150A	C1
166	IDAZ229,A,B,CØ	5†	19	150m	200u			150A	A1hc
167	1N229Ø	10	19	150m	200u			150A	C1
168	UDZ8720Ø	5	20	1.0	12m	23		175A	A356a
169	C4C20Ø	10†	20	1.0	25m	18	8.5	200J	DO29
170	UDZ8820Ø	10	20	1.0	12m	23		175A	A356a
171	C2C20Ø	10†	20	2.5	20m	15	8.5	200J	DO1
172	UDZ820Ø	10	20	3.0	40m	9.0		175A	A356a
173	IDAZ3406,A,B,CØ	5†	22	500m	3.0m	50	5.6	200A	A1hc
174	IDA1Z22,A,B,CØ	5†	22	1.0	25m			200A	A1ht
175	C4C22Ø	10†	22	1.0	10m	27	9.0	200J	DO29
176	C2C22Ø	10†	22	2.5	20m	16	9.0	200J	DO1
177	1N230AØ	5	23.5	150m	200u			150A	C1
178	IDAZ230,A,B,CØ	5†	23.5	150m	200u			150A	A1hc
179	1N230Ø	10	23.5	150m	200u			150A	C1
180	UDZ8724Ø	5	24	1.0	10m	25		175A	A356a
181	C4C24Ø	10†	24	1.0	10m	29	9.0	200J	DO29
182	UDZ8824Ø	10	24	1.0	10m	25		175A	A356a
183	C2C24Ø	10†	24	2.5	20m	18	9.0	200J	DO1
184	C7C24Ø	10†	24	2.5	500m	2.0	9.0	200J	S457
185	UDZ824Ø	10	24	3.0	30m	10		175A	A356a

SYMBOLS AND CODES EXPLAINED IN INTERPRETER

2. VOLTAGE REFERENCE DIODES - Double-anode Types (Cont'd)

IN ORDER OF: (1) REF. VOLTAGE (2) PD MAX (3) TOLERANCE & (4) TYPE NUMBER

LINE No.	4 TYPE No.	3 TOL ± (%)	1 NOM. REF. VOLT. (V)	2 PD @ 25°C MAX (W)	TEST CUR. Izt (A)	DYN. IMP. MAX (Ω)	TEMP. COEFF Tc MAX	TEMP MAX (°C)	DWG. NO.
1	IDA1Z26,A,B,CØ								
		5†	26	1.0	22m			200A	A1ht
2	IDAZ3407,A,B,CØ								
		5†	27	500m	3.0m	60	6.8	200A	A1hc
3	UDZ8727Ø	5	27	1.0	9.5m	35		175A	A356a
4	C4C27Ø	10†	27	1.0	10m	32	9.5	200J	DO29
5	UDZ8827Ø	10	27	1.0	9.5m	35		175A	A356a
6	C2C27Ø	10†	27	2.5	20m	20	9.5	200J	DO1
7	C7C27Ø	10†	27	2.5	500m	2.0	9.5	200J	S457
8	UDZ827Ø	10	27	3.0	25m	12		175A	A356a
9	1N231AØ	5	28.5	150m	200u			150A	C1
10	IDAZ231,A,B,CØ								
		5†	28.5	150m	200u			150A	A1hc
11	1N231Ø	10	28.5	150m	200u			150A	C1
12	DZC30Ø		30	1.0	10m	30		150J	A298ap
13	IDA1Z30,A,B,CØ								
		5†	30	1.0	22m			200A	A1ht
14	UDZ8730Ø	5	30	1.0	8.5m	40		175A	A356a
15	C4C30Ø	10†	30	1.0	10m	34	9.5	200J	DO29
16	UDZ8830Ø	10	30	1.0	8.5m	40		175A	A356a
17	C2C30Ø	10†	30	2.5	20m	25	9.5	200J	DO1
18	C7C30Ø	10†	30	2.5	500m	2.5	9.5	200J	S457
19	UDZ830Ø	10	30	3.0	25m	15		175A	A356a
20	IDAZ3408,A,B,CØ								
		5†	33	500m	3.0m	80	6.8	200A	A1hc
21	UDZ8733Ø	5	33	1.0	7.5m	45		175A	A356a
22	C4C33Ø	10†	33	1.0	10m	36	10	200J	DO29
23	UDZ8833Ø	10	33	1.0	7.5m	45		175A	A356a
24	C2C33Ø	10†	33	2.5	20m	30	10	200J	DO1
25	C7C33Ø	10†	33	2.5	500m	3.0	10	200J	S457
26	UDZ833Ø	10	33	3.0	20m	21		175A	A356a
27	IDA1Z34,A,B,CØ								
		5†	34	1.0	21m			200A	A1ht
28	1N232AØ	5	34.5	150m	200u			150A	C1
29	IDAZ232,A,B,CØ								
		5†	34.5	150m	200u			150A	A1hc
30	1N232Ø	10	34.5	150m	200u			150A	C1
31	UDZ8736Ø	5	36	1.0	7.0m	50		175A	A356a
32	C4C36Ø	10†	36	1.0	10m	38	10	200J	DO29
33	UDZ8836Ø	10	36	1.0	7.0m	50		175A	A356a
34	C2C36Ø	10†	36	2.5	20m	35	10	200J	DO1
35	C7C36Ø	10†	36	2.5	200m	4.0	10	200J	S457
36	UDZ836Ø	10	36	3.0	20m	21		175A	A356a
37	IDA1Z38,A,B,CØ								
		5†	38	1.0	21m			200A	A1ht
38	IDAZ3409,A,B,CØ								
		5†	39	500m	1.5m	190	6.8	200A	A1hc
39	C4C39Ø	10†	39	1.0	10m	45	10	200J	DO29
40	C2C39Ø	10†	39	2.5	10m	45	10	200J	DO1
41	C7C39Ø	10†	39	2.5	200m	5.0	10	200J	S457
42	UDZ8740Ø	5	40	1.0	6.5m	62		175A	A356a
43	UDZ8840Ø	10	40	1.0	6.5m	62		175A	A356a
44	UDZ840Ø	10	40	3.0	20m	27		175A	A356a
45	1N233AØ	5	41	150m	200u			150A	C1
46	IDAZ233,A,B,CØ								
		5†	41	150m	200u			150A	A1hc
47	1N233Ø	10	41	150m	200u			150A	C1
48	IDA1Z42,A,B,CØ								
		5†	42	1.0	20m			200A	A1ht
49	C4C43Ø	10†	43	1.0	10m	60	10	200J	DO29
50	C2C43Ø	10†	43	2.5	10m	60	10	200J	DO1
51	C7C43Ø	10†	43	2.5	200m	6.5	10	200J	S457
52	UDZ8745Ø	5	45	1.0	6.0m	75		175A	A356a
53	UDZ8845Ø	10	45	1.0	6.0m	75		175A	A356a
54	UDZ845Ø	10	45	3.0	15m	37		175A	A356a
55	IDA1Z46,A,B,CØ								
		5†	46	1.0	20m			200A	A1ht
56	IDAZ3410,A,B,CØ								
		5†	47	500m	1.5m	220	7.0	200A	A1hc
57	C4C47Ø	10†	47	1.0	10m	70	10	200J	DO29
58	C2C47Ø	10†	47	2.5	10m	70	10	200J	DO1
59	C7C47Ø	10†	47	2.5	200m	7.0	10	200J	S457
60	1N234AØ	5	48	150m	200u			150A	C1
61	IDAZ234,A,B,CØ								
		5†	48	150m	200u	220	7.0	150A	A1hc
62	1N234Ø	10	48	150m	200u			150A	C1
63	DZC50Ø		50	1.0	6.0m	65		150J	A298ap
64	C4C51Ø	10†	51	1.0	5.0m	90	10	200J	DO29
65	C2C51Ø	10†	51	2.5	10m	90	10	200J	DO1
66	C7C51Ø	10†	51	2.5	200m	7.5	10	200J	S457
67	IDA1Z52,A,B,CØ								
		5†	52	1.0	18m			200A	A1ht
68	IDA1Z56,A,B,CØ								
		5†	56	1.0	18m			200A	A1ht
69	C4C56Ø	10†	56	1.0	5.0m	100	11	200J	DO29
70	C2C56Ø	10†	56	2.5	10m	100	10	200J	DO1
71	C7C56Ø	10†	56	2.5	200m	8.0	10	200J	S457
72	1N235AØ	5	58	150m	200u			150A	C1
73	IDAZ235,A,B,CØ								
		5†	58	150m	200u			150A	A1hc
74	1N235Ø	10	58	150m	200u			150A	C1
75	IDA1Z60,A,B,CØ								
		5†	60	1.0	17m			200A	A1ht
76	UDZ8760Ø	5	60	1.0	4.0m	125		175A	A356a
77	UDZ8860Ø	10	60	1.0	4.0m	125		175A	A356a
78	UDZ860Ø	10	60	3.0	10m	70		175A	A356a
79	IDAZ62,A,B,CØ								
		5†	62	500m	3.0m			200A	A1hc
80	C4C62Ø	10†	62	1.0	5.0m	110	11	200J	DO29
81	C2C62Ø	10†	62	2.5	10m	110	11	200J	DO1
82	C7C62Ø	10†	62	2.5	200m	9.0	11	200J	S457
83	IDA1Z64,A,B,CØ								
		5†	64	1.0	17m			200A	A1ht
84	IDAZ66,A,B,CØ								
		5†	66	500m	3.0m			200A	A1hc
85	IDA1Z68,A,B,CØ								
		5†	68	1.0	16m			200A	A1ht
86	C4C68Ø	10†	68	1.0	5.0m	120	11	200J	DO29
87	C2C68Ø	10†	68	2.5	10m	120	11	200J	DO1
88	C7C68Ø	10†	68	2.5	200m	10	11	200J	S457
89	IDAZ70,A,B,CØ								
		5†	70	500m	3.0m			200A	A1hc
90	IDA1Z72,A,B,CØ								
		5†	72	1.0	16m			200A	A1ht
91	IDAZ74,A,B,CØ								
		5†	74	500m	3.0m			200A	A1hc
92	C4C75Ø	10†	75	1.0	5.0m	130	11	200J	DO29
93	C2C75Ø	10†	75	2.5	10m	130	11	200J	DO1
94	C7C75Ø	10†	75	2.5	200m	11	11	200J	S457
95	IDA1Z76,A,B,CØ								
		5†	76	1.0	15m			200A	A1ht
96	IDAZ78,A,B,CØ								
		5†	78	500m	3.0m			200A	A1hc
97	IDA1Z80,A,B,CØ								
		5†	80	1.0	15m			200A	A1ht
98	IDAZ82,A,B,CØ								
		5†	82	500m	3.0m			200A	A1hc
99	C4C82Ø	10†	82	1.0	5.0m	175	11	200J	DO29
100	C2C82Ø	10†	82	2.5	10m	175	11	200J	DO1
101	C7C82Ø	10†	82	2.5	100m	15	11	200J	S457
102	IDA1Z84,A,B,CØ								
		5†	84	1.0	14m			200A	A1ht
103	IDAZ86,A,B,CØ								
		5†	86	500m	3.0m			200A	A1hc
104	IDA1Z88,A,B,CØ								
		5†	88	1.0	14m			200A	A1ht
105	IDAZ90,A,B,CØ								
		5†	90	500m	3.0m			200A	A1hc
106	C4C91Ø	10†	91	1.0	5.0m	200	11	200J	DO29
107	C2C91Ø	10†	91	2.5	5.0m	200	11	200J	DO1
108	C7C91Ø	10†	91	2.5	100m	20	11	200J	S457
109	IDA1Z92,A,B,CØ								
		5†	92	1.0	13m			200A	A1ht
110	IDAZ94,A,B,CØ								
		5†	94	500m	3.0m			200A	A1hc
111	IDA1Z96,A,B,CØ								
		5†	96	1.0	12m			200A	A1ht
112	IDAZ98,A,B,CØ								
		5†	98	500m	3.0m			200A	A1hc
113	IDAZ100,A,B,CØ								
		5†	100	500m	3.0m			200A	A1hc
114	IDA1Z100,A,B,CØ								
		5†	100	1.0	10m			200A	A1ht
115	C4C100Ø	10†	100	1.0	2.5m	350	11	200J	DO29
116	C2C100Ø	10†	100	2.5	5.0m	250	11	200J	DO1
117	C7C100Ø	10†	100	2.5	100m	20	11	200J	S457
118	UDZ110Ø	5	100	3.0	5.0m	175		175A	A356a
119	IDAZ104,A,B,CØ								
		5†	104	500m	1.0m			200A	A1hc
120	IDA1Z104,A,B,CØ								
		5†	104	1.0	10m			200A	A1ht
121	IDAZ108,A,B,CØ								
		5†	108	500m	1.0m			200A	A1hc
122	IDA1Z108,A,B,CØ								
		5†	108	1.0	10m			200A	A1ht
123	C4C110Ø	10†	110	1.0	2.5m	450	11	200J	DO29
124	C2C110Ø	10†	110	2.5	5.0m	350	11	200J	DO1
125	C7C110Ø	10†	110	2.5	100m	25	11	200J	S457
126	IDAZ112,A,B,CØ								
		5†	112	500m	1.0m			200A	A1hc
127	IDA1Z112,A,B,CØ								
		5†	112	1.0	9.0m			200A	A1ht
128	IDAZ116,A,B,CØ								
		5†	116	500m	1.0m			200A	A1hc
129	IDA1Z116,A,B,CØ								
		5†	116	1.0	9.0m			200A	A1ht
130	IDAZ120,A,B,CØ								
		5†	120	500m	1.0m			200A	A1hc
131	IDA1Z120,A,B,CØ								
		5†	120	1.0	9.0m			200A	A1ht
132	C4C120Ø	10†	120	1.0	2.5m	550	11	200J	DO29
133	C2C120Ø	10†	120	2.5	5.0m	400	11	200J	DO1
134	C7C120Ø	10†	120	2.5	100m	25	11	200J	S457
135	IDAZ124,A,B,CØ								
		5†	124	500m	1.0m			200A	A1hc
136	IDA1Z124,A,B,CØ								
		5†	124	1.0	8.0m			200A	A1ht
137	IDAZ128,A,B,CØ								
		5†	128	500m	1.0m			200A	A1hc
138	IDA1Z128,A,B,CØ								
		5†	128	1.0	8.0m			200A	A1ht
139	C4C130Ø	10†	130	1.0	2.5m	650	11	200J	DO29
140	C2C130Ø	10†	130	2.5	5.0m	450	11	200J	DO1
141	C7C130Ø	10†	130	2.5	100m	30	11	200J	S457
142	IDAZ132,A,B,CØ								
		5†	132	500m	1.0m			200A	A1hc
143	IDA1Z132,A,B,CØ								
		5†	132	1.0	6.0m			200A	A1ht
144	IDAZ136,A,B,CØ								
		5†	136	500m	1.0m			200A	A1hc
145	IDA1Z136,A,B,CØ								
		5†	136	1.0	6.0m			200A	A1ht
146	IDAZ140,A,B,CØ								
		5†	140	500m	1.0m			200A	A1hc
147	IDA1Z140,A,B,CØ								
		5†	140	1.0	5.0m			200A	A1ht
148	IDAZ144,A,B,CØ								
		5†	144	500m	1.0m			200A	A1hc
149	IDA1Z144,A,B,CØ								
		5†	144	1.0	5.0m			200A	A1ht
150	IDAZ148,A,B,CØ								
		5†	148	500m	1.0m			200A	A1hc
151	IDA1Z148,A,B,CØ								
		5†	148	1.0	4.0m			200A	A1ht
152	IDA1Z150,A,B,CØ								
		5†	150	1.0	3.0m			200A	A1ht
153	C4C150Ø	10†	150	1.0	2.5m	800	11	200J	DO29
154	C2C150Ø	10†	150	2.5	5.0m	500	11	200J	DO1
155	C7C150Ø	10†	150	2.5	100m	40	11	200J	S457
156	C4C160Ø	10†	160	1.0	2.5m	1.0k	11	200J	DO29

SYMBOLS AND CODES EXPLAINED IN INTERPRETER

2. VOLTAGE REFERENCE DIODES - Double-anode Types (Cont'd)

IN ORDER OF: (1) REF. VOLTAGE (2) PD MAX (3) TOLERANCE & (4) TYPE NUMBER

LINE No.	4 TYPE No.	3 TOL ± (%)	1 NOM. REF. VOLT. (V)	2 PD @ 25°C MAX (W)	TEST CUR. Izt (A)	DYN. IMP. MAX (Ω)	TEMP. COEFF Tc MAX	TEMP MAX (°C)	DWG. NO.
1	C2C160Ø	10†	160	2.5	5.0m	750	11	200J	DO1
2	C7C160Ø	10†	160	2.5	100m	50	11	200J	S457
3	C4C180Ø	10†	180	1.0	2.5m	1.2k	11	200J	DO29
4	C2C180Ø	10†	180	2.5	5.0m	1.0k	11	200J	DO1
5	C7C180Ø	10†	180	2.5	100m	60	11	200J	S457
6	C4C200Ø	10†	200	1.0	2.5m	1.4k	11	200J	DO29
7	C2C200Ø	10†	200	2.5	5.0m	1.2k	11	200J	DO1
8	C7C200Ø	10†	200	2.5	100m	70	11	200J	S457
9	UDZ122Ø	5	220	3.0	3.0m	325		175A	A356a
10	C2C400Ø	10†	400	2.5	1.0m	3.0k	11	200J	DO1
11	C7C400Ø	10†	400	2.5	50m	200	11	200J	S457

LINE No.	4 TYPE No.	3 TOL ± (%)	1 NOM. REF. VOLT. (V)	2 PD @ 25°C MAX (W)	TEST CUR. Izt (A)	DYN. IMP. MAX (Ω)	TEMP. COEFF Tc MAX	TEMP MAX (°C)	DWG. NO.

Precision voltage reference ICs may be found in the Linear Integrated Circuits D.A.T.A.BOOK.

3. GENERAL-PURPOSE DIODES - Devices to 1A

IN ORDER OF: (1) PIV (2) IO RATED MAX (3) IF MIN (4) @ VF & (5) TYPE NUMBER

LINE No.	5 TYPE NO.	1 PIV (V)	MINIMUM FORWARD CURRENT 3 IF (A)	4 @VF (V)	2 IO RATED MAX (A)	MAX. TEMP. (°C)	MAT.	DRAWING NO.
1	1S1650	40				150J	Si	DO7
2	1S1651	40				150J	Si	DO7
3	1S2236	15				150J	Si	DO35
4	1SV69	30				150J	Si$#	DO35
5	1SV70	30				150J	Si$#	DO35
6	1SV89	32				150J	Si$#	DO35
7	1SV110	30				125J	Si$#	A277s
8	1SV111	30				125J	Si$#	A277s
9	1SV124	32				150J	Si	A380d
10	1SV126	30				150J	Si	A380d
11	1SV134	15				125J	Si	DO41
12	1SV146	30				125J	Si	Alabg
13	HVK89	34				125J	Si	A380d
DEVICES TO 1 A								
17	1N3381	15	500n	1.0		200S	Si	F128
18	1N3382	30	500n	1.0		200S	Si	F128
19	1N3383	50	500n	1.0		200S	Si	F128
20	1N3384	75	500n	1.0		200S	Si	F128
21	1N3385	100	500n	1.0		200S	Si	F128
22	1N3386	150	500n	1.0		200S	Si	F128
23	1N3387	200	500n	1.0		200S	Si	F128
24	1N3388	250	500n	1.0		200S	Si	F128
25	1N3389	300	500n	1.0		200S	Si	F128
26	1N3390	400	500n	1.0		200S	Si	F128
27	1N3391	500	500n	1.0		200S	Si	F128
28	1N4453	30	10u	430m		200S	Si	DO35
29	2AA116	30	.10m	.25			GE	DO7
30	1N4455	50	.10m	.52		200S	Si	DO7
31	1N527	10 $	1.0m	.30		75A	Ge	A9k
32	LL101C	40	1.0m	390m		200J	Si♦	F139
33	LL101B	50	1.0m	400m		200J	Si♦	F139
34	LL101A	60	1.0m	410m		200J	Si♦	F139
35	1N4950	25	1.0m	.53		175	Si	DO7
36♦	ST24	20	1.0m	.65		150	Si	DO7
37	TSD6100	90	1.0m	.70				
38	TSD7000	90	1.0m	.70				
39	1N4951	20	1.0m	850m		100A	Si	L8a
40	1N4952	50	1.0m	850m		100A	Si	L8a
41	1N5179	20	1.0m	2.2		175A	Si	A1av
42	1N4389	5.0	2.0m	1.0		150S	Si	DO7
43	AAY53	36	2.0m	1.0			GeØ	F3p
44	AAY54	36	2.0m	1.0			GeØ	F3p
45	AAY55	36	2.0m	1.0			GeØ	F3p
46	GD12E	20	2.0m	1.0			Ge	A99
47	GD74E3	60	2.0m	1.0			Ge	F65
48	GD74E4	60	2.0m	1.0			Ge	F65
49	GD74E5	60	2.0m	1.0			Ge	F65
50	RL252	30	2.0m	1.0		60	Ge	DO7$
51	1N304	55	2.0m	1.5			Ge	A1sh
52	SFD12	45	2.7m	1.0			GE	DO7
53	1N4502	20	3.0m	.30		85S	Ge	DO7
54	1N133	5.0	3.0m	.50			Ge	DO7
55	1N64A	20	3.0m	1.0		90	Ge	DO7
56	1N330	32	3.0m	1.0		100A	Si*	DO7
57	1N619	30	3.0m	1.0		150S	Si	A1
58	1N805	40	3.0m	1.0			Ge	A1sh
59	1N5607	200	3.0m	1.0		200S	Si	DO35
60	1N57	80	4.0m	1.0			Ge	A1sh
61	1N265	80	4.0m	1.0			Ge	DO7
62	AA123#B	24	4.0m	1.0			GE	DO7
63	AA130#B	15	4.5m	1.0			GE	DO7
64	1N568	50	5.0m	.32			Ge	DO7
65	1N49	75	5.0m	1.0			Ge	DO7
66	1N50	75	5.0m	1.0			Ge	DO7
67	1N55	150	5.0m	1.0		90A	GeØ	DO7
68	1N62	140	5.0m	1.0			Ge	DO7
69	1N83	375	5.0m	1.0			Ge	DO7
70	1N88	90	5.0m	1.0			Ge	A1sh
71	1N135	75	5.0m	1.0			Ge	DO7
72	1N175	125	5.0m	1.0			Ge	DO7
73	1N266	50 *	5.0m	1.0			Ge	DO7
74	1N267	30	5.0m	1.0			Ge	DO7
75	1N290	100	5.0m	1.0		90	Ge	DO7
76	1N331	16	5.0m	1.0		100A	Si*	DO7
77	1N4092	50	5.0m	1.0		150S	Si	DO7
78	1N4093	50	5.0m	1.0		150S	Si	DO7
79	AA118	90	5.0m	1.0		75	Ge	DO7
80	GD11E	20	5.0m	1.0			Ge	A99
81	SFD103	30	5.5m	1.0			GE	DO7
82	2SFD111	30	6.0m	1.0			GE	DO7
83	SFD111	30	6.0m	1.0			GE	DO7
84	1N622	150	7.0m	1.0		150S	Si	A1
85	1N5606	150	7.0m	1.0		200S	Si	DO35
86	AA121#B	25	7.0m	1.0			GE	DO7
87	A20	20	10m	250m			Ge	DO7
88	1N949	50	10m	.39		90A	Ge	A1bz
89	1N3483	8.0	10m	400m		75S	Ge	DO7
90	1N3484	75	10m	450m		75S	Ge	DO7
91	SFD037A	15	10m	.45			GE	DO7
92	1N3626	50	10m	.50		90S	Ge	DO7
93	1N4512	10	10m	850m		150S	Si	C3k
94	1N116A	70 *	10m	1.0			Ge	A1sh
95	1S2835	35	10m	1.0				
96	1S2836	75	10m	1.0				
97	1S2837	35	10m	1.0				
98	1S2838	75	10m	1.0				
99	FD100#B	50	10m	1.0			GE	DO35
100	HG1090	30	10m	1.0		90	GeØ	DO7
101	TMPD914	100	10m	1.0		150J		M500
102	TMPD2835	35	10m	1.0		150J		M500
103	TMPD2836	75	10m	1.0		150J		M500
104	TMPD2837	35	10m	1.0		150J		M500
105	TMPD2838	75	10m	1.0		150J		M500
106	BA166	20	10m	1.4		150A	Si	DO35
107	2A119	45	10m	1.5			GE	DO7
108	2AA112#B	20	10m	1.5			GE	DO7
109	2OA90	30	10m	1.5			GE	DO7
110	AA112#B	20	10m	1.5			GE	DO7
111	AA114	30	10m	1.5			GE	DO7 -
112	AA137#B	40	10m	1.5			GE	DO7
113	AA138#B	25	10m	1.5			GE	DO7
114	AD110A	30	10m	1.5		85A	Δ	A377
115	MPD200	70	10m	1.5		175A	Si#$	A1aa
116	MPD203	50	10m	1.5			Si	A1aa
117	2AA113#B	65	10m	1.6			GE	DO7
118	MPD201	50	10m	1.6			Si	A1aa
119	STB567	12 Δ	10m	1.6		175A	Si$#	A1aa
120	MPD300	100	10m	2.3		175A	Si#$	A1ae
121	MPD301	60	10m	2.3			Si	A1ae
122	MPD302	60	10m	2.3			Si	A1ae
123	STB568	12 Δ	10m	2.3		175A	Si$#	A1ae
124	MPD400	120	10m	3.0		175A	Si#$	A1an
125	MPD401	75	10m	3.0			Si	A1an
126	MPD402	75	10m	3.0			Si	A1an
127	STB569	12 Δ	10m	3.0		175A	Si$#	A1an
128	DR365	30 *	10m	4.0			GeØ	DO7
129	1N41	32 *	12m	1.5		75	Ge	M4$
130	1N42	115 *	12m	1.5			Ge	DO7§
131	1N102	125	15m	1.0			Ge	DO7
132	1N5711	55	15m	1.0		200S	Si	A1ac
133	1N6263	60	15m	1.0		200S	Si	DO35
134	HSCH-1001	60	15m	1.0		200J	Si♦	DO35
135	1N73	70 *	15m	1.5			Ge	DO7§
136	1N367	15	20m				Ge	A32d
137	BBY40	28	20m			85J	Si	M500b
138	LL103A	40	20m	370m		125J	Si♦	F139
139	LL103B	30	20m	370m		125J	Si♦	F139
140	LL103C	20	20m	370m		125J	Si♦	F139
141	1N97A	92 *	20m	1.0			Ge	A1sh
142	1N99A	92 *	20m	1.0			Ge	A1sh
143	1N117A	70 *	20m	1.0			Ge	A1sh
144	1N278	58 *	20m	1.0		90	GeØ	DO7
145	1N287	40	20m	1.0		90	Ge	DO7
146	1N566	275	20m	1.0			Ge	DO7
147	1N5605	70	20m	1.0		200S	Si	DO35
148	1N5713	12	20m	1.0		200S	Si	A1ac
149	1N3769	90	25m	.50		100	GeØ	DO7
150	PTC210	11k	25m	18			Se	A347
151	PTC211	13k	25m	35			Se	A347a
152	PTC212	18k	25m	35			Se	F12au
153	PTC213	20k	25m	35			Se	F12at
154	1N3991	35	30m	.55		90S	Ge	DO7
155	1N103	20	30m	1.0			Ge	DO7
156	1N104	25	30m	1.0			Ge	DO7
157	OA200#B	50	30m	1.1			GE	DO7
158	2AA118	115	30m	2.6			GE	DO7
159	2AA117	115	30m	3.3			GE	DO7
160	1N5712	16	35m	1.0		200S	Si	A1ac
161	CD0057	20	35m	1.0		200A	Si	u38b
162	1N145	40	40m	1.0		80A	GeØ	A1sh
163	1N282	15	40m	1.0		100S	Ge	DO7
164	1N288	70	40m	1.0		90	Ge	DO7
165	1N291	100	40m	1.0		90	Ge	DO7
166	1N3564	15	40m	1.0		100S	Ge	DO7$
167	1N5426	25	40m	1.0		150A	Si	
168	DR336	115 *	40m	1.0			GeØ	DO7
169	DR337	115 *	40m	1.0			GeØ	DO7
170	DR338	86 *	40m	1.0			GeØ	DO7
171	1N108	50	50m	1.0		90	Ge	DO7
172▼	BA679	30	50m	1.0		125J	Si	F138
173	DR128	86 *	50m	1.0			GeØ	DO7
174	DR283	86 *	50m	1.0			GeØ	DO7
175	DR291	70 *	50m	1.0			GeØ	DO7
176	DR292	150 *	50m	1.0			GeØ	DO7
177	DR315	175 *	50m	1.0			GeØ	DO7
178	DR316	150 *	50m	1.0			GeØ	DO7
179	DR317	115 *	50m	1.0			GeØ	DO7
180	DR318	86 *	50m	1.0			GeØ	DO7
181	DR319	86 *	50m	1.0			GeØ	DO7
182	DR366	86 *	50m	1.0			GeØ	DO7
183	PTC206	50	50m	1.0			Ge	A1by
184	PTC206M	50	50m	1.0			Ge	A1by
185	PTC207	60	50m	1.0			Ge	A1by
186	PTC207M	60	50m	1.0			Ge	A1by
187	1N5220	30	50m	1.1		175S	Si	DO7
188	1N84	25	60m	1.0			Ge	DO7
189	1N2326	-1	100m#	240m		85	Ge*	C18g
190	C3141	40	100m	850m		175A	Si	DO7
191	C3142	75	100m	900m		175A	Si	DO7
192	C3143	100	100m	950m		175A	Si	DO7
193	C3144	150	100m	970m		175A	Si	DO7
194	1N277	125 *	100m	1.0		90	GeØ	DO7
195	1N452	35 *	100m	1.0		90A	GeØ	DO7
196	1N453	115 *	100m	1.0		90A	GeØ	DO7
197	1N482C	36	100m	1.0			Si	A1bz
198	1N483C	70	100m	1.0			Si	A1bz
199	1N484C	130	.10	1.0			Si	A1bz
200	1N485C	180	.10	1.0			Si	A1bz
201	1N3147	60	100m	1.0		200	Si	A1ce
202	1N3179	240	100m	1.0		200S	Si	DO14
203	1N4088	30	100m	1.0		90A	Ge	DO7
204	1N5719	100	100m	1.0		150S	Si	A1tb
205	1N5767	100	100m	1.0		150S	Si	A1ah
206	1S180	50	100m	1.0			SiΔ	DO7
207	1S181	100	100m	1.0			SiΔ	DO7
208	16P1#B	150	100m	1.0			GE	DO7
209	APD3595	195	100m	1.0			Si#	DO35
210	BA103	6.0	100m	1.0		150J	Si*	C1g
211▼	BA682	35	100m	1.0		150J	Si	F138
212▼	BA683	35	100m	1.0		150J	Si	F138
213♦	BAS33	40	100m	1.0		150	Si#	DO35
214♦	BAS34	70	100m	1.0		150	Si†	DO35
215	BB100	25 $	100m	1.0		200S		DO35
216	DR311	175 *	100m	1.0			GeØ	DO7
217	FDC485B	75	100m	1.0			Si	A1cw
218	HG5085	5.0	100m	1.0		90	GeØ	DO7
219	HG5808	30	100m	1.0		90	GeØ	DO7
220	HP5082-3001	100	100m	1.0		150S	Si	A1tb

SYMBOLS AND CODES EXPLAINED IN INTERPRETER

3. GENERAL-PURPOSE DIODES (Cont'd)

IN ORDER OF: (1) PIV (2) IO RATED MAX (3) IF MIN (4) @ VF & (5) TYPE NUMBER

LINE No.	5 TYPE NO.	1 PIV (V)	MINIMUM FORWARD CURRENT 3 IF (A)	4 @VF (V)	2 IO RATED MAX (A)	MAX. TEMP. (°C)	MAT.	DRAWING NO.
1	HP5082-3080	100	100m	1.0		150S	Si	A1ah
2	PS2207	70	100m	1.0		175A	Si	M174
3	PS2208	70	100m	1.0		175A	Si	M174
4	PS2209	70	100m	1.0		175A	Si	M174
5	1N4828	30	100m	1.1		200S	Si	DO35
6	BA104	100	100m	1.1		150J	Si*	C1g
7	BA105	300	100m	1.1		150J	Si*	C1g
8	BA108	50	100m	1.1		150J	Si*	C1g
9	BAY44	50	100m	1.1			Si	A171f
10	BAY45	150	100m	1.1			Si	A171f
11	BAY46	300	100m	1.1			Si	A171f
12	TMPD6050	70	100m	1.1		150J		M500
13	TMPD6100	70	100m	1.1		150J		M500
14	MT5139	60	100m	1.2		200J		DO34
15	MT5140	110	100m	1.2		200J		DO34
16	DR826	300 *	100m	1.5			Si	DO7
17	1N4156	30	100m	1.8		200S		DO35
18	1N4829	30	100m	1.9		200S	Si	DO35
19	1N4157	30	100m	2.7		200S		DO35
20	1N4830	30	100m	2.7		200S	Si	DO35
21	1N567	125	150m	1.0			Ge	DO7
22	1N3753	55	150m	1.0		100	GeØ	DO7
23▼	SV-2#C	200	150m	1.2		125		
24	1N270	100 *	200m	1.0		90	GeØ	DO7
25	1N283	24	200m	1.0		90	GeØ	DO7
26	1N454	58 *	200m	1.0		90A	GeØ	A1sh
27	1N3559	24	200m	1.0		90	GeØ	DO7$
28	DR668	100 *	.20	1.0		150A	Si	DO7
29	DR670	240 *	.20	1.0		150A	Si	DO7
30	TI51	20	200m	1.0		100A	Si△	A31f
31	TI52	30	200m	1.0		100A	Si△	A31f
32	TI53	40	200m	1.0		100A	Si△	A31f
33	LD2A	100	200m	1.2			Si	u50
34	LD2RA	100	200m	1.2			Si	u50
35	LD4A	100	200m	1.2			Si	u51
36	LD4RA	100	200m	1.2			Si	u51
37	S1R20	200	200m	1.5		100		
38	S1R60	600	200m	1.5		100		
39	S1R80	800	200m	1.5		100		
40	S1R100	1.0k	200m	1.5		100		
41	S1R150	1.5k	200m	1.5		100		
42	1N569	25	250m	.50			Ge	DO7
43▼	SV-3#C	300	250m	600m		125		
44	PTC214	200	250m	1.0			Si	A1tjg
45	1N3643	1.0k	.25	5.0		200S	Si	A83a
46	1N3644	1.5k	.25	5.0		200S	Si	A83a
47	1N3645	2.0k	.25	5.0		200S	Si	A83a
48	1N3646	2.5k	.25	5.0		200S	Si	A83a
49	1N3647	3.0k	.25	5.0		200S	Si	A83a
50	1N3992	4.0k	.25	5.0		200S	Si	A83a
51	1N455	35 *	300m	1.0		90A	GeØ	A1sh
52♦	PTC218	45k	300m	4.4			Si	F51b
53	DR426	50	400m	1.0		85A	Ge	DO7
54	TI58	270	400m	1.0		100A	Si△	A31f
55	TI59	320	400m	1.0		100A	Si△	A31f
56	TI60	400	400m	1.0		100A	Si△	A31f
57	MT2060	600	400m	1.2		200J		DO34
58	MT2060A	600	400m	1.2		200J		DO34
59	MT2061	600	400m	1.2		200J		DO34
60	MT2061A	600	400m	1.2		200J		DO34
61	SV-1	100	500m	300m		125		
62	1N3180	130	500m	1.5		200S	Si	DO14
63	S1R20Z	200	600m	1.0		125		
64	S1R40Z	400	600m	1.0		125		
65	S1VB10	100	600m	1.0		150		
66	S1VB20	200	600m	1.0		150		
67	PTC216	1.4k	1.0	1.0			Si	A3p
68	S1RBA10	100	1.0	1.0		135		
69	S1RBA20	200	1.0	1.0		135		
70	S1RBA20Z	200	1.0	1.0		135		
71	S1RBA40	400	1.0	1.0		135		
72	S1RBA40Z	400	1.0	1.0		135		
73	S1RBA60	600	1.0	1.0		135		
74	S1V20	200	1.0	1.1		150		
75	S1V40	400	1.0	1.1		150		
76▼	S180D	50	1.0	1.1		175J	Si	A94g
77▼	S181D	100	1.0	1.1		175J	Si	A94g
78	1N3929	1.0k	1.0	2.0		175S	Si	DO13
79	1N3931	2.0k	1.0	2.0		175S	Si	DO13
80▼	S380D	50	3.0	1.2		175J	Si	A333e
81▼	S381D	100	3.0	1.2		175J	Si	A333e
82	1N4785	320	7.0	.77		85S	Ge	TO3
83	1N1625	48	100u	1.0	250u	100A	Se	M204a
84	1N1626	96	100u	2.0	250u	100A	Se	M204a
85	1N1625A	48	.20m	1.0	.50m	25A	SeØ	M204a
86	1N1626A	96	.20m	2.0	500u	25A	SeØ	M204a
87	H1802	28k	10m	120	600u	75A		A267g
88	H1152	25k	10m	80	1.5m	100C		A1aam
89	BY184	1.8k	100m	5.0	2.0m	75J	Si	A1xt
90	H485-62	22k	10m	70	2.2m	100A		A1aal
91	H1153	45k	10m	160	2.2m	90A		F95
92	AA113	60	3.5m	1.0	2.5m	100J	GeØ	A1ce
93	H1701-9	9.0k	5.0m	40	3.0m	120J		A393a
94	H1701-10	10k	5.0m	40	3.0m	120J		A393a
95	H1701-11	11k	5.0m	40	3.0m	120J		A393a
96	H1701-12	12k	5.0m	40	3.0m	120J		A393a
97	H1701-15	15K	5.0m	40	3.0m	120J		A393a
98	H521	12k	10m	25	3.0m	85C		A1aal
99	1N1627	48	1.5m	1.0	3.8m	25A	SeØ	M204b
100	1N1628	96	1.5m	2.0	3.8m	25A	SeØ	M204b
101	1N1629	144	1.5m	3.0	3.8m	25A	SeØ	M204b
102	1N1630	192	1.5m	4.0	3.8m	25A	SeØ	M204c
103	1N1631	240	1.5m	5.0	3.8m	25A	SeØ	M204c
104	1N1632	288	1.5m	6.0	3.8m	25A	SeØ	M204e
105	1N1633	336	1.5m	7.0	3.8m	25A	SeØ	M204e
106	1N1634	384	1.5m	8.0	3.8m	25A	SeØ	M204e
107	A120UF	12k	1.0m	15	5.0m	150A	Si	A109j
108	A160UF	16k	1.0m	20	5.0m	150A	Si	A109j
109	A200UF	20k	1.0m	25	5.0m	150A	Si	A109j
110	MQ8/5	340	10m	14	5.0m	55A	Se	

LINE No.	5 TYPE NO.	1 PIV (V)	MINIMUM FORWARD CURRENT 3 IF (A)	4 @VF (V)	2 IO RATED MAX (A)	MAX. TEMP. (°C)	MAT.	DRAWING NO.
111	DHB08	8.0k	10m	25	5.0m	120J	Si△	A1fe
112	WG1010A	15	50m	1.0	5.0m		Si	DO35
113	1N222	470	1.5m	4.0	5.5m	150A	Si*	C1
114	1N221	390	2.0m	4.0	6.0m	150A	Si*	C1
115	1N1850	470	2.0m	4.0	6.0m	150A	Si	C12a
116	1N220	330	2.2m	4.0	7.0m	150A	Si*	C1
117	1N219	270	3.0m	4.0	7.5m	150A	Si*	C1
118	1N1849	330	3.0m	4.0	7.5m	150A	Si	C12a
119	1N218	220	6.0m	4.0	8.0m	150A	Si*	C1
120	1N217	180	6.5m	4.0	9.0m	150A	Si*	C1
121	1N1848	220	6.5m	4.0	9.0m	150A	Si	C12a
122	1N138B	18	40m	1.0	9.0m	150A	Si	C12a
123	1N216	150	.70m	1.0	9.5m	150A	Si*	C1
124	1N394	150	.70m	1.0	9.5m	150A	Si	DO7
125	1N431	68	10m		10m	150A	Si	C1
126	OA90	30	10m	1.5	10m	75A	GeØ	DO7
127	1N215	120	.90m	1.0	11m	150A	Si*	C1
128	1N393	120	.90m	1.0	11m	150A	Si	DO7
129	1N1847	150	1.0m	1.0	11m	150A	Si	C12a
130	1N1635	48	5.0m	1.0	13m	25A	SeØ	M204f
131	1N1636	96	5.0m	2.0	13m	25A	SeØ	M204f
132	1N1637	144	5.0m	3.0	13m	25A	SeØ	M204f
133	1N1638	192	5.0m	4.0	13m	25A	SeØ	M204f
134	1N1639	240	5.0m	5.0	13m	25A	SeØ	M204f
135	1N350	70	20m	1.0	15m		Si	C12a
136	1N351	120	20m	1.0	15m		Si	C12a
137	1N352	170	20m	1.0	15m		Si	C12a
138	1N353	25	20m	1.0	15m		Si	C12a
139	1N354	325	20m	1.0	15m		Si	C12a
140	1N213	82	1.5m	1.0	16m	150A	Si*	C1
141	1N391	82	1.5m	1.0	16m	150A	Si	DO7
142	1N1846	100	1.5m	1.0	16m	150A	Si	C12a
143	1N36	36 *	4.0m	1.0	16m	75	Ge	A1sh
144	1N212	68	2.0m	1.0	19m	150A	Si*	C1
145	1N390	68	2.0m	1.0	19m	150A	Si	DO7
146	1SV87	30			20m	150J	Si$#	DO35
147	1SV97	28			20m	150S	Si$#	DO35
148	1SV113	28			20m	150S	Si$#	A277s
149	1S426	10	2.0m	1.0	20m	75J	GeØ	A1dr
150	GD72E3	25	2.0m	1.0	20m	60A	GeØ	F65
151	GD72E4	25	2.0m	1.0	20m	60A	GeØ	F65
152	GD72E5	25	2.0m	1.0	20m	60A	Ge	F65
153	GD73E3	45	2.0m	1.0	20m	60A	GeØ	F65
154	GD73E4	45	2.0m	1.0	20m	60A	GeØ	F65
155	GD73E5	45	2.0m	1.0	20m	60A	GeØ	F65
156	SFD107	15	4.5m	1.0	20m	85S	GeØ	DO7
157	DD10A	1.0k	10m	6.0	20m	150S	Si	A109b
158	DD20A	2.0k	10m	6.0	20m	150S	Si	A109b
159	DD30A	3.0k	10m	6.0	20m	150S	Si	A109b
160	DD40A	4.0k	10m	6.0	20m	150S	Si	A109b
161	ND10	1.0k	10m	6.0	20m	150S	Si	A83cd
162	ND10A	1.0k	10m	6.0	20m	150S	Si	A83cd
163	ND20	2.0k	10m	6.0	20m	150S	Si	A83cd
164	ND20A	2.0k	10m	6.0	20m	150S	Si	A83cd
165	ND30	3.0k	10m	6.0	20m	150S	Si	A83cd
166	ND30A	3.0k	10m	6.0	20m	150S	Si	A83cd
167	ND40	4.0k	10m	6.0	20m	150S	Si	A83cd
168	ND40A	4.0k	10m	6.0	20m	150S	Si	A83cd
169	1N74	75	15m	1.5	22m	70A	Ge	M4*
170	1N211	56	2.7m	1.0	23m	150A	Si*	C1
171	1N389	56	2.7m	1.0	23m	150A	Si	DO7
172	1N1845	68	2.7m	1.0	23m	150A	Si	C12a
173	1N35	50	7.5m	1.0	23m	75	GeØ	DO7$
174	MC463	200	1.0m	1.0	25m	175A		A2c
175	MT463	200	1.0m	1.0	25m	175A	Si	A60e
176	1T23	20	2.5m	1.0	25m	70	Ge	A1sc
177	1T23G	20	2.5m	1.0	25m	70	GeØ	
178	MC459	200	3.0m	1.0	25m	175A		A2c
179	MC464	150	3.0m	1.0	25m	175A		A2c
180	MT459	200	3.0m	1.0	25m	175A	Si	A60e
181	MT464	150	3.0m	1.0	25m	175A	Si	A60e
182	MC462	70	5.0m	1.0	25m	175A		A2c
183	MT462	70	5.0m	1.0	25m	175A	Si	A60e
184	1N210	47	3.5m	1.0	27m	150A	Si*	C1
185	1N388	47	3.5m	1.0	27m	150A	Si	DO7
186	1N1640	48	11m	1.0	28m	25A	SeØ	M204z
187	1N1641	96	11m	2.0	28m	25A	SeØ	M204z
188	1N1642	144	11m	3.0	28m	25A	SeØ	M204z
189	AA116	20	.10m	.18	30m	75A	Ge	DO7
190	1N60	40	375u	50	30m	100	GeØ	DO7
191	1N302	225	1.0m	1.0	30m	150	SiØ	C3e
192	1N463	230 *	1.0m	1.0	30m	200	Si△	A1bz
193	CT163	150	1.0m	1.0	30m	150	Si	DO35
194♦	DS442	30	1.5m	800m	30m	110	Si#	A1p
195	1N51	46 *	2.5m	1.0	30m	85	GeØ	DO7
196	1N636	50 *	2.5m	1.0	30m	85	GeØ	DO7
197	1N68A	100 $	3.0m	1.0	30m	90	GeØ	DO7
198	1N70	120 *	3.0m	1.0	30m	70	Ge	A1bz
199	1N70A	125 *	3.0m	1.0	30m	90A	GeØ	A9k
200	1N81A	55 *	3.0m	1.0	30m	90	GeØ	A9k
201	1N127	100 $	3.0m	1.0	30m	90	GeØ	DO7
202	1N127A	125 *	3.0m	1.0	30m	90	Ge	DO7
203	1N128	40 $	3.0m	1.0	30m	90	GeØ	A1bz
204	1N128A	40	3.0m	1.0	30m	90S	Ge	DO7
205	1N137A	36	3.0m	1.0	30m	100A	Si	C1h
206	1S448	110	3.0m	1.0	30m	85J	GeØ	DO7
207	1S451	60	3.0m	1.0	30m	85J	GeØ	DO7
208	1N89	80 $	3.5m	1.0	30m	90	GeØ	A1sh
209	1N47	150	4.0m	1.0	30m		Ge	A1sh
210	1N67A	80 $	4.0m	1.0	30m	90	GeØ	A1bz
211	1N198	80 $	4.0m	1.0	30m	90A	GeØ	A1bz
212	1N198A	80	4.0m	1.0	30m	90A	Ge	DO7
213	1S32	75	4.0m	1.0	30m	75J	GeØ	DO7
214	1S33	120	4.0m	1.0	30m	75J	GeØ	DO7
215	1S34	75	4.0m	1.0	30m	75J	GeØ	DO7
216	1S2091	175	4.0m	1.0	30m	150	Si$#	DO35
217	1S2092	125	4.0m	1.0	30m	150	Si$#	DO35
218	1N209	39	4.5m	1.0	30m	150A	Si*	C1
219	1N387	39	4.5m	1.0	30m	150A	Si	DO7
220	1N1844	47	4.5m	1.0	30m	150A	Si	C12a

SYMBOLS AND CODES EXPLAINED IN INTERPRETER

3. GENERAL-PURPOSE DIODES (Cont'd)

IN ORDER OF: (1) PIV (2) IO RATED MAX (3) IF MIN (4) @ VF & (5) TYPE NUMBER

LINE No.	5 TYPE NO.	1 PIV (V)	MINIMUM FORWARD CURRENT 3 IF (A)	4 @VF (V)	2 IO RATED MAX (A)	MAX. TEMP. (°C)	MAT.	DRAWING NO.
1	1N34AS	75	5.0m	1.0	30m	90A	Ø	DO7
2	1N55B	180 *	5.0m	1.0	30m	90	Ge	DO7
3	1N90	60 $	5.0m	1.0	30m	90	GeØ	A1bz
4	1N116	60 $	5.0m	1.0	30m	90	GeØ	A1bz
5	1N126	60 $	5.0m	1.0	30m	90	GeØ	A1sh
6	1N126A	75 *	5.0m	1.0	30m	90	Ge	A1bz
7	1N3160	60	5.0m	1.0	30m	90A	Ge	A1cw
8	SFD108	100	5.0m	1.0	30m	85S	GeØ	DO7
9	1N616	30	8.0m	1.0	30m	75	Ge	A1sh
10	1N95	60 $	10m	1.0	30m	90	GeØ	A1bz
11	1N97	80 $	10m	1.0	30m	90	GeØ	A1bz
12	1N99	80 $	10m	1.0	30m	90	GeØ	A1bz
13	1N117	60 $	10m	1.0	30m	90	GeØ	A1bz
14	1N96	60	20m	1.0	30m	90	GeØ	A1bz
15	1N98	80	20m	1.0	30m	90	GeØ	A1bz
16	1N100	80	20m	1.0	30m	90	GeØ	A1bz
17	1N118	60	20m	1.0	30m	90	GeØ	A1bz
18	1N298A	30	30m	2.0	30m	100S	Ge	DO7
19	3DD10	1.0k	30m	3.0	30m	150S	Si	A109d
20	3DD15	1.5k	30m	3.0	30m	150S	Si	A109d
21	3DD20	2.0k	30m	3.0	30m	150S	Si	A109d
22	3DD25	2.5k	30m	3.0	30m	150S	Si	A109d
23	3DD30	3.0k	30m	3.0	30m	150S	Si	A109d
24	DR464	12	50m	1.0	30m	85A	Ge	DO7
25	1N295	40	375u		35m	100A	GeØ	DO7
26	1N295A	40	375u		35m	100S		DO7
27	1N434	180	2.0m	1.0	35m	150A	Si	C3e
28♦	OA99	115	2.0m	1.0	35m	75S	GeØ	A1wt
29	1N44	115	3.0m	1.0	35m		Ge	A1sh
30	1N45	75	3.0m	1.0	35m		Ge	A1sh
31	1N68	100	3.0m	1.0	35m	100	GeØ	DO7
32	1N297	80	3.5m	1.0	35m	100A	GeØ	DO7
33	1N297A	80	3.5m	1.0	35m	100S	Ge	A1sh
34	1N67	92 *	4.0m	1.0	35m	100	GeØ	DO7
35	1N208	33	5.5m	1.0	35m	150A	Si*	C1
36	1N386	33	5.5m	1.0	35m	150A	Si	DO7
37	2AA119	45	10m	2.2	35m	60A	GeØ	DO7$
38	AA119	45	10m	2.2	35m	60A	GeØ	DO7$
39	OA79	40 *	10m	2.2	35m	60	GeØ	A1gj
40	16P2	50	1.0m	1.0	40m	125A	Si	DO7
41	17P2	30	1.0m	1.0	40m	125A	Si	DO7
42	18P2	10	1.0m	1.0	40m	125A	Si	DO7
43	1N46	60	3.0m	1.0	40m		Ge	A1sh
44	1N81	40	3.0m	1.0	40m	75	Ge	DO7
45	1N303	125	3.0m	1.0	40m	150	SiØ	DO7
46	1N433	145	3.0m	1.0	40m	150A	Si	C3e
47	1N459	200 *	3.0m	1.0	40m	200	SiΔ	A1bz
48	1N464	175 *	3.0m	1.0	40m	200	SiΔ	A1bz
49	1N5210	200	3.0m	1.0	40m	200S	Si	DO35
50	CT159	200	3.0m	1.0	40m	150	Si	DO35
51	CT164	200	3.0m	1.0	40m	150	Si	DO35
52	CT259	200	3.0m	1.0	40m	150	Si	DO35
53	1N57A	80	4.0m	1.0	40m	75A	GeØ	DO7
54	1N43	70 *	5.0m	1.0	40m	75	Ge	A1sh
55	1N61	140 Δ	5.0m	1.0	40m	75	Ge	A1sh
56	1N69	70 *	5.0m	1.0	40m	70	Ge	DO7
57	1N69A	75 *	5.0m	1.0	40m	90	GeØ	A9k
58	1N302A	225	5.0m	1.0	40m	150	SiØ	C3e
59	1S447	75	5.0m	1.0	40m	85J	GeØ	DO7
60	1S449	110	5.0m	1.0	40m	85J	GeØ	DO7
61	1S452	75	5.0m	1.0	40m	85J	GeØ	DO7
62	GD1Q	45	5.0m	1.0	40m	50A	GeØ	A99
63	1N207	27	7.0m	1.0	40m	150A	Si*	C1
64	1N385	27	7.0m	1.0	40m	150A	Si	DO7
65	1N1843	33	7.0m	1.0	40m	150A	Si	C12a
66	1S453	75	7.0m	1.0	40m	85J	GeØ	DO7
67	1N310	100	15m	1.0	40m	90	GeØ	A1sh
68	1N313	100	20m	1.0	40m	90	GeØ	A1sh
69	1N301	70	5.0m	1.0	45m	150	SiØ	C3e
70	1N460	90	5.0m	1.0	45m	150A	Si	C3e
71	1N434A	180	7.0m	1.0	45m	150A	Si	C3e
72	1N206	22	9.0m	1.0	45m	150A	Si*	C1
73	1N384	22	9.0m	1.0	45m	150A	Si	DO7
74	1N776	20	50m	1.0	45m	100S	Ge	DO7
75	1N60A	40			50m	100S	Ge	DO7
76	AA117	90	.10m	.18	50m	75A	Ge	DO7
77	1N87	23	100u	.25	50m	75A	Ge	A1gj
78	1N87A	23	.10m	.25	50m	75A	Ge	DO7
79	1K90	30	2.0m	1.0	50m	70J	GeØ	DO7
80	GD13E	45	2.0m	1.0	50m	70A	GeØ	
81	1N65	80 *	2.5m	1.0	50m	75	Ge	DO7
82	1N75	100 *	2.5m	1.0	50m		Ge	DO7
83	1N113	70 *	2.5m	1.0	50m	75	Ge	A1sh
84	1N114	70 *	2.5m	1.0	50m	75	Ge	A1sh
85	1N115	70 *	2.5m	1.0	50m	75	Ge	A1sh
86	1K110	50	3.0m	1.0	50m	70J	GeØ	DO7
87	1N39	210 Δ	3.0m	1.0	50m	90	Ge	DO7
88	1N59	280 Δ	3.0m	1.0	50m	90	Ge	DO7
89	1N64	25	3.0m	1.0	50m	90A	GeØ	DO7
90	1N476	90	3.0m	1.0	50m	75	Ge	A1sh
91	1N477	90	3.0m	1.0	50m	75	Ge	A1sh
92	1N617	90	3.0m	1.0	50m	75	Ge	A1sh
93	GD2E	90	3.0m	1.0	50m	60A	GeØ	A99
94	GD3E	110	3.0m	1.0	50m	60A	GeØ	A99
95	GD4E	45	3.0m	1.0	50m	60A	GeØ	A99
96	GD6E	45	3.0m	1.0	50m	60A	Ge	A99
97	1K60	40	4.0m	1.0	50m	70J	GeØ	DO7
98	1N38	100	4.0m	1.0	50m	90	Ge	DO7
99	1N38A	115 *	4.0m	1.0	50m	90	Ge	DO7
100	1N38B	125 *	4.0m	1.0	50m	90	GeØ	A9k
101	1N39B	200	4.0m	1.0	50m	90	GeØ	DO7
102	1N48	80 *	4.0m	1.0	50m	75	Ge	DO7
103	1N52	80 *	4.0m	1.0	50m	75	Ge	DO7
104	1N55A	170 *	4.0m	1.0	50m	90	GeØ	A9k
105	1N58	115 *	4.0m	1.0	50m	90	Ge	DO7
106	1N58A	100	4.0m	1.0	50m	90	GeØ	DO7
107	1N63	100	4.0m	1.0	50m	90	GeØ	DO7
108	1N63A	100	4.0m	1.0	50m	90S	Ge	DO7
109	1N86	70	4.0m	1.0	50m	75	Ge	A1sh
110	1N355	80	4.0m	1.0	50m	90	Ge	A1sh
111	1S188	40	4.0m	1.0	50m	75J	GeØ	A1dr
112	BA180	10	4.0m	1.0	50m	175A	Si	A1an
113	BA181	20	4.0m	1.0	50m	175A	Si	A1an
114	1K34A	75	5.0m	1.0	50m	70J	GeØ	DO7
115	1K188	40	5.0m	1.0	50m	70J	GeØ	DO7
116	1N34	60	5.0m	1.0	50m	90	Ge	A1
117	1N34A	60	5.0m	1.0	50m	90	GeØ	A9k
118	1N39A	230 *	5.0m	1.0	50m	75	Ge	DO7
119	1N52A	50	5.0m	1.0	50m	75	GeØ	DO7
120	1N54	50	5.0m	1.0	50m	90	Ge	DO7
121	1N54A	50	5.0m	1.0	50m	90	GeØ	DO7
122	1N60C	50	5.0m	1.0	50m	75	Ge	DO7
123	1N66	60	5.0m	1.0	50m	100	GeØ	A1sh
124	1N66A	60	5.0m	1.0	50m	90S	Ge	DO7
125	1N111	70 *	5.0m	1.0	50m	75	Ge	A1sh
126	1N112	70 *	5.0m	1.0	50m	75	Ge	A1sh
127	1N138A	18	5.0m	1.0	50m	100A	Si	C1h
128	1N294	60	5.0m	1.0	50m	100	GeØ	DO7
129	1N294A	60	5.0m	1.0	50m	100S	Ge	DO7
130	1N462	80 *	5.0m	1.0	50m	200	SiΔ	A1bz
131	1N478	90	5.0m	1.0	50m	75	Ge	A1sh
132	1N479	90	5.0m	1.0	50m	75	Ge	A1sh
133	1N618	90	5.0m	1.0	50m	75	Ge	A1sh
134	1T22G	60	5.0m	1.0	50m	70	GeØ	
135	CT162	70	5.0m	1.0	50m	150	Si	DO35
136	GD1E	45	5.0m	1.0	50m	60A	GeØ	A99
137	GD1P	45	5.0m	1.0	50m	70A	GeØ	A99
138	MC458	150	7.0m	1.0	50m	175A		A2c
139	MT458	150	7.0m	1.0	50m	175A	Si	A60e
140	OA73	20	8.0m	.50	50m	75	Ge	A1gj
141	GD5E	45	8.0m	1.0	50m	60A	GeØ	A99
142	1K261	40	9.0m	1.0	50m	70J	GeØ	DO7
143	HG5079	25	10m	460m	50m	90	GeØ	DO7
144	1S1579	60	10m	870m	50m	125J	Si$#	C101
145	1S1580	35	10m	870m	50m	125J	Si$#	C101
146	1N433A	145	10m	1.0	50m	150A	Si	C3e
147	BA130	30	10m	1.0	50m	125A	Si#	DO7
148	AA132	100	10m	1.3	50m		Ge	A1tn
149	AA133	130	10m	1.3	50m		Ge	A1tn
150	1N205	18	12m	1.0	50m	150A	Si*	C1
151	1N383	18	12m	1.0	50m	150A	Si	DO7
152	1N1842	22	12m	1.0	50m	150A	Si	C12a
153	OA81	115	30m	1.0	50m	75	Ge	A1gj
154	OA85	115	30m	1.0	50m	90	GeØ	A1gj
155	SFD108A	115	30m	1.0	50m	85S	GeØ	DO7
156	1N298	70	30m	2.0	50m	100	GeØ	DO7
157	OA95	115	30m	2.6	50m	75A	GeØ	DO7
158	OA91	115	30m	3.3	50m	75A	GeØ	DO7
159	1S1314	10	50m	1.0	50m	150J	Si#	DO7
160	1N307	125	100m	1.0	50m	70	GeØ	C3e
161	1N771	80	100m	1.0	50m	100S	Ge	DO7
162	1N772	70	100m	1.0	50m	100S	Ge	DO7
163	1N773	65	100m	1.0	50m	100S	Ge	DO7
164	1N774	60	100m	1.0	50m	100S	Ge	DO7
165	1N775	60	100m	1.0	50m	100S	Ge	DO7
166	OA91A	90	3.0	1.0	50m§	75S	Ge	Alaar
167	2-OA90-M	35	4.0	1.0	50m§	75S	Ge	DO7
168	2-OA90A-M	35	4.0	1.0	50m§	75S	Ge	Alaar
169	2-OA99	30	4.0	1.0	50m§	75S	Ge	DO7
170	2-OA99A	30	4.0	1.0	50m§	75S	Ge	Alaar
171	OA90-G	22	4.0	1.0	50m§	75S	Ge	DO7
172	OA90-H	22	4.0	1.0	50m§	75S	Ge	DO7
173	OA90-M	35	4.0	1.0	50m§	75S	Ge	DO7
174	OA90-R	22	4.0	1.0	50m§	75S	Ge	DO7
175	OA90A-G	22	4.0	1.0	50m§	75S	Ge	Allar
176	OA90A-H	22	4.0	1.0	50m§	75S	Ge	Alaar
177	OA90A-M	35	4.0	1.0	50m§	75S	Ge	Alaar
178	OA90A-R	22	4.0	1.0	50m§	75S	Ge	Alaar
179	OA99A	30	4.0	1.0	50m§	75S	Ge	Alaar
180	OA95A	90	5.0	1.0	50m§	75S	Ge	Alaar
181	BD458	150			55m	300S	Si	M765
182	BD458F	150			55m	300S	Si	TO86
183	BD458T	150			55m	300S	Si	TO18
184	1N458	150 *	7.0m	1.0	55m	200	SiΔ	A1bz
185	1N5209	150	7.0m	1.0	55m	200S	Si	DO35
186	CT158	150	7.0m	1.0	55m	150	Si	D035
187	CT258	150	7.0m	1.0	55m	150	Si	DO35
188	1N432	40	10m	1.0	55m	150A	Si	C3e
189	1N303A	125	12m	1.0	55m	150	SiØ	DO7
190	1N302B	225	20m	1.0	55m	150	SiØ	C3e
191	1N204	15	17m	1.0	56m	150A	Si*	C1
192	1N382	15	17m	1.0	56m	150A	Si	DO7
193	1N435	40			60m	75	Ge	M4§
194	1N142	115 *	5.0m	1.0	60m	90A	GeØ	A1sh
195	AA144	100	5.0m	1.0	60m	85S	GeØ	DO7
196	HG5078	50	10m	460m	60m	90	GeØ	DO7
197	19P2	10	10m	1.0	60m	125A	Si	DO7
198	AA143	30	15m	.50	60m	85S	GeØ	DO7
199	1N56	46 *	15m	1.0	60m	90	Ge	DO7
200	1N56A	40	15m	1.0	60m	90	GeØ	DO7
201	1N460A	90	15m	1.0	60m	150A	Si	A60x
202	1N461	35 *	15m	1.0	60m	200	SiΔ	A1bz
203	CT161	30	15m	1.0	60m	150	Si	DO35
204	DR207	86 *	20m	1.0	60m		GeØ	DO7
205	GD8E	25	20m	1.0	60m	60A	GeØ	A99
206	1N447	40 *	25m	1.0	60m	90	Ge	DO7
207	1N448	100	25m	1.0	60m	75	Ge†	DO7
208	DR209	150 *	40m	1.0	60m		GeØ	DO7
209	1N449	40 *	50m	1.0	60m	75	Ge	DO7
210	1N450	100	50m	1.0	60m	75	Ge†	DO7
211	1N451	175 *	50m	1.0	60m	75	Ge	DO7
212	1N203	12	23m	1.0	63m	150A	Si*	C1
213	1N381	12	23m	1.0	63m	150A	Si	DO7
214	1N1841	15	23m	1.0	63m	150A	Si	C12a
215	1N300	15	15m	1.0	65m	150	SiØ	DO7
216	1N301A	70	18m	1.0	65m	150	SiØ	C3e
217	1N303B	125	50m	1.0	65m	150S	Si	C3e
218	1N771A	80	200m	1.0	65m	100S	Ge	DO7
219	1N772A	70	200m	1.0	65m	100S	Ge	DO7
220	1N773A	65	200m	1.0	65m	100S	Ge	DO7

SYMBOLS AND CODES EXPLAINED IN INTERPRETER

3. GENERAL-PURPOSE DIODES (Cont'd)

IN ORDER OF: (1) PIV (2) IO RATED MAX (3) IF MIN (4) @ VF & (5) TYPE NUMBER

LINE No.	5 TYPE NO.	1 PIV (V)	MINIMUM FORWARD CURRENT 3 IF (A)	4 @VF (V)	2 IO RATED MAX (A)	MAX. TEMP. (°C)	MAT.	DRAWING NO.
1	1N774A	60	200m	1.0	65m	100S	Ge	DO7
2	1T22	60	5.0m	1.0	70m		GeØ	A1sc
3	1T26	35	8.0m	1.0	70m		GeØ	A1sc
4	DZ800	2.0	10m	800m	70m	125A	Si	A277h
5	DZ805	15	10m	800m	70m	125A	Si	A277h
6	DZ806	25	10m	800m	70m	125A	Si	A277h
7	1N139	46 *	20m	1.0	70m	80A	GeØ	A1sh
8	1N141	80 *	20m	1.0	70m	90A	GeØ	A1sh
9	1N432A	40	20m	1.0	70m	150A	Si	C3e
10	1N202	10	30m	1.0	70m	150A	Si*	C1
11	1N312	50	30m	1.0	70m	90	GeØ	A1sh
12	1N380	10	30m	1.0	70m	150A	Si	DO7
13	1N96A	60 $	40m	1.0	70m	90A	Ge	A1cw
14	1N98A	80 $	40m	1.0	70m	90A	Ge	A1cw
15	1N100A	80 $	40m	1.0	70m	90A	Ge	A1cw
16	1N118A	60 $	40m	1.0	70m	90A	Ge	A1cw
17	1N502	115 *	100m	.80	70m	90	Ge	DO7
18	1N279	32 △	100m	1.0	70m	90A	GeØ	DO7
19	1N292	70 *	100m	1.0	70m	90A	Ge	DO7
20	BD457	70			75m	300S	Si	M765
21	BD457F	70			75m	300S	Si	TO86
22	BD457T	70			75m	300S	Si	TO18
23	DE110	40	10m	880m	75m	175A	Si#	DO35
24	DE111	50	10m	880m	75m	175A	Si#	DO35
25	DE114	40	10m	880m	75m	175A	Si#	DO35
26	DE115	50	10m	880m	75m	175A	Si#	DO35
27	DE104	40	10m	890m	75m	175A	Si#	DO35
28	BA164	20	10m	1.0	75m	125	Si	DO7
29	1N137B	36	20m	1.0	75m	150A	Si	C12a
30	1N457	70 *	20m	1.0	75m	200	Si△	A21
31	1N457M	80 *	20m	1.0	75m	200	Si△	A2
32	1N5208	70	20m	1.0	75m	200S	Si	DO35
33	CT257	70	20m	1.0	75m	150	Si	DO35
34	1N301B	70	50m	1.0	75m	150S	Si	C3e
35	BA128	75	50m	1.0	75m	125A	Si#	DO7
36	DE112	20	50m	1.0	75m	175A	Si#	DO35
37	DE113	30	50m	1.0	75m	175A	Si#	DO35
38	1N281	75 *	100m	1.0	75m	90	GeØ	DO7
39	1N3465	60	200m	1.0	75m	90	GeØ	DO7
40	1N3466	40	200m	1.0	75m	90	GeØ	DO7
41	1N771B	80	400m	1.0	75m	100S	Ge	DO7
42	CT157	70	20m	1.0	76m	150	Si	DO35
43	1N201	8.2	35m	1.0	77m	150A	Si*	C1
44	1N379	8.2	35m	1.0	77m	150A	Si	DO7
45	1N1840	10	35m	1.0	77m	150A	Si	C12a
46	1N289	80 *	20m	1.0	80m	70	Ge	DO7
47	1N300A	15	30m	1.0	80m	150	SiØ	DO7
48	1N501	92 *	100m	.80	80m	90	Ge	DO7
49	HG5002	70 *	100m	800m	80m	90	GeØ	DO7
50	HG5003	90 *	100m	800m	80m	90	GeØ	DO7
51	HG5004	70 *	100m	800m	80m	90	GeØ	DO7
52	HG5005	90 *	100m	800m	80m	90	GeØ	DO7
53	HG5006	70 *	100m	800m	80m	90	GeØ	DO7
54	HG5007	40 *	100m	800m	80m	90	GeØ	DO7
55	HG5008	40 *	100m	800m	80m	90	GeØ	DO7
56	HG5009	40 *	100m	800m	80m	90	GeØ	DO7
57	1N273	32 △	100m	1.0	80m	90A	GeØ	DO7
58	1N497	25 *	100m	1.0	80m	85	Ge†	DO7
59	1N498	46 *	100m	1.0	80m	85	Ge†	DO7
60	1N499	62 *	100m	1.0	80m	85	Ge†	DO7
61	1N500	70 *	100m	1.0	80m	85	Ge†	DO7
62	1N3865	80	100m	1.0	80m	90A	Ge	DO7
63	DR213	86 *	100m	1.0	80m		GeØ	DO7
64	DR310	175 *	100m	1.0	80m		GeØ	DO7
65	DR312	150 *	100m	1.0	80m		GeØ	DO7
66	DR313	115 *	100m	1.0	80m		GeØ	DO7
67	DR314	80	100m	1.0	80m		GeØ	DO7
68	DR323	115 *	100m	1.0	80m		GeØ	DO7
69	DR324	115 *	100m	1.0	80m		GeØ	DO7
70	DR325	150 *	100m	1.0	80m		GeØ	DO7
71	DR326	86 *	100m	1.0	80m		GeØ	DO7
72	1N140	80 *	40m	1.0	85m	80A	GeØ	A1sh
73	1N143	115 *	40m	1.0	85m	90A	GeØ	A1sh
74	1N200	6.8	50m	1.0	85m	150A	Si*	C1
75	1N1839	6.8	50m	1.0	85m	150A	Si	C12a
76	1N3469	35	600m	1.0	85m	90	Ge	DO7
77	1N3470	35	600m	1.0	85m	90	Ge	DO7
78	1N456	25 $	40m	1.0	90m	200	Si	A1bz
79	CT156	30	40m	1.0	90m	150	Si	DO35
80	CT256	30	40m	1.0	90m	150	Si	DO35
81	1SS135	20			100m	150J	Si$#	DO34
82	1SS152(A)	-35			100m	60A	Si$#	DO34
83	BD483B	70			100m	300S	Si	M765
84	BD483BF	70			100m	300S	Si	TO86
85	BD483BT	70			100m	300S	Si	TO18
86	ISV121	100 $			100m	175J	Si#$	
87♦	KD518A	30	1.0m	61m	100m	85A	$#	M926
88	BAY73	125	1.0m	680m	100m	175J	Si#$	DO35
89	SD455	5.0	2.0m	200m	100m		Ge	TO5
90	DR352	58 *	10m	.35	100m		GeØ	DO7
91	DR385	50	10m	.37	100m	85A	Ge	DO7
92	DR435	20	10m	.37	100m	85A	Ge	DO7
93	1SS110	35	10m	1.0	100m	60A	Si$#	A277s
94	1SS150(A)	35	10m	1.0	100m	125S	Si	DO35
95	1SS168(A)	35	10m	1.0	100m	125S	Si	DO35
96	PS4725	60	10m	1.0	100m	150A	Si△	A1
97	SD160	60	10m	1.0	100m	150J	Si#	M901
98	OA72	45 *	10m	1.5	.10		Ge	A1gj
99	1N314	75	15m	1.0	100m	125	Ge	DO7
100	MC461	30	15m	1.0	100m	175A		A2c
101	MT461	30	15m	1.0	100m	175A	Si	A60e
102	1N890	60	20m	1.0	100m	150A	Si*	A1bz
103	MC457	70	20m	1.0	100m	175A		A2c
104	MC890	80	20m	1.0	.10	175A		A2c
105	MT457	70	20m	1.0	100m	175A	Si	A60e
106	MT890	80	20m	1.0	100m	175A	Si	A60e
107	MD50	50	30m	1.0	100m		Si	C202
108	1N300B	15	50m	1.0	100m	150S	Si	C3e
109	1N634	125 *	50m	1.0	100m	75	Ge	DO7
110	CT21	20	50m	1.0	100m	150	Si	DO35

LINE No.	5 TYPE NO.	1 PIV (V)	MINIMUM FORWARD CURRENT 3 IF (A)	4 @VF (V)	2 IO RATED MAX (A)	MAX. TEMP. (°C)	MAT.	DRAWING NO.
111	CT22	50	50m	1.0	100m	150	Si	DO35
112	CT23	100	50m	1.0	100m	150	Si	DO35
113	CT24	150	50m	1.0	100m	150	Si	DO35
114	CT31	20	50m	1.0	100m	150	Si	DO35
115	CT32	50	50m	1.0	100m	150	Si	DO35
116	CT33	100	50m	1.0	100m	150	Si	DO35
117	CT34	150	50m	1.0	100m	150	Si	DO35
118	DR699	300 *	50m	1.0	100m		Si	DO7
119	1N309	30	100m	1.0	100m	90	GeØ	A1sh
120	1N909	50	100m	1.0	100m	90A	Ge	DO7
121	1N910	30	100m	1.0	100m	90A	Ge	DO7
122	1N911	20	100m	1.0	100m	90A	Ge	DO7
123	ITT3001	70	100m	1.0	100m	175A	Si$#	DO35
124	ITT3003	200	100m	1.0	100m	175A	Si#$	DO35
125	MC130	1.3k	.10	1.0	.10	175A	Si	A2t
126	MC130A	1.3k	.10	1.0	.10	175A	Si	A2t
127	MC130AS	1.3k	.10	1.0	.10	175A	Si	A1cy
128	MC130S	1.3k	.10	1.0	.10	175A	Si	A1cy
129	MC140	1.4k	.10	1.0	.10	175A	Si	A2t
130	MC140A	1.4k	.10	1.0	.10	175A	Si	A2t
131	MC140AS	1.4k	.10	1.0	.10	175A	Si	A1cy
132	MC140S	1.4k	.10	1.0	.10	175A	Si	A1cy
133	MC150	1.5k	.10	1.0	.10	175A	Si	A2t
134	MC150A	1.5k	.10	1.0	.10	175A	Si	A2t
135	MC150AS	1.5k	.10	1.0	.10	175A	Si	A1cy
136	MC150S	1.5k	.10	1.0	.10	175A	Si	A1cy
137	MD234	40	100m	1.0	100m	175J	Si#$	DO35
138	MD235	60	100m	1.0	100m	175J	Si#$	DO35
139	MD236	125	100m	1.0	100m	175J	Si#$	DO35
140	MD237	250	100m	1.0	100m	175J	Si#$	DO35
141	MD238	320	100m	1.0	100m	175J	Si#$	DO35
142	WG713	35	100m	1.0	100m		Si	Do35
143	1N482	36	100m	1.1	100m	200A	Si	DO7
144	1N483	70	100m	1.1	100m	200A	Si	A1cw
145	1N484	130	100m	1.1	100m	200A	Si	DO7
146	1N485	180	100m	1.1	100m	200A	Si	DO7
147	1N486	225	100m	1.1	100m	200A	Si	DO7
148	1N487	300	100m	1.1	100m	200A	Si	DO7
149	1N488	380	100m	1.1	100m	200A	Si	DO7
150	CT182	40	100m	1.1	100m	150	Si	DO35
151	CT183	80	100m	1.1	100m	150	Si	DO35
152	CT184	150	100m	1.1	100m	150	Si	DO35
153	CT185	200	100m	1.1	100m	150	Si	DO35
154	CT186	250	100m	1.1	100m	150	Si	DO35
155	BA182	35	100m	1.2	100m	100J	Si#	M501
156	BAT18	35	100m	1.2	100m		Si#	M500c
157	1S1553	70	100m	1.4	100m	150J	Si$#	DO35
158	1S1554	55	100m	1.4	100m	150J	Si$#	DO35
159	1S1555	35	100m	1.4	100m	150J	Si$#	DO35
160	X60F	6.0k	100m	13	100m	150A	Si	Alabb
161	X60S	6.0k	100m	13	100m	150A	Si	Alabb
162	X80F	8.0k	100m	13	100m	150A	Si	Alabb
163	X80S	8.0k	100m	13	100m	150A	Si	Alabb
164	X100F	10k	100m	13	100m	150A	Si	Alabb
165	X100S	10k	100m	13	100m	150A	Si	Alabb
166	X60UF	6.0k	100m	14	100m	150A	Si	A1abb
167	X80UF	8.0k	100m	14	100m	150A	Si	A1abb
168	X100UF	10k	100m	14	100m	150A	Si	A1abb
169	1N107	10	150m	1.0	100m	90	GeØ	DO7
170	DR304	220 *	200m	1.0	100m		GeØ	DO7
171	DR305	150 *	200m	1.0	100m		GeØ	DO7
172	DR306	115 *	200m	1.0	100m		GeØ	DO7
173	DR307	86 *	200m	1.0	100m		GeØ	DO7
174	DR308	115 *	200m	1.0	100m		Ge†	DO7
175	DR321	150 *	200m	1.0	100m		GeØ	DO7
176	DR351	58 *	200m	1.0	100m		GeØ	DO7
177	DR379	150 *	200m	1.0	100m		GeØ	DO7
178	DR389	86 *	200m	1.0	100m		GeØ	DO7
179	ITT3002	150	200m	1.0	100m	175A	Si#$	DO35
180	1SS53	35	300m		100m			DO35
181	1SS54	75	300m		100m			DO35
182	1SS55	100	300m		100m			DO35
183	1N308	8.0	300m	1.0	100m	90	GeØ	DO7
184	DR327	150 *	300m	1.0	100m		GeØ	DO7
185	DR328	115 *	300m	1.0	100m		GeØ	DO7
186	DR329	86 *	300m	1.0	100m		GeØ	DO7
187	DR330	80	300m	1.0	100m		GeØ	DO7
188	DR463	80 *	300m	1.0	100m		GeØ	DO7
189	DR272	175 *	400m	1.0	100m		GeØ	DO7
190	DR302	115 *	400m	1.0	100m		GeØ	DO7
191	DR303	86 *	400m	1.0	100m		GeØ	DO7
192	DR309	115 *	400m	1.0	100m		GeØ	DO7
193	1SS104	35	100m	1.3	120m	175J	Si$#	A60g
194	1N214	100	1.2m	1.0	125m	150A	Si*	C1
195	1N392	100	1.2m	1.0	125m	150A	Si	DO7
196	1N305	60	100m	.80	125m	70	GeØ	A1sh
197	DS442X	55	1.5m	.65	130m	175J	Si$	A277
198	BD3595	125			150m	300S	Si	M765
199	BD3595F	125			150m	300S	Si	TO86
200	BD3595T	125			150m	300S	Si	TO18
201	BAS32	75	5.0m	0.6	150m	200J	Si	F135
202	1N635	175 *	50m	1.0	150m	75	Ge	DO7
203	BA129	200	50m	1.0	150m	125A	Si#	DO7
204	C5D459CA	200	50m	1.0	150m	150S		M713a
205	C5D459CC	200	50m	1.0	150m	150S		M713a
206	FJT1100	30 *	50m	1.0	150m	175J	Si△#	DO7
207	FJT1101	15 $	50m	1.1	150m	200S	Si△	DO7
208	SH200	12	50m	1.2	150m		Si	TO106
209	SH200A	12	50m	1.2	150m		Si	TO106
210	SH202	20	50m	1.2	150m		Si	TO106
211	SH202A	20	50m	1.2	150m		Si	TO106
212	SH212	40	50m	1.2	150m		Si	TO106
213	SH212A	40	50m	1.2	150m		Si	TO106
214	SH222	60	50m	1.2	150m		Si	TO106
215	SH222A	60	50m	1.2	150m		Si	TO106
216	SH242	100	50m	1.2	150m		Si	TO106
217	SH242A	100	50m	1.2	150m		Si	TO106
218	SH252	150	50m	1.2	150m		Si	TO106
219	SH252A	150	50m	1.2	150m		Si	TO106
220	BA170	20	80m	1.0	150m	150	Si	DO35

SYMBOLS AND CODES EXPLAINED IN INTERPRETER

3. GENERAL-PURPOSE DIODES (Cont'd)

IN ORDER OF: (1) PIV (2) IO RATED MAX (3) IF MIN (4) @ VF & (5) TYPE NUMBER

LINE No.	5 TYPE NO.	1 PIV (V)	MINIMUM FORWARD CURRENT 3 IF (A)	4 @VF (V)	2 IO RATED MAX (A)	MAX. TEMP. (°C)	MAT.	DRAWING NO.
1	CD13334	160	80m	1.0	.15	200S	Si	A1cj
2	AA135	20	100m	550m	150m		Ge	A1tn
3	1N306	15	100m	.80	150m	70	GeØ	DO7
4	1N144	35 *	100m	1.0	150m	80A	GeØ	A1sh
5	1N3575	60	100m	1.0	150m	150A	Si	A31g
6	1N3576	125	100m	1.0	150m	150A	Si	A31g
7	1N3577	175	100m	1.0	150m	150A	Si	A31g
8	1N3578	225	100m	1.0	150m	150A	Si	A31g
9	1N3579	275	100m	1.0	150m	150A	Si	A31g
10	MC60	80	.10	1.0	.15			u4a
11	MC61	150	.10	1.0	.15			u4a
12	MC456A	30	100m	1.0	150m	175A		A2c
13	MC457A	70	100m	1.0	150m	175A		A2c
14	MC458A	150	.10	1.0	.15	175A		A2c
15	MC459A	200	.10	1.0	.15	175A		A2c
16	MC461A	30	100m	1.0	150m	175A	Si	A2g
17	MC462A	70	100m	1.0	150m	175A	Si	A2g
18	MC463A	200	100m	1.0	150m	175A	Si	A2g
19	MC464A	150	100m	1.0	150m	175A	Si	A2g
20	MC482A	40	100m	1.0	150m	175A		A2a
21	MC482B	40	100m	1.0	150m	175A	Si	A2g
22	MC483A	80	.10	1.0	.15	175A		A2c
23	MC483B	80	100m	1.0	150m	175A	Si	A2g
24	MC484A	150	.10	1.0	.15	175A		A2c
25	MC484B	150	100m	1.0	150m	175A	Si	A2g
26	MC485A	200	.10	1.0	.15	175A		A2c
27	MC485B	200	100m	1.0	150m	175A	Si	A2g
28	MC486A	250	.10	1.0	.15	175A		A2c
29	MC486B	250	100m	1.0	150m	175A	Si	A2g
30	MC487A	330	100m	1.0	150m	175A		A2c
31	MC487B	330	.10	1.0	.15	175A		A2c
32	MC488A	410	100m	1.0	150m	175A		A2c
33	MC488B	410	.10	1.0	.15	175A		A2c
34	MT456A	30	100m	1.0	150m	175A	Si	A60e
35	MT457A	70	100m	1.0	150m	175A	Si	A60e
36	MT458A	150	.10	1.0	.15	175A	Si	A60e
37	MT459A	200	.10	1.0	.15	175A	Si	A60e
38	MT461A	30	100m	1.0	150m	175A	Si	A60e
39	MT462A	70	100m	1.0	150m	175A	Si	A60e
40	MT463A	200	100m	1.0	150m	175A	Si	A60e
41	MT464A	150	100m	1.0	150m	175A	Si	A60e
42	MT482A	40	100m	1.0	150m	175A	Si	A60e
43	MT482B	40	100m	1.0	150m	175A	Si	A60e
44	MT483A	80	.10	1.0	.15	175A	Si	A60e
45	MT483B	80	.10	1.0	.15	175A	Si	A60e
46	MT484A	150	.10	1.0	.15	175A	Si	A60e
47	MT484B	150	.10	1.0	.15	175A	Si	A60e
48	MT485A	200	.10	1.0	.15	175A	Si	A60e
49	MT485B	200	.10	1.0	.15	175A	Si	A60e
50	MT486A	250	.10	1.0	.15	175A	Si	A60e
51	MT486B	250	.10	1.0	.15	175A	Si	A60e
52	MC482	40	100m	1.1	150m	175A		A2c
53	MC483	80	100m	1.1	150m	175A		A2c
54	MC484	150	100m	1.1	150m	175A		A2c
55	MC485	200	100m	1.1	150m	175A		A2c
56	MC486	250	100m	1.1	150m	175A		A2c
57	MC487	330	100m	1.1	150m	175A		A2c
58	MC488	410	100m	1.1	150m	175A		A2c
59	MT482	40	100m	1.1	150m	175A	Si	A60e
60	MT483	80	100m	1.1	150m	175A	Si	A60e
61	MT484	150	100m	1.1	150m	175A	Si	A60e
62	MT485	200	100m	1.1	150m	175A	Si	A60e
63	MT486	250	100m	1.1	150m	175A	Si	A60e
64	X30F	3.0k	100m	8.0	150m	150A	Si	Alabb
65	X30S	3.0k	100m	8.0	150m	150A	Si	Alabb
66	X40F	4.0k	100m	8.0	150m	150A	Si	Alabb
67	X40S	4.0k	100m	8.0	150m	150A	Si	Alabb
68	X50F	5.0k	100m	8.0	150m	150A	Si	Alabb
69	X50S	5.0k	100m	8.0	150m	150A	Si	Alabb
70	X30UF	3.0k	100m	9.0	150m	150A	Si	A1abb
71	X40UF	4.0k	100m	9.0	150m	150A	Si	A1abb
72	X50UF	5.0k	100m	9.0	150m	150A	Si	A1abb
73	1N3595	150 *	200m	1.0	150m	175A	Si#	DO7
74	FD300	125 $	200m	1.0	150m	175A	SiΔ#	DO7
75	FD333	125 $	300m	1.1	150m	175A	SiΔ#	DO7
76	CD13333	160	.10	1.0	175m	200S	Si	A1cj
77	CD13336	160	.10	1.0	175m	200S	Si	A1cj
78	CD13338	160	.10	1.0	175m	200S	Si	A1cj
79	CD13339	160	.20	1.0	175m	200S	Si	A1cj
80	1A12/18	10			200m	175J	Si▼	TO18
81	1A22/18	10			200m	175J	Si▼	TO18
82	1A52/18	10			200m	175J	Si▼	TO18
83	1B12/18	10			200m	175J	Si▼	TO18
84	1B22/18	10			200m	175J	Si▼	TO18
85	1B52/18	25			200m	175J	Si▼	TO18
86	2A12/18	25			200m	175J	Si▼	TO18
87	2A22/18	25			200m	175J	Si▼	TO18
88	2A52/18	25			200m	175J	Si▼	TO18
89	2B12/18	25			200m	175J	Si▼	TO18
90	2B22/18	25			200m	175J	Si▼	TO18
91	2B52/18	25			200m	175J	Si▼	TO18
92	5A12/18	50			200m	175J	Si▼	TO18
93	5A22/18	50			200m	175J	Si▼	TO18
94	5A52/18	50			200m	175J	Si▼	TO18
95	5B12/18	50			200m	175J	Si▼	TO18
96	5B22/18	50			200m	175J	Si▼	TO18
97	5B52/18	50			200m	175J	Si▼	TO18
98	7A12/18	75			200m	175J	Si▼	TO18
99	7A22/18	75			200m	175J	Si▼	TO18
100	7A52/18	75			200m	175J	Si▼	TO18
101	7B12/18	75			200m	175J	Si▼	TO18
102	7B22/18	75			200m	175J	Si▼	TO18
103	7B52/18	75			200m	175J	Si▼	TO18
104	10A12/18	100			200m	175J	Si▼	TO18
105	10A22/18	100			200m	175J	Si▼	TO18
106	10A52/18	100			200m	175J	Si▼	TO18
107	10B12/18	100			200m	175J	Si▼	TO18
108	10B22/18	100			200m	175J	Si▼	TO18
109	10B52/18	100			200m	175J	Si▼	TO18
110	BAT86	50	100u	330m	200m	125J	Si	DO34
111▼	SD50#B	50	100u	800m	200m	125J	Si	M1234
112	AA139	20	.50m	10	200m	90J	Ge	DO7
113	DA1701	100	1.0m	650m	200m	175A	Si$	DO35
114	DA1702	75	1.0m	.65	200m	175A	Si$	DO35
115	DA1703	40	1.0m	.65	200m	175A	Si$	DO35
116	DA1704	25	1.0m	.68	200m	175A	Si$	DO35
117	DS446	105	1.5m	.65	200m	175J	Si$	A277
118	MC51#B	300	30m	900m	200m	150A	SiΔ	DO7
119	SH300	50	50m	1.0	200m		Si	A69a†
120	SH300A	50	50m	1.0	200m		Si	A69a†
121	SH301	100	50m	1.0	200m		Si	A69a†
122	SH301A	100	50m	1.0	200m		Si	A69a†
123	SH302	200	50m	1.0	200m		Si	A69a†
124	SH302A	200	50m	1.0	200m		Si	A69a†
125	1N456A	30 *	100m	1.0	200m	200	Si	A60x
126	1N457A	70 *	100m	1.0	200m	200	Si	A60x
127	1N458A	150 *	.10	1.0	.20	200	Si	A60x
128	1N459A	200 *	.10	1.0	.20	200	Si	A60x
129	1N461A	30 *	100m	1.0	200m	200	Si	A60x
130	1N462A	70 *	100m	1.0	200m	200	Si	A60x
131	1N463A	200 *	100m	1.0	200m	200	Si	A60x
132	1N464A	150 *	100m	1.0	200m	200	Si	A60x
133	1N482A	36	100m	1.0	200m	200A	Si	DO7
134	1N482B	36	100m	1.0	200m	200A	Si	DO7
135	1N483A	70	100m	1.0	200m	200A	Si	A1cw
136	1N483B	80 *	.10	1.0	.20	200A	Si	A1cw
137	1N484A	130	.10	1.0	.20	200A	Si	DO7
138	1N484B	130	.10	1.0	.20	200A	Si	DO7
139	1N485A	180	.10	1.0	.20	200A	Si	DO7
140	1N485B	200 *	.10	1.0	.20	200A	Si	A1cw
141	1N486A	225	100m	1.0	200m	200A	Si	DO7
142	1N486B	250 *	100m	1.0	200m	200A	Si	A1cw
143	1N487A	300	100m	1.0	200m	200A	Si	DO7
144	1N487B	300 $	100m	1.0	200m	200A	Si	A1cw
145	1N488A	380	100m	1.0	200m	200A	Si	DO7
146	1N488B	380 $	100m	1.0	200m	200A	Si	A1cw
147	1N5194	80	.10	1.0	.20	200S	Si	DO35
148	1N5195	200	.10	1.0	.20	200S	Si	DO35
149	1N5196	250	.10	1.0	.20	200S	Si	DO35
150	CT26	20	100m	1.0	200m	150	Si	DO35
151	CT27	50	100m	1.0	200m	150	Si	DO35
152	CT28	100	100m	1.0	200m	150	Si	DO35
153	CT29	150	100m	1.0	200m	150	Si	DO35
154	CT36	20	100m	1.0	200m	150	Si	DO35
155	CT37	50	100m	1.0	200m	150	Si	DO35
156	CT38	100	100m	1.0	200m	150	Si	DO35
157	CT39	150	100m	1.0	200m	150	Si	DO35
158	CT282	40	100m	1.0	200m	150	Si	DO35
159	CT283	80	100m	1.0	200m	150	Si	DO35
160	CT284	150	100m	1.0	200m	150	Si	DO35
161	CT285	200	100m	1.0	200m	150	Si	DO35
162	CT286	250	100m	1.0	200m	150	Si	DO35
163	PS4559	60	100m	1.0	200m	150A	Si*	A1
164	C5D485	200	100m	1.1	200m	150S		M713a
165	C5D485CC	200	100m	1.1	200m	150S		M713a
166	VSH200A	12	100m	1.2	200m		Si	TO106
167	VSH202A	20	100m	1.2	200m		Si	TO106
168	VSH212A	40	100m	1.2	200m		Si	TO106
169	VSH222A	60	100m	1.2	200m		Si	TO106
170	VSH242A	100	100m	1.2	200m		Si	TO106
171	VSH252A	150	100m	1.2	200m		Si	TO106
172	JKV8	8.0k	100m	10	200m	110A		A432
173	JKV10	10k	100m	12	200m	110A		A432
174	JKV12	12k	100m	13	200m	110A		A432
175	1SV68	30	200m#		200m	150J	Si$#	DO35
176	BAS27	300	200m		200m	150J	Si	M500
177	1S130	50	200m	1.0	200m	100A	Si	A1
178	1S131	100	200m	1.0	200m	100A	Si	A1
179	1S132	200	200m	1.0	200m	100A	Si	A1
180	1S134	400	200m	1.0	200m	100A	Si	A1
181	1S136	600	200m	1.0	200m	100A	Si	A1
182	1S138	800	200m	1.0	200m	100A	Si	A1
183	FDH300	125 $	200m	1.0	200m	175J	SiΔ#	DO35
184	FDH400	175 $	200m	1.0	200m	175J	SiΔ#	DO35
185	MC080	800	200m	1.0	200m	175A	Si	A2c
186	MC080A	800	200m	1.0	200m	175A	Si	A2c
187	MC100	1.0k	.20	1.0	.20	175A	Si	A2c
188	MC100A	1.0k	.20	1.0	.20	175A	Si	A2c
189	MC110	1.1k	.20	1.0	.20	175A	Si	A2c
190	MC110A	1.1k	.20	1.0	.20	175A	Si	A2c
191	MC110AS	1.1k	.20	1.0	.20	175A	Si	A1cy
192	MC110S	1.1k	.20	1.0	.20	175A	Si	A1cy
193	MC120	1.2k	.20	1.0	.20	175A	Si	A2t
194	MC120A	1.2k	.20	1.0	.20	175A	Si	A2t
195	MC120AS	1.2k	.20	1.0	.20	175A	Si	A1cy
196	MC120S	1.2k	.20	1.0	.20	175A	Si	A1cy
197	MC170	150	.20	1.0	.20	175A	Si	A2c
198	MC678	230	200m	1.0	200m	175A		A2c
199	MT170	150	.20	1.0	.20	175A	Si	A60e
200	FDH444	125 $	200m	1.1	200m	175J	SiΔ#	DO35
201	1S920	50	200m	1.2	200m	175A	Si	A60b
202	1S921	100	200m	1.2	200m	175A	Si	A60b
203	1S922	150	200m	1.2	200m	175A	Si	A60b
204	1S923	200	200m	1.2	200m	175A	Si	A60b
205	FDH333	125 $	300m	1.1	200m	175J	SiΔ#	DO35
206	MC020	200	400m	1.0	200m	175A	Si	A2c
207	MC020A	200	.40	1.0	.20	175A	Si	A2c
208	MC021	50	400m	1.0	200m	175A	Si	A2c
209	MC021A	50	400m	1.0	200m	175A	Si	A2c
210	MC022	100	400m	1.0	200m	175A	Si	A2c
211	MC022A	100	.40	1.0	.20	175A	Si	A2c
212	MC023	150	400m	1.0	200m	175	Si	A2c
213	MC030	300	400m	1.0	200m	175A	Si	A2c
214	MC030A	300	400m	1.0	200m	175A	Si	A2c
215	MC040	400	400m	1.0	200m	175A	Si	A2c
216	MC040A	400	.40	1.0	.20	175A	Si	A2c
217	MC050	500	400m	1.0	200m	175A	Si	A2c
218	MC050A	500	.40	1.0	.20	175A	Si	A2c
219	MC060	600	400m	1.0	200m	175A	Si	A2c
220	MC060A	600	.40	1.0	.20	175A	Si	A2c

SYMBOLS AND CODES EXPLAINED IN INTERPRETER

3. GENERAL-PURPOSE DIODES (Cont'd)

IN ORDER OF: (1) PIV (2) IO RATED MAX (3) IF MIN (4) @ VF & (5) TYPE NUMBER

LINE No.	5 TYPE NO.	1 PIV (V)	MINIMUM FORWARD CURRENT 3 IF (A)	4 @VF (V)	2 IO RATED MAX (A)	MAX. TEMP. (°C)	MAT.	DRAWING NO.
1	MC070	700	400m	1.0	200m	175A	Si	A2c
2	MC070A	700	.40	1.0	.20	175A	Si	A2c
3	1N3728	400	400m	1.2	200m	200J	Si	A1bz
4	FDH1000	50 $	500m	1.0	200m	175J	Si△#	DO35
5	1N40	25	12m	1.5	225m	75	Ge∅	DO7§
6	BAS45	125	200m	1.0	225m	125J		DO34
7	BAS28	75	1.0m	0.7	250m	175J	Si#$	M1281
8	BAS29	90	10m	0.7	250m	150J	Si	M500d
9	BAS31	90	10m	0.7	250m	150J	Si	M500a
10	BAS35	90	10m	0.7	250m	150J	Si	M500b
11	1N929	23 *	20m	1.0	250m		Si	DO7
12	1N930	58 *	20m	1.0	250m		Si	DO7
13	1N931	115 *	20m	1.0	250m		Si	DO7
14	1N932	230 *	20m	1.0	250m		Si	DO7
15	MC456	30	40m	1.0	250m	175A	Si	A2c
16	MT5050	500	60m	1.0	250m	175A	Si	DO34
17	MT5051	500	60m	1.0	250m	175A	Si	DO34
18	MT5010	100	80m	1.0	250m	175A	Si	DO34
19	MT5011	100	80m	1.0	250m	175A	Si	DO34
20	MT5100	20	100m	1.2	250m	175A	Si	DO34
21	MT5101	20	100m	1.2	250m	175A	Si	DO34
22	MT5102	20	100m	1.2	250m	175A	Si	DO34
23	MT5103	20	100m	1.2	250m	175A	Si	DO34
24	X15F	1.5	100m	6.0	250m	150A	Si	Alabb
25	X15S	1.5k	100m	6.0	250m	150A	Si	Alabb
26	X20F	2.0k	100m	6.0	250m	150A	Si	Alabb
27	X20S	2.0k	100m	6.0	250m	150A	Si	Alabb
28	X25F	2.5k	100m	6.0	250m	150A	Si	Alabb
29	X25S	2.5k	100m	6.0	250m	150A	Si	Alabb
30	X15UF	1.5k	100m	7.0	250m	150A	Si	A1abb
31	X20UF	2.0k	100m	7.0	250m	150A	Si	A1abb
32	X25UF	2.5k	100m	7.0	250m	150A	Si	A1abb
33	DT230H	250	200m	1.0	250m	200	Si	DO35
34	FD400	150	200m	1.0	250m	175J	Si#$	DO7
35	SM205A	50	200m	1.5	250m		Si	TO18
36	SM210A	100	200m	1.5	250m		Si	TO18
37	SM215A	150	200m	1.5	250m		Si	TO18
38	BS9301F019-8308	60	250m	900m	250m	100A	Si	DO15
39	BS9301F019-8805	150	250m	900m	250m	100A	Si	DO15
40	ZS120	50	250m	1.1	250m	100A	Si△	DO7
41	ZS121	100	250m	1.1	250m	100A	Si△	DO7
42	ZS122	200	250m	1.1	250m	100A	Si△	DO7
43	ZS123	300	250m	1.1	250m	100A	Si△	DO7
44	ZS124	400	250m	1.1	250m	100A	Si△	DO7
45	DT230A	100	250	1.1	250m	200	Si	DO35
46	DT230B	200	250	1.1	250m	200	Si	DO35
47	DT230F	50	250	1.1	250m	200	Si	DO35
48	DT230G	150	250	1.1	250m	200	Si	DO35
49	DT230H1	250	250	1.1	250m	200	Si	DO35
50	1A13/18	10			300m	175J	Si▾	TO18
51	1A23/18	10			300m	175J	Si▾	TO18
52	1A53/18	10			300m	175J	Si▾	TO18
53	1B13/18	10			300m	175J	Si▾	TO18
54	1B23/18	10			300m	175J	Si▾	TO18
55	1B53/18	25			300m	175J	Si▾	TO18
56	2A13/18	25			300m	175J	Si▾	TO18
57	2A23/18	25			300m	175J	Si▾	TO18
58	2A53/18	25			300m	175J	Si▾	TO18
59	2B13/18	25			300m	175J	Si▾	TO18
60	2B23/18	25			300m	175J	Si▾	TO18
61	2B53/18	25			300m	175J	Si▾	TO18
62	5A13/18	50			300m	175J	Si▾	TO18
63	5A23/18	50			300m	175J	Si▾	TO18
64	5A53/18	50			300m	175J	Si▾	TO18
65	5B13/18	50			300m	175J	Si▾	TO18
66	5B23/18	50			300m	175J	Si▾	TO18
67	5B53/18	50			300m	175J	Si▾	TO18
68	7A13/18	75			300m	175J	Si▾	TO18
69	7A23/18	75			300m	175J	Si▾	TO18
70	7A53/18	75			300m	175J	Si▾	TO18
71	7B13/18	75			300m	175J	Si▾	TO18
72	7B23/18	75			300m	175J	Si▾	TO18
73	7B53/18	75			300m	175J	Si▾	TO18
74	10A13/18	100			300m	175J	Si▾	TO18
75	10A23/18	100			300m	175J	Si▾	TO18
76	10A53/18	100			300m	175J	Si▾	TO18
77	10B13/18	100			300m	175J	Si▾	TO18
78	10B23/18	100			300m	175J	Si▾	TO18
79	10B53/18	100			300m	175J	Si▾	TO18
80	1N268	30	2.5m	1.0	300m	85	Ge	A1sh
81	BA145	300	100m	1.0	300m	125J	Si△	DO14
82	HVR3B	8.0k	.35	12	.35	110S		M1182
83	HVR3H	8.0k	.35	12	.35	130S		A83dd
84	BAX18	75	2.0	2.0	350m	200J	Si△	DO35
85	1A14/18	10			400m	175J	Si▾	TO18
86	1A24/18	10			400m	175J	Si▾	TO18
87	1A54/18	10			400m	175J	Si▾	TO18
88	1B14/18	10			400m	175J	Si▾	TO18
89	1B24/18	10			400m	175J	Si▾	TO18
90	1B54/18	25			400m	175J	Si▾	TO18
91	2A14/18	25			400m	175J	Si▾	TO18
92	2A24/18	25			400m	175J	Si▾	TO18
93	2A54/18	25			400m	175J	Si▾	TO18
94	2B14/18	25			400m	175J	Si▾	TO18
95	2B24/18	25			400m	175J	Si▾	TO18
96	2B54/18	25			400m	175J	Si△	TO18
97	2C14/18	25			400m	175J	Si▾	TO18
98	2C24/18	25			400m	175J	Si▾	TO18
99	2C054/18	25			400m	175J	Si▾	TO18
100	5A14/18	50			400m	175J	Si▾	TO18
101	5A24/18	50			400m	175J	Si▾	TO18
102	5A54/18	50			400m	175J	Si▾	TO18
103	5B14/18	50			400m	175J	Si▾	TO18
104	5B24/18	50			400m	175J	Si▾	TO18
105	5B54/18	50			400m	175J	Si▾	TO18
106	5C14/18	50			400m	175J	Si▾	TO18
107	5C24/18	50			400m	175J	Si▾	TO18
108	5C054/18	50			400m	175J	Si▾	TO18
109	7A14/18	75			400m	175J	Si▾	TO18
110	7A24/18	75			400m	175J	Si▾	TO18
111	7A54/18	75			400m	175J	Si▾	TO18
112	7A55/18	75			400m	175J	Si▾	TO18
113	7B14/18	75			400m	175J	Si▾	TO18
114	7B24/18	75			400m	175J	Si▾	TO18
115	7B54/18	75			400m	175J	Si▾	TO18
116	7C14/18	75			400m	175J	Si▾	TO18
117	7C24/18	75			400m	175J	Si▾	TO18
118	7C054/18	75			400m	175J	Si▾	TO18
119	10A14/18	100			400m	175J	Si▾	TO18
120	10A24/18	100			400m	175J	Si▾	TO18
121	10A54/18	100			400m	175J	Si▾	TO18
122	10B14/18	100			400m	175J	Si▾	TO18
123	10B24/18	100			400m	175J	Si▾	TO18
124	10B54/18	100			400m	175J	Si▾	TO18
125	10C14/18	100			400m	175J	Si▾	TO18
126	10C24/18	100			400m	175J	Si▾	TO18
127	10C054/18	100			400m	175J	Si▾	TO18
128	SA282	40	100m	1.0	400m		Si	A69a†
129	SA283	80	100m	1.0	400m		Si	A69a†
130	1N3895	350	200m	1.0	400m	150A	Si	A1
131	1N645A	225	400m	1.0	400m	150A	Si	A1
132	1N645B	225	.40	1.0	.40		Si	DO7
133	1N3894	400	400m	1.0	400m	150A	Si	A1
134	1N4541	225	400m	1.0	400m	200S	Si	DO14
135	1N4542	400	400m	1.0	400m	200S	Si	DO14
136	1N4543	600	400m	1.0	400m	200S	Si	DO14
137	1N4544	800	400m	1.0	400m	200S	Si	DO14
138	1N4545	1.0k	.40	1.0	.40	200S	Si	DO14
139	MC1529	900	400m	1.0	400m	175A	Si	A2d
140	PS4560	225	400m	1.0	400m	150A	Si*	A1
141	PS5300	225	400m	1.0	400m	200S	Si*	A60p
142	PS5301	300	400m	1.0	400m	200S	Si*	A60p
143	PS5302	400	400m	1.0	400m	200S	Si*	A60p
144	PS5303	500	400m	1.0	400m	200S	Si*	A60p
145	PS5304	600	400m	1.0	400m	200S	Si*	A60p
146	ZS100	50	400m	1.0	400m	175A	Si	DO7
147	ZS101	100	400m	1.0	400m	175A	Si	DO7
148	ZS102	200	400m	1.0	400m	175A	Si	DO7
149	ZS103	300	400m	1.0	400m	175A	Si	DO7
150	ZS104	400	400m	1.0	400m	175A	Si	DO7
151	ZS106	600	400m	1.0	400m	175A	Si	DO7
152	ZS108	800	400m	1.0	400m	175A	Si	DO7
153	BAX18A	75	2.0	1.4	400m	200J	Si#$	DO35
154	MC1527	700	400m	1.0	450m	175A	Si	A2d
155	MC1528	800	400m	1.0	450m	175A	Si	A2d
156	1A15/18	10			500m	175J	Si▾	TO18
157	1A25/18	10			500m	175J	Si▾	TO18
158	1A55/18	10			500m	175J	Si▾	TO18
159	1B15/18	10			500m	175J	Si▾	TO18
160	1B25/18	10			500m	175J	Si▾	TO18
161	1B55/18	25			500m	175J	Si▾	TO18
162	2A15/18	25			500m	175J	Si▾	TO18
163	2A25/18	25			500m	175J	Si▾	TO18
164	2A55/18	25			500m	175J	Si▾	TO18
165	2B15/18	25			500m	175J	Si▾	TO18
166	2B25/18	25			500m	175J	Si▾	TO18
167	2B55/18	25			500m	175J	Si△	TO18
168	2C15/18	25			500m	175J	Si▾	TO18
169	2C25/18	25			500m	175J	Si▾	TO18
170	2C055/18	25			500m	175J	Si▾	TO18
171	5A15/18	50			500m	175J	Si▾	TO18
172	5A25/18	50			500m	175J	Si▾	TO18
173	5A55/18	50			500m	175J	Si▾	TO18
174	5B15/18	50			500m	175J	Si▾	TO18
175	5B25/18	50			500m	175J	Si▾	TO18
176	5B55/18	50			500m	175J	Si▾	TO18
177	5C15/18	50			500m	175J	Si▾	TO18
178	5C25/18	50			500m	175J	Si▾	TO18
179	5C055/18	500			500m	175J	Si▾	TO18
180	7A15/18	75			500m	175J	Si▾	TO18
181	7A25/18	75			500m	175J	Si▾	TO18
182	7B15/18	75			500m	175J	Si▾	TO18
183	7B25/18	75			500m	175J	Si▾	TO18
184	7B55/18	75			500m	175J	Si▾	TO18
185	7C15/18	75			500m	175J	Si▾	TO18
186	7C25/18	75			500m	175J	Si▾	TO18
187	7C055/18	75			500m	175J	Si▾	TO18
188	10A15/18	100			500m	175J	Si▾	TO18
189	10A25/18	100			500m	175J	Si▾	TO18
190	10A55/18	100			500m	175J	Si▾	TO18
191	10B15/18	100			500m	175J	Si▾	TO18
192	10B25/18	100			500m	175J	Si▾	TO18
193	10B55/18	100			500m	175J	Si▾	TO18
194	10C15/18	100			500m	175J	Si▾	TO18
195	10C25/18	100			500m	175J	Si▾	TO18
196	10C055/18	100			500m	175J	Si▾	TO18
197	BAT49(A)	80	10m	320m	500m	125J	Si♦	DO41
198	MT456	30	40m	1.0	500m	175A	Si	A60e
199	MC023A	150	.40	1.0	.50	175A	Si	A2d
200	MC1520	100	500m	1.0	500m	175A	Si	A2d
201	MC1521	150	500m	1.0	500m	175A	Si	A2d
202	MC1522	200	500m	1.0	500m	175A	Si	A2d
203	MC1523	300	500m	1.0	500m	175A	Si	A2d
204	MC1524	400	500m	1.0	500m	175A	Si	A2d
205	MC1525	500	500m	1.0	500m	175A	Si	A2d
206	MC1526	600	500m	1.0	500m	175A	Si	A2d
207	1A16/18	10			600m	175J	Si▾	TO18
208	1A26/18	10			600m	175J	Si▾	TO18
209	1A56/18	10			600m	175J	Si▾	TO18
210	1B16/18	10			600m	175J	Si▾	TO18
211	1B26/18	25			600m	175J	Si▾	TO18
212	1B56/18	25			600m	175J	Si▾	TO18
213	2A16/18	25			600m	175J	Si▾	TO18
214	2A26/18	25			600m	175J	Si▾	TO18
215	2A56/18	25			600m	175J	Si▾	TO18
216	2B16/18	25			600m	175J	Si▾	TO18
217	2B26/18	25			600m	175J	Si▾	TO18
218	2B56/18	25			600m	175J	Si▾	TO18

SYMBOLS AND CODES EXPLAINED IN INTERPRETER

3. GENERAL-PURPOSE DIODES (Cont'd)

IN ORDER OF: (1) PIV (2) IO RATED MAX (3) IF MIN (4) @ VF & (5) TYPE NUMBER

LINE No.	5 TYPE NO.	1 PIV (V)	MINIMUM FORWARD CURRENT 3 IF (A)	4 @VF (V)	2 IO RATED MAX (A)	MAX. TEMP. (°C)	MAT.	DRAWING NO.
1	2C16/18	25			600m	175J	Si▼	TO18
2	2C26/18	25			600m	175J	Si▼	TO18
3	2C056/18	25			600m	175J	Si▼	TO18
4	5A16/18	50			600m	175J	Si▼	TO18
5	5A26/18	50			600m	175J	Si▼	TO18
6	5A56/18	50			600m	175J	Si▼	TO18
7	5B16/18	50			600m	175J	Si▼	TO18
8	5B26/18	50			600m	175J	Si▼	TO18
9	5B56/18	50			600m	175J	Si▼	TO18
10	5C16/18	50			600m	175J	Si▼	TO18
11	5C26/18	50			600m	175J	Si▼	TO18
12	5C056/18	500			600m	175J	Si▼	TO18
13	7A16/18	75			600m	175J	Si▼	TO18
14	7A26/18	75			600m	175J	Si▼	TO18
15	7A56/18	75			600m	175J	Si▼	TO18
16	7B16/18	75			600m	175J	Si▼	TO18
17	7B26/18	75			600m	175J	Si▼	TO18
18	7B56/18	75			600m	175J	Si▼	TO18
19	7C16/18	75			600m	175J	Si▼	TO18
20	7C26/18	75			600m	175J	Si▼	TO18
21	7C056/18	75			600m	175J	Si▼	TO18
22	10A16/18	100			600m	175J	Si▼	TO18
23	10A26/18	100			600m	175J	Si▼	TO18
24	10A56/18	100			600m	175J	Si▼	TO18
25	10B16/18	100			600m	175J	Si▼	TO18
26	10B26/18	100			600m	175J	Si▼	TO18
27	10B56/18	100			600m	175J	Si▼	TO18
28	10C16/18	100			600m	175J	Si▼	TO18
29	10C26/18	100			600m	175J	Si▼	TO18
30	10C056/18	100			600m	175J	Si▼	TO18
31	THD3600	75	10m	700m	600m	200J	Si	u23
32	1N5477	6.0k*	600m	10	600m§	150A	Si	M101a
33	1N5478	7.2k*	600m	12	600m§	150A	Si	M101a
34	1N5479	8.4k*	600m	14	600m§	150A	Si	M101a
35	1N5480	9.6k*	600m	16	600m§	150A	Si	M101a
36	1N5481	12k*	600m	21	600m§	150A	Si	M101a
37	2C17/18	25			700m	175J	Si▼	TO18
38	2C27/18	25			700m	175J	Si▼	TO18
39	2C057/18	25			700m	175J	Si▼	TO18
40	5C17/18	50			700m	175J	Si▼	TO18
41	5C27/18	50			700m	175J	Si▼	TO18
42	5C057/18	500			700m	175J	Si▼	TO18
43	7C17/18	75			700m	175J	Si▼	TO18
44	7C27/18	75			700m	175J	Si▼	TO18
45	7C057/18	75			700m	175J	Si▼	TO18
46	10C17/18	100			700m	175J	Si▼	TO18
47	10C27/18	100			700m	175J	Si▼	TO18
48	10C057/18	100			700m	175J	Si▼	TO18
49	SW16CXC320	1.6k	280 †	1.0	.96	200S	Si	DO200AA
50	SW18CXC320	1.8k	280 †	1.0	.96	200S	Si	DO200AA
51	SW20CXC320	2.0k	280 †	1.0	.96	200S	Si	DO200AA
52	SW22CXC320	2.2k	280 †	1.0	.96	200S	Si	DO200AA
53	SW24CXC320	2.4k	280 †	1.0	.96	200S	Si	DO200AA
54	DD1057	600	1.0	1.0	1.0	130L		DO15
55	BA133F	1.0k	1.0	1.1	1.0	175A	Si	DO41
56	1N5482	2.4k*	1.0	4.8	1.0 §	150A	Si	A1hy
57	1N5483	3.6k*	1.0	7.2	1.0 §	150A	Si	A1ms
58	1N5484	4.8k*	1.0	8.4	1.0 §	150A	Si	A1ms
59	1N5485	6.0k*	1.0	10	1.0 §	150A	Si	A1nu
60	1N3611	200	750m	1.0	2.0	300S	Si	A1xr
61	1N3612	400	750m	1.0	2.0	300S	Si	A1xr
62	1N3613	600	750m	1.0	2.0	300S	Si	A1xr
63	1N3614	800	750m	1.0	2.0	300S	Si	A1xr
64	S3WB60	600	2.0	1.0	2.3	150J	Si†	C219f
65	S3WB60Z	600	2.0	1.0	2.3	150J	Si†	C219f
66	S3WB60Z-S	600	2.0	1.0	2.3	150J	Si†	C219f
67	DHG3G80	8.0k	5.0m	27	3.0	120J	Si△	A425
68	DHG3A120	12k	5.0m	40	3.0	120J	Si△	A425
69	DHG3B140	14k	5.0m	50	3.0	120J	Si△	A425
70	DHG3C160	16k	5.0m	60	3.0	120J	Si△	A425
71	DHG3D200	20k	5.0m	70	3.0	120J	Si△	A425
72	DHG3E250	25k	5.0m	80	3.0	120J	Si△	A425
73	1N5626	600	3.0	950m	3.0 §	175A	Si	A249
74	1N5627	800	3.0	950m	3.0 §	175A	Si	A249
75	GS5628	1.0k	3.0	1.0	3.0 §	175J	Si	A249
76	OF305	15	2.0m	1.0	5.0	75A	GE☑	DO7
77	Y10EA	4.0k	5.0m	22	5.0	120J	Si△	A425
78	Y10GA	6.0k	5.0m	22	5.0	120J	Si△	A425
79	D5FB10	100	2.5	1.0	5.0	150J	Si†	M1138
80	D5FB60	600	2.5	1.0	5.0	150J	Si†	M1138
81	SHCDA05	50	9.0	1.0	12	150		M1314
82	SHCDA10	100	9.0	1.0	12	150		M1314
83	SHCDA20	200	9.0	1.0	12	150		M1314
84	SHCDA40	400	9.0	1.0	12	150		M1314
85	SHCDA60	600	9.0	1.0	12	150		M1314
86	SHCNA05	50	9.0	1.0	12	150		M1314
87	SHCNA10	100	9.0	1.0	12	150		M1314
88	SHCNA20	200	9.0	1.0	12	150		M1314
89	SHCNA40	400	9.0	1.0	12	150		M1314
90	SHCNA60	600	9.0	1.0	12	150		M1314
91	SHCPA05	50	9.0	1.0	12	150		M1314
92	SHCPA10	100	9.0	1.0	12	150		M1314
93	SHCPA20	200	9.0	1.0	12	150		M1314
94	SHCPA40	400	9.0	1.0	12	150		M1314
95	SHCPA60	600	9.0	1.0	12	150		M1314
96	SHCDA80	800	9.0	1.1	12	150		M1314
97	SHCDA100	1.0k	9.0	1.1	12	150		M1314
98	SHCNA80	800	9.0	1.1	12	150		M1314
99	SHCNA100	1.0k	9.0	1.1	12	150		M1314
100	SHCPA80	800	9.0	1.1	12	150		M1314
101	SHCPA100	1.0k	9.0	1.1	12	150		M1314
102	1SS199	30	3.0m	1.0	15	100J	Si♦	A380d
103	DD6521(A)	100	60	1.2	18	200J		
104	DD6621(A)	100	80	1.2	25	200J		
105	1SS198	10	4.5m	1.0	30	100J	Si♦	A380d
106	DD6721(A)	100	90	1.2	30	200J		
107	DD6726(A)	400	90	1.2	30	200J		
108	1S2186	20	100m	1.0	100	150J	Si$#	DO35

LINE No.	5 TYPE NO.	1 PIV (V)	MINIMUM FORWARD CURRENT 3 IF (A)	4 @VF (V)	2 IO RATED MAX (A)	MAX. TEMP. (°C)	MAT.	DRAWING NO.
136	SW20CXC380	2.0k	280 †	1.0	1.0k	200S	Si	200AA△Ø
137	SW20CXC805	2.0k	280 †	1.0	1.0k	200S	Si	DO200AA
138	SW22CXC380	2.2k	280 †	1.0	1.0k	200S	Si	DO200AA
139	SW24CXC380	2.4k	280 †	1.0	1.0k	200S	Si	DO200AA
140	SW16CXC380	1.6k	290 †	1.0	1.0k	200S	Si	DO200AA
141	SW18CXC380	1.8k	290 †	1.0	1.0k	200S	Si	DO200AA
142	SW04CXC300	400	300 †	.95	1.0k	200S	Si	DO200AC
143	SW06CXC300	600	300 †	.95	1.0k	200S	Si	DO200AC
144	SW08CXC300	800	300 †	.95	1.0k	200S	Si	DO200AA
145	SW10CXC300	1.0k	300 †	.95	1.0k	200S	Si	DO200AA
146	SW12CXC300	1.2k	300 †	.95	1.0k	200S	Si	DO200AA
147	SW14CXC300	1.4k	300 †	.95	1.0k	200S	Si	DO200AA
148	SW15CXC300	1.5k	300 †	.95	1.0k	200S	Si	DO200AA
149	SW04CXC400	400	380 †	0.8	1.2k	200S	Si	DO200AA
150	SW06CXC400	600	380 †	0.8	1.2k	200S	Si	DO200AA
151	SW08CXC400	800	380 †	0.8	1.2k	200S	Si	DO200AA
152	SW10	1.0k	380 †	0.8	1.2k	200S	Si	DO200AA
153	SW10CXC400	1.0k	380 †	0.8	1.2k	200S	Si	DO200AA
154	SW12CXC400	1.2k	380 †	0.8	1.2k	200S	Si	DO200AA
155	SW14CXC400	1.4k	380 †	0.8	1.2k	200S	Si	DO200AA
156	SW15CXC400	1.5k	380 †	0.8	1.2k	200S	Si	DO200AA
157	SW38CXC515	3.8k	510 †	1.0	1.9k	185S	Si	DO200AB
158	SW40CXC515	4.0k	510 †	1.0	1.9k	185S	Si	DO200AB
159	SW42CXC515	4.2k	510 †	1.0	1.9k	185S	Si	DO200AB
160	SW44CXC515	4.4k	510 †	1.0	1.9k	185S	Si	DO200AB
161	SW32CXC595	3.2k	590 †	0.9	2.3k	185S	Si	DO200AB
162	SW34CXC595	3.4k	590 †	0.9	2.3k	185S	Si	DO200AB
163	SW36CXC595	3.6k	590 †	0.9	2.3k	185S	Si	DO200AB
164	SW36CXC680	3.6k	617 †	.98	2.3k	200S	Si	DO200AC
165	SW38CXC680	3.8k	617 †	.98	2.3k	200S	Si	DO200AC
166	SW40CXC680	4.0k	617 †	.98	2.3k	200S	Si	DO200AC
167	SW42CXC680	4.2k	617 †	.98	2.3k	200S	Si	DO200AC
168	SW44CXC680	4.4k	617 †	.98	2.3k	200S	Si	DO200AC
169	SW24CXC635	2.4k	630 †	.87	2.4k	185S	Si	DO200AB
170	SW26CXC635	2.6k	630 †	.87	2.4k	185S	Si	DO200AB
171	SW28CXC635	2.8k	630 †	.87	2.4k	185S	Si	DO200AB
172	SW04CXC805	400	800 †	.87	2.7k	200S	Si	DO200AB
173	SW06CXC805	600	800 †	.87	2.7k	200S	Si	DO200AB
174	SW08CXC805	800	800 †	.87	2.7k	200S	Si	DO200AB
175	SW10CXC805	1.0k	800 †	.87	2.7k	200S	Si	DO200AB
176	SW12CXC805	1.2k	800 †	.87	2.7k	200S	Si	DO200AB
177	SW14CXC805	1.4k	800 †	.87	2.7k	200	Si	DO200AB
178	SW16CXC805	1.6k	800 †	.87	2.7k	200S	Si	DO200AB
179	SW18CXC805	1.8k	800 †	.87	2.7k	200S	Si	DO200AB
180	SW22CXC805	2.2k	800 †	.87	2.7k	200S	Si	DO200AB
181	SW26CXC820	2.6k	760 †	.87	2.8k	200S	Si	DO200AC
182	SW28CXC820	2.8k	760 †	.87	2.8k	200S	Si	DO200AC
183	SW30CXC820	3.0k	760 †	.87	2.8k	200S	Si	DO200AC
184	SW32CXC820	3.2k	760 †	.87	2.8k	200S	Si	DO200AC
185	SW34CXC820	3.4k	760 †	.87	2.8k	200S	Si	DO200AC
186	SW36CXC820	3.6k	760 †	.87	2.8k	200S	Si	DO200AC
187	SW04CXC935	400	936 †	.79	3.2k	200S	Si	DO200AB
188	SW06CXC935	600	936 †	.79	3.2k	200S	Si	DO200AB
189	SW08CXC935	800	936 †	.79	3.2k	200S	Si	DO200AB
190	SW04CXC14C	400	1.2k†	.73	4.3k	200S	Si	DO200AC
191	SW06CXC14C	600	1.2k†	.73	4.3k	200S	Si	DO200AC
192	SW08CXC14C	800	1.2k†	.73	4.3k	200S	Si	DO200AC
193	SW10CXC14C	1.0k	1.2k†	.73	4.3k	200S	Si	DO200AC
194	SW12CXC14C	1.2k	1.2k†	.73	4.3k	200S	Si	DO200AC
195	SW14CXC14C	1.4k	1.2k†	.73	4.3k	200S	Si	DO200AC
196	SW15CXC14C	1.5k	1.2k†	.73	4.3k	200S	Si	DO200AC

SYMBOLS AND CODES EXPLAINED IN INTERPRETER

4. HIGH-SPEED DIODES – Fast Recovery/Switching

IN ORDER OF: (1) IF TEST (2) PIV (3) trr & (4) & VF & (5) TYPE NUMBER

FAST RECOVERY/SWITCHING DIODE

LINE No.	5 TYPE NO.	2 PIV (V)	RECOVERY TIME 3 trr (s)	TEST CONDITIONS 1 IF (A)	4 VR (V)	IR (A)	MAX. TEMP (°C)	MAT.	DRAWING NO.
4	H5021113LSWA								
5	R6221055ES00								
6	NSC5001		250n						A3q
7	NSC5002		250n						A3q
8	NSC5003		250n						A3q
9	40C1R20		.30u				150S	Si	S19z
10	BD1	440m	1.0n		0.4	1.0m	100	Ge	DO17
11	BD4	465m	400p		0.4	1.0m	100	Ge	DO17
12	BD5	465m	400p		0.4	1.0m	100	Ge	DO17
13	BD6	465m	400p		0.4	1.0m	100	Ge	DO17
14	BD7	465m	400p		0.4	1.0m	100	Ge	DO17
15	BD3	465m	500p		0.4	1.0m	100	Ge	DO17
16	BD2	465m	700p		0.4	1.0m	100	Ge	DO17
17	HV75	2.5					175J		DO41
18	HSK23	3.0					125J	Si	F138
19	DSH4785-10	5.0					150	Si♦	A1ak
20	DSH4787-10	5.0					150	Si♦	A1ak
21	HD1872	6.0	4.0n					GeØ	DO7
22	HD1842	6.0	6.0n					GeØ	DO7
23	DSH4787-15	10					150	Si♦	A1ak
24	ISS106	10 $					17	Si♦	DO35
25	HP5082-2900	10	.12n				100A	Si♦♦	A1ad
26	HD1812	10	9.0n					GeØ	DO7
27	H850	10	300n				100A		M1181
28	KD514A	10	100u				100A	Si#$	A344m
29	1S2210	11 $					150S	Si$♦	A1ua
30	1N4888	12	500p			20m	200S	Si	DO7
31	DSH4787-20	15					150	Si♦	A1ak
32	2R2/18	20					175J	Si▼	TO18
33	BA243	20					150J	Si	DO35
34	DSH4787-30	20					150	Si♦	A1ak
35	MA56	20					100S	Si	A246
36	1S1993	20	30p				100	Si$♦	DO7
37	1S1995	20	30p				100	Si$♦	DO7
38	MS303	20	2.0nC				125		A1ad
39	SH100#B	20	4.0n					Si	TO18
40	SH101	20	50n					Si	TO18
41	HMG929	25						Si	F133a
42	SA40	25	2.0n					Si	A69a
43	3R2/18	30					175J	Si▼	TO18
44	DSH4785-40	30					150	Si♦	A1ak
45	DSH4787-40	30					150	Si♦	A1ak
46	LL4453	30					175J	Si	F135
47	MA57	30					100S	Si	M713b
48	MA72	30					100S	Si	M1315
49	MA856	30							DO34
50	MA858	30							DO34
51	1S1992	30	30p				100	Si$♦	DO7
52	1S1994	30	30p				100	Si$♦	DO7
53	MS301	30	2.0nC				125		A1ad
54	MS302	30	2.0nC				125		A1ad
55	HD1811	30	9.0n					GeØ	DO7
56♦	SF1	30	25n					Si	DO41
57♦	SF425	30	35n					Si	D04
58♦	SFC330	30	35n					Si	T03
59♦	SF330	30	50n					Si	TO3
60♦	SF530	30	50n					Si	DO5
61♦	SF46	30	70n					Si	DO5
62♦	SF315	30	70n					Si	DO5
63♦	SF415	30	70n					Si	DO5
64♦	SF515	30	70n					Si	DO5
65	1S2211	33 $					150S	Si$♦	A1ua
66	BA243A	35					150J	Si	DO35
67♦	BA482	35					150J	Si	DO34
68♦	BA483	35 $					15	Si	DO34
69	HSK110	35					125J	Si	F138
70	HP5082-0243	35	150p				175A	Si$	F27d
71	4R2/18	40					175J	Si▼	TO18
72	SH110	40	4.0n					Si	TO18
73	SH111	40	50n					Si	TO18
74	1P643	50					150J	Si	A1bg
75	5R2/18	50					175J	Si▼	TO18
76	HMG4092	50						Si	F133a
77	SA42	50	2.0n					Si	A69a
78▼	GE1001(A)	50	25n				175J		A453
79▼	GE1101(A)	50	25n				175J		A453
80♦	SF2	50	25n					Si	DO41
81♦	SF11	50	25n					Si	DO13
82▼	GE1301(A)	50	30n				175J		A453a
83▼	A315F(A)	50	35n				175J		A333l
84▼	SF21	50	35n				175A	Si	DO15
85▼	SF31	50	35n				175A	Si	DO27
86▼	SF51	50	35n				175A	Si	DO27
87▼	SF81	50	35n				175A	Si	TO220A
88▼	SF151	50	35n				175A	Si	DO4
89▼	SF201	50	35n				175A	Si	DO5
90	SF4251	50	35n				150J		DO4Ø
91	SFC3301	50	35n				150J		TO3Ø
92	SF3301	50	50n				150J		TO3
93	SF5301	50	50n				150J		DO5Ø
94♦	SF461	50	70n					Si	DO5
95	FR151	50	150n				175A		DO15
96♦	FR501G	50	150n				175		Alaba
97	ICR1001	50	150n				175	Si	DO41
98	ICR1501	50	150n				175	Si	DO41
99	ICR3001	50	150n				175	Si	DO27
100	ICR6001	50	150n				175	Si	A398j
101	MR1001	50	150n				175J	Si	DO41
102	MR3001	50	150n				175J	Si	DO27
103	NSC3000	50	150n						A3q
104▼	RL101F	50	150n				175A	Si	A395
105▼	RL101FG	50	150n				175A	Si	D015
106▼	RP100	50	150n					Si	DO41
107♦	RP150	50	150n					Si	DO15
108▼	RP300	50	150n					Si	DO201AD
109▼	RP600	50	150n					Si	Aleg
110	NS30000	50	200n						DO5
111	424FF1AH1	50	250n				125	Si	M1233
112	BA127D	60					125A	Si	A277r
113	SH120	60	4.0n					Si	TO18
114	MC1545	60	50n				200S	Si	A1r
115	1N891	60	300n				175	Si	DO7
116	1N119	60	500n				90A	GeØ	A47a
117	1N120	60	500n				90A	GeØ	A47a
118♦	1SV154	65					175J	Si	A1j
119♦	1SV178	65					175J	Si	A1ad
120▼	1SV187	65					175J	Si	A277s
121	7R2/18	70					175J	Si▼	TO18
122	DSN6560-50	70					200	Si♦	A1ak
123	DSN6566-50	70					200	Si♦	A1ak
124	10F1R07	70	.25u				150S	Si	M1097
125	10F1S07	70	.25u				150S	Si	M1097
126	20F1R07	70	.25u				150S	Si	M856
127	20F1S07	70	.25u				150S	Si	M856
128	20F2R07	70	.25u				150S	Si	C63k
129	20F2S07	70	.25u				150S	Si	C63k
130	40F1R07	70	.25u				150S	Si	S19z
131	40F1S07	70	.25u				150S	Si	S19z
132	5F1R07	70	.30u				150S	Si	M1097
133	HMG930	75						Si	F133a
134	SA43	75	2.0n					Si	A69a
135	JPAD5	80					135S	Si	TO92
136	JPAD10	80					135S	Si	TO92
137	JPAD20	80					135S	Si	TO92
138	JPAD50	80					135S	Si	TO92
139	JPAD100	80					135S	Si	TO92
140	JPAD200	80					135S	Si	TO92
141♦	JPAD500	80					135S	Si	TO92
142	1P644	100					150J	Si	A1bg
143	10R2/18	100					175J	Si▼	TO18
144	SA44	100	2.0n					Si	A69a
145▼	GE1002(A)	100	25n				175J		A453
146▼	GE1102(A)	100	25n				175J		A453
147♦	SF12	100	25n					Si	DO13
148▼	GE1302(A)	100	30n				175J		A453a
149▼	A315A(A)	100	35n				175J		A333l
150▼	SF22	100	35n				175A	Si	DO15
151▼	SF32	100	35n				175A	Si	DO27
152▼	SF52	100	35n				175A	Si	DO27
153▼	SF82	100	35n				175A	Si	TO220A
154▼	SF152	100	35n				175A	Si	DO4
155▼	SF202	100	35n				175A	Si	DO5
156	SF4252	100	35n				150J		DO4Ø
157	SFC3302	100	35n				150J		TO3Ø
158	SF3302	100	50n				150J		TO3
159	SF5302	100	50n				150J		DO5Ø
160	PD9767	100	70n						DO5
161♦	SF462	100	70n					Si	DO5
162♦	SF4152	100	70n					Si	DO5
163	FR152	100	150n				175A		DO15
164♦	FR502	100	150n				175		Alaba
165♦	FR502G	100	150n				175		Alaba
166	ICR1002	100	150n				175	Si	DO41
167	ICR1502	100	150n				175	Si	DO41
168	ICR3002	100	150n				175	Si	DO27
169	ICR6002	100	150n				175	Si	A398j
170	MR1002	100	150n				175J	Si	DO41
171	MR3002	100	150n				175J	Si	DO27
172	NSC3001	100	150n						A3q
173▼	RL102F	100	150n				175A	Si	A395
174▼	RL102FG	100	150n				175A	Si	D015
175▼	RP101	100	150n					Si	DO41
176▼	RP151	100	150n					Si	DO15
177▼	RP301	100	150n					Si	DO201AD
178▼	RP601	100	150n					Si	Aleg
179▼	BYX55-100	100	200n					Si	T039
180	NS30001	100	200n						DO5
181	NSR8140	100	200n				150A		TO3Ø
182▼	SF0301	100	200n					Si	T039
183	20C1R10	100	.25u				150S	Si	M856
184	20C1S10	100	.25u				150S	Si	M856
185	424AF1AH1	100	250n				125	Si	M1233
186	S870R	100	.25u				150S	Si	S536
187	S870S	100	.25u				150S	Si	S536
188	5C1R10	100	.30u				150S	Si	M1097
189	5C1S10	100	.30u				150S	Si	M1097
190	10C1R10	100	.30u				150S	Si	M1097
191	10C1S10	100	.30u				150S	Si	M1097
192	10C2R10	100	.30u				150S	Si	C63b
193	10C2R11	100	300n				102A	Si	TO66
194	10C2S10	100	.30u				150S	Si	C63b
195	10C2S11	100	300n				102A	Si	TO66
196	10C2SR11	100	.30u				150S	Si	TO66
197	10C2SS11	100	.30u				150S	Si	T066
198	20C2R10	100	.30u				150S	Si	C63k
199	20C2S10	100	.30u				150S	Si	C63k
200	40C1R10	100	.30u				150S	Si	S19z
201	40C1S10	100	.30u				150S	Si	S19z
202	FC210R	100	300n				120A	Si	M1099
203	PF110R	100	300n				120S	Si	M856
204	PF310R	100	300n				120S	Si	S456
205	PF810R	100	.30u				120S	Si	S171m
206	A337A	100	2.0u				125J	Si	M1147
207	DSF1108SM01	100	2.6u				150C	Si	
208▼	SF10001	100	3.0u					Si	D08
209▼	SF15001	100	3.0u					Si	D08
210▼	SF27501	100	3.0u					Si	D09
211	PDR301	100	20u				150	Si	DO15
212	A198A	100	42uC				175	Si	S534Ø
213♦	MR801	100	200u				150J	Si♦	
214♦	A398A	100	42 C				175J	Si	M1147
215	1N892	120	300n				175	Si	DO7
216♦	1SV192	125					175J	Si	A1zy
217	MC1546	125	50n				200S	Si	A1r
218▼	GE1003(A)	150	25n				175J		A453

SYMBOLS AND CODES EXPLAINED IN INTERPRETER

4. HIGH-SPEED DIODES - Fast Recovery/Switching (Cont'd)

IN ORDER OF: (1) IF TEST (2) PIV (3) trr & (4) & VF & (5) TYPE NUMBER

LINE No.	5 TYPE NO.	2 PIV (V)	RECOVERY TIME 3 trr (s)	TEST CONDITIONS 1 IF (A)	4 VR (V)	IR (A)	MAX. TEMP (°C)	MAT.	DRAWING NO.
1▼	GE1103(A)	150	25n				175J		A453
2♦	SF13	150	25n					Si	DO13
3▼	GE1303(A)	150	30n				175J		A453a
4▼	A315G(A)	150	35n				175J		A333I
5▼	SF23	150	35n				175A	Si	DO15
6▼	SF33	150	35n				175A	Si	DO27
7▼	SF53	150	35n				175A	Si	DO27
8▼	SF83	150	35n				175A	Si	TO220A
9▼	SF153	150	35n				175A	Si	DO4
10▼	SF203	150	35n				175A	Si	DO5
11	SF4253	150	35n				150J		DO4Ø
12	SFC3303	150	35n				150J		TO3Ø
13	SF3303	150	50n				150J		TO3
14	SF5303	150	50n				150J		DO5Ø
15	10F1R15	150	.25u				150S	Si	M1097
16	10F1S15	150	.25u				150S	Si	M1097
17	10F2R15	150	.25u				150S	Si	C63b
18	10F2S15	150	.25u				150S	Si	C63b
19	20F1R15	150	.25u				150S	Si	M856
20	20F1S15	150	.25u				150S	Si	M856
21	20F2R15	150	.25u				150S	Si	C63k
22	20F2S15	150	.25u				150S	Si	C63k
23	40F1R15	150	.25u				150S	Si	S19z
24	40F1S15	150	.25u				150S	Si	S19z
25	5F1R15	150	.30u				150S	Si	M1097
26	PD9757	175	70n						DO5
27▼	A315B(A)	200	35n				175J		A333I
28▼	SF14	200	35n				175A	Si	DO41
29▼	SF24	200	35n				175A	Si	DO15
30▼	SF34	200	35n				175A	Si	DO27
31▼	SF54	200	35n				175A	Si	DO27
32▼	SF84	200	35n				175A	Si	TO220A
33▼	SF154	200	35n				175A	Si	DO4
34▼	SF204	200	35n				175A	Si	DO5
35▼	GE1004(A)	200	40n				175J		A453
36▼	GE1104(A)	200	50n				150J		A453
37▼	GE1304(A)	200	50n				150J		A453a
38	MC1547	200	50n				200S	Si	A1r
39	FR153	200	150n				175A		DO15
40♦	FR503	200	150n				175		Alaba
41♦	FR503G	200	150n				175		Alaba
42	ICR1003	200	150n				175	Si	DO41
43	ICR1503	200	150n				175	Si	DO41
44	ICR3003	200	150n				175	Si	DO27
45	ICR6003	200	150n				175	Si	A398j
46	MR1003	200	150n				175J	Si	DO41
47	MR3003	200	150n				175J	Si	DO27
48	NSC3002	200	150n						A3q
49▼	RL103F	200	150n				175A	Si	A395
50▼	RL103FG	200	150n				175A	Si	D015
51▼	RP102	200	150n					Si	DO41
52▼	RP152	200	150n					Si	DO15
53▼	RP302	200	150n					Si	DO201AD
54▼	RP602	200	150n					Si	Aleg
55▼	BYX55-200	200	200n					Si	T039
56	NS30002	200	200n						DO5
57	NSR8141	200	200n				150A		TO3Ø
58▼	SF0302	200	200n					Si	T039
59	424BF1AH1	200	250n				125	Si	M1233
60	5C1R20	200	.30u				150S	Si	M1097
61	5C1S20	200	.30u				150S	Si	M1097
62	5E1R20	200	.30u				150S	Si	M1097
63	5E1S20	200	.30u				150S	Si	M1097
64	10C1R20	200	.30u				150S	Si	M1097
65	10C1S20	200	.30u				150S	Si	M1097
66	10C2R20	200	300n				95A	Si	C63I
67	10C2R21	200	300n				102A	Si	TO66
68	10C2S20	200	.30u				150S	Si	C63b
69	10C2S21	200	300n				102A	Si	TO66
70	10C2SR20	200	.30u				150S	Si	C63b
71	10C2SR21	200	.30u				150S	Si	TO66
72	10C2SS21	200	.30u				150S	Si	T066
73	10E1R20	200	.30u				150S	Si	M1097
74	10E1S20	200	.30u				150S	Si	M1097
75	10E2R20	200	.30u				150S	Si	C63b
76	10E2R21	200	.30u				150S	Si	TO66
77	10E2S20	200	.30u				150S	Si	TO66
78	10E2S21	200	.30u				150S	Si	TO66
79	20C1R20	200	.30u				150S	Si	M856
80	20C1S20	200	.30u				150S	Si	M856
81	20C2R20	200	.30u				150S	Si	C63k
82	20C2S20	200	.30u				150S	Si	C63k
83	20E1R20	200	.30u				150S	Si	M856
84	20E1S20	200	.30u				150S	Si	M856
85	20E2R20	200	.30u				150S	Si	C63k
86	20E2S20	200	.30u				150S	Si	C63k
87	40C1S20	200	.30u				150S	Si	S19z
88	40E1R20	200	.30u				150S	Si	S19z
89	40E1S20	200	.30u				150S	Si	S19z
90	PF820R	200	.30u				120S	Si	S171m
91	SKR4F20/02	200	400n				130J	Si	DO4
92	SKR4F40/02	200	400n				130J	Si	DO5
93	A337B	200	2.0u				125J	Si	M1147
94	DSF1108SM02	200	2.6u				150C	Si	
95▼	SF10002	200	3.0u					Si	D08
96▼	SF15002	200	3.0u					Si	D08
97▼	SF27502	200	3.0u					Si	D09
98	A198B	200	42uC				175	Si	S534Ø
99	A398B	200	42uC				175J	Si	M1147
100♦	MR802	200	200u				150J	Si♦	
101▼	1N4942G	200	150				175A	Si	D041
102	1P645	225					150J	Si	A1gb
103	1N893	240	300n				175	Si	DO7
104	FC225R	250	300n				120A	Si	M1099
105	PF125R	250	300n				120S	Si	M856
106	PF325R	250	300n				120S	Si	S456
107	PF825R	250	.30u				120S	Si	S171m
108	1P646	300					150J	Si	A1bgft
109	MC1548	300	50n				200S	Si	A1r
110▼	ESM243-300	300	100n					Si	D05
111♦	KD5051	300	100n						
112	NSC3003	300	150n						A3q
113▼	BYX55-300	300	200n					Si	T039
114	NS30003	300	200n						DO5
115	5C1R30	300	.30u				150S	Si	M1097
116	5C1S30	300	.30u				150S	Si	M1097
117	10C1R30	300	.30u				150S	Si	M1097
118	10C1S30	300	.30u				150S	Si	M1097
119	10C2R30	300	300n				95A	Si	C63I
120	10C2S30	300	300n				95A	Si	C63I
121	10C2SR30	300	.30u				150S	Si	C63b
122	10C2SR31	300	.30u				150S	Si	TO66
123	10C2SS30	300	.30u				150S	Si	C63b
124	10C2SS31	300	.30u				150S	Si	TO66
125	20C1R30	300	.30u				150S	Si	M856
126	20C1S30	300	.30u				150S	Si	M856
127	20C2R30	300	.30u				150S	Si	C63k
128	20C2S30	300	.30u				150S	Si	C63k
129	40C1R30	300	.30u				150S	Si	S19z
130	40C1S30	300	.30u				150S	Si	S19z
131	A337C	300	2.0u				125J	Si	M1147
132	DSF1108SM03	300	2.6u				150C	Si	
133	PDR300	300	10u				150	Si	DO15
134	A198C	300	42uC				175	Si	S534Ø
135	A398C	300	42uC				175J	Si	M1147
136♦	KD5052	350	100n						
137	1P647	400					150J	Si	A1bg
138	DSR54	400	20n						A60ae
139	DSR3400X	400	20n						A226c
140	DSR5400X	400	20n						A380b
141♦	DSR34000X	400	20n					Si	A266c
142♦	DSR54000X	400	20n					Si	A196f
143	MC1549	400	50n				200S	Si	A1r
144♦	KD5053	400	100n						
145	FR154	400	150n				175A		DO15
146♦	FR504	400	150n				175		Alaba
147♦	FR504G	400	150n				175		Alaba
148	ICR1004	400	150n				175	Si	DO41
149	ICR1504	400	150n				175	Si	DO41
150	ICR3004	400	150n				175	Si	DO27
151	ICR6004	400	150n				175	Si	A398j
152	MR1004	400	150n				175J	Si	DO41
153	MR3004	400	150n				175J	Si	DO27
154	NSC3004	400	150n						A3q
155▼	RL104F	400	150n				175A	Si	A395
156▼	RL104FG	400	150n				175A	Si	D015
157▼	RP104	400	150n					Si	DO41
158▼	RP154	400	150n					Si	DO15
159▼	RP304	400	150n					Si	DO201AD
160▼	RP604	400	150n					Si	Aleg
161▼	BYX55-400	400	200n					Si	T039
162	NS30004	400	200n						DO5
163	NSR8142	400	200n				150A		TO3Ø
164▼	SF0304	400	200n					Si	T039
165	424DF1AH1	400	250n				125	Si	M1233
166	NSC5004	400	250n						A3q
167	5E1R40	400	.30u				150S	Si	M1097
168	5E1S40	400	.30u				150S	Si	M1097
169	10E1R40	400	.30u				150S	Si	M1097
170	10E1S40	400	.30u				150S	Si	M1097
171	10E2R40	400	.30u				150S	Si	C63b
172	10E2R41	400	.30u				150S	Si	TO66
173	10E2S40	400	.30u				150S	Si	C63b
174	10E2S41	400	.30u				150S	Si	TO66
175	20E1R40	400	.30u				150S	Si	M856
176	20E1S40	400	.30u				150S	Si	M856
177	20E2R40	400	.30u				150S	Si	C63k
178	20E2S40	400	.30u				150S	Si	C63k
179	40E1R40	400	.30u				150S	Si	S19z
180	40E1S40	400	.30u				150S	Si	S19z
181	FC240R	400	300n				120A	Si	M1099
182	PF140R	400	300n				120S	Si	M856
183	PF340R	400	300n				120S	Si	S456
184	UF1	400	.30u				130S	Si	N
185	SKR4F20/04	400	400n				130J	Si	DO4
186	SKR4F40/04	400	400n				130J	Si	DO5
187	A337D	400	2.0u				125J	Si	M1147
188	DSF1108SM04	400	2.6u				150C	Si	
189▼	SF10004	400	3.0u					Si	D08
190▼	SF15004	400	3.0u					Si	D08
191▼	SF27504	400	3.0u					Si	D09
192	A198D	400	42uC				175	Si	S534Ø
193	A398D	400	42uC				175J	Si	M1147
194♦	MR804	400	200u				150J	Si♦	
195▼	1N4944G	400	150				175A	Si	D041
196♦	KD5054	450	100n						
197	1P648	500					150J	Si	A1bg
198	DSR55	500	20n						A60ae
199	DSR3500X	500	20n						A226c
200	DSR5500X	500	20n						A380b
201♦	DSR35000X	500	20n					Si	A266c
202♦	DSR55000X	500	20n					Si	A196f
203	MC1550	500	50n				200S	Si	A1r
204♦	KD5055	500	100n						
205	NSC3005	500	150n						A3q
206	NSC5005	500	250n						A3q
207	S15H	500	.30u				140S	Si	A268
208▼	BYX55-500	500	350n					Si	T039
209	PBYX55	500	750n				125	Si	DO15
210	A337E	500	2.0u				125J	Si	M1147
211	DSF1108SM05	500	2.6u				150C	Si	
212	A198E	500	42uC				175	Si	S534Ø
213	A398E	500	42uC				175J	Si	M1147
214	A447E	500	100uC				125J	Si	C245
215	MR800#B	500	200u				15	Si	
216♦	KD5056	550	100n						
217	DSR56	600	35n						A60ae
218	DSR3600X	600	35n						A226c
219	DSR5600X	600	35n						A380b
220♦	DSR36000X	600	35n						A266c

SYMBOLS AND CODES EXPLAINED IN INTERPRETER

4. HIGH-SPEED DIODES - Fast Recovery/Switching (Cont'd)

IN ORDER OF: (1) IF TEST (2) PIV (3) trr & (4) & VF & (5) TYPE NUMBER

LINE No.	5 TYPE NO.	2 PIV (V)	RECOVERY TIME 3 trr (s)	TEST CONDITIONS 1 IF (A)	4 VR (V)	IR (A)	MAX. TEMP (°C)	MAT.	DRAWING NO.
1♦	DSR56000X	600	35n						A196f
2	NSC3006	600	150n						A3q
3	NSR8143	600	200n				150A		TO3Ø
4	424MF1AH1	600	250n				125	Si	M1233
5	FR155	600	250n				175A		DO15
6♦	FR505	600	250n				175		Alaba
7♦	FR505G	600	250n				175		Alaba
8	ICR1005	600	250n				175	Si	DO41
9	ICR1505	600	250n				175	Si	DO41
10	ICR3005	600	250n				175	Si	DO27
11	ICR6005	600	250n				175	Si	A398j
12	MR1005	600	250n				175J	Si	DO41
13	MR3005	600	250n				175J	Si	DO27
14	NSC5006	600	250n						A3q
15▼	RL105F	600	250n				175A	Si	A395
16▼	RL105FG	600	250n				175A	Si	D015
17▼	RP106	600	250n					Si	DO41
18▼	RP156	600	250n					Si	DO15
19▼	RP306	600	250n					Si	DO201AD
20▼	RP606	600	250n					Si	Aleg
21	5E1R60	600	.30u				150S	Si	M1097
22	5E1S60	600	.30u				150S	Si	M1097
23	10E1R60	600	.30u				150S	Si	M1097
24	10E1S60	600	.30u				150S	Si	M1097
25	10E2R60	600	.30u				150S	Si	C63b
26	10E2R61	600	.30u				150S	Si	TO66
27	10E2S60	600	.30u				150S	Si	C63b
28	10E2S61	600	.30u				150S	Si	TO66
29	20E1R60	600	.30u				150S	Si	M856
30	20E1S60	600	.30u				150S	Si	M856
31	20E2R60	600	.30u				150S	Si	C63k
32	20E2S60	600	.30u				150S	Si	C63k
33	40E1R60	600	.30u				150S	Si	S19z
34	40E1S60	600	.30u				150S	Si	S19z
35	UF1A	600	.30u				130S	Si	A271d
36▼	SF0306	600	350n					Si	T039
37▼	SF0606	600	350n					Si	T039
38	SKR4F20/06	600	400n				130J	Si	DO4
39	SKR4F40/06	600	400n				130J	Si	DO5
40	A337M	600	2.0u				125J	Si	M1147
41	DSF1108SM06	600	2.6u				150C	Si	
42▼	SF10006	600	3.0u					Si	D08
43▼	SF15006	600	3.0u					Si	D08
44▼	SF27506	600	3.0u					Si	D09
45	A198M	600	42uC				175	Si	S534Ø
46	A398M	600	42uC				175J	Si	M1147
47	A447M	600	100uC				125J	Si	C245
48♦	MR806	600	200u				150J	Si	
49▼	1N4946G	600	250				175A	Si	D041
50	DSR3700X	700	35n						A226c
51	DSR5700X	700	35n						A380b
52♦	DSR37000X	700	35n						A266c
53♦	DSR57000X	700	35n						A196f
54	NSC3007	700	150n						A3q
55	10F2R07	700	.25u				150S	Si	C63b
56	10F2S07	700	.25u				150S	Si	C63b
57	A337S	700	2.0u				125J	Si	M1147
58	DSF1108SM07	700	2.6u				150C	Si	
59	A198S	700	42uC				175	Si	S534Ø
60	A398S	700	42uC				175J	Si	M1147
61	A447S	700	100uC				125J	Si	C245
62	DSR3800X	800	50n						A226c
63	DSR5800X	800	50n						A380b
64♦	DSR38000X	800	50n						A266c
65♦	DSR58000X	800	50n						A196f
66	NSC3008	800	150n						A3q
67▼	BYT75-800	800	200n					Si	D08
68	424DF2AH1	800	250n				125	Si	M1233
69	NSC5008	800	250n						A3q
70	UF1B	800	.30u				130S	Si	A271d
71▼	BYX63-800	800	350n					Si	T039
72▼	BYX64-800	800	350n					Si	T039
73▼	ESM244-800	800	350n					Si	T039
74▼	SF0308	800	350n					Si	T039
75▼	SF0608	800	350n					Si	T039
76	SKR4F40/08	800	400n				130J	Si	DO5
77	363S	800	500n				150J		DO27
78	388S	800	500n				150J		DO15
79	FR156	800	500n				175A		DO15
80♦	FR506	800	500n				175		Alaba
81♦	FR506G	800	500n				175		Alaba
82	ICR1006	800	500n				175	Si	DO41
83	ICR1506	800	500n				175	Si	DO41
84	ICR3006	800	500n				175	Si	DO27
85	ICR6006	800	500n				175	Si	A398j
86	MR1006	800	500n				175J	Si	DO41
87	MR3006	800	500n				175J	Si	DO27
88▼	RL106F	800	500n				175A	Si	A395
89▼	RL106FG	800	500n				175A	Si	D015
90▼	RP108	800	500n					Si	DO41
91▼	RP158	800	500n					Si	DO15
92▼	RP308	800	500n					Si	DO201AD
93▼	RP608	800	500n					Si	Aleg
94	A337N	800	2.0u				125J	Si	M1147
95	DSF1108SM08	800	2.6u				150C	Si	
96▼	SF10008	800	3.0u					Si	D08
97▼	SF15008	800	3.0u					Si	D08
98▼	SF27508	800	3.0u					Si	D09
99	A198N	800	42uC				175	Si	S534Ø
100	A398N	800	42uC				175J	Si	M1147
101	A447N	800	100uC				125J	Si	C245
102▼	1N4947G	800	250				175A	Si	D041
103	A337T	900	2.0u				125J	Si	M1147
104	DSF1108SM09	900	2.6u				150C	Si	
105	A198T	900	42uC				175	Si	S534Ø
106	A398T	900	42uC				175J	Si	M1147
107	A447T	900	100uC				125J	Si	C245
108	DSR51	1.0k	70n						A60ae
109♦	DSR31000X	1.0k	70n						A266c
110♦	DSR51000X	1.0k	70n						A196f
111▼	BYT75-1000	1.0k	200n					Si	D08
112	424EF2AH1	1.0k	250n				125	Si	M1233
113	426EH2AB1	1.0k	250n				125	Si	A69ak
114	S15C	1.0k	.30u				140S	Si	A331
115	UF1C	1.0k	.30u				130S	Si	A271d
116▼	BYX62-1000	1.0k	450n					Si	T039
117▼	BYX63-1000	1.0k	450n					Si	T039
118▼	BYX64-1000	1.0k	450n					Si	T039
119▼	ESM244-1000	1.0k	450n					Si	T039
120▼	SF0310	1.0k	450n					Si	T039
121▼	SF0610	1.0k	450n					Si	T039
122	363Z	1.0k	500n				150J		DO27
123	388Z	1.0k	500n				150J		DO15
124	FR157	1.0k	500n				175A		DO15
125♦	FR507	1.0k	500n				175		Alaba
126	ICR1007	1.0k	500n				175	Si	DO41
127	ICR1507	1.0k	500n				175	Si	DO41
128	ICR3007	1.0k	500n				175	Si	DO27
129	ICR6007	1.0k	500n				175	Si	A398j
130	MR1007	1.0k	500n				175J	Si	DO41
131	MR3007	1.0k	500n				175J	Si	DO27
132▼	RL107F	1.0k	500n				175A	Si	A395
133▼	RL107FG	1.0k	500n				175A	Si	D015
134▼	RP110	1.0k	500n					Si	DO41
135▼	RP610	1.0k	500n					Si	Aleg
136▼	RP1510	1.0k	500n					Si	DO15
137	A337P	1.0k	2.0u				125J	Si	M1147
138	DSF1108SM10	1.0k	2.6u				150C	Si	
139▼	SF10010	1.0k	3.0u					Si	D08
140▼	SF15010	1.0k	3.0u					Si	D08
141▼	SF27510	1.0k	3.0u					Si	D09
142	A198P	1.0k	42uC				175	Si	S534Ø
143	A398P	1.0k	42uC				175J	Si	M1147
144	A447P	1.0k	100uC				125J	Si	C245
145▼	1N4948G	1.0k	500				175A	Si	D041
146	A337PA	1.1k	2.0u				125J	Si	M1147
147	DSF1108SM11	1.1k	2.6u				150C	Si	
148	A198PA	1.1k	42uC				175	Si	S534Ø
149	A398PA	1.1k	42uC				175J	Si	M1147
150	A447PA	1.1k	100uC				125J	Si	C245
151	A337PB	1.2k	2.0u				125J	Si	M1147
152	DSF1108SM12	1.2k	2.6u				150C	Si	
153▼	SF10012	1.2k	3.0u					Si	D08
154▼	SF15012	1.2k	3.0u					Si	D08
155▼	SF27512	1.2k	3.0u					Si	D09
156	A198PB	1.2k	42uC				175J		S534#
157	A398PB	1.2k	42uC				175J	Si	M1147
158	A447PB	1.2k	100uC				125J	Si	C245
159	A337PC	1.3k	2.0u				125J	Si	M1147
160	DSF2013SD13	1.3k	5.8u				175J	Si	M985
161	A198PC	1.3k	42uC				175J		S534Ø
162	A398PC	1.3k	42uC				175J	Si	M1147
163	A447PC	1.3k	100uC				125J	Si	C245
164	A337PD	1.4k	2.0u				125J	Si	M1147
165	DSF2013SD14	1.4k	5.8u				175J	Si	M985
166	A198PD	1.4k	42uC				175J		S534Ø
167	A398PD	1.4k	42uC				175J	Si	M1147
168	A447PD	1.4k	100uC				125J	Si	C245
169	424EF3AH1	1.5k	250n				125	Si	M1233
170	426EH3AB1	1.5k	250n				125	Si	A69am
171	A337PE	1.5k	2.0u				125J	Si	M1147
172	DSF2013SD15	1.5k	5.8u				175J	Si	M985
173	A198PE	1.5k	42uC				175J		S534Ø
174	A398PE	1.5k	42uC				175J	Si	M1147
175	A447PE	1.5k	100uC				125J	Si	C245
176	DSF2013SD16	1.6k	5.8u				175J	Si	M985
177	426EH4AB1	2.0k	250n				125	Si	A69am
178	426EH6AB1	3.0k	250n				125	Si	A69au
179	RHP3	3.0k	300n				150A	Si	M239u
180	DSF1114SM31	3.1k	6.5u				175J	Si	M757
181	DSF1114SM32	3.2k	6.5u				175J	Si	M757
182	DSF1114SM33	3.3k	6.5u				175J	Si	M757
183	DSF1114SM34	3.4k	6.5u				175J	Si	M757
184	DSF1114SM35	3.5k	6.5u				175J	Si	M757
185	DSF1114SM36	3.6k	6.5u				175J	Si	M757
186	426EH8AB1	4.0k	250n				125	Si	A69an
187	RHP4	4.0k	300n				150A	Si	M239v
188	426EH10AB1	5.0k	250n				125	Si	A69ap
189	RHP5	5.0k	300n				150A	Si	M239w
190	RVP5	5.0k	300n				150A	Si	M239d
191	GHV06SS	6.0k	.18u				120S	Si	A313g
192	426EH12AB1	6.0k	250n				125	Si	A69ar
193	RHP6	6.0k	300n				150A	Si	M239x
194	RVP6	6.0k	300n				150A	Si	M239d
195	RHP7	7.0k	300n				150A	Si	M239y
196	RVP7	7.0k	300n				150A	Si	M239e
197	426EH16AB1	8.0k	250n				125	Si	A69as
198	RHC5-8	8.0k	250n				150	Si	A1td
199	RHC10-8	8.0k	250n				150	Si	A1td
200	RHC25-8	8.0k	250n				150	Si	A1td
201	RHP8	8.0k	300n				150A	Si	M239z
202	RVP8	8.0k	300n				150A	Si	M239e
203	HV08	8.0k	.50u				110S	Si	A3af
204	RHP9	9.0k	300n				150A	Si	
205	RVP9	9.0k	300n				150A	Si	M239e
206	426EH20AB1	10k	250n				125	Si	A69at
207	RHC5-10	10k	250n				150	Si	A1td
208	RHC10-10	10k	250n				150	Si	A1td
209	RHC25-10	10k	250n				150	Si	A1td
210	RHP10	10k	300n				150A	Si	
211	RVP10	10k	300n				150A	Si	M239f
212	RHC5-12	12k	250n				150	Si	A1td
213	RHC10-12	12k	250n				150	Si	A1td
214	RHC25-12	12k	250n				150	Si	A1td
215	RHC5-15	15k	250n				150	Si	A1te
216	RHC10-15	15k	250n				150	Si	A1te
217	RHC25-15	15k	250n				150	Si	A1te
218	RHP15	15k	300n				150A	Si	
219	RVP15	15k	300n				150A	Si	M239g
220	RHC5-20	20k	250n				150	Si	A1te

SYMBOLS AND CODES EXPLAINED IN INTERPRETER

4. HIGH-SPEED DIODES - Fast Recovery/Switching (Cont'd)

IN ORDER OF: (1) IF TEST (2) PIV
(3) trr & (4) & VF & (5) TYPE NUMBER

LINE No.	5 TYPE NO.	2 PIV (V)	RECOVERY TIME 3 trr (s)	TEST CONDITIONS 1 IF (A)	4 VR (V)	IR (A)	MAX. TEMP (°C)	MAT.	DRAWING NO.
1	RHC10-20	20k	250n				150	Si	A1te
2	RHC25-20	20k	250n				150	Si	A1te
3	RHP20	20k	300n				150A	Si	
4	RVP20	20k	300n				150A	Si	M239h
5	RHC5-25	25k	250n				150	Si	A1te
6	RHC10-25	25k	250n				150	Si	A1te
7	RHC25-25	25k	250n				150	Si	A1te
8	RHP25	25k	300n				150A	Si	
9	RVP25	25k	300n				150A	Si	M239j
10	RHC5-30	30k	250n				150	Si	A1tf
11	RHC10-30	30k	250n				150	Si	A1tf
12	RHC25-30	30k	250n				150	Si	A1tf
13	RHP30	30k	300n				150A	Si	
14	RVP30	30k	300n				150A	Si	M239j
15	RHC5-35	35k	250n				150	Si	A1tf
16	RHC10-35	35k	250n				150	Si	A1tf
17	RHC25-35	35k	250n				150	Si	A1tf
18	RHP35	35k	300n				150A	Si	
19	RVP35	35k	300n				150A	Si	M239k
20	1N5389	40k	200n				125A	Si	A1m
21	RHC5-40	40k	250n				150	Si	A1tf
22	RHC10-40	40k	250n				150	Si	A1tf
23	RHC25-40	40k	250n				150	Si	A1tf
24	RHP40	40k	300n				150A	Si	
25	RVP40	40k	300n				150A	Si	M239k
26	RHP45	45k	300n				150A	Si	
27	RVP45	45k	300n				150A	Si	M239l
28	RHP50	50k	300n				150A	Si	
29	RVP50	50k	300n				150A	Si	M239l
30	Q40-200	45	5.0n	10n		1.0m	75A		DO7
31	KD522B	50	4.0n	10n	10	2.0m	125A	Si#$	A159a
32	MB200	40	20n	1.0m		500u	175A	Si	A60f
33	MB207	40	20n	1.0m		500u	175A	Si	A60f
34	MB201	65	20n	1.0m		500u	175A	Si	A60f
35	MB208	65	20n	1.0m		500u	175A	Si	A60f
36	MB202	90	20n	1.0m		500u	175A	Si	A60f
37	MB209	90	20n	1.0m		500u	175A	Si	A60f
38	MB204	135	20n	1.0m		500u	175A	Si	A60f
39	MB211	135	20n	1.0m		500u	175A	Si	A60f
40	MB206	185	20n	1.0m		500u	175A	Si	A60f
41	MB213	185	20n	1.0m		500u	175A	Si	A60f
42♦	RTF40	400	300n	1.0m	30		140J	Si	TO220AB
43♦	BYT71-600	600	300n	1.0m	30		125J	Si	TO220AB
44	Q4-100	4.0	1.0n	1.6m	3.0		75A	GeØ	DO7
45	Q4-500	4.0	8.0n	1.6m	3.0		75A	GeØ	DO7
46	Q5-250	5.0	1.0n	1.6m	3.0		75A	GeØ	DO7
47	Q6-250	6.0	5.0n	1.6m	3.0		75A	GeØ	DO7
48	Q6-500	6.0	8.0n	1.6m	3.0		75A	GeØ	DO7
49	Q10-250	10	5.0n	1.6m	3.0		75A	Ge	DO7
50	Q10-750	10	12n	1.6m	3.0		75A	GeØ	DO7
51	Q10-950	10	15n	1.6m	3.0		75A	GeØ	DO7
52	Q20-500	20	8.0n	1.6m	3.0		75A	GeØ	DO7
53	Q20-750	20	12n	1.6m	3.0		75A	GeØ	DO7
54	Q20-950	20	15n	1.6m	3.0		75A	GeØ	DO7
55	Q30-750	30	12n	1.6m	3.0		75A	GeØ	DO7
56	Q30-950	30	15n	1.6m	3.0		75A	GeØ	DO7
57	Q40-750	40	12n	1.6m	3.0		75A	GeØ	DO7
58	Q40-950	40	15n	1.6m	3.0		75A	GeØ	DO7
59	Q50-750	50	12n	1.6m	3.0		75A	GeØ	DO7
60	Q50-950	50	15n	1.6m	3.0		75A	GeØ	DO7
61	Q60-750	60	12n	1.6m	3.0		75A	GeØ	DO7
62	Q60-950	60	15n	1.6m	3.0		75A	GeØ	DO7
63	1N3110		75nC	2.0m		200u	90S	GeØ	DO7
64	1N3773	25	40n	2.0m		20m	100S	GeØ	DO7
65	1N4381	25	100n	2.0m		200u	100S	Ge	DO7
66	1N3592	30	40n	2.0m		200u	100S	Ge	DO7
67	1N4827	30	200n	2.0m	10		100S	Ge	DO7
68	W09A	50	400n	2.0m	15		165J	Si	A277p
69	U19B	100	200n	2.0m	15		150J	Si	A94m
70	V19B	100	200n	2.0m	15		150J	Si	A94z
71	MRF100	100	250n	2.0m		4.0m	150S	SiΔ	A1dk
72	1N198B	100	300n	2.0m	6.0		90A	GeØ	DO7
73	W09B	100	400n	2.0m	15		165J	Si	A277p
74	U19C	200	200n	2.0m	15		150J	Si	A94m
75	V19C	200	200n	2.0m	15		150J	Si	A94z
76	HX2PA	200	250n	2.0m		2.0m	125A	Si	A94q
77	MRF200	200	250n	2.0m		4.0m	150S	SiΔ	A1dk
78	U06C	200	400n	2.0m	15		150J	Si	A333b
79	V09C	200	400n	2.0m	15		165J	Si	A333
80	W09C	200	400n	2.0m	15		165J	Si	A277p
81	SM-1-02FRA	200	500n	2.0m	15		140J	Si	A298a
82	PLR2T	200	800n	2.0m		2.0m		Si	A1bg
83	HF-1Z	200	1.0u	2.0m	15			SiΔ	A271c
84	U19E	400	200n	2.0m	15		150J	Si	A94m
85	V19E	400	200n	2.0m	15		150J	Si	A94z
86	HX4PA	400	250n	2.0m		2.0m	125A	Si	A94q
87	MRF400	400	250n	2.0m		4.0m	150S	SiΔ	A1dk
88	U06E	400	400n	2.0m	15		150J	Si	A333b
89	V09E	400	400n	2.0m	15		165J	Si	A333
90	SM-1-04FRA	400	500n	2.0m	15		140J	Si	A298a
91	HF-1	400	1.0u	2.0m	15			SiΔ	A271c
92	S-34	500	300n	2.0m	15			Si	A268d
93	V19G	600	200n	2.0m	15		150J	SiΔ	A94z
94	HX6PA	600	250n	2.0m		2.0m	125A	Si	A94q
95	MRF600	600	250n	2.0m		4.0m	150S	SiΔ	A1dk
96	UF-2	600	300n	2.0m	15			Si	A271e
97	U06G	600	400n	2.0m	15		150J	Si	A333b
98	V09G	600	400n	2.0m	15		165J	Si	A333
99	SM-1-06FRA	600	500n	2.0m	15		140J	Si	A298a
100	HF-1A	600	1.0u	2.0m	15			SiΔ	A271c
101	HX8PA	800	250n	2.0m		2.0m	125A	Si	A94q
102	MRF800	800	250n	2.0m		4.0m	150S	SiΔ	A1dk
103	U06J	800	400n	2.0m	15		150J	Si	A333b
104	U07J	800	400n	2.0m	15		140J	Si	A333b
105	V11J	800	400n	2.0m	15		150J	Si	A333
106	V31J	800	400n	2.0m	15		150J	SiΔ	A313d
107	SM-1-08FRA	800	500n	2.0m	15		140J	Si	A298a
108	PLR8T	800	800n	2.0m		2.0m		Si	A1bg
109	HF-1B	800	1.0u	2.0m	15			SiΔ	A271c
110	BR427-10	1.0k	250n	2.0m		4.0m		SiΔ	A50f
111	BR587-10	1.0k	250n	2.0m		4.0m		SiΔ	A69r
112	HX10E	1.0k	250n	2.0m		2.0m	125A	Si	A1xe
113	HX10K	1.0k	250n	2.0m		2.0m	125A	Si	A1fe
114	HX10M	1.0k	250n	2.0m		2.0m	125A	Si	A1xd
115	HX10P	1.0k	250n	2.0m		2.0m	125A	Si	A94q
116	HX10PA	1.0k	250n	2.0m		2.0m	125A	Si	A94q
117	MRF1000	1.0k	250n	2.0m		4.0m	150S	SiΔ	A1dk
118	VG1X	1.0k	250n	2.0m		4.0m	85A	SiΔ	A298j
119	VA10X	1.0k	300n	2.0m		4.0m	85A	Si	A1m
120	VB10X	1.0k	300n	2.0m		4.0m	85A	Si	A298m
121	3DF10	1.0k	350n	2.0m		4.0m	150S	Si	A109d
122	U07L	1.0k	400n	2.0m	15		140J	Si	A333b
123	V11L	1.0k	400n	2.0m	15		150J	Si	A333
124	V31L	1.0k	400n	2.0m	15		150J	SiΔ	A313d
125	SM-1-10FRA	1.0k	500n	2.0m	15		140J	Si	A298a
126	HF-1C	1.0k	1.0u	2.0m	15			SiΔ	A271c
127	MRF1200	1.2k	250n	2.0m		4.0m	150S	SiΔ	A1dk
128	3DF12	1.2k	350n	2.0m		4.0m	150S	Si	A109d
129	U07M	1.3k	400n	2.0m	15		140J	Si	A333b
130	V11M	1.3k	400n	2.0m	15		150J	Si	A333
131	V31M	1.3k	400n	2.0m	15		150J	SiΔ	A313d
132	BR427-15	1.5k	250n	2.0m		4.0m		SiΔ	A50f
133	BR587-15	1.5k	250n	2.0m		4.0m		SiΔ	A69r
134	HX15PD	1.5k	250n	2.0m		2.0m	125A	Si	A94q
135	MRF1500	1.5k	250n	2.0m		4.0m	150S	SiΔ	A1dk
136	1N4441	1.5k	300n	2.0m		2.0m	150A	SiΔ	A1fm
137	VA15X	1.5k	300n	2.0m		4.0m	85A	Si	A1m
138	3DF15	1.5k	350n	2.0m		4.0m	150S	Si	A109d
139	U07N	1.5k	400n	2.0m	15		140J	Si	A333b
140	V11N	1.5k	400n	2.0m	15		150J	Si	A333
141	V31N	1.5k	400n	2.0m	15		150J	SiΔ	A313d
142	PLR15T	1.5k	800n	2.0m		2.0m		Si	A1bg
143	10F20	2.0k	250n	2.0m		4.0m	150S	Si	A1df
144	50F20	2.0k	250n	2.0m		4.0m	150S	Si	A1df
145	100F20	2.0k	250n	2.0m		4.0m	150A	SiΔ	A1dkØ
146	100S20	2.0k	250n	2.0m		4.0m	150A	SiΔ	A1dkØ
147	BR427-20	2.0k	250n	2.0m		4.0m		SiΔ	A50f
148	BR587-20	2.0k	250n	2.0m		4.0m		SiΔ	A69r
149	HX20E	2.0k	250n	2.0m		2.0m	125A	Si	A1xe
150	HX20K	2.0k	250n	2.0m		2.0m	125A	Si	A1fe
151	HX20M	2.0k	250n	2.0m		2.0m	125A	Si	A1xd
152	HX20P	2.0k	250n	2.0m		2.0m	125A	Si	A94q
153	HX20PD	2.0k	250n	2.0m		2.0m	125A	Si	A94q
154	VG2X	2.0k	250n	2.0m		4.0m	85A	SiΔ	A298j
155	VA20X	2.0k	300n	2.0m		4.0m	85A	Si	A1m
156	VB20X	2.0k	300n	2.0m		4.0m	85A	Si	A298m
157	3DF20	2.0k	350n	2.0m		4.0m	150S	Si	A109d
158	HC-2	2.0k	800n	2.0m	15			SiΔ	A271e
159	BR427-25	2.5k	250n	2.0m		4.0m		SiΔ	A50f
160	BR587-25	2.5k	250n	2.0m		4.0m		SiΔ	A69r
161	HX25PD	2.5k	250n	2.0m		2.0m	125A	Si	A94q
162	VA25X	2.5k	300n	2.0m		4.0m	85A	Si	A1m
163	3DF25	2.5k	350n	2.0m		4.0m	150S	Si	A109d
164	1JK30	3.0k	55n	2.0m		5.0m	120J		A1fd
165	10F30	3.0k	250n	2.0m		4.0m	150S	Si	A1df
166	50F30	3.0k	250n	2.0m		4.0m	150S	Si	A1df
167	100S30	3.0k	250n	2.0m		4.0m	150A	SiΔ	A1dkØ
168	BR427-30	3.0k	250n	2.0m		4.0m		SiΔ	A50f
169	BR587-30	3.0k	250n	2.0m		4.0m		SiΔ	A69r
170	HX30E	3.0k	250n	2.0m		2.0m	125A	Si	A1xe
171	HX30K	3.0k	250n	2.0m		2.0m	125A	Si	A1fe
172	HX30M	3.0k	250n	2.0m		2.0m	125A	Si	A1xd
173	HX30P	3.0k	250n	2.0m		2.0m	125A	Si	A94q
174	HX30PD	3.0k	250n	2.0m		2.0m	125A	Si	A94q
175	VG3X	3.0k	250n	2.0m		4.0m	85A	SiΔ	A298j
176	CRHG3	3.0k	300n	2.0m		4.0m	125J		A69t
177	VA30X	3.0k	300n	2.0m		4.0m	85A	Si	A1m
178	VB30X	3.0k	300n	2.0m		4.0m	85A	Si	A298m
179	3DF30	3.0k	350n	2.0m		4.0m	150S	Si	A109d
180	BR427-35	3.5k	250n	2.0m		4.0m		SiΔ	A50f
181	BR587-35	3.5k	250n	2.0m		4.0m		SiΔ	A69r
182	10F40	4.0k	250n	2.0m		4.0m	150S	Si	A1df
183	50F40	4.0k	250n	2.0m		4.0m	150S	Si	A1df
184	100S40	4.0k	250n	2.0m		4.0m	150A	SiΔ	A1dkØ
185	BR427-40	4.0k	250n	2.0m		4.0m		SiΔ	A50f
186	BR587-40	4.0k	250n	2.0m		4.0m		SiΔ	A69r
187	HX40E	4.0k	250n	2.0m		2.0m	125A	Si	A1xe
188	HX40K	4.0k	250n	2.0m		2.0m	125A	Si	A1fe
189	HX40M	4.0k	250n	2.0m		2.0m	125A	Si	A1xd
190	HX40P	4.0k	250n	2.0m		2.0m	125A	Si	A94q
191	VG4X	4.0k	250n	2.0m		4.0m	85A	SiΔ	A298j
192	CRHG4	4.0k	300n	2.0m		4.0m	125J		A69t
193	DR400	4.0k	300n	2.0m		5.0m	125A	Si	A1wj
194	VB40X	4.0k	300n	2.0m		4.0m	85A	Si	A298m
195	BR427-45	4.5k	250n	2.0m		4.0m		SiΔ	A50f
196	BR587-45	4.5k	250n	2.0m		4.0m		SiΔ	A69r
197	10F50	5.0k	250n	2.0m		4.0m	150S	Si	A1df
198	50F50	5.0k	250n	2.0m		4.0m	150S	Si	A1df
199	100S50	5.0k	250n	2.0m		4.0m	150A	SiΔ	A1dkØ
200	BR412-5-10	5.0k	250n	2.0m		4.0m		Si	A344e
201	BR412-5-25	5.0k	250n	2.0m		4.0m		Si	A344e
202	BR412-5-5	5.0k	250n	2.0m		4.0m		Si	A344e
203	BR427-50	5.0k	250n	2.0m		4.0m		SiΔ	A50f
204	BR587-50	5.0k	250n	2.0m		4.0m		SiΔ	A69r
205	HX50E	5.0k	250n	2.0m		2.0m	125A	Si	A1xe
206	HX50K	5.0k	250n	2.0m		2.0m	125A	Si	A1fe
207	HX50M	5.0k	250n	2.0m		2.0m	125A	Si	A1xd
208	HX50P	5.0k	250n	2.0m		2.0m	125A	Si	A94q
209	SF5#B	5.0k	250n	2.0m		4.0m	125	SiΔ	A344uØ
210	SP5F	5.0k	250n	2.0m		4.0m	150S	Si	A267e
211♦	VF5X	5.0k	250n	2.0m		4.0m	150S	Si	Alaac
212	VG5X	5.0k	250n	2.0m		4.0m	85A	SiΔ	A298j
213	CLR5	5.0k	300n	2.0m		4.0m	150S	SiΔ	A83cz
214	CRHG5	5.0k	300n	2.0m		4.0m	125J		A69t
215	VB50X	5.0k	300n	2.0m		4.0m	85A	Si	A298m
216	BR427-55	5.5k	250n	2.0m		4.0m		SiΔ	A50f
217	BR587-55	5.5k	250n	2.0m		4.0m		SiΔ	A69r
218	1JK60	6.0k	55n	2.0m		5.0m	120J		A1fd
219	BR427-60	6.0k	250n	2.0m		4.0m		SiΔ	A50f
220	BR587-60	6.0k	250n	2.0m		4.0m		SiΔ	A69r

SYMBOLS AND CODES EXPLAINED IN INTERPRETER

4. HIGH-SPEED DIODES – Fast Recovery/Switching (Cont'd)

IN ORDER OF: (1) IF TEST (2) PIV
(3) trr & (4) & VF & (5) TYPE NUMBER

LINE No.	5 TYPE NO.	2 PIV (V)	3 RECOVERY TIME trr (s)	TEST CONDITIONS 1 IF (A)	4 VR (V)	IR (A)	MAX. TEMP (°C)	MAT.	DRAWING NO.
1	HX60EL	6.0k	250n	2.0m		2.0m	125A	Si	A1xe
2	HX60KL	6.0k	250n	2.0m		2.0m	125A	Si	A1fe
3	HX60ML	6.0k	250n	2.0m		2.0m	125A	Si	A1xd
4	SP6F	6.0k	250n	2.0m		4.0m	150S	Si	A267e
5	CRHG6	6.0k	300n	2.0m		4.0m	125J		A69t
6	DR600	6.0k	300n	2.0m		5.0m	125A	Si	A1wj
7	BR427-65	6.5k	250n	2.0m		4.0m		SiΔ	A50f
8	BR587-65	6.5k	250n	2.0m		4.0m		SiΔ	A69r
9	BR412-7-10	7.0k	250n	2.0m		4.0m		Si	A344e
10	BR412-7-25	7.0k	250n	2.0m		4.0m		Si	A344e
11	BR412-7-5	7.0k	250n	2.0m		4.0m		Si	A344e
12	BR427-70	7.0k	250n	2.0m		4.0m		SiΔ	A50f
13	BR587-70	7.0k	250n	2.0m		4.0m		SiΔ	A69r
14	HX70EL	7.0k	250n	2.0m		2.0m	125A	Si	A1xe
15	SP7F	7.0k	250n	2.0m		4.0m	150S	Si	A267e
16♦	VF7X	7.0k	250n	2.0m		4.0m	150S	Si	Alaac
17	VG7X	7.0k	250n	2.0m		4.0m	85A	SiΔ	A298j
18	CRHG7	7.0k	300n	2.0m		4.0m	125J		A69t
19	DR700	7.0k	300n	2.0m		5.0m	125A	Si	A1wj
20	BR587-80	8.0k	250n	2.0m		4.0m		SiΔ	A69r
21	HX80EL	8.0k	250n	2.0m		2.0m	125A	Si	A1xe
22	HX80EN	8.0k	250n	2.0m		2.0m	125A	Si	A1xe
23	HX80KL	8.0k	250n	2.0m		2.0m	125A	Si	A1fe
24	HX80ML	8.0k	250n	2.0m		2.0m	125A	Si	A1xd
25	HX80TN	8.0k	250n	2.0m		2.0m	125A	Si	A1xf
26	JKV8F	8.0k	250n	2.0m		4.0m	100A		A432
27	SLF8	8.0k	250n	2.0m		4.0m	150S	Si	A344x
28	SP8F	8.0k	250n	2.0m		4.0m	150S	Si	A267e
29	CRHG8	8.0k	300n	2.0m		4.0m	125J		A69t
30	DR800	8.0k	300n	2.0m		5.0m	125A	Si	A1wj
31	BR587-85	8.5k	250n	2.0m		4.0m		SiΔ	A69r
32	1JK90	9.0k	150n	2.0m			120J		A1fd
33	BR587-90	9.0k	250n	2.0m		4.0m		SiΔ	A69r
34	SP9F	9.0k	250n	2.0m		4.0m	150S	Si	A267e
35	CRHG9	9.0k	300n	2.0m		4.0m	125J		A69t
36	DR900	9.0k	300n	2.0m		5.0m	125A	Si	A1wj
37	BR587-95	9.5k	250n	2.0m		4.0m		SiΔ	A69r
38	1JK100	10k	55n	2.0m		5.0m	120J		A1fd
39	BR412-10-10	10k	250n	2.0m		4.0m		Si	A344e
40	BR412-10-25	10k	250n	2.0m		4.0m		Si	A344e
41	BR412-10-5	10k	250n	2.0m		4.0m		Si	A344e
42	BR587-100	10k	250n	2.0m		4.0m		SiΔ	A69r
43	BY187	10k	250n	2.0m		5.0u	85J	Si	A1wj
44	HX100EL	10k	250n	2.0m		2.0m	125A	Si	A1xe
45	HX100EN	10k	250n	2.0m		2.0m	125A	Si	A1xe
46	HX100EO	10k	250n	2.0m		2.0m	125A	Si	A1xe
47	HX100LO	10k	250n	2.0m		2.0m	125A	Si	A1me
48	HX100TN	10k	250n	2.0m		2.0m	125A	Si	A1xf
49	JKV10F	10k	250n	2.0m		4.0m	100A		A432
50	SF10#B	10k	250n	2.0m		4.0m	125	SiΔ	A344uØ
51	SLF10	10k	250n	2.0m		4.0m	150S	Si	A344x
52	SP10F	10k	250n	2.0m		4.0m	150S	Si	A267e
53♦	VB100X	10k	250n	2.0m		5.0	85A	Si	A298m
54♦	VF10X	10k	250n	2.0m		4.0m	150S	Si	Alaac
55	VG10X	10k	250n	2.0m		4.0m	85A	SiΔ	A298j
56	CLR10	10k	300n	2.0m		4.0m	150S	SiΔ	A83cz
57	CRHG10	10k	300n	2.0m		4.0m	125J		A69t
58	DR1000	10k	300n	2.0m		5.0m	125A	Si	A1wj
59	BR587-110	11k	250n	2.0m		4.0m		SiΔ	A69r
60	SP11F	11k	250n	2.0m		4.0m	150S	Si	A267e
61	1JK120	12k	55n	2.0m		5.0m	120J		A1fd
62	BR412-12-10	12k	250n	2.0m		4.0m		Si	A344e
63	BR412-12-25	12k	250n	2.0m		4.0m		Si	A344e
64	BR412-12-5	12k	250n	2.0m		4.0m		Si	A344e
65	BR587-120	12k	250n	2.0m		4.0m		SiΔ	A69r
66	BY187-01	12k	250n	2.0m		5.0u	85J	Si	A1wj
67	HS125EO	12k	250n	2.0m		2.0m	125A	Si	A1xe
68	HS125FO	12k	250n	2.0m		2.0m	125A	Si	F12av
69	HS125LO	12k	250n	2.0m		2.0m	125A	Si	A1me
70	HS125TO	12k	250n	2.0m		2.0m	125A	Si	A1xf
71	HX120EO	12k	250n	2.0m		2.0m	125A	Si	A1xe
72	HX120LO	12k	250n	2.0m		2.0m	125A	Si	A1me
73	HX120TN	12k	250n	2.0m		2.0m	125A	Si	A1xf
74	JKV12F	12k	250n	2.0m		4.0m	100A		A432
75	SP12F	12k	250n	2.0m		4.0m	150S	Si	A267e
76♦	VF12X	12k	250n	2.0m		4.0m	150S	Si	Alaac
77	VG12X	12k	250n	2.0m		4.0m	85A	SiΔ	A298j
78	DR1200	12k	300n	2.0m		5.0m	125A	Si	A1wj
79	BR587-130	13k	250n	2.0m		4.0m		SiΔ	A69r
80	BR587-140	14k	250n	2.0m		4.0m		SiΔ	A69r
81	HX140EO	14k	250n	2.0m		2.0m	125A	Si	A1xe
82	HX140LO	14k	250n	2.0m		2.0m	125A	Si	A1me
83	1JK150	15k	55n	2.0m		5.0m	120J		A1fd
84	CRT15	15k	100n	2.0m		4.0m	150	Si	A344y
85	BR412-15-10	15k	250n	2.0m		4.0m		Si	A344z
86	BR412-15-25	15k	250n	2.0m		4.0m		Si	A344z
87	BR412-15-5	15k	250n	2.0m		4.0m		Si	A344z
88	BR587-150	15k	250n	2.0m		4.0m		SiΔ	A69r
89	HS150EO	15k	250n	2.0m		2.0m	125A	Si	A1xe
90	HS150FO	15k	250n	2.0m		2.0m	125A	Si	F12av
91	HS150LO	15k	250n	2.0m		2.0m	125A	Si	A1me
92	HS150TO	15k	250n	2.0m		2.0m	125A	Si	A1xf
93	SF15	15k	250n	2.0m		4.0m	125	SiΔ	A344uØ
94	SLF15	15k	250n	2.0m		4.0m	150S	Si	A344y
95♦	VB150X	15k	250n	2.0m		5.0	85A	Si	A298m
96♦	VF15X	15k	250n	2.0m		4.0m	150S	Si	Alaad
97	VG15X	15k	250n	2.0m		4.0m	85A	SiΔ	A298j
98	CLR15	15k	300n	2.0m		4.0m	150S	SiΔ	A1kz
99	TR15	15k	300n	2.0m		5.0m	85A	Si	A296
100	1JK160	16k	55n	2.0m		5.0m	120J		A1fd
101	BR587-160	16k	250n	2.0m		4.0m		SiΔ	A69r
102	HX160EP	16k	250n	2.0m		2.0m	125A	Si	A1xe
103	HX160LP	16k	250n	2.0m		2.0m	125A	Si	A1me
104	BR587-170	17k	250n	2.0m		4.0m		SiΔ	A69r
105	1JK180	18k	55n	2.0m		5.0m	120J		A1fd
106	BR587-180	18k	250n	2.0m		4.0m		SiΔ	A69r
107	HX180EP	18k	250n	2.0m		2.0m	125A	Si	A1xe
108	HX180LP	18k	250n	2.0m		2.0m	125A	Si	A1me
109	TR18	18k	300n	2.0m		5.0m	85A	Si	A296
110	BR587-190	19k	250n	2.0m		4.0m		SiΔ	A69r
111	CRT20	20k	100n	2.0m		4.0m	150	Si	A344y
112	BR412-20-10	20k	250n	2.0m		4.0m		Si	A344z
113	BR412-20-25	20k	250n	2.0m		4.0m		Si	A344z
114	BR412-20-5	20k	250n	2.0m		4.0m		Si	A344z
115	BR587-200	20k	250n	2.0m		4.0m		SiΔ	A69r
116	HX200EP	20k	250n	2.0m		2.0m	125A	Si	A1xe
117	HX200LP	20k	250n	2.0m		2.0m	125A	Si	A1me
118	SF20	20k	250n	2.0m		4.0m	125	SiΔ	A344vØ
119	SLF20	20k	250n	2.0m		4.0m	150S	Si	A344y
120♦	VF20X	20k	250n	2.0m		4.0m	150S	Si	Alaad
121	VG20X	20k	250n	2.0m		4.0m	85A	SiΔ	A298j
122	CLR20	20k	300n	2.0m		4.0m	150S	SiΔ	A1na
123	TR20	20k	300n	2.0m		5.0m	85A	Si	A296
124	TR22	22k	300n	2.0m		5.0m	85A	Si	A296
125	CRT25	25k	100n	2.0m		4.0m	150	Si	A344y
126	BR412-25-10	25k	250n	2.0m		4.0m		Si	A344z
127	BR412-25-25	25k	250n	2.0m		4.0m		Si	A344z
128	BR412-25-5	25k	250n	2.0m		4.0m		Si	A344z
129	SF25	25k	250n	2.0m		4.0m	125	SiΔ	A344vØ
130	SLF25	25k	250n	2.0m		4.0m	150S	Si	A344z
131♦	VF25X	25k	250n	2.0m		4.0m	150S	Si	Alaad
132	CLR25	25k	300n	2.0m		4.0m	150S	SiΔ	A1ny
133	CRT30	30k	100n	2.0m		4.0m	150	Si	A344y
134	BR412-30-10	30k	250n	2.0m		4.0m		Si	A298ak
135	BR412-30-25	30k	250n	2.0m		4.0m		Si	A298ak
136	BR412-30-5	30k	250n	2.0m		4.0m		Si	A298ak
137	HS300W	30k	250n	2.0m		2.0m	125A	Si	F119
138	SLF30	30k	250n	2.0m		4.0m	150S	Si	A1yu
139♦	VF30X	30k	250n	2.0m		4.0m	150S	Si	Alaae
140	CLR30	30k	300n	2.0m		4.0m	150S	SiΔ	A1pr
141	HS350W	35k	250n	2.0m		2.0m	125A	Si	F119
142	CLR35	35k	300n	2.0m		4.0m	150S	SiΔ	A1qd
143	BR412-40-10	40k	250n	2.0m		4.0m		Si	A298ak
144	BR412-40-25	40k	250n	2.0m		4.0m		Si	A298ak
145	BR412-40-5	40k	250n	2.0m		4.0m		Si	A298ak
146	HS400W	40k	250n	2.0m		2.0m	125A	Si	F119
147	SLF40	40k	250n	2.0m		4.0m	150S	Si	A267d
148♦	VF40X	40k	250n	2.0m		4.0m	150S	Si	Alaae
149	CLR40	40k	300n	2.0m		4.0m	150S	SiΔ	A1qs
150	HS450W	45k	250n	2.0m		2.0m	125A	Si	F119
151	SLF45	45k	250n	2.0m		4.0m	150S	Si	A1yv
152	CLR45	45k	300n	2.0m		4.0m	150S	SiΔ	A1rc
153	BR412-50-10	50k	250n	2.0m		4.0m		Si	A298am
154	BR412-50-25	50k	250n	2.0m		4.0m		Si	A298am
155	BR412-50-5	50k	250n	2.0m		4.0m		Si	A298am
156♦	VF50X	50k	250n	2.0m		4.0m	150S	Si	Alaae
157	CLR50	50k	300n	2.0m		4.0m	150S	SiΔ	A1rh
158	1N3944	15	12n	3.0m		10m	85S	Ge	DO7
159	1N419		300n	5.0m	40	1.6m	75A		
160	AD516A	10	5.0nC	5.0m	10		100A	GaØ	F123
161	AD516B	10	5.0nC	5.0m	10		100A	GaØ	F123
162	1N813	15	250n	5.0m	10	500u	150A	Si	DO7
163	1N815	15	250n	5.0m	10	500u	150A	Si	DO7
164	HMG813	15	250n	5.0m	10	.50m		Si	F133a
165	1N698	15	500n	5.0m	5.0			Ge	DO7
166	1N1093	15	500n	5.0m	5.0			Ge	DO7
167	1N252	20	150n	5.0m	10		150A	Si	A1
168	HMG252	20	150n	5.0m	10	.25m		Si	F133a
169	1N811	20	250n	5.0m	10	500u	150A	Si	DO7
170	HMG811	20	250n	5.0m	10	.50m		Si	F133a
171	1N695	20	300n	5.0m	20		90	GeØ	DO7
172	1N996	20	300n	5.0m	10	.50m	100A	Ge	DO7
173	1N770	20	350n	5.0m	10		90S	Ge†	
174	1N251	30	150n	5.0m	10		150A	Si	A1
175	1N3668	30	150n	5.0m	10		150A	Si	DO7
176	HMG251	30	150n	5.0m	10	.50m		Si	F133a
177	1N790	30 *	250n	5.0m	20		200A	SiΔ	A60p
178	1N812	30	250n	5.0m	10	500u	150A	Si	DO7
179	HMG790	30	250n	5.0m	20			Si	F133a
180	HMG812	30	250n	5.0m	10	.50m		Si	F133a
181	1N3197	30	300n	5.0m	10	200u	90A	Ge	DO7
182	1N789	30 *	500n	5.0m	20		200A	SiΔ	A60p
183	1N791	30 *	500n	5.0m	20		200A	SiΔ	A60p
184	1N792	30 *	500n	5.0m	20		200A	SiΔ	A60p
185	1N835	30	500n	5.0m	10		80S	Ge	DO7
186	DR852	30 *	500n	5.0m	20			Si	DO7
187	HMG789	30	500n	5.0m	20			Si	F133a
188	HMG791	30	500n	5.0m	20			Si	F133a
189	HMG792	30	500n	5.0m	20			Si	F133a
190	1S2473	35	2.0n	5.0m	6.0		175J	Si	DO35
191	1SS134	35	3.0n	5.0m	6.0		125J	Si$#	DO34
192	1N925	40	150n	5.0m	10		150A	Si	A60p
193	1N926	40	150n	5.0m	10		150A	Si	A60p
194	HMG925	40	150n	5.0m	10			Si	F133a
195	HMG926	40	150n	5.0m	10			Si	F133a
196	PS7267	40	150n	5.0m	10	10m	200A	SiΔ	DO14
197	PS7268	40	150n	5.0m	10	10m	200A	SiΔ	DO14
198	1N814	40	250n	5.0m	10	500u	150A	Si	DO7
199	HMG814	40	250n	5.0m	10	.50m		Si	F133a
200	1N3225	40	500n	5.0m	10		90S	Ge	DO7
201	1S2472	50	2.0n	5.0m	6.0		175J	Si	DO35
202	PS7269	50	130n	5.0m	40		200S	SiΔ	DO14
203	1N276	50	300n	5.0m	40	5.0m	90A	GeØ	DO7
204	1N898	50	300n	5.0m	40		150A	Si	A2e
205	HMG898	50	300n	5.0m	40			Si	F133a
206	PM021	50	300n	5.0m	40		150A		M163
207	1N897	50	1.0u	5.0m	40		150A	Si	A2e
208	HMG897	50	1.0u	5.0m	40			Si	F133a
209	PM1	50	1.0u	5.0m	40		150A		M163
210	1N3125	55	1.0p	5.0m	20		90S	Ge	DO7
211	MT200	55	200n	5.0m	40				A60e
212	MT207	55	200n	5.0m	40				A60e
213	1N794	60 *	250n	5.0m	40		200A	SiΔ	A60p
214	1N3215	60	250n	5.0m	5.0			Si	DO7
215	HMG794	60	250n	5.0m	40			Si	F133a
216	MC794	60	250n	5.0m	40		175A		A2c
217	1N417	60	300n	5.0m	40		75A	Ge	DO7
218	1N418	60	300n	5.0m	40		75A	Ge	DO7
219	1N631	60 $	300n	5.0m	40	.50m	55A	Ge	DO7
220	1N632	60	300n	5.0m	40	.80m		Ge	DO7

SYMBOLS AND CODES EXPLAINED IN INTERPRETER

4. HIGH-SPEED DIODES - Fast Recovery/Switching (Cont'd)

IN ORDER OF: (1) IF TEST (2) PIV (3) trr & (4) & VF & (5) TYPE NUMBER

LINE No.	5 TYPE NO.	2 PIV (V)	RECOVERY TIME 3 trr (s)	TEST CONDITIONS 1 IF (A)	4 VR (V)	IR (A)	MAX. TEMP (°C)	MAT.	DRAWING NO.
1	HMG891	60	300n	5.0m	40			Si	F133a
2	MC891	60	300n	5.0m	40		175A		A2c
3	1N793	60 *	500n	5.0m	40		200A	SiΔ	A60p
4	1N795	60 *	500n	5.0m	40		200A	SiΔ	A60p
5	1N796	60 *	500n	5.0m	40		200A	SiΔ	A60p
6	HMG793	60	500n	5.0m	40			Si	F133a
7	HMG795	60	500n	5.0m	40			Si	F133a
8	HMG796	60	500n	5.0m	40			Si	F133a
9	MC795	60	500n	5.0m	40		175A		A2c
10	MC796	60	500n	5.0m	40		175A		A2c
11	1N927	65	150n	5.0m	10		150A	Si	A60p
12	HMG927	65	150n	5.0m	10			Si	F133a
13	1S2471	80	2.0n	5.0m	6.0		175J	Si	DO35
14	1N662	80	500n	5.0m	40		150A	SiΔ	A1
15	1N663	80	500n	5.0m	40		150A	SiΔ	A1
16	1N633	90	300n	5.0m	40				DO7
17	1N3653	100	4.0n	5.0m	6.5	1.0m	200S	Si	DO7
18	1N3654	100	4.0n	5.0m	6.5	1.0m	200S	Si	DO7
19	AAY28	100	100n	5.0m		.50m	90J	Ge	DO7
20	1N662A	100	300n	5.0m	40		150A	Si	A1bz
21	1N663A	100	300n	5.0m	40		150A	Si	A1bz
22	1N778	100	300n	5.0m	40		200A	Si	A1bz
23	1N806	100	300n	5.0m	40		150A	Si	DO7
24	1N899	100	300n	5.0m	40		150A	Si	A2e
25	1N900	100	300n	5.0m	40		150A	Si	A2e
26	1N901	100	300n	5.0m	40		150A	Si	A2e
27	HMG663A	100	300n	5.0m	40			Si	F133a
28	HMG899	100	300n	5.0m	40			Si	F133a
29	HMG900	100	300n	5.0m	40			Si	F133a
30	HMG901	100	300n	5.0m	40			Si	F133a
31	MC663A	100	300n	5.0m	40		175A		A2c
32	PM031	100	300n	5.0m	40		150A		M163
33	PM034	100	300n	5.0m	40		150A		M163
34	1N933	100 *	400n	5.0m	40		75A	Ge	DO7
35	HMG662	100	500n	5.0m	40			Si	F133a
36	HMG662A	100	500n	5.0m	40			Si	F133a
37	HMG663	100	500n	5.0m	40			Si	F133a
38	MC662	100	500n	5.0m	40		175A		A2c
39	MC662A	100	500n	5.0m	40		175A		A2c
40	MC663	100	500n	5.0m	40		175A		A2c
41	1N699	105	300n	5.0m	50	.80m	85A	Ge†	DO7
42	MT201	110	200n	5.0m	40				A60e
43	MT208	110	200n	5.0m	40				A60e
44	MC806	110	300n	5.0m	40		175A		A2c
45	MC808	110	300n	5.0m	40		175A		A2c
46	1N928	120	150n	5.0m	10		150A	Si	A60p
47	PS7270	120	150n	5.0m	10			SiΔ	DO14
48	1N798	120 *	250n	5.0m	40		200A	SiΔ	A60p
49	MC798	120	250n	5.0m	40		175A		A2c
50	1N658	120	300n	5.0m	40		175A	Si	DO7
51	1N658A	120	300n	5.0m	40		175A	Si	DO7
52	1N5608	120	300n	5.0m	40		200C	Si	DO35
53	MC658	120	300n	5.0m	40		175A		A2c
54	MC658A	120	300n	5.0m	40		175A		A2c
55	MC892	120	300n	5.0m	40		175A		A2c
56	1N797	120 *	500n	5.0m	40		200A	SiΔ	A60p
57	1N799	120 *	500n	5.0m	40		200A	SiΔ	A60p
58	1N800	120 *	500n	5.0m	40		200A	SiΔ	A60p
59	MC797	120	500n	5.0m	40		175A		A2c
60	MC799	120	500n	5.0m	40		175A		A2c
61	MC800	120	500n	5.0m	40		175A		A2c
62	1N251A	125	150n	5.0m	10	.50m	150A	Si	DO7
63	1N252A	125	150n	5.0m	10	.30m	150A	Si	DO7
64	MC778	125	300n	5.0m	40		175A		A2c
65	DR521	140	300n	5.0m	40			Si	DO7
66	1N919	150	300n	5.0m	40	500u	150S	Si	A1cz
67	1N801	150 *	500n	5.0m	40		200A	SiΔ	A60p
68	1N802	150 *	500n	5.0m	40		200A	SiΔ	A60p
69	1N3625	150	500n	5.0m	40	500u	150	Si	DO7
70	MC801	150	500n	5.0m	40		175A		A2c
71	MC802	150	500n	5.0m	40		175A		A2c
72	1N779	175	300n	5.0m	40		150A	Si	A1bz
73	1N807	180	300n	5.0m	40		150A	Si	DO7
74	1N643	200	300n	5.0m	40		150A	SiΔ	DO7
75	1N643A	200	300n	5.0m	40		150A	Si	A1bz
76	1N902	200	300n	5.0m	40		150A	Si	A2e
77	MC643	200	300n	5.0m	40		175A		A2c
78	MC643A	200	300n	5.0m	40		175A		A2c
79	MC779	200	300n	5.0m	40		175A		A2c
80	MC807	200	300n	5.0m	40		175A		A2c
81	PM041	200	300n	5.0m	40		150A		M163
82	PM042	200	300n	5.0m	40		150A		M163
83	1N803	200 *	500n	5.0m	40		200A	SiΔ	A60p
84	1N804	200 *	500n	5.0m	40		200A	SiΔ	A60p
85	MC803	200	500n	5.0m	40		175A		A2c
86	MC804	200	500n	5.0m	40		175A		A2c
87	MT202	215	200n	5.0m	40				A60e
88	MT209	215	200n	5.0m	40				A60e
89	DR833	240 *	300n	5.0m	40			Si	DO7
90	MC893	240	300n	5.0m	40		175A		A2c
91	MT203	320	200n	5.0m	40				A60e
92	MT210	320	200n	5.0m	40				A60e
93	MC005	400	4.0u	5.0m	40		175A	Si	A2a
94	MT204	425	300n	5.0m	40				A60e
95	MT211	425	300n	5.0m	40				A60e
96	MT205	525	400n	5.0m	40				A60e
97	MT212	525	400n	5.0m	40				A60e
98	1N3729	600	500n	5.0m	40		200S	Si	DO7
99	MT206	625	400n	5.0m	40				A60e
100	MT213	625	400n	5.0m	40				A60e
101	FM50	5.0k	150n	5.0m		10m	150J	Si	A409e
102	T-FM50(A)	5k	150n	5.0m		10m	150J		A450
103	FM75	7.5k	150n	5.0m		10m	150J	Si	A409e
104	T-FM75(A)	7.5k	150n	5.0m		10m	150J		A450
105	T-FM100(A)	10k	150n	5.0m		10m	150J		A450
106	T-FM150(A)	15k	150n	5.0m		10m	150J		A450
107	T-FM200(A)	20k	150n	5.0m		10m	150J		A450
108	T-FM250(A)	25k	150n	5.0m		10m	150J		A450
109	1N905		4.0n	10m	5.0				
110	1N907		4.0n	10m	5.0				

LINE No.	5 TYPE NO.	2 PIV (V)	RECOVERY TIME 3 trr (s)	TEST CONDITIONS 1 IF (A)	4 VR (V)	IR (A)	MAX. TEMP (°C)	MAT.	DRAWING NO.
111	1N908		4.0n	10m	5.0				
112	ID1-050	1.0	.10n	10m	6.0		75A	Ge*	DO7
113	ID1-050A	1.0	.10n	10m	6.0		75A	Ge*	DO7
114	ID1-050B	1.0	.10n	10m	6.0		75A	Ge*	DO7
115	ID1-050C	1.0	.10n	10m	6.0		75A	Ge*	DO7
116	ID1-050D	1.0	.10n	10m	6.0		75A	Ge*	DO7
117	ID1-050E	1.0	.10n	10m	6.0		75A	Ge*	DO7
118	ID1-050T	1.0	.10n	10m	6.0		75A	Ge*	DO7
119	Q1-100	1.0	1.0n	10m		1.0m	75A		DO7
120	Q1-100A	1.0	1.0n	10m		1.0m	75A		DO7
121	Q1-100B	1.0	1.0n	10m		1.0m	75A		DO7
122	Q1-100C	1.0	1.0n	10m		1.0m	75A		DO7
123	Q1-100D	1.0	1.0n	10m		1.0m	75A		DO7
124	Q1-100E	1.0	1.0n	10m		1.0m	75A		DO7
125	Q1-100T	1.0	1.0n	10m		1.0m	75A		DO7
126	Q1-200	1.0	1.0n	10m		1.0m	75A		DO7
127	Q1-200A	1.0	1.0n	10m		1.0m	75A		DO7
128	Q1-200B	1.0	1.0n	10m		1.0m	75A		DO7
129	ID2-050	2.0	.10n	10m	6.0		75A	Ge*	DO7
130	ID2-050A	2.0	.10n	10m	6.0		75A	Ge*	DO7
131	ID2-050B	2.0	.10n	10m	6.0		75A	Ge*	DO7
132	ID2-050C	2.0	.10n	10m	6.0		75A	Ge*	DO7
133	ID2-050D	2.0	.10n	10m	6.0		75A	Ge*	DO7
134	ID2-050E	2.0	.10n	10m	6.0		75A	Ge*	DO7
135	ID2-050T	2.0	.10n	10m	6.0		75A	Ge*	DO7
136	Q2-100	2.0	1.0n	10m		1.0m	75A		DO7
137	Q2-100A	2.0	1.0n	10m		1.0m	75A		DO7
138	Q2-100B	2.0	1.0n	10m		1.0m	75A		DO7
139	Q2-100C	2.0	1.0n	10m		1.0m	75A		DO7
140	Q2-100D	2.0	1.0n	10m		1.0m	75A		DO7
141	Q2-100E	2.0	1.0n	10m		1.0m	75A		DO7
142	Q2-100T	2.0	1.0n	10m		1.0m	75A		DO7
143	Q2-200	2.0	1.0n	10m		1.0m	75A		DO7
144	Q2-200A	2.0	1.0n	10m		1.0m	75A		DO7
145	Q2-200B	2.0	1.0n	10m		1.0m	75A		DO7
146	ID3-050	3.0	.10n	10m	6.0		75A	Ge*	DO7
147	ID3-050A	3.0	.10n	10m	6.0		75A	Ge*	DO7
148	ID3-050B	3.0	.10n	10m	6.0		75A	Ge*	DO7
149	ID3-050C	3.0	.10n	10m	6.0		75A	Ge*	DO7
150	ID3-050D	3.0	.10n	10m	6.0		75A	Ge*	DO7
151	ID3-050E	3.0	.10n	10m	6.0		75A	Ge*	DO7
152	ID3-050T	3.0	.10n	10m	6.0		75A	Ge*	DO7
153	MA41516	3.0	.50n	10m	3.0			Si	A1ad
154	Q3-200	3.0	1.0n	10m		1.0m	75A		DO7
155	Q3-200A	3.0	1.0n	10m		1.0m	75A		DO7
156	Q3-200B	3.0	1.0n	10m		1.0m	75A		DO7
157	Q3-200C	3.0	1.0n	10m		1.0m	75A		DO7
158	Q3-200D	3.0	1.0n	10m		1.0m	75A		DO7
159	Q3-200E	3.0	1.0n	10m		1.0m	75A		DO7
160	Q3-200T	3.0	1.0n	10m		1.0m	75A		DO7
161	Q3-300	3.0	1.0n	10m		1.0m	75A		DO7
162	Q3-300A	3.0	1.0n	10m		1.0m	75A		DO7
163	Q3-300B	3.0	1.0n	10m		1.0m	75A		DO7
164	1SS174	3.0	1.0u	10m		10m	100J	Si	A1abg
165	Q3-90T	4.0	.10n	10m	6.0		75A	GeØ	DO7
166	Q3-100T	4.0	.10n	10m	6.0		75A	GeØ	DO7
167	Q3-500	4.0	2.0n	10m	6.0		75A	GeØ	DO7
168	ID5-050	5.0	.20n	10m	6.0		75A	Ge*	DO7
169	ID5-050A	5.0	.20n	10m	6.0		75A	Ge*	DO7
170	ID5-050B	5.0	.20n	10m	6.0		75A	Ge*	DO7
171	ID5-050C	5.0	.20n	10m	6.0		75A	Ge*	DO7
172	ID5-050D	5.0	.20n	10m	6.0		75A	Ge*	DO7
173	ID5-050E	5.0	.20n	10m	6.0		75A	Ge*	DO7
174	ID5-050T	5.0	.20n	10m	6.0		75A	Ge*	DO7
175	Q5-100	5.0	.50n	10m	6.0		75A	Ge*	DO7
176	Q5-100A	5.0	.50n	10m	6.0		75A	Ge*	DO7
177	Q5-100B	5.0	.50n	10m	6.0		75A	Ge*	DO7
178	Q5-100C	5.0	.50n	10m	6.0		75A	Ge*	DO7
179	Q5-100D	5.0	.50n	10m	6.0		75A	Ge*	DO7
180	Q5-100E	5.0	.50n	10m	6.0		75A	Ge*	DO7
181	Q5-100T	5.0	.50n	10m	6.0		75A	Ge*	DO7
182	Q5-200	5.0	2.0n	10m		1.0m	75A		DO7
183	Q5-200A	5.0	2.0n	10m		1.0m	75A		DO7
184	Q5-200B	5.0	2.0n	10m		1.0m	75A		DO7
185	Q5-200C	5.0	2.0n	10m		1.0m	75A		DO7
186	Q5-200D	5.0	2.0n	10m		1.0m	75A		DO7
187	Q5-200E	5.0	2.0n	10m		1.0m	75A		DO7
188	Q5-200T	5.0	2.0n	10m		1.0m	75A		DO7
189	Q5-300	5.0	2.0n	10m		1.0m	75A		DO7
190	Q5-300A	5.0	2.0n	10m		1.0m	75A		DO7
191	Q5-300B	5.0	2.0n	10m		1.0m	75A		DO7
192	ID6-050	6.0	.30n	10m	6.0		75A	Ge*	DO7
193	ID6-050A	6.0	.30n	10m	6.0		75A	Ge*	DO7
194	ID6-050B	6.0	.30n	10m	6.0		75A	Ge*	DO7
195	ID6-050C	6.0	.30n	10m	6.0		75A	Ge*	DO7
196	ID6-050D	6.0	.30n	10m	6.0		75A	Ge*	DO7
197	ID6-050E	6.0	.30n	10m	6.0		75A	Ge*	DO7
198	ID6-050T	6.0	.30n	10m	6.0		75A	Ge*	DO7
199	Q7-050	6.0	.40n	10m	6.0		75A	Ge*	DO7
200	Q6-100	6.0	.50n	10m	6.0		75A	Ge*	DO7
201	Q6-100A	6.0	.50n	10m	6.0		75A	Ge*	DO7
202	Q6-100B	6.0	.50n	10m	6.0		75A	Ge*	DO7
203	Q6-100C	6.0	.50n	10m	6.0		75A	Ge*	DO7
204	Q6-100D	6.0	.50n	10m	6.0		75A	Ge*	DO7
205	Q6-100E	6.0	.50n	10m	6.0		75A	Ge*	DO7
206	Q6-100F	6.0	.50n	10m	6.0		75A	Ge*	DO7
207	Q6-100G	6.0	.50n	10m	6.0		75A	Ge*	DO7
208	Q6-100H	6.0	.50n	10m	6.0		75A	Ge*	DO7
209	Q6-100T	6.0	.50n	10m	6.0		75A	Ge*	DO7
210	Q6-100I	6.0	1.0n	10m	6.0		75A	Ge*	DO7
211	Q6-100J	6.0	1.0n	10m	6.0		75A	Ge	DO7
212	Q6-100K	6.0	1.0n	10m	6.0		75A	Ge*	DO7
213	Q6-100L	6.0	1.0n	10m	6.0		75A	Ge*	DO7
214	Q7-100	6.0	1.0n	10m	6.0		75A	Ge*	DO7
215	Q5-500	6.0	2.0n	10m	6.0		75A	GeØ	DO7
216	Q6-200	6.0	2.0n	10m		1.0m	75A		DO7
217	Q6-200A	6.0	2.0n	10m		1.0m	75A		DO7
218	Q6-200B	6.0	2.0n	10m		1.0m	75A		DO7
219	Q6-200C	6.0	2.0n	10m		1.0m	75A		DO7
220	Q6-200D	6.0	2.0n	10m		1.0m	75A		DO7

SYMBOLS AND CODES EXPLAINED IN INTERPRETER

4. HIGH-SPEED DIODES - Fast Recovery/Switching (Cont'd)

IN ORDER OF: (1) IF TEST (2) PIV (3) trr & (4) & VF & (5) TYPE NUMBER

LINE No.	5 TYPE NO.	2 PIV (V)	3 RECOVERY TIME trr (s)	TEST CONDITIONS 1 IF (A)	4 VR (V)	IR (A)	MAX. TEMP (°C)	MAT.	DRAWING NO.
1	Q6-200E	6.0	2.0n	10m		1.0m	75A		DO7
2	Q6-200F	6.0	2.0n	10m		1.0m	75A		DO7
3	Q6-200G	6.0	2.0n	10m		1.0m	75A		DO7
4	Q6-200H	6.0	2.0n	10m		1.0m	75A		DO7
5	Q6-200I	6.0	2.0n	10m		1.0m	75A		DO7
6	Q6-200J	6.0	2.0n	10m		1.0m	75A		DO7
7	Q6-200K	6.0	2.0n	10m		1.0m	75A		DO7
8	Q6-200L	6.0	2.0n	10m		1.0m	75A		DO7
9	Q6-200T	6.0	2.0n	10m		1.0m	75A		DO7
10	Q6-300	6.0	2.0n	10m		1.0m	75A		DO7
11	Q6-300A	6.0	2.0n	10m		1.0m	75A		DO7
12	Q6-300B	6.0	2.0n	10m		1.0m	75A		DO7
13	Q6-400	6.0	2.0n	10m		1.0m	75A		DO7
14	Q6-400A	6.0	2.0n	10m		1.0m	75A		DO7
15	Q6-400B	6.0	2.0n	10m		1.0m	75A		DO7
16	Q7-250	6.0	2.0n	10m	6.0		75A	Ge*	DO7
17	1N994	6.5	2.0n	10m	6.0	3.0m	100A	Ge	DO7
18	ID6-020	7.0	1.0n	10m	6.0		75A	Ge*	DO7
19	ID8-050	8.0	.50n	10m	6.0		75A	Ge*	DO7
20	ID8-050A	8.0	.50n	10m	6.0		75A	Ge*	DO7
21	ID8-050B	8.0	.50n	10m	6.0		75A	Ge*	DO7
22	ID8-050C	8.0	.50n	10m	6.0		75A	Ge*	DO7
23	ID8-050D	8.0	.50n	10m	6.0		75A	Ge*	DO7
24	ID8-050T	8.0	.50n	10m	6.0		75A	Ge*	DO7
25	Q8-200	8.0	3.0n	10m		1.0m	75A		DO7
26	Q8-200A	8.0	3.0n	10m		1.0m	75A		DO7
27	Q8-200B	8.0	3.0n	10m		1.0m	75A		DO7
28	Q8-200C	8.0	3.0n	10m		1.0m	75A		DO7
29	Q8-200D	8.0	3.0n	10m		1.0m	75A		DO7
30	Q8-200T	8.0	3.0n	10m		1.0m	75A		DO7
31	Q8-300	8.0	3.0n	10m		1.0m	75A		DO7
32	Q8-300A	8.0	3.0n	10m		1.0m	75A		DO7
33	Q8-300B	8.0	3.0n	10m		1.0m	75A		DO7
34	GD508A	8.0	20nC	10m	5.0			Ge*	A352
35	HD5000	10 $	500p	10m	6.0		100J	Si♦	DO35
36	HD5001	10 $	500p	10m	6.0		100J	Si♦	DO35
37	HD5002	10 $	500p	10m	6.0		100J	Si	DO7
38	HD5003	10 $	.50n	10m	6.0		100J	Si	DO7
39	HD5004	10 $	500p	10m	6.0		100J	Si♦	DO35
40	ID10-050	10	.50n	10m	6.0		75A	Ge*	DO7
41	ID10-050A	10	.50n	10m	6.0		75A	Ge*	DO7
42	ID10-050B	10	.50n	10m	6.0		75A	Ge*	DO7
43	ID10-050C	10	.50n	10m	6.0		75A	Ge*	DO7
44	ID10-050D	10	.50n	10m	6.0		75A	Ge*	DO7
45	ID10-050T	10	.50n	10m	6.0		75A	Ge*	DO7
46	1N4244	10 $	750p	10m		10m	150A	Si	DO7
47	1N4376	10 $	750p	10m		10m	150A	Si	DO7
48	Q10-100	10	1.0n	10m	6.0		75A	Ge	DO7
49	Q10-100T	10	1.0n	10m	6.0		75A	Ge	DO7
50▼	1A1/18	10	3.0n	10m	10	10m	175A	Si	TO18
51▼	1A2/18	10	3.0n	10m	10	10m	175A	Si	TO18
52▼	1A5/18	10	3.0n	10m	10	10m	175A	Si	TO18
53▼	1B1/18	10	3.0n	10m	10	10m	175A	Si	TO18
54▼	1B2/18	10	3.0n	10m	10	10m	175A	Si	TO18
55▼	1B5/18	10	3.0n	10m	10	10m	175A	Si	TO18
56	1N4524	10	3.0n	10m		1.0m	90S	Ge	DO7
57	Q10-200	10	3.0n	10m		1.0m	75A		DO7
58	Q10-200A	10	3.0n	10m		1.0m	75A		DO7
59	Q10-200B	10	3.0n	10m		1.0m	75A		DO7
60	Q10-200C	10	3.0n	10m		1.0m	75A		DO7
61	Q10-200D	10	3.0n	10m		1.0m	75A		DO7
62	Q10-200T	10	3.0n	10m		1.0m	75A		DO7
63	Q10-300	10	3.0n	10m		1.0m	75A		DO7
64	Q10-300A	10	3.0n	10m		1.0m	75A		DO7
65	Q10-300B	10	3.0n	10m		1.0m	75A		DO7
66	Q10-500	10	3.0n	10m	6.0		75A	Ge*	DO7
67	HD1871	10	3.5n	10m	6.0			GeØ	DO7
68	BA216	10	4.0n	10m	6.0	10m	200J	Si	A134e
69	BA220	10	4.0n	10m	6.0	10m	200J	Si#$	DO35
70	BA316	10 $	4.0n	10m	6.0	10m	200J	Si#$	DO35
71	ID12-050	12	.60n	10m	6.0		75A	Ge*	DO7
72	ID12-050A	12	.60n	10m	6.0		75A	Ge*	DO7
73	ID12-050B	12	.60n	10m	6.0		75A	Ge*	DO7
74	ID12-050C	12	.60n	10m	6.0		75A	Ge*	DO7
75	ID12-050D	12	.60n	10m	6.0		75A	Ge*	DO7
76	ID12-050T	12	.60n	10m	6.0		75A	Ge*	DO7
77	Q12-200	12	3.0n	10m		1.0m	75A		DO7
78	Q12-200A	12	3.0n	10m		1.0m	75A		DO7
79	Q12-200B	12	3.0n	10m		1.0m	75A		DO7
80	Q12-200C	12	3.0n	10m		1.0m	75A		DO7
81	Q12-200D	12	3.0n	10m		1.0m	75A		DO7
82	Q12-200T	12	3.0n	10m		1.0m	75A		DO7
83	Q12-300	12	3.0n	10m		1.0m	75A		DO7
84	Q12-300A	12	3.0n	10m		1.0m	75A		DO7
85	Q12-300B	12	3.0n	10m		1.0m	75A		DO7
86	AAY48	12	6.0n	10m	6.0		85S	GeØ	DO7
87	SFD118A	12	6.0n	10m	6.0		85S	GeØ	DO7
88	1N4008	12	70n	10m	225	1.0m	90A	Ge	DO7
89	PR0101	15	100p	10m	10		175A	Si$Δ	F27d
90	PR0102	15	150p	10m	10		175A	Si$Δ	F27d
91	PR0103	15	200p	10m	10		175A	Si$Δ	F27d
92	1N4392	15	500p	10m	6.0		150S	Si	DO7
93	ID15-050	15	.60n	10m	6.0		75A	Ge*	DO7
94	ID15-050A	15	.60n	10m	6.0		75A	Ge*	DO7
95	ID15-050B	15	.60n	10m	6.0		75A	Ge*	DO7
96	ID15-050C	15	.60n	10m	6.0		75A	Ge*	DO7
97	ID15-050D	15	.60n	10m	6.0		75A	Ge*	DO7
98	ID15-050T	15	.60n	10m	6.0		75A	Ge*	DO7
99	BAY82	15 *	750p	10m		10m	175J	Si#	DO7
100	FD777	15 *	750p	10m		10m	175J	Si#	DO7
101	1N3467	15	2.0n	10m	6.0		90S	Ge	DO7
102	1N3468	15	2.0n	10m	6.0		90S	Ge	DO7
103	Q15-200	15	3.0n	10m		1.0m	75A		DO7
104	Q15-200A	15	3.0n	10m		1.0m	75A		DO7
105	Q15-200B	15	3.0n	10m		1.0m	75A		DO7
106	Q15-200C	15	3.0n	10m		1.0m	75A		DO7
107	Q15-200D	15	3.0n	10m		1.0m	75A		DO7
108	Q15-200T	15	3.0n	10m		1.0m	75A		DO7
109	Q15-300	15	3.0n	10m		1.0m	75A		DO7
110	Q15-300A	15	3.0n	10m		1.0m	75A		DO7
111	Q15-300B	15	3.0n	10m		1.0m	75A		DO7
112	HD1870	15	3.5n	10m	6.0			GeØ	DO7
113	BA168	15	4.0n	10m	6.0	1m	200J	Si#	DO35
114	BAW63B	15	4.0n	10m	5.0		175A		M713
115	HMG993	15	4.0n	10m	6.0	3m		Si	F133a
116	1N995	15	6.0n	10m	6.0	3.0m	100A	Ge	DO7
117	1N4523	15	8.0n	10m		1m	90S	Ge	DO7
118	1N5721	15	10n	10m		10m	200S	Si	DO35
119	SFD121	15	75nC	10m			85S	GeØ	DO7
120	KD520A	15	100nC	10m	10		100A	Si#$	A344m
121	19P1	15	250n	10m		1.0m	85S	Ge	DO7
122	ID18-050	18	.80n	10m	6.0		75A	Ge*	DO7
123	ID18-050A	18	.80n	10m	6.0		75A	Ge*	DO7
124	ID18-050B	18	.80n	10m	6.0		75A	Ge*	DO7
125	ID18-050C	18	.80n	10m	6.0		75A	Ge*	DO7
126	ID18-050D	18	.80n	10m	6.0		75A	Ge*	DO7
127	ID18-050T	18	.80n	10m	6.0		75A	Ge*	DO7
128	Q18-200	18	4.0n	10m		1.0m	75A		DO7
129	Q18-200A	18	4.0n	10m		1.0m	75A		DO7
130	Q18-200B	18	4.0n	10m		1.0m	75A		DO7
131	Q18-200C	18	4.0n	10m		1.0m	75A		DO7
132	Q18-200D	18	4.0n	10m		1.0m	75A		DO7
133	Q18-200T	18	4.0n	10m		1.0m	75A		DO7
134	Q18-300	18	4.0n	10m		1.0m	75A		DO7
135	Q18-300A	18	4.0n	10m		1.0m	75A		DO7
136	Q18-300B	18	4.0n	10m		1.0m	75A		DO7
137	1N4726	20 $	40pC	10m			200S	Si	DO7
138	1N4727	20 $	40pC	10m			200S	Si	DO35
139	1S1857	20	80p	10m	10		150J	Si$§	F27a
140	1N4390	20	500p	10m	6.0		150S	Si	DO7
141	1N4391	20	500p	10m	6.0		150S	Si	DO7
142	FDC4376	20	800p	10m		10m		Si	DO7
143	ID20-050	20	1.0n	10m	6.0		75A	Ge*	DO7
144	ID20-050A	20	1.0n	10m	6.0		75A	Ge*	DO7
145	ID20-050T	20	1.0n	10m	6.0		75A	Ge*	DO7
146	1N3146	20	2.0n	10m	6.0		75S	Ge	DO7
147	1N903	20	4.0n	10m	5.0		150S	Si	A1ce
148	1N905A	20	4.0n	10m	5.0	1.0m	175A	Si	A1vf
149	1N906	20	4.0n	10m	5.0		150S	Si	A1ce
150	1N906A	20	4.0n	10m	5.0	1.0m	175A	Si	A1vf
151	1N993	20	4.0n	10m	6.0	3.0m	150A	Si	DO7
152	1N3596	20	4.0n	10m		10m	175A	Si	DO7
153	HMG905	20	4.0n	10m	5.0	1.0m		Si	F133a
154	HMG905A	20	4.0n	10m	5.0	1.0m		Si	F133a
155	HMG906	20	4.0n	10m	5.0	1.0m		Si	F133a
156	HMG906A	20	4.0n	10m	5.0	1.0m		Si	F133a
157	Q20-200	20	5.0n	10m		1.0m	75A		DO7
158	Q20-200A	20	5.0n	10m		1.0m	75A		DO7
159	Q20-200T	20	5.0n	10m		1.0m	75A		DO7
160	Q20-300	20	5.0n	10m		1.0m	75A		DO7
161	Q20-300A	20	5.0n	10m		1.0m	75A		DO7
162	Q20-300B	20	5.0n	10m		1.0m	75A		DO7
163	HD1841	20	6.0n	10m	6.0			GeØ	DO7
164♦	BAY93	20	15n	10m		10m	175J	Si	A60h
165	CD63	20	20n	10m	20	5.0u			TO106
166	AAZ18	20	70n	10m		10m	75J	Ge	DO7
167	BAV45	20	350n	10m	1.0	10m	125J	Si	C29s
168	1S2071	22	5.0n	10m	6.0		175J	Si#$	DO35
169	PR0104	24	150p	10m	10		175A	Si$Δ	F27d
170	PR0105	24	150p	10m	10		175A	Si$Δ	F27d
171	PR0106	24	200p	10m	10		175A	Si$Δ	F27d
172	1S1856	25	120p	10m	10		150J	Si$§	F27a
173	1S1855	25	300p	10m	10		150J	Si$§	A1bw
174	1N4536	25 $	2.0n	10m	6.0	1.0m	200S	Si	A1e
175	1N4548	25	2.0n	10m	6.0		200S	Si	DO18
176	BAY60	25	2.0n	10m	6.0		125A	Si#	A171f
177▼	2A1/18	25	3.0n	10m	25	10m	175A	Si	TO18
178▼	2A2/18	25	3.0n	10m	25	10m	175A	Si	TO18
179▼	2A5/18	25	3.0n	10m	25	10m	175A	Si	TO18
180▼	2B1/18	25	3.0n	10m	25	10m	175A	Si	TO18
181▼	2B2/18	25	3.0n	10m	25	10m	175A	Si	TO18
182▼	2B5/18	25	3.0n	10m	25	10m	175A	Si	TO18
183	1N4009	25	4.0n	10m		10m	200S	Si	DO7
184	1N4043	25	4.0n	10m		10m	175J	Si	M50
185	CT40	25	4.0n	10m	6.0		150	Si	DO35
186	CT45	25	4.0n	10m	6.0		150	Si	DO35
187	CT55	25	4.0n	10m	6.0		150	Si	DO35
188	CT70	25	4.0n	10m	6.0		150	Si	DO35
189	CT75	25	4.0n	10m	6.0		150	Si	DO35
190	DS448	25	4.0n	10m	6.0		150	Si	A1p
191♦	2C1/18	25	9.0n	10m	25	10m	175A	Si	TO18
192♦	2C2/18	25	9.0n	10m	25	10m	175A	Si	TO18
193♦	2C05/18	25	9.0n	10m	25	10m	175A	Si	TO18
194	OA47	25	70n	10m	1.0	10m	75J	GeØ	DO7
195	BA167	25	200n	10m		10m	150A	Si	DO35
196	PR0107	30	150p	10m	10		175A	Si$Δ	F27d
197	PR0108	30	200p	10m	10		175A	Si$Δ	F27d
198	PR0109	30	200p	10m	10		175A	Si$Δ	F27d
199	PR0110	30	250p	10m	10		175A	Si$Δ	F27d
200	FD700	30 *	700p	10m		10m	175J	Si#	DO7
201	TID778	30	750p	10m		1.0m	175S	Si	DO35
202	1N3956	30	2.0n	10m	6.0			Si	DO7
203	1N5219	30 $	2.0n	10m		10m	175S	Si	DO7
204	1SS108	30	2.0n	10m		10m	100J	Si	DO35
205	HMG3067	30	2.0n	10m	6.0	1.0m		Si	F133a
206	HMG9010	30	2.0n	10m	6.0	1.0m	200A	Si$	F133a
207	1N917	30	3.0n	10m		10m	200S	Si	A398
208♦	ISS119	30 $	3.5n	10m		10	175J	Si$#	
209	1N904	30	4.0n	10m	5.0		150S	Si	A1ce
210	1N904A	30	4.0n	10m	5.0	1.0m	175A	Si	A1vf
211	1N907A	30	4.0n	10m	5.0	1.0m	175A	Si	A1vf
212	1N3067	30	4.0n	10m	1.0	10m	200S	Si	A398
213	BA217	30	4.0n	10m	6.0	10m	200J	Si	A134e
214	BA221	30	4.0n	10m	6.0	10m	200J	Si#$	DO35
215	BA317	30 $	4.0n	10m	6.0	10m	200J	Si#$	DO35
216	BAW63A	30	4.0n	10m	5.0		175A		M713
217	FD2B	30	4.0n	10m	6.0	10m		Si	u50a
218	HMG904	30	4.0n	10m	5.0	1.0m		Si	F133a
219	HMG904A	30	4.0n	10m	5.0	1.0m		Si	F133a
220	HMG907	30	4.0n	10m	5.0	1.0m		Si	F133a

SYMBOLS AND CODES EXPLAINED IN INTERPRETER

4. HIGH-SPEED DIODES - Fast Recovery/Switching (Cont'd)

IN ORDER OF: (1) IF TEST (2) PIV
(3) trr & (4) & VF & (5) TYPE NUMBER

LINE No.	5 TYPE NO.	2 PIV (V)	RECOVERY TIME 3 trr (s)	TEST CONDITIONS 1 IF (A)	4 VR (V)	IR (A)	MAX. TEMP (°C)	MAT.	DRAWING NO.
1	HMG907A	30	4.0n	10m	5.0	1.0m		Si	F133a
2	HMG3596	30	4.0n	10m	10	1.0m		Si	F133a
3	KD521G	30	4.0n	10m	10	2.0m	125A	Si#$	A159a
4	KD522A	30	4.0n	10m	10	2.0m	125A	Si#$	A159a
5	MC905	30	4.0n	10m	5.0	1.0m	175A		A2c
6	MC905A	30	4.0n	10m	5.0	1.0m	175A		A2c
7	MC906	30	4.0n	10m	5.0	1.0m	175A		A2c
8	MC906A	30	4.0n	10m	5.0	1.0m	175A		A2c
9	1N3603	30	5.0n	10m		10m	175A	Si	DO7
10	BAR42	30	5.0n	10m		1.0m	125J	Si♦	TO236
11	BAR43	30	5.0n	10m		1.0m	125J	Si♦	TO236
12	BAT85	30	5.0n	10m	30	1.0m	125J	Si♦	DO34
13	HD1840	30	6.0n	10m	6.0			GeØ	DO7
14	FD2RB	30	7.0n	10m	6.0	10m		Si	u50
15	1N4147	30	10n	10m		1.0m	150S	Si	DO7
16	1N5720	30	10n	10m		10m	200S	Si	DO35
17	HD4101	30	10n	10m		1.0m	90A	Ge	DO7
18	HMG4147	30	10n	10m	10	1.0m		Si	F133a
19	KD503A	30	10n	10m	10	2.0m	85A	Si#	A352
20	KD503B	30	10n	10m	10	2.0m	85A	Si#	A352
21	SFD105	30	80nC	10m			85S	GeØ	DO7
22	SFD122	30	160n	10m	0.0	.50m	85S	GeØ	DO7
23	HP5082-1001	35	1.5n	10m		10m	175A	Si$#	DO7
24	1S952#C	35	2.0n	10m	6.0		200A	Si$#	A1d
25	1SS94	35	2.0n	10m	6.0		175J	Si$#	DO35
26	1SS138	35	2.0n	10m	6.0		175J	Si$#	DO34
27	HMG4009	35	2.0n	10m	6.0	1.0m		Si	F133a
28	HMG4043	35	2.0n	10m	6.0	1.0m		Si	F133a
29	HMG4154	35	2.0n	10m	6.0	1.0m		Si	F133a
30	HP5082-1002	35	2.0n	10m		10m	175A	Si$#	DO7
31	LL4154	35	2.0n	10m	6.0	1.0m	200J	Si	F135
32	Q30-500	35	2.0n	10m	6.0		75A	Ge*	DO7
33	Q30-500A	35	2.0n	10m	6.0		75A	Ge*	DO7
34	1S953	35	3.0n	10m	6.0		200J	Si#$	DO35
35	1S2787	35	3.0n	10m	6.0		125J	Si$#	DO35
36	1SS117	35	3.0n	10m		10m	200J	Si	DO35
37	1S2076	35	3.5n	10m		10m	175J	Si§#	DO35
38♦	1N4154	35	4.0n	10m	6.0	10m	200J	Si	DO35
39	1S1588	35	4.0n	10m	6.0	100u	175J	Si$#	DO35
40	1SS133	35	4.0n	10m	6.0		175J	Si$#	DO34
41	BAW75	35	4.0n	10m		10m	200J	Si$#	DO35
42	FD4B	35	4.0n	10m	6.0			Si	u49
43	ITT600	35	4.0n	10m	6.0	1.0m	200J	#$	A1sy
44	FDH999	35 *	5.0n	10m		10m	175J	SiΔ#	DO35
45	Q30-200	35	5.0n	10m		1.0m	75A		DO7
46	Q30-200A	35	5.0n	10m		1.0m	75A		DO7
47	Q30-300	35	5.0n	10m		1.0m	75A		DO7
48	Q30-300A	35	5.0n	10m		1.0m	75A		DO7
49	Q30-300B	35	5.0n	10m		1.0m	75A		DO7
50	FD4RB	35	6.0n	10m	6.0			Si	u49
51	1S2075K	35	8.0n	10m		10m	175J	Si§#	DO35
52	BAY68	35	10n	10m		10m	175J	Si#	A60h
53♦	MA165	35	10n	10m	1.0	1.0m	200S	Si	A1h
54	MA221	35	10n	10m	6.0	1.0m			F136
55	1SS141	35	50n	10m	6.0		175J	Si$#	DO35
56	1N997	35	150n	10m	10	250u	150A	SiØ	A1cs
57	1SS173	35	1.0u	10m		10m	175J	Si	A1abg
58	MA190	35	0.4m	10m	6.0	1.0m			DO35
59	BAT81	40	1.0n	10m	40	10m	200J	Si♦	DO34
60	1N3471	40	2.0n	10m		10m	250S	Si	M58
61	1N4315	40	2.0n	10m	6.0	1.0m	200S	Si	A94a
62	1N4533	40	2.0n	10m	6.0	1.0m	200S	Si	A1e
63	1N5412	40	2.0n	10m	6.0		175A	Si	DO35
64	HMG3605	40	2.0n	10m	6.0	1.0m		Si	M214b
65	HMG3608	40	2.0n	10m	6.0	1.0m		Si	F133a
66	HMG3956	40	2.0n	10m	6.0	1.0m		Si	F133a
67	HMG4152	40	2.0n	10m	6.0	1.0m		Si	F133a
68	LL4152	40	2.0n	10m	6.0	1.0m	175J	Si	F135
69	HMG917	40	3.0n	10m	10	1.0m		Si	F133a
70	1N903A	40	4.0n	10m	5.0	1.0m	175A	Si	A1vf
71	1N908A	40	4.0n	10m	5.0	1.0m	175A	Si	A1vf
72	1N3123	40	4.0n	10m	5.0	1.0m	150S	Si	DO7
73	1N3124	40	4.0n	10m	5.0	1.0m	150S	Si	DO7
74	1N3605	40	4.0n	10m		10m	200S	Si	DO7
75	1N3608	40	4.0n	10m		10m	200S	Si	M50
76	1N4152	40	4.0n	10m		10m	200S	Si	DO35
77	1N4450	40	4.0n	10m		10m	200S	Si	DO35
78	1N5319	40	4.0n	10m		10m	150A	Si	DO34
79	CT41	40	4.0n	10m	6.0		150	Si	DO35
80	CT46	40	4.0n	10m	6.0		150	Si	DO35
81	CT51	40	4.0n	10m	6.0		150	Si	DO35
82	CT56	40	4.0n	10m	6.0		150	Si	DO35
83	CT71	40	4.0n	10m	6.0		150	Si	DO35
84	CT76	40	4.0n	10m	6.0		150	Si	DO35
85	HMG903	40	4.0n	10m	5.0	1.0m		Si	F133a
86	HMG903A	40	4.0n	10m	5.0	1.0m		Si	F133a
87	HMG908	40	4.0n	10m	5.0	1.0m		Si	F133a
88	HMG3123	40	4.0n	10m	5.0	1.0m		Si	F133a
89	HMG3124	40	4.0n	10m	5.0	1.0m		Si	F133a
90	LL4450	40	4.0n	10m		1.0m	175J	Si	F135
91	MA4230	40	4.0n	10m	5.0	1.0m	150A	Si	A1
92	MC904	40	4.0n	10m	5.0	1.0m	175A		A2c
93	MC904A	40	4.0n	10m	5.0	1.0m	175A		A2c
94	MC907	40	4.0n	10m	5.0	1.0m	175A		A2c
95	MC907A	40	4.0n	10m	5.0	1.0m	175A		A2c
96	MT704	40	4.0n	10m	6.0	1.0m	175A	Si	A60e
97	MT706	40	4.0n	10m		10m	175A	Si	A60e
98	1N696	40	5.0n	10m		10m	150A	SiΔ	A182
99	1S2144	40	5.0n	10m	6.0		150J	Si	A60u
100	1SS68	40	6.0n	10m	6.0		175J	Si#$	DO35
101	1S2134	40	7.0n	10m		10m	175J	Si#$	DO35
102	1N3593	40	10n	10m		10m	200S	Si	A1c
103	1N4451	40	10n	10m		10m	200S	Si	DO35
104	HMG3593	40	10n	10m	10	1.0m		Si	F133a
105	LL4451	40	10n	10m		10m	175J	Si	F135
106♦	MA151K	40	10n	10m	1.0	1.0m	125S	Si	M988
107♦	MA151WK	40	10n	10m	1.0	1.0m	125S	Si	M988
108	MT708	40	10n	10m		10m	175A	Si	A60e
109	TI71	40	10n	10m		10m	200S	Si	A1xs
110♦	MA170	40	20n	10m	1.0	1.0m	200S	Si	A24d

LINE No.	5 TYPE NO.	2 PIV (V)	RECOVERY TIME 3 trr (s)	TEST CONDITIONS 1 IF (A)	4 VR (V)	IR (A)	MAX. TEMP (°C)	MAT.	DRAWING NO.
111	MT710	40	20n	10m		10m	175A	Si	A60e
112	TI72	40	20n	10m		10m	200S	Si	A1xs
113	TI73	40	20n	10m		10m	200S	Si	A1xs
114	TI74	40	30n	10m		10m	200S	Si	A1xs
115♦	MA151A	40	40n	10m	1.0	1.0	125S	Si	M988
116♦	MA151WA	40	40n	10m	1.0	1.0	125S	Si	M988
117	TI75	40	50n	10m		10m	200S	Si	A1xs
118	AAY49	40	400n	10m	1.0	500u	85S	GeØ	DO7
119	SFD129B	40	400n	10m		500u	85S	GeØ	DO7
120	1N781	40	500n	10m	10	100u	85A	Ge	A1cw
121	1N781A	40	500n	10m	10	100u	85A	Ge	A1cw
122	PR0111	45	350p	10m	10		175A	Si$Δ	F27d
123	PR0112	45	500p	10m	10		175A	Si$Δ	F27d
124	Q40-500	45	3.0n	10m	6.0		75A	Ge*	DO7
125	Q40-500A	45	3.0n	10m	6.0		75A	Ge*	DO7
126	FDH900	45 *	4.0n	10m		10m	175J	SiΔ#	DO35
127	Q40-200A	45	5.0n	10m		1.0m	75A		DO7
128	Q40-300	45	5.0n	10m		1.0m	75A		DO7
129	Q40-300A	45	5.0n	10m		1.0m	75A		DO7
130	Q40-300B	45	5.0n	10m		1.0m	75A		DO7
131	MA4374C	48	2.0n	10m		100m	150A	Si	DO7
132	BAT82	50	1.0n	10m	50	10m	200J	Si♦	DO34
133	HP5082-1006	50	1.5n	10m		10m	175A	Si$#	DO7
134	1N4309	50	2.0n	10m	6.0	1.0m	200S	Si	DO7
135	1N4534	50 $	2.0n	10m	6.0	1.0m	200S	Si	A1e
136	1SS93	50	2.0n	10m	6.0		175J	Si$#	DO35
137	1SS137	50	2.0n	10m	6.0		175J	Si$#	DO34
138	BAL74	50	2.0n	10m					
139	BAR74	50	2.0n	10m					
140	HMG9006	50	2.0n	10m	6.0	1.0m	200A	Si$	F133a
141	HMG9007	50	2.0n	10m	6.0	1.0m	200A	Si$	DO7
142	HMG9008	50	2.0n	10m	6.0	1.0m	200A	Si$	F133a
143	HMG9009	50	2.0n	10m	6.0	1.0m	200A	Si$	F133a
144	MA4245	50	2.0n	10m	6.0	1.0m	175A	SiΔ	A1
145	1N4087	50	2.5n	10m	6.0	1.0m	200S	Si	DO7
146▼	5A1/18	50	3.0n	10m	50	10m	175A	Si	TO18
147▼	5A2/18	50	3.0n	10m	50	10m	175A	Si	TO18
148▼	5A5/18	50	3.0n	10m	50	10m	175A	Si	TO18
149▼	5B1/18	50	3.0n	10m	50	10m	175A	Si	TO18
150▼	5B2/18	50	3.0n	10m	50	10m	175A	Si	TO18
151▼	5B5/18	50	3.0n	10m	50	10m	175A	Si	TO18
152	HSM2838	50 $	3.0n	10m	6.0		125J	Si$#	TO236*
153	B2D3600	50	3.5n	10m		10m	300S	Si$#	M784
154	B3D3600	50	3.5n	10m		10m	150A	Si$#	C162
155	1N3598	50	4.0n	10m		10m	175A	Si	DO7
156	1N3873	50	4.0n	10m		10m	200S	Si	DO7
157	1N3954	50	4.0n	10m		200m		Si	DO7
158	1S2074H	50	4.0n	10m		10m	175J	Si§#	DO35
159	1SS132	50	4.0n	10m	6.0		175J	Si$#	DO34
160♦	B2D3600F	50	4.0n	10m		10	175S	Si	TO86
161♦	B2D3600T	50	4.0n	10m		10	175S	Si	TO18
162	BA201	50	4.0n	10m	6.0	1.0m	150J	Si#$	DO35
163	BA218	50	4.0n	10m	6.0	10m	200J	Si	A134e
164	BA318	50 $	4.0n	10m	6.0	10m	200J	Si#$	DO35
165	BAS15	50	4.0n	10m		60m	200J	Si$	DO34
166♦	BAV74	50	4.0n	10m	6.0	10	175	Si	M988
167	BAX13	50	4.0n	10m	6.0	1.0m	200J	Si	A257a
168	BAY63	50	4.0n	10m		10m	200J	Si#	DO7
169♦	BD3600	50	4.0n	10m		10	175S	Si	u34
170♦	BD3600F	50	4.0n	10m		10	175S	Si	TO86
171♦	BD3600T	50	4.0n	10m		10	175S	Si	TO18
172	CT42	50	4.0n	10m	6.0		150	Si	DO35
173	CT47	50	4.0n	10m	6.0		150	Si	DO35
174	CT52	50	4.0n	10m	6.0		150	Si	DO35
175	CT57	50	4.0n	10m	6.0		150	Si	DO35
176	CT72	50	4.0n	10m	6.0		150	Si	DO35
177	CT77	50	4.0n	10m	6.0		150	Si	DO35
178	FD4A	50	4.0n	10m	6.0			Si	u49
179	HMG3873	50	4.0n	10m	10	1.0m		Si	F133a
180	KD521V	50	4.0n	10m	10	2.0m	125A	Si#$	A159a
181	LL4150	50	4.0n	10m		10m	200J	Si	F135
182	MA166	50	4.0n	10m	6.0	1.0m	200S	Si	A1h
183	MC103	50	4.0n	10m	6.0	1.0m		Si	A1ce
184	MC903	50	4.0n	10m	5.0	1.0m	175A		A2c
185	MC903A	50	4.0n	10m	5.0	1.0m	175A		A2c
186	MC908	50	4.0n	10m	5.0	1.0m	175A		A2c
187	MC908A	50	4.0n	10m	5.0	1.0m	175A		A2c
188	1N3602	50	5.0n	10m		10m	175A	Si	DO7
189	1S2070	50	5.0n	10m	6.0		175J	Si#$	DO35
190	HMG3603	50	5.0n	10m	10	1.0m		Si	F133a
191	MT700	50	5.0n	10m	6.0	1.0m	175A	Si	A60e
192	MT702	50	5.0n	10m	6.0	1.0m	175A	Si	A60e
193	MT703	50	5.0n	10m		10m	175A	Si	A60e
194	Q50-200	50	5.0n	10m		1.0m	75A		DO7
195	Q50-200A	50	5.0n	10m		1.0m	75A		DO7
196	Q50-300	50	5.0n	10m		1.0m	75A		DO7
197	Q50-300A	50	5.0n	10m		1.0m	75A		DO7
198	Q50-300B	50	5.0n	10m		1.0m	75A		DO7
199	Q50-500	50	5.0n	10m	6.0		75A	Ge*	DO7
200	Q50-500A	50	5.0n	10m	6.0		75A	Ge*	DO7
201	1N4322	50	6.0n	10m		1.0m	150A	Si	DO7
202	FD4RA	50	6.0n	10m	6.0			Si	u49
203	ITT601	50	6.0n	10m		10m	200J	Si$#	DO35
204	MT707	50	6.0n	10m		10m	175A	Si	A60e
205♦	5C1/18	50	9.0n	10m	50	10m	175A	Si	TO18
206♦	5C2/18	50	9.0n	10m	50	10m	175A	Si	TO18
207▼	5C05/18	50	9.0n	10m	50	10m	175A	Si	TO18
208▼	5C05/52	50	9.0n	10m	50	10m	175A	Si	TO52
209	1N915	50	10n	10m		10m	200S	Si	A398
210	1N3722	50	10n	10m		10m	150	Si§	A2c
211	1N5727	50	10n	10m		10m	200S	Si	DO35
212♦	B2D914F	50	10n	10m	6.0		175	Si	TO86
213♦	B2D914T	50	10n	10m	6.0		175	Si	TO18
214	BA204	50	10n	10m	1.0	1.0m	200J	Si	DO35
215♦	BD914	50	10n	10m	6.0		175	Si	u34
216♦	BD914F	50	10n	10m	6.0		175	Si	TO86
217♦	BD914T	50	10n	10m	6.0		175	Si	TO18
218	HMG3722	50	10n	10m	10	1.0m		Si	F133a
219	MSD6101	50	10n	10m	5	10m	135J	Si	TO92*
220	MMD70	50	15n	10m	15	10m	135J	Si$	A265

SYMBOLS AND CODES
EXPLAINED IN INTERPRETER

4. HIGH-SPEED DIODES – Fast Recovery/Switching (Cont'd)

IN ORDER OF: (1) IF TEST (2) PIV
(3) trr & (4) & VF & (5) TYPE NUMBER

LINE No.	5 TYPE NO.	2 PIV (V)	3 RECOVERY TIME trr (s)	TEST CONDITIONS 1 IF (A)	4 VR (V)	IR (A)	MAX. TEMP (°C)	MAT.	DRAWING NO.
1	MT709	50	15n	10m		10m	175A	Si	A60e
2	HD1707	50	20n	10m	6.0	3.0m	90A	Ge	DO7
3♦	HSM2836	50 $	20n	10m	6.0	100m	125J	Si$#	TO236
4	1N810	50	50n	10m		10m	200S	SiΔ	A182
5	1SS140	50	50n	10m	6.0		175J	Si$#	DO35
6	MT711	50	50n	10m		10m	175A	Si	A60e
7	UTX105	50	75n	10m		10m	175A	Si	A380
8	UTX205	50	75n	10m		10m	175A	Si	A380
9	HD1810	50	110n	10m	6.0			GeØ	DO7
10	85P1	50	250n	10m		1.0m	85S	Ge	DO7
11	UTR01	50	250n	10m		10m	175A	Si	A380
12	UTR02	50	250n	10m		10m	175A	Si	A380
13	UTR3305	50	250n	10m		10m	175	Si	A380a
14	UTR4305	50	250n	10m		10m	175	Si	A380a
15	CTU20R	50	.40u	10m		10m	140S	Si	
16	CTU20S	50	.40u	10m		10m	140S	Si	
17	RGP5005	50	750n	10m		10m	175	Si	DO41
18	CT50	52	4.0n	10m	6.0		150	Si	DO35
19	1S1586	55	2.0n	10m	6.0	100u	175J	Si$#	DO35
20	1S1587	55	2.0n	10m	6.0	100u	175J	Si$#	DO35
21	1N4382	55	5.5n	10m		10m	175A	Si	A9e
22	PR0113	60	600p	10m	10		175A	Si$Δ	F27d
23	PR0114	60	700p	10m	10		175A	Si$Δ	F27d
24	BAT83	60	1.0n	10m	60	10m	200J	Si♦	DO34
25	1N4316	60	2.0n	10m	6.0	1.0m	200S	Si	A94a
26♦	ISS120	60 $	3.0n	10m		10	175J	Si$#	
27	BAW63	60	4.0n	10m	5.0		175A		M713
28	FD2A	60	4.0n	10m	6.0	10m		Si	u50a
29	GMA01	60	4n	10m	6.0		175	Si	A1n
30	MT705	60	4.0n	10m	6.0	1.0m	175A	Si	A60e
31	PD9047	60	5.0n	10m	6.0	10m	200	Si	A123
32	Q60-500	60	5.0n	10m	6.0		75A	Ge*	DO7
33	Q60-500A	60	5.0n	10m	6.0		75A	Ge*	DO7
34	1N3207	60	6.0n	10m	6.0		200S	Si	DO18
35	1N3594	60	6.0n	10m	6.0	10m		Si	A2c
36	1N4375	60	6.0n	10m	6.0	1.0m	200S	Si	A9g
37	HMG3207	60	6.0n	10m	6.0	1.0m		Si	F133a
38	HMG3594	60	6.0n	10m	10	1.0m		Si	F133a
39	HMG4375	60	6.0n	10m	6.0	1.0m		Si	F133a
40	FD2RA	60	7.0n	10m	6.0	10m		Si	u50
41	1N5726	60	10n	10m		10m	200S	Si	DO35
42	BAY69	60	10n	10m		10m	175J	Si#	A60h
43	1SS92	65	2.0n	10m	6.0		175J	Si$#	DO35
44	1SS136	65	2.0n	10m	6.0		175J	Si$#	DO34
45	HMG915	65	10n	10m	10	1.0m		Si	F133a
46	MMD6050	70	1.5n	10m		10m	135J	Si	M445
47	MMD6100	70	1.5n	10m		10m	135J	Si	M445a
48	MMD6150	70	1.5n	10m		10m	135J	Si	M445b
49	MMD7000	70	1.5n	10m		10m	135J	Si	M445c
50	1S2076A	70	3.0n	10m		10m	175J	Si§#	DO35
51	HSK120	70	3.0n	10m	6.0		175J		F138
52	SFD143	70	4.0n	10m	6.0		200S	Si#	DO35
53	BAL99	70	6.0n	10m					
54	BAR99	70	6.0n	10m					
55	1N4444	70	7.0n	10m		10m	200S	Si	DO35
56	1N4863	70	7.0n	10m	30		200S	Si	DO35
57	1S2135	70	7.0n	10m		10m	175J	Si#$	DO35
58	MSD6102	70	100n	10m	5.0	10m	25A	Si$	TO92
59	MSD6150	70	100n	10m	5.0	10m	135J	Si$	L8g
60	1SS173A	70	1.0u	10m		10m	175J	Si	A1abg
61	1N3062	75	2.0n	10m	6.0	60m	200S	Si	A398
62	1N3066	75	2.0n	10m	6.0	60m	200S	Si	A398
63	1N3567	75	2.0n	10m	6.0	1.0m	150A	Si	DO18
64	1N4310	75	2.0n	10m	6.0	1.0m	200S	Si	DO7
65	1N4532	75	2.0n	10m	6.0	1.0m	200S	Si	A1e
66	1S954	75	2.0n	10m	6.0		200A	Si$#	A60g
67	HMG3062	75	2.0n	10m	6.0	1.0m		Si	F133a
68	HMG3063	75	2.0n	10m	6.0	1.0m		Si	F133a
69	HMG3065	75	2.0n	10m	6.0	1.0m		Si	F133a
70	HMG3066	75	2.0n	10m	6.0	1.0m		Si	F133a
71	HMG3567	75	2.0n	10m	6.0	1.0m		Si	F133a
72	HMG3604	75	2.0n	10m	6.0	1.0m		Si	F133a
73	HMG3606	75	2.0n	10m	6.0	1.0m		Si	M214b
74	HMG3607	75	2.0n	10m	6.0	1.0m		Si	F133a
75	HMG3609	75	2.0n	10m	6.0	1.0m		Si	F133a
76	HMG4151	75	2.0n	10m	6.0	1.0m		Si	F133a
77	HMG4153	75	2.0n	10m	6.0	1.0m		Si	F133a
78	HMG4305	75	2.0n	10m	6.0	1.0m		Si	F133a
79	HMG9003	75	2.0n	10m	6.0	1.0m	200A	Si$	F133a
80	HMG9004	75	2.0n	10m	6.0	1.0m	200A	Si$	F133a
81	HMG9005	75	2.0n	10m	6.0	1.0m	200A	Si$	F133a
82	LL4151	75	2.0n	10m	6.0	1.0m	200J	Si	F135
83	LL4153	75	2.0n	10m	6.0	1.0m	175J	Si	F135
84	MC001	75	2.0n	10m	6.0	1.0m	175A	Si	A2c
85	MC001A	75	2.0n	10m	6.0	1.0m	175A	Si	A2c
86	1SS118	75	3.0n	10m		10m	200J	Si	DO35
87▼	7A1/18	75	3.0n	10m	75	10m	175A	Si	TO18
88▼	7A2/18	75	3.0n	10m	75	10m	175A	Si	TO18
89▼	7A5/18	75	3.0n	10m	75	10m	175A	Si	TO18
90▼	7B1/18	75	3.0n	10m	75	10m	175A	Si	TO18
91▼	7B2/18	75	3.0n	10m	75	10m	175A	Si	TO18
92▼	7B5/18	75	3.0n	10m	75	10m	175A	Si	TO18
93	B2D914	75	3.0n	10m		10m	300S	Si$#	M784
94	B3D914	75	3.0n	10m		10m	150A	Si$#	C162
95	1N914	75 $	4.0n	10m	6.0	1.0m	150A	SiΔ§	A398
96	1N914A	75 $	4.0n	10m	6.0	1.0m	175A	Si	A398
97	1N914B	75 $	4.0n	10m	6.0	1.0m	150A	SiΔ	A398
98	1N916	75 $	4.0n	10m	6.0	1.0m	150A	SiΔ§	A398
99	1N916A	75 $	4.0n	10m	6.0	1.0m	175A	Si	A398
100	1N916B	75 $	4.0n	10m	6.0	1.0m	150A	SiΔ	A398
101	1N3063	75	4.0n	10m	1.0	10m	200S	Si	A398
102	1N3064	75	4.0n	10m	1.0	10m	200S	Si	A398
103	1N3065	75	4.0n	10m	1.0	10m	200S	Si	A398
104	1N3604	75 $	4.0n	10m		10m	200S	Si	DO7
105	1N3606	75	4.0n	10m		10m	200S	Si	DO7
106	1N3607	75	4.0n	10m		10m	200S	Si	M50
107	1N3609	75	4.0n	10m		10m	200S	Si	M50
108	1N4148	75	4.0n	10m	6.0	1.0m	200S	Si	DO35
109	1N4151	75	4.0n	10m		10m	200S	Si	D035
110	1N4153	75	4.0n	10m		10m	200S	Si	DO35
111	1N4305	75	4.0n	10m		10m	200S	Si	DO35
112	1N4454	75	4.0n	10m		10m	200S	Si	DO35
113	1N4531	75	4.0n	10m	6.0	1.0m	200S	Si	A1e
114	1N5318	75	4.0n	10m		10m	150A	Si	DO34
115	1SS41	75	4.0n	10m	6.0		175J	Si$#	DO35
116	1SS130	75	4.0n	10m	6.0		175J	Si$#	DO34
117	BAW62	75	4.0n	10m	1.0	10m	200J	Si#$	DO35
118	BAW76	75	4.0n	10m		10m	200J	Si$#	DO35
119	CT43	75	4.0n	10m	6.0		150	Si	DO35
120	CT48	75	4.0n	10m	6.0		150	Si	DO35
121	CT53	75	4.0n	10m	6.0		150	Si	DO35
122	CT58	75	4.0n	10m	6.0		150	Si	DO35
123	CT73	75	4.0n	10m	6.0		150	Si	DO35
124	CT78	75	4.0n	10m	6.0		150	Si	DO35
125	FDC3600	75	4.0n	10m		10m		Si	A398
126	HMG3064	75	4.0n	10m	10	1.0m		Si	F133a
127	HMG3598	75	4.0n	10m	10	1.0m		Si	F133a
128	HMG4319	75	4.0n	10m	6.0	1.0m		Si	F133a
129	KD521A	75	4.0n	10m	10	2.0m	125A	Si#$	A159a
130	LL4454	75	4.0n	10m		10m	175J	Si	F135
131	MA167	75	4.0n	10m	6.0	1.0m	200S	Si	A1h
132	MC433	75	4.0n	10m		10m	175A	Si	A2c
133	S1N4449	75	4.0n	10m	6.0		175	Si	DO35
134	S1N4449-1	75	4.0n	10m	6.0		175	Si	DO35
135	SD914	75	4.0n	10m	6.0	1.0m	150J	Si	M901
136	1N3601	75	5.0n	10m		10m	175A	Si	DO7
137	DCB015	75	5n	10m	6.0		125	Si	M713b
138	DSB015	75	5n	10m	6.0		125	Si	M713b
139	FD6666	75	5.0n	10m		10m	150A	Si$#	A1ce
140	HMG3602	75	5.0n	10m	10	1.0m		Si	F133a
141	TID38	75	5.0n	10m		10m	200S	Si#	DO35
142	BAS16	75	6.0n	10m		10m	150J	Si$#	M500c
143	HD3A	75	6.0n	10m	1.0	10m		Si#	M500c
144	DCA015	75	8n	10m	6.0		125	Si	M713b
145	DSA015	75	8n	10m	6.0		125	Si	M713b
146	FMMD914	75	8.0n	10m		1.0m	175J	Si	M713a
147▼	7C1/18	75	9.0n	10m	75	10m	175A	Si	TO18
148▼	7C2/18	75	9.0n	10m	75	10m	175A	Si	TO18
149▼	7C05/18	75	9.0n	10m	75	10m	175A	Si	TO18
150♦	B2D4148	75	10n	10m	6.0		175	Si	u34
151	B2D4148F	75	10n	10m	6.0		175	Si	TO86
152	B2D4148T	75	10n	10m	6.0		175	Si	TO18
153♦	BD4148	75	10n	10m	6.0		175	Si	u34
154♦	BD4148F	75	10n	10m	6.0		175	Si	TO86
155♦	BD4148T	75	10n	10m	6.0		175	Si	TO18
156	HG1007	75	10n	10m	6.0	1.0m	90J	Ge	DO7
157	HG1008	75	10n	10m	6.0	1.0m	90J	Ge	DO7
158	HG1009	75	10n	10m	6.0	1.0m	90J	Ge	DO7
159	HG1010	75	10n	10m	6.0	1.0m	90J	Ge	DO7
160	HG1011	75	10n	10m	6.0	1.0m	90J	Ge	DO7
161	HG1012	75	10n	10m	6.0	1.0m	90J	Ge	DO7
162	DCE015	75	12n	10m	6.0		125	Si	M1216
163	DCD015	75	15n	10m	6.0		125	Si	M1216
164	TID39	75	20n	10m		10m	200S	Si#	DO35
165	1SS175	75	100n	10m	6.0	10m	175J	Si	DO35
166	AAZ17	75	350n	10m	1.0	10m	85J	GeØ	DO7
167♦	CD914	75	4.0	10m	6.0	1.0m	150A	Si	u38a
168♦	CD4148	75	4.0	10m	6.0	1.0m	200A	Si	u38a
169	PR0115	80	300p	10m	10		175A	Si$Δ	F27d
170	PR0116	80	400p	10m	10		175A	Si$Δ	F27d
171	PR0117	80	500p	10m	10		175A	Si$Δ	F27d
172	1N4314	80	2.0n	10m	6.0	1.0m	200S	Si	A94a
173	1N4317	80	2.0n	10m	6.0	1.0m	200S	Si	A94a
174	1N5413	80	2.0n	10m	6.0		175A	Si	DO35
175	1N3257	80	3.0n	10m	6.0	1.0m	175A	Si	A274
176	1N3258	80	4.0n	10m	6.0	1.0m	175A	Si	A274
177	1N3568	80	4.0n	10m	1.0	1.0m	200S	Si	A2g
178	1N4319	80	4.0n	10m	6.0	1.0m	200S	Si	A94a
179	1N4500	80 $	4.0n	10m	6.0	1.0m	175A	Si	DO7
180	1N4610	80	4.0n	10m		10m	175A	Si	DO7
181	1N5282	80	4.0n	10m		10m	150A	Si	DO35
182	1N5317	80	4.0n	10m		10m	150A	Si	DO34
183	1SS131	80	4.0n	10m	6.0		175J	Si$#	DO34
184	AP5317	80	4.0n	10m				Si	DO35
185	1S2072	80	6.0n	10m		10m	175J	Si#$	DO35
186♦	MA152K	80	10n	10m	1.0	1.0m	125S	Si	M988
187♦	MA152WK	80	10n	10m	1.0	1.0m	125S	Si	M988
188	1N3730	80	15n	10m	6.0	60m	175S	Si	DO7
189	HD1706	80	15n	10m	6.0	3.0m	90A	Ge	DO7
190♦	MA171	80	20n	10m	1.0	1.0m	200S	Si	A24d
191♦	MA152A	80	40n	10m	1.0	1.0	125S	Si	M988
192	1SS139	80	50n	10m	6.0		175J	Si$#	DO35
193	MT712	85	4.0n	10m		10m	175A	Si	A60e
194	1N4606	85	6.0n	10m		1.0m	200S	Si	DO35
195	MT713	85	8.0n	10m		10m	175A	Si	A60e
196	1N4607	85	10n	10m		10m	200S	Si	DO35
197	1N4608	85	10n	10m		10m	200S	Si	DO35
198	MT714	85	10n	10m		10m	175A	Si	A60e
199	MT716	85	10n	10m		10m	175A	Si	A60e
200	MT715	85	20n	10m		10m	175A	Si	A60e
201	MT717	85	20n	10m		10m	175A	Si	A60e
202	1S1585	90	2.0n	10m	6.0	100u	175J	Si$#	DO35
203	HD1062	90	2.5n	10m	6.0	3.0m	90A	GeØ	DO7
204	MA4375C	90	3.0n	10m		100m	150A	Si	DO7
205	MA4375E	90	3.0n	10m		100m	150	Si$	DO7
206	1S2145	90	5.0n	10m	6.0		150J	Si	A277
207	1N3872	90	15n	10m	6.0	6.0m	200S	Si	DO7
208	PR0118	100	300p	10m	10		175A	Si$Δ	F27d
209	PR0119	100	400p	10m	10		175A	Si$Δ	F27d
210	PR0120	100	500p	10m	10		175A	Si$Δ	F27d
211	PR0121	100	600p	10m	10		175A	Si$Δ	F27d
212	1N4308	100	2.0n	10m	6.0	1.0m	200S	Si	DO7
213	1N4311	100	2.0n	10m	6.0	1.0m	200S	Si	DO7
214	1N5414	100	2.0n	10m	6.0		175A	Si	DO35
215	1S955	100	2.0n	10m	6.0		200A	Si$#	A60g
216	1SS115	100	2.0n	10m		10m	175J	Si	DO35
217	HMG4308	100	2.0n	10m	6.0	1.0m		Si	F133a
218	HMG4314	100	2.0n	10m	6.0	1.0m		Si	F133a
219	HMG4317	100	2.0n	10m	6.0	1.0m		Si	F133a
220	HMG9001	100	2.0n	10m	6.0	1.0m	200A	Si$	F133a

SYMBOLS AND CODES EXPLAINED IN INTERPRETER

4. HIGH-SPEED DIODES - Fast Recovery/Switching (Cont'd)

IN ORDER OF: (1) IF TEST (2) PIV (3) trr & (4) & VF & (5) TYPE NUMBER

LINE No.	5 TYPE NO.	2 PIV (V)	3 RECOVERY TIME trr (s)	TEST CONDITIONS 1 IF (A)	4 VR (V)	IR (A)	MAX. TEMP (°C)	MAT.	DRAWING NO.
1	HMG9002	100	2.0n	10m	6.0	1.0m	200A	Si$	F133a
2	MC7000	100	2.0n	10m	6.0	1.0m	175A	Si	A2c
3	1N3731	100 *	3.0n	10m	6.0	1.0m	175A	Si	DO7
4▼	10A1/18	100	3.0n	10m	100	10m	175A	Si	TO18
5▼	10A2/18	100	3.0n	10m	100	10m	175A	Si	TO18
6▼	10A5/18	100	3.0n	10m	100	10m	175A	Si	TO18
7▼	10B1/18	100	3.0n	10m	100	10m	175A	Si	TO18
8▼	10B2/18	100	3.0n	10m	100	10m	175A	Si	TO18
9▼	10B5/18	100	3.0n	10m	100	10m	175A	Si	TO18
10	HMG3257	100	3.0n	10m	6.0	1.0m		Si	F133a
11	HMG3731	100	3.0n	10m	6.0	1.0m		Si	F133a
12	1N999	100	4.0n	10m	1.0	10m		Si	DO7
13	1N3206	100	4.0n	10m	6.0	1.0m	150A	Si	DO18
14	1N4313	100	4.0n	10m	6.0	1.0m	200S	Si	DO7
15	1N5315	100	4.0n	10m		10m	200A	Si	A1h
16	1N5316	100	4.0n	10m		10m	200A	Si	A1h
17	BAY61	100	4.0n	10m	6.0	1.0m	175J	Si	DO35
18	C5D914	100	4.0n	10m		10m	150S	Si	M713a
19	C5D914CA	100	4.0n	10m		10m	150S	Si	M713a
20	C5D914CC	100	4.0n	10m		10m	150S	Si	M713a
21	CT44	100	4.0n	10m	6.0		150	Si	DO35
22	CT49	100	4.0n	10m	6.0		150	Si	DO35
23	CT54	100	4.0n	10m	6.0		150	Si	DO35
24	CT59	100	4.0n	10m	6.0		150	Si	DO35
25	CT74	100	4.0n	10m	6.0		150	Si	DO35
26	CT79	100	4.0n	10m	6.0		150	Si	DO35
27	HMG914	100	4.0n	10m	6.0	1.0m		Si	F133a
28	HMG914A	100	4.0n	10m	6.0	1.0m		Si	F133a
29	HMG914B	100	4.0n	10m	6.0	1.0m		Si	F133a
30	HMG916	100	4.0n	10m	6.0	1.0m		Si	F133a
31	HMG916A	100	4.0n	10m	6.0	1.0m		Si	F133a
32	HMG916B	100	4.0n	10m	6.0	1.0m		Si	F133a
33	HMG3206	100	4.0n	10m	6.0	1.0m		Si	F133a
34	HMG3258	100	4.0n	10m	6.0	1.0m		Si	F133a
35	HMG4148	100	4.0n	10m	6.0	1.0m		Si	F133a
36	HMG4149	100	4.0n	10m	6.0	1.0m		Si	F133a
37	HMG4313	100	4.0n	10m	6.0	1.0m		Si	F133a
38	HMG4373	100	4.0n	10m	6.0	1.0m		Si	F133a
39	LL4149	100	4.0n	10m	6.0	1.0m	200J	Si	F135
40	LL4446	100	4.0n	10m	6.0	1.0m	200J	Si	F135
41	LL4447	100	4.0n	10m	6.0	1.0m	200J	Si	F135
42	LL4449	100	4.0n	10m	6.0	1.0m	200J	Si	F135
43	MC914	100	4.0n	10m	6.0	1.0m	175A		A2c
44	MC914A	100	4.0n	10m	6.0	1.0m	175A		A2c
45	MC916	100	4.0n	10m	6.0	1.0m	175A		A2c
46	MC916A	100	4.0n	10m	6.0	1.0m	175A		A2c
47	MSD6100	100	4.0n	10m	5.0	10m	135	Si$	TO92
48	MT701	100	4.0n	10m	6.0	1.0m	175A	Si	A60e
49	SFD142	100	4.0n	10m				GE	DO35
50	HMG3601	100	5.0n	10m	10	1.0m		Si	F133a
51♦	1N4149	100	8.0n	10m	6.0	10m	200J	Si	DO35
52♦	1N4446	100	8.0n	10m	6.0	10m	200J	Si	DO35
53♦	1N4447	100	8.0n	10m	6.0	10m	200J	Si	DO35
54♦	1N4448	100	8.0n	10m	6.0	10m	200J	Si	DO35
55♦	1N4449	100	8.0n	10m	6.0	10m	200J	Si	DO35
56♦	LL4448	100	8.0n	10m	6.0	1.0m	200J	Si	F135
57▼	10C2/18	100	9.0n	10m	100	10m	175A	Si	TO18
58▼	10C05/18	100	9.0n	10m	100	10m	175A	Si	TO18
59▼	10C11/18	100	9.0n	10m	100	10m	175A	Si	TO18
60▼	10C11/52	100	9.0n	10m	100	10m	175A	Si	TO52
61	HD4102	100	10n	10m		1.0m		Si	DO7
62	HG1001	100	10n	10m	6.0	1.0m	90J	Ge	DO7
63	HG1002	100	10n	10m	6.0	1.0m	90J	Ge	DO7
64	HG1003	100	10n	10m	6.0	1.0m	90J	Ge	DO7
65	HG1004	100	10n	10m	6.0	1.0m	90J	Ge	DO7
66	HG1005	100	10n	10m	6.0	1.0m	90J	Ge	DO7
67	HG1006	100	10n	10m	6.0	1.0m	90J	Ge	DO7
68	HD1705	100	15n	10m	6.0	3.0m	90A	Ge	DO7
69	TID44	100	30n	10m		10m	150A	Si△	A60b
70	UTX110	100	75n	10m		10m	175A	Si	A380
71	UTX210	100	75n	10m		10m	175A	Si	A380
72	1SS175A	100	100n	10m	6.0	10m	175J	Si	DO35
73	10DF1	100	200n	10m		10m	150J	Si	Alaaw
74	30DF1	100	200n	10m		10m	150J	Si	Alaax
75	15P1	100	250n	10m		1.0m	85S	Ge	DO7
76	UTR10	100	250n	10m		10m	175A	Si	A380
77	UTR11	100	250n	10m		10m	175A	Si	A380
78	UTR12	100	250n	10m		10m	175A	Si	A380
79	UTR3310	100	250n	10m		10m	175	Si	A380a
80	UTR4310	100	250n	10m		10m	175	Si	A380a
81	AAZ15	100	350n	10m	1.0	10m	85J	GeØ	DO7
82	CTU21R	100	.40u	10m		10m	140S	Si	
83	CTU21S	100	.40u	10m		10m	140S	Si	
84	676-1S	100	500n	10m		10m	150		M1165♦†
85	701-1	100	500n	10m		10m	150		M1171 †
86♦	BY396	100	500n	10m		10m	150J	Si	DO2f
87♦	D2S100	100	500n	10m		10m	130J	Si	A422
88	RGP5010	100	750n	10m		10m	175	Si	DO41
89	30DL1	100	800n	10m		10m	150J	Si	Alaax
90	BB1	100	800n	10m		10m	100A	Si	A52p
91	1N4318	120	2.0n	10m	6.0	1.0m	200S	Si	A94a
92	1SS116	120	2.0n	10m		10m	175J	Si	DO35
93	HD1705A	120	15n	10m	6.0		90A	Ge	DO7
94	1SS172	120	20n	10m	6.0				DO41
95	1N4363	120	40n	10m		10m	175S	Si	DO7
96	1N5320	120	250n	10m		10m	175A	Si	A146d
97	1N4445	125	4.0n	10m	6.0	1.0m	200S	Si	DO35
98	1N4864	125	4.0n	10m	6.0	10m	200S	Si	DO35
99	1S2099	125	4.0n	10m	6.0		175J	Si	A60g
100	1N6099	125	3.0u	10m	35		175A	Si	DO35
101	1N4312	150	2.0n	10m	6.0	1.0m	200S	Si	DO7
102	MC1512	150	2.0n	10m	6.0	1.0m	200S	Si	TO18
103	MC1511	150	4.0n	10m	6.0	1.0m	200S	Si	TO18
104	HD1330	150	10n	10m	6.0	3.0m	90A	Ge	DO7
105	HD1330A	150	10n	10m	6.0	3.0m	90A	Ge	DO7
106	TID42	150	30n	10m		10m	150A	Si△	A60b
107	TID43	150	30n	10m		10m	150A	Si△	A60b
108	UTX115	150	75n	10m		10m	175A	Si	A380
109	UTX215	150	75n	10m		10m	175A	Si	A380
110	16P1	150	250n	10m		1.0m	85S	Ge	DO7
111	1SS144	150	400n	10m	6.0		175J	Si△	DO35
112	1SS147	150	400n	10m	6.0		175J	Si△	DO34
113	1S2098	175	4.0n	10m	6.0		175J	Si	A60g
114	MC1514	200	4.0n	10m	6.0	1.0m	200S	Si	TO18
115	MC1515	200	4.0n	10m	6.0	1.0m	200S	Si	TO18
116	HD1320	200	10n	10m	6.0	3.0m	90A	Ge	DO7
117	HD1320A	200	10n	10m	6.0	3.0m	90A	Ge	DO7
118	TID41	200	30n	10m		10m	150A	Si△	A60b
119	FDC3070	200	50n	10m		10m		Si	A398
120	UTX120	200	75n	10m		10m	175A	Si	A380
121	UTX220	200	75n	10m		10m	175A	Si	A380
122	10DF2	200	200n	10m		10m	150J	Si	Alaaw
123	30DF2	200	200n	10m		10m	150J	Si	Alaax
124	UTR20	200	250n	10m		10m	175A	Si	A380
125	UTR21	200	250n	10m		10m	175A	Si	A380
126	UTR22	200	250n	10m		10m	175A	Si	A380
127	UTR3320	200	250n	10m		10m	175	Si	A380a
128	UTR4320	200	250n	10m		10m	175	Si	A380a
129	1SS143	200	400n	10m	6.0		175J	Si△	DO35
130	1SS146	200	400n	10m	6.0		175J	Si△	DO34
131	CTU22R	200	.40u	10m		10m	140S	Si	
132	CTU22S	200	.40u	10m		10m	140S	Si	
133♦	RF1Z	200	400n	10m		10m		Si	A1aad
134	676-2S	200	500n	10m		10m	150		M1165♦†
135	701-2	200	500n	10m		10m	150		M1171 †
136♦	BY397	200	500n	10m		10m	150J	Si	DO2f
137♦	D2S200	200	500n	10m		10m	130J	Si	A1ew
138	RGP5020	200	750n	10m		10m	175	Si	DO41
139	30DL2	200	800n	10m		10m	150J	Si	Alaax
140	BB2	200	800n	10m		10m	100A	Si	A52p
141	1S2097	225	4.0n	10m	6.0		175J	Si	A60g
142	HD1310	225	8.0n	10m	6.0	3.0m	90A	Ge	DO7
143	HD1310A	225	8.0n	10m	6.0	3.0m	90A	Ge	DO7
144	TID40	250	30n	10m		100m	150A	Si△	A60b
145	UTX125	250	75n	10m		10m	175A	Si	A380
146	UTX225	250	75n	10m		10m	175A	Si	A380
147	1SS142	250	400n	10m	6.0		175J	Si△	DO35
148	1SS145	250	400n	10m	6.0		175J	Si△	DO34
149	UTR30	300	300n	10m		10m	175A	Si	A380
150	UTR31	300	300n	10m		10m	175A	Si	A380
151	UTR32	300	300n	10m		10m	175A	Si	A380
152	676-3S	300	500n	10m		10m	150		M1165♦†
153	701-3	300	500n	10m		10m	150		M1171 †
154	1N2791	350	4.0u	10m		10m	200S	Si	C29m
155	PY206	400	300n	10m	50		50A	Si	A1bg
156♦	PY210-400	400	300n	10m	50		150J	Si	A344z
157	UTR3340	400	300n	10m		10m	175	Si	A380a
158	UTR40	400	350n	10m		10m	175A	Si	A380
159	UTR41	400	350n	10m		10m	175A	Si	A380
160	UTR42	400	350n	10m		10m	175A	Si	A380
161	CTU24R	400	.40u	10m		10m	140S	Si	
162	CTU24S	400	.40u	10m		10m	140S	Si	
163♦	RF1	400	400n	10m		10m		Si	A1aad
164	UTR4340	400	400n	10m		10m	175	Si	A380a
165	676-4S	400	500n	10m		10m	150		M1165♦†
166	701-4	400	500n	10m		10m	150		M1171 †
167	BA157	400	500n	10m		10m	150J	Si△	A1bg
168♦	BY398	400	500n	10m		10m	150J	Si	DO2f
169	RGP5040	400	750n	10m		10m	175	Si	DO41
170	30DL4	400	800n	10m		10m	150J	Si	Alaax
171	BB4	400	800n	10m		10m	100A	Si	A52p
172	UTR3350	500	350n	10m		10m	175	Si	A380a
173	UTR50	500	400n	10m		10m	175A	Si	A380
174	UTR51	500	400n	10m		10m	175A	Si	A380
175	UTR52	500	400n	10m		10m	175A	Si	A380
176	UTR4350	500	400n	10m		10m	175	Si	A380a
177	676-5S	500	500n	10m		10m	150		M1165♦†
178	701-5	500	500n	10m		10m	150		M1171 †
179	BA158	600	300n	10m		10m	150J	Si△	A1bg
180	PY207	600	300n	10m	50		50A	Si	A1bg
181♦	PY210-600	600	300n	10m	50		150J	Si	A344z
182	CTU26R	600	.40u	10m		10m	140S	Si	
183	CTU26S	600	.40u	10m		10m	140S	Si	
184♦	RF1A	600	400n	10m		10m		Si	A1aad
185	UTR60	600	400n	10m		10m	175A	Si	A380
186	UTR61	600	400n	10m		10m	175A	Si	A380
187	UTR62	600	400n	10m		10m	175A	Si	A380
188	UTR3360	600	400n	10m		10m	175	Si	A380a
189	UTR4360	600	400n	10m		10m	175	Si	A380a
190	676-6S	600	500n	10m		10m	150		M1165♦†
191	701-6	600	500n	10m		10m	150		M1171 †
192	RGP5060	600	750n	10m		10m	175	Si	DO41
193	BB6	600	800n	10m		10m	100A	Si	A52p
194	1N5433	720	400n	10m		10m	175A	Si	A146k
195♦	PY210-800	800	300n	10m	50		150J	Si	A344z
196♦	BY399	800	500n	10m		10m	150J	Si	DO2f
197♦	D2S800	800	500n	10m		10m	130J	Si	A422
198	BB8	800	800n	10m		10m	100A	Si	A52p
199	RGP5080	800	1.0u	10m		10m	175	Si	DO41
200	MHVS10	1.0k	250n	10m		20m	125A	Si	A249e
201	BA159	1.0k	500n	10m		10m	150J	Si△	A1bg
202	BB10	1.0k	800n	10m		10m	100A	Si	A52p
203	RGP01-10	1.0k	1.0u	10m		10m	175	Si	DO41
204	RGP5100	1.0k	1.0u	10m		10m	175	Si	DO41
205	USR12	1.2k	500n	10m		10m	150		Alfv
206	BY203-12	1.2k	550n	10m	1.0	1.0m	150J	Si	A1uv
207	RGP01-12	1.2k	1.0u	10m		10m	175	Si	DO41
208	RGP01-14	1.4k	1.0u	10m		10m		Si	DO41
209	USR15	1.5k	500n	10m		10m	150		Alfv
210	2DL15A	1.5k	800n	10m		10m	140J	Si	Alaav
211♦	BY228	1.5k	1.2u	10m		10	125J	Si	D02f
212♦	RH2F	1.5k	5.0u	10m		10m		Si	A344l
213	BY203-16	1.6k	550n	10m	1.0	1.0m	150J	Si	A1uv
214	RGP01-16	1.6k	1.0u	10m		10m		Si	DO41
215	2DL18A	1.8k	800n	10m		10m	140J	Si	Alaav
216	RGP01-18	1.8k	1.0u	10m		10m	175		DO41
217	CRS20	2.0k	250n	10m		20m	125A	Si	DO7
218	MHVS20	2.0k	250n	10m		20m	125A	Si	A249e
219	USR20	2.0k	500n	10m		10m	150		A1aah
220	BY203-20	2.0k	550n	10m	1.0	1.0m	150J	Si	A1uv

SYMBOLS AND CODES EXPLAINED IN INTERPRETER

4. HIGH-SPEED DIODES - Fast Recovery/Switching (Cont'd)

IN ORDER OF: (1) IF TEST (2) PIV
(3) trr & (4) & VF & (5) TYPE NUMBER

LINE No.	5 TYPE NO.	2 PIV (V)	RECOVERY TIME 3 trr (s)	TEST CONDITIONS 1 IF (A)	4 VR (V)	IR (A)	MAX. TEMP (°C)	MAT.	DRAWING NO.
1	RGP01-20	2.0k	1.0u	10m		10m	175		DO41
2	USR25	2.5k	500n	10m		10m	150		A1aah
3	MHVS30	3.0k	250n	10m		20m	125A	Si	A249e
4	USR30	3.0k	500n	10m		10m	150		A1aai
5	USR35	3.5k	500n	10m		10m	150		A1aai
6	CRS40	4.0k	250n	10m		20m	125A	Si	DO7
7	MHVS40	4.0k	250n	10m		20m	125A	Si	A249e
8	USR40A	4.0k	500n	10m		10m	150		A83da
9	USR45A	4.5k	500n	10m		10m	150		A83da
10	MHVS50	5.0k	250n	10m		20m	125A	Si	A249e
11	HV05	5.0k	.50u	10m		10m	110S	Si	A3al
12	USR50A	5.0k	500n	10m		10m	150		A83da
13	CRS60	6.0k	250n	10m		20m	125A	Si	A1ux
14	MHVS60	6.0k	250n	10m		20m	125A	Si	A249e
15	USR60A	6.0k	500n	10m		10m	150		A83da
16	USR70A	7.0k	500n	10m		10m	150		A83db
17	HVRS80	8.0k	250n	10m		20m	125A	Si	A1uz
18	USR80A	8.0k	500n	10m		10m	150		A83db
19	CRS100	10k	250n	10m		20m	125A	Si	A1ux
20	HVRS100	10k	250n	10m		20m	125A	Si	A1uz
21	USR100A	10k	500n	10m		10m	150		A83db
22	1JLA10	10k	800n	10m		10m	80J	Si	A1xb
23	USR120A	12k	500n	10m		10m	150		A83dc
24	CRS150	15k	250n	10m		20m	125A	Si	A1uy
25	HVRS150	15k	250n	10m		20m	125A	Si	A1va
26	USR150A	15k	500n	10m		10m	150		A83dc
27	USR180A	18k	500n	10m		10m	150		A83dc
28	CRS200	20k	250n	10m		20m	125A	Si	A1uy
29	HVRS200	20k	250n	10m		20m	125A	Si	A1va
30	HVRS300	30k	250n	10m		20m	125A	Si	A1vb
31	HVRS400	40k	250n	10m		20m	125A	Si	A1vb
32	LA80#B	8.0k	300n	12m		25m	85A	Si	A298ac
33▼	SHB15UF	1.5k	60n	12.5m	1.5k	25m	150	Si	A411
34	M15UFG	1.5k	100n	12.5m		25m	175	Si	A1st
35♦	SHB15F	1.5k	150n	12.5m	1.5k	25m	150	Si	A411
36	M15FG	1.5k	200n	12.5m		25m	175	Si	A1st
37	M15SG	1.5k	3.0u	12.5m		25m	175	Si	A1st
38♦	SHB15	1.5k	5.0u	12.5m	1.5k	25m	150	Si	A411
39▼	SHB20UF	2.0k	60n	12.5m	2.0k	25m	150	Si	A411
40	M20UFG	2.0k	100n	12.5m		25m	175	Si	A1st
41▼	SHB20F	2.0k	150n	12.5m	2.0k	25m	150	Si	A411
42	M20FG	2.0k	200n	12.5m		25m	175	Si	A1st
43	M20SG	2.0k	3.0u	12.5m		25m	175	Si	A1st
44♦	SHB20	2.0k	5.0u	12.5m	2.0k	25m	150	Si	A411
45▼	SHB25UF	2.5k	60n	12.5m	2.5k	25m	150	Si	A411
46	M25UFG	2.5k	100n	12.5m		25m	175	Si	A1st
47▼	SHB25F	2.5k	150n	12.5m	2.5k	25m	150	Si	A411
48	M25FG	2.5k	200n	12.5m		25m	175	Si	A1st
49	M25SG	2.5k	3.0u	12.5m		25m	175	Si	A1st
50♦	SHB25	2.5k	5.0u	12.5m	2.5k	25m	150	Si	A411
51▼	SHB30UF	3.0k	60n	12.5m	3.0k	25m	150	Si	A411
52	M30UFG	3.0k	100n	12.5m		25m	175	Si	A1st
53▼	SHB30F	3.0k	150n	12.5m	3.0k	25m	150	Si	A411
54	M30FG	3.0k	200n	12.5m		25m	175	Si	A1st
55	M30SG	3.0k	3.0u	12.5m		25m	175	Si	A1st
56♦	SHB30	3.0k	5.0u	12.5m	3.0k	25m	150	Si	A411
57	M40UFG	4.0k	100n	12.5m		25m	175	Si	A1st
58▼	SHB40F	4.0k	150n	12.5m	4.0k	25m	150	Si	A411
59	M40FG	4.0k	200n	12.5m		25m	175	Si	A1st
60	M40SG	4.0k	3.0u	12.5m		25m	175	Si	A1st
61♦	SHB40	4.0k	5.0u	12.5m	4.0k	25m	150	Si	A411
62▼	SHB50UF	5.0k	60n	12.5m	5.0k	25m	150	Si	A411
63	M50UFG	5.0k	100n	12.5m		25m	175	Si	A1st
64▼	SHB50F	5.0k	150n	12.5m	5.0k	25m	150	Si	A411
65	M50FG	5.0k	200n	12.5m		25m	175	Si	A1st
66	M50SG	5.0k	3.0u	12.5m		25m	175	Si	A1st
67♦	SHB50	5.0k	5.0u	12.5m	5.0k	25m	150	Si	A411
68▼	SHB60UF	6.0k	60n	12.5m	6.0k	25m	150	Si	A411
69	M60UFG	6.0k	100n	12.5m		25m	175	Si	A1st
70▼	SHB60F	6.0k	150n	12.5m	6.0k	25m	150	Si	A411
71	M60FG	6.0k	200n	12.5m		25m	175	Si	A1st
72	M60SG	6.0k	3.0u	12.5m		25m	175	Si	A1st
73♦	SHB60	6.0k	5.0u	12.5m	6.0k	25m	150	Si	A411
74▼	SHB80UF	8.0k	60n	12.5m	8.0k	25m	150	Si	A411
75	M80UFG	8.0k	100n	12.5m		25m	175	Si	A1st
76▼	SHB80F	8.0k	150n	12.5m	8.0k	25m	150	Si	A411
77	M80FG	8.0k	200n	12.5m		25m	175	Si	A1st
78	M80SG	8.0k	3.0u	12.5m		25m	175	Si	A1st
79♦	SHB80	8.0k	5.0u	12.5m	8.0k	25m	150	Si	A411
80▼	SHB100UF	10k	60n	12.5m	10k	25m	150	Si	A411
81	M100UFG	10k	100n	12.5m		25m	175	Si	A1st
82▼	SHB100F	10k	150n	12.5m	10k	25m	150	Si	A411
83	M100FG	10k	200n	12.5m		25m	175	Si	A1st
84	M100SG	10k	3.0u	12.5m		25m	175	Si	A1st
85♦	SHB100	10k	5.0u	12.5m	10k	25m	150	Si	A411
86	CD61	12	20n	15m	12	1.0u			TO106
87▼	CD62#C	12	20n	15m	12	0.1u			TO106
88	1N4547	25	60n	15m			175A	Si	F27d
89	1N4949	35	.30n	15m			175A	Si	DO7
90	HP5082-2835	5.0	100p	20m			125A	Si♦♦	A1ah
91	HP5082-2303	20	.10n	20m			125A	Si♦♦	A1ad
92	GD507A	20	100n	20m	10	1.0m	60A	GeØ	A352
93	AAY27	25	15n	20m		20m	90J	Ge	DO7
94	1N695A	25 $	300n	20m	6.0	200u	90A	Ge	A1cw
95	1N3203	25	300n	20m	4.0	250u	90S	Ge	DO7
96	HP5082-2301	30	.1n	20m			125A	Si♦♦	A1ad
97	HP5082-2302	30	.1n	20m			125A	Si♦♦	A1ad
98	HP5082-2305	30	.10n	20m			125	♦	A1ad
99	1N948	36	1.0u	20m	40	.50m		Si	A1
100	BAS40-05	40	100p	20m			150J	Si♦	TO236
101	BAS40-06	40	100p	20m			150J	Si♦	TO236
102	SD40	40	20n	20m		1.0n	200J	Si#$	TO18
103	1N3953	40	300n	20m	4.0	250u	90S	Ge	DO7
104	HMG948	40	1.0u	20m	40	.50m		Si	F133a
105	GP10A	50	20u	20m		1.0m	175A		DO41
106	1N3204	60	300n	20m	4.0	5.0m	100S	Ge	DO7
107	HD2135A	60	1.0u	20m	20			GeØ	DO7
108	1N818	80	500n	20m	40	500u	150A	Si	A1bz
109	HMG818	80	500n	20m	40	.50m		Si	F133a
110	DR418	90 *	500n	20m	10	5.0m		GeØ	DO7
111	1BH62	100	350n	20m		20m	125J	Si	A249f
112	TVR1B	100	2.0u	20m		1.0m	65A	Si	DO41
113	GP10B	100	20u	20m		1.0m	175A		DO41
114	1N3550	180	1.5u	20m	40	500u	150A	Si	DO7
115	1DH62	200	350n	20m		20m	125J	Si	A249f
116	3DH61	200	500n	20m		20m	125J	Si	A249j
117	TVR1D	200	2.0u	20m		1.0m	65A	Si	DO41
118	1S2775	200	8.0u	20m		1.0m	125J	Si	DO15
119	GP10D	200	20u	20m		1.0m	175A		DO41
120	1GH62	400	350n	20m		20m	125J	Si	A249f
121	3GH61	400	500n	20m		20m	125J	Si	A249j
122	1GH11	400	1.5u	20m		1.0m	150J	Si	A56a
123	1S1834	400	1.5u	20m		1.0m	125J	Si	DO15
124	TVR1G	400	2.0u	20m		1.0m	65A	Si	DO41
125	1S2776	400	8.0u	20m		1.0m	125J	Si	DO15
126	1S2756	400	10u	20m		1.0m	50A	Si	DO15
127	GP10G	400	20u	20m		1.0m	175A		DO41
128	1JH62	600	350n	20m		20m	125J	Si	A249f
129	3JH61	600	500n	20m		20m	125J	Si	A249j
130	1JH11	600	1.5u	20m		1.0m	150J	Si	A56a
131	1S1835	600	1.5u	20m		1.0m	125J	Si	DO15
132	TVR1J	600	2.0u	20m		1.0m	65A	Si	DO41
133	1S2777	600	8.0u	20m		1.0m	125J	Si	DO15
134	1S2757	600	10u	20m		1.0m	50A	Si	DO15
135	GP10J	600	20u	20m		1.0m	175A		DO41
136	1S2745	700	1.3u	20m		1.0m	100J	Si	A56a
137	1S2746	750	1.3u	20m		1.0m	100J	Si	A56a
138	GP10K	800	20u	20m		1.0m	175A		DO41
139	1S2747	900	1.3u	20m		1.0m	100J	Si	A56a
140	BAR223-10	1.0k	200n	20m		40m		Si△	A1rx
141	BR588-10	1.0k	200n	20m		40m		Si△	A69s
142	25DF10	1.0k	300n	20m		4.0m	150A	Si	DO7
143	DF10	1.0k	350n	20m		4.0m	100A	Si	A109b
144	TFR1N	1.0k	10u	20m		1.0m	50A	Si	DO41
145	GP10M	1.0k	20u	20m		1.0m	175A		DO41
146	TFR1Q	1.2k	10u	20m		1.0m	50A	Si	DO41
147	MR1-1200	1.2k	25u	20m		2.0m	175J	Si	A1f
148	MR1-1400	1.4k	25u	20m		2.0m	175J	Si	A1f
149	BAR223-15	1.5k	200n	20m		40m		Si△	A1rx
150	BR588-15	1.5k	200n	20m		40m		Si△	A69s
151	25DF15	1.5k	300n	20m		4.0m	150A	Si	DO7
152	DF15	1.5k	350n	20m		4.0m	100A	Si	A109b
153	1TH61	1.5k	6.0u	20m		1.0m	40A	Si	A249f
154	1R5TH61	1.5k	10u	20m		1.0m	20A	Si	A249f
155	TFR1T	1.5k	10u	20m		1.0m	50A	Si	DO41
156	1S2711	1.6k	10u	20m		1.0m	125J	Si	A56a
157	1S2712	1.6k	10u	20m		1.0m	40A	Si	A314
158	MR1-1600	1.6k	25u	20m		2.0m	175J	Si	A1f
159	1S1832	1.8k	6.0u	20m		1.0m	125J	Si	DO15
160	BAR223-20	2.0k	200n	20m		40m		Si△	A1rx
161	BR588-20	2.0k	200n	20m		40m		Si△	A69s
162	25DF20	2.0k	300n	20m		4.0m	150A	Si	DO7
163	DF20	2.0k	350n	20m		4.0m	100A	Si	A109b
164	BAR223-25	2.5k	200n	20m		40m		Si△	A1rx
165	BR588-25	2.5k	200n	20m		40m		Si△	A69s
166	25DF25	2.5k	300n	20m		4.0m	150A	Si	DO7
167	DF25	2.5k	350n	20m		4.0m	100A	Si	A109b
168	BAR223-30	3.0k	200n	20m		40m		Si△	A1rx
169	BR588-30	3.0k	200n	20m		40m		Si△	A69s
170	MA30#B	3.0k	250n	20m		40m	150A	Si	A298ac
171	25DF30	3.0k	300n	20m		4.0m	150A	Si	DO7
172	DF30	3.0k	350n	20m		4.0m	100A	Si	A109b
173	BAR223-35	3.5k	200n	20m		40m		Si△	A1rx
174	BR588-35	3.5k	200n	20m		40m		Si△	A69s
175	DF35	3.5k	350n	20m		4.0m	100A	Si	A109b
176	BAR223-40	4.0k	200n	20m		40m		Si△	A1rx
177	BR588-40	4.0k	200n	20m		40m		Si△	A69s
178	DF40	4.0k	350n	20m		4.0m	100A	Si	A109b
179	BAR223-45	4.5k	200n	20m		40m		Si△	A1rx
180	BR588-45	4.5k	200n	20m		40m		Si△	A69s
181	BAR223-50	5.0k	200n	20m		40m		Si△	A1rx
182	BR588-50	5.0k	200n	20m		40m		Si△	A69s
183	V-1	5.0k	4.0u	20m		2.0m	125S		F51b
184	BAR223-55	5.5k	200n	20m		40m		Si△	A1rx
185	BR588-55	5.5k	200n	20m		40m		Si△	A69s
186	BAR223-60	6.0k	200n	20m		40m		Si△	A1rx
187	BR588-60	6.0k	200n	20m		40m		Si△	A69s
188	HV106F	6.0k	250n	20m		40m			A83cu
189	BAR223-65	6.5k	200n	20m		40m		Si△	A1rx
190	BR588-65	6.5k	200n	20m		40m		Si△	A69s
191	BAR223-70	7.0k	200n	20m		40m		Si△	A1rx
192	BR588-70	7.0k	200n	20m		40m		Si△	A69s
193	BR588-80	8.0k	200n	20m		40m		Si△	A69s
194	HV108F	8.0k	250n	20m		40m			A83cr
195	BR588-85	8.5k	200n	20m		40m		Si△	A69s
196	BR588-90	9.0k	200n	20m		40m		Si△	A69s
197	BR588-95	9.5k	200n	20m		40m		Si△	A69s
198	BR588-100	10k	200n	20m		40m		Si△	A69s
199	HV110F	10k	250n	20m		40m			A83cr
200	BR588-110	11k	200n	20m		40m		Si△	A69s
201	BR588-120	12k	200n	20m		40m		Si△	A69s
202	HV112F	12k	250n	20m		40m			A83cr
203	BR588-130	13k	200n	20m		40m		Si△	A69s
204	BR588-140	14k	200n	20m		40m		Si△	A69s
205	BR588-150	15k	200n	20m		40m		Si△	A69s
206	HV115F	15k	250n	20m		40m			A83cs
207	BR588-160	16k	200n	20m		40m		Si△	A69s
208	BR588-170	17k	200n	20m		40m		Si△	A69s
209	BR588-180	18k	200n	20m		40m		Si△	A69s
210	BR588-190	19k	200n	20m		40m		Si△	A69s
211	BR588-200	20k	200n	20m		40m		Si△	A69s
212	K4540	45k	1.5u	20m		2.0m	65A		F95a
213	K4560	45k	1.5u	20m		2.0m	75A		F95a
214	K4590	45k	1.5u	20m		2.0m	85A		F95a
215	1N3097	30	500n	25m	15		85A	Ge	A1
216	BAS40-01	40	100p	25m	20m		150J	Si♦	
217	BAS40-02	40	100p	25m	20m		150J	Si♦	DO35
218	BAS40-03	40	100p	25m	20m		150J	Si♦	M501b
219	BAS40-04	40	100p	25m	20m		150J	Si♦	TO236
220	BAS70-01	70	100p	25m			150J	Si♦	A277r

SYMBOLS AND CODES
EXPLAINED IN INTERPRETER

4. HIGH-SPEED DIODES – Fast Recovery/Switching (Cont'd)

IN ORDER OF: (1) IF TEST (2) PIV (3) trr & (4) & VF & (5) TYPE NUMBER

LINE No.	5 TYPE NO.	2 PIV (V)	3 RECOVERY TIME trr (s)	TEST CONDITIONS 1 IF (A)	4 VR (V)	IR (A)	MAX. TEMP (°C)	MAT.	DRAWING NO.
1	BAS70-02	70	100p	25m			150J	Si♦	DO35
2	BAS70-03	70	100p	25m			150J	Si♦	M501b
3	DR482	70 *	400n	25m	35			GeØ	DO7
4	1N760	60	100n	26m	26			GeØ	DO7
5	1N788	60	200n	26m	26			GeØ	DO7
6	1N3159	15	300n	30m	10	.50m	100A	Ge	A1
7	1N625A	20	500n	30m	35			Si	DO7
8	BAV17	25	50n	30m		30m	175J	Si#$	DO35
9	1N3068	30	50n	30m		30m	200S	Si	A398
10	HMG3068	30	50n	30m	30	1.0m		Si	F133a
11	HMG625A	30	500n	30m	35			Si	F133a
12	1N625	30	1.0u	30m	35		150A	Si	A398e
13	HMG625	30	1.0u	30m	35			Si	F133a
14	1N626A	35	500n	30m	35			Si	DO7
15	1N432B	40	3.0n	30m	35		150A	SiØ	C3e
16	BAX14	40	50n	30m	3.0	30m	200J	SiΔ	A257b
17	1N196	40	100n	30m	35		150A	SiØ	DO7
18	1N194	40	200n	30m	35		150A	SiØ	DO7
19	1N194A	40 $	200n	30m	35		150A	SiØ	A9k
20	1N195	40	300n	30m	35		150A	SiØ	DO7
21	BAX14A	40	300n	30m	3.0	30m	200J	Si#$	DO35
22	BAV100	50	50n	30m		30m	175J	Si$#	F139
23	1N659	50	300n	30m	35		150A	SiΔ	A1
24	1N659A	50	300n	30m	35		150A	SiØ	DO7
25	1N840	50	300n	30m	35		150A	Si	A1bz
26	HMG840	50	300n	30m	35			Si	F133a
27	MC840	50	300n	30m	35		175A		A2c
28	1N3121	50	500n	30m	35		60A	Ge	A1
29	26P1	50	500n	30m	35	.75m		GeØ	DO7
30	D220	50	500n	30m	30	400u	100	Si*	F122
31	HMG626A	50	500n	30m	35			Si	F133a
32	1N626	50	1.0u	30m	35		150A	Si	A398e
33	HMG626	50	1.0u	30m	35			Si	F133a
34	OA200	50 $	3.5u	30m	35	4.0m	150J	Si	DO7
35	BAV18	60	50n	30m	3.0	30m	175J	Si#$	DO35
36	HMG659	60	300n	30m	35			Si	F133a
37	MC659	60	300n	30m	35		175A		A2c
38	MC659A	60	300n	30m	35		175A		A2c
39	1N480	60	500n	30m	35		70A	GeØ	DO7
40	1N490	60	500n	30m	35		60A	GeØ	A1ft
41	1N934	60	1.0u	30m	35		200S	Si	DO7
42	1N924	60	2.0u	30m	20			Si	DO7
43	1N3069	65	50n	30m		30m	200S	Si	A398
44	HMG3069	65	50n	30m	30	1.0m		Si	F133a
45	BAW21A	70 $	300n	30m	3.0	30m	200J	Si#$	DO35
46	1N192	70 $	500n	30m	35		90A	GeØ	A1by
47	D219A	70	500n	30m	30	400u	100	Si*	F122
48	D220A	70	500n	30m	30	400u	100	Si*	F122
49	1N627A	75	500n	30m	35			Si	DO7
50	1N777	75	500n	30m	40		100S	Ge	DO7
51	1N3666	80	300n	30m	10	500u	100S	Ge	DO7
52	BAX12	90 $	50n	30m	3.0	30m	200J	SiΔ	A257a
53	BAX12A	90 $	50n	30m	3.0	30m	200J	Si#$	DO35
54	BAY84	90	60n	30m	3.0	3.0m	150J	Si#	M500d
55	1N191	90 $	500n	30m	35		90A	GeØ	A1by
56	DR401	90 *	500n	30m	35			GeØ	DO7
57	DR295	90 *	1.0u	30m	35			GeØ	DO7
58	1N460B	90	2.0u	30m	35		150A	Si	C3e
59	BAS19	100	50n	30m		30m	150J	Si#	M500d
60	BAV101	100	50n	30m		30m	175J	Si$#	F139
61	ITT2001	100	50n	30m		30m	175A	Si#$	DO35
62	BA219	100	120n	30m	3.0	30m	200J	Si	A134e
63	1N660	100	300n	30m	35		150A	SiΔ	A1
64	1N660A	100	300n	30m	35		150A	SiØ	DO7
65	1N808	100	300n	30m	35		150A	SiΔ	DO7
66	1N837A	100	300n	30m	35		150A	Si	A1bz
67	HMG837A	100	300n	30m	35			Si	F133a
68	MC837A	100	300n	30m	35		175A		A2c
69	1N837	100	500n	30m	35		150A	Si	A1bz
70	1N844	100	500n	30m	35		150A	Si	A1bz
71	D220B	100	500n	30m	30	400u	100	Si*	F122
72	HMG844	100	500n	30m	35			Si	F133a
73	MC837	100	500n	30m	35		175A		A2c
74	MC844	100	500n	30m	35		175A		A2c
75	1N627	100	1.0u	30m	35		150A	Si	A398e
76	HMG627	100	1.0u	30m	35			Si	F133a
77	BAV19	120	50n	30m	3.0	30m	175J	Si#$	DO35
78	BAY80	120 $	60n	30m		30m	175A	Si	A1ap
79	1N5609	120	300n	30m	35		200C	Si	DO35
80	MC660	120	300n	30m	35		175A		A2c
81	MC660A	120	300n	30m	35		175A		A2c
82	BAY72	125	50n	30m		30m	175J	Si#$	DO35
83	1N628A	125	500n	30m	35			Si	DO7
84	1N433B	145	3.0n	30m	35		150A	SiØ	C3e
85	1N3599	150	50n	30m		30m	175A	Si	A60d
86	BAS20	150	50n	30m		30m	150J	Si#	M500d
87	BAV102	150	50n	30m		30m	175J	Si$#	F139
88	MC1513	150	50n	30m	30	1.0m	200S	Si	TO18
89	BAX16	150	70n	30m	3.0	30m	200J	SiΔ	A134c
90	1N841	150	300n	30m	35		150A	Si	A1bz
91	BAX15	150	300n	30m	3.0	1.0m	200J	Si	A134c
92	MC841	150	300n	30m	35		175A		A2c
93	1N838	150	500n	30m	35		150A	Si	A1bz
94	MC838	150	500n	30m	35		175A		A2c
95	1N3223	150	800n	30m	35		150S	Si	DO7
96	1N628	150	1.0u	30m	35		150A	Si	A398e
97	OA202	150 $	3.5u	30m	35	4.0m	150J	Si	DO7
98	1N3485	175	50n	30m	6.0			Si	DO7
99	1N629A	175	500n	30m	35			Si	DO7
100	1N434B	180	3.0n	30m	35		150A	SiØ	C3e
101	1N3070	200	50n	30m		30m	200S	Si	A398
102	1N3071	200	50n	30m		30m	200S	Si	A398
103	1N4938	200	50n	30m		30m	200S	Si	DO35
104	1SS81	200	50n	30m		30m	175J	Si$#	DO35
105	BAS21	200	50n	30m		30m	150J	Si#	M500d
106	BAV20	200	50n	30m	3.0	30m	175J	Si#$	DO35
107	BAV23	200	50n	30m		30m	150J	Si$	M1316
108	BAV103	200	50n	30m		30m	175J	Si$#	F139
109	ITT2002	200	50n	30m		30m	175A	Si#$	DO35
110	MC002	200	50n	30m		1.0m	75A		A2c

LINE No.	5 TYPE NO.	2 PIV (V)	3 RECOVERY TIME trr (s)	TEST CONDITIONS 1 IF (A)	4 VR (V)	IR (A)	MAX. TEMP (°C)	MAT.	DRAWING NO.
111	BAX17	200	70n	30m	3.0	30m	200J	SiΔ	A134c
112	1N661	200	300n	30m	35		150A	SiΔ	A1
113	1N661A	200	300n	30m	35		150A	SiØ	DO7
114	1N809	200	300n	30m	35		150A	Si	DO7
115	1N842	200	300n	30m	35		150A	Si	A1bz
116	MC842	200	300n	30m	35		175A		A2c
117	1N839	200	500n	30m	35		150A	Si	A1bz
118	1N845	200	500n	30m	35		150A	Si	A1bz
119	MC839	200	500n	30m	35		175A		A2c
120	MC845	200	500n	30m	35		175A		A2c
121	1N629	200	1.0u	30m	35		150A	Si	A398e
122	1N817	200	1.0u	30m	35		150S	Si	DO7
123	1S84H	200	20u	30m	30		125J	SiΔ	DO7
124	MC809	220	300n	30m	35		175A		A2c
125	BAY85	240	50n	30m		30m	175J	Si#	M500d
126	MC661	240	300n	30m	35		175A		A2c
127	MC661A	240	300n	30m	35		175A		A2c
128	1SS82	250	50n	30m		30m	175J	Si$#	DO35
129	BAV21	250	50n	30m	3.0	30m	175J	Si#$	DO35
130	ITT2003	250	50n	30m		30m	175A	Si#$	DO35
131	1N843	250	300n	30m	35		150A	Si	A1bz
132	MC843	250	300n	30m	35		175A		A2c
133	1SS149H	250	5.0u	30m	10		175J	Si	DO35
134	DR694	260 *	1.0u	30m	35			Si	DO7
135	1SS83	300	50n	30m		30m	175J	Si$#	DO35
136	1SS122H	400	10u	30m	10		175J	N	DO35
137♦	ISS122	400 $	10u	30m	10		175J	Si$#	D035
138	1N4861	40	1.0u	40m	10		200S	Si	DO35
139	1N4862	70	1.0u	40m	10		200S	Si	DO35
140	1N3864	125	900n	40m	40		200S	Si	DO7
141	BA223	20		50m	20	100n	150J	Si	DO35
142	BA423	20		50m	20	100n	150J	Si	DO34
143	D20	20	70n	50m	10		60	GeØ	F122
144	D18#B	20	100n	50m	10	1.0m	70	GeØ	F122
145	KD519A	30	400nC	50m	10		85A	Si#$	A352a
146	SKE4F1/01	100	400n	50m		50m	130J	Si	M957
147	SKE4F1/02	200	400n	50m		50m	130J	Si	M957
148	SKE4G1/02	200	400n	50m		50m	130J	Si	M957
149	SKE4F1/04	400	400n	50m		50m	130J	Si	M957
150	SKE4G1/04	400	400n	50m		50m	130J	Si	M957
151	SKE4F1/06	600	400n	50m		50m	130J	Si	M957
152	SKE4G1/06	600	400n	50m		50m	130J	Si	M957
153	SKE4F1/08	800	400n	50m		50m	130J	Si	M957
154▼	SGB10UF	1.0k	60n	50m	1.0k	100m	150	Si	A333j
155	HA10	1.0k	250n	50m		100m	150A	Si	A298ad
156	HVX10	1.0k	250n	50m		100m	150	Si	A298s
157	SKE4F1/10	1.0k	400n	50m		50m	130J	Si	M957
158	SK3M3/13	1.3k	6.0u	50m		50m	130J	Si	A277m
159▼	SGB15UF	1.5k	60n	50m	1.5k	100m	150	Si	A333j
160▼	SHM15UF	1.5k	60n	50m	1.5k	100m	175	Si	A313n
161	X15UFG	1.5k	100n	50m		100m	175	Si	A94ad
162♦	SHM15F	1.5k	150n	50m	1.5k	100m	175	Si	A313n
163	X15FG	1.5k	200n	50m		100m	175	Si	A94ad
164	F15	1.5k	250n	50m		100m	200J	Si	A294i
165	HA15	1.5k	250n	50m		100m	150A	Si	A298ad
166	HVX15	1.5k	250n	50m		100m	150	Si	A298s
167	MC5610	1.5k	300n	50m		100m	100	Si	A60w
168	MC5613	1.5k	300n	50m		100m	100	Si	A60w
169	S15F	1.5k	300n	50m		100m	175A	Si	A248m
170	X15SG	1.5k	3.0u	50m		100m	175	Si	A94ad
171▼	SHM15	1.5k	5.0u	50m	1.5k	100m	175	Si	A313n
172	SK3M3/15	1.5k	6.0u	50m		50m	130J	Si	A277m
173▼	SGB20UF	2.0k	60n	50m	2.0k	100m	150	Si	A333j
174▼	SHM20UF	2.0k	60n	50m	2.0k	100m	175	Si	A313n
175	X20UFG	2.0k	100n	50m		100m	175	Si	A94ad
176♦	SHM20F	2.0k	150n	50m	2.0k	100m	175	Si	A313n
177	X20FG	2.0k	200n	50m		100m	175	Si	A94ad
178	F20	2.0k	250n	50m		100m	200J	Si	A294i
179	HA20	2.0k	250n	50m		100m	150A	Si	A298ad
180	HVX20	2.0k	250n	50m		100m	150	Si	A298s
181	MC5611	2.0k	300n	50m		100m	100	Si	A60w
182	MC5614	2.0k	300n	50m		100m	100	Si	A60w
183	M20	2.0k	2.0u	50m		100m	200J	Si	A294j
184	X20SG	2.0k	3.0u	50m		100m	175	Si	A94ad
185▼	SHM20	2.0k	5.0u	50m	2.0k	100m	175	Si	A313n
186▼	SGB25UF	2.5k	60n	50m	2.5k	100m	150	Si	A333j
187▼	SHM25UF	2.5k	60n	50m	2.5k	100m	175	Si	A313n
188	X25UFG	2.5k	100n	50m		100m	175	Si	A94ad
189♦	SHM25F	2.5k	150n	50m	2.5k	100m	175	Si	A313n
190	X25FG	2.5k	200n	50m		100m	175	Si	A94ad
191	F25	2.5k	250n	50m		100m	200J	Si	A294i
192	HA25	2.5k	250n	50m		100m	150A	Si	A298ad
193	HVX25	2.5k	250n	50m		100m	150	Si	A298s
194	MC5612	2.5k	300n	50m		100m	100	Si	A60w
195	MC5615	2.5k	300n	50m		100m	100	Si	A60w
196	S25F	2.5k	300n	50m		100m	175A	Si	A248m
197	X25SG	2.5k	3.0u	50m		100m	175	Si	A94ad
198▼	SHM25	2.5k	5.0u	50m	2.5k	100m	175	Si	A313n
199▼	SGB30UF	3.0k	60n	50m	3.0k	100m	150	Si	A333j
200▼	SHM30UF	3.0k	60n	50m	3.0k	100m	175	Si	A313n
201	X30UFG	3.0k	100n	50m		100m	175	Si	A94ad
202♦	SHM30F	3.0k	150n	50m	3.0k	100m	175	Si	A313n
203	X30FG	3.0k	200n	50m		100m	175	Si	A94ad
204	F30	3.0k	250n	50m		100m	200J	Si	A294i
205	HA30	3.0k	250n	50m		100m	150A	Si	A298ad
206	HVX30(M)	3.0k	250n	50m		100m	150		A1fk
207	MC5616	3.0k	300n	50m		100m	100	Si	A60w
208	X30SG	3.0k	3.0u	50m		100m	175	Si	A94ad
209▼	SHM30	3.0k	5.0u	50m	3.0k	100m	175	Si	A313n
210▼	SGB35UF	3.5k	60n	50m	3.5k	100m	150	Si	A333j
211▼	SHM40UF	4.0k	60n	50m	4.0k	100m	175	Si	A313n
212	X40UFG	4.0k	100n	50m		100m	175	Si	A94ad
213♦	SHM40F	4.0k	150n	50m	4.0k	100m	175	Si	A313n
214	X40FG	4.0k	200n	50m		100m	175	Si	A94ad
215	HA40	4.0k	250n	50m		100m	150A	Si	A298ad
216	HVX40	4.0k	250n	50m		100m	150	Si	A298s
217	F40A	4.0k	300n	50m		100m	200J	Si	A294i
218	MC5617	4.0k	300n	50m		100m	100	Si	A60w
219	X40SG	4.0k	3.0u	50m		100m	175	Si	A94ad
220▼	SHM40	4.0k	5.0u	50m	4.0k	100m	175	Si	A313n

SYMBOLS AND CODES EXPLAINED IN INTERPRETER

4. HIGH-SPEED DIODES - Fast Recovery/Switching (Cont'd)

IN ORDER OF: (1) IF TEST (2) PIV (3) trr & (4) & VF & (5) TYPE NUMBER

LINE No.	5 TYPE NO.	2 PIV (V)	RECOVERY TIME 3 trr (s)	TEST CONDITIONS 1 IF (A)	4 VR (V)	IR (A)	MAX. TEMP (°C)	MAT.	DRAWING NO.
1▼	SHM50UF	5.0k	60n	50m	5.0k	100m	175	Si	A313n
2	X50UFG	5.0k	100n	50m		100m	175	Si	A94ad
3♦	SHM50F	5.0k	150n	50m	5.0k	100m	175	Si	A313n
4	X50FG	5.0k	200n	50m		100m	175	Si	A94ad
5	HA50#B	5.0k	250n	50m		100m	150A	Si	A298ad
6	HVX50	5.0k	250n	50m		100m	150	Si	A298s
7	SHVM5F	5.0k	250n	50m		100m	150S	Si	S416
8	F50A	5.0k	300n	50m		100m	200J	Si	A294i
9	X50SG	5.0k	3.0u	50m		100m	175	Si	A94ad
10	M50A	5.0k	5.0u	50m		100m	200J	Si	A294j
11▼	SHM50	5.0k	5.0u	50m	5.0k	100m	175	Si	A313n
12▼	SHM60UF	6.0k	60n	50m	6.0k	100m	175	Si	A313n
13	X60UFG	6.0k	100n	50m		100m	175	Si	A94ad
14▼	SHM60F	6.0k	150n	50m	6.0k	100m	175	Si	A313n
15	X60FG	6.0k	200n	50m		100m	175	Si	A94ad
16	F60A	6.0k	300n	50m		100m	200J	Si	A294i
17	MC5618	6.0k	300n	50m		100m	100	Si	A60w
18	HS60	6.0k	2.0u	50m		100m	175A	Si	A298ad
19	X60SG	6.0k	3.0u	50m		100m	175	Si	A94ad
20▼	SHM60	6.0k	5.0u	50m	6.0k	100m	175	Si	A313n
21	HA75	7.5k	250n	50m		100m	150A	Si	A298ad
22	HVX75	7.5k	250n	50m		100m	150	Si	A298s
23▼	SHM80UF	8.0k	60n	50m	8.0k	100m	175	Si	A313n
24	X80UFG	8.0k	100n	50m		100m	175	Si	A94ad
25▼	SHM80F	8.0k	150n	50m	8.0k	100m	175	Si	A313n
26	X80FG	8.0k	200n	50m		100m	175	Si	A94ad
27	MC5619	8.0k	300n	50m		100m	100	Si	A60w
28	X80SG	8.0k	3.0u	50m		100m	175	Si	A94ad
29▼	SHM80	8.0k	5.0u	50m	8.0k	100m	175	Si	A313n
30▼	SHM100UF	10k	60n	50m	10k	100m	175	Si	A313n
31	X100UFG	10k	100n	50m		100m	175	Si	A94ad
32▼	SHM100F	10k	150n	50m	10k	100m	175	Si	A313n
33	X100FG	10k	200n	50m		100m	175	Si	A94ad
34	HA100#B	10k	250n	50m		100m	150A	Si	A298ad
35	HVX100	10k	250n	50m		100m	150	Si	A298s
36	SHVM10F	10k	250n	.05		.10	150S	Si	S416
37	X100SG	10k	3.0u	50m		100m	175	Si	A94ad
38▼	SHM100	10k	5.0u	50m	10k	100m	175	Si	A313n
39	X120UFG	12k	100n	50m		100m	175	Si	A94ad
40	X120FG	12k	200n	50m		100m	175	Si	A94ad
41	X120SG	12k	3.0u	50m		100m	175	Si	A94ad
42	X150UFG	15k	100n	50m		100m	175	Si	A94ad
43	HVJX15K	15k	200n	50m		100m	150A	Si	A298ae
44	X150FG	15k	200n	50m		100m	175	Si	A94ad
45	SHVM15F	15k	250n	.05		.10	150S	Si	S416
46	X150SG	15k	3.0u	50m		100m	175	Si	A94ad
47	HVJX20K	20k	200n	50m		100m	150A	Si	A298af
48	HVJX22.5K	22k	200n	50m		100m	150A	Si	A298af
49	HVJX25K	25k	200n	50m		100m	150A	Si	A298ag
50	HVJX30K	30k	200n	50m		100m	150A	Si	A298ag
51	HVJX35K	35k	200n	50m		100m	150A	Si	A298ah
52	HVJX37.5K	37k	200n	50m		100m	150A	Si	A298ah
53	HVJX40K	40k	200n	50m		100m	150A	Si	A298aj
54	HVJX45K	45k	200n	50m		100m	150A	Si	A298aj
55	1A1/52	10	3.0n	100m		10m	175A	Si▼	TO46
56	1A2/52	10	3.0n	100m		10m	175A	Si	TO46
57	1A5/52	10	3.0n	100m		10m	175A	Si▼	TO46
58	1B1/52	10	3.0n	100m		10m	175A	Si▼	TO46
59	1B2/52	10	3.0n	100m		10m	175A	Si▼	TO46
60	1B5/52	10	3.0n	100m		10m	175A	Si▼	TO46
61	1N571	15	4.0u	100m	5.0		75A	Ge	A9k
62♦	BA244	20	200n	100m	15	100n	150J	Si	DO35
63	1N2801	20	500n	100m		100m	100S	Ge	A182
64	2A1/52	25	3.0n	100m		10m	175A	Si▼	TO46
65	2A2/52	25	3.0n	100m		10m	175A	Si▼	TO46
66	2A5/52	25	3.0n	100m		10m	175A	Si▼	TO46
67	2A12/52	25	3.0n	100m		10m	175J	Si▼	TO46
68	2A13/52	25	3.0n	100m		10m	175J	Si▼	TO46
69	2A14/52	25	3.0n	100m		10m	175J	Si▼	TO46
70	2A15/52	25	3.0n	100m		10m	175J	Si▼	TO46
71	2A16/52	25	3.0n	100m		10m	175J	Si▼	TO46
72	2B1/52	25	3.0n	100m		10m	175A	Si▼	TO46
73	2B2/52	25	3.0n	100m		10m	175A	Si▼	TO46
74	2B5/52	25	3.0n	100m		10m	175A	Si▼	TO46
75	2C1/52	25	9.0n	100m		10m	175A	Si▼	TO46
76	2C2/52	25	9.0n	100m		10m	175A	Si▼	TO46
77	2C05/52	25	9.0n	100m		10m	175A	Si▼	TO46
78	BAW24	40	6.0n	100m		100m	200J	Si$	DO35
79	BAW25	40	6.0n	100m		100m	200J	Si$	DO35
80♦	SS1.5J4	40	30	100m		100m	125J	Si	A437
81♦	SS2J4	40	40	100m		100m	125J	Si	A437a
82♦	SS3J4	40	50	100m		100m	175J	Si	A4376
83	5A1/52	50	3.0n	100m		10m	175A	Si▼	TO46
84	5A2/52	50	3.0n	100m		10m	175A	Si▼	TO46
85	5A5/52	50	3.0n	100m		10m	175A	Si▼	TO46
86	5B1/52	50	3.0n	100m		10m	175A	Si▼	TO46
87	5B2/52	50	3.0n	100m		10m	175A	Si▼	TO46
88	5B5/52	50	3.0n	100m		10m	175A	Si▼	TO46
89	5C1/52	50	9.0n	100m		10m	175A	Si▼	TO46
90	5C2/52	50	9.0n	100m		10m	175A	Si▼	TO46
91	BYX92-50	50	100n	100m		100m	150J	Si	DO13
92	12MF5	50	200n	100m		100m	150J	Si	S4n
93	30MF5	50	200n	100m		100m	150J	Si	S4O
94	BYX58-50	50	250n	100m		100m	150J	Si	DO13
95♦	FR501	50	250n	100m		100m	150A	Si△	Alaba
96	BAW26	60	6.0n	100m		100m	200J	Si$	DO35
97	BAW27	60	6.0n	100m		100m	200J	Si$	DO35
98	1SS84	70	50n	100m		100m	175		DO35
99	7A1/52	75	3.0n	100m		10m	175A	Si▼	TO46
100	7A2/52	75	3.0n	100m		10m	175A	Si▼	TO46
101	7A5/52	75	3.0n	100m		10m	175A	Si▼	TO46
102	7B1/52	75	3.0n	100m		10m	175A	Si▼	TO46
103	7B2/52	75	3.0n	100m		10m	175A	Si▼	TO46
104	7B5/52	75	3.0n	100m		10m	175A	Si▼	TO46
105	7C1/52	75	9.0n	100m		10m	175A	Si▼	TO46
106	7C2/52	75	9.0n	100m		10m	175A	Si▼	TO46
107	7C05/52	75	9.0n	100m		10m	175A	Si▼	TO46
108	BY291-75	75	150n	100m			150J	Si	M850
109	BY292-75	75	150n	100m			150J	Si	M850
110	BY293-75	75	150n	100m			150J	Si	M882

LINE No.	5 TYPE NO.	2 PIV (V)	RECOVERY TIME 3 trr (s)	TEST CONDITIONS 1 IF (A)	4 VR (V)	IR (A)	MAX. TEMP (°C)	MAT.	DRAWING NO.
111	BY294-75	75	150n	100m			150J	Si	M882
112	PD9049	80	30n	100m		100m	200	Si	A1x
113	10A1/52	100	3.0n	100m		10m	175A	Si▼	TO46
114	10A2/52	100	3.0n	100m		10m	175A	Si▼	TO46
115	10A5/52	100	3.0n	100m		10m	175A	Si▼	TO46
116	10B1/52	100	3.0n	100m		10m	175A	Si▼	TO46
117	10B2/52	100	3.0n	100m		10m	175A	Si▼	TO46
118	10B5/52	100	3.0n	100m		10m	175A	Si▼	TO46
119	LL4148	100	4.0n	100m	6.0	1.0m	200J	Si	F135
120	10C2/52	100	9.0n	100m		10m	175A	Si▼	TO46
121	10C05/52	100	9.0n	100m		10m	175A	Si▼	TO46
122	BYX92-100	100	100n	100m		100m	150J	Si	DO13
123	12MF10	100	200n	100m		100m	150J	Si	S4n
124	30MF10	100	200n	100m		100m	150J	Si	S4O
125	BYW16-100	100	200n	100m		100m		Si	A318
126	BYX58-100	100	250n	100m		100m	150J	Si	DO13
127	BYW15-100	100	500n	100m		100m		Si	A318
128	BYW14-100	100	750n	100m		100m		Si	A318
129	DR301	100	1.0u	100m		100u	125	Si△	DO14
130	1N697	120	100n	100m		100m	150A	Si△	A87
131	BY291-150	150	150n	100m			150J	Si	M850
132	BY292-150	150	150n	100m			150J	Si	M850
133	BY293-150	150	150n	100m			150J	Si	M882
134	BY294-150	150	150n	100m			150J	Si	M882
135	BY295-150	150	150n	100m			150J	Si	DO15
136	12MF15	150	200n	100m		100m	150J	Si	S4n
137	30MF15	150	200n	100m		100m	150J	Si	S4O
138	BY289-150	150	300n	100m			100J	Si	M850
139	SM-1A-02FR	200	.04u	100m		100m	110J	Si	A437
140	BYX92-200	200	100n	100m		100m	150J	Si	DO13
141	ERC33-02	200	100n	100m		100m	125J	Si	A21b
142	ERD33-02	200	100n	100m		100m	150J	Si	A344ae
143	ESAC33-02C	200	100n	100m		100m	150J		TO220
144	BY295-200	200	150n	100m			150J	Si	DO15
145	12MF20	200	200n	100m		100m	150J	Si	S4n
146	30MF20	200	200n	100m		100m	150J	Si	S4O
147	BYW16-200	200	200n	100m		100m		Si	A318
148	BYX58-200	200	250n	100m		100m	150J	Si	DO13
149	BY289-200	200	300n	100m			100J	Si	M850
150♦	S2K20	200	300n	100m		300m	150S		A395b
151♦	S5KC20	200	300n	100m		300m	150S		M1048Ø
152	ERB43-02	200	400n	100m		100m	140J	Si	A387
153	ERC47-02	200	400n	100m		100m	140J	Si	A21b
154	ERD29-02	200	400n	100m		100m	125J	Si	A430
155	SM1-02FR	200	400n	100m		100m	110J	Si	A298a
156	SM1A02FR	200	400n	100m		100m	110J	Si	A437
157	SM1.5-02FR	200	400n	100m		100m	110J	Si	A277d
158	SM3-02FR	200	400n	100m		100m	150J	Si	A437b
159	SM-3-02FR	200	400n	100m		100m	150J	Si	A437b
160	BYW15-200	200	500n	100m		100m		Si	A318
161	ERC46-02	200	500n	100m		100m	140J	Si	A313I
162	ESAC25C/N02	200	500n	100m		100m	140J		TO220
163	BYW14-200	200	750n	100m		100m		Si	A318
164	BY291-225	225	150n	100m			150J	Si	M850
165	BY292-225	225	150n	100m			150J	Si	M850
166	BY293-225	225	150n	100m			150J	Si	M882
167	BY294-225	225	150n	100m			150J	Si	M882
168	BYX92-300	300	100n	100m		100m	150J	Si	DO13
169	BY291-300	300	150n	100m			150J	Si	M850
170	BY292-300	300	150n	100m			150J	Si	M850
171	BY293-300	300	150n	100m			150J	Si	M882
172	BY294-300	300	150n	100m			150J	Si	M882
173	BY295-300	300	150n	100m			150J	Si	DO15
174	BYX58-300	300	250n	100m		100m	150J	Si	DO13
175	BY289-300	300	300n	100m			100J	Si	M850
176	DR300	300	1.0u	100m		100u	125	Si△	DO14
177	BYX92-400	400	100n	100m		100m	150J	Si	DO13
178	BY295-400	400	150n	100m			150J	Si	DO15
179	BYW16-400	400	200n	100m		100m		Si	A318
180	BYX58-400	400	250n	100m		100m	150J	Si	DO13
181	BY289-400	400	300n	100m			100J	Si	M850
182	ERB28-04	400	400n	100m		100m	125J	Si	A21b
183	ERB43-04	400	400n	100m		100m	140J	Si	A387
184	ERC24-04	400	400n	100m		100m	125J	Si	A21b
185	ERC25-04	400	400n	100m		100m	125J	Si	A21b
186	ERC47-04	400	400n	100m		100m	140J	Si	A21b
187	ERD28-04	400	400n	100m		100m	125J	Si	A424
188	ERD29-04	400	400n	100m		100m	125J	Si	A430
189	SM1-04FR	400	400n	100m		100m	110J	Si	A298a
190	SM1A04FR	400	400n	100m		100m	110J	Si	A437
191	SM1.5-04FR	400	400n	100m		100m	110GJ	Si	A277d
192	SM3-04FR	400	400n	100m		100m	150J	Si	A437b
193	SM-1A-04FR	400	0.4u	100m		100m	110J	Si	A437
194	SM-3-04FR	400	400n	100m		100m	150J	Si	A437b
195	BYW15-400	400	500n	100m		100m		Si	A318
196	ERC46-04	400	500n	100m		100m	140J	Si	A313I
197	ESAC25C/N04	400	500n	100m		100m	140J		TO220
198	ERB24-04C	400	700n	100m		100m	125J	Si	A21b
199	BYW14-400	400	750n	100m		100m		Si	A318
200	ERB24-04D	400	1.0u	100m		100m	125J	Si	A21b
201	ERB28-04D	400	1.0u	100m		100m	125J	Si	A21b
202	BY291-450	450	150n	100m			150J	Si	M850
203	BY294-450	450	150n	100m			150J	Si	M882
204	BY295-450	450	150n	100m			150J	Si	DO15
205	BY289-450	450	300n	100m			100J	Si	M850
206	BY300-500	500	150n	100m			150J	Si	C186
207	BY291-600	600	150n	100m			150J	Si	M850
208	BY294-600	600	150n	100m			150J	Si	M882
209	BY295-600	600	150n	100m			150J	Si	DO15
210	BY300-600	600	150n	100m			150J	Si	C186
211	BYW16-600	600	200n	100m		100m		Si	A318
212	BY289-600	600	300n	100m			100J	Si	M850
213	ERB28-06	600	400n	100m		100m	125J	Si	A21b
214	ERC24-06	600	400n	100m		100m	125J	Si	A21b
215	ERC25-06	600	400n	100m		100m	125J	Si	A21b
216	ERD28-06	600	400n	100m		100m	125J	Si	A424
217	ERD29-06	600	400n	100m		100m	125J	Si	A430
218	SM1A06FR	600	400n	100m		100m	110J	Si	A437
219	SM3-06FR	600	400n	100m		100m	150J	Si	A437b
220	SM-1A-06FR	600	400n	100m		100m	110J	Si	A437

SYMBOLS AND CODES EXPLAINED IN INTERPRETER

4. HIGH-SPEED DIODES - Fast Recovery/Switching (Cont'd)

IN ORDER OF: (1) IF TEST (2) PIV (3) trr & (4) & VF & (5) TYPE NUMBER

LINE No.	5 TYPE NO.	2 PIV (V)	RECOVERY TIME 3 trr (s)	TEST CONDITIONS 1 IF (A)	4 VR (V)	IR (A)	MAX. TEMP (°C)	MAT.	DRAWING NO.
1	SM-3-06FR	600	400n	100m		100m	150J	Si	A437b
2	BYW15-600	600	500n	100m		100m		Si	A318
3	ERB24-06C	600	700n	100m		100m	125J	Si	A21b
4	BYW14-600	600	750n	100m		100m		Si	A318
5	ERB24-06D	600	1.0u	100m		100m	125J	Si	A21b
6	ERB28-06D	600	1.0u	100m		100m	125J	Si	A21b
7	BY300-650	650	150n	100m			150J	Si	C186
8	BY300-700	700	150n	100m			150J	Si	C186
9	BYW16-800	800	200n	100m		100m		Si	A318
10	SM1A08FR	800	400n	100m		100m	110J	Si	A437
11	SM-1A-08FR	800	400n	100m		100m	110J	Si	A437
12	BYW15-800	800	500n	100m		100m		Si	A318
13	BYW14-800	800	750n	100m		100m		Si	A318
14	SM1-08FR	800	800n	100m		100m	110J	Si	A298a
15	SM1.5-08FR	800	800n	100m		100m	110J	Si	A277d
16	BY289-900	900	300n	100m			100J	Si	M850
17	BY289-1000	1.0k	300n	100m			100J	Si	M850
18	SM1A10FR	1.0k	400n	100m		100m	110J	Si	A437
19	SM-1A-10FR	1.0k	400n	100m		100m	110J	Si	A437
20	SM1-10FR	1.0k	800n	100m		100m	110J	Si	A298a
21	SM1.5-10FR	1.0k	800n	100m		100m	110J	Si	A277d
22	SM1A12FR	1.2k	400n	100m		100m	110J	Si	A437
23	SM-1A-12FR	1.2k	400n	100m		100m	110J	Si	A437
24	ERC26-13	1.3k	4.0u	100m		100m	140J	Si	A313l
25	ERC27-13	1.3k	4.0u	100m		100m	140J	Si	A313l
26	ERB30-13	1.3k	5.0u	100m		100m	140J	Si	A313l
27	BY584	1.5k	200n	100m	100		120J	Si	A109k
28	ERC26-15	1.5k	4.0u	100m		100m	140J	Si	A313l
29	ERC27-15	1.5k	4.0u	100m		100m	140J	Si	A313l
30	ERB30-15	1.5k	5.0u	100m		100m	140J	Si	A313l
31	SM05A16FR	1.6k	400n	100m		100m	110J	Si	A437
32	SM-05A-16FR	1.6k	400n	100m		100m	110J	Si	A437
33	SM05-16FR	1.6k	1.5u	100m		100m	125J	Si	A298a
34	BY505	2.0k	200n	100m	100		120J	Si	A109k
35	MU2	2.0k	200n	100m		100m	125A	Si△	A83v
36	ERB26-20	2.0k	4.0u	100m		100m	125J	Si	A313l
37	HVF2500	2.5k	150n	100m		200m	150	Si	A138c
38	MU3	3.0k	200n	100m		100m	125A	Si△	A83v
39	MU4	4.0k	200n	100m		100m	125A	Si△	A83v
40	HVF5000	5.0k	150n	100m		200m	150	Si	A138g
41	HV50F	5.0k	200n	100m		200m	100A	Si*△	A1ty
42	MU5	5.0k	200n	100m		100m	125A	Si△	A83v
43	HV60F	6.0k	200n	100m		200m	100A	Si*△	A1ty
44	MU6	6.0k	200n	100m		100m	125A	Si△	A83v
45	HVF7500	7.5k	150n	100m		200m	150	Si	A138m
46	MU8	8.0k	200n	100m		100m	125J	Si	A83bn
47	RTD08	8.0k	200n	100m		200m	125A	Si	A1jv
48	ED8H1	8.0k	500n	100m		100m	125J	Si	A83cw
49	BY707	9.0k	200n	100m	100		120J	Si	A109m
50	HVF10000	10k	150n	100m		200m	150	Si	A138q
51	MU10	10k	200n	100m		100m	125A	Si△	A83v
52	RTD10	10k	200n	100m		200m	125A	Si	A1jv
53	HVHF10000	10k	1.0u	100m		200m	175A	Si	A138g
54	BY609	11.5k	200n	100m	100		120J	Si	A109l
55	BY610	11.5k	200n	100m	100		120J	Si	A109l
56	BY708	12k	200n	100m			120J	Si	A109m
57	RTD12	12k	200n	100m		200m	125A	Si	A1mc
58	EV12R	12k	1.5u	100m		100m	25C	Si	
59	HVF12500	12.5k	150n	100m		200m	150	Si	A138s
60	BY709	14k	200n	100m	100		120J	Si	A109m
61	RTD14	14k	200n	100m		200m	125A	Si	A1mc
62	HVF15000	15k	150n	100m		200m	150	Si	A138s
63	EW15R	15k	1.5u	100m		100m	25C	Si	
64	RTD16	16k	200n	100m		200m	125A	Si	A1mc
65	ED16H1	16k	500n	100m		100m	125J	Si	A83cx
66	BY710	17k	200n	100m	100		120J	Si	A109n
67	RTD18	18k	200n	100m		200m	125A	Si	A1nc
68	BY711	19k	200n	100m	100		120J	Si	A109n
69	HVF20000	20k	150n	100m		200m	150	Si	A138s
70	MU20	20k	200n	100m		100m			A83bu
71	RTD20	20k	200n	100m		200m	125A	Si	A1nc
72	HVH20000	20k	2.0u	100m		200m	150	Si	A138g
73	ED24H1	24k	500n	100m		100m	125J	Si	A83cy
74	HVF25000	25k	150n	100m		200m	150	Si	A138s
75	RTD25	25k	200n	100m		200m	125A	Si	A1pa
76	BY714	30k	200n	100m	100		120J	Si	A109o
77	RTD30	30k	200n	100m		200m	125A	Si	A1pt
78	EDH36-1	36k	500n	100m		100m	125J	Si	F108
79	EDH36-2	36k	500n	100m		100m	125J	Si	F108
80	EDH36-3	36k	500n	100m		100m	125J	Si	F108
81	RTD40	40k	200n	100m		200m	125A	Si	A1qv
82	RTD50	50k	200n	100m		200m	125A	Si	A1rm
83	RK300A	3.0k	200n	150m			150A	Si	A3c
84	RK300B	3.0k	250n	150m			150A	Si	A3c
85	RK400A	4.0k	200n	.15		.30	150J	Si	A3c
86	RK400B	4.0k	250n	.15		.30	150J	Si	A3c
87	RK500A	5.0k	200n	150m			150A	Si	A3c
88	RK500B	5.0k	250n	150m			150A	Si	A3c
89	RK600A	6.0k	200n	150m			150A	Si	A3c
90	RK600B	6.0k	250n	150m			150A	Si	A3c
91	FDH666	40	6.0n	200m		200m	175J	Si#$	A1ap
92	BAY41	40	15n	200m		200m		Si$	A171f
93	1N3600	50	4.0n	200m		200m	150A	Si	A398
94	BAY74	50	4.0n	200m		200m	175J	Si#$	DO35
95	HMG3600	50	4.0n	200m		200m		Si	F133a
96	HMG3954	50	4.0n	200m		200m		Si	F133a
97	HMG4150	50	4.0n	200m		200m		Si	F133a
98	HMG4322	50	4.0n	200m		200m		Si	F133a
99	1N4150	50	6.0n	200m		200m	200A	Si	DO35
100	BAY42	60	15n	200m		200m	175J	Si#	DO7
101	1S951	70	25n	200m		200m	150S	Si$#	A9a
102	FD600	75	4.0n	200m		200m	150A	Si$#	DO7
103	1S2095A	75	6.0n	200m		200m	175J	Si$#	DO35
104	BAW55	75	6.0n	.20		.20	150J	Si#$	DO7
105	FDH600	75	6.0n	200m		200m	175J	Si$#	A1ap
106	TID31	75	6.0n	200m		200m	150A	Si$#	A1aq
107	TID37	75	6.0n	200m		200m	150A	Si$#	A1aq
108	TID33	75	10n	200m		200m	150A	Si$#	A1aq
109	TID35	75	10n	200m		200m	150A	Si$#	A1aq
110	BAY43	80	15n	200m		200m		Si$	A171f
111	HMG3872	90	50n	200m	20	5.0m		Si	F133a
112	TID32	100	10n	200m		200m	150A	Si$#	A1aq
113	TID34	100	10n	200m		200m	150A	Si$#	A1aq
114	TID36	100	10n	200m		200m	150A	Si$#	A1aq
115	S6K20	200	300n	200m		600m	150J		M981a
116	BY409A	12k	400n	200m	100		100J	Si	A69z
117	BY209	12k	1.0u	200m	100		85J	Si	A1xt
118	BY476	18k	400n	200m	100		100J	Si	A69m
119	BY476A	18k	400n	200m	100		100J	Si	A398b
120	HV21F	2.0k	200n	250m		500m	100A	Si*△	A1ty
121	HV30F	3.0k	200n	250m		500m	100A	Si*△	A1ty
122	HV40F	4.0k	200n	250m		500m	100A	Si*△	A1ty
123	HV206F	6.0k	250n	250m		500m			A83cu
124	HV208F	8.0k	250n	250m		500m			A83cs
125	HV210F	10k	250n	250m		500m			A83cv
126	HV212F	12k	250n	250m		500m			A83ct
127	HV215F	15k	250n	250m		500m			A83ct
128	1N3122	20	3.5u	300m	20		75S	Ge	DO7
129	1N3669	70	200n	300m	10	200m	200J	Si	DO7
130	1N4086	70	200n	300m	10		200S	Si	DO7
131	HMG3669	70	200n	300m	10	200m		Si	F133a
132	HMG4086	70	200n	300m	10	5.0m		Si	F133a
133	1N4456	35	1.5n	400m		400m	175A	Si	DO7
134	1N4457	50	1.5n	400m		400m	175A	Si	DO7
135	BAV10	60	6.0n	400m	40	400m	200J	Si#$	DO35
136	12CH1M	100	350n	.40		.80	150J		M1144
137	12CH2M	200	350n	.40		.80	150J		M1144
138	12CH3M	300	350n	.40		.80	150J		M1144
139	BAS11	300	1.0u	400m	50		150J	Si	DO35
140	BY206	300	1.0u	400m	50		150J	Si△	DO14
141	12CH4M	400	350n	.40		.80	150J		M1144
142	BY207	500	1.0u	400m	50		150J	Si△	DO14
143	BY208-600	600	350n	400m	50		125J	Si	A1ws
144♦	PY208-800	600	350n	400m	50		50A	Si	A1bg
145	BY208-800	800	350n	400m	50		125J	Si	A1ws
146♦	PY208-1000	800	350n	400m	50		50A	Si	A1bg
147	BY208-1000	1.0k	350n	400m	50		125J	Si	A1ws
148	HVFS2500	2.5k	150n	400m		800m	150A	Si	A138w
149	HVFS5000	5.0k	150n	400m		800m	150A	Si	A138x
150	HVFS7500	7.5k	150n	400m		800m	150A	Si	A138y
151	HVFS10000	10k	150n	400m		800m	150A	Si	A138z
152	HVFS12500	12.5k	150n	400m		800m	150A	Si	A138u
153	HVFS15000	15k	150n	400m		800m	150A	Si	A138v
154	HVFS17500	17.5k	150n	400m		800m	150A	Si	A138v
155	HVFS20000	20k	150n	400m		800m	150A	Si	A138v
156	1N3597	300n	300n	500m	50		175A	Si	DO7
157	1E.5	10	6.0n	500m		500m	150J		TO92
158	TSV	15	150n	500m		1.0	175A	Si	
159▼	1N5170	15	5.0u	500m	15	1.0	175A	Si	DO27
160♦	SPD5817	20	5.0n	500m	20	1.0	125J		DO41
161	2E.5	20	6.0n	500m		500m	150J		TO92
162	2R0/18	20	6.0n	.50			175J	Si▼	TO18
163	2R1/18	20	10n	.50			175J	Si▼	TO18
164	2R2B	20	10n	500m		1.0	175A	Si▼	TO66
165	2R2S	20	10n	500m		1.0	175J	Si▼	DO4
166	2R3B	20	20n	500m		1.0	175J	Si▼	TO66
167	2R3S	20	20n	500m		1.0	175J	Si▼	DO4
168	2R4C	20	25n	500m		1.0	175J	Si▼	TO3
169	2R4S	20	25n	500m		1.0	175J	Si▼	DO4
170	2R5C	20	35n	500m		1.0	175J	Si▼	TO3
171	2R5S	20	35n	500m		1.0	175J	Si▼	DO5
172	2R6C	20	50n	500m		1.0	175J	Si▼	TO3
173	2R6S	20	50n	500m		1.0	175J	Si▼	DO5
174	2R7CD	20	50n	500m		1.0	175J	Si▼	TO3
175	2R8CD	20	75n	500m		1.0	175J	Si▼	TO3
176	2R8S	20	75n	500m		1.0	175J	Si▼	DO5
177♦	SPD5818	30	5.0n	500m	30	1.0	125J		DO41
178	3E.5	30	6.0n	500m		500m	150J		TO92
179	3R0/18	30	6.0n	.50			175J	Si▼	TO18
180	3R1/18	30	10n	.50			175J	Si▼	TO18
181	3R2B	30	10n	500m		1.0	175A	Si▼	TO66
182	3R2S	30	10n	500m		1.0	175J	Si▼	DO4
183	3R3B	30	20n	500m		1.0	175J	Si▼	TO66
184	3R3S	30	20n	500m		1.0	175J	Si▼	DO4
185	3R4C	30	25n	500m		1.0	175J	Si▼	TO3
186	3R4S	30	25n	500m		1.0	175J	Si▼	DO4
187	3R5C	30	35n	500m		1.0	175J	Si▼	TO3
188	3R5S	30	35n	500m		1.0	175J	Si▼	DO5
189	3R6C	30	50n	500m		1.0	175J	Si▼	TO3
190	3R6S	30	50n	500m		1.0	175J	Si▼	DO5
191	3R7CD	30	50n	500m		1.0	175J	Si▼	TO3
192	SER6097	30	50n	.50			175J		DO5
193	3R8CD	30	75n	500m		1.0	175J	Si▼	TO3
194	3R8S	30	75n	500m		1.0	175J	Si▼	DO5
195	1N5835	30	100n	500m		1.0	200A	Si	A294
196	TS3	30	150n	500m		1.0	175A	Si	
197	1N920	36	300n	500m	30		175J	Si	DO7
198	1N690	36	800n	500m	30		175J	Si	DO7
199♦	SPD5819	40	5.0n	500m	40	1.0	125J		DO41
200	4R0/18	40	6.0n	.50			175J	Si▼	TO18
201	4R1/18	40	10n	.50			175J	Si▼	TO18
202	4R2B	40	10n	500m		1.0	175A	Si▼	TO66
203	4R2S	40	10n	500m		1.0	175J	Si▼	DO4
204	1N4452	40	20n	500m		500m	200S	Si	DO35
205	4R3B	40	20n	500m		1.0	175J	Si▼	TO66
206	4R3S	40	20n	500m		1.0	175J	Si▼	DO4
207	4R4C	40	25n	500m		1.0	175J	Si▼	TO3
208	4R4S	40	25n	500m		1.0	175J	Si▼	DO4
209	4R5C	40	35n	500m		1.0	175J	Si▼	TO3
210	4R5S	40	35n	500m		1.0	175J	Si▼	DO5
211	4R6C	40	50n	500m		1.0	175J	Si▼	TO3
212	4R6S	40	50n	500m		1.0	175J	Si▼	DO5
213	4R7CD	40	50n	500m		1.0	175J	Si▼	TO3
214	SER6098	40	50n	.50			175J		DO5
215	4R8CD	40	75n	500m		1.0	175J	Si▼	TO3
216	4R8S	40	75n	500m		1.0	175J	Si▼	DO5
217	1N3298	40	200n	500m	50		175A	Si△	DO7
218	4E.5	50	6.0n	500m		500m	150J		TO92
219	5E.5	50	6.0n	500m		500m	150J		TO92
220	5R0/18	50	6.0n	.50			175J	Si▼	TO18

SYMBOLS AND CODES EXPLAINED IN INTERPRETER

4. HIGH-SPEED DIODES - Fast Recovery/Switching (Cont'd)

IN ORDER OF: (1) IF TEST (2) PIV (3) trr & (4) & VF & (5) TYPE NUMBER

LINE No.	5 TYPE NO.	2 PIV (V)	RECOVERY TIME 3 trr (s)	TEST CONDITIONS 1 IF (A)	4 VR (V)	IR (A)	MAX. TEMP (°C)	MAT.	DRAWING NO.
1▼	5RO/18	50	9.0n	500m	50	1.0	175A	Si	TO18
2	5R1/18	50	10n	.50			175J	Si▼	TO18
3▼	5R2/4	50	10n	500m	50	1.0	175	Si	DO4
4▼	5R2/66	50	10n	500m	50	1.0	175	Si	TO66
5	5R2B	50	10n	500m		1.0	175A	Si▼	TO66
6	5R2S	50	10n	500m		1.0	175J	Si▼	DO4
7	SER9050	50	15n	.50			175J		S538
8▼	5R3/4	50	20n	500m	50	1.0	175	Si	DO4
9▼	5R3/66	50	20n	500m	50	1.0	175	Si	TO66
10	5R3B	50	20n	500m		1.0	175J	Si▼	TO66
11	5R3S	50	20n	500m		1.0	175J	Si▼	DO4
12	FF05	50	20n	500m		1.0	150J	Si	A294a
13	1N5802	50	25n	500m		500m	175A	Si	A146r
14▼	5R4/3	50	25n	500m	50	1.0	175A	Si	TO3
15▼	5R4/4	50	25n	500m	50	1.0	175A	Si	DO4
16	5R4C	50	25n	500m		1.0	175J	Si▼	TO3
17	5R4S	50	25n	500m		1.0	175J	Si▼	DO4
18	GI1001	50	25n	0.5		1.0	75L		E204p
19	GI1101	50	25n	0.5		1.0	75L		E204p
20	MUR405	50	25n	500m		1.0	175J		A282
21	SRSHE05	50	25n	500m		1.0	150		S545⊠*
22	UES101	50	25n	500m		500m	175A	Si	A60aj
23	UES1001	50	25n	500m		1.0	175		A398p
24	UES1101	50	25n	500m		1.0	175A		A380
25	1N6073	50	30n	500m		250m	150L	Si	A294f
26	1N6076	50	30n	500m		250m	150L	Si	A294e
27	1N6079	50	30n	500m		250m	150L	Si	A294e
28	5FF05	50	30n	500m		1.0	150J	Si	A294
29	SER1061	50	30n	500m		100m	200J		TO66
30	SER1061S	50	30n	500m		100m	200J		S4ac
31	UES1301	50	30n	500m		1.0	175A		A398q
32♦	1N5812	50	35n	500m	50	1.0	175J		DO4
33▼	5R4/3C	50	35n	500m	50	1.0	200J	Si	TO3
34▼	5R4/59	50	35n	500m	50	1.0	200J	Si	TO59
35▼	5R5/3	50	35n	500m	50	1.0	175A	Si	TO3
36▼	5R5/5	50	35n	500m	50	1.0	175A	Si	DO5
37	5R5C	50	35n	500m		1.0	175J	Si▼	TO3
38	5R5S	50	35n	500m		1.0	175J	Si▼	DO5
39	BYV61	50	35n	500m		1.0	175	Si§	A249n
40	GI2601	50	35n	0.5		1.0	150S		TO3
41▼	SDR600	50	35n	500m	50	1.0	175J	Si	S324
42▼	SDR900	50	35n	500m	50	1.0	200J	Si	S4ad
43	UES701	50	35n	500m		1.0	175A		DO4
44	UES1401	50	35n	500m		1.0	150		M981
45	UES1501(M)	50	35n	500m		1.0	150		M981
46	UES2401	50	35n	500m		1.0	150		TO220AB
47	UES2601	50	35n	500m		1.0	175A		TO3
48	SER6050	50	40n	.50			175J		S537
49	SER8050	50	40n	.50			200J		S537
50▼	5R5/3D	50	50n	500m	50	1.0	200J	Si	TO3
51▼	5R5/61	50	50n	500m	50	1.0	200J	Si	TO61
52▼	5R6/3	50	50n	500m	50	1.0	175A	Si	TO3
53▼	5R6/3D	50	50n	500m	50	1.0	200J	Si	TO3
54▼	5R6/5	50	50n	500m	50	1.0	175A	Si	DO5
55▼	5R6/61	50	50n	500m	50	1.0	200J	Si	TO61
56	5R6C	50	50n	500m		1.0	175J	Si▼	TO3
57	5R6S	50	50n	500m		1.0	175J	Si▼	DO5
58▼	5R7/3	50	50n	500m	50	1.0	175A	Si	TO3
59▼	5R7/5	50	50n	500m	50	1.0	175A	Si	DO5
60	5R7CD	50	50n	500m		1.0	175J	Si▼	TO3
61	BYW07-50	50	50n	500m	30		150	Si	DO5
62	SDR1A	50	50n	500m		1.0	175J		DO41
63▼	SDR3A	50	50n	500m	50	1.0	175A	Si	A313n
64♦	SEA2601	50	50n	500m	50	1.0	175J	Si	TO3
65♦	SER801	50	50n	500m	50	1.0	175J	Si	S4ad
66▼	SER1061B	50	50n	500m	50	1.0	175A	Si	TO66
67	UES601	50	50n	500m		1.0	175A		TO3
68	UES801	50	50n	500m		1.0	175A		DO5
69▼	5R7/3D	50	75n	500m	50	1.0	200J	Si	TO3
70▼	5R7/61	50	75n	500m	50	1.0	200J	Si	TO61
71▼	5R8/3	50	75n	500m	50	1.0	175A	Si	TO3
72▼	5R8/3D	50	75n	500m	50	1.0	200J	Si	TO3
73▼	5R8/5	50	75n	500m	50	1.0	175A	Si	DO5
74▼	5R8/63	50	75n	500m	50	1.0	200J	Si	TO63
75	5R8CD	50	75n	500m		1.0	175J	Si▼	TO3
76	5R8S	50	75n	500m		1.0	175J	Si▼	DO5
77	SCSNL05L	50	85n	500m		1.0	150A	Si	M493
78	SCSNL05W	50	85n	500m		1.0	150A	Si	M492
79	1N5836	50	100n	500m		1.0	200A	Si	A294
80	SES5001	50	100n	500m		1.0	175		A398p
81	SES5301	50	100n	500m		1.0	170		A398q
82	SES5401	50	100n	500m		1.0	150		M981
83	SES5401C	50	100n	500m		1.0	150		Y220AB
84	SES5501(M)	50	100n	500m		1.0	150		M981
85	SES5601C	50	100n	500m		1.0	175		TO3
86	SES5701	50	100n	500m		1.0	175		DO4
87	SES5801	50	100n	500m		1.0	175		DO5
88	SRP100A	50	100n	500m		1.0	125		DO41
89	SRP300A	50	100n	500m		1.0	55A		
90	SRP600A	50	100n	0.5		1.0	125		A1eg
91	1N5415	50	150n	500m		1.0	175A	Si	A248
92	FR101	50	150n	0.5	30		175J	Si	DO41
93	FR301	50	150n	0.5	30		175J	Si	DO27
94▼	PR3001	50	150n	500m	50	1.0	175J	Si	DO27
95	RAB005	50	150n	500m		1.0	175A	Si	A1ez
96	RG1A	50	150n	500m		1.0	175A	Si	A313e
97	RG2A	50	150n	500m		1.0	175	Si	A313e
98	RG4A	50	150n	.5		1.0	175A	Si	A313n
99	RGP15A	50	150n	500m		1.0	175A		DO15
100	RGP20A	50	150n	500m		1.0	175	Si	DO27
101	RGP25A	50	150n	500m		1.0	175	Si	A3ac
102	RGP30A	50	150n	500m		1.0	175A		A3ac
103	RIB005	50	150n	.50		1.0	175J	Si	A1eu
104	S1A05F	50	150n	500m		250m	175A	Δ	A1ty
105	S3A05F	50	150n	500m		250m	175A	Δ	A1ey
106	S5A05F	50	150n	500m		250m	175A	Δ	A1ey
107	TS5	50	150n	500m		1.0	175A	Si	
108♦	1N3879	50	200n	500m	50	1.0	150C	Si	DO4⊠
109♦	1N3889	50	200n	500m	50	1.0	150C	Si	DO4⊠
110♦	1N3909	50	200n	500m	50	1.0	150C	Si	DO5⊠
111	1205	50	200n	500m		1.0	75L		A277k
112	1205A	50	200n	500m		1.0	75L	Si	A277k
113	3205	50	200n	500m		1.0	75L		A277f
114	3205A	50	200n	500m		1.0	75L	Si	A277f
115	PBR05	50	200n	.50		1.0	125C	Si	20
116	RG3A	50	200n	500m		1.0	175A	Si	A249d
117	SRS305FR	50	200n	500m		1.0	175A	Si	A340b
118	RP1A	50	250n	500m		1.0	175A	Si	DO41
119	SRS105FR	50	250n	500m		1.0	175A	Si	A340
120	SRS205FR	50	250n	500m		1.0	175A	Si	A340
121	1SX170	50	350n	500m	30		175A	Si	A1vn
122	BR5A5	50	400n	0.5		1.0	75	Si	A1rx
123	1505	50	500n	500m		1.0	75L		A277k
124	1505A	50	500n	500m		1.0	75L	Si	A277k
125	3505	50	500n	500m		1.0	75L		A277f
126	3505A	50	500n	500m		1.0	75L	Si	A277f
127	G1A	50	2.0u	500m		1.0	175A		A313b
128	G2A	50	2.0u	500m		1.0	175A		A94j
129	GP15A	50	2.0u	500m		1.0	175A		DO15
130	GP20A	50	2.5u	500m		1.0	175A		DO27
131	G3A	50	3.0u	500m		1.0	175J		A249d
132	GP30A	50	3.0u	500m		1.0	175A		A3ac
133▼	1N1199A	50	5.0u	500m	50	1.0	175B	Si	DO4
134▼	1N5171	50	5.0u	500m	50	1.0	175A	Si	DO27
135	1S2348H	65	8.0n	500m		500m	175J	Si§#	DO35
136	7E.5	70	6.0n	500m		500m	150J		TO92
137	7R0/18	70	6.0n	.50			175J	Si▼	TO18
138▼	7RO/18	70	9.0n	500m	70	1.0	175A	Si	TO18
139	7R1/18	70	10n	.50			175J	Si▼	TO18
140▼	7R2/4	70	10n	500m	70	1.0	175	Si	DO4
141▼	7R2/66	70	10n	500m	70	1.0	175	Si	TO66
142	7R2B	70	10n	500m		1.0	175A	Si▼	TO66
143	7R2S	70	10n	500m		1.0	175J	Si▼	DO4
144	1N3298A	70	20n	500m	30	50m	175A	Si	A1cs
145▼	7R3/4	70	20n	500m	70	1.0	175	Si	DO4
146▼	7R3/66	70	20n	500m	70	1.0	175	Si	TO66
147	7R3B	70	20n	500m		1.0	175J	Si▼	TO66
148	7R3S	70	20n	500m		1.0	175J	Si▼	DO4
149▼	7R4/3	70	25n	500m	70	1.0	175A	Si	TO3
150▼	7R4/4	70	25n	500m	70	1.0	175A	Si	DO4
151	7R4C	70	25n	500m		1.0	175J	Si▼	TO3
152	7R4S	70	25n	500m		1.0	175J	Si▼	DO4
153▼	7R4/3C	70	35n	500m	70	1.0	200J	Si	TO3
154▼	7R4/59	70	35n	500m	70	1.0	200J	Si	TO59
155▼	7R5/3	70	35n	500m	70	1.0	175A	Si	TO3
156▼	7R5/5	70	35n	500m	70	1.0	175A	Si	DO5
157	7R5C	70	35n	500m		1.0	175J	Si▼	TO3
158	7R5S	70	35n	500m		1.0	175J	Si▼	DO5
159▼	7R5/3D	70	50n	500m	70	1.0	200J	Si	TO3
160▼	7R5/61	70	50n	500m	70	1.0	200J	Si	TO61
161▼	7R6/3	70	50n	500m	70	1.0	175A	Si	TO3
162▼	7R6/3D	70	50n	500m	70	1.0	200J	Si	TO3
163▼	7R6/5	70	50n	500m	70	1.0	175A	Si	DO5
164▼	7R6/61	70	50n	500m	70	1.0	200J	Si	TO61
165	7R6C	70	50n	500m		1.0	175J	Si▼	TO3
166	7R6S	70	50n	500m		1.0	175J	Si▼	DO5
167▼	7R7/3	70	50n	500m	70	1.0	175A	Si	TO3
168▼	7R7/5	70	50n	500m	70	1.0	175A	Si	DO5
169	7R7CD	70	50n	500m		1.0	175J	Si▼	TO3
170▼	7R7/3D	70	75n	500m	70	1.0	200J	Si	TO3
171▼	7R7/61	70	75n	500m	70	1.0	200J	Si	TO61
172▼	7R8/3	70	75n	500m	70	1.0	175A	Si	TO3
173▼	7R8/3D	70	75n	500m	70	1.0	200J	Si	TO3
174▼	7R8/5	70	75n	500m	70	1.0	175A	SI	DO5
175▼	7R8/63	70	75n	500m	70	1.0	200J	SI	TO63
176	7R8CD	70	75n	500m		1.0	175J	Si▼	TO3
177	7R8S	70	75n	500m		1.0	175J	Si▼	DO5
178	1N921	70	300n	500m	50		175J	Si	DO7
179	1N691	70	800n	500m	50		175J	Si	DO7
180	1N5803	75	25n	500m		500m	175A	Si	A146r
181	UES102	75	25n	500m		500m	175A	Si	A60aj
182♦	SEA2602	75	50n	500m	75	1.0	175J	Si	TO3
183	1SX171	75	350n	500m	30		175A	Si	A1vn
184	10E.5	100	6.0n	500m		500m	150J		TO92
185	10R0/18	100	6.0n	.50			175J	Si▼	TO18
186▼	10RO/18	100	9.0n	500m	100	1.0	175A	Si	TO18
187	10R1/18	100	10n	.50			175J	Si▼	TO18
188▼	10R2/4	100	10n	500m	100	1.0	175	Si	DO4
189▼	10R2/66	100	10n	500m	100	1.0	175	Si	TO66
190	10R2B	100	10n	500m		1.0	175A	Si▼	TO66
191	10R2S	100	10n	500m		1.0	175J	Si▼	DO4
192	SER9100	100	15n	.50			175J		S538
193▼	10R3/4	100	20n	500m	100	1.0	175	Si	DO4
194▼	10R3/66	100	20n	500m	100	1.0	175	Si	TO66
195	10R3B	100	20n	500m		1.0	175J	Si▼	TO66
196	10R3S	100	20n	500m		1.0	175J	Si▼	DO4
197	1N5804	100	25n	500m		500m	175A	Si	A146r
198▼	10R4/3	100	25n	500m	100	1.0	175A	Si	TO3
199▼	10R4/4	100	25n	500m	100	1.0	175A	Si	DO4
200	10R4C	100	25n	500m		1.0	175J	Si▼	TO3
201	10R4S	100	25n	500m		1.0	175J	Si▼	DO4
202	GI1002	100	25n	0.5		1.0	75L		E204p
203	GI1102	100	25n	0.5		1.0	75L		E204p
204	MUR410	100	25n	500m		1.0	175J		A282
205▼	SHA395A	100	25n	500m	100	1.0	200J	Si	TO66
206	SRSHE10	100	25n	500m		1.0	150		S545⊠*
207	UES103	100	25n	500m		500m	175A	Si	A60aj
208	UES1002	100	25n	500m		1.0	175		A398p
209	UES1102	100	25n	500m		1.0	175A		A380
210	1N6074	100	30n	500m		250m	150L	Si	A294f
211	1N6077	100	30n	500m		250m	150L	Si	A294e
212	1N6080	100	30n	500m		250m	150L	Si	A294e
213	5FF10	100	30n	500m		1.0	150J	Si	A294
214♦	BYV62	100	30n	500m		1.0	175	Si§	A249n
215	FF10	100	30n	500m		1.0	150J	Si	A294a
216▼	SDA356BUF	100	30n	500m	100	1.0	125	Si	M1355
217♦	UES1302	100	30n	500m		1.0	175A		A398q
218♦	1N5814	100	35n	500m	100	1.0	175J		DO4
219▼	10R4/3C	100	35n	500m	100	1.0	200J	Si	TO3
220▼	10R4/59	100	35n	500m	100	1.0	200J	Si	TO59

SYMBOLS AND CODES EXPLAINED IN INTERPRETER

4. HIGH-SPEED DIODES - Fast Recovery/Switching (Cont'd)

IN ORDER OF: (1) IF TEST (2) PIV (3) trr & (4) & VF & (5) TYPE NUMBER

LINE No.	5 TYPE NO.	2 PIV (V)	RECOVERY TIME 3 trr (s)	TEST CONDITIONS 1 IF (A)	4 VR (V)	IR (A)	MAX. TEMP (°C)	MAT.	DRAWING NO.
1▼	10R5/3	100	35n	500m	100	1.0	175A	Si	TO3
2▼	10R5/5	100	35n	500m	100	1.0	175A	Si	DO5
3	10R5C	100	35n	500m		1.0	175J	Si▼	TO3
4	10R5S	100	35n	500m		1.0	175J	Si▼	DO5
5	GI2602	100	35n	0.5		1.0	150S		TO3
6▼	SDR601	100	35n	500m	100	1.0	175J	Si	S324
7▼	SDR901	100	35n	500m	100	1.0	200J	Si	S4ad
8▼	SHA394A	100	35n	500m	100	1.0	200J	Si	TO3
9▼	SHA398A	100	35n	500m	100	1.0	200J	Si	TO61
10	UES702	100	35n	500m		1.0	175A		DO4
11	UES1402	100	35n	500m		1.0	150		M981
12	UES1502(M)	100	35n	500m		1.0	150		M981
13	UES2402	100	35n	500m		1.0	150		TO220AB
14	UES2602	100	35n	500m		1.0	175A		TO3
15	SER6100	100	40n	.50			175J		S537
16	SER8100	100	40n	.50			200J		S537
17▼	10R5/3D	100	50n	500m	100	1.0	200J	Si	TO3
18▼	10R5/61	100	50n	500m	100	1.0	200J	Si	TO61
19▼	10R6/3	100	50n	500m	100	1.0	175A	Si	TO3
20▼	10R6/3D	100	50n	500m	100	1.0	200J	Si	TO3
21▼	10R6/5	100	50n	500m	100	1.0	175A	Si	DO5
22▼	10R6/61	100	50n	500m	100	1.0	200J	Si	TO61
23	10R6C	100	50n	500m		1.0	175J	Si▼	TO3
24	10R6S	100	50n	500m		1.0	175J	Si▼	DO5
25▼	10R7/3	100	50n	500m	100	1.0	175A	Si	TO3
26▼	10R7/5	100	50n	500m	100	1.0	175A	Si	DO5
27	10R7CD	100	50n	500m		1.0	175J	Si▼	TO3
28	BYW07-100	100	50n	500m	30		150	Si	DO5
29	SDR1B	100	50n	500m		1.0	175J		DO41
30▼	SDR3B	100	50n	500m	100	1.0	175A	Si	A313n
31♦	SEA2603	100	50n	500m	100	1.0	175J	Si	TO3
32♦	SER802	100	50n	500m	100	1.0	175J	Si	S4ad
33	UES602	100	50n	500m		1.0	175A		TO3
34	UES802	100	50n	500m		1.0	175A		DO5
35▼	SDR804	100	60n	500m	100	1.0	175J	Si	DO5
36▼	10R7/3D	100	75n	500m	100	1.0	200J	Si	TO3
37▼	10R7/61	100	75n	500m	100	1.0	200J	Si	TO61
38▼	10R8/3	100	75n	500m	100	1.0	175A	Si	TO3
39▼	10R8/3D	100	75n	500m	100	1.0	200J	Si	TO3
40▼	10R8/5	100	75n	500m	100	1.0	175A	Si	DO5
41▼	10R8/63	100	75n	500m	100	1.0	200J	SI	TO63
42	10R8CD	100	75n	500m		1.0	175J	Si▼	TO3
43	10R8S	100	75n	500m		1.0	175J	Si▼	DO5
44▼	SDA356BF	100	100n	500m	100	1.0	125	Si	M1355
45	SES5002	100	100n	500m		1.0	175		A398p
46	SES5302	100	100n	500m		1.0	170		A398q
47	SES5402	100	100n	500m		1.0	150		M981
48	SES5402C	100	100n	500m		1.0	150		Y220AB
49	SES5502(M)	100	100n	500m		1.0	150		M981
50	SES5602C	100	100n	500m		1.0	175		TO3
51	SES5702	100	100n	500m		1.0	175		DO4
52	SES5802	100	100n	500m		1.0	175		DO5
53	SRP100B	100	100n	500m		1.0	125		DO41
54	SRP300B	100	100n	500m		1.0	55A		
55	SRP600B	100	100n	0.5		1.0	125		A1eg
56♦	1N5186	100	150n	500m	100	1	200J	Si	A146e
57	1N5416	100	150n	500m		1.0	175A	Si	A248
58	3SF1	100	150n	500m		1.0	175A	Si	A294h
59	FR102	100	150n	0.5	30		175J	Si	DO41
60	FR302	100	150n	0.5	30		175J	Si	DO27
61	RAB010	100	150n	500m		1.0	175A	Si	A1ez
62	RG1B	100	150n	500m		1.0	175A	Si	A313e
63	RG2B	100	150n	500m		1.0	175	Si	A313e
64	RG4B	100	150n	.5		1.0	175A	Si	A313n
65	RGP10B	100	150n	500m		1.0	175A	Si	DO41
66	RGP15B	100	150n	500m		1.0	175A		DO15
67	RGP20B	100	150n	500m		1.0	175	Si	DO27
68	RGP25B	100	150n	500m		1.0	175	Si	A3ac
69	RGP30B	100	150n	500m		1.0	175A		A3ac
70	RIB010	100	150n	.50		1.0	175J	Si	A1eu
71	S1A1F	100	150n	500m		250m	175A	Δ	A1ty
72	S3A1F	100	150n	500m		250m	175A	Δ	A1ey
73	S5A1F	100	150n	500m		1.0	175A	Δ	A1ey
74	TS10	100	150n	500m		1.0	175A	Si	
75♦	1N3880	100	200n	500m	100	1.0	150C	Si	DO4Ø
76♦	1N3885	100	200n	500m	100	1.0	150C	Si	DO10
77♦	1N3890	100	200n	500m	100	1.0	150C	Si	DO4Ø
78♦	1N3910	100	200n	500m	100	1.0	150C	Si	DO5Ø
79	121	100	200n	500m		1.0	75L		A277k
80	121A	100	200n	500m		1.0	75L	Si	A277k
81	321	100	200n	500m		1.0	75L		A277f
82	321A	100	200n	500m		1.0	75L	Si	A277f
83	PBR10	100	200n	.50		1.0	125C	Si	20
84	RG3B	100	200n	500m		1.0	175A	Si	A249d
85	SRS310FR	100	200n	500m		1.0	175A	Si	A340a
86	RP1B	100	250n	500m		1.0	175A	Si	DO41
87	SRS110FR	100	250n	500m		1.0	175A	Si	A340
88	SRS210FR	100	250n	500m		1.0	175A	Si	A340
89	1N922	100	300n	500m	50		175J	Si	DO7
90♦	BYV12	100	300n	500m		1.0	175J	Si§	A249k
91	1SX172	100	350n	500m	30		175A	Si	A1vn
92	BR5B5	100	400n	0.5		1.0	75	Si	A1rx
93	151	100	500n	500m		1.0	75L		A277k
94	151A	100	500n	500m		1.0	75L	Si	A277k
95	351	100	500n	500m		1.0	75L		A277f
96	351A	100	500n	500m		1.0	75L	Si	A277f
97	1N692	100	800n	500m	50		175J	Si	DO7
98	G1B	100	2.0u	500m		1.0	175A		A313b
99	G2B	100	2.0u	500m		1.0	175A		A94j
100	GP15B	100	2.0u	500m		1.0	175A		DO15
101	GP20B	100	2.5u	500m		1.0	175A		DO27
102	G3B	100	3.0u	500m		1.0	175J		A249d
103	GP30B	100	3.0u	500m		1.0	175A		A3ac
104▼	1N1200A	100	5.0u	500m	100	1.0	175	Si	DO4
105▼	1N5059	100	5.0u	500m	200	1.0	160A	Si	Altc
106▼	1N5172	100	5.0u	500m	100	1.0	175A	Si	DO27
107	SRS120FR	120	250n	500m		1.0	175A	Si	A340
108	12R0/18	125	6.0n	.50			175J	Si▼	TO18
109▼	12RO/18	125	9.0n	500m	125	1.0	175A	Si	TO18
110	12R1/18	125	10n	.50			175J	Si▼	TO18
111▼	12R2/4	125	10n	500m	125	1.0	175	Si	DO4
112▼	12R2/66	125	10n	500m	125	1.0	175	Si	TO66
113	12R2B	125	10n	500m		1.0	175J	Si▼	TO66
114	12R2S	125	10n	500m		1.0	175J	Si▼	DO4
115▼	12R3/4	125	20n	500m	125	1.0	175	Si	DO4
116▼	12R3/66	125	20n	500m	125	1.0	175	Si	TO66
117	12R3B	125	20n	500m		1.0	175J	Si▼	TO66
118	12R3S	125	20n	500m		1.0	175J	Si▼	DO4
119	1N5805	125	25n	500m		500m	175A	Si	A146r
120▼	12R4/3	125	25n	500m	125	1.0	175A	Si	TO3
121▼	12R4/4	125	25n	500m	125	1.0	175A	Si	DO4
122	12R4C	125	25n	500m		1.0	175J	Si▼	TO3
123	12R4S	125	25n	500m		1.0	175J	Si▼	DO4
124	UES104	125	25n	500m		500m	175A	Si	A60aj
125▼	12R4/3C	125	35n	500m	125	1.0	200J	Si	TO3
126▼	12R4/59	125	35n	500m	125	1.0	200J	Si	TO59
127▼	12R5/3	125	35n	500m	125	1.0	175A	Si	TO3
128▼	12R5/5	125	35n	500m	125	1.0	175A	Si	DO5
129	12R5C	125	35n	500m		1.0	175J	Si▼	TO3
130	12R5S	125	35n	500m		1.0	175J	Si▼	DO5
131▼	12R5/3D	125	50n	500m	125	1.0	200J	Si	TO3
132▼	12R5/61	125	50n	500m	125	1.0	200J	Si	TO61
133▼	12R6/3	125	50n	500m	125	1.0	175A	Si	TO3
134▼	12R6/3D	125	50n	500m	125	1.0	200J	Si	TO3
135▼	12R6/5	125	50n	500m	125	1.0	175A	Si	DO5
136▼	12R6/61	125	50n	500m	125	1.0	200J	Si	TO61
137	12R6C	125	50n	500m		1.0	175J	Si▼	TO3
138	12R6S	125	50n	500m		1.0	175J	Si▼	DO5
139▼	12R7/3	125	50n	500m	125	1.0	175A	Si	TO3
140▼	12R7/5	125	50n	500m	125	1.0	175A	Si	DO5
141	12R7CD	125	50n	500m		1.0	175J	Si▼	TO3
142▼	12R7/3D	125	75n	500m	125	1.0	200J	Si	TO3
143▼	12R7/61	125	75n	500m	125	1.0	200J	Si	TO61
144▼	12R8/3	125	75n	500m	125	1.0	175A	Si	TO3
145▼	12R8/3D	125	75n	500m	125	1.0	200J	Si	TO3
146▼	12R8/5	125	75n	500m	125	1.0	175A	Si	DO5
147▼	12R8/63	125	75n	500m	125	1.0	200J	SI	TO63
148	12R8CD	125	75n	500m		1.0	175J	Si▼	TO3
149	12R8S	125	75n	500m		1.0	175J	Si▼	DO5
150	1N923	130	300n	500m	50		175J	Si	DO7
151	1N693	130	800n	500m	50		175J	Si	DO7
152	15R0/18	150	6.0n	.50			175J	Si▼	TO18
153▼	15RO/18	150	9.0n	500m	150	1.0	175	Si	TO18
154	15R1/18	150	10n	.50			175J	Si▼	TO18
155▼	15R2/4	150	10n	500m	150	1.0	175	Si	DO4
156▼	15R2/66	150	10n	500m	150	1.0	175	Si	TO66
157	15R2B	150	10n	500m		1.0	175J	Si▼	TO66
158	15R2S	150	10n	500m		1.0	175J	Si▼	DO4
159	SER9150	150	15n	.50			175J		S538
160▼	15R3/4	150	20n	500m	150	1.0	175	Si	DO4
161▼	15R3/66	150	20n	500m	150	1.0	175A	Si	TO66
162	15R3B	150	20n	500m		1.0	175J	Si▼	TO66
163	15R3S	150	20n	500m		1.0	175J	Si▼	DO4
164	FF15	150	20n	500m		1.0	150J	Si	A294a
165	1N5806	150	25n	500m		500m	175A	Si	A146r
166▼	15R4/3	150	25n	500m	150	1.0	175A	Si	TO3
167▼	15R4/4	150	25n	500m	150	1.0	175A	Si	DO4
168	15R4C	150	25n	500m		1.0	175J	Si▼	TO3
169	15R4S	150	25n	500m		1.0	175J	Si▼	DO4
170	GI1003	150	25n	0.5		1.0	75L		E204p
171	GI1103	150	25n	0.5		1.0	75L		E204p
172	MUR415	150	25n	500m		1.0	175J		A282
173▼	SHA395B	150	25n	500m	150	1.0	200J	Si	TO66
174	SRSHE15	150	25n	500m		1.0	150		S545Ø*
175	UES1003	150	25n	500m		1.0	175		A398p
176	UES1103	150	25n	500m		1.0	175A		A380
177	1N6075	150	30n	500m		250m	150L	Si	A294f
178	1N6078	150	30n	500m		250m	150L	Si	A294e
179	1N6081	150	30n	500m		250m	150L	Si	A294e
180♦	5FF15	150	30n	0.5		1	175J	Si	A294
181♦	BYV63	150	30n	500m		1.0	175	Si§	
182♦	UES1303	150	30n	500m		1.0	175A		A398q
183♦	1N5816	150	35n	500m	150	1.0	175J		DO4
184▼	15R4/3C	150	35n	500m	150	1.0	200J	Si	TO3
185▼	15R4/59	150	35n	500m	150	1.0	200J	Si	TO59
186♦	15R5/3	150	35n	500m	155	1.0	175A	Si	TO3
187▼	15R5/5	150	35n	500m	150	1.0	175A	Si	DO5
188	15R5C	150	35n	500m		1.0	175J	Si▼	TO3
189	15R5S	150	35n	500m		1.0	175J	Si▼	DO5
190	GI2603	150	35n	0.5		1.0	150S		TO3
191▼	SHA394B	150	35n	500m	150	1.0	200J	Si	TO3
192▼	SHA398B	150	35n	500m	150	1.0	200J	Si	TO61
193	UES703	150	35n	500m		1.0	175A		DO4
194	UES1403	150	35n	500m		1.0	150		M981
195	UES1503(M)	150	35n	500m		1.0	150		M981
196	UES2403	150	35n	500m		1.0	150		TO220AB
197	UES2603	150	35n	500m		1.0	175A		TO3
198	SER6150	150	40n	.50			175J		S537
199	SER8150	150	40n	.50			200J		S537
200▼	15R5/3D	150	50n	500m	150	1.0	200J	Si	TO3
201▼	15R5/61	150	50n	500m	150	1.0	200J	Si	TO61
202▼	15R6/3	150	50n	500m	150	1.0	175A	Si	TO3
203▼	15R6/3D	150	50n	500m	150	1.0	200J	Si	TO3
204▼	15R6/5	150	50n	500m	150	1.0	175A	Si	DO5
205▼	15R6/61	150	50n	500m	150	1.0	200J	Si	TO61
206	15R6C	150	50n	500m		1.0	175J	Si▼	TO3
207	15R6S	150	50n	500m		1.0	175J	Si▼	DO5
208▼	15R7/3	150	50n	500m	150	1.0	175A	Si	TO3
209▼	15R7/5	150	50n	500m	150	1.0	175A	Si	DO5
210	15R7CD	150	50n	500m		1.0	175J	Si▼	TO3
211	BYW07-150	150	50n	500m	30		150	Si	DO5
212	SDR803	150	50n	500m		1.0	150J		DO5
213♦	SER803	150	50n	500m	150	1.0	175J	Si	S4ad
214	UES603	150	50n	500m		1.0	175A		TO3
215	UES803	150	50n	500m		1.0	175A		DO5
216▼	SDR805	150	60n	500m	150	1.0	175J	Si	DO5
217▼	15R7/3D	150	75n	500m	150	1.0	200J	Si	TO3
218▼	15R7/61	150	75n	500m	150	1.0	200J	Si	TO61
219▼	15R8/3	150	75n	500m	150	1.0	175A	Si	TO3
220▼	15R8/3D	150	75n	500m	150	1.0	200J	Si	TO3

SYMBOLS AND CODES EXPLAINED IN INTERPRETER

4. HIGH-SPEED DIODES - Fast Recovery/Switching (Cont'd)

IN ORDER OF: (1) IF TEST (2) PIV (3) trr & (4) & VF & (5) TYPE NUMBER

LINE No.	5 TYPE NO.	2 PIV (V)	RECOVERY TIME 3 trr (s)	TEST CONDITIONS 1 IF (A)	4 VR (V)	IR (A)	MAX. TEMP (°C)	MAT.	DRAWING NO.
1▼	15R8/5	150	75n	500m	150	1.0	175A	Si	DO5
2▼	15R8/63	150	75n	500m	150	1.0	200J	Si	TO63
3	15R8CD	150	75n	500m		1.0	175J	Si▼	TO3
4	15R8S	150	75n	500m		1.0	175J	Si▼	DO5
5	SES5003	150	100n	500m		1.0	175		A398p
6	SES5303	150	100n	500m		1.0	170		A398q
7	SES5403	150	100n	500m		1.0	150		M981
8	SES5403C	150	100n	500m		1.0	150		Y220AB
9	SES5503(M)	150	100n	500m		1.0	150		M981
10	SES5603C	150	100n	500m		1.0	175		TO3
11	SES5703	150	100n	500m		1.0	175		DO4
12	SES5803	150	100n	500m		1.0	175		DO5
13▼	1N1201A	150	5.0u	500m	150	1.0	175	Si	DO4
14	GI1004	200	25n	0.5		1.0	75L		E204p
15	GI1104	200	25n	0.5		1.0	75L		E204p
16▼	SHA395C	200	25n	500m	200	1.0	200J	Si	TO66
17	BYV26A	200	30n	500m	200	1.0	175J	Si	A333c
18▼	SDA356DUF	200	30n	500m	200	1.0	125	Si	M1355
19▼	SHA396A	200	30n	500m	200	1.0	200J	Si	TO59
20	GI2604	200	35n	0.5		1.0	150S		TO3
21▼	SDR602	200	35n	500m	200	1.0	175J	Si	S324
22▼	SDR622/59	200	35n	500m	200	1.0	200J	Si	TO59
23▼	SDR902	200	35n	500m	200	1.0	200J	Si	S4ad
24▼	SHA394C	200	35n	500m	200	1.0	200J	Si	TO3
25▼	SHA398C	200	35n	500m	200	1.0	200J	Si	TO61
26	UES1404(M)	200	35n	500m		1.0	150		M981
27	UES1504(M)	200	35n	500m		1.0	150		M981
28	UES2404(M)	200	35n	500m		1.0	150		M981
29▼	SHF1102	200	40n	500m	200	1.0	175J	Si	A333j
30▼	SHF1302	200	40n	500m	200	1.0	175J	Si	A333k
31	BYT12-200	200	50n	.50	25		150	Si	DO4
32	BYW07-200	200	50n	500m	30		150	Si	DO5
33	SDR1D	200	50n	500m		1.0	175J		DO41
34▼	SDR3D	200	50n	500m	200	1.0	175A	Si	A313n
35♦	SER804	200	50n	500m	200	1.0	175J	Si	S4ad
36♦	UES804	200	50n	500m		1.0	150		DO5
37	UES1104	200	50n	500m		1.0	150		A380
38	UES1304	200	50n	500m		1.0	150		A380a
39	UES2604	200	50n	500m		1.0	150		TO3
40▼	SDR806	200	60n	500m	200	1.0	175J	Si	DO5
41▼	SDR1304	200	70n	500m	200	1.0	175J	Si	A333k
42▼	SDA356DF	200	100n	500m	200	1.0	125	Si	M1355
43	SES5404(M)	200	100n	500m		1.0	150		M981
44	SES5404C(M)	200	100n	500m		1.0	150		M981
45	SES5504(M)	200	100n	500m		1.0	150		M981
46	SRP100D	200	100n	0.5		1.0	125		DO41
47♦	1N5187	200	150n	500m	200	1	200J	Si	A146e
48	1N5417	200	150n	500m		1.0	175A	Si	A248
49	1N5615	200	150n	500m		1.0	200A	Si	A109c
50	3SF2	200	150n	500m		1.0	175A	Si	A294g
51	FR103	200	150n	0.5	30		175J	Si	DO41
52	FR303	200	150n	0.5	30		175J	Si	DO27
53▼	PR3003	200	150n	500m	200	1.0	175J	Si	DO27
54	RAB020	200	150n	500m		1.0	175A	Si	A1ez
55	RG1D	200	150n	500m		1.0	175A	Si	A313e
56	RG2D	200	150n	500m		1.0	175	Si	A313e
57	RG4D	200	150n	.5		1.0	175A	Si	A313n
58	RGP10D	200	150n	500m		1.0	175A	Si	DO41
59	RGP15D	200	150n	500m		1.0	175A		DO15
60	RGP20D	200	150n	500m		1.0	175	Si	DO27
61	RGP25D	200	150n	500m		1.0	175	Si	A3ac
62	RGP30D	200	150n	500m		1.0	175A		A3ac
63	RIB020	200	150n	.50		1.0	175J	Si	A1eu
64	S1A2F	200	150n	500m		250m	175A	△	A1ty
65	S2F	200	150n	500m		1.0	175A	Si	A294h
66	S3A2F	200	150n	500m		250m	175A	△	A1ey
67	S5A2F	200	150n	500m		1.0	175A	△	A1ey
68	SRP300D	200	150n	500m		1.0	55A		
69	SRP600D	200	150n	0.5		1.0	125		A1eg
70	TS20	200	150n	500m		1.0	175A	Si	
71♦	1N3881	200	200n	500m	200	1.0	150C	Si	DO4Ø
72♦	1N3886	200	200n	500m	200	1.0	150C	Si	DO10
73♦	1N3891	200	200n	500m	200	1.0	150C	Si	DO4Ø
74♦	1N3911	200	200n	500m	200	1.0	150C	Si	DO5Ø
75	122	200	200n	500m		1.0	75L		A277k
76	122A	200	200n	500m		1.0	75L	Si	A277k
77	322	200	200n	500m		1.0	75L		A277f
78	322A	200	200n	500m		1.0	75L	Si	A277f
79♦	BYW32	200	200n	500m		1.0	175J	Si§	A249k
80♦	BYW72	200	200n	500m		1.0	175J	Si§	A249l
81	PBR20	200	200n	.50		1.0	125C	Si	20
82	RG3D	200	200n	500m		1.0	175A	Si	A249d
83	SRS320FR	200	200n	500m		1.0		Si	A340a
84	SRS220FR	200	250n	500m		1.0	175A	Si	A340
85	1SX173	200	350n	500m	30		175A	Si	A1vn
86	BR5C5	200	400n	0.5		1.0	75	Si	A1rx
87	152	200	500n	500m		1.0	75L		A277k
88	152A	200	500n	500m		1.0	75L	Si	A277k
89	352	200	500n	500m		1.0	75L		A277f
90	352A	200	500n	500m		1.0	75L	Si	A277f
91	G1D	200	2.0u	500m		1.0	175A		A313b
92	G2D	200	2.0u	500m		1.0	175A		A94j
93	GP15D	200	2.0u	500m		1.0	175A		DO15
94	GP20D	200	2.5u	500m		1.0	175A		DO27
95	G3D	200	3.0u	500m		1.0	175J		A249d
96	GP30D	200	3.0u	500m		1.0	175A		A3ac
97♦	BYW52	200	4.0u	500m		1.0	175J	Si	A249k
98▼	BYW82	200	4.0u	500m		1.0	175J	Si	A249l
99▼	BYX82	200	4.0u	500m		1.0	175J	Si	A94S
100▼	1N1124A	200	5.0u	500m	200	1.0	175B	Si	DO4
101▼	1N1186	200	5.0u	500m	200	1.0	190C	Si	DO5
102▼	1N1202A	200	5.0u	500m	200	1.0	150B	Si	DO4
103▼	1N4245	200	5.0u	500m	200	1.0	160A	Si	Altc
104▼	1N4517	200	5.0u	500m	200	1.0	175A	Si	A52c
105♦	1N5550	200	5.0u	500m	200	1.0	200A	Si	A248a
106♦	1N5614	200	5.0u	500m	200	1.0	200A	Si	A109c
107▼	1N5624	200	5.0u	500m	200	1.0	175A	Si	A249
108▼	SPD546A	200	5.0u	500m	200	1.0	175J	Si	Alce
109▼	SDR807	250	60n	500m	250	1.0	175J	Si	DO5
110▼	SHA396B	300	30n	500m	300	1.0	200J	Si	TO59
111	GI2605	300	35n	0.5		1.0	150S		TO3
112▼	SDR603	300	35n	500m	300	1.0	175J	Si	S324
113▼	SDR623/59	300	35n	500m	300	1.0	200J	Si	TO59
114▼	SDR903	300	35n	500m	300	1.0	200J	Si	S4ad
115▼	SDR933/61	300	35n	500m	300	1.0	200J	Si	TO61
116▼	SHF1103	300	40n	500m	300	1.0	175J	Si	A333j
117▼	SHF1303	300	40n	500m	300	1.0	175J	Si	A333k
118	BYT12-300	300	50n	.50	25		150	Si	DO4
119♦	UES805	300	50n	500m		1.0	150		DO5
120	UES1105	300	50n	500m		1.0	150		A380
121	UES1305	300	50n	500m		1.0	150		A380a
122	UES2605	300	50n	500m		1.0	150		TO3
123▼	SDR943/61	300	80n	500m	300	1.0	200J	Si	TO61
124	RG1F	300	150n	500m		1.0	175	Si	A313e
125	RG2F	300	150n	500m		1.0	175	Si	A313e
126	RGP10F	300	150n	500m		1.0		Si	DO41
127	RGP15F	300	150n	500m		1.0	175	Si	DO15
128	RGP20F	300	150n	500m		1.0	175	Si	DO27
129	RGP25F	300	150n	500m		1.0	175	Si	A3AC
130	RGP30F	300	150n	500m		1.0	175	Si	A3ac
131	S1A3F	300	150n	500m		250m	175A	△	A1ty
132	S3A3F	300	150n	500m		250m			A1ey
133	S5A3F	300	150n	500m		1.0			A1ey
134	SF3	300	150n	500m		1	175J	Si	A1bs
135♦	1N3882	300	200n	500m	300	1.0	150C	Si	DO4Ø
136♦	1N3892	300	200n	500m	300	1.0	150C	Si	DO4Ø
137♦	1N3912	300	200n	500m	300	1.0	150C	Si	DO5Ø
138♦	BYW33	300	200n	500m		1.0	175J	Si§	A249k
139♦	BYW73	300	200n	500m		1.0	175J	Si§	A249l
140	SRS330FR	300	200n	500m		1.0	175A	Si	A340b
141	SRS130FR	300	250n	500m		1.0	175A	Si	A340
142	SRS230FR	300	250n	500m		1.0	175A	Si	A340
143	TS30	300	250n	500m		1.0	175A	Si	
144	1SX174	300	350n	500m	30		175A	Si	A1vn
145	BR5D5	300	400n	0.5		1.0	75	Si	A1rx
146▼	1N1125A	300	5.0u	500m	300	1.0	175B	Si	DO4
147▼	1N1187	300	5.0u	500m	300	1.0	190C	Si	DO5
148▼	1N1203A	300	5.0u	500m	300	1.0	150B	Si	DO4
149▼	1N5173	300	5.0u	500m	300	1.0	175A	Si	DO27
150	BYV26B	400	30n	500m	400	1.0	175J	Si	A333c
151▼	SHA396C	400	30n	500m	400	1.0	200J	Si	TO59
152	GI2606	400	35n	0.5		1.0	150S		TO3
153▼	SDR604	400	35n	500m	400	1.0	175J	Si	S324
154▼	SDR624/59	400	35n	500m	400	1.0	200J	Si	TO59
155▼	SDR904	400	35n	500m	400	1.0	200J	Si	S4ad
156▼	SDR934/61	400	35n	500m	400	1.0	200J	Si	TO61
157▼	SHF1104	400	40n	500m	400	1.0	175J	Si	A333j
158▼	SHF1304	400	40n	500m	400	1.0	175J	Si	A333k
159	BYT12-400	400	50n	.50	25		150	Si	DO4
160	SDR1G	400	50n	500m		1.0	175J		DO41
161▼	SDR2G	400	50n	500m	400	1.0	175J	Si	A333j
162▼	SDR3G	400	50n	500m	400	1.0	175A	Si	A313n
163▼	SDR4G	400	50n	500m	400	1.0	175J	Si	A333k
164♦	UES806	400	50n	500m		1.0	150		DO5
165	UES1106	400	50n	500m		1.0	150		A380
166	UES1306	400	50n	500m		1.0	150		A380a
167	UES2606	400	50n	500m		1.0	150		TO3
168▼	SDA356GUF	400	60n	500m	400	1.0	125	Si	M1355
169▼	SDR1305	400	70n	500m	400	1.0	175J	Si	A333k
170▼	SDR504	400	80n	500m	400	1.0	150J	Si	DO5
171▼	SDR944/61	400	80n	500m	400	1.0	200J	Si	TO61
172▼	SDR1004	400	80n	500m	400	1.0	150J	Si	S305
173	S4F	400	100n	500m		1.0	175A	Si	A294h
174▼	SDA356GF	400	100n	500m	400	1.0	125	Si	M1355
175	SRP100G	400	100n	0.5		1.0	125		DO41
176	1N4944GP	400	150n	500m		1.0	175A		DO41
177♦	1N5188	400	150n	500m	400	1	200J	Si	A146e
178	1N5418	400	150n	500m		1.0	175A	Si	A248
179	1N5617	400	150n	500m		1.0	200A	Si	A109c
180	FR104	400	150n	0.5	30		175J	Si	DO41
181	FR304	400	150n	0.5	30		175J	Si	DO27
182	RAB040	400	150n	500m		1.0	175A	Si	A1ez
183	RG1G	400	150n	500m		1.0	175A	Si	A313e
184	RG2G	400	150n	500m		1.0	175	Si	A313e
185	RG4G	400	150n	.5		1.0	175A	Si	A313n
186	RGP10G	400	150n	500m		1.0	175A	Si	DO41
187	RGP15G	400	150n	500m		1.0	175A		DO15
188	RGP20G	400	150n	500m		1.0	175	Si	DO27
189	RGP25G	400	150n	500m		1.0	175	Si	A3ac
190	RGP30G	400	150n	500m		1.0	175A		A3ac
191	RIB040	400	150n	.50		1.0	175J	Si	A1eu
192	S1A4F	400	150n	500m		250m	175A	△	A1ty
193	S3A4F	400	150n	500m		250m	175A	△	A1ey
194	S5A4F	400	150n	500m		1.0	175A	△	A1ey
195	SF4	400	150n	500m		1	175J	Si	A1bs
196	SRP300G	400	150n	500m		1.0	55A		
197	SRP600G	400	150n	0.5		1.0	125		A1eg
198	X04FG	400	150n	500m		1.0	175	Si	A1cz
199	Z04FG	400	150n	500m		1.0	175	Si	A94ab
200	SCSDF4L	400	160n	500m		1.0	150A	Si	M493
201	SCSF4	400	160n	500m		1.0	150A	Si	S305Ø
202	SCSPF4L	400	160n	500m		1.0	150A	Si	M493
203♦	1N3883	400	200n	500m	400	1.0	150C	Si	DO4Ø
204♦	1N3888	400	200n	500m	400	1.0	150C	Si	DO10
205♦	1N3893	400	200n	500m	400	1.0	150C	Si	DO4Ø
206♦	1N3913	400	200n	500m	400	1.0	150C	Si	DO5Ø
207	124	400	200n	500m		1.0	75L		A277k
208	124A	400	200n	500m		1.0	75L	Si	A277k
209	324	400	200n	500m		1.0	75L		A277f
210	324A	400	200n	500m		1.0	75L	Si	A277f
211♦	BYW34	400	200n	500m		1.0	175J	Si§	A249k
212♦	BYW74	400	200n	500m		1.0	175J	Si§	A249l
213	PBR40	400	200n	.50		1.0	125C	Si	20
214	RG3G	400	200n	500m		1.0	175A	Si	A249d
215	SCSNF4L	400	200n	500m		1.0	150A	Si	M493
216	SRS340FR	400	200n	500m		1.0		Si	A340a
217	SRS140FR	400	250n	500m		1.0	175A	Si	A340
218	SRS240FR	400	250n	500m		1.0	175A	Si	A340
219	TS40	400	250n	500m		1.0	175A	Si	
220♦	BYV13	400	300n	500m		1.0	175J	Si§	A249k

SYMBOLS AND CODES EXPLAINED IN INTERPRETER

4. HIGH-SPEED DIODES – Fast Recovery/Switching (Cont'd)

IN ORDER OF: (1) IF TEST (2) PIV (3) trr & (4) & VF & (5) TYPE NUMBER

LINE No.	5 TYPE NO.	2 PIV (V)	RECOVERY TIME 3 trr (s)	TEST CONDITIONS 1 IF (A)	4 VR (V)	IR (A)	MAX. TEMP (°C)	MAT.	DRAWING NO.
1	1SX175	400	350n	500m	30		175A	Si	A1vn
2	BR5E5	400	400n	0.5		1.0	75	Si	A1rx
3	154	400	500n	500m		1.0	75L		A277k
4	154A	400	500n	500m		1.0	75L	Si	A277k
5	354	400	500n	500m		1.0	75L		A277f
6	354A	400	500n	500m		1.0	75L	Si	A277f
7	G1G	400	2.0u	500m		1.0	175A		A313b
8	G2G	400	2.0u	500m		1.0	175A		A94j
9	GP15G	400	2.0u	500m		1.0	175A		DO15
10	GP20G	400	2.5u	500m		1.0	175A		DO27
11	G3G	400	3.0u	500m		1.0	175J		A249d
12	GP30G	400	3.0u	500m		1.0	175A		A3ac
13♦	BYW53	400	4.0u	500m		1.0	175J	Si	A249k
14▼	BYW83	400	4.0u	500m		1.0	175J	Si	A249l
15▼	BYX83	400	4.0u	500m		1.0	175J	Si	A94S
16▼	1N1126A	400	5.0u	500m	400	1.0	175B	Si	DO4
17▼	1N1188	400	5.0u	500m	400	1.0	190C	Si	DO5
18▼	1N1204A	400	5.0u	500m	400	1.0	150B	Si	DO4
19▼	1N4246	400	5.0u	500m	400	1.0	160A	Si	Altc
20▼	1N5060	400	5.0u	500m	400	1.0	160A	Si	Altc
21▼	1N5174	400	5.0u	500m	400	1.0	175A	Si	DO27
22♦	1N5551	400	5.0u	500m	400	1.0	200A	Si	A248a
23♦	1N5616	400	5.0u	500m	400	1.0	200A	Si	A109c
24▼	1N5625	400	5.0u	500m	400	1.0	175A	Si	A249
25▼	SPD547A	400	5.0u	500m	400	1.0	175J	Si	Alce
26▼	SHA396D	500	30n	500m	500	1.0	200J	Si	TO59
27▼	SDR605	500	35n	500m	500	1.0	175J	Si	S324
28▼	SDR625/59	500	35n	500m	500	1.0	200J	Si	TO59
29▼	SDR905	500	35n	500m	500	1.0	200J	Si	S4ad
30▼	SDR935/61	500	35n	500m	500	1.0	200J	Si	TO61
31▼	SHF1105	500	40n	500m	500	1.0	175J	Si	A333j
32▼	SHF1305	500	40n	500m	500	1.0	175J	Si	A333k
33	SUES607	500	50n	0.5		1.0	150J	Si	TO3
34	SUES707	500	50n	0.5		1.0	150J	Si	D04
35	SUES807	500	50n	0.5		1.0	150J	Si	DO5
36	SUES1107	500	50n	0.5		1.0	150J	Si	A298
37	SUES1307	500	50n	0.5		1.0	150	Si	A1ts
38	SUES2607	500	50n	0.5		1.0	150J	Si	TO3
39▼	SDR945/61	500	80n	500m	500	1.0	200J	Si	TO61
40	RG1H	500	150n	500m		1.0	175	Si	A313e
41	RG2H	500	150n	500m		1.0	175	Si	A313e
42	RGP10H	500	150n	500m		1.0		Si	DO41
43	RGP15H	500	150n	500m		1.0	175	Si	DO15
44	RGP20H	500	150n	500m		1.0	175	Si	DO27
45	RGP25H	500	150n	500m		1.0	175	Si	A3ac
46	RGP30H	500	150n	500m		1.0	175	Si	A3ac
47	S1A5F	500	150n	500m		250m	175A	Δ	A1ty
48♦	BYW35	500	200n	500m		1.0	175J	Si§	A249k
49♦	BYW75	500	200n	500m		1.0	175J	Si§	A249l
50	SRS350FR	500	200n	500m		1.0	175A	Si	A340b
51	1N5419	500	250n	500m		1.0	175A	Si	A248
52	S3A5F	500	250n	500m		250m	175A	Δ	A1ey
53	S5A5F	500	250n	500m		1.0	175A	Δ	A1ey
54	SRS150FR	500	250n	500m		1.0	175A	Si	A340
55	SRS250FR	500	250n	500m		1.0	175A	Si	A340
56	TS50	500	250n	500m		1.0	175A	Si	
57	BR5F5	500	400n	0.5		1.0	75	Si	A1rx
58▼	1N1127A	500	5.0u	500m	500	1.0	175B	Si	DO4
59▼	1N1189	500	5.0u	500m	500	1.0	190C	Si	DO5
60▼	1N1205A	500	5.0u	500m	500	1.0	150B	Si	DO4
61▼	1N5175	500	5.0u	500m	500	1.0	175A	Si	DO27
62	BYV26C	600	30n	500m	600	1.0	175J	Si	A333c
63▼	SDR606	600	35n	500m	600	1.0	175J	Si	S324
64▼	SDR936/61	600	35n	500m	600	1.0	200J	Si	TO61
65▼	SHF1106	600	40n	500m	600	1.0	175J	Si	A333j
66▼	SHF1306	600	40n	500m	600	1.0	175J	Si	A333k
67	SDR1J	600	50n	500m		1.0	175J		DO41
68▼	SDR2J	600	50n	500m	600	1.0	175J	Si	A333j
69▼	SDR3J	600	50n	500m	600	1.0	175A	Si	A313n
70▼	SDR4J	600	50n	500m	600	1.0	175J	Si	A333k
71	SUES608	600	50n	0.5		1.0	150J	Si	TO3
72	SUES708	600	50n	0.5		1.0	150J	Si	DO4
73	SUES808	600	50n	0.5		1.0	150J	Si	DO5
74	SUES1108	600	50n	0.5		1.0	150J	Si	A298
75	SUES1308	600	50n	0.5		1.0	150	Si	A1ts
76	SUES2608	600	50n	0.5		1.0	150J	Si	TO3
77▼	SDA356JUF	600	60n	500m	600	1.0	125	Si	M1355
78▼	SDR1306	600	70n	500m	600	1.0	175J	Si	A333k
79▼	SDR506	600	80n	500m	600	1.0	150J	Si	DO5
80▼	SDR946/61	600	80n	500m	600	1.0	200J	Si	TO61
81▼	SDR1006	600	80n	500m	600	1.0	150J	Si	S305
82	BYT11-600	600	100n	0.5	25	1.0	150J	#	DO14
83▼	SDA356JF	600	100n	500m	600	1.0	125	Si	M1355
84♦	1N5190	600	150n	500m	600	1	200J	Si	A146e
85	BYT13-600	600	150n	0.5	25	1.0	150J	#	A69ai
86	RAB060	600	150n	500m		1.0	175A	Si	A1ez
87	RG1J	600	150n	500m		1.0	175A	Si	A313e
88	RG2J	600	150n	500m		1.0	175	Si	A313e
89	RGP10J	600	150n	500m		1.0	175A	Si	DO41
90	RGP15J	600	150n	500m		1.0	175A		DO15
91	RIB060	600	150n	.50		1.0	175J	Si	A1eu
92	X06FG	600	150n	500m		1.0	175	Si	A1cz
93	Z06FG	600	150n	500m		1.0	175	Si	A94ab
94	126	600	200n	500m		1.0	75L		A277k
95	126A	600	200n	500m		1.0	75L	Si	A277k
96	326	600	200n	500m		1.0	75L		A277f
97	326A	600	200n	500m		1.0	75L	Si	A277f
98♦	BYW36	600	200n	500m		1.0	175J	Si§	A249k
99♦	BYW76	600	200n	500m		1.0	175J	Si§	A249l
100	PBR60	600	200n	.50		1.0	125C	Si	20
101	RG3J	600	200n	500m		1.0	175A	Si	A249d
102	S1A6F	600	200n	500m		250m	175A	Δ	A1ty
103	SRP100J	600	200n	0.5		1.0	125		DO41
104	SRP300J	600	200n	500m		1.0	55A		
105	SRP600J	600	200n	0.5		1.0	125		A1eg
106	SRS360FR	600	200n	500m		1.0		Si	A340a
107	1N5619	600	250n	500m		1.0	200A	Si	A109c
108	FR105	600	250n	0.5	30		175J	Si	DO41
109	FR305	600	250n	0.5	30		175J	Si	DO27
110♦	GS63	600	250n	500m		1.0	150J	Si	A2hg

LINE No.	5 TYPE NO.	2 PIV (V)	RECOVERY TIME 3 trr (s)	TEST CONDITIONS 1 IF (A)	4 VR (V)	IR (A)	MAX. TEMP (°C)	MAT.	DRAWING NO.
111	RG4J	600	250n	.5		1.0	175A	Si	A313n
112	RGP20J	600	250n	500m		1.0	175	Si	DO27
113	RGP25J	600	250n	500m		1.0	175	Si	A3ac
114	RGP30J	600	250n	500m		1.0	175A		A3ac
115	SRS160FR	600	250n	500m		1.0	175A	Si	A340
116	SRS260FR	600	250n	500m		1.0	175A	Si	A340
117	TS60	600	250n	500m		1.0	175A	Si	
118♦	BYV14	600	300n	500m		1.0	175J	Si§	A249k
119	S3A6F	600	300n	500m		250m	175A	Δ	A1ey
120	S5A6F	600	300n	500m		1.0	175A	Δ	A1ey
121	1N5420	600	400n	500m		1.0	175A	Si	A248
122	BR5G5	600	400n	0.5		1.0	75	Si	A1rx
123	156	600	500n	500m		1.0	75L		A277k
124	156A	600	500n	500m		1.0	75L	Si	A277k
125	356	600	500n	500m		1.0	75L		A277f
126	356A	600	500n	500m		1.0	75L	Si	A277f
127	3SM6	600	2.0u	500m		1.0	175A	Si	A294g
128	G1J	600	2.0u	500m		1.0	175A		A313b
129	G2J	600	2.0u	500m		1.0	175A		A94j
130	GP15J	600	2.0u	500m		1.0	175A		DO15
131	S6M	600	2.0u	500m		1.0	175A	Si	A294h
132	SCSPM6L	600	2.0u	500m		1.0	150A	Si	M493
133	SCSPM6W	600	2.0u	500m		1.0	150A	Si	M492
134	GP20J	600	2.5u	500m		1.0	175A		DO27
135	G3J	600	3.0u	500m		1.0	175J		A249d
136	GP30J	600	3.0u	500m		1.0	175A		A3ac
137▼	BYW54	600	4.0u	500m		1.0	175J	Si	A249k
138▼	BYW84	600	4.0u	500m		1.0	175J	Si	A249l
139▼	BYX84	600	4.0u	500m		1.0	175J	Si	A94S
140▼	1N1128A	600	5.0u	500m	600	1.0	175B	Si	DO4
141▼	1N1190	600	5.0u	500m	600	1.0	190C	Si	DO5
142▼	1N1206A	600	5.0u	500m	600	1.0	150B	Si	DO4
143▼	1N4247	600	5.0u	500m	600	1.0	160A	Si	Altc
144▼	1N5061	600	5.0u	500m	600	1.0	160A	Si	Altc
145♦	1N5552	600	5.0u	500m	600	1.0	200A	Si	A248a
146♦	1N5618	600	5.0u	500m	600	1.0	200A	Si	A109c
147▼	1N5626	600	5.0u	500m	600	1.0	175A	Si	A249
148▼	SPD548A	600	5.0u	500m	600	1.0	175J	Si	Alce
149	SUES609	700	50n	0.5		1.0	150J	Si	TO3
150	SUES709	700	50n	0.5		1.0	150J	Si	DO4
151	SUES809	700	50n	0.5		1.0	150J	Si	DO5
152	SUES1109	700	50n	0.5		1.0	150J	Si	A298
153	SUES1309	700	50n	0.5		1.0	150	Si	A1ts
154	SUES2609	700	50n	0.5		1.0	150J	Si	TO3
155	BR5H5	700	400n	0.5		1.0	75	Si	A1rx
156▼	1N3670A	700	5.0u	500m	700	1.0	200A	Si	DO4
157▼	1N3765	700	5.0u	500m	700	1.0	190C	Si	DO5
158	SUES610	800	50n	0.5		1.0	150J	Si	TO3
159	SUES710	800	50n	0.5		1.0	150J	Si	DO4
160	SUES810	800	50n	0.5		1.0	150J	Si	DO5
161	SUES1110	800	50n	0.5		1.0	150J	Si	A298
162	SUES1310	800	50n	0.5		1.0	150	Si	A1ts
163	SUES2610	800	50n	0.5		1.0	150J	Si	TO3
164▼	SDA356KUF	800	60n	500m	800	1.0	125	Si	M1355
165	SDR1K	800	60n	500m		1.0	175J		DO41
166▼	SDR2K	800	60n	500m	800	1.0	175J	Si	A333j
167▼	SDR3K	800	60n	500m	800	1.0	175A	Si	A313n
168▼	SDR4K	800	60n	500m	800	1.0	175J	Si	A333k
169▼	SDR1308	800	70n	500m	800	1.0	175J	Si	A333k
170▼	SDR508	800	80n	500m	800	1.0	150J	Si	DO5
171▼	SDR1008	800	80n	500m	800	1.0	150J	Si	S305
172♦	BYT11-800	800	100n	0.5	25	1.0	150J	#	DO14
173▼	SDA356KF	800	100n	500m	800	1.0	125	Si	M1355
174	BYT13-800	800	150n	0.5	25	1.0	150J	#	A69ai
175	RGP10K	800	150n	500m		1.0	175A		DO41
176	RGP15K	800	150n	500m		1.0	175A		DO15
177	X08FG	800	150n	500m		1.0	175	Si	A1cz
178	Z08FG	800	150n	500m		1.0	175	Si	A94ab
179▼	BYT77	800	200n	500m		1.0	175J	Si	A333e
180▼	BYV37	800	200n	500m		1.0	175J	Si	A249a
181	SRP100K	800	200n	0.5		1.0	125		DO41
182	SRP300K	800	200n	500m		1.0	55A		
183	SRP600K	800	200n	0.5		1.0	125		A1eg
184♦	GS83	800	250n	500m		1.0	150J	Si	A2hg
185	RAB080	800	250n	500m		1.0	175A	Si	A1ez
186	RG1K	800	250n	500m		1.0	175A	Si	A313e
187	RG2K	800	250n	500m		1.0	175	Si	A313e
188	RIB080	800	250n	.50		1.0	175J	Si	A1eu
189	SRS180FR	800	250n	500m		1.0	175A	Si	A340
190	SRS280FR	800	250n	500m		1.0	175A	Si	A340
191	1N5621	800	300n	500m		1.0	200A	Si	A109c
192♦	BYV15	800	300n	500m		1.0	175J	Si§	A249k
193	S1A8F	800	300n	500m		250m	175A	Δ	A1ty
194	S5A8F	800	350n	500m		1.0	175A	Δ	A1ey
195	BR5K5	800	400n	0.5		1.0	75	Si	A1rx
196	RG3K	800	400n	500m		1.0	175A	Si	A249d
197	FR106	800	500n	0.5	30		175J	Si	DO41
198	FR306	800	500n	0.5	30		175J	Si	DO27
199	PR1006	800	500n	0.5		1.0	150J	Si	DO41
200▼	PR3006	800	500n	500m	800	1.0	175J	Si	DO27
201	RG4K	800	500n	.5		1.0	175A	Si	A313n
202	RGP20K	800	500n	500m		1.0	175	Si	DO27
203	RGP25K	800	500n	500m		1.0	175	Si	A3ac
204	RGP30K	800	500n	500m		1.0	175A		A3ac
205	TS80	800	500n	500m		1.0	175A	Si	
206	3SM8	800	2.0u	500m		1.0	175A	Si	A294g
207	G1K	800	2.0u	500m		1.0	175A		A313b
208	G2K	800	2.0u	500m		1.0	175A		A94j
209	GP15K	800	2.0u	500m		1.0	175A		DO15
210	S8M	800	2.0u	500m		1.0	175A	Si	A294h
211	GP20K	800	2.5u	500m		1.0	175A		DO27
212	G3K	800	3.0u	500m		1.0	175J		A249d
213	GP30K	800	3.0u	500m		1.0	175A		A3ac
214▼	BYW55	800	4.0u	500m		1.0	175J	Si	A249k
215▼	BYW85	800	4.0u	500m		1.0	175J	Si	A249l
216▼	BYX85	800	4.0u	500m		1.0	175J	Si	A94S
217▼	1N3671A	800	5.0u	500m	800	1.0	200A	Si	DO4
218▼	1N3766	800	5.0u	500m	800	1.0	190C	Si	DO5
219▼	1N4248	800	5.0u	500m	800	1.0	160A	Si	Altc
220▼	1N4250	800	5.0u	500m	800	1.0	175A	Si	Aleh

SYMBOLS AND CODES EXPLAINED IN INTERPRETER

4. HIGH-SPEED DIODES - Fast Recovery/Switching (Cont'd)

IN ORDER OF: (1) IF TEST (2) PIV (3) trr & (4) & VF & (5) TYPE NUMBER

LINE No.	5 TYPE NO.	2 PIV (V)	RECOVERY TIME 3 trr (s)	TEST CONDITIONS 1 IF (A)	4 VR (V)	IR (A)	MAX. TEMP (°C)	MAT.	DRAWING NO.
1▼	1N5062	800	5.0u	500m	800	1.0	160A	Si	Altc
2▼	1N5177	800	5.0u	500m	800	1.0	175A	Si	DO27
3♦	1N5553	800	5.0u	500m	800	1.0	200A	Si	A248a
4♦	1N5620	800	5.0u	500m	800	1.0	200A	Si	A109c
5▼	1N5627	800	5.0u	500m	800	1.0	175A	Si	A249
6▼	SPD549A	800	5.0u	500m	800	1.0	175J	Si	Alce
7♦	S3A8F	800	250	500m		250m	175A	Δ	A1ey
8▼	1N3672A	900	5.0u	500m	900	1.0	200A	Si	DO4
9▼	1N3767	900	5.0u	500m	900	1.0	190C	Si	DO5
10	SUES611	1.0k	50n	0.5		1.0	150J	Si	TO3
11	SUES711	1.0k	50n	0.5		1.0	150J	Si	DO4
12	SUES811	1.0k	50n	0.5		1.0	150J	Si	DO5
13	SUES1111	1.0k	50n	0.5		1.0	150J	Si	A298
14	SUES1311	1.0k	50n	0.5		1.0	150	Si	A1ts
15	SUES2611	1.0k	50n	0.5		1.0	150J	Si	TO3
16▼	SHE10UF	1.0k	60n	500m	1.0k	1.0	175	Si	A298as
17▼	SHM10UF	1.0k	60n	500m	1.0k	1.0	175	Si	A298at
18▼	SDA356MUF	1.0k	70n	500m	1.0k	1.0	125	Si	M1355
19	SDR1M	1.0k	70n	500m		1.0	175J		DO41
20▼	SDR2M	1.0k	70n	500m	1.0u	1.0	175J	Si	A333j
21▼	SDR3M	1.0k	70n	500m	1.0k	1.0	175A	Si	A313n
22▼	SDR4M	1.0k	70n	500m	1.0k	1.0	175J	Si	A333k
23▼	SDR510	1.0k	80n	500m	1.0k	1.0	150J	Si	DO5
24▼	SDR1010	1.0k	80n	500m	1.0k	1.0	150J	Si	S305
25	BYT11-1000	1000	100n	0.5	25	1.0	150J	#	DO14
26▼	SDA356MF	1.0k	100n	500m	1.0k	1.0	125	Si	M1355
27	BYT13-1000	1000	150n	0.5	25	1.0	150J	#	A69ai
28	RGP10M	1.0k	150n	500m		1.0	175A		DO41
29	RGP15M	1.0k	150n	500m		1.0	175A		DO15
30▼	SHE10F	1.0k	150n	500m	1.0k	1.0	175	Si	A298as
31▼	SHM10F	1.0k	150n	500m	1.0k	1.0	175	Si	A298at
32	X10FG	1.0k	150n	500m		1.0	175	Si	A1cz
33	Z10FG	1.0k	150n	500m		1.0	175	Si	A94ab
34♦	BYT78	1.0k	200n	500m		1.0	175J	Si	A333e
35▼	BYV38	1.0k	200n	500m		1.0	175J	Si	A249a
36	RAB100	1.0k	250n	500m		1.0	175A	Si	A1ez
37	RGP15-10	1.0k	250n	500m		1.0	175J	Si	DO15
38	RIB100	1.0k	250n	.50		1.0	175J	Si	A1eu
39	SRS1100FR	1.0k	250n	500m		1.0		Si	A340
40	SRS2100FR	1.0k	250n	500m		1.0		Si	A340
41♦	BYV16	1.0k	300n	500m		1.0	175J	Si§	A249k
42	BR5M5	1.0k	400n	0.5		1.0	75	Si	A1rx
43	S1A10F	1.0k	400n	500m		250m	175A	Δ	A1ty
44	S3A10F	1.0k	400n	500m		250m	175A	Δ	A1ey
45	S5A10F	1.0k	400n	500m		1.0	175A	Δ	A1ey
46	1N5623	1.0k	500n	500m		1.0	200A	Si	A109c
47	FR107	1.0k	500n	0.5	30		175J	Si	DO41
48	FR307	1.0k	500n	0.5	30		175J	Si	DO27
49♦	GS103	1.0k	500n	500m		1.0	175J	Si	A2hg
50	PR1007	1.0k	500n	0.5		1.0	150J	Si	DO41
51	RG1M	1.0k	500n	500m		1.0	175A	Si	A313e
52	RG2M	1.0k	500n	500m		1.0	175	Si	A313e
53	RG3M	1.0k	500n	500m		1.0	175A	Si	A249d
54	RG4M	1.0k	500n	.5		1.0	175A	Si	A313n
55	RGP20M	1.0k	500n	500m		1.0	175	Si	DO27
56	RGP25M	1.0k	500n	500m		1.0	175	Si	A3ac
57	RGP30M	1.0k	500n	500m		1.0	175A		A3ac
58	SF10	1.0k	500n	500m		1.0	175J	Si	A1bs
59	3SM0	1.0k	2.0u	500m		1.0	175A	Si	A294g
60	G1M	1.0k	2.0u	500m		1.0	175A		A313b
61	G2M	1.0k	2.0u	500m		1.0	175A		A94j
62	GP15M	1.0k	2.0u	500m		1.0	175A		DO15
63	S0M	1.0k	2.0u	500m		1.0	175A	Si	A294h
64	GP20M	1.0k	2.5u	500m		1.0	175A		DO27
65	G3M	1.0k	3.0u	500m		1.0	175J		A249d
66	GP30M	1.0k	3.0u	500m		1.0	175A		A3ac
67▼	BYW56	1.0k	4.0u	500m		1.0	175J	Si	A249k
68▼	BYW86	1.0k	4.0u	500m		1.0	175J	Si	A249l
69▼	BYX86	1.0k	4.0u	500m		1.0	175J	Si	A94s
70▼	1N3643	1.0k	5.0u	500m	1.0k	1.0	200S	Si	A83a
71▼	1N3673A	1.0k	5.0u	500m	1.0k	1.0	200A	Si	DO4
72▼	1N3768	1.0k	5.0u	500m	1.0k	1.0	190C	Si	DO5
73▼	1N4249	1.0k	5.0u	500m	1.0k	1.0	160A	Si	Altc
74▼	1N4251	1.0k	5.0u	500m	1.0k	1.0	175A	Si	Albh
75▼	1N5178	1.0k	5.0u	500m	1.0k	1.0	175A	Si	DO27
76♦	1N5554	1.0k	5.0u	500m	1.0k	1.0	200A	Si	A248a
77♦	1N5622	1.0k	5.0u	500m	1.0k	1.0	200A	Si	A109c
78▼	SHE10	1.0k	5.0u	500m	1.0k	1.0	175	Si	A298as
79▼	SHM10	1.0k	5.0u	500m	1.0k	1.0	175	Si	A298at
80▼	SPD550A	1.0k	5.0u	500m	1.0k	1.0	175J	Si	Alce
81▼	SPD5063	1.0k	5.0u	500m	1.0k	1.0	160A	Si	Altc
82▼	SPD5628	1.0k	5.0u	500m	1.0k	1.0	175A	Si	A249
83▼	SDA356NUF	1.2k	70n	500m	1.2k	1.0	125	Si	M1355
84▼	SDR1N	1.2k	80n	500m	1.2k	1.0	175J	Si	A333j
85▼	SDR2N	1.2k	80n	500m	1.2k	1.0	175J	Si	A333j
86▼	SDR4N	1.2k	80n	500m	1.2k	1.0	175J	Si	A333k
87▼	SDA356NF	1.2k	100n	500m	1.2k	1.0	125	Si	M1355
88	RGP15-12	1.2k	250n	500m		1.0	175J	Si	DO15
89▼	BY203/12S	1.2k	300n	500m		1.0	150J	Si	A94g
90	BR5N5	1.2k	400n	0.5		1.0	75	Si	A1rx
91	R1200F	1.2k	500n	0.5		1.0	175S		DO41
92	S1A12F	1.2k	500n	500m		250m			A1ty
93	S3A12F	1.2k	500n	500m		250m			A1ey
94	S5A12F	1.2k	500n	500m		1.0			A1ey
95▼	1N4252	1.2k	5.0u	500m	1.2k	1.0	175A	Si	Aleh
96▼	1N5331	1.2k	5.0u	500m	1.2k	1.0	200C	Si	DO4
97▼	SDR1P	1.3k	65n	500m	1.3k	1.0	175J	Si	A333j
98♦	DG1	1.4k	20n	500m		50	175A	Si	A313b
99▼	SDR1R	1.4k	65n	500m	1.4k	1.0	175J	Si	A333j
100	RGP15-14	1.4k	250n	500m		1.0	175J	Si	DO15
101	CG1	1.4k	15u	500m		50m	175	Si	E204p
102	CG2	1.4k	15u	500m		50m	175	Si	E204p
103♦	DG2	1.4k	20u	500m		50m	175A	Si	A313b
104♦	DG3	1.4k	20u	500m		50	175A	Si	A249d
105▼	SAM15UF	1.5k	60n	500m	1.5k	1.0	175J	SI	A333g
106▼	SHE15UF	1.5k	60n	500m	1.5k	1.0	150	Si	E201d
107▼	SDR1S	1.5k	65n	500m	1.5k	1.0	175J	Si	A333j
108	Z15UFG	1.5k	100n	500m		1.0	175	Si	A94AC
109▼	SAM15F	1.5k	150n	500m	1.5k	1.0	175J	SI	A333g
110▼	SHE15F	1.5k	150n	500m	1.5k	1.0	150	Si	E201d
111	HV15F	1.5k	200n	500m		1.0	100A	Si*Δ	A1ty
112	Z15FG	1.5k	200n	500m		1.0	175	Si	A94ac
113	RGP15-15	1.5k	250n	500m		1.0	175J	Si	DO15
114	BR5P5	1.5k	400n	0.5		1.0	75	Si	A1rx
115	R1500F	1.5k	500n	0.5		1.0	175S		DO41
116	Z15SG	1.5k	3.0u	500m		1.0	175	Si	A94AC
117▼	1N3644	1.5k	5.0u	500m	1.5k	1.0	200S	Si	A83a
118▼	1N4253	1.5k	5.0u	500m	1.5k	1.0	175A	Si	Aleh
119▼	1N4254	1.5k	5.0u	500m	1.5k	1.0	175A	Si	Aleh
120▼	SAM15	1.5k	5.0u	500m	1.5k	1.0	175J	SI	A333g
121▼	SHE15	1.5k	5.0u	500m	1.5k	1.0m	150	Si	E201d
122▼	SDR1T	1.6k	65n	500m	1.6k	1.0	175J	Si	A333j
123	RF160A	1.6k	200n	500m			150A	Si	A3c
124	RF160B	1.6k	250n	500m			150A	Si	A3c
125	RGP15-16	1.6k	250n	500m		1.0	175J	Si	DO15
126▼	BY203/16S	1.6k	300n	500m		1.0	150J	Si	A94g
127▼	SDR1V	1.7k	65n	500m	1.7k	1.0	175J	Si	A333j
128▼	SDR1W	1.8k	65n	500m	1.8k	1.0	175J	Si	A333j
129	RGP15-18	1.8k	250n	500m		1.0	175J	Si	DO15
130	R1800F	1.8k	500n	0.5		1.0	175S		DO41
131▼	SAM20UF	2.0k	60n	500m	2.0k	1.0	175J	SI	A333g
132▼	SHE20UF	2.0k	60n	500m	2.0k	1.0	150	Si	E201d
133	Z20UFG	2.0k	100n	500m		1.0	175	Si	A94AC
134▼	SAM20F	2.0k	150n	500m	2.0k	1.0	175J	SI	A333g
135▼	SHE20F	2.0k	150n	500m	2.0k	1.0	150	Si	E201d
136	HV20F	2.0k	200n	500m		1.0	100A	Si*Δ	A1ty
137	RF200A	2.0k	200n	500m			150A	Si	A3c
138	Z20FG	2.0k	200n	500m		1.0	175	Si	A94AC
139	RF200B	2.0k	250n	500m			150A	Si	A3c
140	RGP15-20	2.0k	250n	500m		1.0	175J	Si	DO15
141▼	SHG2F	2.0k	250n	500m	2.0k	1.0	200	Si	DO41
142▼	BY203/20S	2.0k	300n	500m		1.0	150J	Si	A94g
143	R2000F	2.0k	500n	0.5		1.0	175S		DO41
144	Z20SG	2.0k	3.0u	500m		1.0	175	Si	A94AC
145▼	1N3645	2.0k	5.0u	500m	2.0k	1.0	200S	Si	A83a
146▼	1N4255	2.0k	5.0u	500m	2.0k	1.0	175A	Si	Aleh
147▼	SAM20	2.0k	5.0u	500m	2.0k	1.0	175J	SI	A333g
148▼	SHE20	2.0k	5.0u	500m	2.0k	1.0	150	Si	E201d
149▼	SHG2	2.0k	5.0u	500m	2.0k	1.0	175	Si	DO41
150▼	SAM25UF	2.5k	60n	500m	2.5k	1.0	175J	SI	A333g
151▼	SDAH2500UF	2.5k	60n	500m	2.5k	1.0	175	Si	A452
152▼	SHE25UF	2.5k	60n	500m	2.5k	1.0	150	Si	E201d
153	Z25UFG	2.5k	100n	500m		1.0	175	Si	A94AC
154	S3HVM2.5F	2.5k	150n	500m		1.0	150S	Si	S416
155▼	SAM25F	2.5k	150n	500m	2.5k	1.0	175J	SI	A333g
156	SCFS2500	2.5k	150n	500m		1.0	175A	Si	A138w
157▼	SDA2500F	2.5k	150n	500m	2.5k	1.0	175A	Si	A394
158▼	SDAH2500F	2.5k	150n	500m	2.5k	1.0	175	Si	A452
159▼	SHE25F	2.5k	150n	500m	2.5k	1.0	150	Si	E201d
160	SSCF2500	2.5k	150n	500m		1.0	150		A449
161	Z25FG	2.5k	200n	500m		1.0	175	Si	A94AC
162	S2HVM2.5F	2.5k	250n	500m		1.0	150S	Si	S416
163	R2500F	2.5k	500n	0.5		1.0	175S		DO41
164	Z25SG	2.5k	3.0u	500m		1.0	175	Si	A94AC
165▼	1N3646	2.5k	5.0u	500m	2.5k	1.0	200S	Si	A83a
166▼	1N4256	2.5k	5.0u	500m	2.5k	1.0	175A	Si	Aleh
167▼	SAM25	2.5k	5.0u	500m	2.5k	1.0	175J	SI	A333g
168▼	SDAH2500	2.5k	5.0u	500m	2.5k	1.0	150A	Si	A440
169▼	SHE25	2.5k	5.0u	500m	2.5k	1.0	150	Si	E201d
170▼	SAM30UF	3.0k	60n	500m	3.0k	1.0	175J	SI	A333g
171▼	SHE30UF	3.0k	60n	500m	3.0k	1.0	150	Si	E201d
172	Z30UFG	3.0k	100n	500m		1.0	175	Si	A94AC
173▼	SAM30F	3.0k	150n	500m	3.0k	1.0	175J	SI	A333g
174▼	SAM60F	3.0k	150n	500m	6.0k	1.0	175J	SI	A313p
175▼	SHE30F	3.0k	150n	500m	3.0k	1.0	150	Si	E201d
176	HVC30F	3.0k	200n	500m		1.0	100A	Si*Δ	A1ey
177	Z30FG	3.0k	200n	500m		1.0	175	Si	A94AC
178▼	SHG3F	3.0k	250n	500m	3.0k	1.0	200	Si	DO41
179	SODSLD3FS	3.0k	300n	500m		1.0	150A		M948
180	R3000F	3.0k	500n	0.5		1.0	175S		DO41
181	Z30SG	3.0k	3.0u	500m		1.0	175	Si	A94AC
182▼	1N3647	3.0k	5.0u	500m	3.0k	1.0	200S	Si	A83a
183▼	1N3764	3.0k	5.0u	500m	3.0k	1.0	200S	Si	A83aq
184▼	1N4257	3.0k	5.0u	500m	3.0k	1.0	175A	Si	Aleh
185▼	SAM30	3.0k	5.0u	500m	3.0k	1.0	175J	SI	A333g
186▼	SHE30	3.0k	5.0u	500m	3.0k	1.0	150	Si	E201d
187▼	SHG3	3.0k	5.0u	500m	3.0k	1.0	200	Si	DO41
188▼	SAM35UF	3.5k	60n	500m	3.5k	1.0	175J	SI	A333g
189▼	SAM35F	3.5k	150n	500m	3.5k	1.0	175J	SI	A333g
190▼	SAM35	3.5k	5.0u	500m	3.5k	1.0	175J	SI	A333g
191▼	SAM40UF	4.0k	60n	500m	4.0k	1.0	175J	SI	A333g
192▼	SHE40UF	4.0k	60n	500m	4.0k	1.0	150	Si	E201d
193	SSCHE4000	4.0k	70n	500m		1.0	150	Si	A449
194	Z40UFG	4.0k	100n	500m		1.0	175	Si	A94AC
195▼	SAM40F	4.0k	150n	500m	4.0k	1.0	175J	SI	A333g
196▼	SHE40F	4.0k	150n	500m	4.0k	1.0	150	Si	E201d
197	HVC40F	4.0k	200n	500m		1.0	100A	Si*Δ	A1ey
198	Z40FG	4.0k	200n	500m		1.0	175	Si	A94AC
199▼	SHG4F	4.0k	250n	500m	4.0k	1.0	200	Si	DO41
200	SODSLD4FS	4.0k	300n	500m		1.0	150A		M948a
201	Z40SG	4.0k	3.0u	500m		1.0	175	Si	A94AC
202▼	1N5181	4.0k	5.0u	500m	4.0k	1.0	175J	Si	Alfj
203▼	SAM40	4.0k	5.0u	500m	4.0k	1.0	175J	SI	A333g
204▼	SHE40	4.0k	5.0u	500m	4.0k	1.0	150	Si	E201d
205▼	SHG4	4.0k	5.0u	500m	4.0k	1.0	200	Si	DO41
206▼	SDAH5000UF	5.0k	60n	500m	5.0k	1.0	175	Si	A452a
207▼	SHE50UF	5.0k	60n	500m	5.0k	1.0	150	Si	E201d
208	Z50UFG	5.0k	100n	500m		1.0	175	Si	A94AC
209	S3HVM5F	5.0k	150n	500m		1.0	150S	Si	S416
210	SCF5000	5.0k	150n	500m		1.0	175	Si	A138g
211▼	SDA5000F	5.0k	150n	500m	5.0k	1.0	175A	Si	A394b
212▼	SDAH5000F	5.0k	150n	500m	5.0k	1.0	175	Si	A452a
213▼	SHE50F	5.0k	150n	500m	5.0k	1.0	150	Si	E201d
214	SSCF5000	5.0k	150n	500m		1.0	150		A449b
215	HVC50F	5.0k	200n	500m		1.0	100A	Si*Δ	A1ey
216	Z50FG	5.0k	200n	500m		1.0	175	Si	A94AC
217	S2HVM5F	5.0k	250n	500m		1.0	150S	Si	S416
218▼	SHG5F	5.0k	250n	500m	5.0k	1.0	200	Si	DO41
219	SODSLD5FS	5.0k	300n	500m		1.0	150A		M948b
220	R5000F	5.0k	500n	0.5		1.0	175S		DO41

SYMBOLS AND CODES EXPLAINED IN INTERPRETER

4. HIGH-SPEED DIODES – Fast Recovery/Switching (Cont'd)

IN ORDER OF: (1) IF TEST (2) PIV
(3) trr & (4) & VF & (5) TYPE NUMBER

LINE No.	5 TYPE NO.	2 PIV (V)	3 RECOVERY TIME trr (s)	TEST CONDITIONS 1 IF (A)	4 VR (V)	IR (A)	MAX. TEMP (°C)	MAT.	DRAWING NO.
1	Z50SG	5.0k	3.0u	500m		1.0	175	Si	A94AC
2▼	1N5182	5.0k	5.0u	500m	5.0k	1.0	175J	Si	Alfj
3▼	SDA5000	5.0k	5.0u	500m	5.0k	1.0	175A	Si	A394
4▼	SDAH5000	5.0k	5.0u	500m	5.0k	1.0	150A	Si	A440a
5▼	SHE50	5.0k	5.0u	500m	5.0k	1.0	150	Si	E201d
6▼	SHG5	5.0k	5.0u	500m	5.0k	1.0	200	Si	DO41
7▼	SAM60UF	6.0k	60n	500m	6.0k	1.0	175	Si	A313p
8▼	SHE60UF	6.0k	60n	500m	6.0k	1.0	150	Si	E201d
9	SSCHE6000	6.0k	70n	500m		1.0	150	Si	A449a
10	Z60UFG	6.0k	100n	500m		1.0	175	Si	A94AC
11▼	SHE60F	6.0k	150n	500m	6.0k	1.0	150	Si	E201d
12	HVC60F	6.0k	200n	500m		1.0	100A	Si*Δ	A1ey
13	Z60FG	6.0k	200n	500m		1.0	175	Si	A94AC
14▼	SDR047-01	6.0k	250n	500m	6.0k	1.0	150J	Si	E201d
15▼	SHG6F	6.0k	250n	500m	6.0k	1.0	200	Si	DO41
16	SODSLD6FS	6.0k	300n	500m		1.0	150A		M948c
17	Z60SG	6.0k	3.0u	500m		1.0	175	Si	A94AC
18▼	SHE60	6.0k	5.0u	500m	6.0k	1.0	150	Si	E201d
19▼	SHG6	6.0k	5.0u	500m	6.0k	1.0	200	Si	DO41
20▼	SAM70UF	7.0k	60n	500m	7.0k	1.0	175	Si	A313p
21▼	SAM70F	7.0k	150n	500m	7.0k	1.0	175	Si	A313p
22	SODSLD7FS	7.0k	300n	500m		1.0	150A		M948d
23▼	SDAH7500UF	7.5k	60n	500m	7.5k	1.0	175	Si	A452b
24	SCF7500	7.5k	150n	500m		1.0	175	Si	A138m
25▼	SDA7500F	7.5k	150n	500m	7.5k	1.0	175A	Si	A394d
26▼	SDAH7500F	7.5k	150n	500m	7.5k	1.0	175	Si	A452b
27	SSCF7500	7.5k	150n	500m		1.0	150		A449d
28	S2HVM7.5F	7.5k	250n	500m		1.0	150S	Si	S416
29▼	SDA7500	7.5k	5.0u	500m	7.5k	1.0	175A	Si	A394a
30▼	SDAH7500	7.5k	5.0u	500m	7.5k	1.0	150A	Si	A440b
31▼	SAM80UF	8.0k	60n	500m	8.0k	1.0	175	Si	A313p
32▼	SHE80UF	8.0k	60n	500m	8.0k	1.0	150	Si	E201d
33	SSCHE8000	8.0k	70n	500m		1.0	150	Si	A449b
34	Z80UFG	8.0k	100n	500m		1.0	175	Si	A94AC
35▼	SAM80F	8.0k	150n	500m	8.0k	1.0	175	Si	A313p
36▼	SHE80F	8.0k	150n	500m	8.0k	1.0	150	Si	E201d
37	Z80FG	8.0k	200n	500m		1.0	175	Si	A94AC
38	SODSLD8FS	8.0k	300n	500m		1.0	150A		M948e
39	BYX90G	8.0k	350n	500m		250m	150J	Si	A333f
40	Z80SG	8.0k	3.0u	500m		1.0	175	Si	A94AC
41▼	SHE80	8.0k	5.0u	500m	8.0k	1.0	150	Si	E201d
42▼	SAM90UF	9.0k	60n	500m	9.0k	1.0	175	Si	A313p
43▼	SAM90F	9.0k	150n	500m	9.0k	1.0	175	Si	A313p
44	SODSLD9FS	9.0k	300n	500m		1.0	150A		M948f
45▼	SDA10000UF	10k	60n	500m	10k	1.0	175	Si	A449e
46▼	SDAH10000UF	10k	60n	500m	10k	1.0	175	Si	A452c
47▼	SHE100UF	10k	60n	500m	10k	1.0	150	Si	E201d
48	SSCHE10000	10k	70n	500m		1.0	150	Si	A449c
49	Z100UFG	10k	100n	500m		1.0	175	Si	A94AC
50	SCF10000	10k	150n	500m		1.0	175	Si	A138q
51	SCFS10000	10k	150n	500m		1.0	175A	Si	A138z
52▼	SDAH10000F	10k	150n	500m	10k	1.0	175	Si	A452c
53▼	SHE100F	10k	150n	500m	10k	1.0	150	Si	E201d
54	SSCF10000	10k	150n	500m		1.0	150		A449e
55	Z100FG	10k	200n	500m		1.0	175	Si	A94AC
56	SODSLD10FS	10k	300n	500m		1.0	150A		M948g
57	Z100SG	10k	3.0u	500m		1.0	175	Si	A94AC
58▼	SDA10000	10k	5.0u	500m	10k	1.0	175A	Si	A394b
59▼	SDAH10000	10k	5.0u	500m	10k	1.0	150A	Si	A440c
60▼	SHE100	10k	5.0u	500m	10k	1.0	150	Si	E201d
61	SSCHE11000	11k	70n	500m		1.0	150	Si	A449d
62	SCF12500	12k	150n	500m		1.0	175	Si	A138s
63▼	SDA12500UF	12.5k	60n	500m	12k	1.0	175	Si	A449f
64▼	SDAH12500UF	12.5k	60n	500m	12k	1.0	175	Si	A452d
65▼	SDAH12500F	12.5k	150n	500m	12k	1.0	175	Si	A452d
66	SSCF12500	12.5k	150n	500m		1.0	150		A449f
67▼	SDA12500	12.5k	5.0u	500m	12k	1.0	175A	Si	A394c
68▼	SDAH12500	12.5k	5.0u	500m	12k	1.0	150A	Si	A440d
69	SSCHE15000	15k	70n	500m		1.0	150	Si	A449e
70	SODSLD15FS	15k	300n	500m		1.0	150A		M948h
71▼	SDA15000	15k	5.0u	500m	15k	1.0	175A	Si	A394d
72▼	SDAH15000	15k	5.0u	500m	15k	1.0	150A	Si	A440e
73	SSCHE20000	20k	70n	500m		1.0	150	Si	A449f
74	SODSLD20FS	20k	300n	500m		1.0	150A		M948j
75▼	SDA20000	20k	5.0u	500m	20k	1.0	175A	Si	A394e
76	SODSLD25FS	25k	300n	500m		1.0	150A		M948k
77▼	SDA25000	25k	5.0u	500m	25k	1.0	175A	Si	A394f
78	SODSLD30FS	30k	300n	500m		1.0	150A		M948m
79	SODSLD35FS	35k	300n	500m		1.0	150A		M948n
80	SODSLD40FS	40k	300n	500m		1.0	150A		M948p
81	SODSLD45FS	45k	300n	500m		1.0	150A		M948q
82	SODSLD50FS	50k	300n	500m		1.0	150A		M948r
83	1N4380	50	1.8n	570m		1.0m	175S	Si	DO7
84	ZS150	50	250n	600m		100m	200A	Si#$	DO7
85	ZS152	50	250n	600m		100m	200A	Si#$	DO7
86	ZS154	50	250n	600m		100m	200A	Si#$	DO7
87	ZS151	100	250n	600m		100m	200A	Si#$	DO7
88	ZS153	100	250n	600m		100m	200A	Si#$	DO7
89	ZS155	100	250n	600m		100m	200A	Si#$	DO7
90	1N4718	50	180n	750m	15	1.0m	150A	Si	DO7
91	2R1/52	20	10n	1.0			175J		A1du
92	2R52	20	10n	1.0		100m	175J	Si	TO52
93	3R52	30	10n	1.0		100m	175J	Si	TO52
94	4R52	40	10n	1.0		100m	175J	Si	TO52
95	5R1/52	50	10n	1.0			175J		A1du
96	5R52	50	10n	1.0		100m	175J	Si	TO52
97	DSR3050	50	25n	1.0		1.0	175A	Δ	A266c
98	DSR5050	50	25n	1.0		1.0	175A	Δ	A146n
99	SVD50-2	50	25n	1.0		1.0	175A	Δ	A266c
100	SVD50-3	50	25n	1.0		1.0	175A	Δ	A146n
101	1N5807	50	30n	1.0		1.0	175A	Si	A146t
102	BYW100-50	50	30n	1.0	30	0.2	150J	#	DO14
103	BYW100-100	50	30n	1.0	30	0.2	150J	#	DO14
104	UES201	50	30n	1.0		1.0	175A	Si	A60ak
105	BYW29-50	50	35n	1.0	30		150J	Si$	Y220AC
106	BYW30-50	50	35n	1.0	30		150J	Si$	
107	BYW81P-50(A)	50	35n	1.0	30		150J		Y220AB
108	BYW81PI-50(A)	50	35n	1.0	30		150J		Y220AB
109♦	MUR605CT	50	35n	1.0			175J		Y220AB
110	MUR805	50	35n	1.0			175J		Y220AC
111	MUR1505	50	35n	1.0			175J		Y220AC
112	MUR1605CT	50	35n	1.0			175J		Y220AB
113	MFE16-50	50	40n	1.0	30		150J	Si	DO4
114	BYW31-50	50	50n	1.0	30		150J		
115	BYW77-50	50	50n	1.0	30			Si	DO4
116	BYW77P-50(A)	50	50n	1.0	30		150J		M1303
117	BYW77PI-50(A)	50	50n	1.0	30		150J		M1303
118	BYW80-50	50	50n	1.0	30			Si	TO220AB
119	BYW81-50	50	50n	1.0	30			Si	DO4
120♦	BYW98-50	50	50n	1.0	30		150J	Si	DO2f
121	DSR3051	50	50n	1.0		1.0	175A	Δ	A266c
122	DSR5051	50	50n	1.0		1.0	175A	Δ	A146n
123	MFE41-50	50	50n	1.0	30		150J	Si	DO5
124	MUR2505	50	50n	1.0	30		175J		DO203AA
125	MUR5005	50	50n	1.0	30		175J		DO203AB
126▼	S1-050-50	50	50n	1.0	50	1.0	175J	Si	u5b
127▼	S3-050-50	50	50n	1.0	50	1.0	175J	Si	u5c
128	SVD50-6#B	50	50n	1.0		1.0	175A		S19ad
129	SVD50-6#C	50	50n	1.0		1.0	175A		S487
130	SVD50-12#B	50	50n	1.0		1.0	175A		S19ad
131	SVD50-12#C	50	50n	1.0		1.0	175A		S487
132	SVD50-12I	50	50n	1.0		500m	175	Si	DO4
133	SVD50-61	50	50n	1.0		500m	175	Si	DO4
134	UES501	50	50n	1.0		1.0	175A	Si	DO5
135	BYW08-50	50	60n	1.0	30		150J	#	DO5
136	BYW78-50	50	60n	1.0	30			Si	DO5
137	BYW92-50	50	60n	1.0	30			Si	DO5
138	BYW93-50	50	60n	1.0	30		150J		DO5
139	BYW94-50	50	60n	1.0	30		150J		S19n
140	BYW94-50U	50	60n	1.0	30		150J		DO5
141	MX3105	50	70n	1.0		1.0	175A	Si	A248f
142	MX4105	50	70n	1.0		1.0	175A	Si	A248f
143	PD9050A	50	70n	1.0	30	1.0	175A	Si	M574
144	SVD50-30#B	50	70n	1.0		1.0	175A		DO5
145	SVD50-30#C	50	70n	1.0		1.0	175A		S487a
146	DSR5052	50	75n	1.0		1.0			A60ae
147	16FL5S02	50	90n	1.0	30		150J		DO4
148	BYX61-50	50	100n	1.0	30	2.0	150J	Si	DO4
149	BYX65-50	50	100n	1.0	30	2.0	150J	Si	DO5
150	D621EB	50	100n	1.0	30		150J	Si△	DO5⊠
151	D628EB	50	100n	1.0	30		150J	Si△	DO4⊠
152	ESM243-50	50	100n	1.0	30		165J	Si	DO5⊠
153	MX6105	50	100n	1.0		1.0	175A	Si	A248f
154	MX8105	50	100n	1.0		1.0	175A	Si	A248f
155	UTX3105	50	100n	1.0		1.0	175	Si	A380a
156	UTX4105	50	100n	1.0		1.0	175	Si	A380a
157	388A	50	120n	1.0	30		150A	Si	DO15
158	SPD05F	50	150n	1.0	30		175J	Si	A60v
159	1N4933	50	200n	1	30		150A	Si	A398c
160	363A	50	200n	1.0	30		150A	Si	A3ad
161	ESM244-50	50	200n	1.0	30		165J	Si	DO5⊠
162	GI820	50	200n	1.0	30		175A	Si	A1eg
163	GI850	50	200n	1.0	3.0		90A		
164	IRD3899	50	200n	1.0	30		125J		DO5
165	IRD3909	50	200n	1.0	30		125J		DO5
166	MR830	50	200n	1.0	30	2.0	150J	Si	A179c
167	MR850	50	200n	1.0	30	2.0	175J		A282
168	MR850⊠	50	200n	1.0	30	10u	150J	Si	DO27
169	MR860	50	200n	1.0	30	3.0	160J		DO5
170	MR870	50	200n	1.0	30	3.0	160J		DO5
171	PFR850	50	200n	1.0	30			Si	DO27
172	R4020020NW	50	200n	1.0	30	3.0	150C	Si△	DO5⊠
173	R4020030NW	50	200n	1.0	30	3.0	150C	Si	DO5⊠
174	RAR2400	50	200n	1.0	30	4.0	150		M1228
175	RM4933	50	200n	1.0	30		175A	Si	F149
176▼	S1-050-200	50	200n	1.0	50	1.0	175J	Si	u5b
177▼	S3-050-200	50	200n	1.0	50	1.0	175J	Si	u5c
178▼	SM4933	50	200n	1.0	30		175A	Si	F149
179	SPD605	50	200n	1.0	30	1.0	200J	Si#	DO4
180	SPD605T	50	200n	1.0	30	1.0	200J	Si#	TO3
181	SPD1205	50	200n	1.0	30	1.0	200J	Si#	DO4
182	SPD1205T	50	200n	1.0	30	1.0	200J	Si#	TO3
183	SPDA12205	50	200n	1.0		1.0	200J	Si#	TO3
184	V330X	50	200n	1.0		2.0	135J	Si	A1zz
185	V350X	50	200n	1.0		2.0	135J	Si	A1zz
186	16FL5S05	50	225n	1.0	30		150J		DO4
187	1N5185	50	250n	1		1	175A	Si	A146e
188	12FL5S05	50	250n	1.0	30		150J		DO4
189	MB335	50	250n	1.0		1.0	175A	Si	A248f
190	MB366	50	250n	1.0		1.0	175A	Si	A248f
191	UTR2305	50	250n	1.0		1.0	175	Si	A380a
192	PLR810	50	300n	1.0	30			Si	A344r
193	SPD2005	50	300n	1.0	30	1.0	200J	Si#	DO5
194	UTR4405	50	300n	1.0		1.0	175A	Si	S292
195	UTR5405	50	300n	1.0		1.0	175A	Si	S292
196	UTR6405	50	300n	1.0		1.0	175A	Si	S292
197	MR810	50	350n	1.0	30	3.0	150J		A383
198	16FL5S10	50	390n	1.0	30		150J		DO4
199	12FL5S10	50	430n	1.0	30		150J		DO4
200	GI810	50	750n	1.0	30		175A	Si	DO15
201	GI910	50	750n	1.0	30		175A	Si	DO201
202♦	MR2400F	50	200u	1.0	30	4.0	175J	Si♦	M1339
203♦	S045AADF	50	200u	1.0	30	150	150	Si	DO5⊠
204♦	MUR105	50	29	1.0		1.0	175J	Si	DO41
205♦	MR820	50	150	1.0	30	2.0	175J		A264
206▼	1N4933G	50	200	1.0	30		175A	Si	D041
207	7R1/52	70	10n	1.0			175J		A1du
208	7R52	70	10n	1.0		100m	175J	Si	TO52
209	SR712	70	50n	1.0	30			Si	DO4
210	1N5808	75	30n	1.0		1.0	175A	Si	A146t
211	UES202	75	30n	1.0		1.0	175A	Si	A60ak
212	1N5813	75	35n	1.0		1.0	175J		DO4
213	UES502	75	50n	1.0		1.0	175A	Si	DO5
214	PD9050	80	75n	1		1	175	Si	A185d
215	10R1/52	100	10n	1.0			175J		A1du
216	DSR3100	100	25n	1.0		1.0	175A	Δ	A266c

SYMBOLS AND CODES
EXPLAINED IN INTERPRETER

4. HIGH-SPEED DIODES - Fast Recovery/Switching (Cont'd)

IN ORDER OF: (1) IF TEST (2) PIV (3) trr & (4) & VF & (5) TYPE NUMBER

LINE No.	5 TYPE NO.	2 PIV (V)	RECOVERY TIME 3 trr (s)	TEST CONDITIONS 1 IF (A)	4 VR (V)	IR (A)	MAX. TEMP (°C)	MAT.	DRAWING NO.
1	DSR5100	100	25n	1.0		1.0	175A	Δ	A146n
2	SVD100-2	100	25n	1.0		1.0	175A		A266c
3	SVD100-3	100	25n	1.0		1.0	175A		A146n
4	1N5809	100	30n	1.0		1.0	175A	Si	A146t
5	UES203	100	30n	1.0		1.0	175A	Si	A60ak
6	BYW29-100	100	35n	1.0	30		150J	Si$	Y220AC
7	BYW30-100	100	35n	1.0	30		150J	Si$	
8	BYW81P-100(A)	100	35n	1.0	30		150J		Y220AB
9	BYW81PI-100(A)	100	35n	1.0	30		150J		Y220AB
10	DE3101/2	100	35n	1.0		100m		Si	u53a
11	DE3101/5	100	35n	1.0		100m		Si	u53
12	DSDI7-01B	100	35n	1.0	100		150	Si	
13	DSDI13-01B	100	35n	1.0	100		150	Si	
14♦	MUR610CT	100	35n	1.0			175J		Y220AB
15	MUR810	100	35n	1.0			175J		Y220AC
16	MUR1510	100	35n	1.0			175J		Y220AC
17	MUR1610CT	100	35n	1.0			175J		Y220AB
18	MFE16-100	100	40n	1.0	30		150J	Si	DO4
19	BYW31-100	100	50n	1.0	30		150J		
20	BYW77-100	100	50n	1.0	30			Si	DO4
21	BYW77P-100(A)	100	50n	1.0	30		150J		M1303
22	BYW77PI-100(A)	100	50n	1.0	30		150J		M1303
23	BYW80-100	100	50n	1.0	30			Si	TO220AB
24	BYW81-100	100	50n	1.0	30			Si	DO4
25♦	BYW98-100	100	50n	1.0	30		150J	Si	DO2f
26	DSDI20-01B	100	50n	1.0	100		150	Si	
27	DSDI36-01B	100	50n	1.0	100		150	Si	
28	DSR3101	100	50n	1.0		1.0	175A	Δ	A266c
29	DSR5101	100	50n	1.0		1.0	175A	Δ	A146n
30	MFE41-100	100	50n	1.0	30		150J	Si	DO5
31	MUR2510	100	50n	1.0	30		175J		DO203AA
32	MUR5010	100	50n	1.0	30		175J		DO203AB
33▼	S1-100-50	100	50n	1.0	100	1.0	175J	Si	u5b
34▼	S3-100-50	100	50n	1.0	100	1.0	175J	Si	u5c
35	SVD100-6#B	100	50n	1.0		1.0	175A		S19ad
36	SVD100-6#C	100	50n	1.0		1.0	175A		S487
37	SVD100-12#B	100	50n	1.0		1.0	175A		S19ad
38	SVD100-12#C	100	50n	1.0		1.0	175A		S487
39	SVD100-12I	100	50n	1.0		500m	175	Si	DO4
40	SVD100-61	100	50n	1.0		500m	175	Si	DO4
41	UES503	100	50n	1.0		1.0	175A	Si	DO5
42	70HFL10S02	100	60n	1.0	30		125J		DO5
43	BYW08-100	100	60n	1.0	30		150J	#	DO5
44	BYW78-100	100	60n	1.0	30			Si	DO5
45	BYW92-100	100	60n	1.0	30			Si	DO5
46	BYW93-100	100	60n	1.0	30		150J		DO5
47	BYW94-100	100	60n	1.0	30		150J		S19n
48	BYW94-100U	100	60n	1.0	30		150J		DO5
49	40HFL10S02	100	70n	1.0	30		125J		DO5
50	MX3110	100	70n	1.0		1.0	175A	Si	A248f
51	MX4110	100	70n	1.0		1.0	175A	Si	A248f
52	PD9050B	100	70n	1.0	30	1.0	175A	Si	M574
53	SVD100-30#B	100	70n	1.0		1.0	175A		DO5
54	SVD100-30#C	100	70n	1.0		1.0	175A		S487a
55	SVD100-30I	100	70n	1.0		500m	175	Si	DO5
56	DSR5102	100	75n	1.0		1.0			A60ae
57	16FL10S02	100	90n	1.0	30		150J		DO4
58	12FL10S02	100	100n	1.0	30		150J		DO4
59	BYX61-100	100	100n	1.0	30	2.0	150J	Si	DO4
60	BYX65-100	100	100n	1.0	30	2.0	150J	Si	DO5
61	D621EC	100	100n	1.0	30		150J	SiΔ	DO5Ø
62	D628EC	100	100n	1.0	30		150J	SiΔ	DO4Ø
63	ESM243-100	100	100n	1.0	30		165J	Si	DO5Ø
64	MX6110	100	100n	1.0		1.0	175A	Si	A248f
65	MX8110	100	100n	1.0		1.0	175A	Si	A248f
66	UTX3110	100	100n	1.0		1.0	175	Si	A380a
67	UTX4110	100	100n	1.0		1.0	175	Si	A380a
68	6FL10S02	100	110n	1.0	30		150J		DO4
69	388B	100	120n	1.0	30		150A	Si	DO15
70	70HFL10S05	100	150n	1.0	30		125J		DO5
71	PR1002	100	150n	1.0	100	10u	150J	Si	DO41
72	PR3002	100	150n	1.0	30	2.0	175J	Si	DO27
73	SPD1F	100	150n	1.0	30		175J	Si	A60v
74	40HFL10S05	100	180n	1.0	30		125J		DO5
75	1N4934	100	200n	1	30		150A	Si	A398c
76	6BG11	100	200n	1.0	30		150J	Si	S19ab
77	12BG11	100	200n	1.0	30		150J	Si	S471Ø
78	12BH11	100	200n	1.0	30		75C	Si	S471
79	30BG11	100	200n	1.0	30		150J	Si	S19ac
80	363B	100	200n	1.0	30		150A	Si	A3ad
81	BY218-100	100	200n	1.0	30	2.0		Si	DO27
82	ESM244-100	100	200n	1.0	30		165J	Si	DO5Ø
83	GI821	100	200n	1.0	30		175A	Si	A1eg
84	GI851	100	200n	1.0	3.0		90A		
85	IRD3900	100	200n	1.0	30		125J		DO5
86	IRD3910	100	200n	1.0	30		125J		DO5
87	MR831	100	200n	1.0	30	2.0	150J	Si	A179c
88	MR851	100	200n	1.0	30	2.0	175J		A282
89	MR851Ø	100	200n	1.0	30	10u	150J	Si	DO27
90	MR861	100	200n	1.0	30	3.0	160J		DO5
91	MR871	100	200n	1.0	30	3.0	160J		DO5
92	PFR851	100	200n	1.0	30			Si	DO27
93	R711X	100	200n	1.0		2.0	150J	Si	TO3ØØ
94	R3020106NW	100	200n	1.0	30	2.0	150C	SiΔ	DO4Ø
95	R4020120NW	100	200n	1.0	30	3.0	150C	SiΔ	DO5Ø
96	R4020130NW	100	200n	1.0	30	3.0	150C	Si	DO5Ø
97	RAR2401	100	200n	1.0	30	4.0	150		M1228
98	RM4934	100	200n	1.0	30		175A	Si	F149
99▼	S3-100-200	100	200n	1.0	100	1.0	175J	Si	u5c
100▼	SM4934	100	200n	1.0	30		175A	Si	F149
101	SPD610	100	200n	1.0	30	1.0	200J	Si#	DO4
102	SPD610T	100	200n	1.0	30	1.0	200J	Si	TO3
103	SPD1210	100	200n	1.0	30	1.0	200J	Si#	DO4
104	SPD1210T	100	200n	1.0	30	1.0	200J	Si#	TO3
105	SPDA12210	100	200n	1.0		1.0	200J	Si#	TO3
106	V331X	100	200n	1.0		2.0	135J	Si	A1zz
107	V351X	100	200n	1.0		2.0	135J	Si	A1zz
108	VYA100XS	100	200n	1.0		2.0	150J	SiΔ	S459a*
109	VYB100XS	100	200n	1.0		2.0	150J	SiΔ	S459b*
110	VYC100XS	100	200n	1.0		2.0	150J	SiΔ	S459c*
111	VYD100XS	100	200n	1.0		2.0	150J	SiΔ	S459d*
112	16FL10S05	100	225n	1.0	30		150J		DO4
113	9MF2A100	100	250n	1.0		1.0	150A		A435
114	12FL10S05	100	250n	1.0	30		150J		DO4
115	MB336	100	250n	1.0		1.0	175A	Si	A248f
116	MB367	100	250n	1.0		1.0	175A	Si	A248f
117▼	MF2A100	100	250n	1.0			150J	Si	DO1Ø
118	MF2A100F	100	250n	1.0		1.0	150J		A89d
119	MF10-100	100	250n	1.0			150A	Si	DO4
120	UTR2310	100	250n	1.0		1.0	175	Si	A380a
121	70HFL10S10	100	290n	1.0	30		125J		DO5
122♦	BYT71-100	100	300n	1.0	30		125S	Si	TO220AB
123	ESM765-100	100	300n	1.0	30		150	Si	M774
124	PLR811	100	300n	1.0	30			Si	A344r
125♦	RTF10	100	300n	1.0	30		150J	Si	TO220AB
126	SPD2010	100	300n	1.0	30	1.0	200J	Si#	DO5
127	UTR4410	100	300n	1.0		1.0	175A	Si	S292
128	UTR5410	100	300n	1.0		1.0	175A	Si	S292
129	UTR6410	100	300n	1.0		1.0	175A	Si	S292
130	9MF2B100	100	350n	1.0		1.0	150A		A435
131	9MF10B100	100	350n	1.0			150C		S436
132	9MF10B100R	100	350n	1.0			150C		S436
133	40HFL10S10	100	350n	1.0	30		125J		DO5
134▼	MF2B100	100	350n	1.0			150J	Si	DO1Ø
135	MF2B100F	100	350n	1.0		1.0	150J		A89d
136	MR811	100	350n	1.0	30	3.0	150J		A383
137	16FL10S10	100	390n	1.0	30		150J		DO4
138	S8-01FR	100	400n	1.0		1.0	150J	Si	S19m
139	S20-01FR	100	400n	1.0		1.0	150J	Si	S19p
140	SKE4F2/01	100	400n	1.0		1.0	130J	Si	M571c
141	12FL10S10	100	430n	1.0	30		150J		DO4
142	684-1	100	500n	1.0		1.0	150		C244f
143	MF41-100	100	500n	1.0			150A	Si	DO5Ø
144	S100-01FR	100	500n	1.0		1.0	150J	Si	
145	GI811	100	750n	1.0	30		175A	Si	DO15
146	GI911	100	750n	1.0	30		175A	Si	DO201
147	MF71-100	100	1.0u	1.0			150J	Si	DO5Ø
148♦	MR2401F	100	200u	1.0	30	4.0	175J	Si♦	M1339
149♦	S04501DF	100	200u	1.0	30		150	Si	DO5Ø
150♦	MUR110	100	29	1.0		1.0	175J	Si	DO41
151♦	MR821	100	150	1.0	30	2.0	175J		A264
152▼	1N4934G	100	200	1.0	30		175A	Si	D041
153	12R1/52	125	10n	1.0			175J		A1du
154	12R52	125	10n	1.0		100m	175J	Si	TO52
155	1N5810	125	30n	1.0		1.0	175A	Si	A146t
156	UES204	125	30n	1.0		1.0	175A	Si	A60ak
157	1N5815	125	35n	1.0		1.0	175J		DO4
158	UES504	125	50n	1.0		1.0	175A	Si	DO5
159	15R1/52	150	10n	1.0			175J		A1du
160	15R52	150	10n	1.0		100m	175J	Si	TO52
161	DSR3150	150	25n	1.0		1.0	175A	Δ	A266c
162	DSR5150	150	25n	1.0		1.0	175A	Δ	A146n
163	SVD150-2	150	25n	1.0		1.0	175A		A266c
164	SVD150-3	150	25n	1.0		1.0	175A		A146n
165	1N5811	150	30n	1.0		1.0	175A	Si	A146t
166	BYW100-150	150	30n	1.0	30	0.2	150J	#	DO14
167	BYW29-150	150	35n	1.0	30		150J	Si$	Y220AC
168	BYW30-150	150	35n	1.0	30		150J	Si$	
169	BYW81P-150(A)	150	35n	1.0	30		150J		Y220AB
170	BYW81PI-150(A)	150	35n	1.0	30		150J		Y220AB
171	DSDI7-015B	150	35n	1.0	150		150	Si	
172	DSDI13-015B	150	35n	1.0	150		150	Si	
173♦	MUR615CT	150	35n	1.0			175J		Y220AB
174	MUR815	150	35n	1.0			175J		Y220AC
175	MUR1515	150	35n	1.0			175J		Y220AC
176	MUR1615CT	150	35n	1.0			175J		Y220AB
177	MFE16-150	150	40n	1.0	30		150J	Si	DO4
178	BYW31-150	150	50n	1.0	30		150J		
179	BYW77-150	150	50n	1.0	30			Si	DO4
180	BYW77P-150(A)	150	50n	1.0	30		150J		M1303
181♦	BYW77PI-150(A)	150	50n	1.0	30		150J		M1303
182	BYW80-150	150	50n	1.0	30			Si	TO220AB
183	BYW81-150	150	50n	1.0	30			Si	DO4
184♦	BYW98-150	150	50n	1.0	30		150J	Si	DO2f
185	DSDI20-015B	150	50n	1.0	150		150	Si	
186	DSDI36-015B	150	50n	1.0	150		150	Si	
187	DSR3151	150	50n	1.0		1.0	175A	Δ	A266c
188	DSR5151	150	50n	1.0		1.0	175A	Δ	A146n
189	MFE41-150	150	50n	1.0	30		150J	Si	DO5
190	MUR2515	150	50n	1.0	30		175J		DO203AA
191	MUR5015	150	50n	1.0	30		175J		DO203AB
192	UES505	150	50n	1.0		1.0	175A	Si	DO5
193♦	BYW08-150	150	60n	1.0	30		150J	#	DO5
194	BYW78-150	150	60n	1.0	30			Si	DO5
195	BYW92-150	150	60n	1.0	30			Si	DO5
196	BYW93-150	150	60n	1.0	30		150J		DO5
197	BYW94-150	150	60n	1.0	30		150J		S19n
198	BYW94-150U	150	60n	1.0	30		150J		DO5
199	MX3115	150	70n	1.0		1.0	175A	Si	A248f
200	MX4115	150	70n	1.0		1.0	175A	Si	A248f
201	PD9050C	150	70n	1.0	30	1.0	175A	Si	M574
202	D621ED	150	100n	1.0	30		150J	SiΔ	DO5Ø
203	D628ED	150	100n	1.0	30		150J	SiΔ	DO4Ø
204	MX6115	150	100n	1.0		1.0	175A	Si	A248f
205	MX8115	150	100n	1.0		1.0	175A	Si	A248f
206	UTX3115	150	100n	1.0		1.0	175	Si	A380a
207	UTX4115	150	100n	1.0		1.0	175	Si	A380a
208♦	MUR115	150	29	1.0		1.0	175J	Si	DO41
209	BYV30-200	200	1.0n	1.0	30		150	Si	DO4
210	DSR3200	200	25n	1.0		1.0	175A	Δ	A266c
211	DSR5200	200	25n	1.0		1.0	175A	Δ	A146n
212	SVD200-2	200	25n	1.0		1.0	175A		A266c

SYMBOLS AND CODES EXPLAINED IN INTERPRETER

4. HIGH-SPEED DIODES - Fast Recovery/Switching (Cont'd)

IN ORDER OF: (1) IF TEST (2) PIV (3) trr & (4) & VF & (5) TYPE NUMBER

LINE No.	5 TYPE NO.	2 PIV (V)	3 RECOVERY TIME trr (s)	TEST CONDITIONS 1 IF (A)	4 VR (V)	IR (A)	MAX. TEMP (°C)	MAT.	DRAWING NO.
1	SVD200-3	200	25n	1.0		1.0	175A		A146n
2	BYW100-200	200	30n	1.0	30	0.2	150J	#	DO14
3	BYW29-200	200	35n	1.0	30	1.0	150J	Si$	Y220a
4	BYW30-200	200	35n	1.0	30	1.0	150J	Si$	DO4
5	BYW81P-200(A)	200	35n	1.0	30		150J		Y220AB
6	BYW81PI-200(A)	200	35n	1.0	30		150J		Y220AB
7♦	MUR620CT	200	35n	1.0			175J		Y220AB
8	MUR1620CT	200	35n	1.0			175J		Y220AB
9	BYT60-200	200	50n	1.0	25		150	Si	DO5
10	BYW31-200	200	50n	1.0	30	1.0	150J	Si$	DO4
11	BYW77-200	200	50n	1.0	30			Si	DO4
12	BYW77P-200(A)	200	50n	1.0	30		150J		M1303
13♦	BYW77PI-200(A)	200	50n	1.0	30		150J		M1303
14	BYW80-200	200	50n	1.0	30			Si	TO220AB
15	BYW81-200	200	50n	1.0	30			Si	DO4
16♦	BYW98-200	200	50n	1.0	30		150J	Si	DO2f
17	DSR3201	200	50n	1.0		1.0	175A	Δ	A266c
18	DSR5201	200	50n	1.0		1.0	175A	Δ	A146n
19	MUR2520	200	50n	1.0	30		175J		DO203AA
20	MUR5020	200	50n	1.0	30		175J		DO203AB
21▼	S1-200-50	200	50n	1.0	200	1.0	175J	Si	u5b
22▼	S3-200-50	200	50n	1.0	200	1.0	175J	Si	u5c
23	SVD200-12	200	50n	1.0	200	1.0		Si	DO4
24	SVD200-12I	200	50n	1.0	200	1.0		Si	DO4
25	BYT01-200	200	55n	1.0	30		150J	#	DO14
26	BYT03-200	200	55n	1.0	30		150J	#	A69ai
27	70HFL20S02	200	60n	1.0	30		125J		DO5
28	BYW08-200	200	60n	1.0	30		150J	#	DO5
29	BYW78-200	200	60n	1.0	30			Si	DO5
30	BYW92-200	200	60n	1.0	30			Si	DO5
31	BYW93-200	200	60n	1.0	30		150J		DO5
32	BYW94-200	200	60n	1.0	30		150J		S19n
33	BYW94-200U	200	60n	1.0	30		150J		DO5
34	MUR820	200	60n	1.0			175J		Y220AC
35	MUR1520	200	60n	1.0			175J		Y220AC
36	40HFL20S02	200	70n	1.0	30		125J		DO5
37	MX3120	200	70n	1.0		1.0	175A	Si	A248f
38	MX4120	200	70n	1.0		1.0	175A	Si	A248f
39	PD9050D	200	70n	1.0	30	1.0	175A	Si	M574
40	SVD200-30	200	70n	1.0	200	1.0		Si	DO5
41	SVD200-30I	200	70n	1.0	200	1.0		Si	DO5
42	BYT08P200	200	75n	1.0	30		150J	#	TO220AB
43	BYT08PI200	200	75n	1.0	30		150J	#	TO220AB
44	BYT16P200	200	75n	1.0	30		150J	#	TO220AB
45	DSR5202	200	75n	1.0		1.0			A60ae
46	16FL20S02	200	90n	1.0	30		150J		DO4
47	1N4824	200	100n	1			170A	Si	DO13
48	12FL20S02	200	100n	1.0	30		150J		DO4
49	BYT30-200	200	100n	1.0	30		150J	#	DO5
50	BYT30P200	200	100n	1.0	30		150J	#	C262
51	BYT30PI200	200	100n	1.0	30		150J	#	C262
52	BYT60P200	200	100n	1.0	30		150J	#	C262
53	BYX50-200	200	100n	1.0	30		150J	Si	DO4Ø
54	BYX61-200	200	100n	1.0	30	2.0	150J	Si	DO4
55	BYX65-200	200	100n	1.0	30	2.0	150J	Si	DO5
56	D621EE	200	100n	1.0	30		150J	SiΔ	DO5Ø
57	D628EE	200	100n	1.0	30		150J	SiΔ	DO4Ø
58	DSD12-02A	200	100n	1.0	200		150	Si	
59	ESM243-200	200	100n	1.0	30		165J	Si	DO5Ø
60	MX6120	200	100n	1.0		1.0	175A	Si	A248f
61	MX8120	200	100n	1.0		1.0	175A	Si	A248f
62	UTX3120	200	100n	1.0		1.0	175	Si	A380a
63	UTX4120	200	100n	1.0		1.0	175	Si	A380a
64	6FL20S02	200	110n	1.0	30		150J		DO4
65	388D	200	120n	1.0	30		150A	Si	DO15
66	1N4942	200	150n	1.0		250m	175A	Si	A1tc
67	70HFL20S05	200	150n	1.0	30		125J		DO5
68	BY233-200	200	150n	1.0	30		150J	#	TO220AB
69	SPD2F	200	150n	1.0	30		175J	Si	A60v
70	40HFL20S05	200	180n	1.0	30		125J		DO5
71	1N4935	200	200n	1	30		150A	Si	A398c
72	6DG11	200	200n	1.0	30		150J	Si	S19ab
73	12DG11	200	200n	1.0	30		150J	Si	S471Ø
74	12DH11	200	200n	1.0	30		75C	Si	S471
75	30DG11	200	200n	1.0	30		150J	Si	S19ac
76	363D	200	200n	1.0	30		150A	Si	A3ad
77	BY218-200	200	200n	1.0	30	2.0		Si	DO27
78	BYX30-200	200	200n	1.0	30	2.0	150J	Si	DO4Ø
79	BYX46-200	200	200n	1.0	30		165J	Si	DO4Ø
80	ESM244-200	200	200n	1.0	30		165J	Si	DO5Ø
81	GI822	200	200n	1.0	30		175A	Si	A1eg
82	GI852	200	200n	1.0	3.0		90A		
83	IRD3901	200	200n	1.0	30		125J		DO5
84	IRD3911	200	200n	1.0	30		125J		DO5
85	MR832	200	200n	1.0	30	2.0	150J	Si	A179c
86	MR852	200	200n	1.0	30	2.0	175J		A282
87	MR852Ø	200	200n	1.0	30	10u	150J	Si	DO27
88	MR862	200	200n	1.0	30	3.0	160J		DO5
89	MR872	200	200n	1.0	30	3.0	160J		DO5
90	PFR852	200	200n	1.0	30			Si	DO27
91	R712X	200	200n	1.0		2.0	150J	Si	TO3ØØ
92	R3020206NW	200	200n	1.0	30	2.0	150C	SiΔ	DO4Ø
93	R4020220NW	200	200n	1.0	30	3.0	150C	SiΔ	DO5Ø
94	R4020230NW	200	200n	1.0	30	3.0	150C	Si	DO5Ø
95	RAR2402	200	200n	1.0	30	4.0	150		M1228
96	RM4935	200	200n	1.0	30		175A	Si	F149
97▼	S3-200-200	200	200n	1.0	200	1.0	175J	Si	u5c
98♦	S04502DF	200	200n	1.0	30		150	Si	DO5Ø
99▼	SM4935	200	200n	1.0	30		175A	Si	F149
100	SPD620	200	200n	1.0	30	1.0	200J	Si#	DO4
101	SPD620T	200	200n	1.0	30	1.0	200J	Si	TO3
102	SPD1220	200	200n	1.0	30	1.0	200J	Si#	DO4
103	SPD1220T	200	200n	1.0	30	1.0	200J	Si#	TO3
104	SPDA12220	200	200n	1.0		1.0	200J	Si#	TO3
105	V332X	200	200n	1.0		2.0	135J	Si	A1zz
106	V352X	200	200n	1.0		2.0	135J	Si	A1zz
107	VYA200XS	200	200n	1.0		2.0	150J	SiΔ	S459a*
108	VYB200XS	200	200n	1.0		2.0	150J	SiΔ	S459b*
109	VYC200XS	200	200n	1.0		2.0	150J	SiΔ	S459c*
110	VYD200XS	200	200n	1.0		2.0	150J	SiΔ	S459d*
111	16FL20S05	200	225n	1.0	30		150J		DO4
112	9MF2A200	200	250n	1.0		1.0	150A		A435
113	12FL20S05	200	250n	1.0	30		150J		DO4
114	MB337	200	250n	1.0		1.0	175A	Si	A248f
115	MB368	200	250n	1.0		1.0	175A	Si	A248f
116▼	MF2A200	200	250n	1.0			150J	Si	DO1Ø
117	MF2A200F	200	250n	1.0		1.0	150J		A89d
118	MF10-200	200	250n	1.0			150A	Si	DO4
119	UTR2320	200	250n	1.0		1.0	175	Si	A380a
120	70HFL20S10	200	290n	1.0	30		125J		DO5
121	BYT71-200	200	300n	1.0	30		150J	#	TO220AB
122	DSD0.8-02B	200	300n	1.0			150J	Si	M960
123	DSD0.9-02A	200	300n	1.0			150A	Si	C194
124	ESM765-200	200	300n	1.0	30		150	Si	M774
125	PLR812	200	300n	1.0	30			Si	A344r
126♦	RTF20	200	300n	1.0	30		150J	Si	TO220AB
127	9MF2B200	200	350n	1.0		1.0	150A		A435
128	9MF10B200	200	350n	1.0			150C		S436
129	9MF10B200R	200	350n	1.0			150C		S436
130	40HFL20S10	200	350n	1.0	30		125J		DO5
131▼	MF2B200	200	350n	1.0			150J	Si	DO1Ø
132	MF2B200F	200	350n	1.0		1.0	150J		A89d
133	MR812	200	350n	1.0	30	3.0	150J		A383
134	16FL20S10	200	390n	1.0	30		150J		DO4
135	S8-02FR	200	400n	1.0		1.0	150J	Si	S19m
136	S20-02FR	200	400n	1.0		1.0	150J	Si	S19p
137	SKE4F2/02	200	400n	1.0		1.0	130J	Si	M571c
138	SKE4G2/02	200	400n	1.0		1.0	130J	Si	M571c
139	SKN4F20/02	200	400n	1.0		1.0	130J	Si	DO4Ø
140	SKN4F40/02	200	400n	1.0		1.0	130J	Si	DO5Ø
141	UTR4420	200	400n	1.0		1.0	175A	Si	S292
142	UTR5420	200	400n	1.0		1.0	175A	Si	S292
143	UTR6420	200	400n	1.0		1.0	175A	Si	S292
144	12FL20S10	200	430n	1.0	30		150J		DO4
145	684-2	200	500n	1.0		1.0	150		C244f
146	MF41-200	200	500n	1.0			150A	Si	DO5Ø
147	S100-02FR	200	500n	1.0		1.0	150J	Si	
148	S200-02FR	200	500n	1.0		1.0	150J	Si	S480
149	GI812	200	750n	1.0	30		175A	Si	DO15
150	GI912	200	750n	1.0	30		175A	Si	DO201
151	SK4F4/02	200	900n	1.0			130J	Si	A277m
152	SK4G4/02	200	900n	1.0			130J	Si	A277m
153	MF71-200	200	1.0u	1.0			150J	Si	DO5Ø
154♦	MR2402F	200	200u	1.0	30	4.0	175J	Si♦	M1339
155♦	MR822	200	150	1.0	30	2.0	175J		A264
156▼	1N4935G	200	200	1.0	30		175A	Si	D041
157	MX3125	250	70n	1.0		1.0	175A	Si	A248f
158	MX4125	250	70n	1.0		1.0	175A	Si	A248f
159	PD9050E	250	70n	1.0	30	1.0	175A	Si	M574
160	D621EF	250	100n	1.0	30		150J	SiΔ	DO5Ø
161	D628EF	250	100n	1.0	30		150J	SiΔ	DO4Ø
162	MX6125	250	100n	1.0		1.0	175A	Si	A248f
163	MX8125	250	100n	1.0		1.0	175A	Si	A248f
164	BYV30-300	300	1.0n	1.0	30		150	Si	DO4
165	BYT60-300	300	50n	1.0	25		150	Si	DO5
166	BYT01-300	300	55n	1.0	30		150J	#	DO14
167	BYT03-300	300	55n	1.0	30		150J	#	A69ai
168	MUR830	300	60n	1.0			175J		Y220AC
169	MUR1530	300	60n	1.0			175J		Y220AC
170	SVD300-12#B	300	70n	1.0		1.0	175A		S19ad
171	SVD300-12#C	300	70n	1.0		1.0	175A		S487
172	SVD300-12I	300	70n	1.0		500m	175	Si	DO4
173	BYT08P300	300	75n	1.0	30		150J	#	TO220AB
174	BYT08PI300	300	75n	1.0	30		150J	#	TO220AB
175	BYT16P300	300	75n	1.0	30		150J	#	TO220AB
176	MX2130	300	80n	1.0		1.0	175A	Si	A248f
177	MX3130	300	80n	1.0		1.0	175A	Si	A248f
178	BYT30-300	300	100n	1.0	30		150J	#	DO5
179	BYT30P300	300	100n	1.0	30		150J	#	C262
180	BYT30PI300	300	100n	1.0	30		150J	#	C262
181	BYT60P300	300	100n	1.0	30		150J	#	C262
182	BYX50-300	300	100n	1.0	30		150J	Si	DO4Ø
183	BYX61-300	300	100n	1.0	30	2.0	150J	Si	DO4
184	BYX65-300	300	100n	1.0	30	2.0	150J	Si	DO5
185	D621EG	300	100n	1.0	30		150J	SiΔ	DO5Ø
186	D628EG	300	100n	1.0	30		100C	SiΔ	DO4Ø
187	ESM243-300R	300	100n	1.0	30		165J		DO5
188	388F	300	120n	1.0	30		150A	Si	DO15
189	1N4943	300	150n	1.0		250m	175A	Si	A1tc
190	363F	300	200n	1.0	30		150A	Si	A3ad
191	BYX30-300	300	200n	1.0	30	2.0	150J	Si	DO4Ø
192	BYX46-300	300	200n	1.0	30		165J	Si	DO4Ø
193	IRD3902	300	200n	1.0	30		125J		DO5
194	IRD3912	300	200n	1.0	30		125J		DO5
195	R3020306NW	300	200n	1.0	30	2.0	150C	SiΔ	DO4Ø
196	R4020320NW	300	200n	1.0	30	3.0	150C	SiΔ	DO5Ø
197	R4020330NW	300	200n	1.0	30	3.0	150C	Si	DO5Ø
198	RG3F	300	200n	1.0	3.0		175	Si	A146e
199	RP300F	300	200n	1.0	30		175	Si	A3ac
200♦	S04503DF	300	200n	1.0	30		150	Si	DO5Ø
201	SPD630	300	200n	1.0	30	1.0	200J	Si#	DO4
202	SPD630T	300	200n	1.0	30	1.0	200J	Si#	TO3
203	SPD1230	300	200n	1.0	30	1.0	200J	Si#	DO4
204	SPD1230T	300	200n	1.0	30	1.0	200J	#	TO3
205	SPDA12230	300	200n	1.0		1.0	200J	Si#	TO3
206	PLR813	300	300n	1.0	30			Si	A344r
207	MR813	300	350n	1.0	30	3.0	150J		A383
208	684-3	300	500n	1.0		1.0	150		C244f
209	BYX55-350	300	750n	1.0	50		125J	SiΔ	A283a
210	SVD350-12#B	350	70n	1.0		1.0	175A		S19ad
211	SVD350-12#C	350	70n	1.0		1.0	175A		S487
212	SVD350-12I	350	70n	1.0		500m	175	Si	DO4
213	PY55-350	350	300n	1.0	50			Si	A1bg
214	BYV30-400	400	1.0n	1.0	30		150	Si	DO4
215	BYT60-400	400	50n	1.0	25		150	Si	DO5
216▼	S1-400-50	400	50n	1.0	400	1.0	175J	Si	u5b

SYMBOLS AND CODES EXPLAINED IN INTERPRETER

4. HIGH-SPEED DIODES - Fast Recovery/Switching (Cont'd)

IN ORDER OF: (1) IF TEST (2) PIV (3) trr & (4) & VF & (5) TYPE NUMBER

LINE No.	5 TYPE NO.	2 PIV (V)	RECOVERY TIME 3 trr (s)	TEST CONDITIONS 1 IF (A)	4 VR (V)	IR (A)	MAX. TEMP (°C)	MAT.	DRAWING NO.
1▼	S3-400-50	400	50n	1.0	400	1.0	175J	Si	u5c
2	BYT01-400	400	55n	1.0	30		150J	#	DO14
3	BYT03-400	400	55n	1.0	30		150J	#	A69ai
4	70HFL40S02	400	60n	1.0	30		125J		DO5
5	MUR840	400	60n	1.0			175J		Y220AC
6	MUR1540	400	60n	1.0			175J		Y220AC
7	40HFL40S02	400	70n	1.0	30		125J		DO5
8	SVD400-12#B	400	70n	1.0		1.0	175A		S19ad
9	SVD400-12#C	400	70n	1.0		1.0	175A		S487
10	SVD400-12I	400	70n	1.0		500m	175	Si	DO4
11	BYT08P400	400	75n	1.0	30		150J	#	TO220AB
12	BYT08PI400	400	75n	1.0	30		150J	#	TO220AB
13	BYT16P400	400	75n	1.0	30		150J	#	TO220AB
14	MX2140	400	80n	1.0		1.0	175A	Si	A248f
15	MX3140	400	80n	1.0		1.0	175A	Si	A248f
16	16FL40S02	400	90n	1.0	30		150J		DO4
17	12FL40S02	400	100n	1.0	30		150J		DO4
18	BYT30-400	400	100n	1.0	30		150J	#	DO5
19	BYT30P400	400	100n	1.0	30		150J	#	C262
20	BYT30PI400	400	100n	1.0	30		150J	#	C262
21	BYT60P400	400	100n	1.0	30		150J	#	C262
22	BYX50-400	400	100n	1.0	30		150J	Si	DO4Ø
23	BYX61-400	400	100n	1.0	30	2.0	150J	Si	DO4
24	BYX65-400	400	100n	1.0	30	2.0	150J	Si	DO5
25	DSD12-04A	400	100n	1.0			150J		DO4Ø
26	ESM243-400	400	100n	1.0	30		165J	Si	DO5Ø
27	6FL40S02	400	110n	1.0	30		150J		DO4
28	388H	400	120n	1.0	30		150A	Si	DO15
29	1N4944	400	150n	1.0		250m	175A	Si	A1tc
30	70HFL40S05	400	150n	1.0	30		125J		DO5
31	BY233-400	400	150n	1.0	30		150J	#	TO220AB
32	PR1004	400	150n	1.0	30	10u	150J	Si	DO41
33	PR3004	400	150n	1.0	30	2.0	175J	Si	DO27
34	SKN2F17/04	400	150n	1.0	30	1.0	150J	Si	S187e
35	SKR2F17/04	400	150n	1.0	30	1.0	150J	Si	S187e
36	SPD4F	400	150n	1.0	30		175J	Si	A60v
37	40HFL40S05	400	180n	1.0	30		125J		DO5
38	1N4936	400	200n	1	30		150A	Si	A398c
39	6GG11	400	200n	1.0	30		150J	Si	S19ab
40	12GG11	400	200n	1.0	30		150J	Si	S471Ø
41	12GH11	400	200n	1.0	30		75C	Si	S471
42	30GG11	400	200n	1.0	30		150J	Si	S19ac
43	363H	400	200n	1.0	30		150A	Si	A3ad
44	BY218-400	400	200n	1.0	30	2.0		Si	DO27
45	BYX30-400	400	200n	1.0	30	2.0	150J	Si	DO4Ø
46	BYX46-400	400	200n	1.0	30		165J	Si	DO4Ø
47	ESM244-400	400	200n	1.0	30		165J	Si	DO5Ø
48	GI824	400	200n	1.0	30		175A	Si	A1eg
49	GI854	400	200n	1.0	3.0		90A		
50	IRD3903	400	200n	1.0	30		125J		DO5
51	IRD3913	400	200n	1.0	30		125J		DO5
52	MR834	400	200n	1.0	30	2.0	150J	Si	A179c
53	MR854	400	200n	1.0	30	2.0	175J		A282
54	MR854Ø	400	200n	1.0	30	10u	150J	Si	DO27
55	MR864	400	200n	1.0	30	3.0	160J		DO5
56	MR874	400	200n	1.0	30	3.0	160J		DO5
57	PFR854	400	200n	1.0	30			Si	DO27
58	R714X	400	200n	1.0		2.0	150J	Si	TO3ØØ
59	R3020406NW	400	200n	1.0	30	2.0	150C	SiΔ	DO4Ø
60	R4020420NW	400	200n	1.0	30	3.0	150C	SiΔ	DO5Ø
61	R4020430NW	400	200n	1.0	30	3.0	150C	Si	DO5Ø
62	RAR2404	400	200n	1.0	30	4.0	150		M1228
63	RM4936	400	200n	1.0	30		175A	Si	F149
64▼	S3-400-200	400	200n	1.0	400	1.0	175J	Si	u5c
65♦	S04504DF	400	200n	1.0	30		150	Si	DO5Ø
66	SKN2F50/04	400	200n	1.0	30	1.0	150J	Si	S565
67	SKR2F50/04	400	200n	1.0	30	1.0	150J	Si	S565
68▼	SM4936	400	200n	1.0	30		175A	Si	F149
69	V334X	400	200n	1.0		2.0	135J	Si	A1zz
70	V354X	400	200n	1.0		2.0	135J	Si	A1zz
71	VYA400XS	400	200n	1.0		2.0	150J	SiΔ	S459a*
72	VYB400XS	400	200n	1.0		2.0	150J	SiΔ	S459b*
73	VYC400XS	400	200n	1.0		2.0	150J	SiΔ	S459c*
74	VYD400XS	400	200n	1.0		2.0	150J	SiΔ	S459d*
75	9MF2A400	400	250n	1.0		1.0	150A		A435
76▼	MF2A400	400	250n	1.0			150J	Si	DO1Ø
77	MF2A400F	400	250n	1.0		1.0	150J		A89d
78	MF10-400	400	250n	1.0			150A	Si	DO4
79	70HFL40S10	400	290n	1.0	30		125J		DO5
80♦	BYT71-400	400	300n	1.0	30		125J	Si	TO220AB
81	ESM765-400	400	300n	1.0	30		150	Si	M774
82	MB338	400	300n	1.0		1.0	175A	Si	A248f
83	MB369	400	300n	1.0		1.0	175A	Si	A248f
84	PLR814	400	300n	1.0	30			Si	A344r
85	UTR2340	400	300n	1.0		1.0	175	Si	A380a
86	9MF2B400	400	350n	1.0		1.0	150A		A435
87	9MF10B400	400	350n	1.0			150C		S436
88	9MF10B400R	400	350n	1.0			150C		S436
89	40HFL40S10	400	350n	1.0	30		125J		DO5
90▼	MF2B400	400	350n	1.0			150J	Si	DO1Ø
91	MF2B400F	400	350n	1.0		1.0	150J		A89d
92	MR814	400	350n	1.0	30	3.0	150J		A383
93	16FL40S10	400	390n	1.0	30		150J		DO4
94	S8-04FR	400	400n	1.0		1.0	150J	Si	S19m
95	SKE4F2/04	400	400n	1.0		1.0	130J	Si	M571c
96	SKE4G2/04	400	400n	1.0		1.0	130J	Si	M571c
97	SKN4F20/04	400	400n	1.0		1.0	130J	Si	DO4Ø
98	SKN4F40/04	400	400n	1.0		1.0	130J	Si	DO5Ø
99	12FL40S10	400	430n	1.0	30		150J		DO4
100	10DF4	400	500n	1.0		10m	150J	Si	Alaaw
101	684-4	400	500n	1.0		1.0	150		C244f
102	MF41-400	400	500n	1.0			150A	Si	DO5Ø
103	S100-04FR	400	500n	1.0		1.0	150J	Si	
104	S200-04FR	400	500n	1.0		1.0	150J	Si	S480
105	UTR4440	400	500n	1.0		1.0	175A	Si	S292
106	UTR5440	400	500n	1.0		1.0	175A	Si	S292
107	UTR6440	400	500n	1.0		1.0	175A	Si	S292
108	GI814	400	750n	1.0	30		175A	Si	DO15
109	GI914	400	750n	1.0	30		175A	Si	DO201
110	SK4F4/04	400	900n	1.0			130J	Si	A277m

LINE No.	5 TYPE NO.	2 PIV (V)	RECOVERY TIME 3 trr (s)	TEST CONDITIONS 1 IF (A)	4 VR (V)	IR (A)	MAX. TEMP (°C)	MAT.	DRAWING NO.
111	SK4G4/04	400	900n	1.0			130J	Si	A277m
112	MF71-400	400	1.0u	1.0			150J	Si	DO5Ø
113♦	MR2404F	400	200u	1.0	30	4.0	175J	Si	M1339
114♦	MR824	400	150	1.0	30	2.0	175J		A264
115▼	1N4936G	400	200	1.0	30		175A	Si	D041
116	SVD450-12#B	450	70n	1.0		1.0	175A		S19ad
117	SVD450-12#C	450	70n	1.0		1.0	175A		S487
118	SVD450-12I	450	70n	1.0		500m	175	Si	DO4
119	MUR850	500	60n	1.0			175J		Y220AC
120	MUR1550	500	60n	1.0			175J		Y220AC
121	MX2150	500	80n	1.0		1.0	175A	Si	A248f
122	MX3150	500	80n	1.0		1.0	175A	Si	A248f
123	1N4945	500	150n	1.0		250m	175A	Si	A1tc
124	BYX30-500	500	200n	1.0	30	2.0	150J	Si	DO4Ø
125	BYX46-500	500	200n	1.0	30		165J	Si	DO4Ø
126	R3020506NW	500	200n	1.0	30	2.0	150C	SiΔ	DO4Ø
127	R4020530NW	500	200n	1.0	30	3.0	150C	Si	DO5Ø
128	RG3H	500	200n	1.0	3.0		175	Si	A249d
129	RP300H	500	200n	1.0	30		175	Si	A3ac
130	1N5189	500	350n	1		1	175A	Si	A146e
131	MB339	500	350n	1.0		1.0	175A	Si	A248f
132	MB370	500	350n	1.0		1.0	175A	Si	A248f
133	MR816	500	350n	1.0	30	3.0	150J		A383
134	UTR2350	500	350n	1.0		1.0	175	Si	A380a
135	684-5	500	500n	1.0		1.0	150		C244f
136	BYX66-500	500	500n	1.0	30	2.0		Si	DO4
137	BYX67-500	500	500n	1.0	30	2.0		Si	DO5
138	BYX55-600	500	750n	1.0	50		125J	SiΔ	A283a
139▼	S1-600-50	600	50n	1.0	600	1.0	175J	Si	u5b
140▼	S3-600-50	600	50n	1.0	600	1.0	175J	Si	u5c
141	70HFL60S02	600	60n	1.0	30		125J		DO5
142	MUR860	600	60n	1.0			175J		Y220AC
143	MUR1560	600	60n	1.0			175J		Y220AC
144	40HFL60S02	600	70n	1.0	30		125J		DO5
145	MX2160	600	80n	1.0		1.0	175A	Si	A248f
146	MX3160	600	80n	1.0		1.0	175A	Si	A248f
147	16FL60S02	600	90n	1.0	30		150J		DO4
148	12FL60S02	600	100n	1.0	30		150J		DO4
149	BYT12-600	600	100n	1.0	30		150J	#	DO4
150	BYT12P600	600	100n	1.0	30		150J	#	TO220AB
151	BYT12P800	600	100n	1.0	30		150J	#	TO220AB
152	BYT12PI-600(A)								
		600	100n	1.0	30		150J		Y220AB
153	6FL60S02	600	110n	1.0	30		150J		DO4
154	BYT30-600(A)								
		600	110n	1.0	30		150J		DO5
155	BYT30P600	600	110n	1.0	30		150J		C262
156	BYT30PI-600(A)								
		600	110n	1.0	30		150J		M1303
157	388M	600	120n	1.0	30		150A	Si	DO15
158	70HFL60S05	600	150n	1.0	30		125J		DO5
159	BY233-600	600	150n	1.0	30		150J	#	TO220AB
160	DSD12-06A	600	150n	1.0			150J		DO4Ø
161	SKN2F17/06	600	150n	1.0	30	1.0	150J	Si	S187e
162	SKR2F17/06	600	150n	1.0	30	1.0	150J	Si	S187e
163	SPD6F	600	150n	1.0	30		175J	Si	A60v
164	40HFL60S05	600	180n	1.0	30		125J		DO5
165	1N4937	600	200n	1	30		150A	Si	A398c
166	12JG11	600	200n	1.0	30		75C	Si	S471
167	12JH11	600	200n	1.0	30		75C	Si	S471
168	30JG11	600	200n	1.0	30		150J	Si	S19ac
169	363M	600	200n	1.0	30		150A	Si	A3ad
170	BY218-600	600	200n	1.0	30	2.0		Si	DO27
171	BYX30-600	600	200n	1.0	30	2.0	140J	Si	DO4Ø
172	BYX46-600	600	200n	1.0	30		165J	Si	DO4Ø
173	BYX62-600	600	200n	1.0	30		150J	SiΔ	DO4
174	BYX63-600	600	200n	1.0	30		150J	SiΔ	DO5
175	BYX64-600	600	200n	1.0	30		150J	SiΔ	DO5
176	ESM244-600	600	200n	1.0	30		165J	Si	DO5Ø
177	GI826	600	200n	1.0	30		175A	Si	A1eg
178	GI856	600	200n	1.0	3.0		90A		
179	MF12-600	600	200n	1.0			125J	Si	DO4
180	MF35-600	600	200n	1.0		1.0	125	Si	DO5
181	MF70-600	600	200n	1.0			75H	Si	DO5
182	MR836	600	200n	1.0	30	2.0	150J	Si	A179c
183	MR856	600	200n	1.0	30	2.0	175J		A282
184	MR856Ø	600	200n	1.0	30	10u	150J	Si	DO27
185	MR866	600	200n	1.0	30	3.0	160J		DO5
186	MR876	600	200n	1.0	30	3.0	160J		DO5
187	MR1366	600	200n	1.0	30	2.0	150J	Si	DO4
188	MR1376	600	200n	1.0	30	2.0	150J	Si	DO4
189	MR1386	600	200n	1.0	30	3.0	150J	Si	DO5
190	MR1396	600	200n	1.0	30	2.0	150J	Si	DO5
191	PFR856	600	200n	1.0	30			Si	DO27
192	R716X	600	200n	1.0		2.0	150J	Si	TO3ØØ
193	R3020606NW	600	200n	1.0	30	2.0	150C	SiΔ	DO4Ø
194	R4020630NW	600	200n	1.0	30	3.0	150C	Si	DO5Ø
195	RAR2406	600	200n	1.0	30	4.0	150		M1228
196▼	S3-600-200	600	200n	1.0	600	1.0	175J	Si	u5c
197	SKN2F50/06	600	200n	1.0	30	1.0	150J	Si	S565
198	SKR2F50/06	600	200n	1.0	30	1.0	150J	Si	S565
199▼	SM4937	600	200n	1.0	30		175A	Si	F149
200	V336X	600	200n	1.0		2.0	135J	Si	A1zz
201	V356X	600	200n	1.0		2.0	135J	Si	A1zz
202	16FL60S05	600	225n	1.0	30		150J		DO4
203	1N4946	600	250n	1.0		250m	175A	Si	A1tc
204	9MF2A600	600	250n	1.0		1.0	150A		A435
205	12FL60S05	600	250n	1.0	30		150J		DO4
206▼	MF2A600	600	250n	1.0			150J	Si	DO1Ø
207	MF2A600F	600	250n	1.0		1.0	150J		A89d
208	MF10-600	600	250n	1.0			150A	Si	DO4
209	PR1005	600	250n	1.0	30	10u	150J	Si	DO41
210	PR3005	600	250n	1.0	30	2.0	175J	Si	DO27
211	SKN3F20/06	600	250n	1.0	30	1.0	150J		S565
212	SKR3F20/06	600	250n	1.0	30	1.0	150J		S565
213	70HFL60S10	600	290n	1.0	30		125J		DO5
214	ESM765-600	600	300n	1.0	30		150	Si	M774
215	PLR816	600	300n	1.0	30			Si	A344r
216	PY55-600	600	300n	1.0	50			Si	A1bg
217♦	RTF60	600	300n	1.0	30		140J	Si	TO220AB

SYMBOLS AND CODES EXPLAINED IN INTERPRETER

4. HIGH-SPEED DIODES - Fast Recovery/Switching (Cont'd)

IN ORDER OF: (1) IF TEST (2) PIV (3) trr & (4) & VF & (5) TYPE NUMBER

LINE No.	5 TYPE NO.	2 PIV (V)	3 RECOVERY TIME trr (s)	TEST CONDITIONS 1 IF (A)	4 VR (V)	IR (A)	MAX. TEMP (°C)	MAT.	DRAWING NO.
1	9MF2B600	600	350n	1.0		1.0	150A		A435
2	9MF10B600	600	350n	1.0			150C		S436
3	9MF10B600R	600	350n	1.0			150C		S436
4	40HFL60S10	600	350n	1.0	30		125J		DO5
5	GR612	600	350n	1.0	30		150J	Si	DO4
6▼	MF2B600	600	350n	1.0			150J	Si	DO1Ø
7	MF2B600F	600	350n	1.0		1.0	150J		A89d
8	16FL60S10	600	390n	1.0	30		150J		DO4
9	BY277-600R	600	400n	1.0	30		125J	Si△	M754
10	MB340	600	400n	1.0		1.0	175A	Si	A248f
11	MB371	600	400n	1.0		1.0	175A	Si	A248f
12	S8-06FR	600	400n	1.0		1.0	150J	Si	S19m
13	S20-06FR	600	400n	1.0		1.0	150J	Si	S19p
14	SKE4F2/06	600	400n	1.0		1.0	130J	Si	M571c
15	SKE4G2/06	600	400n	1.0		1.0	130J	Si	M571c
16	SKN4F20/06	600	400n	1.0		1.0	130J	Si	DO4Ø
17	SKN4F40/06	600	400n	1.0		1.0	130J	Si	DO5Ø
18	UTR2360	600	400n	1.0		1.0	175A	Si	A380a
19	12FL60S10	600	430n	1.0	30		150J		DO4
20	10DF6	600	500n	1.0		10m	150J	Si	Alaaw
21	684-6	600	500n	1.0		1.0	150		C244f
22	BYX66-600	600	500n	1.0	30		150A	Si△	DO4Ø
23	BYX67-600	600	500n	1.0	30		150A	Si△	DO5Ø
24	ESM245-600	600	500n	1.0	30		165J	Si	DO5Ø
25	MF41-600	600	500n	1.0			150A	Si	DO5Ø
26	GI816	600	750n	1.0	30		175A	Si	DO15
27	GI916	600	750n	1.0	30		175A	Si	DO201
28	SK4F4/06	600	900n	1.0			130J	Si	A277m
29	SK4G4/06	600	900n	1.0			130J	Si	A277m
30	MF71-600	600	1.0u	1.0			150J	Si	DO5Ø
31♦	MR2406F	600	200u	1.0	30	4.0	175J	Si	M1339
32♦	MR826	600	150	1.0	30	2.0	175J		A264
33▼	1N4937G	600	200	1.0	30		175A	Si	D041
34	MUR870	700	100n	1.0			175J		Y220AC
35	BYX66-700	700	500n	1.0	30	2.0		Si	DO4
36	BYX67-700	700	500n	1.0	30	2.0		Si	DO5
37	1N5434	720	400n	1.0		1.0	175A	Si	A146k
38	BY277-750R	750	400n	1.0	30		125J	Si△	M754
39▼	S1-800-50	800	50n	1.0	800	1.0	175J	Si	u5b
40▼	S3-800-50	800	50n	1.0	800	1.0	175J	Si	u5c
41♦	BYT12-800	800	100n	1.0	30		150J	#	DO4
42♦	BYT12PI-800(A)								
		800	100n	1.0	30		150J		Y220AB
43	MUR880	800	100n	1.0			175J		Y220AC
44	BYT30-800(A)								
		800	110n	1.0	30		150J		DO5
45	BYT30P800	800	110n	1.0	30		150J		C262
46	BYT30PI-800(A)								
		800	110n	1.0	30		150J		M1303
47	70HFL80S05	800	150n	1.0	30		125J		DO5
48	DSD12-08A	800	150n	1.0			150J		DO4Ø
49	SKN2F17/08	800	150n	1.0	30	1.0	150J	Si	S187e
50	SKR2F17/08	800	150n	1.0	30	1.0	150J	Si	S187e
51	40HFL80S05	800	180n	1.0	30		125J		DO5
52	BYT67-800	800	200n	1.0	30		150J	#	DO5
53	GI828	800	200n	1.0	30	2.0	175		A1eg
54	MF12-800	800	200n	1.0			125J	Si	DO4
55	MF35-800	800	200n	1.0		1.0	125	Si	DO5
56	MF70-800	800	200n	1.0			75H	Si	DO5
57▼	S3-800-200	800	200n	1.0	800	1.0	175J	Si	u5c
58	SKN2F50/08	800	200n	1.0	30	1.0	150J	Si	S565
59	SKR2F50/08	800	200n	1.0	30	1.0	150J	Si	S565
60	16FL80S05	800	225n	1.0	30		150J		DO4
61	1N4947	800	250n	1.0		250m	175A	Si	A1tc
62	12FL80S05	800	250n	1.0	30		150J		DO4
63	BYT95D	800	250n	1.0	30		175J	Si	A333c
64	MF2A800	800	250n	1.0			150A	Si	DO1Ø
65	MF10-800	800	250n	1.0			150A	Si	DO4
66	SKN3F20/08	800	250n	1.0	30	1.0	150J		S565
67	SKR3F20/08	800	250n	1.0	30	1.0	150J		S565
68	70HFL80S10	800	290n	1.0	30		125J		DO5
69	ESM765-800	800	300n	1.0	30		150	Si	M774
70	PLR817	800	300n	1.0	30			Si	A344r
71	9MF2B800	800	350n	1.0		1.0	150A		A435
72	9MF10B800	800	350n	1.0			150C		S436
73	9MF10B800R	800	350n	1.0			150C		S436
74	40HFL80S10	800	350n	1.0	30		125J		DO5
75	BYX62-800	800	350n	1.0	30	2.0		Si	DO4
76	GR812	800	350n	1.0	30		150J	Si	DO4
77	MF2B800	800	350n	1.0			150A	Si	DO1Ø
78	MF2B800F	800	350n	1.0		1.0	150J		A89d
79	MR817	800	350n	1.0	30	3.0	150J		A383
80	16FL80S10	800	390n	1.0	30		150J		DO4
81♦	BYT71-800	800	400n	1.0	30		125J	Si	TO220AB
82	SKE4F2/08	800	400n	1.0		1.0	130J	Si	M571c
83	SKN4F40/08	800	400n	1.0		1.0	130J	Si	DO5Ø
84	12FL80S10	800	430n	1.0	30		150J		DO4
85	BYX66-800	800	500n	1.0	30		150A	Si△	DO4Ø
86	BYX67-800	800	500n	1.0	30		150A	Si△	DO5Ø
87	ESM245-800	800	500n	1.0	30		165J	Si	DO5Ø
88	MF41-800	800	500n	1.0			150J	Si	DO5Ø
89	GI817	800	750n	1.0	30		175A	Si	DO15
90	GI917	800	750n	1.0	30		175A	Si	DO201
91	S8-08FR	800	800n	1.0		1.0	150J	Si	S19m
92	S20-08FR	800	800n	1.0		1.0	150J	Si	S19p
93	SK4F4/08	800	900n	1.0			130J	Si	A277m
94	SK4G4/08	800	900n	1.0			130J	Si	A277m
95	MF71-800	800	1.0u	1.0			150J	Si	DO5Ø
96	SKN1M20/08	800	1.0u	1.0		1.0	150J	Si	DO4Ø
97	SKN1M40/08	800	1.0u	1.0		1.0	150J	Si	DO5Ø
98	12F80B	800	5.0u	1.0	30		200J	Si	S19yØ
99	MUR890	900	100n	1.0			175J		Y220AC
100	BYX66-900	900	500n	1.0	30	2.0		Si	DO4
101	BYX67-900	900	500n	1.0	30	2.0		Si	DO5
102▼	S1-1000-50	1.0k	50n	1.0	1.0k	1.0	175J	Si	u5b
103▼	S3-1000-50	1.0k	50n	1.0	1.0k	1.0	175J	Si	u5c
104	MUR8100	1.0k	100n	1.0			175J		Y220AC
105	BYT12-1000(A)								
		1.0k	135n	1.0	30		150J		DO4
106	BYT12P-1000(A)								
		1.0k	135n	1.0	30		150J		Y220AB
107	BYT12PI-1000(A)								
		1.0k	135n	1.0	30		150J		Y220AB
108	BYT30-1000(A)								
		1.0k	145n	1.0	30		150J		DO5
109	BYT30P-1000(A)								
		1.0k	145n	1.0	30		150J		M1303
110	BYT30PI-1000(A)								
		1.0k	145n	1.0	30		150J		M1303
111	70HFL100S05	1.0k	150n	1.0	30		125J		DO5
112	SKN2F17/10	1.0k	150n	1.0	30	1.0	150J	Si	S187e
113	SKR2F17/10	1.0k	150n	1.0	30	1.0	150J	Si	S187e
114	40HFL100S05	1.0k	180n	1.0	30		125J		DO5
115	BYT67-1000	1000	200n	1.0	30		150J	#	DO5
116♦	MF12-1000	1.0k	200n	1.0			125J	Si	DO4
117	MF35-1000	1.0k	200n	1.0		1.0	125	Si	DO5
118▼	S3-1000-200	1.0k	200n	1.0	1.0k	1.0	175J	Si	u5c
119	SKN2F50/10	1.0k	200n	1.0	30	1.0	150J	Si	S565
120	SKR2F50/10	1.0k	200n	1.0	30	1.0	150J	Si	S565
121	16FL100S05	1.0k	225n	1.0	30		150J		DO4
122	BYT95E	1.0k	250n	1.0	30		175J	Si	A333c
123	SKN3F20/10	1.0k	250n	1.0	30	1.0	150J		S565
124	SKR3F2/10	1.0k	250n	1.0	30	1.0	130J	Si	S187e
125	SKR3F20/10	1.0k	250n	1.0	30	1.0	150J		S565
126	SKR3F20/12	1.0k	250n	1.0	30	1.0	150J		S565
127	70HFL100S10	1.0k	290n	1.0	30		125J		DO5
128	PLR818	1.0k	300n	1.0	30			Si	A344r
129	40HFL100S10	1.0k	350n	1.0	30		125J		DO5
130	MR818	1.0k	350n	1.0	30	3.0	150J		A383
131	16FL100S10	1.0k	390n	1.0	30		150J		DO4
132	SKE4F2/10	1.0k	400n	1.0		1.0	130J	Si	M571c
133	12FL100S10	1.0k	430n	1.0	30		150J		DO4
134	1N4948	1.0k	500n	1.0		250m	175A	Si	A1tc
135	BYX66-1000	1.0k	500n	1.0	30		150A	Si△	DO4Ø
136	BYX67-1000	1.0k	500n	1.0	30		150A	Si△	DO5Ø
137	ESM245-1000	1.0k	500n	1.0	30		165J	Si	DO5Ø
138	ESM245-1000R								
		1000	500n	1.0	30		165J		DO5
139	MF41-1000	1.0k	500n	1.0			150J	Si	DO5Ø
140	PR3007	1.0k	500n	1.0	30	2.0	175J	Si	DO27
141	GI818	1.0k	750n	1.0	30		175A	Si	DO15
142	GI918	1.0k	750n	1.0	30		175A	Si	DO201
143	SK4F4/10	1.0k	900n	1.0			130J	Si	A277m
144	SK4G4/10	1.0k	900n	1.0			130J	Si	A277m
145	MF71-1000	1.0k	1.0u	1.0			150J	Si	DO5Ø
146	SKN1M20/10	1.0k	1.0u	1.0		1.0	150J	Si	DO4Ø
147	SKN1M40/10	1.0k	1.0u	1.0		1.0	150J	Si	DO5Ø
148	12F100B	1.0k	5.0u	1.0	30		200J	Si	S19yØ
149▼	BY228/13	1.0k	20u	1.0		200u	140J	Si	A333e
150♦	MF12-1200	1.2k	200n	1.0			125J	Si	DO4
151	MF35-1200	1.2k	200n	1.0		1.0	125	Si	D05
152	MF70-1000	1.2k	200n	1.0			75H	Si	DO5
153	MF70-1200	1.2k	200n	1.0			75H	Si	DO5
154	SKN3F20/12	1.2k	250n	1.0	30	1.0	150J		S565
155	SKR3F2/12	1.2k	250n	1.0	30	1.0	130J	Si	S187e
156	DSD12-12A	1.2k	500n	1.0	1.2k		150	Si	
157	DSD17-12B	1.2k	500n	1.0			150J	Si	S187eØ
158	DSD35-12A	1.2k	500n	1.0	1.2k		150	Si	
159	MF41-1200	1.2k	500n	1.0			150J	Si	DO5Ø
160	MF71-1200	1.2k	1.0u	1.0			150J	Si	DO5Ø
161	SKN1M20/12	1.2k	1.0u	1.0		1.0	150J	Si	DO4Ø
162	SKN1M40/12	1.2k	1.0u	1.0		1.0	150J	Si	DO5Ø
163	SKN4M600/12	1.2k	4.0u	1.0		1.0	140J	Si	C246c
164▼	BY228/15	1.2k	20u	1.0		200u	140J	Si	A333e
165	BY438	1.2k	20u	1.0			140J	Si	A333c
166	DSD12-14A	1.4k	500n	1.0	1.4k		150	Si	
167	SKN1M40/14	1.4k	1.0u	1.0		1.0	150J	Si	DO5Ø
168	SKN4M600/14	1.4k	4.0u	1.0		1.0	140J	Si	C246c
169	HVC15F	1.5k	200n	1.0		2.0	100A	Si*△	A1ey
170	DSD12-16A	1.6k	500n	1.0			150J	Si	DO4Ø
171	SKN4M600/16	1.6k	4.0u	1.0		1.0	140J	Si	C246c
172	SKN4M600/18	1.8k	4.0u	1.0		1.0	140J	Si	C246c
173	HVC20F	2.0k	200n	1.0		2.0	100A	Si*△	A1ey
174	VC20X	2.0k	300n	1.0		2.0	125A	Si△	M430
175	SKN4M600/20	2.0k	4.0u	1.0		1.0	140J	Si	C246c
176	SKN4M600/22	2.2k	4.0u	1.0		1.0	140J	Si	C246c
177	SKN4M600/24	2.4k	4.0u	1.0		1.0	140J	Si	C246c
178	HVC25F	2.5k	200n	1.0		2.0	100A	Si*△	A1ey
179	UDD2.5	2.5k	500n	1.0		1.0	150		S542
180	UDF2.5	2.5k	500n	1.0		1.0	150		S542
181	UFB2.5	2.5k	500n	1.0		1.0	150		S543
182	UGF2.5	2.5k	500n	1.0		1.0	150		S293
183	VC30X	3.0k	300n	1.0		2.0	125A	Si△	M430
184	VC40X	4.0k	300n	1.0		2.0	125A	Si△	M430
185	VC50X	5.0k	300n	1.0		2.0	125A	Si△	M430
186	UDC5	5.0k	500n	1.0		1.0	150		S542
187	UDD5	5.0k	500n	1.0		1.0	150		S542
188	UDF5	5.0k	500n	1.0		1.0	150		S542
189	UFB5	5.0k	500n	1.0		1.0	150		S543
190	UFS5	5.0k	500n	1.0		1.0	150		S543
191	UGD5	5.0k	500n	1.0		1.0	150		S293
192	UGF5	5.0k	500n	1.0		1.0	150		S293
193	VC60X	6.0k	300n	1.0		2.0	125A	Si△	M430
194	VC70X	7.0k	300n	1.0		2.0	125A	Si△	M430
195	UDC7.5	7.5k	500n	1.0		1.0	150		S542
196	UDD7.5	7.5k	500n	1.0		1.0	150		S542
197	UFB7.5	7.5k	500n	1.0		1.0	150		S543
198	UFS7.5	7.5k	500n	1.0		1.0	150		S543
199	UGD7.5	7.5k	500n	1.0		1.0	150		S293
200	UGF7.5	7.5k	500n	1.0		1.0	150		S293
201	VC80X	8.0k	300n	1.0		2.0	125A	Si△	M430
202	UDC10	10k	500n	1.0		1.0	150		S542
203	UFS10	10k	500n	1.0		1.0	150		S543
204	UGD10	10k	500n	1.0		1.0	150		S293
205	UDC15	15k	500n	1.0		1.0	150		S542
206	15DF4	400	150n	1.3		10m	150J	Si	Alaav
207	15DF6	600	150n	1.3		10m	150J	Si	Alaav
208	1N5898	50	5.0u	1.5		3.0	150A	Si	
209	1N5899	100	5.0u	1.5		3.0	150A	Si	

SYMBOLS AND CODES EXPLAINED IN INTERPRETER

4. HIGH-SPEED DIODES - Fast Recovery/Switching (Cont'd)

IN ORDER OF: (1) IF TEST (2) PIV
(3) trr & (4) & VF & (5) TYPE NUMBER

LINE No.	5 TYPE NO.	2 PIV (V)	RECOVERY TIME 3 trr (s)	TEST CONDITIONS 1 IF (A)	4 VR (V)	IR (A)	MAX. TEMP (°C)	MAT.	DRAWING NO.
1	1N5900	200	5.0u	1.5		3.0	150A	Si	
2	1N5901	400	5.0u	1.5		3.0	150A	Si	
3	1N5902	600	5.0u	1.5		3.0	150A	Si	
4	1N5903	800	5.0u	1.5		3.0	150A	Si	
5	1N5904	1.0k	5.0u	1.5		3.0	150A	Si	
6	1N5905	1.2k	5.0u	1.5		3.0	150A	Si	
7	5BL41	100	45n	2.0			110C	Si	M981
8	15BL11	100	60n	2.0			100C	Si	S555
9	30BL11	100	60n	2.0			90C	Si	S555
10	5CL41	150	45n	2.0			110C	Si	M981
11	15CL11	150	60n	2.0			100C	Si	S555
12	30CL11	150	60n	2.0			90C	Si	S555
13	5DL41	200	45n	2.0			110C	Si	M981
14	15DL11	200	60n	2.0			100C	Si	S555
15	30DL11	200	60n	2.0			90C	Si	S555
16	BYX71-350	350	450n	2.0	30		150J		M754Ø
17	BYX71-600	600	450n	2.0	30		150J		M754Ø
18	BYW19-800	800	450n	2.0	30		150J	Si△	M754Ø
19	BY229-1000	1.0k	450n	2	30		150J		Y220a
20	BYW19-1000	1.0k	450n	2.0	30		150J	Si△	M754Ø
21	S3S3M	30	110n	3.0			125J	Si♦	A395b
22	S3S4M	40	110n	3.0			125J	Si♦	A395b
23	SPD2005T	50	150n	3.0	30	3.0	200A	Si$#	TO3
24	SPD2010T	100	150n	3.0	30	3.0	200A	Si$#	TO3
25	SPD2020	200	150n	3.0	30	3.0	200A	Si$#	DO5
26	SPD2020T	200	150n	3.0	30	3.0	200A	Si$#	TO3
27	SPD2030	300	150n	3.0	30	3.0	200A	Si$#	DO5
28	SPD2030T	300	150n	3.0	30	3.0	200A	Si$#	TO3
29	BY223	1.5k	20u	4.0			125J	Si△	M754
30♦	15SB03S	30	100n	5.0			94C	Si♦	S103
31♦	30SB03SA	30	100n	5.0			82C	Si♦	S102
32♦	40SB03SA	30	100n	5.0			81C	Si♦	S102
33	10FWJ2C11	30	200n	5.0			131C	Si	M1208
34♦	60SB03S	30	200n	5.0			78C	Si♦	S527
35♦	15SB04S	40	100n	5.0			94C	Si♦	S103
36♦	30SB04SA	40	100n	5.0			82C	Si♦	S102
37♦	40SB04SA	40	100n	5.0			81C	Si♦	S102
38	10GWJ2C11	40	200n	5			131C	Si	
39♦	60SB04S	40	200n	5.0			78C	Si♦	S527
40♦	6FH05S	50	200n	5.0			105C	Si	S103
41♦	6RH05S	50	200n	5.0			105C	Si	S103
42♦	12FH05S	50	200n	5.0			100C	Si	S103
43♦	12RH05S	50	200n	5.0			10	Si	S103
44♦	30RH05S	50	200n	5.0			100C	Si	S102
45	5KF10(B)	100	100n	5.0			150J	Si	Y220AC
46	C10P10F(R)	100	100n	5.0			125J	Si	Y220AB
47♦	6FH1S	100	200n	5.0			10	Si	S103
48♦	6RH1S	100	200n	5.0			10	Si	S103
49♦	12FH1S	100	200n	5.0			10	Si	S103
50♦	12RH1S	100	200n	5.0			10	Si	S103
51♦	30FH1S	100	200n	5.0			10	Si	S102
52	30RH1S	100	200n	5.0			10	Si	S102
53	R3030106NW	100	200n	5.0	100	5.0	150C	Si	DO4
54	SR10C2S	100	240n	5.0	50		150J	Si△	S249aØ
55	5KF20(B)	200	100n	5.0			150J	Si	Y220AC
56	C10P20F(R)	200	100n	5.0			125J	Si	Y220AB
57♦	6FH2S	200	200n	5.0			105C	Si	S103
58♦	6RH2S	200	200n	5.0			105C	Si	S103
59♦	12FH2S	200	200n	5.0			100C	Si	S103
60♦	12RH2S	200	200n	5.0			100C	Si	S103
61♦	30FH2S	200	200n	5.0			100C	Si	S102
62♦	30RH2S	200	200n	5.0			100C	Si	S102
63	R3030206NW	200	200n	5.0	100	5.0	150C	Si	DO4
64	SR10C4S	200	240n	5.0	100		150J	Si△	S249aØ
65♦	6FH3S	300	200n	5.0			105C	Si	S103
66♦	6RH3S	300	200n	5.0			105C	Si	S103
67♦	12FH3S	300	200n	5.0			100C	Si	S103
68♦	12RH3S	300	200n	5.0			100C	Si	S103
69♦	30FH3S	300	200n	5.0			100C	Si	S102
70♦	30RH3S	300	200n	5.0			100C	Si	S102
71	R3030306NW	300	200n	5.0	150	5.0	150C	Si	DO4
72♦	6FH4S	400	200n	5.0			105C	Si	S103
73♦	6RH4S	400	200n	5.0			105C	Si	S103
74♦	12FH4S	400	200n	5.0			100C	Si	S103
75♦	12RH4S	400	200n	5.0			100C	Si	S103
76♦	30FH4S	400	200n	5.0			100C	Si	S102
77♦	30RH4S	400	200n	5.0			100C	Si	S102
78	R3030406NW	400	200n	5.0	200	5.0	150C	Si	DO4
79	SR10C8S	400	240n	5.0	200		150J	Si△	S249aØ
80▼	FRP1605CC	50	50n	8.0	50	2.5	150J	Si	TO220AB
81▼	FRP1610CC	100	50n	8.0	100	2.5	150J	Si	TO220AB
82	C16P10F(R)	100	100n	8.0			125J	Si	TO247
83▼	FRP1615CC	150	50n	8.0	150	2.5	150J	Si	TO220AB
84▼	FRP1620CC	180	50n	8.0	180	2.5	150J	Si	TO220AB
85	C16P20F(R)	200	100n	8.0			125J	Si	TO247
86	FS36	30		10		500m	70A	GeØ	DO7
87	MA150	35	10n	10	1.0	1.0	200S	Si	A24d
88	MA161	50	4.0n	10	1.0	1.0	200S	Si	A24d
89▼	FRP1005	50	50n	10	50	2.5	150J	Si	TO220AC
90▼	FRP2005CC	50	50n	10	50	2.5	150J	Si	TO220AB
91	RP300A	50	200n	10	30	2.0	175	Si	A3ac
92	MA162	75	4.0n	10	1.0	1.0	200S	Si	A24d
93▼	FRP1010	100	50n	10	100	2.5	150J	Si	TO220AC
94▼	FRP2010CC	100	50n	10	100	2.5	150J	Si	TO220AB
95	RP300B	100	200n	10	30	2.0	175	Si	A3ac
96	1N3958C	100	1.5u	10			165A	Si	DO4
97	1N3958	100	3.0u	10		900m	165C	Si	DO4
98▼	FRP1015	150	50n	10	150	2.5	150J	Si	TO220AC
99▼	FRP2015CC	150	50n	10	150	2.5	150J	Si	TO220AB
100▼	FRP1020	180	50n	10	180	2.5	150J	Si	TO220AC
101▼	FRP2020CC	180	50n	10	180	2.5	150J	Si	TO220AB
102	RP300D	200	200n	10	30	2.0	175	Si	A3ac
103	DSD17-02B	200	300n	10		250m	150J	Si	S187eØ
104	1N3959C	200	1.5u	10			165A	Si	DO4
105	1N3959	200	3.0u	10		900m	165C	Si	DO4
106	1N3960C	300	1.5u	10			165A	Si	DO4
107	1N3960	300	3.0u	10		900m	165C	Si	DO4
108	RP300G	400	200n	10	30	2.0	175	Si	A3ac
109	DSD17-04B	400	300n	10		250m	150J	Si	S187eØ
110	1N3961C	400	1.5u	10			165A	Si	DO4
111	1N3961	400	3.0u	10		900m	165C	Si	DO4
112	1N3962C	500	1.5u	10			165A	Si	DO4
113	1N3962	500	3.0u	10		900m	165C	Si	DO4
114	RP300J	600	200n	10	30	2.0	175	Si	A3ac
115	DSD17-06B	600	500n	10		250m	150J	Si	S187eØ
116	1N3963C	600	1.5u	10			165A	Si	DO4
117	1N3963	600	3.0u	10		900m	165C	Si	DO4
118	BYW25	800	450n	10	30		150J	Si	DO5Ø
119	DSD17-08B	800	500n	10		250m	150J	Si	S187eØ
120	RP300K	800	500n	10	30	2.0	175	Si	A3ac
121	BYV24-800	800	1.0u	10	30		150J		DO4Ø
122	RP300M	1.0k	500n	10	30	2.0	175	Si	A3ac
123	BYV24-1000	1.0k	1.0u	10	30		150J		DO4Ø
124	DSD17-14B	1.4k	1.0u	10		250m	150J	Si	S187eØ
125	DSD17-16B	1.6k	1.0u	10		250m	150J	Si	S187e
126	40SL05	50	200n	12			150J		A52m
127	40SL1	100	200n	12			150J		A52m
128	40SL2	200	200n	12			150J		A52m
129	40SL3	300	200n	12			150J		A52m
130	40SL4	400	200n	12			150J		A52m
131	40SL5	500	200n	12			150J		A52m
132	40SL6	600	200n	12			150J		A52m
133	S15S3	30	150n	15				Si♦	S4ae
134	15FWJ11	30	200n	15			131C	Si	S555
135	30FWJ2C12	30	200n	15			131C	Si	M1149
136	S15S4	40	150n	15				Si♦	S4ae
137	15GWJ11	40	200n	15			131C	Si	S555
138	30GWJ2C12	40	200n	15			131C	Si	
139	5D50FS	50	300n	15			175J	Si	A298an
140	6D50FS	50	300n	15			175J	Si	A298an
141	NS10000	50	300n	15			175J	Si	DO4
142	NS12000	50	300n	15			175J	Si	DO4
143	NS15000	50	300n	15			175J	Si	DO4
144	NS20000	50	300n	15			175J	Si	DO4
145	NS22000	50	300n	15			175J	Si	DO4
146	NSD30000	50	300n	15			175J	Si	DO5
147	NSD35000	50	300n	15			175J	Si	DO5
148	NSD40000	50	300n	15			175J	Si	DO5
149	NSD50000	50	700n	15			175J	Si	DO5
150	15BG15	100	60n	15			127C	Si	S555
151	5D100FS	100	300n	15			175J	Si	A298an
152	6D100FS	100	300n	15			175J	Si	A298an
153	NS10001	100	300n	15			175J	Si	DO4
154	NS12001	100	300n	15			175J	Si	DO4
155	NS15001	100	300n	15			175J	Si	DO4
156	NS20001	100	300n	15			175J	Si	DO4
157	NS22001	100	300n	15			175J	Si	DO4
158	NSD30001	100	300n	15			175J	Si	DO5
159	NSD35001	100	300n	15			175J	Si	DO5
160	NSD40001	100	300n	15			175J	Si	DO5
161	NSD50001	100	700n	15			175J	Si	DO5
162	15CG15	150	60n	15			127C	Si	S555
163	15DG15	200	60n	15			127C	Si	S555
164	5D200FS	200	300n	15			175J	Si	A298an
165	6D200FS	200	300n	15			175J	Si	A298an
166	NS10002	200	300n	15			175J	Si	DO4
167	NS12002	200	300n	15			175J	Si	DO4
168	NS15002	200	300n	15			175J	Si	DO4
169	NS20002	200	300n	15			175J	Si	DO4
170	NS22002	200	300n	15			175J	Si	DO4
171	NSD30002	200	300n	15			175J	Si	DO5
172	NSD35002	200	300n	15			175J	Si	DO5
173	NSD40002	200	300n	15			175J	Si	DO5
174	NSD50002	200	700n	15			175J	Si	DO5
175	5D400FS	400	300n	15			175J	Si	A298an
176	6D400FS	400	300n	15			175J	Si	A298an
177	NS10004	400	300n	15			175J	Si	DO4
178	NS12004	400	300n	15			175J	Si	DO4
179	NS15004	400	300n	15			175J	Si	DO4
180	NS20004	400	300n	15			175J	Si	DO4
181	NS22004	400	300n	15			175J	Si	DO4
182	NSD30004	400	300n	15			175J	Si	DO5
183	NSD35004	400	300n	15			175J	Si	DO5
184	NSD40004	400	300n	15			175J	Si	DO5
185	NSD50004	400	700n	15			175J	Si	DO5
186	5D600FS	600	300n	15			175J	Si	A298an
187	6D600FS	600	300n	15			175J	Si	A298an
188	NS10006	600	300n	15			175J	Si	DO4
189	NS12006	600	300n	15			175J	Si	DO4
190	NS15006	600	300n	15			175J	Si	DO4
191	NS20006	600	300n	15			175J	Si	DO4
192	NS22006	600	300n	15			175J	Si	DO4
193	NSD30006	600	300n	15			175J	Si	DO5
194	NSD35006	600	300n	15			175J	Si	DO5
195	NSD40006	600	300n	15			175J	Si	DO5
196	NSD50006	600	700n	15			175J	Si	DO5
197	5D800FS	800	300n	15			175J	Si	A298an
198	6D800FS	800	300n	15			175J	Si	A298an
199	NS10008	800	300n	15			175J	Si	DO4
200	NS12008	800	300n	15			175J	Si	DO4
201	NS15008	800	300n	15			175J	Si	DO4
202	NS20008	800	300n	15			175J	Si	DO4
203	NS22008	800	300n	15			175J	Si	DO4
204	NSD30008	800	300n	15			175J	Si	DO5
205	NSD35008	800	300n	15			175J	Si	DO5
206	NSD40008	800	300n	15			175J	Si	DO5
207	NSD50008	800	700n	15			175J	Si	DO5
208▼	FRM3205CC	50	50n	16	50	2.5	150J	Si	TO204AA
209▼	FRP1605	50	50n	16	50	2.5	150J	Si	TO220AC
210▼	S16-050-50	50	50n	16	50	1.0	175J	Si	u5d
211▼	S16-050-200	50	200n	16	50	1.0	175J	Si	u5d
212▼	FRM3210CC	100	50n	16	100	2.5	150J	Si	TO204AA
213▼	FRP1610	100	50n	16	100	2.5	150J	Si	TO220AC
214▼	S16-100-50	100	50n	16	100	1.0	175J	Si	u5d
215▼	S16-100-200	100	200n	16	100	1.0	175J	Si	u5d
216▼	FRM3215CC	150	50n	16	150	2.5	150J	Si	TO204AA
217♦	FRP1615	150	50n	16	150	2.5	150J	Si	TO220AC
218▼	FRM3220CC	180	50n	16	180	2.5	150J	Si	TO204AA
219♦	FRP1620	180	50n	16	180	2.5	150J	Si	TO220AC
220▼	S16-200-50	200	50n	16	200	1.0	175J	Si	u5d

SYMBOLS AND CODES
EXPLAINED IN INTERPRETER

4. HIGH-SPEED DIODES - Fast Recovery/Switching (Cont'd)

IN ORDER OF: (1) IF TEST (2) PIV (3) trr & (4) & VF & (5) TYPE NUMBER

LINE No.	5 TYPE NO.	2 PIV (V)	RECOVERY TIME 3 trr (s)	TEST CONDITIONS 1 IF (A)	4 VR (V)	IR (A)	MAX. TEMP (°C)	MAT.	DRAWING NO.
1▼	S16-200-200	200	200n	16	200	1.0	175J	Si	u5d
2▼	S16-400-50	400	50n	16	400	1.0	175J	Si	u5d
3▼	S16-400-200	400	200n	16	400	1.0	175J	Si	u5d
4▼	S16-600-200	600	200n	16	600	1.0	175J	Si	u5d
5▼	S16-800-50	800	50n	16	800	1.0	175J	Si	u5d
6▼	S16-800-200	800	200n	16	800	1.0	175J	Si	u5d
7▼	S16-1000-50	1.0k	50n	16	1.0k	1.0	175J	Si	u5d
8▼	S16-1000-200	1.0k	200n	16	1.0k	1.0	175J	Si	u5d
9	T51A	50	200n	19			150J	Si	S522Ø
10	T52A	50	200n	19			150J	Si	S522Ø
11	HSE7021-RT	50	1.5u	19		19	150J	Si	DO4
12	T51B	100	200n	19			150J	Si	S522Ø
13	T52B	100	200n	19			150J	Si	S522Ø
14	HSE7022-RT	100	1.5u	19		19	150J	Si	DO4
15	T51C	200	200n	19			150J	Si	S522Ø
16	T52C	200	200n	19			150J	Si	S522Ø
17	HSE7023-RT	200	1.5u	19		19	150J	Si	DO4
18	HSE7024-RT	300	1.5u	19		19	150J	Si	DO4
19	HSE7025-RT	400	1.5u	19		19	150J	Si	DO4
20	HSE7026-RT	500	1.5u	19		19	150J	Si	DO4
21	HSE7027-RT	600	1.5u	19		19	150J	Si	DO4
22	1N3874	50	300n	20	30	4.0	150C	Si	DO10
23	S006AADF	50	300n	20		4.0	150J	SiΔ	DO4Ø
24	1N3875	100	300n	20	30	4.0	150C	Si	DO10
25	S00601DF	100	300n	20		4.0	150J	SiΔ	DO4Ø
26	1N3876	200	300n	20	30	4.0	150C	Si	DO10
27	S00602DF	200	300n	20		4.0	150J	SiΔ	DO4Ø
28	1N3877	300	300n	20	30	4.0	150C	Si	DO10
29	S00603DF	300	300n	20		4.0	150J	SiΔ	DO4Ø
30	1N3878	400	300n	20	30	4.0	150C	Si	DO10
31	S00604DF	400	300n	20		4.0	150J	SiΔ	DO4Ø
32	30FWJ11	30	200n	30			131C	Si	S555
33	60FWJ2C11	30	200n	30			131C	Si	M1209
34	D30S3	30	200n	30			125J	Si♦	DO4
35	S30S3A	30	200n	30				Si♦	S19z
36	30GWJ11	40	200n	30			131C	Si	S555
37	60GWJ2C11	40	200n	30			131C	Si	M1209
38	D30S4	40	200n	30			125J	Si♦	DO4
39	S30S4A	40	200n	30				Si♦	S19z
40	30BG15	100	60n	30			126C	Si	S19n
41	30CG15	150	60n	30			126C	Si	S19n
42	30DG15	200	60n	30			126C	Si	S19n
43	DSD35-02A	200	300n	30		250m	150J	Si	S19u
44	DSD35-04A	400	300n	30		250m	150J	Si	S19u
45	DSD35-06A	600	500n	30		250m	150J	Si	S19uØ
46	DSD35-08A	800	500n	30		250m	150J	Si	S19uØ
47	D21S1000C	1.0k	4.0uC	30			100C	Si	S493.
48	D30S1000C	1.0k	7.0uC	30			100C	Si	S493
49	D21S1200C	1.2k	4.0uC	30			100C	Si	S493
50	D30S1200C	1.2k	7.0uC	30			100C	Si	S493
51	DSD35-14A	1.4k	1.0u	30		250m	150J	Si	S19uØ
52	D21S1400C	1.4k	4.0uC	30			100C	Si	S493
53	D30S1400C	1.4k	7.0uC	30			100C	Si	S493
54	DSD35-16A	1.6k	1.0u	30		250m	150J	Si	S19uØ
55♦	1N3879A	50	300n	36	30	4.0	100C	Si	DO4Ø
56♦	1N3880A	100	300n	36	30	4.0	100C	Si	DO4Ø
57♦	1N3881A	200	300n	36	30	4.0	100C	Si	DO4Ø
58♦	1N3882A	300	300n	36	30	4.0	100C	Si	DO4Ø
59♦	1N3883A	400	300n	36	30	4.0	100C	Si	DO4Ø
60	R3020506	500	200n	36			150C	Si	DO4Ø
61	R3020512	500	200n	36			150C	Si	DO4Ø
62	R3020606	600	200n	36			150C	Si	DO4Ø
63	R3020612	600	200n	36			150C	Si	DO4Ø
64	S51A	50	200n	38			150J	Si	S522Ø
65	S52A	50	200n	38			150J	Si	S522Ø
66	HSE7030-RT	50	1.5u	38		38	150J	Si	DO4
67	S51B	100	200n	38			150J	Si	S522Ø
68	S52B	100	200n	38			150J	Si	S522Ø
69	HSE7031-RT	100	1.5u	38		38	150J	Si	DO4
70	S51C	200	200n	38			150J	Si	S522Ø
71	S52C	200	200n	38			150J	Si	S522Ø
72	HSE7032-RT	200	1.5u	38		38	150J	Si	DO4
73	HSE7033-RT	300	1.5u	38		38	150J	Si	DO4
74	HSE7034-RT	400	1.5u	38		38	150J	Si	DO4
75	HSE7035-RT	500	1.5u	38		38	150J	Si	DO4
76	HSE7036-RT	600	1.5u	38		38	150J	Si	DO4
77	1N3884	50	300n	40	30	5.0	150C	Si	DO10
78♦	1N3889A	50	300n	40	30	5.0	100C	Si	DO4Ø
79	S012AADF	50	300n	40		5.0	150J	SiΔ	DO4Ø
80♦	1N3890A	100	300n	40	30	5.0	100C	Si	DO4Ø
81	S01201DF	100	300n	40		5.0	150J	SiΔ	DO4Ø
82♦	1N3891A	200	300n	40	30	5.0	100C	Si	DO4Ø
83	S01202DF	200	300n	40		5.0	150J	SiΔ	DO4Ø
84	1N3887	300	300n	40	30	5.0	150C	Si	DO10
85♦	1N3892A	300	300n	40	30	5.0	100C	Si	DO4Ø
86	S01203DF	300	300n	40		5.0	150J	SiΔ	DO4Ø
87♦	1N3893A	400	300n	40	30	5.0	100C	Si	DO4Ø
88	S01204DF	400	300n	40		5.0	150J	SiΔ	DO4Ø
89	S016AADF	50	225n	50		6.0	150J	SiΔ	DO4Ø
90	S01601DF	100	225n	50		6.0	150J	SiΔ	DO4Ø
91	SM01PCN013	100	600n	50	50		150J	SiΔ	DO4Ø
92	SM01PCN026	100	700n	50	50		150J	SiΔ	DO4Ø
93	S01602DF	200	225n	50		6.0	150J	SiΔ	DO4Ø
94	SM02PCN013	200	600n	50	50		150J	SiΔ	DO4Ø
95	SM02PCN026	200	700n	50	50		150J	SiΔ	DO4Ø
96	SM02PCN024	200	1.5u	50			150J		DO4
97♦	SV1502F	200	35uC	50			150J	Si	DO8
98	KU1002F	200	70uC	50		50	125J	Si	S421
99	S01603DF	300	225n	50		6.0	150J	SiΔ	DO4Ø
100	KU1003F	300	70uC	50		50	125J	Si	S421
101	SM04PCN013	400	600n	50	50		150J	SiΔ	DO4Ø
102	SM04PCN026	400	700n	50	50		150J	SiΔ	DO4Ø
103	SM04PCN024	400	1.5u	50			150J		DO4
104♦	SV1504F	400	35uC	50			150J	Si	D08
105	KU1004F	400	70uC	50		50	125J	Si	S421
106	SM06PCN024	600	1.5u	50			150J		DO4
107♦	SV1506F	600	35uC	50			150J	Si	D08
108	KU1006F	600	70uC	50		50	125J	Si	S421
109	SM08PCN024	800	1.5u	50			150J		DO4
110♦	SV1508F	800	35uC	50			150J	Si	DO8
111	KU1008F	800	70uC	50		50	125J	Si	S421
112♦	SV1510F	1.0k	35nC	50			150J	Si	DO8
113	SM10PCN024	1.0k	1.5u	50			150J		DO4
114	KU1010F	1.0k	70uC	50		50	125J	Si	S421
115♦	KU1012F	1.2k	22uC	50			125J	Si	S241
116♦	SV1512F	1.2k	35uC	50			150J	Si	DO8
117♦	SV1514F	1.4k	35uC	50			150J	Si	DO8
118	60FWJ11	30	200n	60			124C	Si	S19n
119	S60S3	30	225n	60				Si♦	S19z
120	60GWJ11	40	200n	60			124C	Si	S19n
121	S60S4	40	225n	60				Si♦	S19z
122	DFF20B10	1.0k	1.5u	60			125J		M1319
123	DFF20B12	1.2k	1.5u	60			125J		M1319
124	HSE8030-RT	50	1.5u	63		63	150J	Si	DO5
125	HSE8031-RT	100	1.5u	63		63	150J	Si	DO5
126	HSE8032-RT	200	1.5u	63		63	150J	Si	DO5
127	HSE8033-RT	300	1.5u	63		63	150J	Si	DO5
128	HSE8034-RT	400	1.5u	63		63	150J	Si	DO5
129	HSE8035-RT	500	1.5u	63		63	150J	Si	DO5
130	HSE8036-RT	600	1.5u	63		63	150J	Si	DO5
131	1N3899	50	350n	65	30	9.0	150C	Si	DO5Ø
132	1N3904	50	350n	65	30	9.0	150C	Si	DO11
133	S025AADF	50	350n	65		4.0	150J	SiΔ	DO5Ø
134	1N3900	100	350n	65	30	9.0	150C	Si	DO5Ø
135	1N3905	100	350n	65	30	9.0	150C	Si	DO11
136	S02501DF	100	350n	65		4.0	150J	SiΔ	DO5Ø
137	1N3901	200	350n	65	30	9.0	150C	Si	DO5Ø
138	1N3906	200	350n	65	30	9.0	150C	Si	DO11
139	S02502DF	200	350n	65		4.0	150J	SiΔ	DO5Ø
140	1N3902	300	350n	65	30	9.0	150C	Si	DO5Ø
141	1N3907	300	350n	65	30	9.0	150C	Si	DO11
142	S02503DF	300	350n	65		4.0	150J	SiΔ	DO5Ø
143	1N3903	400	350n	65	30	9.0	150C	Si	DO5Ø
144	1N3908	400	350n	65	30	9.0	150C	Si	DO11
145	S02504DF	400	350n	65		4.0	150J	SiΔ	DO5Ø
146	DSD110-12A	1.2k	1.0u	80	1.2k		150	Si	
147	DSD110-14A	1.4k	1.0u	80		250m	150J	Si	S408eØ
148	DSD110-16A	1.6k	1.0u	80		250m	150J	Si	S408eØ
149	15MLA160	1.6k	3.5u	80			125J	Si	S562
150	15MLA180	1.8k	3.5u	80			125J	Si	S562
151	15MLA200	2.0k	3.5u	80			125J	Si	S562
152	P51A	50	200n	95			150J	Si	S521Ø
153	P52A	50	200n	95			150J	Si	S521Ø
154	P51B	100	200n	95			150J	Si	S521Ø
155	P52B	100	200n	95			150J	Si	S521Ø
156	P51C	200	200n	95			150J	Si	S521Ø
157	P52C	200	200n	95			150J	Si	S521Ø
158	S5S3	30	110n	100	30	5.0m	125		
159	S10SC3	30	110n	100	30	5.0m	125		
160	S5S4	40	110n	100	40	5.0m	125		
161	S10SC4	40	110n	100	40	5.0m	125		
162	1N3914	50	350n	100		9.0	150C	Si	DO11
163♦	S035AADF	50	350n	100	30	9.0	150	SiΔ	DO5Ø
164	HSE8040-RT	50	2.5u	100		100	150J	Si	DO5
165	1N3915	100	350n	100		9.0	150C	Si	DO11
166	S03501DF	100	350n	100	30	9.0	150J	SiΔ	DO5Ø
167	SM01PCN046	100	900n	100	50		150J	SiΔ	DO5Ø
168	SM01PCN076	100	1u	100	50		150J	SiΔ	DO5Ø
169	HSE8041-RT	100	2.5u	100		100	150J	Si	DO5
170	BYT75-200	200	300n	100			125	Si	F62m
171	1N3916	200	350n	100		9.0	150C	Si	DO11
172	S03502DF	200	350n	100		9.0	150J	SiΔ	DO5
173	SM02PCN046	200	900n	100	50		150J	SiΔ	DO5Ø
174	SM02PCN076	200	1.0u	100			150J	SiΔ	DO5Ø
175	SM02PCN074	200	2u	100	50		150J	SiΔ	DO5Ø
176	HSE8042-RT	200	2.5u	100		100	150J	Si	DO5
177	S03503DF	300	350n	100	30	9.0	150J	SiΔ	DO5Ø
178	HSE8043-RT	300	2.5u	100		100	150J	Si	DO5
179	BYT75-400	400	300n	100			125	Si	F62m
180	S03504DF	400	350n	100	30	9.0	150J	SiΔ	DO5Ø
181	SM04PCN046	400	900n	100	50		150J	SiΔ	DO5Ø
182	SM04PCN076	400	1u	100	50		150J	SiΔ	DO5Ø
183	SM04PCN074	400	2u	100	50		150J	SiΔ	DO5Ø
184	HSE8044-RT	400	2.5u	100		100	150J	Si	DO5
185	R4020520	500	200n	100			150C	Si	DO5Ø
186	R4020530	500	200n	100			150C	Si	DO5Ø
187	BYT75-500	500	300n	100			125	Si	F62m
188	HSE8045-RT	500	2.5u	100		100	150J	Si	DO5
189	R4020620	600	200n	100			150C	Si	DO5Ø
190	R4020630	600	200n	100			150C	Si	DO5Ø
191	BYT75-600	600	300n	100			125	Si	F62m
192♦	100JH21	600	1.0u	100			125J	Si	M967
193♦	200JH21	600	1.0u	100			125J	Si	M967
194♦	300JH21	600	1.0u	100			125J	Si	M967
195	20MLA60	600	2.0u	100			125J	Si	S527a
196	SM06PCN074	600	2u	100	50		150J	SiΔ	DO5Ø
197	HSE8046-RT	600	2.5u	100		100	150J	Si	DO5
198	20MLA80	800	2.0u	100			125J	Si	S527a
199	SM08PCN074	800	2u	100	50		150J	SiΔ	DO5Ø
200	20MLA100	1.0k	2.0u	100			125J	Si	S527a
201	SM10PCN074	1.0k	2u	100	50		150J	SiΔ	DO5Ø
202	20MLA120	1.2k	2.0u	100			125J	Si	S527a
203	100QH21	1.2k	2.0u	100			125J	Si	M1136
204	DFF50B10	1.0k	1.5u	150			125J		M1320
205	DFF50B12	1.2k	1.5u	150			125J		M1320
206	S055AADF	50	225n	175			150J	SiΔ	DO5
207	S05501DF	100	225n	175			150J	SiΔ	DO5
208	S05502DF	200	225n	175			150J	SiΔ	DO5
209	S05503DF	300	225n	175			150J	SiΔ	DO5
210	ARF612P01	100	4.0u	200			150J	SiΔ	M1136§
211	ARF612S01	100	4.0u	200			150J	SiΔ	M1005♦
212	ESM4116-200	200	300n	200			125	Si	M771
213	ARF612P02	200	4.0u	200			150J	SiΔ	M1136§
214	ARF612S02	200	4.0u	200			150J	SiΔ	M1136♦
215♦	TV2202F	200	70uC	200			150J	Si	DO9
216	ARF612P03	300	4.0u	200			150J	SiΔ	M1136§
217	ARF612S03	300	4.0u	200			150J	SiΔ	M1136♦
218	ESM4116-400	400	300n	200			125	Si	M771
219	ARF612P04	400	4.0u	200			150J	SiΔ	M1136§

SYMBOLS AND CODES EXPLAINED IN INTERPRETER

4. HIGH-SPEED DIODES - Fast Recovery/Switching (Cont'd)

IN ORDER OF: (1) IF TEST (2) PIV
(3) trr & (4) & VF & (5) TYPE NUMBER

LINE No.	5 TYPE NO.	2 PIV (V)	RECOVERY TIME 3 trr (s)	TEST CONDITIONS 1 IF (A)	4 VR (V)	IR (A)	MAX. TEMP (°C)	MAT.	DRAWING NO.
1	ARF612S04	400	4.0u	200			150J	SiΔ	M1136♦
2♦	TV2204F	400	70uC	200			150J	Si	DO9
3	ESM4116-500	500	300n	200			125	Si	M771
4	ARF612P05	500	4.0u	200			150J	SiΔ	M1136§
5	ARF612S05	500	4.0u	200			150J	SiΔ	M1136♦
6	ESM4116-600	600	300n	200			125	Si	M771
7	ESM4120-600	600	800n	200			125	Si	M771
8	ARF612P06	600	4.0u	200			150J	SiΔ	M1136§
9	ARF612P07	600	4.0u	200			150J	SiΔ	M1136§
10	ARF612S06	600	4.0u	200			150J	SiΔ	M1136♦
11	FD200T12	600	50uC	200	100		125B	SiΔ	C248a
12♦	TV2206F	600	70uC	200			150J	Si	DO9
13	ARF612S07	700	4.0u	200			150J	SiΔ	M1136♦
14	ESM4120-800	800	800n	200			125	Si	M771
15	ARF612P08	800	4.0u	200			150J	SiΔ	M1136§
16	ARF612S08	800	4.0u	200			150J	SiΔ	M1005♦
17	FD200T16	800	50uC	200	100		125B	SiΔ	C248a
18♦	TV2208F	800	70uC	200			150J	Si	DO9
19	ESM4120-900	900	800n	200			125	Si	M771
20	ARF612P09	900	4.0u	200			150J	SiΔ	M1136§
21	ARF612S09	900	4.0u	200			150J	SiΔ	M1005♦
22	ESM4120-1000	1.0k	800n	200			125	Si	M771
23	ARF612P10	1.0k	4.0u	200			150J	SiΔ	M1136§
24	ARF612S10	1.0k	4.0u	200			150J	SiΔ	M1005♦
25	FD200T20	1.0k	50uC	200	100		125B	SiΔ	C248a
26♦	TV2210F	1.0k	70uC	200			150J	Si	D09
27	ARF612P11	1.1k	4.0u	200			150J	SiΔ	M1005§
28	ARF612S11	1.1k	4.0u	200			150J	SiΔ	M1005♦
29	200QH21	1.2k	2.0u	200			125J	Si	C242c
30	SSiL4065	1.2k	2.8u	200	800	65		SiΔ	M851
31	ARF612P12	1.2k	4.0u	200			150J	SiΔ	M1005§
32	ARF612S12	1.2k	4.0u	200			150J	SiΔ	M1005♦
33	FD200T24	1.2k	50uC	200	100		125B	SiΔ	C248a
34♦	TV2212F	1.2k	70uC	200			150J	Si	D09
35	ARF612P13	1.3k	4.0u	200			150J	SiΔ	M1005§
36	ARF612S13	1.3k	4.0u	200			150J	SiΔ	M1005♦
37	ARF612P14	1.4k	4.0u	200			150J	SiΔ	M1005§
38	ARF612S14	1.4k	4.0u	200			150J	SiΔ	M1005♦
39♦	TV2214F	1.4k	70uC	200			150J	Si	D09
40	ARF612P15	1.5k	4.0u	200			150J	SiΔ	M1005§
41	ARF612S15	1.5k	4.0u	200			150J	SiΔ	M1005♦
42♦	TV2215F	1.5k	70uC	200			150J	Si	D09
43	45MLA60	600	30uC	220			125J	Si	S435g
44	153PJLA60	600	35uC	220			125J	Si	M1246
45	45MLA80	800	30uC	220			125J	Si	S435g
46	153PJLA80	800	35uC	220			125J	Si	M1246
47	45MLA100	1.0k	30uC	220			125J	Si	S435g
48	153PJLA100	1.0k	35uC	220			125J	Si	M1246
49	45MLA120	1.2k	30uC	220			125J	Si	S435g
50	153PJLA120	1.2k	35uC	220			125J	Si	M1246
51	DSF402ST01	100	2.7u	250			175J	Si	E200a
52	DSF402ST02	200	2.7u	250			175J	Si	E200a
53	DSF402ST03	300	2.7u	250			175J	Si	E200a
54	DSF402ST04	400	2.7u	250			175J	Si	E200a
55	DSF402ST05	500	2.7u	250			175J	Si	E200a
56	DSF402ST06	600	2.7u	250			175J	Si	E200a
57	DSF402ST07	700	2.7u	250			175J	Si	E200a
58	DSF402ST08	800	2.7u	250			175J	Si	E200a
59	DSF402ST09	900	2.7u	250			175J	Si	E200a
60	DSF402ST10	1.0k	2.7u	250			175J	Si	E200a
61	DSD304-11A	1.1k	1.0u	250			150A	Si	C240e
62	DSF402ST11	1.1k	2.7u	250			175J	Si	E200a
63	DSF402ST12	1.2k	2.7u	250			175J	Si	E200a
64	DSD304-14A	1.4k	1.0u	250			150A	Si	C240e
65	DSD304-16A	1.6k	1.0u	250			150A	Si	C240e
66▼	DSF502ST10	1.0	800n	300			125J	Si	DO200AA
67▼	DSF502ST11	1.1	800n	300			125J	Si	DO200AA
68▼	DSF502ST12	1.2	800n	300			125J	Si	DO200AA
69	S30SC3	30	150n	300	30	20m	125		
70	S30SC4	40	150n	300	40	20m	125		
71▼	DSF502ST06	600	800n	300			125J	Si	DO200AA
72▼	DSF502ST07	700	800n	300			125J	Si	DO200AA
73	SSiK44-40	700	2.8u	300		65		SiΔ	M851
74	SSiK4440	700	2.8u	300		65		SiΔ	M851
75▼	DSF502ST08	800	800n	300			125J	Si	DO200AA
76▼	DSF502ST09	900	800n	300			125J	Si	DO200AA
77	SSiN6665	1.0k	3.0u	300		200		SiΔ	C246j
78	300QH21	1.2k	2.0u	300			125J	Si	C242d
79	SSiK44-65	1.2k	2.8u	300		65		SiΔ	M851
80	SSiK4465	1.2k	2.8u	300		65		SiΔ	M851
81	SSiK44-83	1.5k	2.8u	300		65		SiΔ	M851
82	SSiK4483	1.5k	2.8u	300		65		SiΔ	M851
83	SSiN6683	1.5k	3.0u	300		200		SiΔ	C246j
84	70MLAB160	1.6k	4.0u	300			125J	Si	S435e
85	100MLAB160	1.6k	4.0u	300			125J	Si	S435e
86	103PJLA160	1.6k	4.0u	300			125J	Si	M1246
87	70MLAB180	1.8k	4.0u	300			125J	Si	S435e
88	100MLAB180	1.8k	4.0u	300			125J	Si	S435e
89	103PJLA180	1.8k	4.0u	300			125J	Si	M1246
90	SSiN6610	2.0k		300			140J	Si	C246j
91	SSiN66110	2.0k	3.0u	300		200		SiΔ	C246j
92	70MLAB200	2.0k	4.0u	300			125J	Si	S435e
93	100MLAB200	2.0k	4.0u	300			125J	Si	S435e
94	103PJLA200	2.0k	4.0u	300			125J	Si	M1246
95	300EXH21	2.5k	5.0n	300			125J	Si	C242g
96	500EXH21	2.5k	5.0n	300			125J	Si	M994
97	800EXH21	2.5k	5.0n	300			125J	Si	M995
98	70MLAB250	2.5k	4.0u	300			125J	Si	S435e
99	103PJLA250	2.5k	4.0u	300			125J	Si	M1246
100	R5020113LSWA	100	.70u	314			125A		DO8Ø
101	R5020108FJWA	100	1.5u	314			175J	Si	DO8Ø
102	R5020110FJWA	100	1.5u	314			175J	Si	DO8Ø
103	R5020118FSWA	100	1.5u	314			175A		DO8Ø
104	R5020108EJWA	100	2.0u	314			175J	Si	DO8Ø
105	R5020110EJWA	100	2.0u	314			175J	Si	DO8Ø
106	R5020108CJWA	100	3.0u	314			175J	Si	DO8Ø
107	R5020110CJWA	100	3.0u	314			175J	Si	DO8Ø
108	R5020213LSWA	200	.70u	314			125A		DO8Ø
109	R5020208FJWA	200	1.5u	314		30	175J	Si	DO8Ø
110	R5020210FJWA	200	1.5u	314		30	175J	Si	DO8Ø
111	R5020208EJWA	200	2.0u	314		30	175J	Si	DO8Ø
112	R5020210EJWA	200	2.0u	314		30	175J	Si	DO8Ø
113	R5020208CJWA	200	3.0u	314		30	175J	Si	DO8Ø
114	R5020210CJWA	200	3.0u	314		30	175J	Si	DO8Ø
115	R5020313LSWA	300	.70u	314			125A		DO8Ø
116	R5020308FJWA	300	1.5u	314		30	175J	Si	DO8Ø
117	R5020310FJWA	300	1.5u	314			175J	Si	DO8Ø
118	R5020308EJWA	300	2.0u	314		30	175J	Si	DO8Ø
119	R5020310EJWA	300	2.0u	314			175J	Si	DO8Ø
120	R5020308CJWA	300	3.0u	314		30	175J	Si	DO8Ø
121	R5020310CJWA	300	3.0u	314			175J	Si	DO8Ø
122	R5020413LSWA	400	.70u	314			125A		DO8Ø
123	R5020408FJWA	400	1.5u	314		30	175J	Si	DO8Ø
124	R5020410FJWA	400	1.5u	314		30	175J	Si	DO8Ø
125	R5020418FSWA	400	1.5u	314			175A		DO8Ø
126	R5020408EJWA	400	2.0u	314		30	175J	Si	DO8Ø
127	R5020410EJWA	400	2.0u	314		30	175J	Si	DO8Ø
128	R5020408CJWA	400	3.0u	314		30	175J	Si	DO8Ø
129	R5020410CJWA	400	3.0u	314		30	175J	Si	DO8Ø
130	R5020513LSWA	500	.70u	314			125A		DO8Ø
131	R5020508FJWA	500	1.5u	314		30	175J	Si	DO8Ø
132	R5020510FJWA	500	1.5u	314			175J	Si	DO8Ø
133	R5020518FSWA	500	1.5u	314			175A		DO8Ø
134	R5020508EJWA	500	2.0u	314		30	175J	Si	DO8Ø
135	R5020510EJWA	500	2.0u	314			175J	Si	DO8Ø
136	R5020508CJWA	500	3.0u	314		30	175J	Si	DO8Ø
137	R5020510CJWA	500	3.0u	314			175J	Si	DO8Ø
138	R5020613LSWA	600	.70u	314			125A		DO8Ø
139	R5020608FJWA	600	1.5u	314		30	175J	Si	DO8Ø
140	R5020610FJWA	600	1.5u	314		30	175J	Si	DO8Ø
141	R5020618FSWA	600	1.5u	314			175A		DO8Ø
142	R5020608EJWA	600	2.0u	314		30	175J	Si	DO8Ø
143	R5020610EJWA	600	2.0u	314		30	175J	Si	DO8Ø
144	R5020608CJWA	600	3.0u	314		30	175J	Si	DO8Ø
145	R5020610CJWA	600	3.0u	314		30	175J	Si	DO8Ø
146	R5020713LSWA	700	.70u	314			125A		DO8Ø
147	R5020708FJWA	700	1.5u	314		30	175J	Si	DO8Ø
148	R5020710FJWA	700	1.5u	314			175J	Si	DO8Ø
149	R5020718FSWA	700	1.5u	314			175A		DO8Ø
150	R5020708EJWA	700	2.0u	314		30	175J	Si	DO8Ø
151	R5020710EJWA	700	2.0u	314			175J	Si	DO8Ø
152	R5020708CJWA	700	3.0u	314		30	175J	Si	DO8Ø
153	R5020710CJWA	700	3.0u	314			175J	Si	DO8Ø
154	R5020813LSWA	800	.70u	314			125A		DO8Ø
155	R5020808FJWA	800	1.5u	314		30	175J	Si	DO8Ø
156	R5020810FJWA	800	1.5u	314		30	175J	Si	DO8Ø
157	R5020818FSWA	800	1.5u	314			175A		DO8Ø
158	R5020808EJWA	800	2.0u	314		30	175J	Si	DO8Ø
159	R5020810EJWA	800	2.0u	314		30	175J	Si	DO8Ø

SYMBOLS AND CODES EXPLAINED IN INTERPRETER

4. HIGH-SPEED DIODES - Fast Recovery/Switching (Cont'd)

IN ORDER OF: (1) IF TEST (2) PIV
(3) trr & (4) & VF & (5) TYPE NUMBER

LINE No.	5 TYPE NO.	2 PIV (V)	RECOVERY TIME 3 trr (s)	TEST CONDITIONS 1 IF (A)	4 VR (V)	IR (A)	MAX. TEMP (°C)	MAT.	DRAWING NO.
1	R5020808CJWA								
		800	3.0u	314		30	175J	Si	DO8Ø
2	R5020810CJWA								
		800	3.0u	314		30	175J	Si	DO8Ø
3	R5020913LSWA								
		900	.70u	314			125A		DO8Ø
4	R5020908FJWA								
		900	1.5u	314		30	175J	Si	DO8Ø
5	R5020910FJWA								
		900	1.5u	314			175J	Si	DO8Ø
6	R5020918FSWA								
		900	1.5u	314			175A		DO8Ø
7	R5020908EJWA								
		900	2.0u	314		30	175J	Si	DO8Ø
8	R5020910EJWA								
		900	2.0u	314			175J	Si	DO8Ø
9	R5020908CJWA								
		900	3.0u	314		30	175J	Si	DO8Ø
10	R5020910CJWA								
		900	3.0u	314			175J	Si	DO8Ø
11	R5021013LSWA								
		1.0k	.70u	314			125A		DO8Ø
12	R5021008FJWA								
		1.0k	1.5u	314		30	175J	Si	DO8Ø
13	R5021010FJWA								
		1.0k	1.5u	314		30	175J	Si	DO8Ø
14	R5021018FSWA								
		1.0k	1.5u	314			150J		DO8
15	R5021008EJWA								
		1.0k	2.0u	314		30	175J	Si	DO8Ø
16	R5021010EJWA								
		1.0k	2.0u	314		30	175J	Si	DO8Ø
17	R5021008CJWA								
		1.0k	3.0u	314		30	175J	Si	DO8Ø
18	R5021010CJWA								
		1.0k	3.0u	314		30	175J	Si	DO8Ø
19	R5021108FJWA								
		1.1k	1.5u	314		30	175J	Si	DO8Ø
20	R5021110FJWA								
		1.1k	1.5u	314			175J	Si	DO8Ø
21	R5021118FSWA								
		1.1k	1.5u	314			175A		DO8Ø
22	R5021108EJWA								
		1.1k	2.0u	314		30	175J	Si	DO8Ø
23	R5021110EJWA								
		1.1k	2.0u	314			175J	Si	DO8Ø
24	R5021108CJWA								
		1.1k	3.0u	314		30	175J	Si	DO8Ø
25	R5021110CJWA								
		1.1k	3.0u	314			175J	Si	DO8Ø
26	R5021213LSWA								
		1.2k	.70u	314			125A		DO8Ø
27	R5021208FJWA								
		1.2k	1.5u	314		30	175J	Si	DO8Ø
28	R5021210FJWA								
		1.2k	1.5u	314		30	175J	Si	DO8Ø
29	R5021218FSWA								
		1.2k	1.5u	314			175A		DO8Ø
30	R5021208EJWA								
		1.2k	2.0u	314		30	175J	Si	DO8Ø
31	R5021210EJWA								
		1.2k	2.0u	314		30	175J	Si	DO8Ø
32	R5021208CJWA								
		1.2k	3.0u	314		30	175J	Si	DO8Ø
33	R5021210CJWA								
		1.2k	3.0u	314		30	175J	Si	DO8Ø
34	R5021313LSWA								
		1.3k	.70u	314			125A		DO8Ø
35	R5021318FSWA								
		1.3k	1.5u	314			175A		DO8Ø
36	R5021413LSWA								
		1.4k	.70u	314			125A		DO8Ø
37	R5021418FSWA								
		1.4k	1.5u	314			175A		DO8Ø
38	101KL40S15	400	1.5u	315		30	175J	Si	DO8Ø
39	101KL40S20	400	2.0u	315		35	175J	Si	DO8Ø
40	101KL60S15	600	1.5u	315		30	175J	Si	DO8Ø
41	101KL60S20	600	2.0u	315		35	175J	Si	DO8Ø
42	101KL80S15	800	1.5u	315		30	175J	Si	DO8Ø
43	101KL80S20	800	2.0u	315		35	175J	Si	DO8Ø
44	101KL100S15	1.0k	1.5u	315		30	175J	Si	DO8Ø
45	101KL100S20	1.0k	2.0u	315		35	175J	Si	DO8Ø
46	101KL100S30	1.0k	3.0u	315		45	175J	SiΔ	DO8Ø
47	101KL120S20	1.2k	2.0u	315		35	175J	Si	DO8Ø
48	101KL120S30	1.2k	3.0u	315		45	175J	SiΔ	DO8Ø
49	101KL130S30	1.3k	3.0u	315		45	175J	SiΔ	DO8Ø
50	101KL140S30	1.4k	3.0u	315		45	175J	SiΔ	DO8Ø
51	101KL150S30	1.5k	3.0u	315		45	175J	SiΔ	DO8Ø
52	101KL160S30	1.6k	3.0u	315		45	175J	SiΔ	DO8Ø
53♦	MA152WA	80	40n	350	1.0	1.0	125S	Si	M988
54	ARF912P01	100	4.0u	350			150J	SiΔ	M1005§
55	ARF912S01	100	4.0u	350			150J	SiΔ	M1005♦
56	ARF912P02	200	4.0u	350			150J	SiΔ	M1005§
57	ARF912S02	200	4.0u	350			150J	SiΔ	M1005♦
58	ARF912P03	300	4.0u	350			150J	SiΔ	M1005§
59	ARF912S03	300	4.0u	350			150J	SiΔ	M1005♦
60	ARF912P04	400	4.0u	350			150J	SiΔ	M1005§
61	ARF912S04	400	4.0u	350			150J	SiΔ	M1005♦
62	ARF912P05	500	4.0u	350			150J	SiΔ	M1005§
63	ARF912S05	500	4.0u	350			150J	SiΔ	M1005♦
64	ARF912P06	600	4.0u	350			150J	SiΔ	M1005§
65	ARF912S06	600	4.0u	350			150J	SiΔ	M1005♦
66	ARF912P07	700	4.0u	350			150J	SiΔ	M1005§
67	ARF912S07	700	4.0u	350			150J	SiΔ	M1005♦
68	ARF912P08	800	4.0u	350			150J	SiΔ	M1005§
69	ARF912S08	800	4.0u	350			150J	SiΔ	M1005♦
70	ARF912P09	900	4.0u	350			150J	SiΔ	M1005§
71	ARF912S09	900	4.0u	350			150J	SiΔ	M1005♦
72	ARF912P10	1.0k	4.0u	350			150J	SiΔ	M1005§
73	ARF912S10	1.0k	4.0u	350			150J	SiΔ	M1005♦

LINE No.	5 TYPE NO.	2 PIV (V)	RECOVERY TIME 3 trr (s)	TEST CONDITIONS 1 IF (A)	4 VR (V)	IR (A)	MAX. TEMP (°C)	MAT.	DRAWING NO.
74	ARF912P11	1.1k	4.0u	350			150J	SiΔ	M1005§
75	ARF912S11	1.1k	4.0u	350			150J	SiΔ	M1005♦
76	ARF912P12	1.2k	4.0u	350			150J	SiΔ	M1005§
77	ARF912S12	1.2k	4.0u	350			150J	SiΔ	M1005♦
78	ARF912P13	1.3k	4.0u	350			150J	SiΔ	M1005§
79	ARF912S13	1.3k	4.0u	350			150J	SiΔ	M1005♦
80	ARF912P14	1.4k	4.0u	350			150J	SiΔ	M1005§
81	ARF912S14	1.4k	4.0u	350			150J	SiΔ	M1005♦
82	ARF912P15	1.5k	4.0u	350			150J	SiΔ	M1005§
83	ARF912S15	1.5k	4.0u	350			150J	SiΔ	M1005♦
84♦	ARF912S16	1.6k	4.0u	350			15	SiΔ	M1005♦
85♦	ARF912P17	1.7k	4.0u	350			150J	SiΔ	M1005§
86♦	ARF912S17	1.7k	4.0u	350			15	SiΔ	M1005♦
87♦	ARF912P18	1.8k	4.0u	350			150J	SiΔ	M1005§
88♦	ARF912S18	1.8k	4.0u	350			15	SiΔ	M1005♦
89♦	ARF912P19	1.9k	4.0u	350			150J	SiΔ	M1005§
90♦	ARF912S19	1.9k	4.0u	350			15	SiΔ	M1005♦
91♦	ARF912P20	2.0k	4.0u	350			150J	SiΔ	M1005§
92♦	ARF912S20	2.0k	4.0u	350			15	SiΔ	M1005♦
93♦	ARF912P21	2.1k	4.0u	350			150J	SiΔ	M1005§
94♦	ARF912S21	2.1k	4.0u	350			15	SiΔ	M1005♦
95♦	ARF912P22	2.2k	4.0u	350			150J	SiΔ	M1005§
96♦	ARF912S22	2.2k	4.0u	350			15	SiΔ	M1005♦
97♦	ARF912P23	2.3k	4.0u	350			150J	SiΔ	M1005§
98♦	ARF912S23	2.3k	4.0u	350			15	SiΔ	M1005♦
99♦	ARF912P24	2.4k	4.0u	350			150J	SiΔ	M1005§
100♦	ARF912S24	2.4k	4.0u	350			15	SiΔ	M1005♦
101♦	ARF912P25	2.5k	4.0u	350			150J	SiΔ	M1005§
102♦	ARF912S25	2.5k	4.0u	350			15	SiΔ	M1005♦
103♦	ARF912P26	2.6k	4.0u	350			150J	SiΔ	M1005§
104♦	ARF912S26	2.6k	4.0u	350			15	SiΔ	M1005♦
105	SKN2M400/08	800	2.0u	400		400	140J		C242b
106	SKN2M400/10	1.0k	2.0u	400		400	140J		C242b
107	SKN2M400/12	1.2k	2.0u	400		400	140J		C242b
108	SKN2M400/14	1.4k	2.0u	400		400	140J		C242b
109	SKN2M400/15	1.4k	2.0u	400		400	140J		C242b
110	D431S2400T	2.4k	400uC	400			150J	Si	C244b
111	D431S2800T	2.8k	400uC	400			150J	Si	C244b
112	D431S3200T	3.2k	400uC	400			150J	Si	C244b
113	D431S3600T	3.6k	400uC	400			150J	Si	C244b
114	70MLA60	600	30uC	470			125J	Si	S12r
115	253PJLA60	600	35uC	470			125J	Si	M1246
116	70MLA80	800	30uC	470			125J	Si	S12r
117	253PJLA80	800	35uC	470			125J	Si	M1246
118	70MLA100	1.0k	30uC	470			125J	Si	S12r
119	253PJLA100	1.0k	35uC	470			125J	Si	M1246
120	70MLA120	1.2k	30uC	470			125J	Si	S12r
121	253PJLA120	1.2k	35uC	470			125J	Si	M1246
122	RGP10A	50	150n	500		1.0	175A	Si	DO41
123	DSF912SM01	100	3.8u	500			175S	SiΔ	M757
124	DSF912SM02	200	3.8u	500			175S	SiΔ	M757
125	R7220305EJ	300	2.0u	500			175J	Si	C246
126	R7220305CJ	300	3.0u	500			175J	Si	C246
127	DSF912SM03	300	3.8u	500			175S	SiΔ	M757
128	R7220305AJ	300	5.0u	500			175J	Si	C246
129	DSF912SM04	400	3.8u	500			175S	SiΔ	M757
130	R7220505EJ	500	2.0u	500			175J	Si	C246
131	R7220505CJ	500	3.0u	500			175J	Si	C246
132	DSF912SM05	500	3.8u	500			175S	SiΔ	M757
133	R7220505AJ	500	5.0u	500			175J	Si	C246
134	DSF912SM06	600	3.8u	500			175S	SiΔ	M757
135	R7220705EJ	700	2.0u	500			175J	Si	C246
136	R7220705CJ	700	3.0u	500			175J	Si	C246
137	SSiL44-40	700	3.0u	500		75		SiΔ	M851
138	SSiL4440	700	3.0u	500		75		SiΔ	M851
139	DSF912SM07	700	3.8u	500			175S	SiΔ	M757
140	R7220705AJ	700	5.0u	500			175J	Si	C246
141	DSF912SM08	800	3.8u	500			175S	SiΔ	M757
142	R7220905EJ	900	2.0u	500			175J	Si	C246
143	R7220905CJ	900	3.0u	500			175J	Si	C246
144	DSF912SM09	900	3.8u	500			175S	SiΔ	M757
145	R7220905AJ	900	5.0u	500			175J	Si	C246
146	R7221005EJ	1.0k	2.0u	500			175J	Si	C246
147	R7221005CJ	1.0k	3.0u	500			175J	Si	C246
148	DSF912SM10	1.0k	3.8u	500			175S	SiΔ	M757
149	R7221005AJ	1.0k	5.0u	500			175J	Si	C246
150	R7221105EJ	1.1k	2.0u	500			175J	Si	C246
151	R7221105CJ	1.1k	3.0u	500			175J	Si	C246
152	DSF912SM11	1.1k	3.8u	500			175S	SiΔ	M757
153	R7221105AJ	1.1k	5.0u	500			175J	Si	C246
154	SSiL44-65	1.2k	3.0u	500		75		SiΔ	M851
155	SSiL4465	1.2k	3.0u	500		75		SiΔ	M851
156	DSF912SM12	1.2k	3.8u	500			175S	SiΔ	M757
157	R7221305CJ	1.3k	3.0u	500			175J	Si	C246
158	DSF912SM13	1.3k	3.8u	500			175S	SiΔ	M757
159	R7221305AJ	1.3k	5.0u	500			175J	Si	C246
160	DSF912SM14	1.4k	3.8u	500			175S	SiΔ	M757
161	R7221505CJ	1.5k	3.0u	500			175J	Si	C246
162	SSiL44-83	1.5k	3.0u	500		75		SiΔ	M851
163	SSiL4483	1.5k	3.0u	500		75		SiΔ	M851
164	DSF912SM15	1.5k	3.8u	500			175S	SiΔ	M757
165	R7221505AJ	1.5k	5.0u	500			175J	Si	C246
166	DSF912SM16	1.6k	3.8u	500			175S	SiΔ	M757
167	DSF912SM17	1.7k	3.8u	500			175S	SiΔ	M757
168	R7221705AJ	1.7k	5.0u	500			175J	Si	C246
169	DSF912SM18	1.8k	3.8u	500			175S	SiΔ	M757
170	DSF912SM19	1.9k	3.8u	500			175S	SiΔ	M757
171	R7221905AJ	1.9k	5.0u	500			175J	Si	C246
172	DSF912SM20	2.0k	3.8u	500			175S	SiΔ	M757
173	DSF912SM21	2.1k	3.8u	500			175S	SiΔ	M757
174	DSF912SM22	2.2k	3.8u	500			175S	SiΔ	M757
175	DSF912SM23	2.3k	3.8u	500			175S	SiΔ	M757
176	R7222305AJ	2.3k	5.0u	500			175J	Si	C246
177	DSF912SM24	2.4k	3.8u	500			175S	SiΔ	M757
178	DSF912SM25	2.5k	3.8u	500			175S	SiΔ	M757
179	FD500GH50	2.5k	300uC	500	150		125B	SiΔ	M1345
180	DSF912SM26	2.6k	3.8u	500			175S	SiΔ	M757
181	FD500GH56	2.8k	300uC	500	150		125B	SiΔ	M1345
182	SM02CXC170	200	3u	550	50		125	SiΔ	DO200AA
183	SM02PHN170	200	3u	550	50		125J	SiΔ	S540

SYMBOLS AND CODES
EXPLAINED IN INTERPRETER

4. HIGH-SPEED DIODES - Fast Recovery/Switching (Cont'd)

IN ORDER OF: (1) IF TEST (2) PIV (3) trr & (4) & VF & (5) TYPE NUMBER

LINE No.	5 TYPE NO.	2 PIV (V)	RECOVERY TIME 3 trr (s)	TEST CONDITIONS 1 IF (A)	4 VR (V)	IR (A)	MAX. TEMP (°C)	MAT.	DRAWING NO.
1	SM04CXC170	400	3u	550	50		125	SiΔ	DO200AA
2	SM04PHN170	400	3u	550	50		125J	SiΔ	S540
3	SM06CXC170	600	3u	550	50		125	SiΔ	E200a
4	SM06PHN170	600	3u	550	50		125J	SiΔ	S540
5	SM08PHN170	800	3u	550	50		125J	SiΔ	S540
6♦	SM08CXC170	800	34	550	50		125	SiΔ	E200a
7	SM10PHN170	1.0k	3u	550	50		125J	SiΔ	S540
8♦	SM10CXC170	1.0k	34	550	50		125	SiΔ	E200a
9	SM12CXC170	1.2k	3u	550	50		125	SiΔ	DO200AA
10	SM12CXC174	1.2k	4u	550	50		125	SiΔ	DO200AA
11	SM12PHN174	1.2k	4.0u	550	50		125J	SiΔ	S541
12	SM14CXC174	1.4k	4u	550	50		125	SiΔ	DO200AA
13	SM14PHN174	1.4k	4u	550	50		125	SiΔ	S541
14	SM16CXC174	1.6k	4u	550	50		125	SiΔ	DO200AA
15	SM16PHN174	1.6k	4u	550	50		125	SiΔ	S541
16	SM18CXC174	1.8k	4u	550	50		125	SiΔ	DO200AA
17	SM18PHN174	1.8k	4u	550	50		125	SiΔ	S541
18	SM20CXC174	2.0k	4u	550	50		125	SiΔ	DO200AA
19	SM20PHN174	2.0k	4u	550	50		125	SiΔ	S541
20	R7220306EJ	300	2.0u	600			175J	Si	C246
21	R7220306CJ	300	3.0u	600			175J	Si	C246
22	R7220306AJ	300	5.0u	600			175J	Si	C246
23	R7220506EJ	500	2.0u	600			175J	Si	C246
24	R7220506CJ	500	3.0u	600			175J	Si	C246
25	R7220506AJ	500	5.0u	600			175J	Si	C246
26	R7220706EJ	700	2.0u	600			175J	Si	C246
27	R7220706CJ	700	3.0u	600			175J	Si	C246
28	R7220706AJ	700	5.0u	600			175J	Si	C246
29	R7220906EJ	900	2.0u	600			175J	Si	C246
30	R7220906CJ	900	3.0u	600			175J	Si	C246
31	R7220906AJ	900	5.0u	600			175J	Si	C246
32	R7221106EJ	1.1k	2.0u	600			175J	Si	C246
33	R7221106CJ	1.1k	3.0u	600			175J	Si	C246
34	R7221106AJ	1.1k	5.0u	600			175J	Si	C246
35	R7221306CJ	1.3k	3.0u	600			175J	Si	C246
36	R7221306AJ	1.3k	5.0u	600			175J	Si	C246
37	R7221506CJ	1.5k	3.0u	600			175J	Si	C246
38	R7221506AJ	1.5k	5.0u	600			175J	Si	C246
39	150MLAB160	1.6k	4.0u	600			125J	Si	S435f
40	203PJLA160	1.6k	4.0u	600			125J	Si	M1246
41	150MLAB180	1.8k	4.0u	600			125J	Si	S435f
42	203PJLA180	1.8k	4.0u	600			125J	Si	M1246
43	150MLAB200	2.0k	4.0u	600			125J	Si	S435f
44	203PJLA200	2.0k	4.0u	600			125J	Si	M1246
45	150MLAB250	2.5k	4.0u	600			125J	Si	S435f
46	203PJLA250	2.5k	4.0u	600			125J	Si	M1246
47	R6020120FJYA	100	1.5u	785		36	175J	Si	DO9Ø
48	R6020125FJYA	100	1.5u	785		36	175J	Si	DO9Ø
49	R6220135FJ	100	1.5u	785		36	175J	Si	C242
50	R6220140FJ	100	1.5u	785		36	175J	Si	C242
51	R6020120EJYA	100	2.0u	785		36	175J	Si	DO9Ø
52	R6020125EJYA	100	2.0u	785		36	175J	Si	DO9Ø
53	R6220135EJ	100	2.0u	785		36	175J	Si	C242
54	R6220140EJ	100	2.0u	785		36	175J	Si	C242
55	R6020120CJYA	100	3.0u	785		36	175J	Si	DO9Ø
56	R6020125CJYA	100	3.0u	785		36	175J	Si	DO9Ø
57	R6220135CJ	100	3.0u	785		36	175J	Si	C242
58	R6220140CJ	100	3.0u	785		36	175J	Si	C242
59	R6000120YA	100	9.0u	785			190J	Si	DO9Ø
60	R6100120YA	100	9.0u	785			190J	Si	DO9Ø
61	R6100125YA	100	9.0u	785			190J	Si	DO9Ø
62	R6100130YA	100	9.0u	785			190J	Si	DO9Ø
63	R6000125YA	100	11u	785			175J	Si	DO9Ø
64	R6000130YA	100	13u	785			150J	Si	DO9Ø
65	251UL20S10	200	1.0u	785			150J	Si	DO9
66	251UL20S15	200	1.5u	785			175J	Si	DO9
67	R6020220FJYA	200	1.5u	785		36	175J	Si	DO9Ø
68	R6020225FJYA	200	1.5u	785		36	175J	Si	DO9Ø
69	R6220235FJ	200	1.5u	785		36	175J	Si	DO9Ø
70	R6220240FJ	200	1.5u	785		36	175J	Si	C242
71	R6020220EJYA	200	2.0u	785		36	175J	Si	DO9Ø
72	R6020225EJYA	200	2.0u	785		36	175J	Si	DO9Ø
73	R6220235EJ	200	2.0u	785		36	175J	Si	C242
74	R6220240EJ	200	2.0u	785		36	175J	Si	C242
75	R6020220CJYA	200	3.0u	785		36	175J	Si	DO9Ø
76	R6020225CJYA	200	3.0u	785		36	175J	Si	DO9Ø
77	R6220235CJ	200	3.0u	785		36	175J	Si	C242
78	R6220240CJ	200	3.0u	785		36	175J	Si	C242
79	R6000220YA	200	9.0u	785			190J	Si	DO9Ø
80	R6100220YA	200	9.0u	785			190J	Si	DO9Ø
81	R6100225YA	200	9.0u	785			190J	Si	DO9Ø
82	R6100230YA	200	9.0u	785			190J	Si	DO9Ø
83	R6000225YA	200	11u	785			175J	Si	DO9Ø
84	R6000230YA	200	13u	785			150J	Si	DO9Ø
85	R6020325FJYA	300	1.5u	785		29	175J	Si	DO9Ø
86	R6220340FJ	300	1.5u	785		29	175J	Si	
87	R6020325EJYA	300	2.0u	785		29	175J	Si	DO9Ø
88	R6220340EJ	300	2.0u	785		29	175J	Si	
89	R6020325CJYA	300	3.0u	785		29	175J	Si	DO9Ø
90	R6220340CJ	300	3.0u	785		29	175J	Si	
91	R6100320YA	300	9.0u	785			190J	Si	DO9Ø
92	R6100325YA	300	9.0u	785			190J	Si	DO9Ø
93	R6100330YA	300	9.0u	785			190J	Si	DO9Ø
94	251UL40S10	400	1.0u	785			150J	Si	DO9
95	R6020425HSYA	400	1.0u	785			150J		DO9Ø
96	R6220440HS00	400	1.0u	785			150J		C242a
97	251UL40S15	400	1.5u	785		30	175J	SiΔ	DO9Ø
98	R6020420FJYA	400	1.5u	785		36	175J	Si	DO9Ø
99	R6220435FJ	400	1.5u	785		36	175J	Si	C242
100	R6220440FJ	400	1.5u	785		30	175J	Si	C242
101	251UL40S20	400	2.0u	785		35	175J	SiΔ	DO9Ø
102	R6020420EJYA	400	2.0u	785		36	175J	Si	DO9Ø
103	R6020425EJYA	400	2.0u	785		36	175J	Si	DO9Ø
104	R6020435ESYA	400	2.0u	785			150J		DO9Ø
105	R6220435EJ	400	2.0u	785		36	175J	Si	C242
106	R6220440EJ	400	2.0u	785		36	175J	Si	C242
107	R6020420CJYA	400	3.0u	785		36	175J	Si	DO9Ø
108	R6020425CJYA	400	3.0u	785		36	175J	Si	DO9Ø
109	R6020425FJYA	400	3.0u	785		36	175J	Si	DO9Ø
110	R6220435CJ	400	3.0u	785		36	175J	Si	C242
111	R6220440CJ	400	3.0u	785		36	175J	Si	C242
112	R6000420YA	400	9.0u	785			190J	Si	DO9Ø
113	R6100420YA	400	9.0u	785			190J	Si	DO9Ø
114	R6100425YA	400	9.0u	785			190J	Si	DO9Ø
115	R6100430YA	400	9.0u	785			190J	Si	DO9Ø
116	R6000425YA	400	11u	785			175J	Si	DO9Ø
117	R6000430YA	400	13u	785			150J	Si	DO9Ø
118	R6020525FJYA	500	1.5u	785		29	175J	Si	DO9Ø
119	R6220540FJ	500	1.5u	785		29	175J	Si	
120	R6020525EJYA	500	2.0u	785		29	175J	Si	DO9Ø
121	R6220540EJ	500	2.0u	785		29	175J	Si	
122	R6020525CJYA	500	3.0u	785		29	175J	Si	DO9Ø
123	R6220540CJ	500	3.0u	785		29	175J	Si	
124	R6100520YA	500	9.0u	785			190J	Si	DO9Ø
125	R6100525YA	500	9.0u	785			190J	Si	DO9Ø
126	R6100530YA	500	9.0u	785			190J	Si	DO9Ø
127	251UL60S10	600	1.0u	785			150J	Si	DO9
128	R6020625HSYA	600	1.0u	785			150J		DO9Ø
129	R6220640HS00	600	1.0u	785			150J		C242a
130	251UL60S15	600	1.5u	785		30	175J	Si	DO9Ø
131	R6020620FJYA	600	1.5u	785		36	175J	Si	DO9Ø
132	R6020625FJYA	600	1.5u	785		36	175J	Si	DO9Ø
133	R6220635FJ	600	1.5u	785		36	175J	Si	C242
134	R6220640FJ	600	1.5u	785		36	175J	Si	C242
135	251UL60S20	600	2.0u	785		35	175J	Si	DO9Ø
136	R6020620EJYA	600	2.0u	785		36	175J	Si	DO9Ø
137	R6020625EJYA	600	2.0u	785		36	175J	Si	DO9Ø
138	R6020635ESYA	600	2.0u	785			150J		DO9Ø
139	R6220635EJ	600	2.0u	785		36	175J	Si	C242
140	R6220640EJ	600	2.0u	785		36	175J	Si	C242
141	R6220655ES00	600	2.0u	785			150J		C242a
142	R6020620CJYA	600	3.0u	785		36	175J	Si	DO9Ø
143	R6020625CJYA	600	3.0u	785		36	175J	Si	DO9Ø
144	R6220635CJ	600	3.0u	785		36	175J	Si	C242
145	R6220640CJ	600	3.0u	785		36	175J	Si	C242
146	R6000620YA	600	9.0u	785			190J	Si	DO9Ø
147	R6100620YA	600	9.0u	785			190J	Si	DO9Ø
148	R6100625YA	600	9.0u	785			190J	Si	DO9Ø
149	R6100630YA	600	9.0u	785			190J	Si	DO9Ø
150	R6000625YA	600	11u	785			175J	Si	DO9Ø
151	R6000630YA	600	13u	785			150J	Si	DO9Ø
152	R6020725HSYA	700	1.0u	785			150J		DO9Ø
153	R6220740HS00	700	1.0u	785			150J		C242a
154	R6020725FJYA	700	1.5u	785		29	175J	Si	DO9Ø
155	R6220740FJ	700	1.5u	785		29	175J	Si	
156	R6020725EJYA	700	2.0u	785		29	175J	Si	DO9Ø
157	R6020735ESYA	700	2.0u	785			150J		DO9Ø
158	R6220455ES00	700	2.0u	785			150J		C242a
159	R6220740EJ	700	2.0u	785		29	175J	Si	
160	R6220755ES00	700	2.0u	785			150J		C242a
161	R6020725CJYA	700	3.0u	785		29	175J	Si	DO9Ø
162	R6220740CJ	700	3.0u	785		29	175J	Si	
163	R6100720YA	700	9.0u	785			190J	Si	DO9Ø
164	R6100725YA	700	9.0u	785			190J	Si	DO9Ø
165	R6100730YA	700	9.0u	785			190J	Si	DO9Ø
166	251UL80S10	800	1.0u	785			150J	Si	DO9
167	R6020825HSYA	800	1.0u	785			150J		DO8Ø
168	R6220840HS00	800	1.0u	785					
169	251UL80S15	800	1.5u	785		30	175J	Si	DO9Ø
170	R6020820FJYA	800	1.5u	785		36	175J	Si	DO9Ø

SYMBOLS AND CODES EXPLAINED IN INTERPRETER

4. HIGH-SPEED DIODES - Fast Recovery/Switching (Cont'd)

IN ORDER OF: (1) IF TEST (2) PIV (3) trr & (4) & VF & (5) TYPE NUMBER

LINE No.	5 TYPE NO.	2 PIV (V)	RECOVERY TIME 3 trr (s)	TEST CONDITIONS 1 IF (A)	4 VR (V)	IR (A)	MAX. TEMP (°C)	MAT.	DRAWING NO.
1	R6020825FJYA								
		800	1.5u	785		36	175J	Si	DO9Ø
2	R6220835FJ	800	1.5u	785		36	175J	Si	C242
3	R6220840FJ	800	1.5u	785		36	175J	Si	C242
4	251UL80S20	800	2.0u	785		35	175J	Si	DO9Ø
5	R6020820EJYA								
		800	2.0u	785		36	175J	Si	DO9Ø
6	R6020825EJYA								
		800	2.0u	785		36	175J	Si	DO9Ø
7	R6020835ESYA								
		800	2.0u	785			150J		DO9Ø
8	R6220835EJ	800	2.0u	785		36	175J	Si	C242
9	R6220840EJ	800	2.0u	785		36	175J	Si	C242
10	R6220855ES00								
		800	2.0u	785			150J		C242a
11	R6020820CJYA								
		800	3.0u	785		36	175J	Si	DO9Ø
12	R6020825CJYA								
		800	3.0u	785		36	175J	Si	DO9Ø
13	R6220835CJ	800	3.0u	785		36	175J	Si	C242
14	R6220840CJ	800	3.0u	785		36	175J	Si	C242
15	R6000820YA	800	9.0u	785			190J	Si	DO9Ø
16	R6100820YA	800	9.0u	785			190J	Si	DO9Ø
17	R6100825YA	800	9.0u	785			190J	Si	DO9Ø
18	R6100830YA	800	9.0u	785			190J	Si	DO9Ø
19	R6000825YA	800	11u	785			175J	Si	DO9Ø
20	R6000830YA	800	13u	785			150J	Si	DO9Ø
21	R6020925HSYA								
		900	1.0u	785			150J		DO9Ø
22	R6220940HS00								
		900	1.0u	785			150J		C242a
23	R6020925FJYA								
		900	1.5u	785		29	175J	Si	DO9Ø
24	R6220940FJ	900	1.5u	785		29	175J	Si	
25	R6020925EJYA								
		900	2.0u	785		29	175J	Si	DO9Ø
26	R6020935ESYA								
		900	2.0u	785			150J		DO9Ø
27	R6220940EJ	900	2.0u	785		29	175J	Si	
28	R6220955ES00								
		900	2.0u	785			150J		C242a
29	R6020925CJYA								
		900	3.0u	785		29	175J	Si	DO9Ø
30	R6220940CJ	900	3.0u	785		29	175J	Si	
31	R6100920YA	900	9.0u	785			190J	Si	DO9Ø
32	R6100925YA	900	9.0u	785			190J	Si	DO9Ø
33	R6100930YA	900	9.0u	785			190J	Si	DO9Ø
34	251UL100S10	1.0k	1.0u	785			150J	Si	DO9
35	R6021025HSYA								
		1.0k	1.0u	785			150J		DO9Ø
36	R6221040HS00								
		1.0k	1.0u	785			150J		C242a
37	251UL100S15	1.0k	1.5u	785		30	175J	Si	DO9Ø
38	R6021020FJYA								
		1.0k	1.5u	785		36	175J	Si	DO9Ø
39	R6021025FJYA								
		1.0k	1.5u	785		36	175J	Si	DO9Ø
40	R6221035FJ	1.0k	1.5u	785		36	175J	Si	C242
41	R6221040FJ	1.0k	1.5u	785		36	175J	Si	C242
42	251UL100S20	1.0k	2.0u	785		35	175J	Si	DO9Ø
43	R6021020EJYA								
		1.0k	2.0u	785		36	175J	Si	DO9Ø
44	R6021025EJYA								
		1.0k	2.0u	785		36	175J	Si	DO9Ø
45	R6021035ESYA								
		1.0k	2.0u	785			150J		DO9Ø
46	R6221035EJ	1.0k	2.0u	785		36	175J	Si	C242
47	R6221040EJ	1.0k	2.0u	785		36	175J	Si	C242
48	251UL100S25	1.0k	2.5u	785			175J	Si	DO9
49	251UL100S30	1.0k	3.0u	785		45	175J	Si△	DO9Ø
50	R6021020CJYA								
		1.0k	3.0u	785		36	175J	Si	DO9Ø
51	R6021025CJYA								
		1.0k	3.0u	785		36	175J	Si	DO9Ø
52	R6221035CJ	1.0k	3.0u	785		36	175J	Si	C242
53	R6221040CJ	1.0k	3.0u	785		36	175J	Si	C242
54	R6001020YA	1.0k	9.0u	785			190J	Si	DO9Ø
55	R6101020YA	1.0k	9.0u	785			190J	Si	DO9Ø
56	R6101025YA	1.0k	9.0u	785			190J	Si	DO9Ø
57	R6101030YA	1.0k	9.0u	785			190J	Si	DO9Ø
58	R6001025YA	1.0k	11u	785			175J	Si	DO9Ø
59	R6001030YA	1.0k	13u	785			150J	Si	DO9Ø
60	R6021125HSYA								
		1.1k	1.0u	785			150J		DO9Ø
61	R6221140HS00								
		1.1k	1.0u	785			150J		C242a
62	R6021125FJYA								
		1.1k	1.5u	785		29	175J	Si	DO9Ø
63	R6221140FJ	1.1k	1.5u	785		29	175J	Si	
64	R6021125EJYA								
		1.1k	2.0u	785		29	175J	Si	DO9Ø
65	R6021135ESYA								
		1.1k	2.0u	785			150J		DO9Ø
66	R6221140EJ	1.1k	2.0u	785		29	175J	Si	
67	R6221155ES00								
		1.1k	2.0u	785			150J		C242a
68	R6021125CJYA								
		1.1k	3.0u	785		29	175J	Si	DO9Ø
69	R6221140CJ	1.1k	3.0u	785		29	175J	Si	
70	R6021225HSYA								
		1.2k	1.0u	785			150J		DO9Ø
71	R6221240HS00								
		1.2k	1.0u	785			150J		C242a
72	R6021220FJYA								
		1.2k	1.5u	785		36	175J	Si	DO9Ø
73	R6021225FJYA								
		1.2k	1.5u	785		36	175J	Si	DO9Ø
74	R6221235FJ	1.2k	1.5u	785		36	175J	Si	C242
75	R6221240FJ	1.2k	1.5u	785		36	175J	Si	C242
76	251UL120S20	1.2k	2.0u	785		35	175J	Si	DO9Ø
77	R6021220EJYA								
		1.2k	2.0u	785		36	175J	Si	DO9Ø
78	R6021225EJYA								
		1.2k	2.0u	785		36	175J	Si	DO9Ø
79	R6021235ESYA								
		1.2k	2.0u	785			150J		DO9Ø
80	R6221235EJ	1.2k	2.0u	785		36	175J	Si	C242
81	R6221240EJ	1.2k	2.0u	785		36	175J	Si	C242
82	R6221255ES00								
		1.2k	2.0u	785			150J		C242a
83	251UL120S25	1.2k	2.5u	785			175J	Si	DO9
84	251UL120S30	1.2k	3.0u	785		45	175J	Si△	DO9Ø
85	R6021220CJYA								
		1.2k	3.0u	785		36	175J	Si	DO9Ø
86	R6021225CJYA								
		1.2k	3.0u	785		36	175J	Si	DO9Ø
87	R6221235CJ	1.2k	3.0u	785		36	175J	Si	C242
88	R6221240CJ	1.2k	3.0u	785		36	175J	Si	C242
89	R6001220YA	1.2k	9.0u	785			190J	Si	DO9Ø
90	R6001225YA	1.2k	11u	785			175J	Si	DO9Ø
91	R6001230YA	1.2k	13u	785			150J	Si	DO9Ø
92	R6021325HSYA								
		1.3k	1.0u	785			150J		DO9Ø
93	R6221340HS00								
		1.3k	1.0u	785			150J		C242a
94	R6021335ESYA								
		1.3k	2.0u	785			150J		DO9Ø
95	R6221355ES00								
		1.3k	2.0u	785			150J		C242a
96	251UL130S30	1.3k	3.0u	785		45	175J	Si△	DO9Ø
97	R6021425HSYA								
		1.4k	1.0u	785			150J		DO9Ø
98	R6221440HS00								
		1.4k	1.0u	785			150J		C242a
99	251UL140S20	1.4k	2.0u	785			175J	Si	DO9
100	R6021420EJYA								
		1.4k	2.0u	785		36	175J	Si	DO9Ø
101	R6021425EJYA								
		1.4k	2.0u	785		36	175J	Si	DO9Ø
102	R6021435ESYA								
		1.4k	2.0u	785			150J		DO9Ø
103	R6221435EJ	1.4k	2.0u	785		36	175J	Si	C242
104	R6221440EJ	1.4k	2.0u	785		36	175J	Si	C242
105	R6221455ES00								
		1.4k	2.0u	785			150J		C242a
106	251UL140S25	1.4k	2.5u	785			175J	Si	DO9
107	251UL140S30	1.4k	3.0u	785		45	175J	Si△	DO9Ø
108	R6021420CJYA								
		1.4k	3.0u	785		36	175J	Si	DO9Ø
109	R6021425CJYA								
		1.4k	3.0u	785		36	175J	Si	DO9Ø
110	R6221435CJ	1.4k	3.0u	785		36	175J	Si	C242
111	R6221440CJ	1.4k	3.0u	785		36	175J	Si	C242
112	R6001420YA	1.4k	9.0u	785			190J	Si	DO9Ø
113	R6001425YA	1.4k	11u	785			175J	Si	DO9Ø
114	R6001430YA	1.4k	13u	785			150J	Si	DO9Ø
115	251UL150S30	1.5k	3.0u	785		45	175J	Si△	DO9Ø
116	R6021625CJYA								
		1.6k	1.5u	785		36	175J	Si	DO9Ø
117	R6021620EJYA								
		1.6k	2.0u	785		36	175J	Si	DO9Ø
118	R6021625EJYA								
		1.6k	2.0u	785		36	175J	Si	DO9Ø
119	R6221635EJ	1.6k	2.0u	785		36	175J	Si	C242
120	R6221640EJ	1.6k	2.0u	785		36	175J	Si	C242
121	251UL160S25	1.6k	2.5u	785			175J	Si	DO9
122	251UL160S30	1.6k	3.0u	785		45	175J	Si△	DO9Ø
123	R6021620CJYA								
		1.6k	3.0u	785		36	175J	Si	DO9Ø
124	R6221635CJ	1.6k	3.0u	785		36	175J	Si	C242
125	R6221640CJ	1.6k	3.0u	785		36	175J	Si	C242
126	R6001620YA	1.6k	9.0u	785			190J	Si	DO9Ø
127	R6001625YA	1.6k	11u	785			175J	Si	DO9Ø
128	R6001630YA	1.6k	13u	785			150J	Si	DO9Ø
129	251UL180S25	1.8k	2.5u	785			175J	Si	DO9
130	R6001820YA	1.8k	9.0u	785			190J	Si	DO9Ø
131	R6001825YA	1.8k	11u	785			175J	Si	DO9Ø
132	R6001830YA	1.8k	13u	785			150J	Si	DO9Ø
133	R6002020YA	2.0k	9.0u	785			190J	Si	DO9Ø
134	R6002025YA	2.0k	11u	785			175J	Si	DO9Ø
135	R6002030YA	2.0k	13u	785			150J	Si	DO9Ø
136	R6002220YA	2.2k	9.0u	785			190J	Si	DO9Ø
137	R6002225YA	2.2k	11u	785			175J	Si	DO9Ø
138	R6002230YA	2.2k	13u	785			150J	Si	DO9Ø
139	R6002420YA	2.4k	9.0u	785			190J	Si	DO9Ø
140	R6002425YA	2.4k	11u	785			175J	Si	DO9Ø
141	R6002430YA	2.4k	13u	785			150J	Si	DO9Ø
142	R6002620YA	2.6k	9.0u	785			190J	Si	DO9Ø
143	R6002625YA	2.6k	11u	785			175J	Si	DO9Ø
144	R6002630YA	2.6k	13u	785			150J	Si	DO9Ø
145	R6002820YA	2.8k	9.0u	785			190J	Si	DO9Ø
146	R6002825YA	2.8k	11u	785			175J	Si	DO9Ø
147	R6003020YA	3.0k	9.0u	785			190J	Si	DO9Ø
148	R6003025YA	3.0k	11u	785			175J	Si	DO9Ø
149	ARF2012P01	100	4.0u	800			150J	Si△	M1006§
150	ARF2012S01	100	4.0u	800			150J	Si△	M1006♦
151	SM02CXC220	200	3.0u	800			125J		DO200AB
152	ARF2012P02	200	4.0u	800			150J	Si△	M1006§
153	ARF2012S02	200	4.0u	800			150J	Si△	M1006♦
154	R7220308EJ	300	2.0u	800			175J	Si	C246
155	R7220308CJ	300	3.0u	800			175J	Si	C246
156	ARF2012P03	300	4.0u	800			150J	Si△	M1006§
157	ARF2012S03	300	4.0u	800			150J	Si△	M1006♦
158	R7220308AJ	300	5.0u	800			175J	Si	C246
159	SM04CXC220	400	3.0u	800			125J		DO200AB
160	ARF2012P04#	400	4.0u	800			150J	Si△	M1006§
161	ARF2012S04	400	4.0u	800			150J	Si△	M1006♦
162	R7220508EJ	500	2.0u	800			175J	Si	C246
163	R7220508CJ	500	3.0u	800			175J	Si	C246
164	ARF2012P05	500	4.0u	800			150J	Si△	M1006§

SYMBOLS AND CODES EXPLAINED IN INTERPRETER

4. HIGH-SPEED DIODES - Fast Recovery/Switching (Cont'd)

IN ORDER OF: (1) IF TEST (2) PIV (3) trr & (4) & VF & (5) TYPE NUMBER

LINE No.	5 TYPE NO.	2 PIV (V)	RECOVERY TIME 3 trr (s)	TEST CONDITIONS 1 IF (A)	4 VR (V)	IR (A)	MAX. TEMP (°C)	MAT.	DRAWING NO.
1	ARF2012S05	500	4.0u	800			150J	SiΔ	M1006♦
2	R7220508AJ	500	5.0u	800			175J	Si	C246
3	SM06CXC220	600	3.0u	800			125J		DO200AB
4	ARF2012P06	600	4.0u	800			150J	SiΔ	M1006§
5	ARF2012S06	600	4.0u	800			150J	SiΔ	M1006♦
6	R7220708EJ	700	2.0u	800			175J	Si	C246
7	R7220708CJ	700	3.0u	800			175J	Si	C246
8	ARF2012P07	700	4.0u	800			150J	SiΔ	M1006§
9	ARF2012S07	700	4.0u	800			150J	SiΔ	M1006♦
10	R7220708AJ	700	5.0u	800			175J	Si	C246
11	SM08CXC220	800	3u	800	50		125	SiΔ	DO200AB
12	ARF2012P08	800	4.0u	800			150J	SiΔ	M1006§
13	ARF2012S08	800	4.0u	800			150J	SiΔ	M1006♦
14	R7220908EJ	900	2.0u	800			175J	Si	C246
15	R7220908CJ	900	3.0u	800			175J	Si	C246
16	ARF2012P09	900	4.0u	800			150J	SiΔ	M1006§
17	ARF2012S09	900	4.0u	800			150J	SiΔ	M1006♦
18	R7220908AJ	900	5.0u	800			175J	Si	C246
19	SM10CXC220	1.0k	3u	800	50		125	SiΔ	DO200AB
20	ARF2012P10	1.0k	4.0u	800			150J	SiΔ	M1006§
21	ARF2012S10	1.0k	4.0u	800			150J	SiΔ	M1006♦
22	R7221108EJ	1.1k	2.0u	800			175J	Si	C246
23	R7221108CJ	1.1k	3.0u	800			175J	Si	C246
24	ARF2012P11	1.1k	4.0u	800			150J	SiΔ	M1006§
25	ARF2012S11	1.1k	4.0u	800			150J	SiΔ	M1006♦
26	R7221108AJ	1.1k	5.0u	800			175J	Si	C246
27	SM12CXC220	1.2k	3u	800	50		125	SiΔ	DO200AB
28	ARF2012P12	1.2k	4.0u	800			150J	SiΔ	M1006§
29	ARF2012S12	1.2k	4.0u	800			150J	SiΔ	M1006♦
30	R7221308CJ	1.3k	3.0u	800			175J	Si	C246
31	ARF2012P13	1.3k	4.0u	800			150J	SiΔ	M1006§Ω
32	ARF2012S13	1.3k	4.0u	800			150J	SiΔ	M1006♦
33	R7221308AJ	1.3k	5.0u	800			175J	Si	C246
34	SM14CXC220	1.4k	3u	800	50		125	SiΔ	DO200ab
35	ARF2012P14	1.4k	4.0u	800			150J	SiΔ	M1006§
36	ARF2012S14	1.4k	4.0u	800			150J	SiΔ	M1006♦
37	SM14CXC224	1.4k	6u	800	50		125	SiΔ	DO200AB
38	R7221508CJ	1.5k	3.0u	800			175J	Si	C246
39	ARF2012P15	1.5k	4.0u	800			150J	SiΔ	M1006§
40	ARF2012S15	1.5k	4.0u	800			150J	SiΔ	M1006♦
41	R7221508AJ	1.5k	5.0u	800			175J	Si	C246
42	SM16CXC220	1.6k	3u	800	50		125	SiΔ	DO200ab
43♦	ARF2012P16	1.6k	4.0u	800			150J	Si	M1006
44	ARF2012S16	1.6k	4.0u	800			150J	SiΔ	M1006♦
45	250MLAB160	1.6k	4.5uC	800			125J	Si	S435d
46	353PJLA160	1.6k	4.5uC	800			125J	Si	M1246
47	SM16CXC224	1.6k	6u	800	50		125	SiΔ	DO200AB
48	ARF2012P17	1.7k	4.0u	800			150J	Si	C245c
49	ARF2012S17	1.7k	4.0u	800			150J	SiΔ	M1006♦
50	ARF2012P18	1.8k	4.0u	800			150J	Si	C245c
51	ARF2012S18	1.8k	4.0u	800			150J	SiΔ	M1006♦
52	250MLAB180	1.8k	4.5uC	800			125J	Si	S435d
53	353PJLA180	1.8k	4.5uC	800			125J	Si	M1246
54	SM18CXC224	1.8k	6u	800	50		125	SiΔ	DO200AB
55	ARF2012P19	1.9k	4.0u	800			150J	Si	C245c
56	ARF2012S19	1.9k	4.0u	800			150J	SiΔ	M1006♦
57	ARF2012P20	2.0k	4.0u	800			150J	Si	C245c
58	ARF2012S20	2.0k	4.0u	800			150J	SiΔ	M1006♦
59	250MLAB200	2.0k	4.5uC	800			125J	Si	S435d
60	353PJLA200	2.0k	4.5uC	800			125J	Si	M1246
61	SM20CXC224	2.0k	6u	800	50		125	SiΔ	DO200AB
62	ARF2012P21	2.1k	4.0u	800			150J	Si	C245c
63	ARF2012S21	2.1k	4.0u	800			150J	SiΔ	M1006♦
64	SM21CXC224	2.1k	6u	800	50		125	SiΔ	DO200AB
65	ARF2012P22	2.2k	4.0u	800			150J	Si	C245c
66	ARF2012S22	2.2k	4.0u	800			150J	SiΔ	M1006♦
67	DSD635-22A	2.2k	4.8u	800	2.2k		135	Si	
68	DSD635-22D	2.2k	5.0u	800	2.2k		135	Si	
69	ARF2012P23	2.3k	4.0u	800			150J	Si	C245c
70	ARF2012S23	2.3k	4.0u	800			150J	SiΔ	M1006♦
71	ARF2012P24	2.4k	4.0u	800			150J	Si	C245c
72	ARF2012S24	2.4k	4.0u	800			150J	SiΔ	M1006♦
73	ARF2012P25	2.5k	4.0u	800			150J	Si	C245c
74	ARF2012S25	2.5k	4.0u	800			150J	SiΔ	M1006♦
75	250MLAB250	2.5k	4.5uC	800			125J	Si	S435d
76	353PJLA250	2.5k	4.5uC	800			125J	Si	M1246
77	DSD625-25A	2.5k	4.8u	800	2.5k		135	Si	
78	DSD625-25D	2.5k	5.0u	800	2.5k		135	Si	
79	ARF2012P26	2.6k	4.0u	800			150J	Si	C245c
80	ARF2012S26	2.6k	4.0u	800			150J	SiΔ	M1006♦
81	DSD625-30A	3.0k	5.0u	800	2.5k		135	Si	
82	SM02CXC724	200	3.0u	1.0k			125J		DO200AB
83	SM04CXC724	400	3.0u	1.0k			125J		DO200AB
84	SM06CXC724	600	3.0u	1.0k			125J		DO200AB
85	SM08CXC724	800	3.0u	1.0k			125J		DO200AB
86	SM10CXC724	1.0k	3.0u	1.0k			125J		DO200AB
87	SM12CXC724	1.2k	3.0u	1.0k			125J		DO200AB
88	SM14CXC724	1.4k	3.0u	1.0k			125J		DO200AB
89	SM16CXC724	1.6k	3.0u	1.0k			125J		DO200AB
90	SM16CXC924	1.6k	4.9u	1.0k			125J		DO200AC
91	DSF2013SD17	1.7k	5.8u	1.0k			175J	Si	M985
92	SM18CXC724	1.8k	3.0u	1.0k			125J		DO200AB
93	SM18CXC924	1.8k	4.9u	1.0k			125J		DO200AC
94	DSF2013SD18	1.8k	5.8u	1.0k			175J	Si	M985
95	DSF2013SD19	1.9k	5.8u	1.0k			175J	Si	M985
96	SM20CXC924	2.0k	4.9u	1.0k			125J		DO200AC
97	DSF1112SM20	2.0k	5.5u	1.0k			175J		M953
98	DSF2013SD20	2.0k	5.8u	1.0k			175J	Si	M985
99	DSF1112SM21	2.1k	5.5u	1.0k			175J		M953
100	DSF2013SD21	2.1k	5.8u	1.0k			175J	Si	M985
101	DSF2030SD21	2.1k	6.0u	1.0k			175J		M985
102	DSF1114SM21	2.1k	6.5u	1.0k			175J	Si	M757
103	DSD1038-22A	2.2k	4.8u	1.0k	2.2k		135	Si	
104	SM22CXC924	2.2k	4.9u	1.0k			125J		DO200AC
105	DSD1038-22D	2.2k	5.5u	1.0k	2.2k		125	Si	
106	DSF1112SM22	2.2k	5.5u	1.0k			175J		M953
107	DSF2013SD22	2.2k	5.8u	1.0k			175J	Si	M985
108	DSF2030SD22	2.2k	6.0u	1.0k			175J		M985
109	DSF1114SM22	2.2k	6.5u	1.0k			175J	Si	M757
110	DSF1112SM23	2.3k	5.5u	1.0k			175J		M953
111	DSF2013SD23	2.3k	5.8u	1.0k			175J	Si	M985
112	DSF2030SD23	2.3k	6.0u	1.0k			175J		M985
113	DSF1114SM23	2.3k	6.5u	1.0k			175J	Si	M757
114	SM24CXC924	2.4k	4.9u	1.0k			125J		DO200AC
115	DSF1112SM24	2.4k	5.5u	1.0k			175J		M953
116	DSF2013SD24	2.4k	5.8u	1.0k			175J	Si	M985
117	DSF2030SD24	2.4k	6.0u	1.0k			175J		M985
118	DSF1114SM24	2.4k	6.5u	1.0k			175J	Si	M757
119	DSD1028-25A	2.5k	4.8u	1.0k	2.5k		135	Si	
120	SM25CXC924	2.5k	4.9u	1.0k			125J		DO200AC
121	DSD1028-25D	2.5k	5.5u	1.0k	2.5k		125	Si	
122	DSF1112SM25	2.5k	5.5u	1.0k			175J		M953
123	DSF2013SD25	2.5k	5.8u	1.0k			175J	Si	M985
124	DSF2030SD25	2.5k	6.0u	1.0k			175J		M985
125	DSF1114SM25	2.5k	6.5u	1.0k			175J	Si	M757
126	FD1000FH50	2.5k	1.0mC	1.0k	150		125B	SiΔ	C244a
127	DSF2013SD26	2.6k	5.8u	1.0k			175J	Si	M985
128	DSF2030SD26	2.6k	6.0u	1.0k			175J		M985
129	DSF1114SM26	2.6k	6.5u	1.0k			175J	Si	M757
130	DSF2030SD27	2.7k	6.0u	1.0k			175J		M985
131	DSF1114SM27	2.7k	6.5u	1.0k			175J	Si	M757
132	DSF2030SD28	2.8k	6.0u	1.0k			175J		M985
133	DSF1114SM28	2.8k	6.5u	1.0k			175J	Si	M757
134	FD1000FH56	2.8k	1.0mC	1.0k	150		125B	SiΔ	C244a
135	DSF2030SD29	2.9k	6.0u	1.0k			175J		M985
136	DSF1114SM29	2.9k	6.5u	1.0k			175J	Si	M757
137	DSD1028-30A	3.0k	5.0u	1.0k	3.0k		135	Si	
138	DSF2030SD30	3.0k	6.0u	1.0k			175J		M985
139	DSF1114SM30	3.0k	6.5u	1.0k			175J	Si	M757
140	DSF2030SD31	3.1k	6.0u	1.0k			175J		M985
141	DSF2030SD32	3.2k	6.0u	1.0k			175J		M985
142	DSF2030SD33	3.3k	6.0u	1.0k			175J		M985
143	DSF2030SD34	3.4k	6.0u	1.0k			175J		M985
144	DSF2030SD35	3.5k	6.0u	1.0k			175J		M985
145	DSF2030SD36	3.6k	6.0u	1.0k			175J		M985
146	401PDA20L15	200	1.5u	1.2k			175J	Si	E200a
147	401PDA40L15	400	1.5u	1.2k		30	175J	SiΔ	E200a
148	401PDA60L15	600	1.5u	1.2k		30	175J	SiΔ	E200a
149	401PDA60L20	600	2.0u	1.2k		35	175J	SiΔ	E200a
150	120MLA60	600	35uC	1.2k			125J	Si	S12s
151	503PJLA60	600	35uC	1.2k			125J	Si	M1246
152	401PDA80L15	800	1.5u	1.2k		30	175J	SiΔ	E200a
153	401PDA80L20	800	2.0u	1.2k		35	175J	SiΔ	E200a
154	120MLA80	800	35uC	1.2k			125J	Si	S12s
155	503PJLA80	800	35uC	1.2k			125J	Si	M1246
156	401PDA100L20	1.0k	2.0u	1.2k		35	175J	SiΔ	E200a
157	401PDA100L25	1.0k	2.5u	1.2k			175J	Si	E200a
158	120MLA100	1.0k	35uC	1.2k			125J	Si	S12s
159	503PJLA100	1.0k	35uC	1.2k			125J	Si	M1246
160	DSD605-11A	1.1k	1.4u	1.2k			125J	Si	C246j
161	401PDA120L20	1.2k	2.0u	1.2k		35	175J	SiΔ	E200a
162	401PDA120L25	1.2k	2.5u	1.2k			175J	Si	E200a
163	120MLA120	1.2k	35uC	1.2k			125J	Si	S12s
164	503PJLA120	1.2k	35uC	1.2k			125J	Si	M1246
165	DSD605-14A	1.4k	1.4u	1.2k			125J	Si	C246j
166	401PDA140L20	1.4k	2.0u	1.2k			175J	Si	E200a
167	401PDA140L25	1.4k	2.5u	1.2k			175J	Si	E200a
168	DSD605-16A	1.6k	1.4u	1.2k			125J	Si	C246j
169	401PDA160L25	1.6k	2.5u	1.2k			175J	Si	E200a
170	DSD605-18A	1.8k	1.4u	1.2k			125J	Si	C246j
171	401PDA180L25	1.8k	2.5u	1.2k			175J	Si	E200a
172	401PDA180L30	1.8k	3.0u	1.2k			175J	Si	E200a
173	DSD605-20A	2.0k	1.4u	1.2k			125J	Si	C246j
174	401PDA100L30	1.0k	3.0u	1.3k		45	175J	SiΔ	E200a
175	401PDA120L30	1.2k	3.0u	1.3k		45	175J	SiΔ	E200a
176	401PDA140L30	1.4k	3.0u	1.3k		45	175J	SiΔ	E200a
177	401PDA160L30	1.6k	3.0u	1.3k		45	175J	SiΔ	E200a
178	R7220105EJ	100	2.0u	1.5k			175J	Si	C246
179	R7220106EJ	100	2.0u	1.5k			175J	Si	C246
180	R7220108EJ	100	2.0u	1.5k			175J	Si	C246
181	R9G20109CJ00	100	3.0u	1.5k		30	150J	Si	C246e
182	R9G20111CJ00	100	3.0u	1.5k		30	150J	Si	C246e
183	R9G20114CJ00	100	3.0u	1.5k		30	150J	Si	C246e
184	R7220105CJ	100	3.0u	1.5k			175J	Si	C246
185	R7220106CJ	100	3.0u	1.5k			175J	Si	C246
186	R7220108CJ	100	3.0u	1.5k			175J	Si	C246
187	R9G20109AJ00	100	5.0u	1.5k		60	150J	Si	C246e
188	R9G20111AJ00	100	5.0u	1.5k		60	150J	Si	C246e
189	R9G20114AJ00	100	5.0u	1.5k		60	150J	Si	C246e
190	R7220105AJ	100	5.0u	1.5k			175J	Si	C246
191	R7220106AJ	100	5.0u	1.5k			175J	Si	C246
192	R7220108AJ	100	5.0u	1.5k			175J	Si	C246
193♦	R7S00112XX00	100	7.0u	1.5k				Si	M1103
194♦	R7S00116XX00	100	7.0u	1.5k				Si	M1103
195	R7000105UA	100	9.0u	1.5k			175J	Si	S426☑
196	R7000104UA	100	11u	1.5k			175J	Si	S426☑
197	R7000103UA	100	15u	1.5k			175J	Si	S426☑
198	R7220205EJ	200	2.0u	1.5k			175J	Si	C246
199	R7220206EJ	200	2.0u	1.5k			175J	Si	C246

SYMBOLS AND CODES EXPLAINED IN INTERPRETER

4. HIGH-SPEED DIODES - Fast Recovery/Switching (Cont'd)

IN ORDER OF: (1) IF TEST (2) PIV
(3) trr & (4) & VF & (5) TYPE NUMBER

LINE No.	TYPE NO.	PIV (V)	RECOVERY TIME trr (s)	TEST CONDITIONS 1 IF (A)	4 VR (V)	IR (A)	MAX. TEMP (°C)	MAT.	DRAWING NO.
1	R7220208EJ	200	2.0u	1.5k			175J	Si	C246
2	R9G20209CJ00	200	3.0u	1.5k		30	150J	Si	C246e
3	R9G20211CJ00	200	3.0u	1.5k		30	150J	Si	C246e
4	R9G20214CJ00	200	3.0u	1.5k		30	150J	Si	C246e
5	R7220205CJ	200	3.0u	1.5k			175J	Si	C246
6	R7220206CJ	200	3.0u	1.5k			175J	Si	C246
7	R7220208CJ	200	3.0u	1.5k			175J	Si	C246
8	R9G20209AJ00	200	5.0u	1.5k		60	150J	Si	C246e
9	R9G20211AJ00	200	5.0u	1.5k		60	150J	Si	C246e
10	R9G20214AJ00	200	5.0u	1.5k		60	150J	Si	C246e
11	R7220205AJ	200	5.0u	1.5k			175J	Si	C246
12	R7220206AJ	200	5.0u	1.5k			175J	Si	C246
13	R7220208AJ	200	5.0u	1.5k			175J	Si	C246
14♦	R7S00208XX00	200	7.0u	1.5k				Si	M1103
15♦	R7S00212XX00	200	7.0u	1.5k				Si	M1103
16♦	R7S00216XX00	200	7.0u	1.5k				Si	M1103
17	R7000205UA	200	9.0u	1.5k			175J	Si	S426Ø
18	R7000204UA	200	11u	1.5k			175J	Si	S426Ø
19	R7000203UA	200	15u	1.5k			175J	Si	S426Ø
20♦	RA200248XX00	200	16u	1.5k				Si	M1104
21	R7S20409HS00	400	1.0u	1.5k			150J		M1103
22	R7220406HS00	400	1.0u	1.5k			150J		C246f
23	R7S20407ES00	400	2.0u	1.5k			150J		M1103
24	R7S20410ES00	400	2.0u	1.5k			150J		M1103
25	R7220405EJ	400	2.0u	1.5k			175J	Si	C246
26	R7220405ES00	400	2.0u	1.5k			150J		C246f
27	R7220406EJ	400	2.0u	1.5k			175J	Si	C246
28	R7220408EJ	400	2.0u	1.5k			175J	Si	C246
29	R7220408ES00	400	2.0u	1.5k			150J		M799f
30	R7S20408CS00	400	3.0u	1.5k			150J		M1103
31	R9G20409CJ00	400	3.0u	1.5k		30	150J	Si	C246e
32	R9G20411CJ00	400	3.0u	1.5k		30	150J	Si	C246e
33	R9G20412CS00	400	3.0u	1.5k			150J		C246e
34	R9G20414CJ00	400	3.0u	1.5k		30	150J	Si	C246e
35	R7220405CJ	400	3.0u	1.5k			175J	Si	C246
36	R7220406CJ	400	3.0u	1.5k			175J	Si	C246
37	R7220407CS00	400	3.0u	1.5k			150J		C246f
38	R7220408CJ	400	3.0u	1.5k			175J	Si	C246
39	R9G20409AJ00	400	5.0u	1.5k		60	150J	Si	C246e
40	R9G20411AJ00	400	5.0u	1.5k		60	150J	Si	C246e
41	R9G20414AJ00	400	5.0u	1.5k		60	150J	Si	C246e
42	R9G20415AS00	400	5.0u	1.5k			150J		C246e
43	R7220405AJ	400	5.0u	1.5k			175J	Si	C246
44	R7220406AJ	400	5.0u	1.5k			175J	Si	C246
45	R7220408AJ	400	5.0u	1.5k			175J	Si	C246
46♦	R7S00408XX00	400	7.0u	1.5k				Si	M1103
47♦	R7S00412XX00	400	7.0u	1.5k				Si	M1103
48♦	R7S00416XX00	400	7.0u	1.5k				Si	M1103
49	R7000405UA	400	9.0u	1.5k			175J	Si	S426Ø
50	R7000404UA	400	11u	1.5k			175J	Si	S426Ø
51	R7000403UA	400	15u	1.5k			175J	Si	S426Ø
52♦	RA200448XX00	400	16u	1.5k				Si	M1104
53	651PDB50L20	500	2.0u	1.5k			150J	Si	E200b
54	651PDB50L25	500	2.5u	1.5k			150J	Si	E200b
55	R7S20609HS00	600	1.0u	1.5k			150J		M1103
56	R7220606HS00	600	1.0u	1.5k			150J		C246f
57	R7S20607ES00	600	2.0u	1.5k			150J		M1103
58	R7S20610ES00	600	2.0u	1.5k			150J		M1103
59	R7220605EJ	600	2.0u	1.5k			175J	Si	C246
60	R7220605ES00	600	2.0u	1.5k			150J		C246f
61	R7220606EJ	600	2.0u	1.5k			175J	Si	C246
62	R7220608EJ	600	2.0u	1.5k			175J	Si	C246
63	R7220608ES00	600	2.0u	1.5k			150J		C246f
64	R7S20608CS00	600	3.0u	1.5k			150J		M1103
65	R9G20609CJ00	600	3.0u	1.5k		30	150J	Si	C246e
66	R9G20611CJ00	600	3.0u	1.5k		30	150J	Si	C246e
67	R9G20612CS00	600	3.0u	1.5k			150J		C246e
68	R9G20614CJ00	600	3.0u	1.5k		30	150J	Si	C246e
69	R7220605CJ	600	3.0u	1.5k			175J	Si	C246
70	R7220606CJ	600	3.0u	1.5k			175J	Si	C246
71	R7220607CS00	600	3.0u	1.5k			150J		C246f
72	R7220608CJ	600	3.0u	1.5k			175J	Si	C246
73	R9G20609AJ00	600	5.0u	1.5k		60	150J	Si	C246e
74	R9G20611AJ00	600	5.0u	1.5k		60	150J	Si	C246e
75	R9G20614AJ00	600	5.0u	1.5k		60	150J	Si	C246e
76	R9G20615AS00	600	5.0u	1.5k			150J		C246e
77	R7220605AJ	600	5.0u	1.5k			175J	Si	C246
78	R7220606AJ	600	5.0u	1.5k			175J	Si	C246
79	R7220608AJ	600	5.0u	1.5k			175J	Si	C246
80♦	R7S00608XX00	600	7.0u	1.5k				Si	M1103
81♦	R7S00612XX00	600	7.0u	1.5k				Si	M1103
82♦	R7S00616XX00	600	7.0u	1.5k				Si	M1103
83	R7000605UA	600	9.0u	1.5k			175J	Si	S426Ø
84	R7000604UA	600	11u	1.5k			175J	Si	S426Ø
85	R7000603UA	600	15u	1.5k			175J	Si	S426Ø
86♦	RA200648XX00	600	16u	1.5k				Si	M1104
87	R7S20709HS00	700	1.0u	1.5k			150J		M1103
88	R7220706HS00	700	1.0u	1.5k			150J		C246f
89	R7S20710ES00	700	2.0u	1.5k			150J		M1103
90	R7220708ES00	700	2.0u	1.5k			150J		C246f
91	R7S20809HS00	800	1.0u	1.5k			150J		M1103
92	R7220806HS00	800	1.0u	1.5k			150J		C246f
93	R7S20807ES00	800	2.0u	1.5k			150J		M1103
94	R7S20810ES00	800	2.0u	1.5k			150J		M1103
95	R7220805EJ	800	2.0u	1.5k			175J	Si	C246
96	R7220805ES00	800	2.0u	1.5k			150J		C246f
97	R7220806EJ	800	2.0u	1.5k			175J	Si	C246
98	R7220808EJ	800	2.0u	1.5k			175J	Si	C246
99	R7220808ES00	800	2.0u	1.5k			150J		C246f
100	R7S20808CS00	800	3.0u	1.5k			150J		M1103
101	R9G20809CJ00	800	3.0u	1.5k		30	150J	Si	C246e
102	R9G20811CJ00	800	3.0u	1.5k		30	150J	Si	C246e
103	R9G20812CS00	800	3.0u	1.5k			150J		C246e
104	R9G20814CJ00	800	3.0u	1.5k		30	150J	Si	C246e
105	R7220805CJ	800	3.0u	1.5k			175J	Si	C246
106	R7220806CJ	800	3.0u	1.5k			175J	Si	C246
107	R7220807CS00	800	3.0u	1.5k			150J		C246f
108	R7220808CJ	800	3.0u	1.5k			175J	Si	C246
109	R9G20809AJ00	800	5.0u	1.5k		60	150J	Si	C246e
110	R9G20811AJ00	800	5.0u	1.5k		60	150J	Si	C246e
111	R9G20814AJ00	800	5.0u	1.5k		60	150J	Si	C246e
112	R9G20815AS00	800	5.0u	1.5k			150J		C246e
113	R7220805AJ	800	5.0u	1.5k			175J	Si	C246
114	R7220806AJ	800	5.0u	1.5k			175J	Si	C246
115	R7220808AJ	800	5.0u	1.5k			175J	Si	C246
116♦	R7S00108XX00	800	7.0u	1.5k				Si	M1103
117♦	R7S00808XX00	800	7.0u	1.5k				Si	M1103
118♦	R7S00812XX00	800	7.0u	1.5k				Si	M1103
119♦	R7S00816XX00	800	7.0u	1.5k				Si	M1103
120	R7000805UA	800	9.0u	1.5k			175J	Si	S426Ø
121	R7000804UA	800	11u	1.5k			175J	Si	S426Ø
122	R7000803UA	800	15u	1.5k			175J	Si	S426Ø
123♦	RA200848XX00	800	16u	1.5k				Si	M1104
124	R7S20909HS00	900	1.0u	1.5k			150J		M1103
125	R7220906HS00	900	1.0u	1.5k			150J		C246f
126	R7S20910ES00	900	2.0u	1.5k			150J		M1103
127	R7220908ES00	900	2.0u	1.5k			150J		N779f
128	R7S21009HS00	1.0k	1.0u	1.5k			150J		M1103
129	R7221006HS00	1.0k	1.0u	1.5k			150J		C246f
130	R7S21010ES00	1.0k	2.0u	1.5k			150J		M1103
131	R7221005ES00	1.0k	2.0u	1.5k			150J		C246f
132	R7221006EJ	1.0k	2.0u	1.5k			175J	Si	C246
133	R7221008EJ	1.0k	2.0u	1.5k			175J	Si	C246
134	R7221008ES00	1.0k	2.0u	1.5k			150J		C246f
135	R7S21008CS00	1.0k	3.0u	1.5k			150J		M1103

SYMBOLS AND CODES
EXPLAINED IN INTERPRETER

4. HIGH-SPEED DIODES - Fast Recovery/Switching (Cont'd)

IN ORDER OF: (1) IF TEST (2) PIV (3) trr & (4) & VF & (5) TYPE NUMBER

LINE No.	5 TYPE NO.	2 PIV (V)	RECOVERY TIME 3 trr (s)	TEST CONDITIONS 1 IF (A)	4 VR (V)	IR (A)	MAX. TEMP (°C)	MAT.	DRAWING NO.
1	R9G21009CJ00	1.0k	3.0u	1.5k		30	150J	Si	C246e
2	R9G21011CJ00	1.0k	3.0u	1.5k		30	150J	Si	C246e
3	R9G21012CS00	1.0k	3.0u	1.5k			150J		C246e
4	R9G21014CJ00	1.0k	3.0u	1.5k		30	150J	Si	C246e
5	R7221006CJ	1.0k	3.0u	1.5k			175J	Si	C246
6	R7221007CS00	1.0k	3.0u	1.5k			150J		C246f
7	R7221008CJ	1.0k	3.0u	1.5k			175J	Si	C246
8	R9G21009AJ00	1.0k	5.0u	1.5k		60	150J	Si	C246e
9	R9G21011AJ00	1.0k	5.0u	1.5k		60	150J	Si	C246e
10	R9G21014AJ00	1.0k	5.0u	1.5k		60	150J	Si	C246e
11	R9G21015AS00	1.0k	5.0u	1.5k			150J		C246e
12	R7221006AJ	1.0k	5.0u	1.5k			175J	Si	C246
13	R7221008AJ	1.0k	5.0u	1.5k			175J	Si	C246
14♦	R7S01008XX00	1.0k	7.0u	1.5k				Si	M1103
15♦	R7S01012XX00	1.0k	7.0u	1.5k				Si	M1103
16♦	R7S01016XX00	1.0k	7.0u	1.5k				Si	M1103
17	R7001005UA	1.0k	9.0u	1.5k			175J	Si	S426Ø
18	R7001004UA	1.0k	11u	1.5k			175J	Si	S426Ø
19	R7001003UA	1.0k	15u	1.5k			175J	Si	S426Ø
20♦	RA201048XX00	1.0k	16u	1.5k				Si	M1104
21	R7S21109HS00	1.1k	1.0u	1.5k			150J		M1103
22	R7221106HS00	1.1k	1.0u	1.5k			150J		C246f
23	R7S21110ES00	1.1k	2.0u	1.5k			150J		M1103
24	R7221108ES00	1.1k	2.0u	1.5k			150J		C246f
25	R7S21209HS00	1.2k	1.0u	1.5k			150J		M1103
26	R7221206HS00	1.2k	1.0u	1.5k			150J		C246f
27	R7S21207ES00	1.2k	2.0u	1.5k			150J		M1103
28	R7S21210ES00	1.2k	2.0u	1.5k			150J		M1103
29	R7221205EJ	1.2k	2.0u	1.5k			175J	Si	C246
30	R7221205ES00	1.2k	2.0u	1.5k			150J		C246f
31	R7221206EJ	1.2k	2.0u	1.5k			175J	Si	C246
32	R7221208EJ	1.2k	2.0u	1.5k			175J	Si	C246
33	R7221208ES00	1.2k	2.0u	1.5k			150J		C246f
34	R7S21208CS00	1.2k	3.0u	1.5k			150J		M1103
35	R9G21209CJ00	1.2k	3.0u	1.5k		30	150J	Si	C246e
36	R9G21211CJ00	1.2k	3.0u	1.5k		30	150J	Si	C246e
37	R9G21212CS00	1.2k	3.0u	1.5k			150J		C246e
38	R9G21214CJ00	1.2k	3.0u	1.5k		30	150J	Si	C246e
39	R7221205CJ	1.2k	3.0u	1.5k			175J	Si	C246
40	R7221206CJ	1.2k	3.0u	1.5k			175J	Si	C246
41	R7221207CS00	1.2k	3.0u	1.5k			150J		C246f
42	R7221208CJ	1.2k	3.0u	1.5k			175J	Si	C246
43	R9G21209AJ00	1.2k	5.0u	1.5k		60	150J	Si	C246e
44	R9G21211AJ00	1.2k	5.0u	1.5k		60	150J	Si	C246e
45	R9G21214AJ00	1.2k	5.0u	1.5k		60	150J	Si	C246e
46	R9G21215AS00	1.2k	5.0u	1.5k			150J		C246e
47	R7221205AJ	1.2k	5.0u	1.5k			175J	Si	C246
48	R7221206AJ	1.2k	5.0u	1.5k			175J	Si	C246
49	R7221208AJ	1.2k	5.0u	1.5k			175J	Si	C246
50♦	R7S01208XX00	1.2k	7.0u	1.5k				Si	M1103
51♦	R7S01212XX00	1.2k	7.0u	1.5k				Si	M1103
52♦	R7S01216XX00	1.2k	7.0u	1.5k				Si	M1103
53	R7001205UA	1.2k	9.0u	1.5k			175J	Si	S426Ø
54	R7001204UA	1.2k	11u	1.5k			175J	Si	S426Ø
55	R7001203UA	1.2k	15u	1.5k			175J	Si	S426Ø
56♦	RA201248XX00	1.2k	16u	1.5k				Si	M1104
57	R7S21309HS00	1.3k	1.0u	1.5k			150J		M1103
58	R7221306HS00	1.3k	1.0u	1.5k			150J		C246f
59	R7S21310ES00	1.3k	2.0u	1.5k			150J		M1103
60	R7221308ES00	1.3k	2.0u	1.5k			150J		C246f
61	651PDB130L30	1.3k	3.0u	1.5k			150J	Si	E200b
62	R7S21409HS00	1.4k	1.0u	1.5k			150J		M1103
63	R7221406HS00	1.4k	1.0u	1.5k			150J		C246f
64	R7S21407ES00	1.4k	2.0u	1.5k			150J		M1103
65	R7S21410ES00	1.4k	2.0u	1.5k			150J		M1103
66	R7221405ES00	1.4k	2.0u	1.5k			150J		C246f
67	R7221408ES00	1.4k	2.0u	1.5k			150J		C246f
68	651PDB140L30	1.4k	3.0u	1.5k			150J	Si	E200b
69	R7S21408CS00	1.4k	3.0u	1.5k			150J		M1103
70	R9G21412CS00	1.4k	3.0u	1.5k			150J		C246e
71	R7221405CJ	1.4k	3.0u	1.5k			175J	Si	C246
72	R7221406CJ	1.4k	3.0u	1.5k			175J	Si	C246
73	R7221407CS00	1.4k	3.0u	1.5k			150J		C246f
74	R7221408CJ	1.4k	3.0u	1.5k			175J	Si	C246
75	R9G21409AJ00	1.4k	5.0u	1.5k		60	150J	Si	C246e
76	R9G21411AJ00	1.4k	5.0u	1.5k		60	150J	Si	C246e
77	R9G21415AS00	1.4k	5.0u	1.5k			150J		C246e
78	R7221405AJ	1.4k	5.0u	1.5k			175J	Si	C246
79	R7221406AJ	1.4k	5.0u	1.5k			175J	Si	C246
80	R7221408AJ	1.4k	5.0u	1.5k			175J	Si	C246
81♦	R7S01408XX00	1.4k	10u	1.5k				Si	M1103
82♦	R7S01412XX00	1.4k	10u	1.5k				Si	M1103
83	R7001404UA	1.4k	11u	1.5k			175J	Si	S426Ø
84	R7001403UA	1.4k	15u	1.5k			175J	Si	S426Ø
85♦	RA201425XX00	1.4k	22u	1.5k				Si	M1104
86♦	RA201436XX00	1.4k	22u	1.5k				Si	M1104
87	R7S21607ES00	1.6k	2.0u	1.5k			150J		M1103
88	R7221605ES00	1.6k	2.0u	1.5k			150J		C246f
89	651PDB160L30	1.6k	3.0u	1.5k			150J	Si	E200b
90	R7S21608CS00	1.6k	3.0u	1.5k			150J		M1103
91	R9G21612CS00	1.6k	3.0u	1.5k			150J		C246e
92	R7221605CJ	1.6k	3.0u	1.5k			175J	Si	C246
93	R7221606CJ	1.6k	3.0u	1.5k			175J	Si	C246
94	R7221607CS00	1.6k	3.0u	1.5k			150J		C246f
95	R7221608CJ	1.6k	3.0u	1.5k			175J	Si	C246
96	R9G21609AJ00	1.6k	5.0u	1.5k		60	150J	Si	C246e
97	R9G21611AJ00	1.6k	5.0u	1.5k		60	150J	Si	C246e
98	R9G21615AS00	1.6k	5.0u	1.5k			150J		C246e
99	R7221605AJ	1.6k	5.0u	1.5k			175J	Si	C246
100	R7221606AJ	1.6k	5.0u	1.5k			175J	Si	C246
101	R7221608AJ	1.6k	5.0u	1.5k			175J	Si	C246
102♦	R7S01608XX00	1.6k	10u	1.5k				Si	M1103
103♦	R7S01612XX00	1.6k	10u	1.5k				Si	M1103
104	R7001604UA	1.6k	11u	1.5k			175J	Si	S426Ø
105	R7001603UA	1.6k	15u	1.5k			175J	Si	S426Ø
106♦	RA201625XX00	1.6k	22u	1.5k				Si	M1104
107♦	RA201636XX00	1.6k	22u	1.5k				Si	M1104
108	R7S21807ES00	1.8k	2.0u	1.5k			150J		M1103
109	R7221805ES00	1.8k	2.0u	1.5k			150J		C246f
110	R7S21808CS00	1.8k	3.0u	1.5k			150J		M1103
111	R9G21812CS00	1.8k	3.0u	1.5k			150J		C246e
112	R7221807CS00	1.8k	3.0u	1.5k			150J		C246f
113	R9G21809AJ00	1.8k	5.0u	1.5k		60	150J	Si	C246e
114	R9G21811AJ00	1.8k	5.0u	1.5k		60	150J	Si	C246e
115	R9G21815AS00	1.8k	5.0u	1.5k			150J		C246e
116	R7221805AJ	1.8k	5.0u	1.5k			175J	Si	C246
117♦	R7S01808XX00	1.8k	10u	1.5k				Si	M1103
118♦	R7S01812XX00	1.8k	10u	1.5k				Si	M1103
119	R7001804UA	1.8k	11u	1.5k			175J	Si	S426Ø
120	R7001803UA	1.8k	15u	1.5k			175J	Si	S426Ø
121♦	RA201825XX00	1.8k	22u	1.5k				Si	M1104
122♦	RA201836XX00	1.8k	22u	1.5k				Si	M1104
123	R7S22007ES00	2.0k	2.0u	1.5k			150J		M1103
124	R7222005ES00	2.0k	2.0u	1.5k			150J		C246f
125	R7S22008CS00	2.0k	3.0u	1.5k			150J		M1103
126	R9G22012CS00	2.0k	3.0u	1.5k			150J		C246e
127	R7222007CS00	2.0k	3.0u	1.5k			150J		C246f
128	R9G22009AJ00	2.0k	5.0u	1.5k		60	150J	Si	C246e

SYMBOLS AND CODES EXPLAINED IN INTERPRETER

IN ORDER OF: (1) IF TEST (2) PIV (3) trr & (4) & VF & (5) TYPE NUMBER

LINE No.	5 TYPE NO.	2 PIV (V)	RECOVERY TIME 3 trr (s)	TEST CONDITIONS 1 IF (A)	4 VR (V)	IR (A)	MAX. TEMP (°C)	MAT.	DRAWING NO.
1	R9G22011AJ00	2.0k	5.0u	1.5k		60	150J	Si	C246e
2	R9G22015AS00	2.0k	5.0u	1.5k			150J		C246e
3	R7222005AJ	2.0k	5.0u	1.5k			150J	Si	C246
4♦	R7S02008XX00	2.0k	10u	1.5k				Si	M1103
5♦	R7S02012XX00	2.0k	10u	1.5k				Si	M1103
6	R7002004UA	2.0k	11u	1.5k			175J	Si	S426⊘
7	R7002003UA	2.0k	15u	1.5k			175J	Si	S426⊘
8♦	RA202025XX00	2.0k	22u	1.5k				Si	M1104
9	RA202036XX00	2.0k	22u	1.5k				Si	C246n
10	R7222105AJ	2.1k	5.0u	1.5k			150J	Si	C246
11	R7S22207ES00	2.2k	2.0u	1.5k			150J		M1103
12	R7222205ES00	2.2k	2.0u	1.5k			150J		C246f
13	R7S22208CS00	2.2k	3.0u	1.5k			150J		M1103
14	R9G22212CS00	2.2k	3.0u	1.5k			150J		C246e
15	R7222207CS00	2.2k	3.0u	1.5k			150J		C246f
16	R9G22209AJ00	2.2k	5.0u	1.5k		60	150J	Si	C246e
17	R9G22215AS00	2.2k	5.0u	1.5k			150J		C246e
18	R7222205AJ	2.2k	5.0u	1.5k			150J	Si	C246
19♦	R7S02208XX00	2.2k	10u	1.5k				Si	M1103
20♦	R7S02212XX00	2.2k	10u	1.5k				Si	M1103
21	R7002203UA	2.2k	15u	1.5k			175J	Si	S426⊘
22♦	RA202225XX00	2.2k	25u	1.5k				Si	M1104
23	R9G22412CS00	2.4k	3.0u	1.5k			150J		C246e
24	R9G22409AJ00	2.4k	5.0u	1.5k		60	150J	Si	C246e
25	R9G22415AS00	2.4k	5.0u	1.5k			150J		C246e
26	R7222405AJ	2.4k	5.0u	1.5k			150J	Si	C246
27	R7002403UA	2.4k	15u	1.5k			175J	Si	S426⊘
28♦	RA202425XX00	2.4k	25u	1.5k				Si	M1104
29	R7S22507ES00	2.5k	2.0u	1.5k			150J		M1103
30	R7222505ES00	2.5k	2.0u	1.5k			150J		C246f
31	R7S22508CS00	2.5k	3.0u	1.5k			150J		M1103
32	R7222507CS00	2.5k	3.0u	1.5k			150J		C246f
33	R7222505AJ	2.5k	5.0u	1.5k			150J	Si	C246
34	R9G22612CS00	2.6k	3.0u	1.5k			150J		C246e
35	R9G22609AJ00	2.6k	5.0u	1.5k		60	150J	Si	C246e
36	R9G22615AS00	2.6k	5.0u	1.5k			150J		C246e
37	R7002603UA	2.6k	15u	1.5k			175J	Si	S426⊘
38♦	RA202625XX00	2.6k	25u	1.5k				Si	M1104
39	R9G22812CS00	2.8k	3.0u	1.5k			150J		C246e
40	R9G22809AJ00	2.8k	5.0u	1.5k		60	150J	Si	C246e
41	R9G22815AS00	2.8k	5.0u	1.5k			150J		C246e
42	R7002803UA	2.8k	15u	1.5k			175J	Si	S426⊘
43♦	RA202825XX00	2.8k	25u	1.5k				Si	M1104
44	R9G23012CS00	3.0k	3.0u	1.5k			150J		C246e
45	R9G23009AJ00	3.0k	5.0u	1.5k		60	150J	Si	C246e
46	R9G23015AS00	3.0k	5.0u	1.5k			150J		C246e
47	R7003003UA	3.0k	15u	1.5k			175J	Si	S426⊘
48♦	RA203025XX00	3.0k	25u	1.5k				Si	M1104
49	R9G23212CS00	3.2k	3.0u	1.5k			150J		C246e
50	R9G23209AJ00	3.2k	5.0u	1.5k		60	150J	Si	C246e
51	R9G23215AS00	3.2k	5.0u	1.5k			150J		C246e
52	R9G23512CS00	3.5k	3.0u	1.5k			150J		C246e
53	R9G23515AS00	3.5k	5.0u	1.5k			150J		C246e
54	R7003503UA	3.5k	15u	1.5k			175J	Si	S426⊘
55	R7004003UA	4.0k	15u	1.5k			175J	Si	S426⊘
56	651PDB40L20	400	2.0u	2.0k		33	150J	Si△	E200b
57	651PDB40L25	400	2.5u	2.0k		41	150J	Si△	E200b
58	651PDB60L20	600	2.0u	2.0k		33	150J	Si	E200b
59	651PDB60L25	600	2.5u	2.0k		41	150J	Si△	E200b
60	651PDB80L20	800	2.0u	2.0k		33	150J	Si△	E200b
61	651PDB80L25	800	2.5u	2.0k		41	150J	Si△	E200b
62	651PDB80L30	800	3.0u	2.0k		49	150J	Si△	E200b
63	651PDB100L25	1.0k	2.5u	2.0k		41	150J	Si△	E200b
64	651PDB100L30	1.0k	3.0u	2.0k		49	150J	Si△	E200b
65	651PDB120L25	1.2k	2.5u	2.0k		41	150J	Si△	E200b
66	651PDB120L30	1.2k	3.0u	2.0k		49	150J	Si△	E200b

FAST RECOVERY DUAL RECTIFIER

LINE No.	5 TYPE NO.	2 PIV (V)	RECOVERY TIME 3 trr (s)	TEST CONDITIONS 1 IF (A)	4 VR (V)	IR (A)	MAX. TEMP (°C)	MAT.	DRAWING NO.
70	MA153	40					125J	Si	M500a
71	MA156	40							M1237b
72	1S2836	50	4.0n				125J	Si$	M500b
73	1SS123	70	9.0n				150J	Si$	M500a
74	40F2R07	70	.25u				150S	Si	M1098
75	MA153A	80					125J	Si	M500a
76	40C2R10	100	.30u				150S	Si	M1098
77	40C2S10	100	.30u				150S	Si	M1098
78	40F2R15	150	.25u				150S	Si	M1098
79	40F2S15	150	.25u				150S	Si	M1098
80	40C2R20	200	.30u				150S	Si	M1098
81	40C2S20	200	.30u				150S	Si	M1098
82	40E2R20	200	.30u				150S	Si	M1098
83	40E2S20	200	.30u				150S	Si	M1098
84	40C2R30	300	.30u				150S	Si	M1098
85	40C2S30	300	.30u				150S	Si	M1098
86	40E2R40	400	.30u				150S	Si	M1098
87	40E2S40	400	.30u				150S	Si	M1098
88	40E2R60	600	.30u				150S	Si	M1098
89	40E2S60	600	.30u				150S	Si	M1098
90	40F2S07	700	.25u				150S	Si	M1098
91	DA-4N	35	4.0n	5.0m	6.0		150J	Si	M1279
92	DA-4P	35	4.0n	5.0m	6.0		150J	Si	M1279
93	DA-8N	35	4.0n	5.0m	6.0		150J	Si	M1279a
94	DA-8P	35	4.0n	5.0m	6.0		150J	Si	M1279a
95	1N4242	40	2.0n	10m	6.0	1.0m	200S	Si	M117a
96	1N4243	40	2.0n	10m	6.0	1.0m	200S	Si	M117a
97	MA154WK	40	3.0n	10m	6.0	1.0m			M1237a
98	MA157	40	3.0n	10m	6.0	1.0m			M500
99	MA159	40	3.0n	10m	6.0	1.0m			M1238
100	MA160	40	3.0n	10m	6.0	1.0m			M1238a
101	MA175WK	40	3.0n	10m	6.0	1.0m			C250a
102	MA154WA	40	10n	10m	6.0	1.0m			M1237
103	MA175WA	40	10n	10m	6.0	1.0m			C250
104	1N4306	50	2.0n	10m	6.0	1.0m	150	Si$#	M117
105	1N4307	50	2.0n	10m	6.0	1.0m	150	Si$#	M118
106	BAV70	70	6.0n	10m	1.0	1.0m	150J	Si$#	M500
107	BAV99	70	6.0n	10m	1.0	1.0m	150J	Si$#	M500a
108	BAW56	70	6.0n	10m	1.0	1.0m	150J	Si$#	M500b
109	HD2A	75	6.0n	10m	1.0	10m		Si#	M500
110	HD4A	75	6.0n	10m	1.0	10m		Si#	M500b
111	MA155WK	80	3.0n	10m	6.0	1.0m			M1237a
112	MA157A	80	3.0n	10m	6.0	1.0m			M500
113	MA159A	80	3.0n	10m	6.0	1.0m			M1238
114	MA160A	80	3.0n	10m	6.0	1.0m			M1238a
115	MA176WK	80	3.0n	10m	6.0	1.0m			C250a
116	MA155WA	80	10n	10m	6.0	1.0m			M1237
117	MA176WA	80	10n	10m	6.0	1.0m			C250
118	SDBAX12(A)	90	60n	30m	3.0	3.0m	150J	Si#	M500a
119	BAY85S(A)	240	50n	30m		30m	150J	Si#	M500a
120♦	ESAD33-02C	200	100n	100m		100m	125J		M1192
121	S3KD20	200	300n	100m		300m	150J		M1048a
122	S12KC20	200	300n	200m		600m	150J		M1135
123♦	5CH1M	100	350n	400m		800m	132C	Si	M1026
124	12CH1FM	100	350n	.40			150J		M1205
125	24CH1FM	100	350n	.40		.80	150J		M1205
126♦	5CH2M	200	350n	400m		800m	132C	Si	M1026
127	12CH2FM	200	350n	.40			150J		M1205
128	24CH2FM	200	350n	.40		.80	150J		M1205
129♦	5CH3M	300	350n	400m		800m	132C	Si	M1026
130	12CH3FM	300	350n	.40			150J		M1205
131	24CH3FM	300	350n	.40		.80	150J		M1205
132♦	5CH4M	400	350n	400m		800m	132C	Si	M1026
133	12CH4FM	400	350n	.40			150J		M1205
134	24CH4FM	400	350n	.40		.80	150J		M1205
135	SRSHED05	50	25n	500m		1.0	150		M1185
136	SRSHEN05	50	25n	500m		1.0	150		M1185
137	SRSHEP05	50	25n	500m		1.0	150		M1185
138	GI1401	50	35n	0.5		1.0	150S		Y220
139	GI2401	50	35n	0.5		1.0	150S		Y220
140▼	SDA382AD	50	50n	500m	50	1.0	175	Si	C238e
141▼	SDA382AN	50	50n	500m	50	1.0	175	Si	C238e
142▼	SDA382AP	50	50n	500m	50	1.0	175	Si	C238e
143▼	SDA381AD	50	150n	500m	50	1.0	175	Si	C238e
144▼	SDA381AN	50	150n	500m	50	1.0	175	Si	C238e
145▼	SDA381AP	50	150n	500m	50	1.0	175	Si	C238e
146	SHCDA05FR	50	150n	500m		1.0	150		M1314
147	SHCNA05FR	50	150n	500m		1.0	150		M1314
148	SHCPA05FR	50	150n	500m		1.0	150		M1314
149▼	SDA380AD	50	4.0u	500m	50	1.0	175	Si	C238e
150▼	SDA380AN	50	4.0u	500m	50	1.0	175	Si	C238e
151▼	SDA380AP	50	4.0u	500m	50	1.0	175	Si	C238e
152	SRSHED10	100	25n	500m		1.0	150		M1185
153	SRSHEN10	100	25n	500m		1.0	150		M1185
154	SRSHEP10	100	25n	500m		1.0	150		M1185
155	GI1402	100	35n	0.5		1.0	150S		Y220
156	GI2402	100	35n	0.5		1.0	150S		Y220
157▼	SDA382BD	100	50n	500m	100	1.0	175	Si	C238e
158▼	SDA382BN	100	50n	500m	100	1.0	175	Si	C238e
159▼	SDA382BP	100	50n	500m	100	1.0	175	Si	C238e
160▼	SDA381BD	100	150n	500m	100	1.0	175	Si	C238e
161▼	SDA381BN	100	150n	500m	100	1.0	175	Si	C238e
162	SHCDA10FR	100	150n	500m		1.0	150		M1314
163	SHCNA10FR	100	150n	500m		1.0	150		M1314
164	SHCPA10FR	100	150n	500m		1.0	150		M1314
165▼	SDA380BD	100	4.0u	500m	100	1.0	175	Si	C238e
166▼	SDA380BN	100	4.0u	500m	100	1.0	175	Si	C238e
167▼	SDA380BP	100	4.0u	500m	100	1.0	175	Si	C238e
168▼	SDA381BP	100	150u	500m	100	1.0	175	Si	C238e
169	SRSHED15	150	25n	500m		1.0	150		M1185
170	SRSHEN15	150	25n	500m		1.0	150		M1185
171	SRSHEP15	150	25n	500m		1.0	150		M1185
172	GI1403	150	35n	0.5		1.0	150S		Y220
173	GI2403	150	35n	0.5		1.0	150S		Y220
174	GI1404	200	35n	0.5		1.0	150S		Y220

SYMBOLS AND CODES EXPLAINED IN INTERPRETER

4. HIGH-SPEED DIODES - Fast Recovery Dual Rectifier (Cont'd)

IN ORDER OF: (1) IF TEST (2) PIV (3) trr & (4) & VF & (5) TYPE NUMBER

LINE No.	5 TYPE NO.	2 PIV (V)	3 trr (s)	RECOVERY TIME TEST CONDITIONS 1 IF (A)	4 VR (V)	IR (A)	MAX. TEMP (°C)	MAT.	DRAWING NO.
1	GI2404	200	35n	0.5		1.0	150S		Y220
2▼	SDA382CD	200	50n	500m	200	1.0	175	Si	C238e
3▼	SDA382CN	200	50n	500m	200	1.0	175	Si	C238e
4▼	SDA382CP	200	50n	500m	200	1.0	175	Si	C238e
5▼	SDA381CD	200	150n	500m	200	1.0	175	Si	C238e
6▼	SDA381CN	200	150n	500m	200	1.0	175	Si	C238e
7▼	SDA381CP	200	150n	500m	200	1.0	175	Si	C238e
8	SHCDA20FR	200	150n	500m		1.0	150		M1314
9	SHCNA20FR	200	150n	500m		1.0	150		M1314
10	SHCPA20FR	200	150n	500m		1.0	150		M1314
11▼	SDA380CD	200	4.0u	500m	200	1.0	175	Si	C238e
12▼	SDA380CN	200	4.0u	500m	200	1.0	175	Si	C238e
13▼	SDA380CP	200	4.0u	500m	200	1.0	175	Si	C238e
14▼	SDA382DD	400	50n	500m	400	1.0	175	Si	C238e
15▼	SDA382DN	400	50n	500m	400	1.0	175	Si	C238e
16▼	SDA382DP	400	50n	500m	400	1.0	175	Si	C238e
17▼	SDA381DD	400	150n	500m	400	1.0	175	Si	C238e
18▼	SDA381DN	400	150n	500m	400	1.0	175	Si	C238e
19▼	SDA381DP	400	150n	500m	400	1.0	175	Si	C238e
20	SHCDA40FR	400	150n	500m		1.0	150		M1314
21	SHCNA40FR	400	150n	500m		1.0	150		M1314
22	SHCPA40FR	400	150n	500m		1.0	150		M1314
23▼	SDA380DD	400	4.0u	500m	400	1.0	175	Si	C238e
24▼	SDA380DN	400	4.0u	500m	400	1.0	175	Si	C238e
25▼	SDA380DP	400	4.0u	500m	400	1.0	175	Si	C238e
26▼	SDA382ED	600	50n	500m	600	1.0	175	Si	C238e
27▼	SDA382EN	600	50n	500m	600	1.0	175	Si	C238e
28▼	SDA382EP	600	50n	500m	600	1.0	175	Si	C238e
29▼	SDA381ED	600	150n	500m	600	1.0	175	Si	C238e
30▼	SDA381EN	600	150n	500m	600	1.0	175	Si	C238e
31▼	SDA381EP	600	150n	500m	600	1.0	175	Si	C238e
32	SHCDA60FR	600	150n	500m		1.0	150		M1314
33	SHCNA60FR	600	150n	500m		1.0	150		M1314
34	SHCPA60FR	600	150n	500m		1.0	150		M1314
35▼	SDA380ED	600	4.0u	500m	600	1.0	175	Si	C238e
36▼	SDA380EN	600	4.0u	500m	600	1.0	175	Si	C238e
37▼	SDA380EP	600	4.0u	500m	600	1.0	175	Si	C238e
38▼	SDA382FD	800	50n	500m	800	1.0	175	Si	C238e
39▼	SDA382FN	800	50n	500m	800	1.0	175	Si	C238e
40▼	SDA382FP	800	50n	500m	800	1.0	175	Si	C238e
41▼	SDA381FD	800	150n	500m	800	1.0	175	Si	C238e
42▼	SDA381FN	800	150n	500m	800	1.0	175	Si	C238e
43▼	SDA381FP	800	150n	500m	800	1.0	175	Si	C238e
44▼	SPD5191	800	250n	500m	800	250m	125	Si	M1024
45▼	SDA380FD	800	4.0u	500m	800	1.0	175	Si	C238e
46▼	SDA380FN	800	4.0u	500m	800	1.0	175	Si	C238e
47▼	SDA380FP	800	4.0u	500m	800	1.0	175	Si	C238e
48▼	SDA382GD	1.0k	50n	500m	1.0k	1.0	175	Si	C238e
49▼	SDA382GN	1.0k	50n	500m	1.0k	1.0	175	Si	C238e
50▼	SDA382GP	1.0k	50n	500m	1.0k	1.0	175	Si	C238e
51▼	SDA381GD	1.0k	150n	500m	1.0k	1.0	175	Si	C238e
52▼	SDA381GN	1.0k	150n	500m	1.0k	1.0	175	Si	C238e
53▼	SDA381GP	1.0k	150n	500m	1.0k	1.0	175	Si	C238e
54▼	SPD5192	1.0k	500n	500m	1.0k	250m	125	Si	M1024
55▼	SDA380GD	1.0k	4.0u	500m	1.0k	1.0	175	Si	C238e
56▼	SDA380GN	1.0k	4.0u	500m	1.0k	1.0	175	Si	C238e
57▼	SDA380GP	1.0k	4.0u	500m	1.0k	1.0	175	Si	C238e
58	SHCDA05HE	50	30n	1.0		1.0	150		M1314
59	SHCNA05HE	50	30n	1.0		1.0	150		M1314
60	SHCPA05HE	50	30n	1.0		1.0	150		M1314
61	BYW99P-50(A)	50	35n	1.0	30		150J		M1007b
62♦	MUR3005PT	50	35n	1.0			175J		M1340
63	BYV52-50	50	50n	1.0	30	0.2	150J	#	C263
64♦	MUR10005CT	50	50n	1.0			175J		C252
65	MUR20005CT	50	50n	1.0			175J		C252
66	R710XPT	50	100n	1.0	30		150J		M1340
67	R710X	50	200n	1.0	30		150J		TO3*
68	SPDA20205	50	300n	1.0		1.0	200J	Si#	TO3*
69	SPDA6205	60	125n	1.0		1.0	100	Si#	TO3*
70	SHCDA10HE	100	30n	1.0		1.0	150		M1314
71	SHCNA10HE	100	30n	1.0		1.0	150		M1314
72	SHCPA10HE	100	30n	1.0		1.0	150		M1314
73	BYW99P-100(A)	100	35n	1.0	30		150J		M1007b
74♦	MUR3010PT	100	35n	1.0			175J		M1340
75	BYV52-100	100	50n	1.0	30	0.2	150J	#	C263
76♦	MUR10010CT	100	50n	1.0			175J		C252
77	MUR20010CT	100	50n	1.0			175J		C252
78	R711XPT	100	100n	1.0	30		150J		M1340
79	SPDA20210	100	300n	1.0		1.0	200J	Si#	TO3*
80	689-1D(M)	100	500n	1.0		1.0	150		C238a
81	689-1N	100	500n	1.0		1.0	150		C238c
82	689-1P	100	500n	1.0		1.0	150		C238b
83	SPDA6210	120	125n	1.0		1.0	100	Si#	TO3*
84	SHCDA15HE	150	30n	1.0		1.0	150		M1314
85	SHCNA15HE	150	30n	1.0		1.0	150		M1314
86	SHCPA15HE	150	30n	1.0		1.0	150		M1314
87	BYW99P-150(A)	150	35n	1.0	30		150J		M1007b
88♦	MUR3015PT	150	35n	1.0			175J		M1340
89	BYV52-150	150	50n	1.0	30	0.2	150J	#	C263
90♦	MUR10015CT	150	50n	1.0			175J		C252
91	MUR20015CT	150	50n	1.0			175J		C252
92	BYW51-200	200	35n	1.0	30		150J	#	TO220*
93	BYW99P-200(A)	200	35n	1.0	30		150J		M1007b
94♦	MUR3020PT	200	35n	1.0			175J		M1340
95	BYV52-200	200	50n	1.0	30	0.2	150J	#	C263
96♦	MUR10020CT	200	50n	1.0			175J		C252
97	MUR20020CT	200	50n	1.0			175J		C252
98	R712XPT	200	100n	1.0	30		150J		M1340
99	SPDA20220	200	300n	1.0		1.0	200J	Si#	TO3*
100	689-2D(M)	200	500n	1.0		1.0	150		C238a
101	689-2N	200	500n	1.0		1.0	150		C238c
102	689-2P	200	500n	1.0		1.0	150		C238b
103	SPDA6220	240	125n	1.0		1.0	100	Si#	TO3*
104	SPDA20230	300	300n	1.0		1.0	200J	Si#	TO3*
105	689-3D	300	500n	1.0		1.0	150		C238a
106	689-3N	300	500n	1.0		1.0	150		C238c
107	689-3P	300	500n	1.0		1.0	150		C238b
108	SPDA6230	360	125n	1.0		1.0	100	Si#	TO3*
109	R714XPT	400	100n	1.0	30		150J		M1340
110	689-4D	400	500n	1.0		1.0	150		C238a
111	689-4N	400	500n	1.0		1.0	150		C238c
112	689-4P	400	500n	1.0		1.0	150		C238b
113	689-5D	500	500n	1.0		1.0	150		C238a
114	689-5N	500	500n	1.0		1.0	150		C238c
115	689-5P	500	500n	1.0		1.0	150		C238b
116	BYT230PI-600(A)	600	110n	1.0	30		150J		M1304
117	BYT230PIV-600(A)	600	110n	1.0	30		150J		M1305
118	689-6D	600	500n	1.0		1.0	150		C238a
119	689-6N	600	500n	1.0		1.0	150		C238c
120	689-6P	600	500n	1.0		1.0	150		C238b
121	BYT230PI-800(A)	800	110n	1.0	30		150J		M1304
122	BYT230PIV-800(A)	800	110n	1.0	30		150J		M1305
123	BYT230PI-1000(A)	1.0k	145n	1.0	30		150J		M1304
124	BYT230PIV-1000(A)	1.0k	145n	1.0	30		150J		M1305
125	5BL2C41	100	40n	2.0			120C	Si	M1026
126	10BL2C41	100	45n	2.0			115C	Si	M1026
127	5CL2C41	150	40n	2.0			120C	Si	M1026
128	10CL2C41	150	45n	2.0			115C	Si	M1026
129	5DL2C41	200	40n	2.0			120C	Si	M1026
130	10DL2C41	200	45n	2.0			115C	Si	M1026
131	5FWJ2C41	30	200n	2.5			135C	Si	M1026
132	5GWJ2C41	40	200n	2.5			135C	Si	M1026
133	S10SC3M	30	110n	5.0			125J	Si♦	M1048
134	10FWJ2C41	30	200n	5.0			150J	Si	M1026
135	S10SC4M	40	110n	5.0			125J	Si♦	M1048
136	10GWJ2C41	40	200n	5.0			150J	Si	M1026
137	S15SC3M	35	125n	7.5					M1135
138	S15SC4M	40	125n	7.5					M1135
139	S30SC3M	30	130n	15			125J	Si♦	M1135
140	S30SC4M	40	130n	15			125J	Si♦	M1135

FAST RECOVERY 1-∅ BRIDGE RECTIFIER

LINE No.	TYPE NO.	PIV (V)	trr (s)	IF (A)	VR (V)	IR (A)	MAX. TEMP (°C)	MAT.	DRAWING NO.
144	424FB1AB1	50	250n				125	Si	M1102a
145	424FB1AF1	50	250n				125	Si	M1232
146	524FB1AF1	50	250n				125	Si	M1232
147	dcB100F	50	250n				125	Si	M1231
148	424AB1AB1	100	250n				125	Si	M1102a
149	424AB1AF1	100	250n				125	Si	M1232
150	524AB1AF1	100	250n				125	Si	M1232
151	dcB101F	100	250n				125	Si	M1231
152	424BB1AB1	200	250n				125	Si	M1102a
153	424BB1AF1	200	250n				125	Si	M1232
154	524BB1AF1	200	250n				125	Si	M1232
155	dcB102F	200	250n				125	Si	M1231
156	424DB1AB1	400	250n				125	Si	M1102a
157	424DB1AF1	400	250n				125	Si	M1232
158	524DB1AF1	400	250n				125	Si	M1232
159	dcB104F	400	250n				125	Si	M1231
160	424MB1AB1	600	250n				125	Si	M1102a
161	424MB1AF1	600	250n				125	Si	M1232
162	524MB1AF1	600	250n				125	Si	M1232
163	dcB106F	600	250n				125	Si	M1231
164	PB111F	100	200n	10m		10m	125J	Si	C219g
165	676-1	100	500n	10m		10m	150		M1164
166	PB112F	200	200n	10m		10m	125J	Si	C219g
167	676-2	200	500n	10m		10m	150		M1164
168	676-3	300	500n	10m		10m	150		M1164
169	676-4	400	500n	10m		10m	150		M1164
170	676-5	500	500n	10m		10m	150		M1164
171	676-6	600	500n	10m		10m	150		M1164
172	676-12	1.2k	500n	10m		10m	150		M1166
173	676-18	1.8k	500n	10m		10m	150		M1166a
174	676-24	2.4k	500n	10m		10m	150		M1166b
175	676-30	3.0k	500n	10m		10m	150		M1166c
176	676-36	3.6k	500n	10m		10m	150		M1166d
177	676-42	4.2k	500n	10m		10m	150		M1166e
178	676-48	4.8k	500n	10m		10m	150		M1166f
179	676-50	5.0k	500n	10m		10m	150		M1166f
180	PMA104X	15k	250n	400m		800m	150		M1164
181	GI1301	50	30n	0.5		1.0	55		C224a
182	GI1302	100	30n	0.5		1.0	55		C224a
183	SPA25(M)	100	2.0u	500m		1.0	150		C253
184	GI1303	150	30n	0.5		1.0	55		C224a
185	GI1304	200	30n	0.5		1.0	55		C224a
186	SPB25(M)	200	2.0u	500m		1.0	150		C253
187	SPC25#B(M)	400	2.0u	500m		1.0	150		C253
188	SPD25(M)	600	2.0u	500m		1.0	150		C253
189	CG3	1.4k	15u	500m		50m	175	Si	C224a
190	BAW78A		1.0u	1.0	50			Si	M1008
191	BAW78B		1.0u	1.0	100			Si	M1008
192	BAW78C		1.0u	1.0	200			Si	M1008
193	BAW78D		1.0u	1.0	400			Si	M1008
194	BAW79A		1.0u	1.0	50			Si	M1008
195	BAW79B		1.0u	1.0	100			Si	M1008
196	BAW79C		1.0u	1.0	200			Si	M1008
197	BAW79D		1.0u	1.0	400			Si	M1008
198	BYV54-50	50	60n	1.0	30	0.2	150J		M1177
199	BYV54V50	50	60n	1.0	30	0.2	150J	#	M1336
200	VE08X	50	200n	1.0		2.0	125J	Si	M904
201	VS048X	50	200n	1.0		2.0	135J	Si	M532a
202	BYV54-100	100	60n	1.0	30	0.2	150J		M1177
203	BYV54V100	100	60n	1.0	30	0.2	150J	#	M1336
204	E10FS1	100	100n	1.0			150J	Si	M1008a
205	VE18X	100	200n	1.0		2.0	125J	Si	M904
206	VS148X	100	200n	1.0		2.0	135J	Si	M532a
207	VYA100X	100	200n	1.0		2.0	150J	Si△	M863
208	VYA100XL	100	200n	1.0		2.0	150J	Si△	M863a
209	VYA100XT	100	200n	1.0		2.0	150J	Si△	M865a
210	VYB100X	100	200n	1.0		2.0	150J	Si△	M683b

SYMBOLS AND CODES EXPLAINED IN INTERPRETER

4. HIGH-SPEED DIODES - Single Phase Bridge (Cont'd)

IN ORDER OF: (1) IF TEST (2) PIV (3) trr & (4) & VF & (5) TYPE NUMBER

LINE No.	5 TYPE NO.	2 PIV (V)	RECOVERY TIME 3 trr (s)	TEST CONDITIONS 1 IF (A)	4 VR (V)	IR (A)	MAX. TEMP (°C)	MAT.	DRAWING NO.
1	VYB100XL	100	200n	1.0		2.0	150J	SiΔ	M863c
2	VYB100XT	100	200n	1.0		2.0	150J	SiΔ	M865b
3	VYC100X	100	200n	1.0		2.0	150J	SiΔ	M863d
4	VYC100XL	100	200n	1.0		2.0	150J	SiΔ	M863e
5	VYC100XT	100	200n	1.0		2.0	150J	SiΔ	M865c
6	VYD100X	100	200n	1.0		2.0	150J	SiΔ	M863f
7	VYD100XL	100	200n	1.0		2.0	150J	SiΔ	M863g
8	VYD100XT	100	200n	1.0		2.0	150J	SiΔ	M865a
9	683-1	100	500n	1.0		1.0	150		C224g
10	698-1	100	500n	1.0		1.0	150		M1164
11	BYV54-150	150	60n	1.0	30	0.2	150J		M1177
12	BYV54V150	150	60n	1.0	30	0.2	150J	#	M1336
13	BYV54-200	200	60n	1.0	30	0.2	150J		M1177
14	BYV54V200	200	60n	1.0	30	0.2	150J	#	M1336
15	BYT230PI200	200	100n	1.0	30		150J		M1177
16	BYT230PIV200	200	100n	1.0	30		150J	#	M1336
17	E10FS2	200	100n	1.0			150J	Si	M1008a
18	VE28X	200	200n	1.0		2.0	125J	Si	M904
19	VS248X	200	200n	1.0		2.0	135J	Si	M532a
20	VYA200X	200	200n	1.0		2.0	150J	SiΔ	M863
21	VYA200XL	200	200n	1.0		2.0	150J	SiΔ	M863a
22	VYA200XT	200	200n	1.0		2.0	150J	SiΔ	M865a
23	VYB200X	200	200n	1.0		2.0	150J	SiΔ	M683b
24	VYB200XL	200	200n	1.0		2.0	150J	SiΔ	M863c
25	VYB200XT	200	200n	1.0		2.0	150J	SiΔ	M865b
26	VYC200X	200	200n	1.0		2.0	150J	SiΔ	M863d
27	VYC200XL	200	200n	1.0		2.0	150J	SiΔ	M863e
28	VYC200XT	200	200n	1.0		2.0	150J	SiΔ	M865c
29	VYD200X	200	200n	1.0		2.0	150J	SiΔ	M863f
30	VYD200XL	200	200n	1.0		2.0	150J	SiΔ	M863g
31	VYD200XT	200	200n	1.0		2.0	150J	SiΔ	M865a
32	683-2	200	500n	1.0		1.0	150		C224g
33	698-2	200	500n	1.0		1.0	150		M1164
34	BYT230PI300	300	100n	1.0	30		150J		M1177
35	BYT230PIV300	300	100n	1.0	30		150J	#	M1336
36	683-3	300	500n	1.0		1.0	150		C224g
37	698-3	300	500n	1.0		1.0	150		M1164
38	BYT230PI400	400	100n	1.0	30		150J		M1177
39	BYT230PIV400	400	100n	1.0	30		150J	#	M1336
40	VE48X	400	200n	1.0		2.0	125J	Si	M904
41	VS448X	400	200n	1.0		2.0	135J	Si	M532a
42	VYA400X	400	200n	1.0		2.0	150J	SiΔ	M863
43	VYA400XL	400	200n	1.0		2.0	150J	SiΔ	M863a
44	VYA400XT	400	200n	1.0		2.0	150J	SiΔ	M865a
45	VYB400X	400	200n	1.0		2.0	150J	SiΔ	M683b
46	VYB400XL	400	200n	1.0		2.0	150J	SiΔ	M863c
47	VYB400XT	400	200n	1.0		2.0	150J	SiΔ	M865b
48	VYC400X	400	200n	1.0		2.0	150J	SiΔ	M863d
49	VYC400XL	400	200n	1.0		2.0	150J	SiΔ	M863e
50	VYC400XT	400	200n	1.0		2.0	150J	SiΔ	M865c
51	VYD400X	400	200n	1.0		2.0	150J	SiΔ	M863f
52	VYD400XL	400	200n	1.0		2.0	150J	SiΔ	M863g
53	VYD400XT	400	200n	1.0		2.0	150J	SiΔ	M865a
54	683-4	400	500n	1.0		1.0	150		C224g
55	698-4	400	500n	1.0		1.0	150		M1164
56	683-5	500	500n	1.0		1.0	150		C224g
57	698-5	500	500n	1.0		1.0	150		M1164
58	VE68X	600	200n	1.0		2.0	125J	Si	M904
59	683-6	600	500n	1.0		1.0	150		C224g
60	698-6	600	500n	1.0		1.0	150		M1164

FAST RECOVERY 3-∅ BRIDGE RECTIFIER

LINE No.	TYPE NO.	PIV (V)	trr (s)	IF (A)	VR (V)	IR (A)	TEMP (°C)	MAT.	DRAWING NO.
64	682-1	100	500n	1.0		1.0	150		C232
65	696-1	100	500n	1.0		1.0	150		C232
66	682-2	200	500n	1.0		1.0	150		C232
67	696-2	200	500n	1.0		1.0	150		C232
68	682-3	300	500n	1.0		1.0	150		C232
69	696-3	300	500n	1.0		1.0	150		C232
70	682-4	400	500n	1.0		1.0	150		C232
71	696-4	400	500n	1.0		1.0	150		C232
72	682-5	500	500n	1.0		1.0	150		C232
73	696-5	500	500n	1.0		1.0	150		C232
74	682-6	600	500n	1.0		1.0	150		C232
75	696-6	600	500n	1.0		1.0	150		C232

Diodes that operate at 300 MHz and above can be found in the Microwave D.A.T.A.BOOK.

SYMBOLS AND CODES EXPLAINED IN INTERPRETER

5. GENERAL-PURPOSE RECTIFIERS

IN ORDER OF: (1) IO MAX (2) PIV (3) ° TEMP & (4) TYPE NMBER

LINE No.	4 TYPE NUMBER	2 PIV (V)	MAX AVG FWD DC CURRENT 1 Io MAX (A)	3 @ TEMP (°C)	MAX RATING SURGE CURR PEAK 1 Cy (A)	PULSE WIDTH (s)	MAX. TEMP (°C)	MAT	DRAWING No.
1	4FB5	50						Si	DO13
2	4FC5	50						Si	DO4
3	SCSPFF05	50					150	Si	
4	G5A3	50		150C	1.5k		175J	Si	DO8
5	4FB10	100						Si	DO13
6	4FC10	100						Si	DO4
7	G5B3	100		150C	1.5k		175J	Si	DO8
8	1N998	150					200S	Si	DO7
9	SCSDFF15L	150			750		150A	Si	M1185
10	SCSFF15	150			1.5k		150	Si	S545
11	SCSNFF15	150					150	Si	
12♦	SCSNFF15L	150			750		150A	Si	M1185
13	SCSPFF15L	150			750		150A	Si	M1185
14	4FB20	200						Si	DO13
15	4FC20	200						Si	DO4
16	S2V20	200			60	8.3m	150J	Si	
17	S3BR2F	200			25			Si	S81
18	S10VB20	200			200	8.3m	150J	Si	
19	G5C3	200		150C	1.5k		175J	Si	DO8
20	G5D3	250		150C	1.5k		175J	Si	DO8
21	4FB30	300						Si	DO13
22	4FC30	300						Si	DO4
23	G5E3	300		150C	1.5k		175J	Si	DO8
24	G5F3	350		150C	1.5k		175J	Si	DO8
25	4FB40	400						Si	DO13
26	4FC40	400						Si	DO4
27	S2V40	400			60	8.3m	150	Si	
28	S10VB40	400			200	8.3m	150	Si	
29	G5G3	400		150C	1.5k		175J	Si	DO8
30	G5H3	500		150C	1.5k		175J	Si	DO8
31	G5K3	600		150C	1.5k		175J	Si	DO8
32	SSiL4040	700			4.4k	10m	150J	Si	M851
33	G5M3	700		150C	1.5k		175J	Si	DO8
34	G5N3	800		150C	1.5k		175J	Si	DO8

LOW-CURRENT RECTIFIER

LINE No.	4 TYPE NUMBER	2 PIV (V)	MAX AVG FWD DC CURRENT 1 Io MAX (A)	3 @ TEMP (°C)	MAX RATING SURGE CURR PEAK 1 Cy (A)	PULSE WIDTH (s)	MAX. TEMP (°C)	MAT	DRAWING No.
38	SSiN4240	700	1.03m	120C	9.4k	10m	180J	Si△	C247
39	BY318-100	100	3.0m	50	100	10m	150J	Si	DO27A
40	BY318-200	200	3.0m	50	100	10m	150J	Si	D027A
41	BY318-400	400	3.0m	50	100	10m	150J	Si	D027A
42	BY318-600	600	3.0m	50	100	10m	150J	Si	D027A
43	SD-60P	200	.01	40A	30	10m	140J	Si	A298a
44	KD104A	300	10m				70A	Si§	A393
45	BYT61-600	600	12m	108C	150	10m	108C	Si	DO4
46	BYT61-800	800	12m	108C	150	10m	108C	Si	DO4
47	BYT61-900	900	12m	108C	150	10m	108C	Si	DO4
48	GD107A	15	20m				60A	Ge∅	A352
49	IS426	15	20m	25A	200m	10m	70J	Si∅	A1da
50	PTC209	800	20m	25				Se	A167a
51	BA481	4.0	30m	25A			125J	Si	DO34
52	FS19	25	.03	25A	.20			Ge	DO7
53	BYT65-600	600	30m	96C	300	10m	150J	Si	DO5
54	BYT65-800	800	30m	96C	300	10m	150J	Si	DO5
55	BYT65-900	900	30m	96C	300	10m	150J	Si	DO5
56	D9B	10	40m				70A	Ge∅	A344p
57	D9D	30	40m				70A	Ge∅	A344p
58	D9G	30	40m				70A	Ge∅	A344p
59	D9I	30	40m				70A	Ge∅	A344p
60	D9K	30	40m				70A	Ge∅	A344p
61	D9V	30	40m				70A	Ge∅	A344p
62	D9E	50	40m				70A	Ge∅	A344p
63	D9L	100	40m				70A	Ge∅	A344p
64	D9SZ	100	40m				70A	Ge∅	A344p
65	SD30	30	.045	25A			150A	Si	
66	CD5	5.0	50m					Si	TO106
67	CD21	20	50m					Si	TO106
68	DA203Y	20	50m	25A	200m		125J	Si$	M1206
69	DA204Y	20	50m	25A	200m		125J	Si$	M1206a
70	P1A5	25	.05	50	30		175	Si	M343
71	IS188AM	40	50m	25A	500m	10m	70J	Si∅	A1da
72	IS188FM	40	50m	25A	500m	10m	70J	Si∅	A1da
73	CD22	50	50m					Si	TO106
74	CD32	50	50m					Si	TO106
75	1N879	50	.05	25A	.50		200S	Si	A1bz
76	P1B5	50	.05	50	30		175	Si	M343
77	P1C5	75	.05	50	30		175	Si	M343
78	CD23	100	50m					Si	TO106
79	CD33	100	50m					Si	TO106
80	1N880	100	.05	25A	.50		200S	Si	A1bz
81	P1D5	100	.05	50	30		175	Si	M343
82	CD24	150	50m					Si	TO106
83	CD34	150	50m					Si	TO106
84	D223B	150	50m				100A	Si∅	F122
85	P1E5	150	.05	50	30		175	Si	M343
86	1N881	200	.05	25A	.50		200S	Si	A1bz
87	P1F5	200	.05	50	30		175	Si	M343
88	1N882	300	.05	25A	.50		200S	Si	A1bz
89	P1G5	300	.05	50	30		175	Si	M343
90	1N883	400	.05	25A	.50		200S	Si	A1bz
91	P1H5	400	.05	50	30		175	Si	M343
92	1N884	500	.05	25A	.50		200S	Si	A1bz
93	P1K5	500	.05	50	30		175	Si	M343
94	1N885	600	.05	25A	.50		200S	Si	A1bz
95	P1M5	600	.05	50	30		175	Si	M343
96	1N886	700	.05	25A	.50		200S	Si	A1bz
97	1N887	800	.05	25A	.50		200S	Si	A1bz
98	1N888	900	.05	25A	.50		200S	Si	A1bz
99	1N93	300	75m	55A	25	8.3m		Si△	A308
100	1N315	300	.075	55A	25		85A	Ge	DO3
101	1N681	300	.075	150A	3.0	8.3m	175A	Si	DO7
102	1N683	400	.075	150A	3.0	8.3m	175A	Si	DO7
103	1N685	500	.075	150A	3.0	8.3m	175A	Si	DO7
104	1N687	600	.075	150A	3.0	8.3m	175A	Si	DO7
105	CER72A	800	.075	75A	48	4.0m	150A	Si	DO27
106	DA203X	10	100m	25A	300m	1.0	125J	Si$	M1206
107	DA204X	10	100m	25A	300m	1.0	125J	Si$	M1206a
108	CD12	12	100m					Si	TO106
109	CD26	20	100m					Si	TO106
110	CD36	20	100m					Si	TO106
111	P2A5	25	.10	50	30		175	Si	M343
112	1S456	40	.10	25A	.50		150J	Si*	DO7
113	CD27	50	100m					Si	TO106
114	CD37	50	100m					Si	TO106
115	KD103A	50	100m				100A	Si§	A391
116	KD103B	50	100m				100A	Si§	A391
117	1N868	50	.10	25A	1.0		200S	Si	A1bz
118	S200	50	.10	25$	15			Si	A54
119	P2B5	50	.10	50	30		175	Si	M343
120	BA127	60	.10	25			150J	Si*	DO7
121	1S2460	70	100m	25A	800m	1.0	175J	Si#	DO35
122	P2C5	75	.10	50	30		175	Si	M343
123	1S457	80	.10	25A	.50		150J	Si*	DO7
124	CD38	100	100m					Si	TO106
125	D206	100	100m				100A	Si*	A390
126	1N869	100	.10	25A	1.0		200S	Si	A1bz
127	10R1B	100	.10	25	60		175	Si	
128	S201	100	.10	25$	15			Si	A54
129	P2D5	100	.10	50	30		175	Si	M343
130	1N360	100	.10	100$			150C	Si	DO2
131	1S2461	120	100m	25A	800m	1.0	175J	Si#	DO35
132	CD29	150	100m					Si	TO106
133	1S458	150	100m	25A	500m		150J	Si△	DO7
134	P2E5	150	.10	50	30		175	Si	M343
135	D207	200	100m				100A	Si*	A390
136	1N870	200	.10	25A	1.0		200S	Si	A1bz
137	1S459	200	100m	25A	500m		150J	Si△	DO7
138	PS2413	200	.10	25A				Si	C15
139	S202	200	.10	25$	15			Si	A54
140	SD-60PA	200	0.1	40A	30	10m	140J	Si	A437
141	P2F5	200	.10	50	30		175	Si	M343
142	1N92	200	100m	55A	25	8.3m		Si△	A308
143	1N368	200	.10	55A			85S	Ge	DO3
144	1N361	200	.10	100$			150C	Si	DO2
145	1S2462	220	100m	25A	800m	1.0	175J	Si#	DO35
146	KD102A	250	100m				100A	Si§	A391
147	D208	300	100m				100A	Si*	A390
148	KD102B	300	100m				100A	Si§	A391
149	1N871	300	.10	25A	1.0		200S	Si	A1bz
150	S203	300	.10	25$	15			Si	A54
151	P2G5	300	.10	50	30		175	Si	M343
152	1S2463	320	100m	25A	800m		175J	Si#	DO35
153	1N362	350	.10	100$			150C	Si	DO2
154	D209	400	100m				100A	Si*	A390
155	1N872	400	.10	25A	1.0		200S	Si	A1bz
156	10R4B	400	.10	25	60		175	Si	
157	PS2414	400	.10	25A				Si	C15
158	S204	400	.10	25$	15			Si	A54
159	P2H5	400	.10	50	30		175	Si	M343
160	UF-01	400	100m	50A	8.0	10m	130J	Si	A271d
161	1S206	450	.10	25	.40	1	150	Si*	A1ce
162	D210	500	100m				100A	Si*	A390
163	1N873	500	.10	25A	1.0		200S	Si	A1bz
164	10R5B	500	.10	25	60		175	Si	
165	S205	500	.10	25$	15			Si	A54
166	P2K5	500	.10	50	30		175	Si	M343
167	1N363	500	.10	100$			150C	Si	DO2
168	D211	600	100m				100A	Si*	A390
169	1N874	600	.10	25A	1.0		200S	Si	A1bz
170	10R6B	600	.10	25	60		175	Si	
171	PS2415	600	.10	25A				Si	C15
172	S206	600	100m	25$	15			Si	A54
173	S218	600	.10	25$				Si	A54
174	P2M5	600	.10	50	30		175	Si	M343
175	1N2373	600	.10	100A	12	8.3m	150A	Si	A1fu
176	1N875	700	.10	25A	1.0		200S	Si	A1bz
177	10R7B	700	.10	25	60		175	Si	
178	1N876	800	.10	25A	1.0		200S	Si	A1bz
179	10R8B	800	.10	25	60		175	Si	
180	PS2416	800	.10	25A				Si	C15
181	S208	800	100m	25$	15			Si	A54
182	1N364	850	100m	100$	10		150C	Si	DO2
183	1N877	900	.10	25A	1.0		200S	Si	A1bz
184	10R9B	900	.10	25	60		175	Si	
185	1N1406	600	.125	75A	6.0		150	Si	A53
186	1N1407	800	.125	75A	6.0		150	Si	A53
187	1N3754	100	.13	65A	30		100A	Si△	C13
188	1N3755	200	.13	65A	30		100A	Si△	C13
189	1N3756	400	.13	65A	30		100A	Si△	C13
190	1N359	50	.15	25$			150C	Si	DO2
191	1N857	50	.15	25A	1.5		200S	Si	A1bz
192	M67A	50	.15	50	50	8.3m	175	Si	A3h
193	CER67A	50	.15	75A	48	4.0m	150A	Si	DO27
194	1N359A	50	.15	100	10		150	Si	DO2
195	A5A2	50	.15	200A	45		200A	Si	A41p
196	1N858	100	.15	25A	1.5		200S	Si	A1bz
197	PS2412	100	.15	25A				Si	C15
198	M68A	100	.15	50	50	8.3m	175	Si	A3h
199	1N91	100	150m	55A	25	8.3m		Si△	A308
200	CER68A	100	.15	75A	48	4.0m	150A	Si	DO27
201	S91	100	.15	80$	25			Si	A54
202	1N360A	100	.15	100A	10		150	Si	DO2
203	A5B2	100	.15	200A	45		200A	Si	A41p
204	1N859	200	.15	25A	1.5		200S	Si	A1bz
205	S92	200	.15	25$	25			Si	A54
206	M69A	200	.15	50	50	8.3m	175	Si	A3h
207	CER69A	200	.15	75A	48	4.0m	150A	Si	DO27
208	1N361A	200	.15	100$	10		150	Si	DO2
209	1N860	300	.15	25A	1.5		200S	Si	A1bz
210	S93	300	.15	25$	25			Si	A54
211	1N682	300	.15	150A	5.0	8.3m	175A	Si	DO7
212	A5D2	300	.15	200A	45		200A	Si	A41p
213	1N362A	350	.15	100A	10		150	Si	DO2
214	1N861	400	.15	25A	1.5		200S	Si	A1bz
215	SD61PA	400	150m	40A	30	10m	140J	Si	A437
216	SD-61P	400	0.15	40A	30	10m	140J	Si	A298a
217	SD-61PA	400	0.15	40A	30	10m	140J	Si	A437
218	M70A	400	.15	50	50	8.3m	175	Si	A3h
219	CER70A	400	.15	75A	48	4.0m	150A	Si	DO27
220	1N684	400	.15	150A	5.0	8.3m	175A	Si	DO7

SYMBOLS AND CODES EXPLAINED IN INTERPRETER

5. GENERAL-PURPOSE RECTIFIERS - Low Current (Cont'd)

IN ORDER OF: (1) IO MAX (2) PIV (3) ° TEMP & (4) TYPE NMBER

LINE No.	4 TYPE NUMBER	2 PIV (V)	MAX AVG FWD DC CURRENT 1 Io MAX (A)	3 @ TEMP (°C)	MAX RATING SURGE CURR PEAK 1 Cy (A)	PULSE WIDTH (s)	MAX. TEMP (°C)	MAT	DRAWING No.
1	1N862	500	.15	25A	1.5		200S	Si	A1bz
2	M500A	500	.15	50	50	8.3m	175	Si	A3h
3	CER500A	500	.15	75A	48	4.0m	150A	Si	DO27
4	1N363A	500	.15	100A	10		150	Si	DO2
5	1N686	500	.15	150A	5.0	8.3m	175A	Si	DO7
6	A5F2	500	.15	200A	45		200A	Si	A41p
7	1N863	600	.15	25A	1.5		200S	Si	A1bz
8	1S2313	600	150m	25A	10		125J	Si	
9	M71A	600	.15	50	50	8.3m	175	Si	A3h
10	1N596	600	.15	55A	4.0	1.0m	150A	Si	A31x
11	CER71A	600	.15	75A	48	4.0m	150A	Si	DO27
12	1N689	600	.15	150A	5.0	8.3m	175A	Si	DO7
13	1N864	700	.15	25A	1.5		200S	Si	A1bz
14	1N865	800	.15	25A	1.5		200S	Si	A1bz
15	1N2501	800	.15	25A			150A	Si	A6
16	1S2314	800	150m	25A	10		125J	Si	
17	M72A	800	.15	50	50	8.3m	175	Si	A3h
18	1N597	800	.15	55A	4.0	1.0m	150A	Si	A31x
19	CER72B	800	.15	75A	48	4.0m	150A	Si	DO27
20	1N364A	850	.15	100A	10		150	Si	DO2
21	1N866	900	.15	25A	1.5		200S	Si	A1bz
$I_O \geq 200$ mA									
25	SR201	10	200m	25J			25A	Ge	T05
26	SR202	20	200m	25J			25A	Ge	T05
27	P3A5	25	.20	50	30		175	Si	M343
28	688-25	25	.20	100C	20	8.3m	150J	Si	M101w
29	SR203	30	200m	25J			25A	Ge	T05
30	SR204	40	200m	25J			25A	Ge	T05
31	1N846	50	.20	25A	2.0		200S	Si	A1bz
32	1S120	50	.20	25A	1.0	1	150A	Si△	A1
33	A1A1	50	.20	25	60		175A	Si	A41q
34	A1A5	50	.20	25	60		175A	Si	A41q
35	A1A9	50	.20	25	60		175A	Si	A41q
36	B1A1	50	.20	25	60		175A	Si	A1rx
37	B1A5	50	.20	25	60		175A	Si	A1rx
38	B1A9	50	.20	25	60		175A	Si	A1rx
39	PDR50	50	200m	25	15	10m	125J	Si	DO15
40	PS2411	50	.20	25A				Si	C15
41	K1A5	50	.20	50	60		150C	Si	
42	P3B5	50	.20	50	30		175	Si	M343
43	1N2013	50	.20	150A			175A	Si	DO12
44	1N3072	50	200m	150C	10	8.3m	175C	Si	DO12
45	P3C5	75	.20	50	30		175	Si	M343
46	DR50	80	200m		15	10m	125J	Si	A283f
47	1N676	100	.20	25A	3.0	1	175A	Si	DO7
48	1N847	100	.20	25A	2.0		200S	Si	A1bz
49	A1B1	100	.20	25	60		175A	Si	A41q
50	A1B5	100	.20	25	60		175A	Si	A41q
51	A1B9	100	.20	25	60		175A	Si	A41q
52	B1B1	100	.20	25	60		175A	Si	A1rx
53	B1B5	100	200m	25	60		175A	Si	A41q
54	B1B9	100	.20	25	60		175A	Si	A1rx
55	K1B5	100	.20	50	60		150C	Si	
56	P3D5	100	.20	50	30		175	Si	M343
57	1N340	100	.20	150C	5.0		175B	Si	DO4
58	1N349	100	.20	150C	5.0		175B	Si	DO4
59	1N2014	100	.20	150A			175A	Si	DO12
60	1N3073	100	200m	150C	10	8.3m	175C	Si	DO12
61	1N3952	130 *	.20	25A			200S	Si	DO7
62	1S121	150	.20	25A	1.0	1	150A	Si△	A1
63	MA181	150	200m	25A	1.0	1.0	175A	Si	A24D
64	P3E5	150	.20	50	30		175	Si	M343
65	1N2015	150	.20	150A			175A	Si	DO12
66	1N3074	150	200m	150C	10	8.3m	175C	Si	DO12
67	1N678	200	.20	25A	3.0	1	175A	Si	DO7
68	1N848	200	.20	25A	2.0		200S	Si	A1bz
69	A1C1	200	.20	25	60		175A	Si	A41q
70	A1C5	200	.20	25	60		175A	Si	A41q
71	A1C9	200	.20	25	60		175A	Si	A41q
72	B1C1	200	.20	25	60		175A	Si	A1rx
73	B1C5	200	.20	25	60		175A	Si	A1rx
74	B1C9	200	.20	25	60		175A	Si	A1rx
75	MA182	200	200m	25A	1.0	1.0	175A	Si	A24D
76	K1C5	200	.20	50	60		150C	Si	
77	P3F5	200	.20	50	30		175	Si	M343
78	1N337	200	.20	150C	5.0		175B	Si	DO4
79	1N346	200	.20	150C	5.0		175B	Si	DO4
80	1N2016	200	.20	150A			175A	Si	DO12
81	1N3075	200	200m	150C	10	8.3m	175C	Si	DO12
82	MA183	250	200m	25A	1.0	1.0	175A	Si	A24D
83	MC025	250	.20	25A	1.0		200J	Si△	A2a
84	1N2017	250	.20	150A			175A	Si	DO12
85	1N3076	250	200m	150C	10	8.3m	175C	Si	DO12
86	1N849	300	.20	25A	2.0		200S	Si	A1bz
87	A1D1	300	.20	25	60		175A	Si	A41q
88	A1D5	300	.20	25	60		175A	Si	A41q
89	A1D9	300	.20	25	60		175A	Si	A41q
90	B1D1	300	.20	25	60		175A	Si	A1rx
91	B1D5	300	.20	25	60		175A	Si	A1rx
92	B1D9	300	.20	25	60		175A	Si	A1rx
93	MA291	300	200m	25C	6.0		125J	Si	M990
94	K1D5	300	.20	50	60		150C	Si	
95	P3G5	300	.20	50	30		175	Si	M343
96	1N335	300	.20	150C	5.0		175B	Si	DO4
97	1N344	300	.20	150C	5.0		175B	Si	DO4
98	1N2018	300	.20	150A			175A	Si	DO12
99	1N3077	300	200m	150C	10	8.3m	175C	Si	DO12
100	1N2019	350	.20	150A			175A	Si	DO12
101	1N3078	350	200m	150C	10	8.3m	175C	Si	DO12
102	1N850	400	.20	25A	2.0		200S	Si	A1bz
103	A1E1	400	.20	25	60		175A	Si	A41q
104	A1E5	400	.20	25	60		175A	Si	A41q
105	A1E9	400	.20	25	60		175A	Si	A41q
106	B1E1	400	.20	25	60		175A	Si	A1rx
107	B1E5	400	.20	25	60		175A	Si	A1rx
108	B1E9	400	.20	25	60		175A	Si	A1rx
109	K1E5	400	.20	50	60		150C	Si	
110	P3H5	400	.20	50	30		175	Si	M343
111	S103	400	.20	70$	15			Si	A54
112	1N333	400	.20	150C	5.0		175B	Si	DO4
113	1N342	400	.20	150C	5.0		175B	Si	DO4
114	1N2020	400	.20	150A			175A	Si	DO12
115	1N3079	400	200m	150C	10	8.3m	175C	Si	DO12
116	1N851	500	.20	25A	2.0		200S	Si	A1bz
117	A1F1	500	.20	25	60		175A	Si	A41q
118	A1F5	500	.20	25	60		175A	Si	A41q
119	A1F9	500	.20	25	60		175A	Si	A41q
120	B1F1	500	.20	25	60		175A	Si	A1rx
121	B1F5	500	.20	25	60		175A	Si	A1rx
122	B1F9	500	.20	25	60		175A	Si	A1rx
123	K1F5	500	.20	50	60		150C	Si	
124	P3K5	500	.20	50	30		175	Si	M343
125	S107	500	.20	100$	15			Si	A54
126	1N3080	500	200m	150C	10	8.3m	175C	Si	DO12
127	1N256	570	.20	135C	1.0		150C	Si	S11a
128	1N852	600	.20	25A	2.0		200S	Si	A1bz
129	A1G1	600	.20	25	60		175A	Si	A41q
130	A1G5	600	.20	25	60		175A	Si	A41q
131	A1G9	600	.20	25	60		175A	Si	A41q
132	B1G1	600	.20	25	60		175A	Si	A1rx
133	B1G5	600	.20	25	60		175A	Si	A1rx
134	B1G9	600	.20	25	60		175A	Si	A1rx
135	K1G5	600	.20	50	60		150C	Si	
136	P3M5	600	.20	50	30		175	Si	M343
137	1N3081	600	200m	150C	10	8.3m	175C	Si	DO12
138	DR450	650	200m		15	10m	125J	Si	A283f
139	1N853	700	.20	25A	2.0		200S	Si	A1bz
140	A1H1	700	.20	25	60		175A	Si	A41q
141	A1H5	700	.20	25	60		175A	Si	A41q
142	A1H9	700	.20	25	60		175A	Si	A41q
143	B1H1	700	.20	25	60		175A	Si	A1rx
144	B1H5	700	.20	25	60		175A	Si	A1rx
145	B1H9	700	.20	25	60		175A	Si	A1rx
146	dc25Z6	700	200m	35A	50		125A	Si	M1195a
147	K1H5	700	.20	50	60		150C	Si	
148	1N854	800	.20	25A	2.0		200S	Si	A1bz
149	A1K1	800	.20	25	60		175A	Si	A41q
150	A1K5	800	.20	25	60		175A	Si	A41q
151	A1K9	800	.20	25	60		175A	Si	A41q
152	B1K1	800	.20	25	60		175A	Si	A1rx
153	B1K5	800	.20	25	60		175A	Si	A1rx
154	B1K9	800	.20	25	60		175A	Si	A1rx
155	K1K5	800	.20	50	60		150C	Si	
156	1N855	900	.20	25A	2.0		200S	Si	A1bz
157	PDR25	25	250m	25			125J	Si	DO15
158	M67B	50	.25	50	50	8.3m	175	Si	A3h
159	CER67B	50	.25	75A	48	4.0m	150A	Si	DO27
160	1N316	50	.25	100$			200	Si	DO2
161	1N316A	50	.25	100$	10		200	Si	DO2
162	CODI551	100	.25	25$	20		100	Si	A52g
163	M68B	100	.25	50	50	8.3m	175	Si	A3h
164	CER68B	100	.25	75A	48	4.0m	150A	Si	DO27
165	1N317	100	.25	100$			200	Si	DO2
166	1N317A	100	.25	100$	10		200	Si	DO2
167	CODI552	200	.25	25$	20		100	Si	A52g
168	S217	200	.25	25$				Si	A54
169	M69B	200	.25	50	50	8.3m	175	Si	A3h
170	CER69B	200	.25	75A	48	4.0m	150A	Si	DO27
171	1N318	200	.25	100$			200	Si	DO2
172	1N318A	200	.25	100$	10		200	Si	DO2
173	CODI553	300	.25	25$	20		100	Si	A52g
174	1N319A	350	.25	100$	10		200	Si	DO2
175	1N319	350	.25	150$			200	Si	DO2
176	CODI554	400	.25	25$	20		100	Si	A52g
177	S219	400	.25	25$	15			Si	A54
178	M70B	400	.25	50	50	8.3m	175	Si	A3h
179	RU1	400	250m	50	15	10m	130	Si△	A344h
180	CER70B	400	.25	75A	48	4.0m	150A	Si	DO27
181	CODI555	500	.25	25$	20		100	Si	A52g
182	M500B	500	.25	50	50	8.3m	175	Si	A3h
183	CER500B	500	.25	75A	48	4.0m	150A	Si	DO27
184	1N320	500	.25	100$			200	Si	DO2
185	1N320A	500	.25	100$	10		200	Si	DO2
186	CODI556	600	.25	25$	20		100	Si	A52g
187	67D006H53PNN	600	250m	50A	35		150A	Si	A1yu
188	M71B	600	.25	50	50	8.3m	175	Si	A3h
189	RU1A	600	250m	50	15	10m	130	Si△	A344i
190	CER71B	600	.25	75A	48	4.0m	150A	Si	DO27
191	1N2878	700	250m	25A			150S	Si	M122a
192	1N2879	700	250m	25A			150S	Si	A83w
193	M72B	800	.25	50	50	8.3m	175	Si	A3h
194	RU1B	800	250m	50	15	10m	130	Si△	A344i
195	7D8	800	250m	65A	3.0	8.3m	150A	Si	DO7
196	CER72C	800	.25	75A	48	4.0m	150A	Si	DO27
197	1N560	800	.25	100A	1.0		140A	Si	DO3
198	1N321	850	250m	100$	10		200	Si	DO2
199	1N321A	850	250m	100$	10		200	Si	DO2
200	1N1260	900	.25	25A	15		165A	Si	A53
201	1N1259	800	.27	25A	15		165A	Si	A53
202	1N1258	700	.28	25A	15		165A	Si	A53
203	688-20	20	.30	100C	20	8.3m	150J	Si	M101w
204	P4A5	25	.30	50	30		175	Si	M343
205	1N1701	50	.30	50A	8.0		125A	Si	A53
206	P4B5	50	.30	50	30		175	Si	M343
207	1N599	50	.30	100A	2.0	100m	170S	Si	DO1
208	1N599A	50	.30	100A	2.0	100m	170S	Si	DO1
209	P4C5	75	.30	50	30		175	Si	M343
210	D226D	100	300m				80A	Si*	A390
211	1N530	100	.30	25A	3.0	3.0m	150A	Si	DO3
212	1N1702	100	.30	50A	8.0		125A	Si	A53
213	P4D5	100	.30	50	30		175	Si	M343
214	1N440	100	.30	100A	15		165A	Si	DO2
215	1N600	100	.30	100A	2.0	100m	170S	Si	DO1
216	1N600A	100	.30	100A	2.0	100m	170S	Si	DO1
217	P4E5	150	.30	50	30		175	Si	M343
218	1N601	150	.30	100A	2.0	100m	170S	Si	DO1
219	1N601A	150	.30	100A	2.0	100m	170S	Si	DO1
220	D226G	200	300m				80A	Si*	A390

SYMBOLS AND CODES EXPLAINED IN INTERPRETER

5. GENERAL-PURPOSE RECTIFIERS - $I_0 \geq 200$ mA (Cont'd)

IN ORDER OF: (1) IO MAX (2) PIV (3) ° TEMP & (4) TYPE NMBER

LINE No.	4 TYPE NUMBER	2 PIV (V)	MAX AVG FWD DC CURRENT 1 Io MAX (A)	3 @ TEMP (°C)	MAX RATING SURGE CURR PEAK 1 Cy (A)	PULSE WIDTH (s)	MAX. TEMP (°C)	MAT	DRAWING No.
1	1N531	200	.30	25A	3.0	3.0m	150A	Si	DO3
2	1N1703	200	.30	50A	8.0		125A	Si	A53
3	P4F5	200	.30	50	30		175	Si	M343
4	1N441	200	.30	100A	15		165A	Si	DO2
5	1N602	200	.30	100A	2.0	100m	170S	Si	DO1
6	1N602A	200	.30	100A	2.0	100m	170S	Si	DO1
7	D226V	300	300m				80A	Si*	A390
8	1N532	300	.30	25A	3.0	3.0m	150A	Si	DO3
9	1N1704	300	.30	50A	8.0		125A	Si	A53
10	P4G5	300	.30	50	30		175	Si	M343
11	1N442	300	.30	100A	15		165A	Si	DO2
12	1N603	300	.30	100A	2.0	100m	170S	Si	DO1
13	1N603A	300	.30	100A	2.0	100m	170S	Si	DO1
14	1N2115	365	.30 Ø	50A	10		100A	Si△	M21
15	D226B	400	300m				80A	Si*	A390
16	1N533	400	.30	25A	3.0	3.0m	150A	Si	DO3
17	1N1705	400	.30	50A	8.0		125A	Si	A53
18	P4H5	400	.30	50	30		175	Si	M343
19	1N443	400	.30	100A	15		165A	Si	DO2
20	1N604	400	.30	100A	2.0	100m	170S	Si	DO1
21	1N604A	400	.30	100A	2.0	100m	170S	Si	DO1
22	S106	400	.30	100$	15			Si	A54
23	KD205E	500	300m				85A	Si△	M945
24	1N534	500	.30	25A	3.0	3.0m	150A	Si	DO3
25	1N1706	500	.30	50A	8.0		125A	Si	A53
26	P4K5	500	.30	50	30		175	Si	M343
27	1N444	500	.30	100A	15		150A	Si	DO2
28	1N605	500	.30	100A	2.0	100m	170S	Si	DO1
29	1N605A	500	.30	100A	2.0	100m	170S	Si	DO1
30	1N535	600	.30	25A	3.0	3.0m	150A	Si	DO3
31	1N1257	600	.30	25A	15		165A	Si	A53
32	1S2310	600	300m	25A	30		125J	Si	
33	P4M5	600	.30	50	30		175	Si	M343
34	1N445	600	.30	100A	15		150A	Si	DO2
35	1N606	600	.30	100A	2.0	100m	170S	Si	DO1
36	1N606A	600	.30	100A	2.0	100m	170S	Si	DO1
37	1N2505	800	.30	25A			150A	Si	A6
38	1S2311	800	300m	25A	30		125J	Si	
39	1N548	900	300m	25$			150	Si	A189
40	1N1256	500	.32	25A	15		165A	Si	A53
41	688-18	18	.35	100C	20	8.3m	150J	Si	M101w
42	S79	25	.35	25$	15			Si	A54
43	HV2PA	200	350m	100A			150A	Si	A94q
44	HV4PA	400	350m	100A			150A	Si	A94q
45	HV6PA	600	350m	100A			150A	Si	A94q
46	HV8PA	800	350m	100A			150A	Si	A94q
47	BYX10	800	360m	40A	15	10m	150J	Si	A171j
48	1N5218	800	.375	40A	50 §		175A	Si	A31r
49	688-15	15	.40	100C	20	8.3m	150J	Si	M101w
50	P5A5	25	.40	50	30		175	Si	M343
51	S73	30	.40	80$	15			Si	A54
52	CP22	40	400m					Si	TO105
53	KD204V	50	400m				85A	Si△	S476
54	K2A5	50	.40	50	60		150C	Si	
55	P5B5	50	.40	50	30		175	Si	M343
56	1N323	50	.40	100$	15		200	Si	DO2
57	1N323A	50	.40	100$	10		200	Si	DO2
58	P5C5	75	.40	50	30		175	Si	M343
59	D229V	100	400m				85A	Si△	S476
60	1N677	100	.40	25A	5.0	1	175A	Si	DO7
61	K2B5	100	.40	50	60		150C	Si	
62	P5D5	100	.40	50	30		175	Si	M343
63	1N324	100	.40	100$			200	Si	DO2
64	1N324A	100	.40	100$	10		200	Si	DO2
65	1N339	100	.40	150C	10		175B	Si	DO4
66	1N348	100	.40	150C	10		175B	Si	DO4
67	P5E5	150	.40	50	30		175	Si	M343
68	1N254	190	.40	135C	1.5		150A	Si	S11a
69	D229G	200	400m				85A	Si△	S476
70	1N679	200	.40	25A	5.0	1	175A	Si	DO7
71	K2C5	200	.40	50	60		150C	Si	
72	P5F5	200	.40	50	30		175	Si	M343
73	1N325	200	.40	100$			200	Si	DO2
74	1N325A	200	.40	100$	10		200	Si	DO2
75	1N336	200	.40	150C	10		175B	Si	DO4
76	1N345	200	.40	150C	10		175B	Si	DO4
77	1S111	225	.40	25A	8.0		150A	Si△	A1
78	D229D	300	400m				85A	Si△	S476
79	KD229D	300	400m				85A	Si△	S476
80	1N646	300	.40	25A	3.0	15m	150A	Si△	A1
81	K2D5	300	.40	50	60		150C	Si	
82	P5G5	300	.40	50	30		175	Si	M343
83	1N334	300	.40	150C	10		175B	Si	DO4
84	1N343	300	.40	150C	10		175B	Si	DO4
85	1N673	350	400m	25A	3.0	1.0	150A	Si△	A87
86	1N326	350	.40	100$			200	Si	DO2
87	1N326A	350	.40	100$	10		200	Si	DO2
88	1N255	380	.40	135C	1.5		150A	Si	S11a
89	D229E	400	400m				85A	Si△	S476
90	KD229E	400	400m				85A	Si△	S476
91	1N647	400	.40	25A	3.0	15m	150A	Si△	A1
92	1S113	400	.40	25A	8.0		150A	Si△	A1
93	K2E5	400	.40	50	60		150C	Si	
94	P5H5	400	.40	50	30		175	Si	M343
95	S104	400	.40	70$	15			Si	A54
96	S102	400	.40	100$	15			Si	A54
97	1N332	400	.40	150C	10		175B	Si	DO4
98	1N341	400	.40	150C	10		175B	Si	DO4
99	1N648	500	.40	25A	3.0	15m	150A	Si△	A1
100	K2F5	500	.40	50	60		150C	Si	
101	P5K5	500	.40	50	30		175	Si	M343
102	1N327	500	.40	100$			200	Si	DO2
103	1N327A	500	.40	100$	10		200	Si	DO2
104	1N649	600	.40	25A	3.0	15m	150A	S△	A1
105	1N947	600	.40	25A	3.0		200	Si	A87
106	1S115	600	.40	25A	8.0		150A	Si△	A1
107	1P649	600	400m	45A	15	10m	150J	Si△	A1bg
108	K2G5	600	.40	50	60		150C	Si	
109	P5M5	600	.40	50	30		175	Si	M343
110	K2H5	700	.40	50	60		150C	Si	
111	1S117	800	.40	25A	8.0		150A	Si△	A1
112	K2K5	800	.40	50	60		150C	Si	
113	1N562	800	.40	100A	2.0		140A	Si	DO4
114	V30J	800	400m	100L	30	10m	150J	Si	A313d
115	1N328	850	400m	100$	10		150C	Si	DO2
116	1N328A	850	400m	100$	10		150C	Si	DO2
117	1N1108	800	.45	100	27	4.0m	150	Si	F22a
118	A2A4	50	.475	25	40	8.3m	175	Si	A41p
119	A2B4	100	.475	25	40	8.3m	175	Si	A41p
120	A2C4	200	.475	25	40	8.3m	175	Si	A41p
121	A2D4	300	.475	25	40	8.3m	175	Si	A41p
122	A2E4	400	.475	25	40	8.3m	175	Si	A41p
123	A2F4	500	.475	25	40	8.3m	175	Si	A41p
124	A2G4	600	.475	25	40	8.3m	175	Si	A41p
125	A2H4	700	.475	25A	25		175A	Si	A41p
126	A2K4	800	.475	25A	25		175A	Si	A41p

$I_0 \geq 500$ mA

LINE No.	4 TYPE NUMBER	2 PIV (V)	MAX AVG FWD DC CURRENT 1 Io MAX (A)	3 @ TEMP (°C)	MAX RATING SURGE CURR PEAK 1 Cy (A)	PULSE WIDTH (s)	MAX. TEMP (°C)	MAT	DRAWING No.
130	688-12	12	.50	100C	20	8.3m	150J	Si	M101w
131	SCHJ15K	15	0.5	55A	25		150	Si	A138d
132	P6A5	25	.50	50	30		175	Si	M343
133	05SM05	50	500m		40			Si	A3ah
134	1N1251	50	.50	25A	15		165A	Si	A53
135	1N2080	50	.50	25$	15		150A	Si	A53
136	MT021	50	.50	25A	10		175A	Si	A60e
137	MT021A	50	.50	25A	10		175A	Si	A60e
138	M67C	50	.50	50	50	8.3m	175	Si	A3h
139	P6B5	50	.50	50	30		175	Si	M343
140	1N1707	50	.50	55A	10		125A	Si	A53
141	CER67C	50	.50	75A	48	4.0m	150A	Si	DO27
142	1N1028	50	.50	100A	30 §	4.0m	150A	Si	A73b
143	S220	50	.50	100$	15			Si	A54
144	P6C5	75	.50	50	30		175	Si	M343
145	KD205D	100	500m				85A	Si△	M945
146	1N1252	100	.50	25A	15		165A	Si	A53
147	1N2081	100	.50	25$	15		150A	Si	A53
148	MT022	100	.50	25A	10		175A	Si	A60p
149	MT022A	100	.50	25A	10		175A	Si	A60e
150	UT221	100	.50	25A	10		175A	Si	A146f
151	1N3227	100	500m	50A	12		175S	Si	A1cs
152	DFA05B	100	.50	50	30		125J	Si△	A249f
153	DFD05B	100	500m	50A	30		125J	Si△	A1abe
154	M68C	100	.50	50	50	8.3m	175	Si	A3h
155	P6D5	100	.50	50	30		175	Si	M343
156	1N1708	100	.50	55A	10		125A	Si	A53
157	DS18	100	500m	60	30	10m	120	Si△	M594c
158	DS19	100	500m	60	30	10m	120	Si△	M594c
159	1S1941	100	500m	65A	35		125J	Si	A1bs
160	DFB05B	100	.50	65	10		125J	Si△	A298r
161	CER68C	100	.50	75A	48	4.0m	150A	Si	DO27
162	1T501	100	.50 Ø	85A	35		100A	Si	A3x
163	1N550	100	.50	100A	4.0	3.0m	150A	Si	DO4
164	1N1029	100	.50	100A	30 §	4.0m	150A	Si	A73b
165	1N1081	100	500m	100A	30 §	4.0m	150A	Si	F22
166	S221	100	.50	100$	15			Si	A54
167	MT023	150	.50	25A	10		175A	Si	A60e
168	MT023A	150	.50	25A	10		175A	Si	A60e
169	P6E5	150	.50	50	30		175	Si	M343
170	1N1030	150	.50	100A	30 §	4.0m	150A	Si	A73b
171	KD205G	200	500m				85A	Si△	M945
172	1N1253	200	.50	25A	15		165A	Si	A53
173	1N2082	200	.50	25$	15		150A	Si	A53
174	MT020A	200	.50	25A	10		175A	Si	A60e
175	1N5215	200	.50	40A	50 §		175A	Si	A31r
176	1N3228	200	500m	50A	12		175S	Si	A1cs
177	DFA05C	200	.50	50	30		125J	Si△	A249f
178	DFD05C	200	500m	50A	30		125J	Si△	A1abe
179	M69C	200	.50	50	50	8.3m	175	Si	A3h
180	P6F5	200	.50	50	30		175	Si	M343
181	1N1709	200	.50	55A	10		125A	Si	A53
182	1S1942	200	500m	65A	35		125J	Si	A1bs
183	DFB05C	200	.50	65	10		125J	Si△	A298r
184	1N3748	200	.50	75A	20	8.0m	150A	Si	A1cm
185	CER69C	200	.50	75A	48	4.0m	150A	Si	DO27
186	1T502	200	.50 Ø	85A	35		100A	Si	A3x
187	1N551	200	.50	100A	4.0	3.0m	150A	Si	DO4
188	1N1031	200	.50	100A	30 §	4.0m	150A	Si	A73b
189	1N1082	200	.50	100A	30 §	4.0m	150A	Si	F22
190	MP066	200	500m	100A	22		175	Si	DO41
191	MP066A	200	500m	100A	22		175	Si	DO41
192	S101	200	.50	100$	15			Si	A54
193	1N3082	200	500m	150A	15	8.3m	200A	Si	A19b
194	MT020	225	.50	25A	10		175A	Si	A60e
195	KD205V	300	500m				85A	Si△	M945
196	SDR3007	300	0.5		75			Si#	DO4
197	1N1254	300	.50	25A	15		165A	Si	A53
198	1N2083	300	.50	25$	15		150A	Si	A53
199	MT030	300	.50	25A	10		175A	Si	A60e
200	MT030A	300	.50	25A	10		175A	Si	A60e
201	P6G5	300	.50	50	30		175	Si	M343
202	1N1710	300	.50	55A	10		125A	Si	A53
203	1N552	300	.50	100A	4.0	3.0m	150A	Si	DO4
204	1N1032	300	.50	100A	30 §	4.0m	150A	Si	A73b
205	1N1083	300	.50	100A	30 §	4.0m	150A	Si	F22
206	1N3183	350	.50	25A	4.0	1	150A	Si	M82
207	KD205B	400	500m				85A	Si△	M945
208	SDR3008	400	0.5		75			Si#	DO4
209	1N1255	400	.50	25A	15		165A	Si	A53
210	1N1255A	400	.50	25A	5.0		175A	Si	A82d
211	1N2084	400	.50	25$	15		150A	Si	A53
212	MT040	400	.50	25A	10		175A	Si	A60e
213	MT040A	400	.50	25A	10		175A	Si	A60e
214	1N5216	400	.50	40A	50 §		175A	Si	A31r
215	1N3229	400	500m	50A	12		175S	Si	A1cs
216	DFA05E	400	.50	50	30		125J	Si△	A249f
217	DFD05E	400	500m	50A	30		125J	Si△	A1abe
218	M70C	400	.50	50	50	8.3m	175	Si	A3h
219	P6H5	400	.50	50	30		175	Si	M343
220	1N1711	400	.50	55A	10		125A	Si	A53

SYMBOLS AND CODES EXPLAINED IN INTERPRETER

5. GENERAL-PURPOSE RECTIFIERS - $I_0 \geq 500$ mA (Cont'd)

IN ORDER OF: (1) IO MAX (2) PIV (3) ° TEMP & (4) TYPE NMBER

LINE No.	4 TYPE NUMBER	2 PIV (V)	MAX AVG FWD DC CURRENT 1 Io MAX (A)	3 @ TEMP (°C)	MAX RATING SURGE CURR PEAK 1 Cy (A)	PULSE WIDTH (s)	MAX. TEMP (°C)	MAT	DRAWING No.
1	1S1943	400	500m	65A	35		125J	Si	A1bs
2	DFB05E	400	.50	65	10		125J	Si△	A298r
3	1N1763	400	.50	75A	35		100A	Si△	A53
4	1N3749	400	.50	75A	20	8.0m	150A	Si	A1cm
5	CER70C	400	.50	75A	48	4.0m	150A	Si	DO27
6	1T504	400	.50 Ø	85A	35		100A	Si	A3x
7	1N553	400	.50	100A	4.0	3.0m	150A	Si	DO4
8	1N1033	400	.50	100A	30 §	4.0m	150A	Si	A73b
9	1N1084	400	.50	100A	30 §	4.0m	150A	Si	F22
10	1N1169A	400	.50	100$	20		150	Si	DO2
11	CP100	400	.50	100				Si	M84ac
12	CP101	400	.50	100				Si	M84ad
13	MP067	400	500m	100A	22		175	Si	DO41
14	MP067A	400	500m	100A	22		175	Si	DO41
15	S100	400	.50	100$	15			Si	A54
16	S105	400	.50	100$	15			Si	A54
17	S108	400	.50	100$	15			Si	A54
18	1N3083	400	500m	150A	15	8.3m	200A	Si	A19b
19	SDR3009	450	0.5		75			Si#	DO4
20	KD205A	500	500m				85A	Si△	M945
21	1N2085	500	500m	25$	15		150A	Si	A53
22	1N3184	500	.50	25A	4.0	1	150A	Si	M82
23	MT050	500	.50	25A	10		175A	Si	A60e
24	MT050A	500	.50	25A	10		175A	Si	A60e
25	M500C	500	.50	50	50	8.3m	175	Si	A3h
26	P6K5	500	.50	50	30		175	Si	M343
27	1N1712	500	.50	55A	10		125A	Si	A53
28	1N1764	500	.50	75A	35		100A	Si△	A53
29	CER500C	500	.50	75A	48	4.0m	150A	Si	DO27
30	1T505	500	.50 Ø	85A	35		100A	Si	A3x
31	1N554	500	.50	100A	4.0	3.0m	150A	Si	DO4
32	50M	500	.50	100A	30	4.0m	150	Si	F22
33	1N2086	600	.50	25$	15		150A	Si	A53
34	MT060	600	.50	25A	10		175A	Si	A60e
35	MT060A	600	.50	25A	10		175A	Si	A60e
36	1N5217	600	.50	40A	50 §		175A	Si	A31r
37	1N3230	600	500m	50A	12		175S	Si	A1cs
38	DFA05G	600	.50	50	30		125J	Si△	A249f
39	DFD05G	600	500m	50A	30		125J	Si△	A1abe
40	M71C	600	.50	50	50	8.3m	175	Si	A3h
41	P6M5	600	.50	50	30		175	Si	M343
42	1S1944	600	500m	65A	35		125J	Si	A1bs
43	DFB05G	600	.50	65	10		125J	Si△	A298r
44	1N3750	600	.50	75A	20	8.0m	150A	Si	A1cm
45	CER71C	600	.50	75A	48	4.0m	150A	Si	DO27
46	1N555	600	.50	100A	4.0	3.0m	150A	Si	DO4
47	60M	600	.50	100A	30	4.0m	150	Si	F22
48	MP068	600	500m	100A	22		175	Si	DO41
49	MP068A	600	500m	100A	22		175	Si	DO41
50	1N3084	600	500m	150A	15	8.3m	200A	Si	A19b
51	1N3185	700	.50	25A	4.0	1	150A	Si	M82a
52	MT070	700	500m	25A	10		175A	Si	A60e
53	MT070A	700	500m	25A	10		175A	Si	A60e
54	CP102	700	.50	100				Si	M84ae
55	SI7A	700	500m	150	80	10m		Si	A1bc
56	KD209V	800	500m				85A	Si△	A355
57	MT080	800	.50	25A	10		175A	Si	A60e
58	MT080A	800	.50	25A	10		175A	Si	A60e
59	S63	800	500m	25$	15			Si	A54
60	1N3231	800	500m	50A	12		175S	Si	A1cs
61	DFC05J	800	.50	50	20		125J	Si△	A298r
62	M72C	800	.50	50	50	8.3m	175	Si	A3h
63	1N3196	800	.50	75A			100A	Si	A50
64	1N3256	800	500m	75A	40		100A	Si	A50a
65	1N3642	800	500m	75A	40	8.3m	100A	Si	DO13
66	1N3751	800	.50	75A	20	8.0m	150A	Si	A1cm
67	CER72D	800	.50	75A	48	4.0m	150A	Si	DO27
68	M72D	800	.50	75A	11	1	150A	Si	A3j
69	MT090	900	.50	25A	10		175A	Si	A60e
70	MT090A	900	.50	25A	10		175A	Si	A60e
71	1T509	900	.50 Ø	85A	35		100A	Si	A3x
72	1N4361	900	.50	100A	20		125	Si	A3c
73	S95	500	.55	50$	15			Si	A54
74	FR067	1.0	0.6	25A	50	8.0m	175S	Si	D041
75	688-10	10	.60	100C	20	8.3m	150J	Si	M101w
76	P7A5	25	.60	50	30		175	Si	M343
77	A2A1	50	.60	25	60		175A	Si	A41q
78	A2A5	50	.60	25	60		175A	Si	A41q
79	A2A9	50	.60	25	60		175A	Si	A41q
80	B2A1	50	.60	25	60		175A	Si	A1rx
81	B2A5	50	.60	25	60		175A	Si	A1rx
82	B2A9	50	.60	25	60		175A	Si	A1rx
83	FR061	50	0.6	25A	50	8.0m	175S	Si	D041
84	S77	50	.60	25$	15			Si	A54
85	FR061L	50	600m	50A	50		175A	Si	DO15
86	K3A5	50	.60	50	60		150C	Si	
87	P7B5	50	.60	50	30		175	Si	M343
88	RL061	50	600m	50A	50		175A	Si	DO41
89	P7C5	75	.60	50	30		175	Si	M343
90	1N3544	100	.60	25A	15		200A	Si	A1
91	A2B1	100	.60	25	60		175A	Si	A41q
92	A2B5	100	.60	25	60		175A	Si	A41q
93	A2B9	100	.60	25	60		175A	Si	A41q
94	B2B1	100	.60	25	60		175A	Si	A1rx
95	B2B5	100	.60	25	60		175A	Si	A1rx
96	B2B9	100	.60	25	60		175A	Si	A1rx
97	FR062	100	0.6	25A	50	8.0m	175S	Si	D041
98	1N1692	100	.60	50A	20		115A	Si	DO3
99	FR062L	100	600m	50A	50		175A	Si	DO15
100	K3B5	100	.60	50	60		150C	Si	
101	P7D5	100	.60	50	30		175	Si	M343
102	RL062	100	600m	50A	50		175A	Si	DO41
103	P7E5	150	.60	50	30		175	Si	M343
104	KD204B	200	600m				85A	Si△	S476
105	1N3545	200	.60	25A	15		200A	Si	A1
106	A2C1	200	.60	25	60		175A	Si	A41q
107	A2C5	200	.60	25	60		175A	Si	A41q
108	A2C9	200	.60	25	60		175A	Si	A41q
109	B2C1	200	.60	25	60		175A	Si	A1rx
110	B2C5	200	.60	25	60		175A	Si	A1rx
111	B2C9	200	.60	25	60		175A	Si	A1rx
112	FR063	200	0.6	25A	50	8.0m	175S	Si	D041
113	1N1693	200	.60	50A	20		115A	Si	DO3
114	FR063L	200	600m	50A	50		175A	Si	DO15
115	K3C5	200	.60	50	60		150C	Si	
116	P7F5	200	.60	50	30		175	Si	M343
117	RH1Z	200	600m	50	35	10m	130	Si△	A344i
118	RL063	200	600m	50A	50		175A	Si	DO41
119	BYT95A	200	0.6	60A	15	10m	175J	Si	A94y
120	1N3546	300	.60	25A	15		200A	Si	A1
121	A2D1	300	.60	25	60		175A	Si	A41q
122	A2D5	300	.60	25	60		175A	Si	A41q
123	A2D9	300	.60	25	60		175A	Si	A41q
124	B2D1	300	.60	25	60		175A	Si	A1rx
125	B2D5	300	.60	25	60		175A	Si	A1rx
126	B2D9	300	.60	25	60		175A	Si	A1rx
127	1N1694	300	.60	50A	20		115A	Si	DO3
128	K3D5	300	.60	50	60		150C	Si	
129	P7G5	300	.60	50	30		175	Si	M343
130	1N3547	400	.60	25A	15		200A	Si	A1
131	A2E1	400	.60	25	60		175A	Si	A41q
132	A2E5	400	.60	25	60		175A	Si	A41q
133	A2E9	400	.60	25	60		175A	Si	A41q
134	B2E1	400	.60	25	60		175A	Si	A1rx
135	B2E5	400	.60	25	60		175A	Si	A1rx
136	B2E9	400	.60	25	60		175A	Si	A1rx
137	FR064	400	0.6	25A	50	8.0m	175S	Si	D041
138	S16B	400	.60	25A	15			Si	A54
139	S1VB40	400	600m	40	15	1.0	150	Si	
140	1N1695	400	.60	50A	20		115A	Si	DO3
141	FR064L	400	600m	50A	50		175A	Si	DO15
142	K3E5	400	.60	50	60		150C	Si	
143	P7H5	400	.60	50	30		175	Si	M343
144	RH1	400	600m	50	35	10m	130	Si△	A344h
145	RL064	400	600m	50A	50		175A	Si	DO41
146	SH-1	400	600m	50A	30	10m	130J	Si	A271
147	BYT95B	400	0.6	60A	15	10m	175J	Si	A94y
148	1N3548	500	.60	25A	15		200A	Si	A1
149	A2F1	500	.60	25	60		175A	Si	A41q
150	A2F5	500	.60	25	60		175A	Si	A41q
151	A2F9	500	.60	25	60		175A	Si	A41q
152	B2F1	500	.60	25	60		175A	Si	A1rx
153	B2F5	500	.60	25	60		175A	Si	A1rx
154	B2F9	500	.60	25	60		175A	Si	A1rx
155	1N1696	500	.60	50A	20		115A	Si	DO3
156	K3F5	500	.60	50	60		150C	Si	
157	P7K5	500	.60	50	30		175	Si	M343
158	1N3549	600	.60	25A	15		200A	Si	A1
159	A2G1	600	.60	25	60		175A	Si	A41q
160	A2G5	600	.60	25	60		175A	Si	A41q
161	A2G9	600	.60	25	60		175A	Si	A41q
162	B2G1	600	.60	25	60		175A	Si	A1rx
163	B2G5	600	.60	25	60		175A	Si	A1rx
164	B2G9	600	.60	25	60		175A	Si	A1rx
165	FR065	600	0.6	25A	50	8.0m	175S	Si	D041
166	1N1697	600	.60	50A	20		115A	Si	DO3
167	FR065L	600	600m	50A	50		175A	Si	DO15
168	K3G5	600	.60	50	60		150C	Si	
169	P7M5	600	.60	50	30		175	Si	M343
170	RH1A	600	600m	50	35	10m	130	Si△	A344i
171	RL065	600	600m	50A	50		175A	Si	DO41
172	SH-1A	600	600m	50A	30	10m	130J	Si	A271
173	BYT95C	600	0.6	60A	15	10m	175J	Si	A94y
174	A2H1	700	.60	25	60		175A	Si	A41q
175	A2H5	700	.60	25	60		175A	Si	A41q
176	A2H9	700	.60	25	60		175A	Si	A41q
177	B2H1	700	.60	25	60		175A	Si	A1rx
178	B2H5	700	.60	25	60		175A	Si	A1rx
179	B2H9	700	.60	25	60		175A	Si	A1rx
180	K3H5	700	.60	50	60		150C	Si	
181	A2K1	800	.60	25	60		175A	Si	A41q
182	A2K5	800	.60	25	60		175A	Si	A41q
183	A2K9	800	.60	25	60		175A	Si	A41q
184	B2K1	800	.60	25	60		175A	Si	A1rx
185	B2K5	800	.60	25	60		175A	Si	A1rx
186	B2K9	800	.60	25	60		175A	Si	A1rx
187	FR066	800	0.6	25A	50	8.0m	175S	Si	D041
188	FR066L	800	600m	50A	50		175A	Si	DO15
189	K3K5	800	.60	50	60		150C	Si	
190	RH1B	800	600m	50	35	10m	130	Si△	A344i
191	RL066	800	600m	50A	50		175A	Si	DO41
192	SH-1B	800	600m	50A	30	10m	130J	Si	A271
193	KD209A	400	700m				85A	Si△	A355
194	KD209B	600	700m				85A	Si△	A355
195	1S1941B	20	750m	65A	35	10m	125J	Si	DO15
196	1N2072	50	.75	25A				Si	A53
197	1N2103	50 *	.75	25$			200	Si△	A53
198	A3A1	50	.75	25	60		175A	Si	A41q
199	A3A5	50	.75	25	60		175A	Si	A41q
200	A3A9	50	.75	25	60		175A	Si	A41q
201	B3A1	50	.75	25	60		175A	Si	A1rx
202	B3A5	50	.75	25	60		175A	Si	A1rx
203	B3A9	50	.75	25	60		175A	Si	A1rx
204	S76	50	.75	25$	20			Si	S48
205	UT111	50	.75	25A	15	8.3m		Si	A146f
206	ZS170	50	750m	25A	70 §		150A	Si	A52f
207	1N536	50	.75	50A	15		150A	Si△	DO3
208	1N1644	50	.75	50A	15		165A	Si	A53
209	1N2090	50	.75	50A	15		100A	Si△	M21
210	1N2609	50	.75	50A	30		175A	Si	A31a
211	1N3237	50	750m	50A	15		175S	Si	A1cs
212	1S030	50	.75	50A	40		150A	Si△	A89
213	A3A3	50	.75	50A	35		175A	Si	A41p
214	CER67F	50	.75	50A	50	8.0m	175A	Si	F29
215	M67	50	.75	50	50	8.3m	175	Si	A3h
216▼	S.75-050	50	750m	50	30		175J	Si	u5a
217	1S1941L	50	750m	65A	35	10m	125J	Si	DO15
218	1N2858	50	750m	75A	16		125A	Si	DO1
219	CER67	50	.75	75A	48	4.0m	150A	Si	DO27
220	W06A	50	750m	100L	20	10m	175J	Si	A277p

SYMBOLS AND CODES EXPLAINED IN INTERPRETER

5. GENERAL-PURPOSE RECTIFIERS - $I_0 \geq 500$ mA (Cont'd)

IN ORDER OF: (1) IO MAX (2) PIV (3) ° TEMP & (4) TYPE NMBER

LINE No.	4 TYPE NUMBER	2 PIV (V)	MAX AVG FWD DC CURRENT 1 Io MAX (A)	3 @ TEMP (°C)	MAX RATING SURGE CURR PEAK 1 Cy (A)	PULSE WIDTH (s)	MAX. TEMP (°C)	MAT	DRAWING No.
1	1N1487	100	.75	25A	15		140A	Si*	DO3
2	1N2073	100	.75	25A				Si	A53
3	1N2104	100 *	.75	25$			200	Si△	A53
4	1N3629	100	750m	25A	30		175A	Si	A344
5	75R1B	100	.75	25	60		175	Si	
6	A3B1	100	.75	25	60		175A	Si	A41q
7	A3B5	100	.75	25	60		175A	Si	A41q
8	A3B9	100	.75	25	60		175A	Si	A41q
9	B3B1	100	.75	25	60		175A	Si	A1rx
10	B3B5	100	.75	25	60		175A	Si	A1rx
11	B3B9	100	.75	25	60		175A	Si	A1rx
12	CODI531	100	.75	25$	35		150	Si	A52g
13	MB258	100	.75	25	15	8.3m	175A	Si	A60f
14	S91A	100	.75	25$	25			Si	A54
15	UT112	100	.75	25A	15	8.3m		Si	A146f
16	ZS171	100	750m	25A	70 §		150A	Si	A52f
17	1N440B	100	.75	50A	15		165A	Si△	DO3
18	1N537	100	.75	50A	15		150A	Si△	DO3
19	1N1081A	100	.75	50$	35			Si	F22
20	1N1645	100	.75	50A	15		165A	Si	A53
21	1N2091	100	.75	50A	15		100A	Si△	M21
22	1N2610	100	.75	50A	30		175A	Si	A31a
23	1N3238	100	750m	50A	15		175S	Si	A1cs
24	1N4364	100	.75	50A	35	2.0m	175	Si	DO3
25	1S031	100	.75	50A	40		150A	Si△	A89
26	1S40	100	.75	50A	25		150J	Si△	DO1
27	A3B3	100	.75	50A	35		175A	Si	A41p
28	M68	100	.75	50	50	8.3m	175	Si	A3h
29▼	S.75-100	100	750m	50	30		175J	Si	u5a
30	1N2859	100	750m	75A	16		125A	Si	
31	CER68	100	.75	75A	48	4.0m	150A	Si	DO27
32	S81	100	.75	80$	15			Si	A54
33	1N1556	100	.75	100C			150	Si	DO2
34	W06B	100	750m	100L	20	10m	175J	Si	A277p
35	1N2074	150	.75	25A				Si	A53
36	1N1646	150	.75	50A	15		165A	Si	A53
37	1N1488	200	.75	25A	15		140A	Si*	DO3
38	1N2069	200	.75	25A	22		100A	Si	A1es
39	1N2069A	200	750m	25A	22 §		100A	Si	A1es
40	1N2075	200	.75	25A				Si	A53
41	1N2105	200 *	.75	25$			200	Si△	A53
42	1N3630	200	750m	25A	30	8.3m	175A	Si	A344
43	1N3656	200	.75	25A	15		200A	Si	A60
44	75R2B	200	.75	25	60		175	Si	
45	A3C1	200	.75	25	60		175A	Si	A41q
46	A3C5	200	.75	25	60		175A	Si	A41q
47	A3C9	200	.75	25	60		175A	Si	A41q
48	B3C1	200	.75	25	60		175A	Si	A1rx
49	B3C5	200	.75	25	60		175A	Si	A1rx
50	B3C9	200	.75	25	60		175A	Si	A1rx
51	CODI532	200	.75	25$	35		150	Si	A52g
52	S92A	200	.75	25$	25			Si	A54
53	UPI2069	200	750m	25A	22		100A	Si	A1bg
54	UPI2069A	200	750m	25A	22		100A	Si	A1bg
55	UT113	200	.75	25A	15	8.3m		Si	A146f
56	ZS172	200	750m	25A	70 §		150A	Si	A52f
57	1N441B	200	.75	50A	15		165A	Si△	DO3
58	1N538	200	.75	50A	15		150A	Si△	DO3
59	1N1082A	200	.75	50$	35			Si	F22
60	1N1647	200	.75	50A	15		165A	Si	A53
61	1N2092	200	.75	50A	15		100A	Si△	M21
62	1N2611	200	.75	50A	30		175A	Si	A31a
63	1N3239	200	750m	50A	15		175S	Si	A1cs
64	1N4365	200	.75	50A	35	2.0m	175	Si	DO3
65	1S032	200	.75	50A	40		150A	Si△	A89
66	1S41	200	.75	50A	25		150J	Si△	DO1
67	2G8	200	.75	50A	15		150A	Si△	DO3
68	A3C3	200	.75	50A	35		175A	Si	A41p
69	M69	200	.75	50	50	8.3m	175	Si	A3h
70▼	S.75-200	200	750m	50	30		175J	Si	u5a
71	1N1440	200	.75	55A	30		150A	Si	A1gz
72	1N2482	200	.75	55	30		150A	Si	A3c
73	1N2485	200	.75	55A	75	4.0m	150	Si	A6b
74	1N3277	200	.75	70A	25	8.0m	150A	Si	A1cm
75	1N2860	200	750m	75A	16		125A	Si	
76	1N3193	200	.75	75A			100A	Si△	A50
77	1N3253	200	750m	75A	40		100A	Si	A50a
78	1N3639	200	750m	75A	40	8.3m	100A	Si	DO13
79	CER69	200	.75	75A	48	4.0m	150A	Si	DO27
80	S82	200	.75	80$	15			Si	A54
81	1N1557	200	.75	100C			150	Si	DO2
82	W06C	200	750m	100L	20	10m	175J	Si	A277p
83	MB252	225	.75	25	15	8.3m	175A	Si	A60f
84	UT211	225	.75	25A	15		175A	Si	A146f
85	1N2076	250	.75	25A				Si	A53
86	1N1648	250	.75	50A	15		165A	Si	A53
87	1N1489	300	.75	25A	15		140A	Si*	DO3
88	1N2077	300	.75	25A				Si	A53
89	1N2106	300 *	.75	25$			200	Si△	A53
90	1N3631	300	750m	25A	30	8.3m	175A	Si	A344
91	75R3B	300	.75	25	60		175	Si	
92	A3D1	300	.75	25	60		175A	Si	A41q
93	A3D5	300	.75	25	60		175A	Si	A41q
94	A3D9	300	.75	25	60		175A	Si	A41q
95	B3D1	300	.75	25	60		175A	Si	A1rx
96	B3D5	300	.75	25	60		175A	Si	A1rx
97	B3D9	300	.75	25	60		175A	Si	A1rx
98	CODI533	300	.75	25$	35		150	Si	A52g
99	S93A	300	.75	25$	25			Si	A54
100	UT114	300	.75	25A	15	8.3m		Si	A146f
101	UT212	300	.75	25A	15		175A	Si	A146f
102	1N442B	300	.75	50A	15		165A	Si△	DO3
103	1N539	300	.75	50A	15		150A	Si△	DO3
104	1N1083A	300	.75	50$	35			Si	F22
105	1N1649	300	.75	50A	15		165A	Si	A53
106	1N2093	300	.75	50A	15		100A	Si△	M21
107	1N2612	300	.75	50A	30		175A	Si	A31a
108	1N4366	300	.75	50A	35	2.0m	175	Si	DO3
109	1S42	300	.75	50A	25		150J	Si△	DO1
110	A3D3	300	.75	50A	35		175A	Si	A41p
111	SM30	300	.75	50$	14		175	Si	A41p
112	1N1441	300	.75	55A	30		150A	Si	A1gz
113	1N2486	300	.75	55A	75	4.0m	150	Si	A6b
114	1N2861	300	750m	75A	16		125A	Si	
115	S83	300	.75	80$	15			Si	A54
116	1N1558	300	.75	100C			150	Si	DO2
117	1N1650	350	.75	50A	15		165A	Si	A53
118	1N1490	400	.75	25A	15		140A	Si*	DO3
119	1N2070	400	.75	25A	22		100A	Si	A1es
120	1N2070A	400	750m	25A	22 §		100A	Si	A1es
121	1N2078	400	.75	25A				Si	A53
122	1N2107	400 *	.75	25$			200	Si△	A53
123	1N3632	400	750m	25A	30	8.3m	175A	Si	A344
124	1N3657	400	.75	25A	15		200A	Si	A60
125	75R4B	400	.75	25	60		175	Si	
126	A3E1	400	.75	25	60		175A	Si	A41q
127	A3E5	400	.75	25	60		175A	Si	A41q
128	A3E9	400	.75	25	60		175A	Si	A41q
129	B3E1	400	.75	25	60		175A	Si	A1rx
130	B3E5	400	.75	25	60		175A	Si	A1rx
131	B3E9	400	.75	25	60		175A	Si	A1rx
132	CODI534	400	.75	25$	35		150	Si	A52g
133	MB254	400	.75	25	15	8.3m	175A	Si	A60f
134	UPI2070	400	750m	25A	22		100A	Si	A1bg
135	UPI2070A	400	750m	25A	22		100A	Si	A1bg
136	UT115	400	.75	25A	15	8.3m		Si	A146f
137	UT213	400	750m	25A	15		175A	Si	A146f
138	ZS174	400	750m	25A	70 §		150A	Si	A52f
139	1N443B	400	.75	50A	15		165A	Si△	DO3
140	1N1084A	400	.75	50$	35			Si	F22
141	1N1651	400	.75	50A	15		165A	Si	A53
142	1N2094	400	.75	50A	15		100A	Si△	M21
143	1N2116	400	.75	50A	15		100A	Si	DO12
144	1N2613	400	.75	50A	30		175A	Si	A31a
145	1N3240	400	750m	50A	15		175S	Si	A1cs
146	1N4367	400	.75	50A	35	2.0m	175	Si	DO3
147	1S034	400	.75	50A	40		150A	Si△	A89
148	1S43	400	.75	50A	25		150J	Si△	DO1
149	A3E3	400	.75	50A	35		175A	Si	A41p
150	M70	400	.75	50	50	8.3m	175	Si	A3h
151▼	S.75-400	400	750m	50	30		175J	Si	u5a
152	1N2483	400	.75	55	30		150A	Si	A3c
153	1N2487	400	.75	55A	75	4.0m	150	Si	A6b
154	1N3278	400	.75	70A	25	8.0m	150A	Si	A1cm
155	1N2862	400	750m	75A	16		125A	Si	DO1
156	1N3194	400	.75	75A			100A	Si△	A50
157	1N3254	400	750m	75A	40		100A	Si	A50a
158	1N3640	400	750m	75A	40	8.3m	100A	Si	DO13
159	CER70	400	.75	75A	48	4.0m	150A	Si	DO27
160	S84	400	.75	80$	15			Si	A54
161	1N1559	400	.75	100C			150	Si	DO2
162	1N1491	500	.75	25A	15		120A	Si*	DO3
163	1N2079	500	.75	25A				Si	A53
164	1N2108	500 *	.75	25$			200	Si△	A53
165	1N3633	500	750m	25A	30	8.3m	175A	Si	A344
166	75R5B	500	.75	25	60		175	Si	
167	A3F1	500	.75	25	60		175A	Si	A41q
168	A3F5	500	.75	25	60		175A	Si	A41q
169	A3F9	500	.75	25	60		175A	Si	A41q
170	B3F1	500	.75	25	60		175A	Si	A1rx
171	B3F5	500	.75	25	60		175A	Si	A1rx
172	B3F9	500	.75	25	60		175A	Si	A1rx
173	CODI535	500	.75	25$	35		150	Si	A52g
174	UT117	500	.75	25A	15	8.3m		Si	A146f
175	UT214	500	.75	25A	15		175A	Si	A146f
176	1N444B	500	.75	35A	15		165A	Si△	DO3
177	1N1095	500	.75	35A	15		165A	Si	DO3
178	1N1652	500	.75	50A	15		165A	Si	A53
179	1N2095	500	.75	50A	15		100A	Si△	M21
180	1N2614	500	.75	50A	30		175A	Si	A31a
181	1N4368	500	.75	50A	35	2.0m	175	Si	DO3
182	A3F3	500	.75	50A	35		175A	Si	A41p
183	CER500F	500	.75	50A	50	8.0m	175A	Si	F29
184	H500	500	.75	50	15		175	Si	DO3
185	M500	500	.75	50	50	8.3m	175	Si	A3h
186	1N2488	500	.75	55A	75	4.0m	150	Si	A6b
187	1N2863	500	750m	75A	16		125A	Si	DO1
188	CER500	500	.75	75A	48	4.0m	150A	Si	DO27
189	S85	500	.75	80$	15			Si	A54
190	1N1560	500	.75	100C			150	Si	DO2
191	1N1492	600	.75	25A	15		120A	Si*	DO3
192	1N2071	600	.75	25A	22		100A	Si	A1es
193	1N2071A	600	750m	25A	22 §		100A	Si	A1es
194	1N3634	600	750m	25A	30	8.3m	175A	Si	A344
195	1N3658	600	.75	25A	15		200A	Si	A60
196	75R6B	600	.75	25	60		175	Si	
197	A3G1	600	.75	25	60		175A	Si	A41q
198	A3G5	600	.75	25	60		175A	Si	A41q
199	A3G9	600	.75	25	60		175A	Si	A41q
200	B3G1	600	.75	25	60		175A	Si	A1rx
201	B3G5	600	.75	25	60		175A	Si	A1rx
202	B3G9	600	.75	25	60		175A	Si	A1rx
203	CODI536	600	750m	25$	35		150	Si	A52g
204	MB256	600	750m	25	15	8.3m	175A	Si	A60f
205	UPI2071	600	750m	25A	22		100A	Si	A1bg
206	UPI2071A	600	750m	25A	22		100A	Si	A1bg
207	UT118	600	750m	25A	15	8.3m		Si	A146f
208	UT215	600	750m	25A	15		175A	Si	A146f
209	ZS176	600	750m	25A	70 §		150A	Si	A52f
210	1N445B	600	.75	30A	15		165A	Si△	DO3
211	1N1096	600	.75	30A	15		165A	Si	DO3
212	1N547	600	.75	50A	15	8.0m	150A	Si	DO3
213	1N1653	600	.75	50A	15		165A	Si	A53
214	1N2096	600	.75	50A	15		100A	Si△	M21
215	1N2615	600	.75	50A	30		175A	Si	A31a
216	1N3241	600	750m	50A	15		175S	Si	A1cs
217	1N4369	600	.75	50A	35	2.0m	175	Si	DO3
218	1S036	600	.75	50A	40		150A	Si△	A89
219	1S45	600	.75	50A	25		150J	Si△	DO1
220	A3G3	600	.75	50A	35		175A	Si	A41p

SYMBOLS AND CODES EXPLAINED IN INTERPRETER

5. GENERAL-PURPOSE RECTIFIERS – $I_O \geq 500$ mA (Cont'd)

IN ORDER OF: (1) IO MAX (2) PIV (3) ° TEMP & (4) TYPE NMBER

LINE No.	4 TYPE NUMBER	2 PIV (V)	MAX AVG FWD DC CURRENT 1 Io MAX (A)	3 @ TEMP (°C)	MAX RATING SURGE CURR PEAK 1 Cy (A)	PULSE WIDTH (s)	MAX. TEMP (°C)	MAT	DRAWING No.
1	CER71F	600	.75	50A	50	8.0m	175A	Si	F29
2	M71	600	.75	50	50	8.3m	175	Si	A3h
3▼	S.75-600	600	750m	50	30		175J	Si	u5a
4	1N1105	600	.75	55A	15	8.0m	175A	Si	DO1
5	1N2484	600	.75	55	30		150A	Si	A3c
6	1N2489	600	.75	55A	75	4.0m	150	Si	A6b
7	SRS160HE	600	750m	55A	20		175A	Si△	A340c
8	1N3279	600	.75	70A	25	8.0m	150A	Si	A1cm
9	1N2864	600	750m	75A	16		125A	Si	DO1
10	1N3195	600	.75	75A			100A	Si△	A50
11	1N3255	600	750m	75A	40		100A	Si	A50a
12	1N3641	600	750m	75A	40	8.3m	100A	Si	DO13
13	CER71	600	.75	75A	48	4.0m	150A	Si	DO27
14	S86	600	750m	80$	15			Si	A54
15	1N2772	700	.75	25A	15		165S	Si	A145
16	1N3635	700	750m	25A	30	8.3m	175A	Si	A344
17	75R7B	700	.75	25	60		175	Si	
18	A3H1	700	.75	25	60		175A	Si	A41q
19	A3H5	700	.75	25	60		175A	Si	A41q
20	A3H9	700	.75	25	60		175A	Si	A41q
21	B3H1	700	.75	25	60		175A	Si	A1rx
22	B3H5	700	.75	25	60		175A	Si	A1rx
23	B3H9	700	.75	25	60		175A	Si	A1rx
24	CODI537	700	750m	25$	25		150	Si	A52g
25	A3H3	700	.75	50A	35		175A	Si	A41p
26	SRS170HE	700	750m	55A	20		175A	Si△	A340c
27	1N2117	720	750m	50$				Si	DO3
28	1N3106	800	750m		30	8.3m	200A	Si△	A86c
29	1N2773	800	.75	25A	15		165S	Si	A145
30	1N3636	800	750m	25A	30	8.3m	175A	Si	A344
31	75R8B	800	.75	25	60		175	Si	
32	A3K1	800	.75	25	60		175A	Si	A41q
33	A3K5	800	.75	25	60		175A	Si	A41q
34	A3K9	800	.75	25	60		175A	Si	A41q
35	B3K1	800	.75	25	60		175A	Si	A1rx
36	B3K5	800	.75	25	60		175A	Si	A1rx
37	B3K9	800	.75	25	60		175A	Si	A1rx
38	CODI538	800	750m	25$	25		150	Si	A52g
39	UT119	800	750m	25A	15	8.3m		Si	A146f
40	ZS178	800	750m	25A	70 §		150A	Si	A52f
41	1N5214	800	.75	40A	50 §		175A	Si	A31q
42	1N2616	800	.75	50A	30		175A	Si	A31a
43	1N3242	800	750m	50A	15		175S	Si	A1cs
44	1S038	800	.75	50A	40		150A	Si△	A89
45	A3K3	800	.75	50A	35		175A	Si	A41p
46	H800	800	.75	50	15	10m	175	Si	DO3
47	M72	800	.75	50	50	8.3m	175	Si	A3h
48▼	S.75-800	800	750m	50	30		175J	Si	u5a
49	SRS180HE	800	750m	55A	20		175A	Si△	A340c
50	1S1944H	800	750m	65A	35	10m	125J	Si	DO15
51	1N3280	800	.75	70A	25	8.0m	150A	Si	A1cm
52	CER72	800	.75	75A	48	4.0m	150A	Si	DO27
53	1N2774	900	.75	25A	15		165S	Si	A145
54	1N3637	900	750m	25A	30	8.3m	175A	Si	A344
55	75R9B	900	.75	25	60		175	Si	
56	SRS190HE	900	750m	55A	20		175A	Si△	A340c
57▼	S.75-1000	1.0k	750m	50	30		175J	Si	u5a
58▼	S.75-1200	1.2k	750m	50	30		175J	Si	u5a
59	1N1100	100	.77	55A	15	8.0m	175A	Si	DO1
60	1N1101	200	.77	55A	15	8.0m	175A	Si	DO1
61	1N1102	300	.77	55A	15	8.0m	175A	Si	DO1
62	1N1103	400	.77	55A	15	8.0m	175A	Si	DO1
63	1N1104	500	.77	55A	15	8.0m	175A	Si	DO1
64	1N1486	500	.78	50A	20		150J	Si	A34a
65	1S108	900	.78	25A	20		150J	Si	A41k
66	1N1169	400	.79	80A	6.0		95A	Si△	A3k
67	K4A5	50	.80	50	60		150C	Si	
68	1N607	50	.80	100A	3.0	8.3m	150A	Si	DO4
69	1N607A	50	.80	100A	3.0	8.3m	150A	Si	DO4
70	1S2401	100	800m	40A	50	8.3m	130J	Si	A1bv
71	SR1FM2	100	800m	40A	50	8.3m	130J	Si	A1bv
72	1S1342	100	.80	50A	40	8.3m	150J	Si△	A89b
73	K4B5	100	.80	50	60		150C	Si	
74	1N608	100	.80	100A	3.0	8.3m	150A	Si	DO4
75	1N608A	100	.80	100A	3.0	8.3m	150A	Si	DO4
76	1N609	150	.80	100A	3.0	8.3m	150A	Si	DO4
77	1N609A	150	.80	100A	3.0	8.3m	150A	Si	DO4
78	B80C800	180	800m	50A	50	10m	125A	Si	M584a
79	1S2402	200	800m	40A	50	8.3m	130J	Si	A1bv
80	GU-1Z	200	800m	40	35	10m	125	Si△	A333
81	SR1FM4	200	800m	40A	50	8.3m	130J	Si	A1bv
82	1S1343	200	.80	50A	40	8.3m	150J	Si△	A89b
83	K4C5	200	.80	50	60		150C	Si	
84	1N610	200	.80	100A	3.0	8.3m	150A	Si	DO4
85	1N610A	200	.80	100A	3.0	8.3m	150A	Si	DO4
86	ID2580	250	800m		7.5k		190	Si	M681
87	1N5057	300	.80	40A	30 §		125A	Si	DO29
88	1S1344	300	.80	50A	40	8.3m	150J	Si△	A89b
89	K4D5	300	.80	50	60		150C	Si	
90	1N611	300	.80	100A	3.0	8.3m	150A	Si	DO4
91	1N611A	300	.80	100A	3.0	8.3m	150A	Si	DO4
92	BY406A	350	800m	75L	15	10m	150J	Si△	A298w
93	ID4080	400	800m		7.5k		190	Si	M681
94	1N5058	400	.80	40A	30 §		125A	Si	DO29
95	1S2403	400	800m	40A	50	8.3m	130J	Si	A1bv
96	GU-1	400	800m	40	35	10m	125	Si△	A333
97	SR1FM8	400	800m	40A	50	8.3m	130J	Si△	A1bv
98	1S1345	400	.80	50A	40	8.3m	150J	Si	A89b
99	K4E5	400	.80	50	60		150C	Si	
100	1N612	400	.80	100A	3.0	8.3m	150A	Si	DO4
101	1N612A	400	.80	100A	3.0	8.3m	150A	Si	DO4
102	K4F5	500	.80	50	60		150C	Si	
103	S-15	500	800m	60	100	10m		Si	A268
104	1N613	500	.80	100A	3.0	8.3m	150A	Si	DO4
105	1N613A	500	.80	100A	3.0	8.3m	150A	Si	DO4
106	ID6080	600	800m		7.5k		190	Si	M681
107	1S2404	600	800m	40A	50	8.3m	130J	Si	A1bv
108	GU-1A	600	800m	40	35	10m	125	Si△	A333
109	SR1FM12	600	800m	40A	50	8.3m	130J	Si△	A1bv
110	1S1346	600	.80	50A	40	8.3m	150J	Si△	A89b
111	B250C800	600	800m	50A	50	10m	125A	Si	M584a
112	K4G5	600	.80	50	60		150C	Si	
113	SLDV	600	800m	50A	30	8.0m	150A	Si	Alfu
114	1S2306	600	800m	65A	60		150J	Si	A56a
115	BY407A	600	800m	75L	15	10m	150J	Si△	A298w
116	1N614	600	.80	100A	3.0	8.3m	150A	Si	DO4
117	1N614A	600	.80	100A	3.0	8.3m	150A	Si	DO4
118	K4H5	700	.80	50	60		150C	Si	
119	ID8080	800	800m		7.5k		190	Si	M681
120	1S2405	800	800m	40A	50	8.3m	130J	Si△	A1bv
121	GU-1B	800	800m	40	35	10m	125	Si△	A333
122	1S1347	800	.80	50A	40	8.3m	150J	Si△	A89b
123	K4K5	800	.80	50	60		150C	Si	
124	RA-1B	800	800m	50A	40	10m	130J	Si	A334
125	RM1B	800	800m	50	40	10m	130	Si△	A344i
126	SLD.8S	800	800m	50A	55	8.0m	150A	Si	F22a
127	1S2307	800	800m	65A	60		150J	Si	A56a
128	1S106	700	.84	25A	20		150J	Si	A41k
129	A4A1	50	.85	25	60		175A	Si	A41q
130	A4A5	50	.85	25	60		175A	Si	A41q
131	A4A9	50	.85	25	60		175A	Si	A41q
132	B4A1	50	.85	25	60		175A	Si	A1rx
133	B4A5	50	.85	25	60		175A	Si	A1rx
134	B4A9	50	.85	25	60		175A	Si	A1rx
135	A4B1	100	.85	25	60		175A	Si	A41q
136	A4B5	100	.85	25	60		175A	Si	A41q
137	A4B9	100	.85	25	60		175A	Si	A41q
138	B4B1	100	.85	25	60		175A	Si	A1rx
139	B4B5	100	.85	25	60		175A	Si	A1rx
140	B4B9	100	.85	25	60		175A	Si	A1rx
141	SSiB0510	150	.85	45A	50	10m	150J	Si△	M441
142	A4C1	200	.85	25	60		175A	Si	A41q
143	A4C5	200	.85	25	60		175A	Si	A41q
144	A4C9	200	.85	25	60		175A	Si	A41q
145	B4C1	200	.85	25	60		175A	Si	A1rx
146	B4C5	200	.85	25	60		175A	Si	A1rx
147	B4C9	200	.85	25	60		175A	Si	A1rx
148	A4D1	300	.85	25	60		175A	Si	A41q
149	A4D5	300	.85	25	60		175A	Si	A41q
150	A4D9	300	.85	25	60		175A	Si	A41q
151	B4D1	300	.85	25	60		175A	Si	A1rx
152	B4D5	300	.85	25	60		175A	Si	A1rx
153	B4D9	300	.85	25	60		175A	Si	A1rx
154	SSiB0520	300	.85	45A	50	10m	150J	Si△	M441
155	A4E1	400	.85	25	60		175A	Si	A41q
156	A4E5	400	.85	25	60		175A	Si	A41q
157	A4E9	400	.85	25	60		175A	Si	A41q
158	B4E1	400	.85	25	60		175A	Si	A1rx
159	B4E5	400	.85	25	60		175A	Si	A1rx
160	B4E9	400	.85	25	60		175A	Si	A1rx
161	A4F1	500	.85	25	60		175A	Si	A41q
162	A4F5	500	.85	25	60		175A	Si	A41q
163	A4F9	500	.85	25	60		175A	Si	A41q
164	B4F1	500	.85	25	60		175A	Si	A1rx
165	B4F5	500	.85	25	60		175A	Si	A1rx
166	B4F9	500	.85	25	60		175A	Si	A1rx
167	A4G1	600	.85	25	60		175A	Si	A41q
168	A4G5	600	.85	25	60		175A	Si	A41q
169	A4G9	600	.85	25	60		175A	Si	A41q
170	B4G1	600	.85	25	60		175A	Si	A1rx
171	B4G5	600	.85	25	60		175A	Si	A1rx
172	B4G9	600	.85	25	60		175A	Si	A1rx
173	SSiB0540	600	.85	45A	50	10m	150J	Si△	M441
174	A4H1	700	.85	25	60		175A	Si	A41q
175	A4H5	700	.85	25	60		175A	Si	A41q
176	A4H9	700	.85	25	60		175A	Si	A41q
177	B4H1	700	.85	25	60		175A	Si	A1rx
178	B4H5	700	.85	25	60		175A	Si	A1rx
179	B4H9	700	.85	25	60		175A	Si	A1rx
180	A4K1	800	.85	25	60		175A	Si	A41q
181	A4K5	800	.85	25	60		175A	Si	A41q
182	A4K9	800	.85	25	60		175A	Si	A41q
183	B4K1	800	.85	25	60		175A	Si	A1rx
184	B4K5	800	.85	25	60		175A	Si	A1rx
185	B4K9	800	.85	25	60		175A	Si	A1rx
186	DS132	200	900m	60	40	10m	120	Si△	M594c
187	DS133	200	900m	60	40	10m	120	Si△	M594c
188	1S102	300	.90	25A	20		150J	Si	A41k
189	1S104	500	.90	25A	20		150J	Si	A41k
190	ST12	200	.95	55A	75	4.0m	100A	Si	C23
191	ST14	400	.95	55A	75	4.0m	100A	Si	C23
192	ST18	800	950m	55A	75	4.0m	100A	Si	C23

$I_O \geq 1$ A

LINE No.	TYPE NUMBER	PIV (V)	Io MAX (A)	TEMP (°C)	PEAK 1 Cy (A)	PULSE WIDTH (s)	MAX. TEMP (°C)	MAT	DRAWING No.
196	MBR120P	20	1.0	90L	25	16m	150J	Si△	A298V
197	S72	25	1.0	80$	15			Si	A54
198	A14U	25	1.0	100	30	8.3m	175J	Si	A94g
199	MBR130P	30	1.0	90L	25	16m	150J	Si△	A298V
200	MBR140P	40	1.0	90L	25	16m	150J	Si△	A298V
201	BYS21	45	1		50	10m	125J	Si	A1tc
202	BYS21-45	45	1.0	125C	50		150J	Si	A1abh
203	05SM1	50	1.0		40			Si	A3ah
204	KD202B	50	1.0				130C	Si△	S477
205	NS1000	50	1.0		60	8.3m		Si	DO27
206	1N2266	50	1.0	25$	20		150	Si△	DO4
207	1N2267	50	1.0	25$	20		150	Si△	S35
208	A5A1	50	1.0	25	60		175A	Si	A41q
209	A5A5	50	1.0	25	60		175A	Si	A41q
210	A5A9	50	1.0	25	60		175A	Si	A41q
211	B5A1	50	1.0	25	60		175A	Si	A1rx
212	B5A5	50	1.0	25	60		175A	Si	A1rx
213	B5A9	50	1.0	25	60		175A	Si	A1rx
214	DSF10A	50	1.0	25A	45		150J	Si△	A1abe
215	HRP22	50	1.0	25A	50	50m	125J	Si	DO41
216	ITT4000G	50	1.0	25	30	8.3m		Si	DO41
217	KBPS-005	50	1.0	25A	50		150S	Si	A418
218	RM4001G	50	1.0	25A	30	8.3m	175A	Si	F149
219▼	SM4001	50	1.0	25A	30	8.3m	175A	Si	F149
220	UR105Ø	50	1.0	25A	20	8.3m	175A	Si	A380

SYMBOLS AND CODES EXPLAINED IN INTERPRETER

5. GENERAL-PURPOSE RECTIFIERS - $I_O \geq 1$ A (Cont'd)

IN ORDER OF: (1) IO MAX (2) PIV (3) ♦ TEMP & (4) TYPE NMBER

LINE No.	4 TYPE NUMBER	2 PIV (V)	MAX AVG FWD DC CURRENT 1 Io MAX (A)	3 @ TEMP (°C)	MAX RATING SURGE CURR PEAK 1 Cy (A)	PULSE WIDTH (s)	MAX. TEMP (°C)	MAT	DRAWING No.
1	1N3246	50	1.0	50A	20		175S	Si	A1cs
2	HER101	50	1.0	50A	50		175A	Si	DO41
3	K5A5	50	1.0	50	60		150C	Si	
4▼	S1-050	50	1.0	50	40		175J	Si	u5b
5	WL005F	50	1.0	50	30	10m	150	Si	C204
6	A114F	50	1.0	55	3.5	8.3m	175J	Si	A94g
7	EGP10A	50	1.0	55A	30	8.3m	150	$	DO41
8	FE1A	50	1.0	55	30	8.3m	175	$	DO204A
9	FR101G	50	1.0	55A	50		175A	Si	DO41
10	UF4001	50	1.0	55C	30	8.3m	150J	Si	DO41
11	1SR35-50	50	1.0	70A	30		175J	Si△	DO41
12	1SR124-50	50	1.0	70A	30		175J	Si△	DO41
13	BYW27-50	50	1.0	70A	50	10m	150J	Si	A1bg
14	1N2858A	50	1.0	75A	40		135	Si	DO1
15♦	1N4001	50	1.0	75A	50	8.3m	175A	Si	DO41
16▼	1N4001F	50	1.0	75A	30			Si	DO41
17▼	1N4001G	50	1.0	75A	50	8.3m	175A	Si	DO41
18	10D05	50	1.0	75A	50			Si	DO39
19	BA5A5	50	1.0	75	30		175	Si	A1rx
20	GER4001	50	1.0	75	30		175	Si	A249b
21	GL41A(A)	50	1.0	75A	30	8.3m	150J	Si	F137
22	GPP1A	50	1.0	75A	60	8.3m	175J	Si	u10b
23	MDA100A	50	1.0	75A	30		150J	Si	M999
24▼	RL101	50	1.0	75A	50	8.3m	175A	Si	A395
25▼	RL101G	50	1.0	75A	50	8.3m	175A	Si	A395
26	SRS105	50	1.0	75	50	8.3m	175A	Si	A340
27	W03A	50	1.0	85L	20	10m	175J	Si	A277p
28	1N1034	50	1.0	100A	30 §	4.0m	170C	Si	S65a
29	1N1040	50	1.0	100A	30 §	4.0m	170C	Si	S66b
30	1N1046	50	1.0	100A	30 §	4.0m	170C	Si	S68b
31	A14F	50	1.0	100	4.0	8.3m	175J	Si	A94g
32	ER401	50	1.0	100	50		175	Si	DO41
33	DD2520	50	1.0	110A	50		150	Si△	M1018Ø
34	DD2520A	50	1.0	110A	50	10m	150A	Si△	M1018
35	DD1000	50	1.0	130L	50	10m	175A	Si△	DO15
36	1N2026	50	1.0	150C	25	8.3m	175C	Si	DO4
37	E1A3	50	1.0	150	200		175	Si	DO4
38	DA1000	60	1.0	130L	50	10m	175$	Si△	DO15
39	PLQ0.8	80	1.0	25A	20	10m	125J	Si	Albg
40	BYS21-90	90	1.0	25A	30		125J	Si	A1abh
41	1N253	95	1.0	135C	4.0		150A	Si	S11a
42	1SM1	100	1.0		40			Si	A3ah
43	DFH10B	100	1.0		60		125J	Si△	A1abe
44	ERB12-01	100	1.0		60		140J	Si	A387
45	KD202G	100	1.0				130C	Si△	S477
46	NS1001	100	1.0		60	8.3m		Si	DO27
47	SIB01-01	100	1.0		60		140J	Si	A21b
48	10DL1	100	1.0	25A	40		150J	Si	DO41
49	100R1B	100	1.0	25	60		175	Si	
50	A5B1	100	1.0	25	60		175A	Si	A41q
51	A5B5	100	1.0	25	60		175A	Si	A41q
52	A5B9	100	1.0	25	60		175A	Si	A41q
53	B5B1	100	1.0	25	60		175A	Si	A1rx
54	B5B5	100	1.0	25	60		175A	Si	A1rx
55	B5B9	100	1.0	25	60		175A	Si	A1rx
56	DSF10B	100	1.0	25A	45		150J	Si△	A1abe
57	PLQ1	100	1.0	25A	20	10m	125J	Si	Albg
58	RM4002G	100	1.0	25A	30	8.3m	175A	Si	F149
59▼	SM4002	100	1.0	25A	30	8.3m	175A	Si	F149
60	UR110Ø	100	1.0	25A	20	8.3m	175A	Si	A380
61	UT236	100	1.0	25A	20	8.3m	175A	Si	A60
62	E10DS1	100	1.0	31A	20	10m	150J	Si	M1008a
63	1N5004	100	1.0	40A	35 §		150A	Si	DO13
64	1N5055	100	1.0	40A	30 §		125A	Si	DO29
65	11E1	100	1.0	40A	45	10m	150J	Si	A1aay
66	B40C800	100	1.0	40A	40	10m	150	Si	C204
67	SM1A01Z	100	1.0	40A	45	10m	140J	Si	A405
68	SM-1A-01Z	100	1.0	40A	45	10m	140J	Si	A405
69	1N3247	100	1.0	50A	20		175S	Si	A1cs
70	E1	100	1.0	50	75 §		175	Si△	DO27
71	F14A	100	1.0	50A	45		175J	Si	A249a
72	GFD10B	100	1.0	50	30		125J	Si△	A249f
73	HER102	100	1.0	50A	50		175A	Si	DO41
74	K5B5	100	1.0	50	60		150C	Si	
75	MI101#B	100	1.0	50	50	10m	130S	Si	M1153
76	MI101R	100	1.0	50	50	10m	130S	Si	M1153
77	SM-1-01Z	100	1.0	50A	45	10m	140J	Si	A298a
78	SMB01	100	1.0	50A	45	10m	125J	Si	
79	WL01F	100	1.0	50	30	10m	150	Si	C204
80	A114A	100	1.0	55	3.5	8.3m	175J	Si	A94g
81	EGP10B	100	1.0	55A	30	8.3m	150	$	DO41
82	FE1B	100	1.0	55	30	8.3m	175	$	DO204A
83	FR102G	100	1.0	55A	50		175A	Si	DO41
84	SRS110	100	1.0	55A	50		175A	Si	A340
85	UF4002	100	1.0	55C	30	8.3m	150J	Si	DO41
86	1S1885	100	1.0	65A	60		150J	Si	A1jw
87	1SR35-100	100	1.0	70A	30		175J	Si△	DO41
88	1SR124-100	100	1.0	70A	30		175J	Si△	DO41
89	10E1	100	1.0	70A	50	10m	150J	Si	A1aaw
90	BYW27-100	100	1.0	70A	50	10m	150J	Si	A1bg
91	1N2859A	100	1.0	75A	40		135	Si	DO1
92♦	1N4002	100	1.0	75A	50	8.3m	175A	Si	DO41
93▼	1N4002F	100	1.0	75A	30			Si	DO41
94▼	1N4002G	100	1.0	75A	50	8.3m	175A	Si	DO41
95	10D1	100	1.0	75A	50		150J	Si	A1aaw
96	BA5B5	100	1.0	75	30		175	Si	A1rx
97	GER4002	100	1.0	75	30		175	Si	A249b
98	GL41B	100	1.0	75A	30	8.3m	150J	Si	F137
99	GPP1B	100	1.0	75A	60	8.3m	175J	Si	u10b
100	MDA101A	100	1.0	75A	30		150J	Si	M999
101	PBY125	100	1.0	75A	25		150C	Si	DO15
102▼	RL102	100	1.0	75A	50	8.3m	175A	Si	A395
103▼	RL102G	100	1.0	75A	50	8.3m	175A	Si	A395
104	GSB10B	100	1.0	85	30		150J	Si△	A249f
105	W03B	100	1.0	85L	20	10m	175J	Si	A277p
106	F14AP	100	1.0	90A	40	10m	175J	Si△	A94aa
107	1BZ61	100	1.0	100A	30	10m	175J	Si	A109e
108	1N1035	100	1.0	100A	30 §	4.0m	170C	Si	S65a
109	1N1041	100	1.0	100A	30 §	4.0m	170C	Si	S66b
110	1N1047	100	1.0	100A	30 §	4.0m	170C	Si	S68b
111	1N1551	100	1.0	100C			150	Si	DO4
112	A100	100	1.0	100	60	10m		Si	A1bc
113	ER402	100	1.0	100	50		175	Si	DO41
114	MR100	100	1.0	100A	50	8.0m	150A	Si	A1dk
115	DA1001	100	1.0	130L	50	10m	175$	Si△	DO15
116	DD1001	100	1.0	130L	50	10m	175A	Si△	DO15
117	1N338	100	1.0	150C			175B	Si	DO4
118	1N347	100	1.0	150C			175B	Si	DO4
119	E1B3	100	1.0	150	200		175	Si	DO4
120	BY125	150	1.0	25	40	10m	150J	Si	A283a
121	UR115Ø	150	1.0	25A	20	8.3m	175A	Si	A380
122	BY135	150	1.0	50A	50		150J	Si△	A1bg
123	EGP10C	150	1.0	55A	30	8.3m	150	$	DO41
124	FE1C	150	1.0	55	30	8.3m	175	$	DO204A
125	1N1036	150	1.0	100A	30 §	4.0m	170C	Si	S65a
126	1N1042	150	1.0	100A	30 §	4.0m	170C	Si	S66b
127	1N1048	150	1.0	100A	30 §	4.0m	170C	Si	S68b
128	DA1002	150	1.0	130L	50	10m	175$	Si△	DO15
129	2SM1	200	1.0		40			Si	A3ah
130	D302	200	1.0				70A	Ge*	S496
131	DFH10C	200	1.0		60		125J	Si△	A1abe
132	ERB12-02	200	1.0		60		140J	Si	A387
133	KD202E	200	1.0				130C	Si△	S477
134	NS1002	200	1.0		60	8.3m		Si	DO27
135	SIB01-02	200	1.0		60		140J	Si	A21b
136	10DL2	200	1.0	25A	40		150J	Si	DO41
137	100R2B	200	1.0	25	60		175	Si	
138	A5C1	200	1.0	25	60		175A	Si	A41q
139	A5C5	200	1.0	25	60		175A	Si	A41q
140	A5C9	200	1.0	25	60		175A	Si	A41q
141	B5C1	200	1.0	25	60		175A	Si	A1rx
142	B5C5	200	1.0	25	60		175A	Si	A1rx
143	B5C9	200	1.0	25	60		175A	Si	A1rx
144	DSF10C	200	1.0	25A	45		150J	Si△	A1abe
145	KBPS-02	200	1.0	25A	50		150S	Si	A418
146	RM4003G	200	1.0	25A	30	8.3m	175A	Si	F149
147▼	SM4003	200	1.0	25A	30	8.3m	175A	Si	F149
148	UR120Ø	200	1.0	25A	20	8.3m	175A	Si	A380
149	UT234	200	1.0	25A	20	8.3m	175A	Si	A60
150	E10DS2	200	1.0	31A	20	10m	150J	Si	M1008a
151	1N5005	200	1.0	40A	35 §		150A	Si	DO13
152	1N5056	200	1.0	40A	30 §		125A	Si	DO29
153	1N5211	200	1.0	40A	50 §		175A	Si	A31q
154	11E2	200	1.0	40A	45	10m	150J	Si	A1aay
155	GU-3Z	200	1.0	40	60	10m	140	Si△	A333b
156	SM1-02	200	1.0	40A	45	10m	125J	Si	A298a
157	SM-1A-02Z	200	1.0	40A	45	10m	140J	Si	A405
158	1G2	200	1.0	50A	50	8.3m	175A	Si	A313j
159	1N3248	200	1.0	50A	20		175S	Si	A1cs
160	1S2270	200	1.0	50	35	10m	175J	Si	
161	A5C2	200	1.0	50	60	8.3m	175	Si	A41p
162	F14B	200	1.0	50A	45		175J	Si	A249a
163	F114B	200	1.0	50A	40	10m	150J	Si△	A249a
164	GFD10C	200	1.0	50	30		125J	Si△	A249f
165	HER103	200	1.0	50A	50		175A	Si	DO41
166	K5C5	200	1.0	50	60		150C	Si	
167	MI102	200	1.0	50	50	10m	130S	Si	M1153
168	MI102R	200	1.0	50	50	10m	130S	Si	M1153
169	RA-1Z	200	1.0	50A	50	10m	130J	Si	A271a
170	RM1Z	200	1.0	50	50	10m	130	Si△	A344h
171	SM-1-02Z	200	1.0	50A	45	10m	140J	Si	A298a
172	SM-1A-02	200	1.0	50A	45	10m	140J	Si	A405
173	SMB02	200	1.0	50A	45	10m	125J	Si	
174	WL02F	200	1.0	50	30	10m	150	Si	C204
175	A114B	200	1.0	55	3.5	8.3m	175J	Si	A94g
176	EGP10D	200	1.0	55A	30	8.3m	150	$	DO41
177	FE1D	200	1.0	55	30	8.3m	175	$	DO204A
178	FR103G	200	1.0	55A	50		175A	Si	DO41
179	SRS120	200	1.0	55A	50		175A	Si	A340
180	UF4003	200	1.0	55C	30	8.3m	150J	Si	DO41
181	1N3866	200	1.0	60A	10 §		200A	Si	A1ds
182	1S1886	200	1.0	65A	60		150J	Si	A1jw
183	1N3757	200	1.0	70A	30		150A	Si	A1cm
184	1SR35-200	200	1.0	70A	30		175J	Si△	DO41
185	1SR124-200	200	1.0	70A	30		175J	Si△	DO41
186	10E2	200	1.0	70A	50	10m	150J	Si	A1aaw
187	BYW27-200	200	1.0	70A	50	10m	150J	Si	A1bg
188	H114B	200	1.0	70A	40	8.3m	150	Si	A94g
189	1N2860A	200	1.0	75A	40		135	Si	DO1
190♦	1N4003	200	1.0	75A	50	8.3m	175A	Si	DO41
191▼	1N4003F	200	1.0	75A	30			Si	DO41
192▼	1N4003G	200	1.0	75A	50	8.3m	175A	Si	DO41
193	10D2	200	1.0	75A	50		150J	Si	A1aaw
194	BA5C5	200	1.0	75	30		175	Si	A1rx
195	GER4003	200	1.0	75	30		175	Si	A249b
196	GL41D	200	1.0	75A	30	8.3m	150J	Si	F137
197	GPP1D	200	1.0	75A	60	8.3m	175J	Si	u10b
198	MDA102A	200	1.0	75A	30		150J	Si	M999
199▼	RL103	200	1.0	75A	50	8.3m	175A	Si	A395
200▼	RL103G	200	1.0	75A	50	8.3m	175A	Si	A395
201	GSB10C	200	1.0	85	30		150J	Si△	A249f
202	W03C	200	1.0	85L	20	10m	175J	Si	A277p
203	1S2392	200	1.0	90A	45	10m	175J	Si△	A249a
204	F14BP	200	1.0	90A	40	10m	175J	Si△	A94aa
205	1DZ61	200	1.0	100A	30	10m	175J	Si	A109e
206	1N1037	200	1.0	100A	30 §	4.0m	170C	Si	S65a
207	1N1043	200	1.0	100A	30 §	4.0m	170C	Si	S66b
208	1N1049	200	1.0	100A	30 §	4.0m	170C	Si	S68b
209	1N1552	200	1.0	100C			150	Si	DO4
210	1N3189	200	1.0	100C	30	8.3m	175C	Si	A31a
211	1N4383	200	1.0	100A	50		175A	Si	DO29
212	A14B	200	1.0	100	4.0	8.3m	175J	Si	A94g
213	ER403	200	1.0	100	50		175	Si	DO41
214	MR200	200	1.0	100A	50	8.0m	150A	Si	A1dk
215	R200	200	1.0	100	50 §	8.0u	150A	Si	
216	RO20	200	1.0	100C	50		175A	Si△	A1ef
217	DD2573	200	1.0	110A	50		150	Si△	M1018Ø
218	DD2573A	200	1.0	110A	50	10m	150A	Si△	M1018
219	DD1003	200	1.0	130L	50	10m	175A	Si△	DO15
220	1N2027	200	1.0	150C	25	8.3m	175C	Si	DO4

SYMBOLS AND CODES EXPLAINED IN INTERPRETER

5. GENERAL-PURPOSE RECTIFIERS - $I_0 \geq 1$ A (Cont'd)

IN ORDER OF: (1) IO MAX (2) PIV (3) ° TEMP & (4) TYPE NMBER

LINE No.	4 TYPE NUMBER	2 PIV (V)	MAX AVG FWD DC CURRENT 1 Io MAX (A)	3 @ TEMP (°C)	MAX RATING SURGE CURR PEAK 1 Cy (A)	PULSE WIDTH (s)	MAX. TEMP (°C)	MAT	DRAWING No.
1	E1C3	200	1.0	150	200		175	Si	DO4
2	UR125Ø	250	1.0	25A	20	8.3m	175A	Si	A380
3	E1D3	250	1.0	150	200		175	Si	DO4
4	SY-23	270	1.0	60A	80	10m	140J	SiΔ	A268e
5	KD202I	300	1.0				130C	SiΔ	S477
6	NS1003	300	1.0		60	8.3m		Si	DO27
7	SDR4007	300	1.0		50			Si#	DO4
8	100R3B	300	1.0	25	60		175	Si	
9	A5D1	300	1.0	25	60		175A	Si	A41q
10	A5D5	300	1.0	25	60		175A	Si	A41q
11	A5D9	300	1.0	25	60		175A	Si	A41q
12	B5D1	300	1.0	25	60		175A	Si	A1rx
13	B5D5	300	1.0	25	60		175A	Si	A1rx
14	B5D9	300	1.0	25	60		175A	Si	A1rx
15	B125C800	300	1.0	40A	40	10m	150	Si	C204
16	F14C	300	1.0	50A	45		175J	Si	A249a
17	HER104	300	1.0	50A	50		175A	Si	DO41
18	K5D5	300	1.0	50	60		150C	Si	
19	A114C	300	1.0	55	3.5	8.3m	175J	Si	A94g
20	1N2861A	300	1.0	75A	40		135	Si	DO1
21	BA5D5	300	1.0	75	30		175	Si	A1rx
22	F14CP	300	1.0	90A	40	10m	175J	SiΔ	A94aa
23	1N1038	300	1.0	100A	30 §	4.0m	170C	Si	S65a
24	1N1044	300	1.0	100A	30 §	4.0m	170C	Si	S66b
25	1N1050	300	1.0	100A	30 §	4.0m	170C	Si	S68b
26	1N1553	300	1.0	100			150	Si	DO4
27	A14C	300	1.0	100	4.0	8.3m	175J	Si	A94g
28	M100F	300	1.0	100	50		175	Si	DO41
29	1N2028	300	1.0	150C	25	8.3m	175C	Si	DO4
30	E1E3	300	1.0	150	200		175	Si	DO4
31	SY-24	350	1.0	60A	80	10m	140J	SiΔ	A268e
32	E1F3	350	1.0	150	200		175	Si	DO4
33	4SM1	400	1.0		40			Si	A3ah
34	DFH10E	400	1.0		60		125J	SiΔ	A1abe
35	ERB12-04	400	1.0		60		140J	Si	A387
36	KD202L	400	1.0				130C	SiΔ	S477
37	KD204A	400	1.0				85A	SiΔ	S476
38	MI104	400	1.0		50		130S	Si	M1153
39	NS1004	400	1.0		60	8.3m		Si	DO27
40	SDR4008	400	1.0		50			Si#	DO4
41	SIB01-04	400	1.0		60		140J	Si	A21b
42	1G4B42	400	1	25A	30	10m	150J	Si	
43	1N1415	400	1.0	25	10		200	Si	A154
44	100R4B	400	1.0	25	60		175	Si	
45	A5E1	400	1.0	25	60		175A	Si	A41q
46	A5E5	400	1.0	25	60		175A	Si	A41q
47	A5E9	400	1.0	25	60		175A	Si	A41q
48	B5E1	400	1.0	25	60		175A	Si	A1rx
49	B5E5	400	1.0	25	60		175A	Si	A1rx
50	B5E9	400	1.0	25	60		175A	Si	A1rx
51	DSF10E	400	1.0	25A	45		150J	SiΔ	A1abe
52	KBPS-04	400	1.0	25A	50		150S	Si	A418
53	PTC201	400	1.0	25	30			Si	A1bc
54	RM4004G	400	1.0	25A	30	8.3m	175A	Si	F149
55▼	SM4004	400	1.0	25A	30	8.3m	175A	Si	F149
56	TG4	400	1.0	25A	35		140J	Si	A1aat
57	UT235	400	1.0	25A	20	8.3m	175A	Si	A60
58	1N5006	400	1.0	40A	35 §		150A	Si	DO13
59	1N5212	400	1.0	40A	50 §		175A	Si	A31q
60	11E4	400	1.0	40A	45	10m	150J	Si	A1aay
61	GU-3	400	1.0	40	60	10m	140	SiΔ	A333b
62	SM1A04Z	400	1.0	40A	45	10m	140J	Si	A405
63	SM-1A-04Z	400	1.0	40A	45	10m	140J	Si	A405
64	1G4	400	1.0	50A	50	8.3m	175A	Si	A313j
65	1N3249	400	1.0	50A	20		175S	Si	A1cs
66	1S2271	400	1.0	50	35	10m	175J	Si	
67	A5E2	400	1.0	50	60	8.3m	175	Si	A41p
68	DFC10E	400	1.0	50	60		125J	SiΔ	
69	F14D	400	1.0	50A	45		175J	Si	A249a
70	F114D	400	1.0	50A	40	10m	150J	SiΔ	A249a
71	GFD10E	400	1.0	50	30		125J	SiΔ	A249f
72	HER105	400	1.0	50A	50		175A	Si	DO41
73	K5E5	400	1.0	50	60		150C	Si	
74	MI104R	400	1.0	50	50	10m	130S	Si	M1153
75	RA-1	400	1.0	50A	50	10m	130J	Si	A271a
76	RM1	400	1.0	50	50	10m	130	SiΔ	A344h
77	SM-1-04Z	400	1.0	50A	45	10m	140J	Si	A298a
78	SM-1A-04	400	1.0	50A	45	10m	140J	Si	A405
79	SMB04	400	1.0	50A	45	10m	125J	Si	
80	WL04F	400	1.0	50	30	10m	150	Si	C204
81	A114D	400	1.0	55	3.5	8.3m	175J	Si	A94g
82	FR104G	400	1.0	55A	50		175A	Si	DO41
83	SRS140	400	1.0	55A	50		175A	Si	A340
84	UF4004	400	1.0	55C	30	8.3m	150J	Si	DO41
85	1N3867	400	1.0	60A	10 §		200A	Si	A1ds
86	1S1887	400	1.0	65A	60		150J	Si	A1jw
87	1N3758	400	1.0	70A	30		150A	Si	A1cm
88	1SR35-400	400	1.0	70A	30		175J	SiΔ	DO41
89	1SR124-400	400	1.0	70A	30		175J	SiΔ	DO41
90	10E4	400	1.0	70A	50	10m	150J	Si	A1aaw
91	BYW27-400	400	1.0	70A	50	10m	150J	Si	A1bg
92	H114D	400	1.0	70A	40	8.3m	150	Si	A94g
93	1N1763A	400	1.0	75A	40		135	Si	DO1
94	1N2862A	400	1.0	75A	40		135	Si	DO1
95♦	1N4004	400	1.0	75A	50	8.3m	175A	Si	DO41
96▼	1N4004F	400	1.0	75A	30			Si	DO41
97▼	1N4004G	400	1.0	75A	50	8.3m	175A	Si	DO41
98	10D4	400	1.0	75A	50		150J	Si	A1aaw
99	BA5E5	400	1.0	75	30		175	Si	A1rx
100	GER4004	400	1.0	75	30		175	Si	A249b
101	GL41G	400	1.0	75A	30	8.3m	150J	Si	F137
102	GPP1G	400	1.0	75A	60	8.3m	175J	Si	u10b
103	MDA104A	400	1.0	75A	30		150J	Si	M999
104	PL4HZ	400	1.0	75A	50	10m	150J	Si	A1bg
105▼	RL104	400	1.0	75A	50	8.3m	175A	Si	A395
106▼	RL104G	400	1.0	75A	50	8.3m	175A	Si	A395
107	GSB10E	400	1.0	85	30		150J	SiΔ	A249f
108	1S2394	400	1.0	90A	45	10m	175J	SiΔ	A249a
109	F14DP	400	1.0	90A	40	10m	175J	SiΔ	A94aa
110	1GZ61	400	1.0	100A	30	10m	175J	Si	A109e
111	1N1039	400	1.0	100A	30 §	4.0m	170C	Si	S65a
112	1N1045	400	1.0	100A	30 §	4.0m	170C	Si	S66b
113	1N1051	400	1.0	100A	30 §	4.0m	170C	Si	S68b
114	1N1554	400	1.0	100C			150	Si	DO4
115	1N3190	400	1.0	100C	30	8.3m	175C	Si	A31a
116	1N4384	400	1.0	100A	50		175A	Si	DO29
117	A14D	400	1.0	100	4.0	8.3m	175J	Si	A94g
118	ER404	400	1.0	100	50		175	Si	DO41
119	MR400	400	1.0	100A	50	8.0m	150A	Si	A1dk
120	R400	400	1.0	100	50 §	8.0u	150A	Si	
121	RO40	400	1.0	100C	50		175A	SiΔ	A1ef
122	DA1006	400	1.0	130L	50	10m	150A	SiΔ	A3k
123	DD1006	400	1.0	130L	50	10m	175A	SiΔ	DO15
124	DD1056	400	1.0	130L	25	10m	150A	SiΔ	DO15
125	1N2029	400	1.0	150C	25	8.3m	175C	Si	DO4
126	E1G3	400	1.0	150	200		175	Si	DO4
127	SDR4009	450	1.0		50			Si#	DO4
128	PBY126	450	1.0	75A	25		150C	Si	DO15
129	KD202N	500	1.0				130C	SiΔ	S477
130	NS1005	500	1.0		60	8.3m		Si	DO27
131	1N2268	500	1.0	25$	20		150	SiΔ	DO4
132	1N2269	500	1.0	25$	20		150	SiΔ	S35
133	100R5B	500	1.0	25	60		175	Si	
134	A5F1	500	1.0	25	60		175A	Si	A41q
135	A5F5	500	1.0	25	60		175A	Si	A41q
136	A5F9	500	1.0	25	60		175A	Si	A41q
137	B5F1	500	1.0	25	60		175A	Si	A1rx
138	B5F5	500	1.0	25	60		175A	Si	A1rx
139	B5F9	500	1.0	25	60		175A	Si	A1rx
140	UT237	500	1.0	25A	20	8.3m	175A	Si	A60
141	F14E	500	1.0	50A	45		175J	Si	A249a
142	F114E	500	1.0	50A	40	10m	150J	SiΔ	A249a
143	K5F5	500	1.0	50	60		150C	Si	
144	A114E	500	1.0	55	3.5	8.3m	175J	Si	A94g
145	1N1764A	500	1.0	75A	40		135	Si	DO1
146	1N2863A	500	1.0	75A	40		135	Si	DO1
147	BA5F5	500	1.0	75	30		175	Si	A1rx
148	1N1555	500	1.0	100C			150	Si	DO4
149	A14E	500	1.0	100	4.0	8.3m	175J	Si	A94g
150	1N2030	500	1.0	150C	25	8.3m	175C	Si	DO4
151	E1H3	500	1.0	150	200		175	Si	DO4
152	6SM1	600	1.0		40			Si	A3ah
153	BY360-600	600	1.0		45	10m	125J	Si	A1df
154	DFH10G	600	1.0		60		125J	SiΔ	A1abe
155	ERB12-06	600	1.0		60		140J	Si	A387
156	KD202S	600	1.0				130C	SiΔ	S477
157	NS1006	600	1.0		60	8.3m		Si	DO27
158	SIB01-06	600	1.0		60		140J	Si	A21b
159	1N2270	600	1.0	25$	20		150	SiΔ	DO4
160	1N2271	600	1.0	25$	20		150	SiΔ	S35
161	100R6B	600	1.0	25	60		175	Si	
162	A5G1	600	1.0	25	60		175A	Si	A41q
163	A5G5	600	1.0	25	60		175A	Si	A41q
164	A5G9	600	1.0	25	60		175A	Si	A41q
165	B5G1	600	1.0	25	60		175A	Si	A1rx
166	B5G5	600	1.0	25	60		175A	Si	A1rx
167	B5G9	600	1.0	25	60		175A	Si	A1rx
168	DSA10G	600	1.0	25	30		150J	SiΔ	A298r
169	DSF10G	600	1.0	25A	45		150J	SiΔ	A1abe
170	KBPS-06	600	1.0	25A	50		150S	Si	A418
171	PTC202	600	1.0	25	30			Si	A1bc
172▼	SM4005	600	1.0	25A	30	8.3m	175A	Si	F149
173	TG6	600	1.0	25A	35		140J	Si	A1aat
174	UT238	600	1.0	25A	20	8.3m	175A	Si	A60
175	1N5007	600	1.0	40A	35 §		150A	Si	DO13
176	1N5213	600	1.0	40A	50 §		175A	Si	A31q
177	GU-3A	600	1.0	40	60	10m	140	SiΔ	A333b
178	SM1A06	600	1.0	40A	45	10m	140J	Si	A437
179	1G6	600	1.0	50A	50	8.3m	175A	Si	A313j
180	1N3250	600	1.0	50A	20		175S	Si	A1cs
181	1S2272	600	1.0	50	35	10m	175J	Si	
182	A5G2	600	1.0	50	60	8.3m	175	Si	A41p
183	BY134	600	1.0	50A	50		150J	SiΔ	A1bg
184	DFC10G	600	1.0	50	60		125J	SiΔ	
185	F14F	600	1.0	50A	45		175J	Si	A249a
186	F114F	600	1.0	50A	40	10m	150J	SiΔ	A249a
187	GFD10G	600	1.0	50	30		125J	SiΔ	A249f
188	K5G5	600	1.0	50	60		150C	Si	
189	MI106	600	1.0	50	50	10m	130S	Si	M1153
190	MI106R	600	1.0	50	50	10m	130S	Si	M1153
191	RA-1A	600	1.0	50A	50	10m	130J	Si	A271a
192	RM1A	600	1.0	50	50	10m	130	SiΔ	A344i
193	RU2	600	1.0	50	20	10m	130	SiΔ	A344h
194	SM-1A-06	600	1.0	50A	45	10m	140J	Si	A374a
195	WL06F	600	1.0	50	30	10m	150	Si	C204
196	A114M	600	1.0	55	3.5	8.3m	175J	Si	A94g
197	FR105G	600	1.0	55A	50		175A	Si	DO41
198	S600HE	600	1.0	55A	20		150	Si	M1310
199	SRS160	600	1.0	55A	50		175A	Si	A340
200	1N3868	600	1.0	60A	10 §		200A	Si	A1ds
201	DS135	600	1.0	60A	45	10m	120	Si	DO41
202	1S1888	600	1.0	65A	60		150J	Si	A1jw
203	1N3759	600	1.0	70A	30		150A	Si	A1cm
204	10E6	600	1.0	70A	50	10m	150J	Si	A1aaw
205	BYW27-600	600	1.0	70A	50	10m	150J	Si	A1bg
206	H114M	600	1.0	70A	40	8.3m	150	Si	A94g
207	1N2864A	600	1.0	75A	40		135	Si	DO1
208♦	1N4005	600	1.0	75A	50	8.3m	175A	Si	DO41
209▼	1N4005F	600	1.0	75A	30			Si	DO41
210▼	1N4005G	600	1.0	75A	50	8.3m	175A	Si	DO41
211	10D6	600	1.0	75A	50		150J	Si	A1aaw
212	BA5G5	600	1.0	75	30		175	Si	A1rx
213	GER4005	600	1.0	75	30		175	Si	A249b
214	GL41J	600	1.0	75A	30	8.3m	150J	Si	F137
215	GPP1J	600	1.0	75A	60	8.3m	175J	Si	u10b
216	MDA106A	600	1.0	75A	30		150J	Si	M999
217	PL6HZ	600	1.0	75A	50	10m	150J	Si	A1bg
218▼	RL105	600	1.0	75A	50	8.3m	175A	Si	A395
219▼	RL105G	600	1.0	75A	50	8.3m	175A	Si	A395
220	1S2606	600	1.0	80A	45		165J	SiΔ	A249a

SYMBOLS AND CODES EXPLAINED IN INTERPRETER

5. GENERAL-PURPOSE RECTIFIERS - $I_o \geq 1$ A (Cont'd)

IN ORDER OF: (1) IO MAX (2) PIV
(3) ° TEMP & (4) TYPE NMBER

LINE No.	4 TYPE NUMBER	2 PIV (V)	MAX AVG FWD DC CURRENT 1 Io MAX (A)	3 @ TEMP (°C)	MAX RATING SURGE CURR PEAK 1 Cy (A)	PULSE WIDTH (s)	MAX. TEMP (°C)	MAT	DRAWING No.
1	GSB10G	600	1.0	85	30		150J	SiΔ	A249f
2	1S2396	600	1.0	90A	45	10m	175J	SiΔ	A249a
3	1JZ61	600	1.0	100A	30	10m	175J	Si	A109e
4	1N3191	600	1.0	100C	30	8.3m	175C	Si	A31a
5	1N4385	600	1.0	100A	50		175A	Si	DO29
6	A14M	600	1.0	100	50	8.3m	175J	Si	A94g
7	A600	600	1.0	100	60	10m		Si	A1by
8	ER405	600	1.0	100	50		175	Si	DO41
9	MR600	600	1.0	100A	50	8.0m	150A	Si	A1dk
10	R600	600	1.0	100	50 §	8.0u	150A	Si	
11	1N2031	600	1.0	150C	25	8.3m	175C	Si	DO4
12	E1K3	600	1.0	150	200		175	Si	DO4
13	PY126	650	1.0	75	100	10m	150J	Si	A1bg
14	BY126	650	1.0	150J	40 §	10m	150J	SiΔ	A283a
15	NS1007	700	1.0		60	8.3m		Si	DO27
16	100R7B	700	1.0	25	60		175	Si	
17	A5H1	700	1.0	25	60		175A	Si	A41q
18	A5H5	700	1.0	25	60		175A	Si	A41q
19	A5H9	700	1.0	25	60		175A	Si	A41q
20	B5H1	700	1.0	25	60		175A	Si	A1rx
21	B5H5	700	1.0	25	60		175A	Si	A1rx
22	B5H9	700	1.0	25	60		175A	Si	A1rx
23	K5H5	700	1.0	50	60		150C	Si	
24	BA5H5	700	1.0	75	30		175	Si	A1rx
25	A5H2	700	1.0	100A	45		200A	Si	A41p
26	E1M3	700	1.0	150	200		175	Si	DO4
27	8SM1	800	1.0		40			Si	A3ah
28	DFH10J	800	1.0		50		125J	SiΔ	A1abe
29	NS1008	800	1.0		60	8.3m		Si	DO27
30	1N1226A	800	1.0	25A	25		140A	Si	DO1
31	1N2222	800	1.0	25$	20		150	SiΔ	DO4
32	1N2222A	800	1.0	25$	20		150	SiΔ	DO4
33	1N2223	800	1.0	25$	20		150	SiΔ	S35
34	1N2223A	800	1.0	25$	20		150	SiΔ	S35
35	100R8B	800	1.0	25	60		175	Si	
36	A5K1	800	1.0	25	60		175A	Si	A41q
37	A5K5	800	1.0	25	60		175A	Si	A41q
38	A5K9	800	1.0	25	60		175A	Si	A41q
39	B5K1	800	1.0	25	60		175A	Si	A1rx
40	B5K5	800	1.0	25	60		175A	Si	A1rx
41	B5K9	800	1.0	25	60		175A	Si	A1rx
42	DSA10J	800	1.0	25	30		150J	SiΔ	A298r
43	KBPS-08	800	1.0	25A	50		150S	Si	A418
44▼	SM4006	800	1.0	25A	30	8.3m	175A	Si	F149
45	TG8	800	1.0	25A	35		140J	Si	A1aat
46	UT361	800	1.0	25A	20	8.3m	175	Si	A380
47	GU-3B	800	1.0	40	60	10m	140	SiΔ	A333b
48	SM1-08	800	1.0	40	45	10m	125	Si	A298a
49	SM1A08	800	1.0	40A	45	10m	140J	Si	A437
50	SM-1A-08	800	1.0	40A	45	10m	140J	Si	A437
51	1G8	800	1.0	50A	50	8.3m	175A	Si	A313j
52	1LE11	800	1.0	50C	50	10m	150J	Si	A299
53	1N3251	800	1.0	50A	20		175S	Si	A1cs
54	1N4585	800	1.0	50A	50		175A	Si	DO29
55	1S2273	800	1.0	50	35	10m	175J	Si	
56	F14H	800	1.0	50A	45		175J	Si	A249a
57	K5K5	800	1.0	50	60		150C	Si	
58	RU2B	800	1.0	50	20	10m	130	SiΔ	A344i
59	SMB08	800	1.0	50A	45	10m	125J	Si	
60	WL08F	800	1.0	50	30	10m	150	Si	C204
61	F8	800	1.0	55A	70			Si	A3r
62	FR106G	800	1.0	55A	50		175A	Si	DO41
63	S800HE	800	1.0	55A	20		150	Si	M1310
64	SRS180	800	1.0	55A	50		175A	Si	A340
65	BY127	800	1.0	58C	40	10m	150J	Si	A171b
66	DS130T	800	1.0	60A	50	10m	125	Si	A395
67	SB-2B	800	1.0	60A	100	10m	150J	Si	A268
68	1S1829	800	1.0	65A	45	10m	125J	Si	DO15
69	1N3760	800	1.0	70A	30		150A	Si	A1cm
70	10E8	800	1.0	70A	50	10m	150J	Si	A1aaw
71	BYW27-800	800	1.0	70A	50	10m	150J	Si	A1bg
72♦	1N4006	800	1.0	75A	50	8.3m	175A	Si	DO41
73▼	1N4006F	800	1.0	75A	30			Si	DO41
74▼	1N4006G	800	1.0	75A	50	8.3m	175A	Si	DO41
75	10D8	800	1.0	75A	50		150J	Si	A1aaw
76	BA5K5	800	1.0	75	30		175	Si	A1rx
77	GER4006	800	1.0	75	30		175	Si	A249b
78	GL41K	800	1.0	75A	30	8.3m	150J	Si	F137
79	GPP1K	800	1.0	75A	60	8.3m	175J	Si	u10b
80	MDA108A	800	1.0	75A	30		150J	Si	M999
81	PBY127	800	1.0	75A	25		150C	Si	DO15
82	PL8HZ	800	1.0	75A	50	10m	150J	Si	A1bg
83▼	RL106	800	1.0	75A	50	8.3m	175A	Si	A395
84▼	RL106G	800	1.0	75A	50	8.3m	175A	Si	A395
85	1S2608	800	1.0	80A	45		165J	SiΔ	A249a
86	GSB10J	800	1.0	85	30		150J	SiΔ	A249f
87	1S2398	800	1.0	90A	45	10m	175J	SiΔ	A249a
88	1LZ61	800	1.0	100A	30	10m	175J	Si	A109e
89	A5K2	800	1.0	100A	45		200A	Si	A41p
90	A14N	800	1.0	100	50	8.3m	175J	Si	A94g
91	A800	800	1.0	100	60	10m		Si	A1by
92	ER406	800	1.0	100	50		175	Si	DO41
93	MR800	800	1.0	100A	50	8.0m	150A	Si	A1dk
94	R800	800	1.0	100	50 §	8.0u	150A	Si	
95	RO80	800	1.0	100C	50		175A	SiΔ	A1ef
96	DA1058	800	1.0	130L	25	10m	150A	SiΔ	DO15
97	DD1058	800	1.0	130L	25	10m	150A	SiΔ	DO15
98	1N3566	800	1.0	150C	20	8.3m	175C	Si	DO4
99	1N3649	800	1.0	150C	25	8.3m	175C	Si	DO4Ø
100	E1N3	800	1.0	150	200		175	Si	DO4
101	100R9B	900	1.0	25	60		175	Si	
102	B380C800	900	1.0	40A	40	10m	150	Si	C204
103	AD-29	900	1.0	60A	80	10m	140J	Si	A268
104▼	S1-1200	1.2k	1.0	50	40		175J	Si	u5b
105	HCV	15	1.1	25A	50	2.0m	150A	Si	DO27
106	MCV	15	1.1	50	50	8.3m	175	Si	A3h
107	HC30	30	1.1	25A	50	2.0m	150A	Si	DO27
108	MC30#B	30	1.1	50	50	8.3m	175	Si	A3h
109	HC67	50	1.1	25A	50	2.0m	150A	Si	DO27
110	HC67F	50	1.1	50A	50	8.0m	175A	Si	F29
111	MH67	50	1.1	50	50	8.3m	175	Si	A3h
112	HC68	100	1.1	25A	50	2.0m	150A	Si	DO27
113	HC68F	100	1.1	50A	50	8.0m	175A	Si	F29
114	MH68	100	1.1	50	50	8.3m	175	Si	A3h
115	V06B	100	1.1	90L	35	10m	175J	Si	A333
116	SSiB0610	150	1.1	45A	50	10m	160J	SiΔ	A3v
117	SSiC1710	150	1.1	45A	100	10m	150J	SiΔ	M441
118	HC69	200	1.1	25A	50	2.0m	150A	Si	DO27
119	HC69F	200	1.1	50A	50	8.0m	175A	Si	F29
120	MH69	200	1.1	50	50	8.3m	175	Si	A3h
121	SSiB0620	300	1.1	45A	50	10m	160J	SiΔ	A3v
122	SSiC1720	300	1.1	45A	100	10m	150J	SiΔ	M441
123	V06C	300 %	1.1	90L	35	10m	175J	Si	A333
124	HC70	400	1.1	25A	50	2.0m	150A	Si	DO27
125	HC70F	400	1.1	50A	50	8.0m	175A	Si	F29
126	MH70	400	1.1	50	50	8.3m	175	Si	A3h
127	1N4089	400	1.1	85A	75		150S	Si	A3t
128	V08E	400	1.1	90L	35	10m	175J	Si	A333
129	HC700	400	1.1	100A	30		150A	SiΔ	A3c
130	HC500	500	1.1	25A	50	2.0m	150A	Si	DO27
131	HC500F	500	1.1	50A	50	8.0m	175A	Si	F29
132	MH500	500	1.1	50	50	8.3m	175	Si	A3h
133	V06E	500 %	1.1	90L	35	10m	175J	Si	A333
134	HC71	600	1.1	25A	50	2.0m	150A	Si	DO27
135	SSiB0640	600	1.1	45A	50	10m	160J	SiΔ	A3v
136	SSiC1740	600	1.1	45A	100	10m	150J	SiΔ	M441
137	HC71F	600	1.1	50A	50	8.0m	175A	Si	F29
138	MH71	600	1.1	50	50	8.3m	175	Si	A3h
139	V08G	600	1.1	90L	35	10m	175J	Si	A333
140	1N1225A	700	1.1	25A	25		145A	Si	DO1
141	HC72	800	1.1	25A	50	2.0m	150A	Si	DO27
142	1N4514	800	1.1	50A	50 §		175A	Si	A52c
143	HC72F	800	1.1	50A	50	8.0m	175A	Si	F29
144	MH72	800	1.1	50	50	8.3m	175	Si	A3h
145	V06G	800 %	1.1	90L	35	10m	175J	Si	A333
146	V08J	800	1.1	90L	35	10m	175J	Si	A333
147	BY188	25	1.2	40A	40		150J	SiΔ	A283a
148	BY188A	50	1.2					Si	A283aØ
149	BY188B	50	1.2					Si	A283aØ
150	A6A1	50	1.2	25	60		175A	Si	A41q
151	A6A5	50	1.2	25	60		175A	Si	A41q
152	A6A9	50	1.2	25	60		175A	Si	A41q
153	B6A1	50	1.2	25	60		175A	Si	A1rx
154	B6A5	50	1.2	25	60		175A	Si	A1rx
155	B6A9	50	1.2	25	60		175A	Si	A1rx
156	K6A5	50	1.2	50	60		150C	Si	
157	A6B1	100	1.2	25	60		175A	Si	A41q
158	A6B5	100	1.2	25	60		175A	Si	A41q
159	A6B9	100	1.2	25	60		175A	Si	A41q
160	B6B1	100	1.2	25	60		175A	Si	A1rx
161	B6B5	100	1.2	25	60		175A	Si	A1rx
162	B6B9	100	1.2	25	60		175A	Si	A1rx
163	B40C1000	100	1.2	40A	50	10m	150	Si	C204
164	K6B5	100	1.2	50	60		150C	Si	
165	1S1885A	100	1.2	60A	100	10m	150J	Si	DO15
166	ERC04-02	200	1.2		100		140J	Si	A21b
167	A6C1	200	1.2	25	60		175A	Si	A41q
168	A6C5	200	1.2	25	60		175A	Si	A41q
169	A6C9	200	1.2	25	60		175A	Si	A41q
170	B6C1	200	1.2	25	60		175A	Si	A1rx
171	B6C5	200	1.2	25	60		175A	Si	A1rx
172	B6C9	200	1.2	25	60		175A	Si	A1rx
173	B80C1000	200	1.2	40A	50	10m	150	Si	C204
174	K6C5	200	1.2	50	60		150C	Si	
175	MR1Z	200	1.2	50J	100	10m	140S	Si	A284a
176	RO2Z	200	1.2	50	80	10m	130	SiΔ	A344l
177	BYW95A	200	1.2	55A	50	10m	165J	Si	A333d
178	1S1886A	200	1.2	60A	100	10m	150J	Si	DO15
179	RM2Z	200	1.2	90	100	10m		Si	A344l
180	A6D1	300	1.2	25	60		175A	Si	A41q
181	A6D5	300	1.2	25	60		175A	Si	A41q
182	A6D9	300	1.2	25	60		175A	Si	A41q
183	B6D1	300	1.2	25	60		175A	Si	A1rx
184	B6D5	300	1.2	25	60		175A	Si	A1rx
185	B6D9	300	1.2	25	60		175A	Si	A1rx
186	B125C1000	300	1.2	40A	50	10m	150	Si	C204
187	K6D5	300	1.2	50	60		150C	Si	
188	ERC04-04	400	1.2		100		140J	Si	A21b
189	A6E1	400	1.2	25	60		175A	Si	A41q
190	A6E5	400	1.2	25	60		175A	Si	A41q
191	A6E9	400	1.2	25	60		175A	Si	A41q
192	B6E1	400	1.2	25	60		175A	Si	A1rx
193	B6E5	400	1.2	25	60		175A	Si	A1rx
194	B6E9	400	1.2	25	60		175A	Si	A1rx
195	DS0.9-04A	400	1.2	45A	70 §	10m	150J	Si	M841
196	K6E5	400	1.2	50	60		150C	Si	
197	MR-1	400	1.2	50A	100	10m	140J	SiΔ	A284a
198	BYW95B	400	1.2	55A	50	10m	165J	Si	A333d
199	1S1887A	400	1.2	60A	100	10m	150J	Si	DO15
200	A6F1	500	1.2	25	60		175A	Si	A41q
201	A6F5	500	1.2	25	60		175A	Si	A41q
202	A6F9	500	1.2	25	60		175A	Si	A41q
203	B6F1	500	1.2	25	60		175A	Si	A1rx
204	B6F5	500	1.2	25	60		175A	Si	A1rx
205	B6F9	500	1.2	25	60		175A	Si	A1rx
206	K6F5	500	1.2	50	60		150C	Si	
207	ERC04-06	600	1.2		100		140J	Si	A21b
208	A6G1	600	1.2	25	60		175A	Si	A41q
209	A6G5	600	1.2	25	60		175A	Si	A41q
210	A6G9	600	1.2	25	60		175A	Si	A41q
211	B6G1	600	1.2	25	60		175A	Si	A1rx
212	B6G5	600	1.2	25	60		175A	Si	A1rx
213	B6G9	600	1.2	25	60		175A	Si	A1rx
214	B250C1000	600	1.2	40A	50	10m	150	Si	C204
215	K6G5	600	1.2	50	60		150C	Si	
216	RA-2	600	1.2	50A	100	10m	130J	SiΔ	A364
217	RM2	600	1.2	50	100	10m	130	SiΔ	A344l
218	RM2A	600	1.2	50J	100	10m	130S	Si	A344l
219	RO2	600	1.2	50	80	10m	130	SiΔ	A344l
220	BYW95C	600	1.2	55A	50	10m	165J	Si	A333d

SYMBOLS AND CODES EXPLAINED IN INTERPRETER

5. GENERAL-PURPOSE RECTIFIERS - $I_0 \geq 1$ A (Cont'd)

IN ORDER OF: (1) IO MAX (2) PIV
(3) * TEMP & (4) TYPE NMBER

LINE No.	4 TYPE NUMBER	2 PIV (V)	MAX AVG FWD DC CURRENT 1 Io MAX (A)	3 @ TEMP (°C)	MAX RATING SURGE CURR PEAK 1 Cy (A)	PULSE WIDTH (s)	MAX. TEMP (°C)	MAT	DRAWING No.
1	1S1890	600	1.2	65A	60		175J	Si	A56b
2	RM2B	600	1.2	90	100	10m		Si	A344l
3	A6H1	700	1.2	25	60		175A	Si	A41q
4	A6H5	700	1.2	25	60		175A	Si	A41q
5	A6H9	700	1.2	25	60		175A	Si	A41q
6	B6H1	700	1.2	25	60		175A	Si	A1rx
7	B6H5	700	1.2	25	60		175A	Si	A1rx
8	B6H9	700	1.2	25	60		175A	Si	A1rx
9	K6H5	700	1.2	50	60		150C	Si	
10	A6K1	800	1.2	25	60		175A	Si	A41q
11	A6K5	800	1.2	25	60		175A	Si	A41q
12	A6K9	800	1.2	25	60		175A	Si	A41q
13	B6K1	800	1.2	25	60		175A	Si	A1rx
14	B6K5	800	1.2	25	60		175A	Si	A1rx
15	B6K9	800	1.2	25	60		175A	Si	A1rx
16	DS0.9-08A	800	1.2	45A	70	10m	150J	Si	
17	EC080	800	1.2	50A	75	8.0m	150A	Si△	A3aa
18	K6K5	800	1.2	50	60		150C	Si	
19	RO2A	800	1.2	50	80	10m	130	Si△	A344l
20	RO2B	800	1.2	50J	80	10m	130S	Si	A344h
21	BYW96D	800	1.2	55A	50	10m	165J	Si	A333d
22	1S1891	800	1.2	65A	60		175J	Si	A56b
23	B380C1000	900	1.2	40A	50	10m	150	Si	C204
24	F11	100	1.25	25A	30	10m	150J	Si	DO13
25	UT249	100	1.25	25A	20	8.3m	175A	Si	A380
26	SSiB0110	150	1.25	45A	50	10m	180J	Si△	A31v
27	F21	200	1.25	25A	30	10m	150J	Si	DO13
28	UT242	200	1.25	25A	20	8.3m	175A	Si	A380
29	SSiB0120	300	1.25	45A	50	10m	180J	Si△	A31v
30	F41	400	1.25	25A	30	10m	150J	Si	DO13
31	UT244	400	1.25	25A	20	8.3m	175A	Si	A380
32	UT245	500	1.25	25A	20	8.3m	175A	Si	A380
33	F61	600	1.25	25A	30	10m	150J	Si	DO13
34	UT247	600	1.25	25A	20	8.3m	175A	Si	A380
35	SSiB0140	600	1.25	45A	50	10m	180J	Si△	A31v
36	F81	800	1.25	25A	30	10m	150J	Si	DO4
37	UT362	800	1.25	25A	20	8.3m	175A	Si	A380
38	SSiB0160	900	1.25	45A	50	10m	180J	Si△	A31v
39	SSiC1560A	900	1.25	45A	75	10m	150J	Si△	A41n
40	SKE1/01	120	1.3	45A	58	10m	160J	Si	M746a
41	GM-1Z	200	1.3	40	35	10m	175J	Si	A333
42	SR1G4	200	1.3	90L	42	8.3m	175J	Si	A360
43	V03C	300 %	1.3	90L	40	10m	175J	Si	A94z
44	GM-1	400	1.3	40	35	10m	175J	Si	A333
45	SKE1/04	400	1.3	45A	50	10m	160J	Si	M746a
46	SR1G8	400	1.3	90L	42	8.3m	175J	Si	A360
47	V07E	400	1.3	90L	40	10m	175J	Si	A333
48	V03E	500 %	1.3	90L	40	10m	175J	Si	A94z
49	GM-1A	600	1.3	40	35	10m	175J	Si	A333
50	SR1G12	600	1.3	90L	42	8.3m	175J	Si	A360
51	V07G	600	1.3	90L	40	10m	175J	Si	A333
52	ERB16-08	800	1.3		40		165J	Si	A333
53	GM-1B	800	1.3	40	35	10m	175J	Si	A333
54	SKE1/08	800	1.3	45A	50	10m	160J	Si	M746a
55	SR1G16	800	1.3	90L	42	8.3m	175J	Si	A360
56	V03G	800 %	1.3	90L	40	10m	175J	Si	A94z
57	V07J	800	1.3	90L	40	10m	175J	Si	A333
58	S6003HE	600	1.35	55A	20		150	Si	M1312
59	S8003HE	800	1.35	55A	20		150	Si	M1312
60	SKS1/01	120	1.4	45A	100	10m	160J	Si	M746a
61	BYX22-200	200	1.4	30A	40	10m	150A	Si	A19c
62	BYX22-400	400	1.4	30A	40	10m	150A	Si	A19c
63	SKS1/04	400	1.4	45A	100	10m	160J	Si	M746a
64	BYX22-600	600	1.4	30A	40	10m	150A	Si	A19c
65	BYX22-800	800	1.4	30A	40	10m	150A	Si	A19c
66	SKS1/08	800	1.4	45A	100	10m	160J	Si	M746a
67	TAV	15	1.5	75A	30	8.3m	175A	Si	A298ap
68	TA3	30	1.5	75A	30	8.3m	175A	Si	A298ap
69	RB150Z	50	1.5		40		140S	Si	M979
70	1N1907	50 *	1.5	25A	30	16m	250	Si△	A86
71	1N2216	50	1.5	25$	20		150	Si△	DO4
72	1N2217	50	1.5	25$	20		150	Si△	S35
73	A7A1	50	1.5	25	60		175A	Si	A41q
74	A7A5	50	1.5	25	60		175A	Si	A41q
75	A7A9	50	1.5	25	60		175A	Si	A41q
76	B7A1	50	1.5	25	60		175A	Si	A1rx
77	B7A5	50	1.5	25	60		175A	Si	A1rx
78	B7A9	50	1.5	25	60		175A	Si	A1rx
79	M1A1	50	1.5	25	250		175A	Si	A1ep
80	M1A5	50	1.5	25	250		175A	Si	A1ep
81	M1A9	50	1.5	25	250		175A	Si	A1ep
82	RB-150	50	1.5	25A	40	10m	140J	Si△	M979
83	SI05	50	1.5	25A	80		150C	Si	A1bc
84	W005F	50	1.5	25	50	10m	150	Si	C204
85	WO-005	50	1.5	25A	50	10m	150A	Si	C207
86	ZS270	50	1.5	25A	70 §		150A	Si	A52f
87	1N4816	50	1.5	40	50		170	Si	DO27
88	CTNRB151	50	1.5	50A	50		125A	Si	C208a *
89	CTPRB151	50	1.5	50A	50		125A	Si	C208a *
90	HER151	50	1.5	50A	50		175A	Si	DO15
91	K7A5	50	1.5	50	60		150C	Si	
92	P100A	50	1.5	50A	50	8.0m	175	Si	DO27
93	RL151	50	1.5	50C	60		175A	Si	DO15
94▼	S1.5-050	50	1.5	50	50		175J	Si	u5f
95	1N2390	50	1.5	55A	35		150A	Si	A32
96	1N2399	50	1.5	55A	35		150A	Si	C8
97	1N2408	50	1.5	55A	35		150A	Si	C9
98	1N2417	50	1.5	55A	35		150A	Si	F8
99	FR151G	50	1.5	55A	55		175A	Si	DO15
100	J05G	50	1.5	55A	60		175A	Si	DO15
101	NSS3058A	50	1.5	55C	35			Si	C190b
102	RL151G	50	1.5	55A	60		175A	Si	DO15
103	CTM20R	50	1.5	60	100	10m	140S	Si	
104	CTM20S	50	1.5	60	100	10m	140S	Si	M824
105	BY188G	50	1.5	65A	30		175J	Si	A313
106	BY588	50	1.5	65A	25		175J	Si	A313
107♦	1N5391	50	1.5	70C	60		170C	Si	DO15
108▼	1N5391G	50	1.5	70A	50	8.3m	175A	Si	DO15
109	AE1A	50	1.5	75A	60	8.0m	175A	Si	DO15
110	CTP50	50	1.5	75	50	10m	175A	Si	M594a*
111	J05	50	1.5	75A	60	8.0m	175A	Si	DO15
112	TA5	50	1.5	75A	30	8.3m	175A	Si	A298ap
113	1N1052	50	1.5	100A	60 §	4.0m	150A	Si	A167v
114	KD208A	100	1.5				85A	Si△	A392
115	RB151Z	100	1.5		40		140S	Si	M979
116	1N1908	100 *	1.5	25A	30	16m	250	Si△	A86
117	1N2289	100	1.5	25$	20		150	Si△	S35
118	1N2289A	100	1.5	25$	20		150	Si△	DO4
119	1N2290A	100	1.5	25$	20		150	Si△	DO4
120	1N2638	100	1.5	25A	15	8.3m	165A	Si	M124
121	150R1B	100	1.5	25	60		175	Si	
122	A7B1	100	1.5	25	60		175A	Si	A41q
123	A7B5	100	1.5	25	60		175A	Si	A41q
124	A7B9	100	1.5	25	60		175A	Si	A41q
125	B7B1	100	1.5	25	60		175A	Si	A1rx
126	B7B5	100	1.5	25	60		175A	Si	A1rx
127	B7B9	100	1.5	25	60		175A	Si	A1rx
128	M1B1	100	1.5	25	250		175A	Si	A1ep
129	M1B5	100	1.5	25	250		175A	Si	A1ep
130	M1B9	100	1.5	25	250		175A	Si	A1ep
131	RB-151	100	1.5	25A	40	10m	140J	Si△	M979
132	SI1	100	1.5	25A	80		150C	Si	A1ty
133	UT251	100	1.5	25A	25	8.3m	175A	Si	A380
134	W01F	100	1.5	25	50	10m	150	Si	C204
135	WO-01	100	1.5	25A	50	10m	150A	Si	C207
136	ZS271	100	1.5	25A	70 §		150A	Si	A52f
137	1N4817	100	1.5	40	50		170	Si	DO27
138	1S2148	100	1.5	40	50	10m	120J	Si	1 †
139	CTNRB152	100	1.5	50A	50		125A	Si	C208a *
140	CTPRB152	100	1.5	50A	50		125A	Si	C208a *
141	HER152	100	1.5	50A	50		175A	Si	DO15
142	K7B5	100	1.5	50	60		150C	Si	
143	MI151R	100	1.5	50	50	10m	130S	Si	M853
144	MI-151	100	1.5	50A	50	10m	130J	Si	M853⊠
145	P100B	100	1.5	50A	50	8.0m	175	Si	DO27
146	RL152	100	1.5	50C	60		175A	Si	DO15
147▼	S1.5-100	100	1.5	50	50		175J	Si	u5f
148	1N1563	100	1.5	55A	70	8.3m	175A	Si△	C12
149	1N1563A	100	1.5	55A	70	8.3m	175A	Si△	C12
150	1N2391	100	1.5	55A	35		150A	Si	A32
151	1N2400	100	1.5	55A	35		150A	Si	C8
152	1N2409	100	1.5	55A	35		150A	Si	C9
153	1N2418	100	1.5	55A	35		150A	Si	F8
154	FR152G	100	1.5	55A	55		175A	Si	DO15
155	J1G	100	1.5	55A	60		175A	Si	DO15
156	NSS3059A	100	1.5	55C	35			Si	C190b
157	RL152G	100	1.5	55A	60		175A	Si	DO15
158	CTM21R	100	1.5	60	100	10m	140S	Si	
159	CTM21S	100	1.5	60	100	10m	140S	Si	
160	DSB15B	100	1.5	60A	100		150J	Si△	A1abf
161♦	1N5392	100	1.5	70C	60		170C	Si	DO15
162▼	1N5392G	100	1.5	70A	50	8.3m	175A	Si	DO15
163	1N2847	100	1.5	75C	15		165A	Si*	S35
164	AE1B	100	1.5	75A	60	8.0m	175A	Si	DO15
165	CTP100	100	1.5	75	50	10m	175A	Si	M594a*
166	J1	100	1.5	75A	60	8.0m	175A	Si	DO15
167	TA10	100	1.5	75A	30	8.3m	175A	Si	A298ap
168	VB100	100	1.5	75	50	10m	175A	Si	M594b*
169	GSA15B	100	1.5	80	75		175J	Si△	A249f
170	1N1115	100	1.5	85C	15		170A	Si	DO4
171	1N1053	100	1.5	100A	60 §	4.0m	150A	Si	A167v
172	1N1085	100	1.5	100A	60 §	4.0m	150A	Si	F22h
173	1N1450	100	1.5	100C			190J	Si	S41a
174	1N1617	100	1.5	100A	100	4.0m	100A	Si	A52
175	1R5BZ61	100	1.5	100A	75	10m	175J	Si	A109e
176	1N1446	100	1.5	120C			175J	Si	S41b
177	1N1054	150	1.5	100A	60 §	4.0m	150A	Si	A167v
178	ERC01-02	200	1.5		130		140J	Si	A424
179	ERC04-02F	200	1.5		100		140J	Si	A21b
180	RB152Z	200	1.5		40		140S	Si	M979
181	1N1909	200 *	1.5	25A	30	16m	250	Si△	A86
182	1N2291	200	1.5	25	100		150	Si△	S35
183	1N2641	200	1.5	25A	15	8.3m	165A	Si	M124
184	150R2B	200	1.5	25	60		175	Si	
185	A7C1	200	1.5	25	60		175A	Si	A41q
186	A7C5	200	1.5	25	60		175A	Si	A41q
187	A7C9	200	1.5	25	60		175A	Si	A41q
188	B7C1	200	1.5	25	60		175A	Si	A1rx
189	B7C5	200	1.5	25	60		175A	Si	A1rx
190	B7C9	200	1.5	25	60		175A	Si	A1rx
191	DS150A	200	1.5	25A	100	10m	120J	Si△	A3av
192	M1C1	200	1.5	25	250		175A	Si	A1ep
193	M1C5	200	1.5	25	250		175A	Si	A1ep
194	M1C9	200	1.5	25	250		175A	Si	A1ep
195	RB-152	200	1.5	25A	40	10m	140J	Si△	M979
196	SI2	200	1.5	25A	80		150C	Si	A1ty
197	UT252	200	1.5	25A	25	8.3m	175A	Si	A380
198	W02F	200	1.5	25	50	10m	150	Si	C204
199	WO-02	200	1.5	25A	50	10m	150A	Si	C207
200	ZS272	200	1.5	25A	70 §		150A	Si	A52f
201	1N4818	200	1.5	40	50		170	Si	DO27
202	1S2149	200	1.5	40	50	10m	120J	Si	1 †
203	SM1.5-02	200	1.5	40A	60	10m	125J	Si	A277d
204	CTNRB153	200	1.5	50A	50		125A	Si	C208a *
205	CTPRB153	200	1.5	50A	50		125A	Si	C208a *
206	HER153	200	1.5	50A	50		175A	Si	DO15
207	K7C5	200	1.5	50	60		150C	Si	
208	MI152R	200	1.5	50	50	10m	130S	Si	M853
209	MI-152	200	1.5	50A	50	10m	130J	Si	M853⊠
210	P100D	200	1.5	50A	50	8.0m	175	Si	DO27
211	RL153	200	1.5	50C	60		175A	Si	DO15
212▼	S1.5-200	200	1.5	50	50		175J	Si	u5f
213	1N1564	200	1.5	55A	70	8.3m	175A	Si△	C12
214	1N1564A	200	1.5	55A	70	8.3m	175A	Si△	C12
215	1N2392	200	1.5	55A	35		150A	Si	A32
216	1N2401	200	1.5	55A	35		150A	Si	C8
217	1N2410	200	1.5	55A	35		150A	Si	C9
218	1N2419	200	1.5	55A	35		150A	Si	F8
219	AGP15-200	200	1.5	55A	50	8.3m	175A	Si	DO15
220	FR153G	200	1.5	55A	55		175A	Si	DO15

SYMBOLS AND CODES
EXPLAINED IN INTERPRETER

5. GENERAL-PURPOSE RECTIFIERS - $I_O \geq 1$ A (Cont'd)

IN ORDER OF: (1) IO MAX (2) PIV
(3) ° TEMP & (4) TYPE NMBER

LINE No.	4 TYPE NUMBER	2 PIV (V)	MAX AVG FWD DC CURRENT 1 Io MAX (A)	3 @ TEMP (°C)	MAX RATING SURGE CURR PEAK 1 Cy (A)	PULSE WIDTH (s)	MAX. TEMP (°C)	MAT	DRAWING No.
1	J2G	200	1.5	55A	60		175A	Si	DO15
2	NSS3060A	200	1.5	55C	35			Si	C190b
3	RL153G	200	1.5	55A	60		175A	Si	DO15
4	CTM22R	200	1.5	60	100	10m	140S	Si	
5	CTM22S	200	1.5	60	100	10m	140S	Si	
6	DSB15C	200	1.5	60A	100		150J	SiΔ	A1abf
7	SA-2Z	200	1.5	60A	100	10m	140J	Si	A268
8♦	1N5393	200	1.5	70C	60		170C	Si	DO15
9▼	1N5393G	200	1.5	70A	50	8.3m	175A	Si	DO15
10♦	MR5059	200	1.5	70L	50		175J	Si	DO15
11	1N2848	200	1.5	75C	15		165A	Si*	S35
12	AE1C	200	1.5	75A	60	8.0m	175A	Si	DO15
13	CTP200	200	1.5	75	50	10m	175A	Si	M594a*
14	J2	200	1.5	75A	60	8.0m	175A	Si	DO15
15	TA20	200	1.5	75A	30	8.3m	175A	Si	A298ap
16	VB200	200	1.5	75	50	10m	175A	Si	M594b*
17	GSA15C	200	1.5	80	75		175J	SiΔ	A249f
18	1N1116	200	1.5	85C	15		170A	Si	DO4
19	1N1055	200	1.5	100A	60 §	4.0m	150A	Si	A167v
20	1N1086	200	1.5	100A	60 §	4.0m	150A	Si	F22h
21	1N1451	200	1.5	100C			190J	Si	S41a
22	1N1618	200	1.5	100A	100	4.0m	100A	Si	A52
23	1R5DZ61	200	1.5	100A	75	10m	175J	Si	A109e
24	1N1447	200	1.5	120C			175J	Si	S41b
25	D1.5/200	200	1.5	120A	50 §	10m	175J	Si§	A249k
26	DA1.5/200	200	1.5	120A	50 §	10m	175J	Si§	A249k
27	1N1910	300 *	1.5	25A	30	16m	250	SiΔ	A86
28	1N2291A	300	1.5	25$	20		150	SiΔ	DO4
29	1N2292	300	1.5	25	100		150	SiΔ	S35
30	1N2292A	300	1.5	25$	20		150	SiΔ	DO4
31	1N2644	300	1.5	25A	15	8.3m	165A	Si	M124
32	150R3B	300	1.5	25	60		175	Si	
33	A7D1	300	1.5	25	60		175A	Si	A41q
34	A7D5	300	1.5	25	60		175A	Si	A41q
35	A7D9	300	1.5	25	60		175A	Si	A41q
36	B7D1	300	1.5	25	60		175A	Si	A1rx
37	B7D5	300	1.5	25	60		175A	Si	A1rx
38	B7D9	300	1.5	25	60		175A	Si	A1rx
39	M1D1	300	1.5	25	250		175A	Si	A1ep
40	M1D5	300	1.5	25	250		175A	Si	A1ep
41	M1D9	300	1.5	25	250		175A	Si	A1ep
42	PS2345	300	1.5	25A			175A	Si	M22
43	SI3	300	1.5	25A	80		150C	Si	A1ty
44	1N4819	300	1.5	40	50		170	Si	DO27
45	HER154	300	1.5	50A	50		175A	Si	DO15
46	K7D5	300	1.5	50	60		150C	Si	
47	1N1565	300	1.5	55A	70	8.3m	175A	SiΔ	C12
48	1N1565A	300	1.5	55A	70	8.3m	175A	SiΔ	C12
49	1N2393	300	1.5	55A	35		150A	Si	A32
50	1N2402	300	1.5	55A	35		150A	Si	C8
51	1N2411	300	1.5	55A	35		150A	Si	C9
52	1N2420	300	1.5	55A	35		150A	Si	F8
53	NSS3061A	300	1.5	55C	35			Si	C190b
54♦	1N5394	300	1.5	70C	60		170C	Si	DO15
55▼	1N5394G	300	1.5	70A	50	8.3m	175A	Si	DO15
56	1N2849	300	1.5	75C	15		165A	Si*	S35
57	CTP300	300	1.5	75	50	10m	175A	Si	M594a*
58	TA30	300	1.5	75A	30	8.3m	175A	Si	A298ap
59	1N1117	300	1.5	85C	15		170A	Si	DO4
60	1N1056	300	1.5	100A	60 §	4.0m	150A	Si	A167v
61	1N1087	300	1.5	100A	60 §	4.0m	150A	Si	F22h
62	1N1452	300	1.5	100C			190J	Si	S41a
63	1N1619	300	1.5	100A	100	4.0m	100A	Si	A52
64	1N1448	300	1.5	120C			175J	Si	S41b
65	ERC01-04	400	1.5		130		140J	Si	A424
66	ERC04-04F	400	1.5		100		140J	Si	A21b
67	RB154Z	400	1.5		40		140S	Si	M979
68	1N1911	400 *	1.5	25A	30	16m	250	SiΔ	A86
69	1N2293	400	1.5	25	100		150	SiΔ	S35
70	1N2293A	400	1.5	25$	20		150	SiΔ	DO4
71	1N2647	400	1.5	25A	15	8.3m	165A	Si	M124
72	150R4B	400	1.5	25	60		175	Si	
73	A7E1	400	1.5	25	60		175A	Si	A41q
74	A7E5	400	1.5	25	60		175A	Si	A41q
75	A7E9	400	1.5	25	60		175A	Si	A41q
76	B7E1	400	1.5	25	60		175A	Si	A1rx
77	B7E5	400	1.5	25	60		175A	Si	A1rx
78	B7E9	400	1.5	25	60		175A	Si	A1rx
79	DS150B	400	1.5	25A	100	10m	120J	SiΔ	A3av
80	M1E1	400	1.5	25	250		175A	Si	A1ep
81	M1E5	400	1.5	25	250		175A	Si	A1ep
82	M1E9	400	1.5	25	250		175A	Si	A1ep
83	RB-154	400	1.5	25A	40	10m	140J	SiΔ	M979
84	SI4	400	1.5	25A	80		150C	Si	A1ty
85	UT254	400	1.5	25A	25	8.3m	175A	Si	A380
86	W04F	400	1.5	25	50	10m	150	Si	C204
87	WO-04	400	1.5	25A	50	10m	150A	Si	C207
88	ZS274	400	1.5	25A	70 §		150A	Si	A52f
89	1N4820	400	1.5	40	50		170	Si	DO27
90	SM1.5-04	400	1.5	40A	60	10m	125J	Si	A277d
91	CTNRB154	400	1.5	50A	50		125A	Si	C208a *
92	CTPRB154	400	1.5	50A	50		125A	Si	C208a *
93	HER155	400	1.5	50A	50		175A	Si	DO15
94	K7E5	400	1.5	50	60		150C	Si	
95	MI154R	400	1.5	50	50	10m	130S	Si	M853
96	MI-154	400	1.5	50A	50	10m	130J	Si	M853☑
97	P100G	400	1.5	50A	50	8.0m	175	Si	DO27
98	RL154	400	1.5	50C	60		175A	Si	DO15
99▼	S1.5-400	400	1.5	50	50		175J	Si	u5f
100	1N1566	400	1.5	55A	70	8.3m	175A	SiΔ	C12
101	1N1566A	400	1.5	55A	70	8.3m	175A	SiΔ	C12
102	1N2394	400	1.5	55A	35		150A	Si	A32
103	1N2403	400	1.5	55A	35		150A	Si	C8
104	1N2412	400	1.5	55A	35		150A	Si	C9
105	1N2421	400	1.5	55A	35		150A	Si	F8
106	AGP15-400	400	1.5	55A	50	8.3m	175A	Si	DO15
107	FR154G	400	1.5	55A	55		175A	Si	DO15
108	J4G	400	1.5	55A	60		175A	Si	DO15
109	NSS3062A	400	1.5	55C	35			Si	C190b
110	RL154G	400	1.5	55A	60		175A	Si	DO15
111	CTM24R	400	1.5	60	100	10m	140S	Si	
112	CTM24S	400	1.5	60	100	10m	140S	Si	
113	DSB15E	400	1.5	60A	100		150J	SiΔ	A1abf
114	SA-2	400	1.5	60A	100	10m	140J	Si	A268
115♦	1N5395	400	1.5	70C	60		170C	Si	DO15
116▼	1N5395G	400	1.5	70A	50	8.3m	175A	Si	DO15
117	1N5395GP	400	1.5	70A	50	8.3m	175A	Si	DO15
118♦	MR5060	400	1.5	70L	50		175J	Si	DO15
119	1N2850	400	1.5	75C	15		165A	Si*	S35
120	AE1D	400	1.5	75A	60	8.0m	175A	Si	DO15
121	J4	400	1.5	75A	60	8.0m	175A	Si	DO15
122	TA40	400	1.5	75A	30	8.3m	175A	Si	A298ap
123	VB400	400	1.5	75	50	10m	175A	Si	M594b*
124	GSA15E	400	1.5	80	75		175J	SiΔ	A249f
125	1N1118	400	1.5	85C	15		170A	Si	DO4
126	1N1057	400	1.5	100A	60 §	4.0m	150A	Si	A167v
127	1N1088	400	1.5	100A	60 §	4.0m	150A	Si	F22h
128	1N1453	400	1.5	100C			190J	Si	S41a
129	1N1620	400	1.5	100A	100	4.0m	100A	Si	A52
130	1R5GZ61	400	1.5	100A	75	10m	175J	Si	A109e
131	1N1449	400	1.5	120C			175J	Si	S41b
132	D1.5/400	400	1.5	120A	50 §	10m	175J	Si§	A249k
133	DA1.5/400	400	1.5	120A	50 §	10m	175J	Si§	A249k
134	1N1912	500 *	1.5	25A	30	16m	250	SiΔ	A86
135	1N2218	500	1.5	25$	20		150	SiΔ	DO4
136	1N2219	500	1.5	25$	20		150	SiΔ	S35
137	150R5B	500	1.5	25	60		175	Si	
138	A7F1	500	1.5	25	60		175A	Si	A41q
139	A7F5	500	1.5	25	60		175A	Si	A41q
140	A7F9	500	1.5	25	60		175A	Si	A41q
141	B7F1	500	1.5	25	60		175A	Si	A1rx
142	B7F5	500	1.5	25	60		175A	Si	A1rx
143	B7F9	500	1.5	25	60		175A	Si	A1rx
144	M1F1	500	1.5	25	250		175A	Si	A1ep
145	M1F5	500	1.5	25	250		175A	Si	A1ep
146	M1F9	500	1.5	25	250		175A	Si	A1ep
147	SI5	500	1.5	25A	80		150C	Si	A1ty
148	UT255	500	1.5	25A	25	8.3m	175A	Si	A380
149	1N4821	500	1.5	40	50		170	Si	DO27
150	1N2851	500	1.5	50C	15		150A	Si*	S35
151	K7F5	500	1.5	50	60		150C	Si	
152	1N1567	500	1.5	55C	70	8.3m	175A	SiΔ	C12
153	1N2395	500	1.5	55A	35		150A	Si	A32
154	1N2404	500	1.5	55A	35		150A	Si	C8
155	1N2413	500	1.5	55A	35		150A	Si	C9
156	1N2422	500	1.5	55A	35		150A	SiΔ	F8
157	NSS3063A	500	1.5	55C	35			Si	C190b
158	SB-2	500	1.5	60A	100	10m	150J	Si	A268
159	UF-3	500	1.5	60A	80	10m	140J	Si	A331
160	1N1119	500	1.5	70C	15		155A	Si	DO4
161♦	1N5396	500	1.5	70C	60		170C	Si	DO15
162▼	1N5396G	500	1.5	70A	50	8.3m	175A	Si	DO15
163	1N5396GP	500	1.5	70A	50	8.3m	175A	Si	DO15
164	CTP500	500	1.5	75	50	10m	175A	Si	M594a*
165	TA50	500	1.5	75A	30	8.3m	175A	Si	A298ap
166	50J1	500	1.5	100A	100		150C	Si	A52
167	1N3667	500	1.5	120J	30	8.3m	190J	Si	S41c
168	ERC01-06	600	1.5		130		140J	Si	A424
169	RB156Z	600	1.5		40		140S	Si	M979
170	1N1913	600 *	1.5	25A	30	16m	250	SiΔ	A86
171	1N2220	600	1.5	25$	20		150	SiΔ	DO4
172	1N2221	600	1.5	25$	20		150	SiΔ	S35
173	1N2650	600	1.5	25A	15	8.3m	165A	Si	M125
174	150R6B	600	1.5	25	60		175	Si	
175	A7G1	600	1.5	25	60		175A	Si	A41q
176	A7G5	600	1.5	25	60		175A	Si	A41q
177	A7G9	600	1.5	25	60		175A	Si	A41q
178	B7G1	600	1.5	25	60		175A	Si	A1rx
179	B7G5	600	1.5	25	60		175A	Si	A1rx
180	B7G9	600	1.5	25	60		175A	Si	A1rx
181	DS150C	600	1.5	25A	100	10m	120J	SiΔ	A3av
182	M1G1	600	1.5	25	250		175A	Si	A1ep
183	M1G5	600	1.5	25	250		175A	Si	A1ep
184	M1G9	600	1.5	25	250		175A	Si	A1ep
185	PS2346	600	1.5	25A			175A	Si	M22
186	RB-156	600	1.5	25A	40	10m	140J	SiΔ	M979
187	SI6	600	1.5	25A	80		150C	Si	A1ty
188	UT257	600	1.5	25A	25	8.3m	175A	Si	A380
189	W06F	600	1.5	25	50	10m	150	Si	C204
190	WO-06	600	1.5	25A	50		150A	Si	C207
191	ZS276	600	1.5	25A	70 §		150A	Si	A52f
192	1N4822	600	1.5	40	50		170	Si	DO27
193	1N2852	600	1.5	50C	15		150A	Si*	S35
194	CTNRB155	600	1.5	50A	50		125A	Si	C208a *
195	CTPRB155	600	1.5	50A	50		125A	Si	C208a *
196	K7G5	600	1.5	50	60		150C	Si	
197	MI156R	600	1.5	50	50	10m	130S	Si	M853
198	MI-156	600	1.5	50	50	10m	130S	Si	M853☑
199	P100J	600	1.5	50A	50	8.0m	175	Si	DO27
200	RL155	600	1.5	50C	60		175A	Si	DO15
201▼	S1.5-600	600	1.5	50	50		175J	Si	u5f
202	1N1568	600	1.5	55C	70	8.3m	175A	SiΔ	C12
203	1N2396	600	1.5	55A	35		150A	SiΔ	A32
204	1N2405	600	1.5	55A	35		150A	SiΔ	C8
205	1N2414	600	1.5	55A	35		150A	SiΔ	C9
206	1N2423	600	1.5	55A	35		150A	SiΔ	F8
207	AGP15-600	600	1.5	55A	50	8.3m	175A	Si	DO15
208	BYX45-600R	600	1.5	55A	40	10m	150J	Si	DO1
209	FR155G	600	1.5	55A	55		175A	Si	DO15
210	J6G	600	1.5	55A	60		175A	Si	DO15
211	NSS3064A	600	1.5	55C	35			Si	C190b
212	RL155G	600	1.5	55A	60		175A	Si	DO15
213	CTM26R	600	1.5	60	100	10m	140S	Si	
214	CTM26S	600	1.5	60	100	10m	140S	Si	
215	DSB15G	600	1.5	60A	100		150J	SiΔ	A1abf
216	SA-2A	600	1.5	60A	100	10m	140J	Si	A268
217	1S2233	600	1.5	65A	100	10m	175J	Si	A56a
218	1N1120	600	1.5	70C	15		155A	Si	DO4
219♦	1N5397	600	1.5	70C	60		170C	Si	DO15
220▼	1N5397G	600	1.5	70A	50	8.3m	175A	Si	DO15

SYMBOLS AND CODES EXPLAINED IN INTERPRETER

5. GENERAL-PURPOSE RECTIFIERS - $I_O \geq 1$ A (Cont'd)

IN ORDER OF: (1) IO MAX (2) PIV (3) ° TEMP & (4) TYPE NMBER

LINE No.	4 TYPE NUMBER	2 PIV (V)	MAX AVG FWD DC CURRENT 1 Io MAX (A)	3 @ TEMP (°C)	MAX RATING SURGE CURR PEAK 1 Cy (A)	PULSE WIDTH (s)	MAX. TEMP (°C)	MAT	DRAWING No.
1	1N5397GP	600	1.5	70A	50	8.3m	175A	Si	DO15
2♦	MR5061	600	1.5	70L	50		175J	Si	DO15
3	AE1E	600	1.5	75A	60	8.0m	175A	Si	DO15
4	CTP600	600	1.5	75	50	10m	175A	Si	M594a*
5	J6	600	1.5	75A	60	8.0m	175A	Si	DO15
6	TA60	600	1.5	75A	30	8.3m	175A	Si	A298ap
7	VB600	600	1.5	75	50	10m	175A	Si	M594b*
8	GSA15G	600	1.5	80	75		175J	Si△	A249f
9	1R5JZ61	600	1.5	100A	75	10m	175J	Si	A109e
10	60J1	600	1.5	100A	100		150C	Si	A52
11	60LA	600	1.5	100	100	4.0m	100A	Si	F42
12	D1.5/600	600	1.5	120A	50 §	10m	175J	Si§	A249k
13	DA1.5/600	600	1.5	120A	50 §	10m	175J	Si§	A249k
14	SI7	700	1.5		80			Si	A1ty
15	1N1914	700 *	1.5	25A	30	16m	250	Si△	A86
16	150R7B	700	1.5	25	60		175	Si	
17	A7H1	700	1.5	25	60		175A	Si	A41q
18	A7H5	700	1.5	25	60		175A	Si	A41q
19	A7H9	700	1.5	25	60		175A	Si	A41q
20	B7H1	700	1.5	25	60		175A	Si	A1rx
21	B7H5	700	1.5	25	60		175A	Si	A1rx
22	B7H9	700	1.5	25	60		175A	Si	A1rx
23	M1H1	700	1.5	25	250		175A	Si	A1ep
24	M1H5	700	1.5	25	250		175A	Si	A1ep
25	M1H9	700	1.5	25	250		175A	Si	A1ep
26	1N5052	700	1.5	40A	50 §		170A	Si	A3an
27	384P	700	1.5	40A	50	8.3m	170A	Si△	DO15
28	K7H5	700	1.5	50	60		150C	Si	
29	1N2397	700	1.5	55A	35		150A	Si△	A32
30	1N2406	700	1.5	55A	35		150A	Si△	C8
31	1N2415	700	1.5	55A	35		150A	Si△	C9
32	1N2424	700	1.5	55A	35		150A	Si△	F8
33	RB158Z	800	1.5		40		140S	Si	M979
34	1AS027	800	1.5	25	125	10m	150A	Si	DO1
35	1N1915	800	1.5	25A	30		250	Si	DO13
36	1N2653	800	1.5	25A	15	8.3m	165A	Si	M125
37	150R8B	800	1.5	25	60		175	Si	
38	A7K1	800	1.5	25	60		175A	Si	A41q
39	A7K5	800	1.5	25	60		175A	Si	A41q
40	A7K9	800	1.5	25	60		175A	Si	A41q
41	B7K1	800	1.5	25	60		175A	Si	A1rx
42	B7K5	800	1.5	25	60		175A	Si	A1rx
43	B7K9	800	1.5	25	60		175A	Si	A1rx
44	M1K1	800	1.5	25	250		175A	Si	A1ep
45	M1K5	800	1.5	25	250		175A	Si	A1ep
46	M1K9	800	1.5	25	250		175A	Si	A1ep
47	RB158	800	1.5	25	40	10m	140S	Si	M979
48	SI8	800	1.5	25A	80		150C	Si	A1ty
49	UT258	800	1.5	25A	25	8.3m	175A	Si	A380
50	W08F	800	1.5	25	50	10m	150	Si	C204
51	WO-08	800	1.5	25A	50		150A	Si	C207
52	ZS278	800	1.5	25A	70 §		150A	Si	A52f
53	1N5053	800	1.5	40A	50 §		170A	Si	A3an
54	SM1.5-08	800	1.5	40A	60	10m	125J	Si	A277d
55	CTNRB156	800	1.5	50A	50		125A	Si	C208a *
56	CTPRB156	800	1.5	50A	50		125A	Si	C208a *
57	K7K5	800	1.5	50	60		150C	Si	
58	P100K	800	1.5	50A	50	8.0m	175	Si	DO27
59	RL156	800	1.5	50C	60		175A	Si	DO15
60▼	S1.5-800	800	1.5	50	50		175J	Si	u5f
61	1N2398	800	1.5	55A	35		150A	Si△	A32
62	1N2407	800	1.5	55A	35		150A	Si△	C8
63	1N2416	800	1.5	55A	35		150A	Si△	C9
64	1N2425	800	1.5	55A	35		150A	Si△	F8
65	AGP15-800	800	1.5	55A	50	8.3m	175A	Si	DO15
66	BYX45-800R	800	1.5	55A	40	10m	150J	Si	DO1
67	FR156G	800	1.5	55A	55		175A	Si	DO15
68	J8G	800	1.5	55A	60		175A	Si	DO15
69	NSS3065A	800	1.5	55C	35			Si	C190b
70	RL156G	800	1.5	55A	60		175A	Si	DO15
71	SA-2B	800	1.5	60A	100	10m	140J	Si	A268
72	1S1888H	800	1.5	65A	60	10m	150J	Si	A1jw
73	1S2234	800	1.5	65A	100	10m	175J	Si	A56a
74♦	1N5398	800	1.5	70C	60		170C	Si	DO15
75▼	1N5398G	800	1.5	70A	50	8.3m	175A	Si	DO15
76	1N5398GP	800	1.5	70A	50	8.3m	175A	Si	DO15
77	AE1F	800	1.5	75A	60	8.0m	175A	Si	DO15
78	J8	800	1.5	75A	60	8.0m	175A	Si	DO15
79	TA80	800	1.5	75A	30	8.3m	175A	Si	A298ap
80	D1.5/800	800	1.5	120A	50 §	10m	175J	Si§	A249k
81	DA1.5/800	800	1.5	120A	50 §	10m	175J	Si§	A249k
82	SI9	900	1.5		80			Si	A1ty
83	1N1916	900	1.5	25	30		250	Si	DO13
84	150R9B	900	1.5	25	60		175	Si	
85	359V	900	1.5	40A	50	8.3m	170A	Si△	DO27
86	384V	900	1.5	40A	50	8.3m	170A	Si△	DO15
87	SSiC1660A	900	1.5	45A	75	10m	150J	Si△	A230
88▼	S1.5-1000	1.0k	1.5	50	50		175J	Si	u5f
89▼	S1.5-1200	1.2k	1.5	50	50		175J	Si	u5f
90	S78	40	1.6	25$	20			Si	S11
91	1N1227B	50	1.6	50$	30			Si	S25a
92	1N1217	50	1.6	135C	20		175J	Si	DO1
93	1N1227	50	1.6	135C	20		175J	Si	S25
94	1N1227A	50	1.6	135C	20		175J	Si	S25
95	1N1217B	50	1.6	140C	25		175S	Si	DO1
96	1N1537	50	1.6	140C	20		175J	Si	DO4
97	1N1217A	50	1.6	175J	20		175J	Si	DO1
98	S91B	100	1.6	25$	25			Si	A54
99	B40C1500R	100	1.6	40A	80	10m	150	Si	C204
100	1N1228B	100	1.6	50$	30			Si	S25a
101	GFB30B	100	1.6	60	60		150J	Si△	A249j
102	1N1218	100	1.6	135C	20		175J	Si	DO1
103	1N1228	100	1.6	135C	20		175J	Si	S25
104	1N1218B	100	1.6	140C	25		175$	Si	DO1
105	1N1228A	100	1.6	140C	20		175J	Si	S25
106	1N1538	100	1.6	140C	20		175J	Si	DO4
107	1N1218A	100	1.6	175J	20		175J	Si	DO1
108	SSiC0810	150	1.6	45A	100	10m	180J	Si△	A31v
109	1N1229B	150	1.6	50$	30			Si	S25a
110	1N1219	150	1.6	135C	20		175J	Si	DO1
111	1N1229	150	1.6	135C	20		175J	Si	S25
112	1N1219B	150	1.6	140C	25		175S	Si	DO1
113	1N1229A	150	1.6	140C	20		175J	Si	S25
114	1N1539	150	1.6	140C	20		175J	Si	DO4
115	1N1219A	150	1.6	175J	20		175J	Si	DO1
116	B80C1500R	200	1.6	40A	80	10m	150	Si	C204
117	1N1230B	200	1.6	50$	30			Si	S25a
118	GFB30C	200	1.6	60	60		150J	Si△	A249j
119	1N1220	200	1.6	135C	20		175J	Si	DO1
120	1N1230	200	1.6	135C	20		175J	Si	S25
121	1N1220B	200	1.6	140C	25		175$	Si	DO1
122	1N1230A	200	1.6	140C	20		175J	Si	S25
123	1N1540	200	1.6	140C	20		175J	Si	DO4
124	1N1220A	200	1.6	175J	20		175J	Si	DO1
125	B125C1500R	300	1.6	40A	80	10m	150	Si	C204
126	SSiC0820	300	1.6	45A	100	10m	180J	Si△	A31v
127	1N1231B	300	1.6	50$	30			Si	S25a
128	1N1221	300	1.6	135C	20		175J	Si	DO1
129	1N1231	300	1.6	135C	20		175J	Si	S25
130	1N1221B	300	1.6	140C	25		175$	Si	DO1
131	1N1231A	300	1.6	140C	20		175J	Si	S25
132	1N1541	300	1.6	140C	20		175J	Si	DO4
133	1N1221A	300	1.6	175J	20		175J	Si	DO1
134	1N1232B	400	1.6	50$	30			Si	S25a
135	GFB30E	400	1.6	60	60		150J	Si△	A249j
136	1N1222	400	1.6	135C	20		175J	Si	DO1
137	1N1232	400	1.6	135C	20		175J	Si	S25
138	1N1222B	400	1.6	140C	25		175$	Si	DO1
139	1N1232A	400	1.6	140C	20		175J	Si	S25
140	1N1542	400	1.6	140C	20		175J	Si	DO4
141	1N1222A	400	1.6	175J	20		175J	Si	DO1
142	1N1233B	500	1.6	50$	30			Si	S25a
143	1N1223	500	1.6	135C	20		175J	Si	DO1
144	1N1233	500	1.6	135C	20		175J	Si	S25
145	1N1223B	500	1.6	140C	25		175$	Si	DO1
146	1N1233A	500	1.6	140C	20		175J	Si	S25
147	1N1543	500	1.6	140C	20		175J	Si	DO4
148	1N1223A	500	1.6	175J	20		175J	Si	DO1
149	B250C1500R	600	1.6	40A	80	10m	150	Si	C204
150	SSiC0840	600	1.6	45A	100	10m	180J	Si△	A31v
151	1N1234B	600	1.6	50$	30			Si	S25a
152	GFB30G	600	1.6	60	60		150J	Si△	A249j
153	1N1224	600	1.6	135C	20		175J	Si	DO1
154	1N1234	600	1.6	135C	20		175J	Si	S25
155	1N1224B	600	1.6	140C	25		175$	Si	DO1
156	1N1234A	600	1.6	140C	20		175J	Si	S25
157	1N1544	600	1.6	140C	20		175J	Si	DO4
158	1N1224A	600	1.6	175J	20		175J	Si	DO1
159	1N1235A	700	1.6	50$	30			Si	S25a
160	1N1235B	700	1.6	50$	30			Si	S25a
161	1N1225	700	1.6	135C	20		175J	Si	DO1
162	1N1235	700	1.6	135C	20		175J	Si	S25
163	1N1225B	700	1.6	140C	25		175$	Si	DO1
164	1N1236A	800	1.6	50$	30			Si	S25a
165	1N1236B	800	1.6	50$	30			Si	S25a
166	1N1226	800	1.6	135C	20		175J	Si	DO1
167	1N1236	800	1.6	135C	20		175J	Si	S25
168	1N1226B	800	1.6	140C	25		175$	Si	DO1
169	B380C1500R	900	1.6	40A	80	10m	150	Si	C204
170	SSiC0860	900	1.6	45A	100	10m	180J	Si△	A31v
171	BYS22-45	45	1.7	25A	100		125J	Si	A1abj
172	S2V10	100	1.7		6.0	8.3m	150J	Si†	
173	DSA17B	100	1.7	40	60		150J	Si△	A249f
174	20E1	100	1.7	50A	100	10m	150J	Si	A1aaV
175	DSA17C	200	1.7	40	60		150J	Si△	A249f
176	20E2	200	1.7	50A	100	10m	150J	Si	A1aaV
177	DSA17E	400	1.7	40	60		150J	Si△	A249f
178	DS1.2-04A	400	1.7	45A	75 §	10m	180J	Si	A9p
179	20E4	400	1.7	50A	100	10m	150J	Si	A1aaV
180	20E6	600	1.7	43A	80	10m	150J	Si	A1aaV
181	20E8	800	1.7	43A	80	10m	150J	Si	A1aaV
182	DS1.2-08A	800	1.7	45A	75	10m	150J	Si	
183	ERC01-02F	200	1.8		130		140J	Si	A424
184	ERC01-04F	400	1.8		130		140J	Si	A424
185	DS2-04A	400	1.8	45A	120 §	10m	180J	Si	A9q
186	DS2-08A	800	1.8	45A	120	10m	180J	Si	
187	SSiC1120	300	1.9	45A	100	10m	180J	Si△	A230
188	SSiC1140	600	1.9	45A	100	10m	180J	Si△	A230
189	SSiC1760	900	1.9		80	10m	150J	Si	A1bp
190	SSiC1160	900	1.9	45A	100	10m	180J	Si△	A230

$I_O \geq 2$ A

LINE No.	TYPE NUMBER	PIV (V)	Io MAX (A)	TEMP (°C)	PEAK 1 Cy (A)	PULSE WIDTH (s)	MAX. TEMP (°C)	MAT	DRAWING No.
194	1N3565	6.0	2.0		6.0	1.0	125S	Si	DO4
195	2A30	30	2.0	50A	200	8.0m	175A	Si	A3t
196	F799-0G	50	2.0		50			Si	M117g
197	NS2000	50	2.0		200	8.3m		Si	DO27
198	R205	50	2.0		50		200J	Si	DO1
199	1N2109	50 *	2.0	25			200	Si△	S82
200	M2A1	50	2.0	25	250		175A	Si	A1ep
201	M2A5	50	2.0	25	250		175A	Si	A1ep
202	M2A9	50	2.0	25	250		175A	Si	A1ep
203	UR205Ø	50	2.0	25A	25	8.3m	175A	Si	A380
204	UT2005	50	2.0	25A	60	8.3m	175A	Si	A380a
205	1S2408	50	2.0	40A	150 §	8.3m	150J	Si△	A1fn
206	1S2415	50	2.0	40A	150 §	8.3m	150J	Si△	A279
207	2A50	50	2.0	50A	200	8.0m	175A	Si	A3t
208	B8A5	50	2.0	50	90	8.3m	175A	Si	A1rx
209	B172-5	50	2.0	50	60		150C	Si	
210	DD3520	50	2.0	50A	50		150	Si△	M1018Ø
211	DD3520A	50	2.0	50A	50	10m	150A	Si△	M1018
212	FR201	50	2.0	50A	70		175A	Si	DO15
213	K8A5	50	2.0	50	60		150C	Si	
214	RL201	50	2.0	50A	70		175A	Si	DO15
215	SI05A	50	2.0	50A	80	10m	150C	Si	A1bc
216	EGP20A	50	2.0	55	75	8.3m	150	$	DO15
217	FE2A	50	2.0	55	50	8.3m	175	$	DO204A
218	FR201G	50	2.0	55A	65		175A	Si	DO15
219	MDA200	50	2.0	55A	60		165J	Si	M999
220	RL201G	50	2.0	75A	70		175A	Si	DO15

SYMBOLS AND CODES EXPLAINED IN INTERPRETER

5. GENERAL-PURPOSE RECTIFIERS - $I_O \geq 2$ A (Cont'd)

IN ORDER OF: (1) IO MAX (2) PIV (3) ° TEMP & (4) TYPE NMBER

LINE No.	4 TYPE NUMBER	2 PIV (V)	MAX AVG FWD DC CURRENT 1 Io MAX (A)	3 @ TEMP (°C)	MAX RATING SURGE CURR PEAK 1 Cy (A)	PULSE WIDTH (s)	MAX. TEMP (°C)	MAT	DRAWING No.
1	SGI5001	50	2.0	75C	35	8.3m	175J	Si	DO204A
2	SRS205	50	2.0	75	65	8.3m	175A	Si	A340
3	20D05	50	2.0	100L	50	8.3m	170J	Si	DO39
4	BYS22-90	90	2.0	25A	60		125J	Si	A1abj
5	2G1	100	2.0		50			Si	A313j
6	F799-1G	100	2.0		50			Si	M117g
7	NS2001	100	2.0		200	8.3m		Si	DO27
8	R210	100	2.0		50		200J	Si	DO1
9	200R1B	100	2.0	25	60		175	Si	
10	F12	100	2.0	25A	70	10m	175J	Si	DO13
11	M2B1	100	2.0	25	250		175A	Si	A1ep
12	M2B5	100	2.0	25	250		175A	Si	A1ep
13	M2B9	100	2.0	25	250		175A	Si	A1ep
14	UR210Ø	100	2.0	25A	25	8.3m	175A	Si	A380
15	UT261	100	2.0	25A	30	8.3m	175A	Si	A380
16	UT2010	100	2.0	25A	60	8.3m	175A	Si	A380a
17	1S2409	100	2.0	40A	150 §	8.3m	150J	SiΔ	A1fn
18	1S2416	100	2.0	40A	150 §	8.3m	150J	SiΔ	A279
19	BY296	100	2.0	45	70	10m	150J	SiΔ	DO13
20	1B2C1	100	2.0	50A	60	10m	150J	Si	C190
21	1B2Z1	100	2.0	50A	60	10m	150J	Si	C190
22	2A100	100	2.0	50A	200	8.0m	175A	Si	A3t
23	20C1#B	100	2.0	50A	30	100m	175A	Si	A86
24	B8B5	100	2.0	50	90	8.3m	175A	Si	A1rx
25	B172-10	100	2.0	50	60		150C	Si	
26	FR202	100	2.0	50A	70		175A	Si	DO15
27	K8B5	100	2.0	50	60		150C	Si	
28	RL202	100	2.0	50A	70		175A	Si	DO15
29	SI1A	100	2.0	50A	80	10m	150C	Si	A1bc
30	EGP20B	100	2.0	55	75	8.3m	150	$	DO15
31	FE2B	100	2.0	55	50	8.3m	175	$	DO204A
32	FR202G	100	2.0	55A	65		175A	Si	DO15
33	MDA201	100	2.0	55A	60		165J	Si	M999
34	SRS210	100	2.0	55A	65		175A	Si	A340
35	RL202G	100	2.0	75A	70		175A	Si	DO15
36	SGI5002	100	2.0	75C	35	8.3m	175J	Si	DO204A
37	1N1085A	100	2.0	100A	100	4.0m	100A	Si	F42
38	20D1	100	2.0	100L	50	8.3m	170J	Si	DO39
39	UR215Ø	150	2.0	25A	25	8.3m	175A	Si	A380
40	EGP20C	150	2.0	55	75	8.3m	150	$	DO15
41	FE2C	150	2.0	55	50	8.3m	175	$	DO204A
42	SGI5003	150	2.0	75C	35	8.3m	175J	Si	DO204A
43	F799-2G	200	2.0		50			Si	M117g
44	NS2002	200	2.0		200	8.3m		Si	DO27
45	R220	200	2.0		50		200J	Si	DO1
46	1N3938	200	2.0	25A	60	1.0m	175A	SiΔ	DO13
47	200R2B	200	2.0	25	60		175	Si	
48	DD3573	200	2.0	25A	50		125	SiΔ	M1018Ø
49	DD3573A	200	2.0	25A	50	10m	125A	SiΔ	M1018
50	F22	200	2.0	25A	70	10m	175J	Si	DO13
51	M2C1	200	2.0	25	250		175A	Si	A1ep
52	M2C5	200	2.0	25	250		175A	Si	A1ep
53	M2C9	200	2.0	25	250		175A	Si	A1ep
54	UR220Ø	200	2.0	25A	25	8.3m	175A	Si	A380
55	UT262	200	2.0	25A	30	8.3m	175A	Si	A380
56	UT2020	200	2.0	25A	60	8.3m	175A	Si	A380a
57	1S2410	200	2.0	40A	150 §	8.3m	150J	SiΔ	A1fn
58	1S2417	200	2.0	40A	150 §	8.3m	150J	SiΔ	A279
59	BY297	200	2.0	45	70	10m	150J	SiΔ	DO13
60	1D2C1	200	2.0	50A	60	10m	150J	Si	C190
61	1D2Z1	200	2.0	50A	60	10m	150J	Si	C190
62	2A200	200	2.0	50A	200	8.0m	175A	Si	A3t
63	2G2	200	2.0	50A	50	8.3m	175A	Si	A313j
64	20C2#B	200	2.0	50A	30	100m	175A	Si	A86
65	B8C5	200	2.0	50	90	8.3m	175A	Si	A1rx
66	B172-20	200	2.0	50	60		150C	Si	
67	FR203	200	2.0	50A	70		175A	Si	DO15
68	K8C5	200	2.0	50	60		150C	Si	
69	RL203	200	2.0	50A	70		175A	Si	DO15
70	SI2A	200	2.0	50A	80	10m	150C	Si	A1bc
71	EGP20D	200	2.0	55	75	8.3m	150	$	DO15
72	FE2D	200	2.0	55	50	8.3m	175	$	DO204A
73	FR203G	200	2.0	55A	65		175A	Si	DO15
74	MDA202	200	2.0	55A	60		165J	Si	M999
75	SRS220	200	2.0	55A	65		175A	Si	A340
76	RL203G	200	2.0	75A	70		175A	Si	DO15
77	SGI5004	200	2.0	75C	35	8.3m	175J	Si	DO204A
78	1N1086A	200	2.0	100A	100	4.0m	100A	Si	F42
79	20D2	200	2.0	100L	50	8.3m	170J	Si	DO39
80	UR225Ø	250	2.0	25A	25	8.3m	175A	Si	A380
81	F799-3G	300	2.0		50			Si	M117g
82	NS2003	300	2.0		200	8.3m		Si	DO27
83	200R3B	300	2.0	25	60		175	Si	
84	M2D1	300	2.0	25	250		175A	Si	A1ep
85	M2D5	300	2.0	25	250		175A	Si	A1ep
86	M2D9	300	2.0	25	250		175A	Si	A1ep
87	1S2411	300	2.0	40A	150 §	8.3m	150J	SiΔ	A1fn
88	1S2418	300	2.0	40A	150 §	8.3m	150J	SiΔ	A279
89	2A300	300	2.0	50A	200	8.0m	175A	Si	A3t
90	B8D5	300	2.0	50	90	8.3m	175A	Si	A1rx
91	B172-30	300	2.0	50	60		150C	Si	
92	K8D5	300	2.0	50	60		150C	Si	
93	SI3A	300	2.0	50A	80	10m	150C	Si	A1bc
94	1N1087A	300	2.0	100A	100	4.0m	100A	Si	F42
95	F799-4G	400	2.0		50			Si	M117g
96	NS2004	400	2.0		200	8.3m		Si	DO27
97	1N3939	400	2.0	25A	60	1.0m	175A	SiΔ	DO13
98	200R4B	400	2.0	25	60		175	Si	
99	F42	400	2.0	25A	70	10m	175J	Si	DO13
100	F42Z	400	2.0	25A	70	10m	175J	Si	DO13
101	M2E1	400	2.0	25	250		175A	Si	A1ep
102	M2E5	400	2.0	25	250		175A	Si	A1ep
103	M2E9	400	2.0	25	250		175A	Si	A1ep
104	TG24	400	2.0	25A	60		140J	Si	A1aau
105	UT264	400	2.0	25A	30	8.3m	175A	Si	A380
106	UT2040	400	2.0	25A	60	8.3m	175A	Si	A380a
107	1S2412	400	2.0	40A	150 §	8.3m	150J	SiΔ	A1fn
108	1S2419	400	2.0	40A	150 §	8.3m	150J	SiΔ	A279
109	BY298	400	2.0	45	70	10m	150J	SiΔ	DO13
110	1G2C1	400	2.0	50A	60	10m	150J	Si	C190
111	1G2Z1	400	2.0	50A	60	10m	150J	Si	C190
112	2A400	400	2.0	50A	200	8.0m	175A	Si	A3t
113	2G4	400	2.0	50A	50	8.3m	175A	Si	A313j
114	20C4#B	400	2.0	50A	30	100m	175A	Si	A86
115	B8E5	400	2.0	50	90	8.3m	175A	Si	A1rx
116	B172-40	400	2.0	50	60		150C	Si	
117	FR204	400	2.0	50A	70		175A	Si	DO15
118	K8E5	400	2.0	50	60		150C	Si	
119	RBB154	400	2.0	50C	50		125A	Si	C288a
120	RL204	400	2.0	50A	70		175A	Si	DO15
121	SI4A	400	2.0	50A	80	10m	150C	Si	A1bc
122	FR204G	400	2.0	55A	65		175A	Si	DO15
123	MDA204	400	2.0	55A	60		165J	Si	M999
124	SRS240	400	2.0	55A	65		175A	Si	A340
125	RL204G	400	2.0	75A	70		175A	Si	DO15
126	1N1088A	400	2.0	100A	100	4.0m	100A	Si	F42
127	20D4	400	2.0	100L	50	8.3m	170J	Si	DO39
128	1N5206	440	2.0	25A	25		175A	Si	A146d
129	F799-5G	500	2.0		50			Si	M117g
130	NS2005	500	2.0		200	8.3m		Si	DO27
131	200R5B	500	2.0	25	60		175	Si	
132	M2F1	500	2.0	25	250		175A	Si	A1ep
133	M2F5	500	2.0	25	250		175A	Si	A1ep
134	M2F9	500	2.0	25	250		175A	Si	A1ep
135	UT265	500	2.0	25A	30	8.3m	175A	Si	A380
136	1S2413	500	2.0	40A	150 §	8.3m	150J	SiΔ	A1fn
137	1S2420	500	2.0	40A	150 §	8.3m	150J	SiΔ	A279
138	2A500	500	2.0	50A	200	8.0m	175A	Si	A3t
139	B8F5	500	2.0	50	90	8.3m	175A	Si	A1rx
140	B172-50	500	2.0	50	60		150C	Si	
141	K8F5	500	2.0	50	60		150C	Si	
142	SI5A	500	2.0	50A	80	10m	150C	Si	A1bc
143	50LA	500	2.0	100A	100	4.0m	100A	Si	F42
144	F799-6G	600	2.0		50			Si	M117g
145	NS2006	600	2.0		200	8.3m		Si	DO27
146	1N3940	600	2.0	25A	60	1.0m	175A	SiΔ	DO13
147	200R6B	600	2.0	25	60		175	Si	
148	F62	600	2.0	25A	70	10m	175J	Si	DO13
149	F62Z	600	2.0	25A	70	10m	175J	Si	DO13
150	M2G1	600	2.0	25	250		175A	Si	A1ep
151	M2G5	600	2.0	25	250		175A	Si	A1ep
152	M2G9	600	2.0	25	250		175A	Si	A1ep
153	TG26	600	2.0	25A	60		140J	Si	A1aau
154	UT267	600	2.0	25A	30	8.3m	175A	Si	A380
155	UT2060	600	2.0	25A	60	8.3m	175A	Si	A380a
156	1S2414	600	2.0	40A	150 §	8.3m	150J	SiΔ	A1fn
157	1S2421	600	2.0	40A	150 §	8.3m	150J	SiΔ	A279
158	VS648X	600	2.0	45	35	8.3m		Si	
159	1N5176	600	2.0	50A	200		175A	Si	DO27
160	2A600	600	2.0	50A	200	8.0m	175A	Si	A3t
161	2G6	600	2.0	50A	50	8.3m	175A	Si	A313j
162	20C6#B	600	2.0	50A	30	100m	175A	Si	A86
163	B8G5	600	2.0	50	90	8.3m	175A	Si	A1rx
164	B172-60	600	2.0	50	60		150C	Si	
165	FR205	600	2.0	50A	70		175A	Si	DO15
166	K8G5	600	2.0	50	60		150C	Si	
167	RBB155	600	2.0	50C	50		125A	Si	C288a
168▼	RL205	600	2.0	50A	70	8.3m	175A	Si	DO15
169	RL206	600	2.0	50A	70		175A	Si	DO15
170	SI6A	600	2.0	50A	80	10m	150C	Si	A1bc
171	FR205G	600	2.0	55A	65		175A	Si	DO15
172	MDA206	600	2.0	55A	60		165J	Si	M999
173	SRS260	600	2.0	55A	65		175A	Si	A340
174	RL205G	600	2.0	75A	70		175A	Si	DO15
175	20D6	600	2.0	100L	50	8.3m	170J	Si	DO39
176	NS2007	700	2.0		200	8.3m		Si	DO27
177	200R7B	700	2.0	25	60		175	Si	
178	M2H1	700	2.0	25	250		175A	Si	A1ep
179	M2H5	700	2.0	25	250		175A	Si	A1ep
180	M2H9	700	2.0	25	250		175A	Si	A1ep
181	B8H5	700	2.0	50	90	8.3m	175A	Si	A1rx
182	B172-70	700	2.0	50	60		150C	Si	
183	K8H5	700	2.0	50	60		150C	Si	
184	F799-8G	800	2.0		50			Si	M117g
185	NS2008	800	2.0		200	8.3m		Si	DO27
186	1N3941	800	2.0	25	30		165	Si	DO13
187	200R8B	800	2.0	25	60		175	Si	
188	BY55	800	2.0	25C	50	10m	165J	Si	A249c
189	F82	800	2.0	25A	70	10m	175J	Si	DO13
190	F82Z	800	2.0	25A	70	10m	175J	Si	DO13
191	M2K1	800	2.0	25	250		175A	Si	A1ep
192	M2K5	800	2.0	25	250		175A	Si	A1ep
193	M2K9	800	2.0	25	250		175A	Si	A1ep
194	S08	800	2.0	25	50		150	Si	C217a
195	TG28	800	2.0	25A	60		140J	Si	A1aau
196	UT268	800	2.0	25A	30	8.3m	175A	Si	A380
197	BY299	800	2.0	45	70	10m	150J	SiΔ	DO13
198	2A800	800	2.0	50A	200	8.0m	175A	Si	A3t
199	2G8#B	800	2.0	50A	50	8.3m	175A	Si	A313j
200	B8K5	800	2.0	50	90	8.3m	175A	Si	A1rx
201	B172-80	800	2.0	50	60		150C	Si	
202	FR206	800	2.0	50A	70		175A	Si	DO15
203	K8K5	800	2.0	50	60		150C	Si	
204	RL208	800	2.0	50A	70		175A	Si	DO15
205	SI8A	800	2.0	50A	80	10m	150C	Si	A1bc
206	FR206G	800	2.0	55A	65		175A	Si	DO15
207	MDA208	800	2.0	55A	60		165J	Si	M999
208	SRS280	800	2.0	55A	65		175A	Si	A340
209	RL206G	800	2.0	75A	70		175A	Si	DO15
210	20D8	800	2.0	100L	50	8.3m	170J	Si	DO39
211	200R9B	900	2.0	25	60		175	Si	
212	B172-90	900	2.0	50	60		150C	Si	
213	BY54	600	2.1	25C	50	10m	175J	Si	A249c
214	SSiC1960A	900	2.3	45A	75	10m	150J	SiΔ	A231
215	RL251	50	2.5		150	8.0m	175A	Si	A1aak
216	FR251	50	2.5	25J	150		175A	Si	Alaak
217	M3A1	50	2.5	25	250		175A	Si	A1ep
218	M3A5	50	2.5	25	250		175A	Si	A1ep
219	M3A9	50	2.5	25	250		175A	Si	A1ep
220	FR251G	50	2.5	55A	100		175A	Si	A1aaz

SYMBOLS AND CODES EXPLAINED IN INTERPRETER

5. GENERAL-PURPOSE RECTIFIERS - $I_0 \geq 2$ A (Cont'd)

IN ORDER OF: (1) IO MAX (2) PIV (3) ° TEMP & (4) TYPE NMBER

LINE No.	4 TYPE NUMBER	2 PIV (V)	MAX AVG FWD DC CURRENT 1 Io MAX (A)	3 @ TEMP (°C)	MAX RATING SURGE CURR PEAK 1 Cy (A)	PULSE WIDTH (s)	MAX. TEMP (°C)	MAT	DRAWING No.
1	GP25A	50	2.5	55A	100		175	Si	E201d
2	RL251G	50	2.5	55A	100		175A	Si	A1aaz
3	1N2524	50	2.5	150C	50		150C	Si△	DO10
4	1N2535	50	2.5	150C	50		150C	Si△	DO10
5	1N2546	50	2.5	150C	50		150C	Si△	DO10
6	BY302-75	75	2.5				150J	Si	M882
7	S3VC10	100	2.5		120	8.3m	150J	Si†	
8	250R1B	100	2.5	25	250		175	Si	
9	A14A	100	2.5	25	4.0	8.3m	175J	Si	A94g
10	FR252	100	2.5	25J	150		175A	Si	Alaak
11	M3B1	100	2.5	25	250		175A	Si	A1ep
12	M3B5	100	2.5	25	250		175A	Si	A1ep
13	M3B9	100	2.5	25	250		175A	Si	A1ep
14	M2-100	100	2.5	30A	100		150J	Si	A435
15	M2-100R	100	2.5	30A	100		150J	Si	A435
16	DCA25B	100	2.5	40	120		150J	Si△	C190a*
17	DCB25B	100	2.5	40	120		150J	Si△	C190a*
18	FR252G	100	2.5	55A	100		175A	Si	A1aaz
19	GP25B	100	2.5	55A	100		175	Si	E201d
20	RL252G	100	2.5	55A	100		175A	Si	A1aaz
21	U05B	100	2.5	90L	100	10m	175J	Si	A333b
22	1N2525	100	2.5	150C	50		150C	Si△	DO10
23	1N2536	100	2.5	150C	50		150C	Si△	DO10
24	1N2547	100	2.5	150C	50		150C	Si△	DO10
25	SKE2.5/01	120	2.5	45A	150	10m	150J	Si	M571c
26	BY302-150	150	2.5				150J	Si	M882
27	RL253	200	2.5		150	8.0m	175A	Si	A1aek
28	250R2B	200	2.5	25	250		175	Si	
29	FR253	200	2.5	25J	150		175A	Si	Alaak
30	GM-3Z	200	2.5	25A	80	10m	175J	Si△	A249c
31	M3C1	200	2.5	25	250		175A	Si	A1ep
32	M3C5	200	2.5	25	250		175A	Si	A1ep
33	M3C9	200	2.5	25	250		175A	Si	A1ep
34	M2-200	200	2.5	30A	100		150J	Si	A435
35	M2-200R	200	2.5	30A	100		150J	Si	A435
36	DCA25C	200	2.5	40	120		150J	Si△	C190a*
37	DCB25C	200	2.5	40	120		150J	Si△	C190a*
38	SKN2.5/02	200	2.5	45A	150	10m	180J	Si	S452
39	FR253G	200	2.5	55A	100		175A	Si	A1aaz
40	GP25D	200	2.5	55A	100		175	Si	E201d
41	RL253G	200	2.5	55A	100		175A	Si	A1aaz
42	U05C	200	2.5	90L	100	10m	175J	Si	A333b
43	1N2526	200	2.5	150C	50		150C	Si△	DO10
44	1N2537	200	2.5	150C	50		150C	Si△	DO10
45	1N2548	200	2.5	150C	50		150C	Si△	DO10
46	BY302-225	225	2.5				150J	Si	M882
47	BY302-300	300	2.5				150J	Si	M882
48	250R3B	300	2.5	25	250		175	Si	
49	M3D1	300	2.5	25	250		175A	Si	A1ep
50	M3D5	300	2.5	25	250		175A	Si	A1ep
51	M3D9	300	2.5	25	250		175A	Si	A1ep
52	1N2527	300	2.5	150C	50		150C	Si△	DO10
53	1N2538	300	2.5	150C	50		150C	Si△	DO10
54	1N2549	300	2.5	150C	50		150C	Si△	DO10
55	RL254	400	2.5		150	8.0m	175A	Si	A1aek
56	250R4B	400	2.5	25	250		175	Si	
57	FR254	400	2.5	25J	150		175A	Si	Alaak
58	GM-3	400	2.5	25A	80	10m	175J	Si△	A249c
59	M3E1	400	2.5	25	250		175A	Si	A1ep
60	M3E5	400	2.5	25	250		175A	Si	A1ep
61	M3E9	400	2.5	25	250		175A	Si	A1ep
62	M2-400	400	2.5	30A	100		150J	Si	A435
63	M2-400R	400	2.5	30A	100		150J	Si	A435
64	DCA25E	400	2.5	40	120		150J	Si△	C190a*
65	DCB25E	400	2.5	40	120		150J	Si△	C190a*
66	SKE2.5/04	400	2.5	45A	150	10m	150J	Si	M571c
67	SKN2.5/04	400	2.5	45A	150	10m	180J	Si	S452
68	FR254G	400	2.5	55A	100		175A	Si	A1aaz
69	GP25G	400	2.5	55A	100		175	Si	E201d
70	RL254G	400	2.5	55A	100		175A	Si	A1aaz
71	U05E	400	2.5	90L	100	10m	175J	Si	A333b
72	1N2528	400	2.5	150C	50		150C	Si△	DO10
73	1N2539	400	2.5	150C	50		150C	Si△	DO10
74	1N2550	400	2.5	150C	50		150C	Si△	DO10
75	250R5B	500	2.5	25	250		175	Si	
76	M3F1	500	2.5	25	250		175A	Si	A1ep
77	M3F5	500	2.5	25	250		175A	Si	A1ep
78	M3F9	500	2.5	25	250		175A	Si	A1ep
79	1N2529	500	2.5	150C	50		150C	Si△	DO10
80	1N2540	500	2.5	150C	50		150C	Si△	DO10
81	1N2551	500	2.5	150C	50		150C	Si△	DO10
82	BY246-600	600	2.5		80	10m	175J	Si	A313l
83	ERC16-06	600	2.5		80		175J	Si	A313l
84	RL255	600	2.5		150		175A	Si	A1aak
85	250R6B	600	2.5	25	250		175	Si	
86	FR255	600	2.5	25J	150		175A	Si	Alaak
87	GM-3A	600	2.5	25A	80	10m	175J	Si△	A249c
88	M3G1	600	2.5	25	250		175A	Si	A1ep
89	M3G5	600	2.5	25	250		175A	Si	A1ep
90	M3G9	600	2.5	25	250		175A	Si	A1ep
91	M2-600	600	2.5	30A	100		150J	Si	A435
92	M2-600R	600	2.5	30A	100		150J	Si	A435
93	MZ2-600	600	2.5	30A	100		150J	Si	A435
94	MZ2-600R	600	2.5	30A	100		150J	Si	A435
95	FR255G	600	2.5	55A	100		175A	Si	A1aaz
96	GP25J	600	2.5	55A	100		175	Si	E201d
97	RL255G	600	2.5	55A	100		175A	Si	A1aaz
98	U05G	600	2.5	90L	100	10m	175J	Si	A333b
99	1N2530	600	2.5	150C	50		150C	Si△	DO10
100	1N2541	600	2.5	150C	50		150C	Si△	DO10
101	1N2552	600	2.5	150C	50		150C	Si△	DO10
102	250R7B	700	2.5	25	250		175	Si	
103	M3H1	700	2.5	25	250		175A	Si	A1ep
104	M3H5	700	2.5	25	250		175A	Si	A1ep
105	M3H9	700	2.5	25	250		175A	Si	A1ep
106	1N2531	700	2.5	150C	50		150C	Si△	DO10
107	1N2542	700	2.5	150C	50		150C	Si△	DO10
108	1N2553	700	2.5	150C	50		150C	Si△	DO10
109	BY228	700	2.5	150C	50		150C	Si△	DO4
110	RL256	800	2.5		150		175A	Si	A1aak
111	250R8B	800	2.5	25	250		175	Si	
112	FR256	800	2.5	25J	150		175A	Si	Alaak
113	GM-3B	800	2.5	25A	80	10m	175J	Si△	A249c
114	M3K1	800	2.5	25	250		175A	Si	A1ep
115	M3K5	800	2.5	25	250		175A	Si	A1ep
116	M3K9	800	2.5	25	250		175A	Si	A1ep
117	M2-800	800	2.5	30A	100		150J	Si	A435
118	M2-800R	800	2.5	30A	100		150J	Si	A435
119	MZ2-800	800	2.5	30A	100		150J	Si	A435
120	MZ2-800R	800	2.5	30A	100		150J	Si	A435
121	SKE2.5/08	800	2.5	45A	150	10m	150J	Si	M571c
122	SKN2.5/08	800	2.5	45A	150	10m	180J	Si	S452
123	FR256G	800	2.5	55A	100		175A	Si	A1aaz
124	GP25K	800	2.5	55A	100		175	Si	E201d
125	RL256G	800	2.5	55A	100		175A	Si	A1aaz
126	U05J	800	2.5	90L	100	10m	175J	Si	A333b
127	1N2532	800	2.5	150C	50		150C	Si△	DO10
128	1N2543	800	2.5	150C	50		150C	Si△	DO10
129	1N2554	800	2.5	150C	50		150C	Si△	DO10
130	250R9B	900	2.5	25	250		175	Si	
131	1N2533	900	2.5	150C	50		150C	Si△	DO10
132	1N2544	900	2.5	150C	50		150C	Si△	DO10
133	1N2555	900	2.5	150C	50		150C	Si△	DO10
134	DBA40B	100	2.6	40	80		150J	Si△	
135	DSA26B	100	2.6	40	120		150J	Si△	A249f
136	S3V10	100	2.6	40A	120		150J	Si	A344k
137	DBA40C	200	2.6	40	80		150J	Si△	
138	DSA26C	200	2.6	40	120		150J	Si△	A249f
139	S3V20	200	2.6	40A	120		150J	Si	A344k
140	DSA26E	400	2.6	40	120		150J	Si△	A249f
141	S3V40	400	2.6	40A	120		150J	Si	A344k
142	GM3Y	100	2.7	40J	80	10m	175S	Si	A249c
143	SUES1104	200	2.75	75L	60	8.3m	175	Si	A1ty
144	SUES1105	300	2.75	75L	60	8.3m	175	Si	A1ty
145	SUES1106	400	2.75	75L	60	8.3m	175	Si	A1ty
146	1N3354	10	3.0	55C	30	8.3m	200C	Si	S505
147	1S441	12	3.0	100	11	.20m	150A	Si	S4a⊘
148	3A15	15	3.0	50A	300	8.3m	175A	Si	A1eq
149	1N3355	15	3.0	55C	30	8.3m	200C	Si	S505
150	SSH3A020	20	3.0		150			Si	A1ey
151	MBR320P	20	3.0	95L	80	16m	150J	Si△	A1aas
152	1S442	20	3.0	100	5.9	.20m	150A	Si	S4a⊘
153	1N3356	25	3.0	55C	30	8.3m	200C	Si	S505
154	A15U	25	3.0	70	75	8.3m	175J	Si	A249
155	SSH3A030	30	3.0		150			Si	A1ey
156	3A30	30	3.0	50A	300	8.3m	175A	Si	A1eq
157	MBR330P	30	3.0	95L	80	16m	150J	Si△	A1aas
158	MBR335M	35	3.0		500		125J	Si	
159	SSH3A040	40	3.0		150			Si	A1ey
160	MBR340P	40	3.0	95L	80	16m	150J	Si△	A1aas
161	BYS26	45	3.0	120	126	8.3m	150J	Si	A424
162	BYS26-45	45	3.0	120C	120		125J	Si	A1abk
163	KD202A	50	3.0				130C	Si△	S477
164	MR910	50	3.0		100		175J	Si	A282⊘
165	NS3000	50	3.0		300	8.3m		Si	A1eq
166	SDR3001	50	3.0		75			Si#	DO4
167	SSH3A050	50	3.0		150			Si	A1ey
168	M4A1	50	3.0	25	250		175A	Si	A1ep
169	M4A5	50	3.0	25	250		175A	Si	A1ep
170	M4A9	50	3.0	25	250		175A	Si	A1ep
171	SL6305HE	50	3.0	25A	60		150	Si	M1244
172	SRS305	50	3.0	25	125	8.3m	175A	Si	A340a
173	UT3005	50	3.0	25A	80	8.3m	175A	Si	A380a
174	1N4997	50	3.0	40A	300 §		175A	Si	M176a
175	V330	50	3.0	40A	100	8.3m	150J	Si	A1zz
176	V350	50	3.0	40A	200	8.3m	150J	Si	A1zz
177	1N2348	50	3.0	50C	15		150A	Si	S19h⊘
178	1N4139	50	3.0	50A	300	8.3m	175A	Si	A1vm
179	3A50	50	3.0	50A	50	8.0m	150	Si	A1eq
180	3A50FS	50	3.0	50	50	8.0m	150	Si	A298q
181	3C50	50	3.0	50A	300	8.3m	175A	Si	A3q
182	AS3A	50	3.0	50A	300	8.3m	150A	Si	A1vp
183	HAB005	50	3.0	50	300	8.3m	150A	Si	A1ez
184	HER301	50	3.0	50A	200		175A	Si	DO27
185▼	S3-050	50	3.0	50	200		175J	Si	u5c
186	S3A05	50	3.0	50A	300	8.3m	175C	Si	A1ey
187	VB50	50	3.0	50A	50	10m		Si	M594e
188	1N3357	50	3.0	55C	30	8.3m	200C	Si	S505
189	1N5197	50	3.0	55	300 §	8.3m	175A	Si	A1rv
190	A115F	50	3.0	55	20	8.3m	175J	Si	A249
191	EGP30A	50	3.0	55	125	8.3m	150	$	DO201A
192	FE3A	50	3.0	55	125	8.3m	175	$	A313n
193	FR301G	50	3.0	55A	125		175A	Si	DO27
194	SDA113A	50	3.0	55C	50		125	†	M1158
195	UF5400	50	3.0	55A	150	8.3m	150J	Si	DO201A
196	A15F	50	3.0	70	25	8.3m	175J	Si	A249
197	G4A	50	3.0	70A	125	8.3m	175A	Si	A313n
198	1N4719	50	3.0	75A	300		175A	Si	A179
199▼	1N5400G	50	3.0	75A	200	8.3m	175A	Si	DO27
200	3E05	50	3.0	75A	300	4.0m	175A	Si	A1vk
201	AE3A	50	3.0	75A	300	4.0m	175A	Si	A1vk
202	GI500	50	3.0	95A	100	8.3m	175A	Si	DO201
203	MR500	50	3.0	95A	100		175J	Si	A282
204	P300A	50	3.0	100A	200	8.3m	175	Si	A3ac
205	1N5400	50	3.0	105C	200 §		170C	Si	A3q
206	1S430	50	3.0	125B			150	Si△	A89
207	1N1581	50	3.0	150C			175B	Si	DO4
208	E2A3	50	3.0	150	200		175	Si	DO4
209	SSH3A060	60	3.0		150			Si	A1ey
210	1N3358	75	3.0	55C	30	8.3m	200C	Si	S505
211	SDR3002	80	3.0		75			Si#	DO4
212	BYS26-90	90	3.0	85C	80		125J	Si	A1abk
213	1SM3	100	3.0		80			Si	A3ai
214	3G1	100	3.0		125			Si	A313k
215	KD202V	100	3.0				130C	Si△	S477
216	MR911	100	3.0		100		175J	Si	A282⊘
217	NS3001	100	3.0		300	8.3m		Si	A1eq
218	SDR3003	100	3.0		75			Si#	DO4
219	1N2702	100	3.0	25A	15	8.3m	165A	Si	M125
220	1N2725	100	3.0	25A	15	8.3m	165A	Si	M126a

SYMBOLS AND CODES EXPLAINED IN INTERPRETER

5. GENERAL-PURPOSE RECTIFIERS - $I_0 \geq 2$ A (Cont'd)

IN ORDER OF: (1) IO MAX (2) PIV (3) ° TEMP & (4) TYPE NMBER

LINE No.	4 TYPE NUMBER	2 PIV (V)	MAX AVG FWD DC CURRENT 1 Io MAX (A)	3 @ TEMP (°C)	MAX RATING SURGE CURR PEAK 1 Cy (A)	PULSE WIDTH (s)	MAX. TEMP (°C)	MAT	DRAWING No.
1	1N2750	100	3.0	25A	15	8.3m	165A	Si	M126a
2	300R1B	100	3.0	25	250		175	Si	
3	GU-3SY	100	3.0	25	60	10m	175	Si△	A333b
4	M4B1	100	3.0	25	250		175A	Si	A1ep
5	M4B5	100	3.0	25	250		175A	Si	A1ep
6	M4B9	100	3.0	25	250		175A	Si	A1ep
7	PFR103N	100	3.0	25	75	10m	175J	Si	TO3Ø*
8	PHR103N	100	3.0	25	150	10m	175J	Si	TO3Ø
9	SL6310HE	100	3.0	25A	60		150	Si	M1244
10	UT3010	100	3.0	25A	80	8.3m	175A	Si	A380a
11	1N4998	100	3.0	40A	300 §		175A	Si	M176a
12	V331	100	3.0	40A	100	8.3m	150J	Si	A1zz
13	V351	100	3.0	40A	200	8.3m	150J	Si	A1zz
14	GSA30B	100	3.0	45	100		175J	Si△	A249h
15	1N2349	100	3.0	50C	15		150A	Si	S19hØ
16	1N4140	100	3.0	50A	300	8.3m	175A	Si	A1vm
17	3A100	100	3.0	50A	50	8.0m	150	Si	A1eq
18	3A100FS	100	3.0	50	50	8.0m	150	Si	A298q
19	3C100	100	3.0	50A	300	8.3m	175A	Si	A3q
20	AS3B	100	3.0	50A	300	8.3m	150A	Si	A1vp
21	HAB010	100	3.0	50	300	8.3m	150A	Si	A1ez
22	HER302	100	3.0	50A	200		175A	Si	DO27
23▼	S3-100	100	3.0	50	200		175J	Si	u5c
24	S3A1	100	3.0	50A	300	8.3m	175C	Si	A1ey
25	1N3359	100	3.0	55C	30	8.3m	200C	Si	S505
26	1N5198	100	3.0	55A	300 §	8.3m	175A	Si	A1rv
27	A115A	100	3.0	55	20	8.3m	175J	Si	A249
28	EGP30B	100	3.0	55	125	8.3m	150	$	DO201A
29	FE3B	100	3.0	55	125	8.3m	175	$	A313n
30	FR302G	100	3.0	55A	125		175A	Si	DO27
31	GS13	100	3.0	55A	100	10m	175J	Si	A94m
32	SDA113B	100	3.0	55C	50		125	†	M1158
33	SRS310	100	3.0	55A	125		175A	Si	A340a
34	UF5401	100	3.0	55A	150	8.3m	150J	Si	DO201A
35	30D1	100	3.0	61A	150	10m	150J	Si	A1aax
36	A15A	100	3.0	70	25	8.3m	175J	Si	A249
37	G4B	100	3.0	70A	125	8.3m	175A	Si	A313n
38	1N4720	100	3.0	75A	300		175A	Si	A179aØ
39▼	1N5401G	100	3.0	75A	200	8.3m	175A	Si	DO27
40	3E1	100	3.0	75A	300	4.0m	175A	Si	A1vk
41	AE3B	100	3.0	75A	300	4.0m	175A	Si	A1vk
42	BYW17-100	100	3.0	80A	240	10m	150J	Si	A318
43	3BZ61	100	3.0	95A	100	10m	175J	Si	A109f
44	GI501	100	3.0	95A	100	8.3m	175A	Si	DO201
45	MR501	100	3.0	95A	100		175J	Si	A282
46	HR100	100	3.0	100	300 §	8.0m	150A	Si	A1sm
47	P300B	100	3.0	100A	200	8.3m	175	Si	A3ac
48	1N5401	100	3.0	105C	200 §		170C	Si	A3q
49	1S410	100	3.0	125S	33		150S	Si	S61△
50	1S431	100	3.0	125B			150	Si△	A89
51	1N1582	100	3.0	150C			175B	Si	DO4
52	E2B3	100	3.0	150	200		175	Si	DO4
53	SDR3004	120	3.0		75			Si#	DO4
54	1S446	120	3.0	100	1.5	.20m	150A	Si	S4aØ
55	SDR3005	140	3.0		75			Si#	DO4
56	D303	150	3.0				70A	Ge*	S496
57	SL6315HE	150	3.0	25A	60		150	Si	M1244
58	1N2350	150	3.0	50C	15		150A	Si	S19hØ
59	3CC13	150	3.0	50A	90	10m	150J	Si	S19s
60	3CD13	150	3.0	50A	90	10m	150J	Si	S19s
61	1N3360	150	3.0	55C	30	8.3m	200C	Si	S505
62	EGP30C	150	3.0	55	125	8.3m	150	$	DO201A
63	FE3C	150	3.0	55	125	8.3m	175	$	A313n
64	2SM3	200	3.0		80			Si	A3ai
65	ERD03-02	200	3.0		150		140J	Si	A430
66	KD202D	200	3.0				130C	Si△	S477
67	MR912	200	3.0		100		175J	Si	A282Ø
68	NS3002	200	3.0		300	8.3m		Si	A1eq
69	1N2705	200	3.0	25A	15	8.3m	165A	Si	M125
70	1N2728	200	3.0	25A	15	8.3m	165A	Si	M126a
71	1N2753	200	3.0	25A	15	8.3m	165A	Si	M126a
72	1N3981	200	3.0	25A	30		200A	Si	A60
73	3AF2	200	3.0	25A	150		150C	Si	A3al
74	300R2B	200	3.0	25	250		175	Si	
75	GU-3SZ	200	3.0	25	60	10m	175	Si△	A333b
76	M4C1	200	3.0	25	250		175A	Si	A1ep
77	M4C5	200	3.0	25	250		175A	Si	A1ep
78	M4C9	200	3.0	25	250		175A	Si	A1ep
79	PFR203N	200	3.0	25	75	10m	175J	Si	TO3Ø*
80	PHR203N	200	3.0	25	150	10m	175J	Si	TO3Ø
81	UT3020	200	3.0	25A	80	8.3m	175A	Si	A380a
82	1N4999	200	3.0	40A	300 §		175A	Si	M176a
83	3G2	200	3.0	40A	125	8.3m	175A	Si	A313k
84	SM3-02	200	3.0	40A	125	10m	150J	Si	A437b
85	SM-3-02	200	3.0	40A	125	10m	150J	Si	A437b
86	V322	200	3.0	40A	100	8.3m	150J	Si	A1zz
87	V332	200	3.0	40A	100	8.3m	150J	Si	A1zz
88	V342	200	3.0	40A	200	8.3m	150J	Si	A1zz
89	V352	200	3.0	40A	200	8.3m	150J	Si	A1zz
90	GSA30C	200	3.0	45	100		175J	Si△	A249h
91	1N1124	200	3.0	50A	25 §		150A	Si△	DO4
92	1N4141	200	3.0	50A	300	8.3m	175A	Si	A1vm
93	1S2762	200	3.0	50A	100	10m	175J	Si△	A249a
94	3A200	200	3.0	50A	50	8.0m	150	Si	A1eq
95	3A200FS	200	3.0	50	50	8.0m	150	Si	A298q
96	3C200	200	3.0	50A	300	8.3m	175A	Si	A3q
97	AS3C	200	3.0	50A	300	8.3m	150A	Si	A1vp
98	BY251	200	3.0	50A	100	10m	150J	Si	DO27
99	D3-200	200	3	50L	80	10m	150J	Si	A422
100	HAB020	200	3.0	50	300	8.3m	150A	Si	A1ez
101	HER303	200	3.0	50A	200		175A	Si	DO27
102▼	S3-200	200	3.0	50	200		175J	Si	u5c
103	S3A2	200	3.0	50A	300	8.3m	175C	Si	A1ey
104	1N3361	200	3.0	55C	30	8.3m	200C	Si	S505
105	1N5199	200	3.0	55A	300 §	8.3m	175A	Si	A1rv
106	A115B	200	3.0	55	20	8.3m	175J	Si	A249
107	EGP30D	200	3.0	55	125	8.3m	150	$	DO201A
108	FE3D	200	3.0	55	125	8.3m	175	$	A313n
109	FR303G	200	3.0	55A	125		175A	Si	DO27
110	GS23	200	3.0	55A	100	10m	175J	Si	A94m
111	H115B	200	3.0	55A	110	8.3m	150	Si	A94x
112	SDA113C	200	3.0	55C	50		125	†	M1158
113	SRS320	200	3.0	55A	125		175A	Si	A340a
114	UF5402	200	3.0	55A	150	8.3m	150J	Si	DO201A
115	30D2	200	3.0	61A	150	10m	150J	Si	A1aax
116	G4D	200	3.0	70A	125	8.3m	175A	Si	
117	H15B	200	3.0	70A	100	8.3m	175	Si	A94X
118	1N4721	200	3.0	75A	300		175A	Si	A179aØ
119▼	1N5402G	200	3.0	75A	200	8.3m	175A	Si	DO27
120	3E2	200	3.0	75A	300	4.0m	175A	Si	A1vk
121	AE3C	200	3.0	75A	300	4.0m	175A	Si	A1vk
122	BYW17-200	200	3.0	80A	240	10m	150J	Si	A318
123	3DZ61	200	3.0	95A	100	10m	175J	Si	A109f
124	GI502	200	3.0	95A	100	8.3m	175A	Si	DO201
125	MR502	200	3.0	95A	100		175J	Si	A282
126	S3BR2	200	3.0	95B	50		130J	Si	S81
127	HR200	200	3.0	100	300 §	8.0m	150A	Si	A1sm
128	P300D	200	3.0	100A	200	8.3m	175	Si	A3ac
129	U15B	200 %	3.0	100L	80	10m	175J	Si	A94m
130	1N5402	200	3.0	105C	200 §		170C	Si	A3q
131	DA3/200	200	3.0	120A	80 §	10m	175J	Si§	A249l
132	1S411	200	3.0	125S	33		150S	Si	S61△
133	1S432	200	3.0	125B			150	Si△	A89
134	1N1583	200	3.0	150C			175B	Si	DO4
135	E2C3	200	3.0	150	200		175	Si	DO4
136	E2D3	250	3.0	150	200		175	Si	DO4
137	KD202SZ	300	3.0				130C	Si△	S477
138	NS3003	300	3.0		300	8.3m		Si	A1eq
139	1N2708	300	3.0	25A	15	8.3m	165A	Si	M125
140	1N2731	300	3.0	25A	15	8.3m	165A	Si	M126a
141	1N2756	300	3.0	25A	15	8.3m	165A	Si	M126a
142	3AF4	300	3.0	25A	150		150C	Si	A3al
143	300R3B	300	3.0	25	250		175	Si	
144	M4D1	300	3.0	25	250		175A	Si	A1ep
145	M4D5	300	3.0	25	250		175A	Si	A1ep
146	M4D9	300	3.0	25	250		175A	Si	A1ep
147	SSiC1220	300	3.0	45A	100	10m	180J	Si△	A231
148	1N1125	300	3.0	50A	25 §		150A	Si△	DO4
149	3A300	300	3.0	50A	50	8.0m	150	Si	A1eq
150	3A300FS	300	3.0	50	50	8.0m	150	Si	A298q
151	3C300	300	3.0	50A	300	8.3m	175A	Si	A3q
152	3FC13	300	3.0	50A	90	10m	150J	Si	S19s
153	3FD13	300	3.0	50A	90	10m	150J	Si	S19s
154	HER304	300	3.0	50A	200		175A	Si	DO27
155	S3A3	300	3.0	50A	300	8.3m	175C	Si	A1ey
156	1N3362	300	3.0	55C	30	8.3m	200C	Si	S505
157	A115C	300	3.0	55	20	8.3m	175J	Si	A249
158	H115C	300	3.0	55A	110	8.3m	150	Si	A94x
159	UF5403	300	3.0	55A	150	8.3m	150J	Si	DO201A
160	A15C	300	3.0	70	125	8.3m	175J	Si	A249
161	U15C	300 %	3.0	100L	80	10m	175J	Si	A94m
162	1N5403	300	3.0	105C	200 §		170C	Si	A3q
163	1N1584	300	3.0	150C			175B	Si	DO4
164	E2E3	300	3.0	150	200		175	Si	DO4
165	E2F3	350	3.0	150	200		175	Si	DO4
166	4SM3	400	3.0		80			Si	A3ai
167	ERD03-04	400	3.0		150		140J	Si	A430
168	KD202K	400	3.0				130C	Si△	S477
169	MR914	400	3.0		100		175J	Si	A282Ø
170	NS3004	400	3.0		300	8.3m		Si	A1eq
171	1N2711	400	3.0	25A	15	8.3m	165A	Si	M125
172	1N2734	400	3.0	25A	15	8.3m	165A	Si	M126a
173	1N2759	400	3.0	25A	15	8.3m	165A	Si	M126a
174	1N3982	400	3.0	25A	30		200A	Si	A60
175	300R4B	400	3.0	25	250		175	Si	
176	M4E1	400	3.0	25	250		175A	Si	A1ep
177	M4E5	400	3.0	25	250		175A	Si	A1ep
178	M4E9	400	3.0	25	250		175A	Si	A1ep
179	UT3040	400	3.0	25A	80	8.3m	175A	Si	A380a
180	1N5000	400	3.0	40A	300 §		175A	Si	M176a
181	3G4	400	3.0	40A	125	8.3m	175A	Si	A313k
182	SM3-04	400	3.0	40A	125	10m	150J	Si	A437b
183	SM-3-04	400	3.0	40A	125	10m	150J	Si	A437b
184	V324	400	3.0	40A	100	8.3m	150J	Si	A1zz
185	V334	400	3.0	40A	100	8.3m	150J	Si	A1zz
186	V344	400	3.0	40A	200	8.3m	150J	Si	A1zz
187	V354	400	3.0	40A	200	8.3m	150J	Si	A1zz
188	GSA30E	400	3.0	45	100		175J	Si△	A249h
189	1N1126	400	3.0	50A	25 §		150A	Si△	DO4
190	1N4142	400	3.0	50A	300	8.3m	175A	Si	A1vm
191	1S2764	400	3.0	50A	100	10m	175J	Si△	A249a
192	3A400	400	3.0	50A	50	8.0m	150	Si	A1eq
193	3A400FS	400	3.0	50	50	8.0m	150	Si	A298q
194	3C400	400	3.0	50A	300	8.3m	175A	Si	A3q
195	3GC12	400	3.0	50A	90		150J	Si	S19s
196	AS3D	400	3.0	50A	300	8.3m	150A	Si	A1vp
197	BY252	400	3.0	50A	100	10m	150J	Si	DO27
198	D3-400	400	3	50L	80	10m	150J	Si	A422
199	HAB040	400	3.0	50	300	8.3m	150A	Si	A1ez
200	HER305	400	3.0	50A	200		175A	Si	DO27
201	PF4HZ	400	3.0	50A	100	10m	150J	Si	DO27
202▼	S3-400	400	3.0	50	200		175J	Si	u5c
203	S3A4	400	3.0	50A	300	8.3m	175C	Si	A1ey
204	1N3363	400	3.0	55C	30	8.3m	200C	Si	S505
205	1N5200	400	3.0	55A	300 §	8.3m	175A	Si	A1rv
206	A115D	400	3.0	55	20	8.3m	175J	Si	A249
207	FR304G	400	3.0	55A	125		175A	Si	DO27
208	GS43	400	3.0	55A	100	10m	175J	Si	A94m
209	H115D	400	3.0	55A	110	8.3m	150	Si	A94x
210	SDA113D	400	3.0	55C	50		125	†	M1158
211	SRS340	400	3.0	55A	125		175A	Si	A340a
212	UF5404	400	3.0	55A	150	8.3m	150J	Si	DO201A
213	30D4	400	3.0	61A	150	10m	150J	Si	A1aax
214	G4G	400	3.0	70A	125	8.3m	175A	Si	A313n
215	H15D	400	3.0	70A	100	8.3m	175	Si	A94x
216	1N4722	400	3.0	75A	300		175A	Si	A179aØ
217▼	1N5404G	400	3.0	75A	200	8.3m	175A	Si	DO27
218	3E4	400	3.0	75A	300	4.0m	175A	Si	A1vk
219	AE3D	400	3.0	75A	300	4.0m	175A	Si	A1vk
220	BYW17-400	400	3.0	80A	240	10m	150J	Si	A318

SYMBOLS AND CODES EXPLAINED IN INTERPRETER

5. GENERAL-PURPOSE RECTIFIERS - $I_0 \geq 2$ A (Cont'd)

IN ORDER OF: (1) IO MAX (2) PIV
(3) ° TEMP & (4) TYPE NMBER

LINE No.	4 TYPE NUMBER	2 PIV (V)	MAX AVG FWD DC CURRENT 1 Io MAX (A)	3 @ TEMP (°C)	MAX RATING SURGE CURR PEAK 1 Cy (A)	PULSE WIDTH (s)	MAX. TEMP (°C)	MAT	DRAWING No.
1	BYW18-400	400	3.0	80A	240	10m	150J	Si	A318
2	3GZ61	400	3.0	95A	100	10m	175J	Si	A109f
3	GI504	400	3.0	95A	100	8.3m	175A	Si	DO201
4	MR504	400	3.0	95A	100		175J	Si	A282
5	HR400	400	3.0	100	300 §	8.0m	150A	Si	A1sm
6	P300G	400	3.0	100A	200	8.3m	175	Si	A3ac
7	1N5404	400	3.0	105C	200 §		170C	Si	A3q
8	DA3/400	400	3.0	120A	80 §	10m	175J	Si§	A249l
9	1S413	400	3.0	125S	33		150S	Si	S61Δ
10	1S434	400	3.0	125B			150	SiΔ	A89
11	1N1585	400	3.0	150C			175B	Si	DO4
12	E2G3	400	3.0	150	200		175	Si	DO4
13	KD202M	500	3.0				130C	SiΔ	S477
14	NS3005	500	3.0		300	8.3m		Si	A1eq
15	300R5B	500	3.0	25	250		175	Si	
16	M4F1	500	3.0	25	250		175A	Si	A1ep
17	M4F5	500	3.0	25	250		175A	Si	A1ep
18	M4F9	500	3.0	25	250		175A	Si	A1ep
19	1N1127	500	3.0	50A	25 §		150A	SiΔ	DO4
20	3A500	500	3.0	50A	50	8.0m	150	Si	A1eq
21	3A500FS	500	3.0	50	50	8.0m	150	Si	A298q
22	3C500	500	3.0	50A	300	8.3m	175A	Si	A3q
23	S3A5	500	3.0	50A	300	8.3m	175C	Si	A1ey
24	1N3364	500	3.0	55C	30	8.3m	200C	Si	S505
25	A115E	500	3.0	55	20	8.3m	175J	Si	A249
26	A15E	500	3.0	70	125	8.3m	175J	Si	A249
27	U15E	500 %	3.0	100L	80	10m	175J	Si	A94m
28	1N5405	500	3.0	105C	200 §		170C	Si	A3q
29	1N1586	500	3.0	150C			175B	Si	DO4
30	E2H3	500	3.0	150	200		175	Si	DO4
31	6SM3	600	3.0		80			Si	A3ai
32	KD202R	600	3.0				130C	SiΔ	S477
33	MR916	600	3.0		100		175J	Si	A282Ø
34	NS3006	600	3.0		300	8.3m		Si	A1eq
35	1N2714	600	3.0	25A	15	8.3m	165A	Si	M126a
36	1N2737	600	3.0	25A	15	8.3m	165A	Si	M126d
37	1N2762	600	3.0	25A	15	8.3m	165A	Si	M126d
38	1N3983	600	3.0	25A	30		200A	Si	A60
39	3AF6	600	3.0	25A	150		150C	Si	A3al
40	300R6B	600	3.0	25	250		175	Si	
41	M4G1	600	3.0	25	250		175A	Si	A1ep
42	M4G5	600	3.0	25	250		175A	Si	A1ep
43	M4G9	600	3.0	25	250		175A	Si	A1ep
44	UT3060	600	3.0	25A	80	8.3m	175A	Si	A380a
45	1N5001	600	3.0	40A	300 §		175A	Si	M176a
46	3G6	600	3.0	40A	125	8.3m	175A	Si	A313k
47	SM3-06	600	3.0	40A	125	10m	150J	Si	A437b
48	SM-3-06	600	3.0	40A	125	10m	150J	Si	A437b
49	V326	600	3.0	40A	100	8.3m	150J	Si	A1zz
50	V336	600	3.0	40A	100	8.3m	150J	Si	A1zz
51	V346	600	3.0	40A	200	8.3m	150J	Si	A1zz
52	V356	600	3.0	40A	200	8.3m	150J	Si	A1zz
53	GSA30G	600	3.0	45	100		175J	SiΔ	A249h
54	SSiC1240	600	3.0	45A	100	10m	180J	SiΔ	A231
55	1N1128	600	3.0	50A	25 §		150A	SiΔ	DO4
56	1N4143	600	3.0	50A	300	8.3m	175A	Si	A1vm
57	1S2766	600	3.0	50A	100	10m	175J	SiΔ	A249a
58	1S2766A	600	3.0	50A	100	10m	175J	SiΔ	A249a
59	3A600	600	3.0	50A	50	8.0m	150	Si	A1eq
60	3A600FS	600	3.0	50	50	8.0m	150	Si	A298q
61	3C600	600	3.0	50A	300	8.3m	175A	Si	A3q
62	3JC12	600	3.0	50A	90		150J	Si	S193
63	AS3E	600	3.0	50A	300	8.3m	150A	Si	A1vp
64	BY253	600	3.0	50A	100	10m	150J	Si	DO27
65	D3-600	600	3	50L	80	10m	150J	Si	A422
66	HAB060	600	3.0	50	300	8.3m	150A	Si	A1ez
67	PF6HZ	600	3.0	50A	100	10m	150J	Si	DO27
68▼	S3-600	600	3.0	50	200		175J	Si	u5c
69	S3A6	600	3.0	50A	300	8.3m	175C	Si	A1ey
70	1N3365	600	3.0	55C	30	8.3m	200C	Si	S505
71	1N5201	600	3.0	55A	300 §	8.3m	175A	Si	A1rv
72	A115M	600	3.0	55	20	8.3m	175J	Si	A249
73	FR305G	600	3.0	55A	125		175A	Si	DO27
74	SDA113E	600	3.0	55C	50		125	†	M1158
75	SRS360	600	3.0	55A	125		175A	Si	A340a
76	G4J	600	3.0	70A	125	8.3m	175A	Si	A313n
77	H15M	600	3.0	70A	100	8.3m	175	Si	A94X
78	1N4723	600	3.0	75A	300		175A	Si	A179aØ
79▼	1N5406G	600	3.0	75A	200	8.3m	175A	Si	DO27
80	3E6	600	3.0	75A	300	4.0m	175A	Si	A1vk
81	AE3E	600	3.0	75A	300	4.0m	175A	Si	A1vk
82	BYW17-600	600	3.0	80A	240	10m	150J	Si	A318
83	BYW18-600	600	3.0	80A	240	10m	150J	Si	A318
84	3JZ61	600	3.0	95A	100	10m	175J	Si	A109f
85	GI506	600	3.0	95A	100	8.3m	175A	Si	DO201
86	MR506	600	3.0	95A	100		175J	Si	A282
87	HR600	600	3.0	100	300 §	8.0m	150A	Si	A1sm
88	P300J	600	3.0	100A	200	8.3m	175	Si	A3ac
89	1N5406	600	3.0	105C	200 §		170C	Si	A3q
90	DA3/600	600	3.0	120A	80 §	10m	175J	Si§	A249l
91	1S415	600	3.0	125S	33		150S	Si	S61Δ
92	1S436	600	3.0	125B			150	SiΔ	A89
93	1N1587	600	3.0	150C			175B	Si	DO4
94	E2K3	600	3.0	150	200		175	Si	DO4
95	NS3007	700	3.0		300	8.3m		Si	A1eq
96	S3A7	700	3.0		300			Si	A1ey
97	300R7B	700	3.0	25	250		175	Si	
98	M4H1	700	3.0	25	250		175A	Si	A1ep
99	M4H5	700	3.0	25	250		175A	Si	A1ep
100	M4H9	700	3.0	25	250		175A	Si	A1ep
101	3A700	700	3.0	50	50	8.0m	150	Si	A298q
102	3A700FS	700	3.0	50	50	8.0m	150	Si	A298q
103	398P	700	3.0	50A	200	8.3m	170A	SiΔ	A3ad
104	1N3366	700	3.0	55C	30	8.3m	200C	Si	S505
105	S57	700	3.0	80$	20			Si	S48
106	E2M3	700	3.0	150	200		175	Si	DO4
107	8SM3	800	3.0		80			Si	A3ai
108	MR917	800	3.0		100		175J	Si	A282Ø
109	NS3008	800	3.0		300	8.3m		Si	A1eq
110▼	SR0308	800	3.0					Si	D04
111	1N2717	800	3.0	25A	15	8.3m	165A	Si	M126a
112	1N2738	800	3.0	25A	15	8.3m	165A	Si	M126d
113	1N2763	800	3.0	25A	15	8.3m	165A	Si	M126d
114	3AF8	800	3.0	25A	150		150C	Si	A3al
115	300R8B	800	3.0	25	250		175	Si	
116	M4K1	800	3.0	25	250		175A	Si	A1ep
117	M4K5	800	3.0	25	250		175A	Si	A1ep
118	M4K9	800	3.0	25	250		175A	Si	A1ep
119	1N5002	800	3.0	40A	300 §		175A	Si	M176a
120	3G8	800	3.0	40A	125	8.3m	175A	Si	A313k
121	V328	800	3.0	40A	100	8.3m	150J	Si	A1zz
122	V338	800	3.0	40A	100	8.3m	150J	Si	A1zz
123	V348	800	3.0	40A	200	8.3m	150J	Si	A1zz
124	V358	800	3.0	40A	200	8.3m	150J	Si	A1zz
125	GSA30J	800	3.0	45	100		175J	SiΔ	A249h
126	1N4144	800	3.0	50A	300	8.3m	175A	Si	A1vm
127	1S2768	800	3.0	50A	100	10m	175J	SiΔ	A249a
128	1S2768A	800	3.0	50A	100	10m	175J	SiΔ	A249a
129	3A800	800	3.0	50A	50	8.0m	150	Si	A1eq
130	3A800FS	800	3.0	50	50	8.0m	150	Si	A298q
131	3C800	800	3.0	50A	300	8.3m	175A	Si	A3q
132	3LC12	800	3.0	50A	90		150J	Si	S19s
133	AS3F	800	3.0	50A	300	8.3m	150A	Si	A1vp
134	BY254	800	3.0	50A	100	10m	150J	Si	DO27
135	D3-800	800	3	50L	80	10m	150J	Si	A422
136	HAB080	800	3.0	50	300	8.3m	150A	Si	A1ez
137	PF8HZ	800	3.0	50A	100	10m	150J	Si	DO27
138▼	S3-800	800	3.0	50	200		175J	Si	u5c
139	S3A8	800	3.0	50A	300	8.3m	175C	Si	A1ey
140	1N3367	800	3.0	55C	30	8.3m	200C	Si	S505
141	FR306G	800	3.0	55A	125		175A	Si	DO27
142	SDA113F	800	3.0	55C	50		125	†	M1158
143	SRS380	800	3.0	55A	125		175A	Si	A340a
144	G4K	800	3.0	70A	125	8.3m	175A	Si	A313n
145	H15N	800	3.0	70A	100	8.3m	175	Si	A94X
146	1N4724	800	3.0	75A	300		175A	Si	A179aØ
147▼	1N5407G	800	3.0	75A	200	8.3m	175A	Si	DO27
148	3E8	800	3.0	75A	300	4.0m	175A	Si	A1vk
149	AE3F	800	3.0	75A	300	4.0m	175A	Si	A1vk
150	BYW17-800	800	3.0	80A	240	10m	150J	Si	A318
151	BYW18-800	800	3.0	80A	240	10m	150J	Si	A318
152	S58	800	3.0	80$	20			Si	S48
153	3LZ61	800	3.0	95A	100	10m	175J	Si	A109f
154	GI508	800	3.0	95A	100	8.3m	175A	Si	DO201
155	MR508	800	3.0	95A	100		175J	Si	A282
156	HR800	800	3.0	100	300 §	8.0m	150A	Si	A1sm
157	P300K	800	3.0	100A	200	8.3m	175	Si	A3ac
158	U15G	800 %	3.0	100L	60	10m	175J	Si	A94m
159	1N5407	800	3.0	105C	200 §		170C	Si	A3q
160	DA3/800	800	3.0	120A	80 §	10m	175J	Si§	A249l
161	1S417	800	3.0	125S	33		150S	Si	S61Δ
162	1S438	800	3.0	125B			150	SiΔ	A89
163	E2N3	800	3.0	150	200		175	Si	DO4
164	3LF11	800	3.0	155C	90	10m	175J	Si	S187a
165	S3A9	900	3.0		300			Si	A1ey
166	300R9B	900	3.0	25	250		175	Si	
167	SSiC1260	900	3.0	45A	100	10m	180J	SiΔ	A231
168	3A900	900	3.0	50	50	8.0m	150	Si	A298q
169	3A900FS	900	3.0	50	50	8.0m	150	Si	A298q
170	398V	900	3.0	50A	200	8.3m	170A	SiΔ	A3ad
171	1N3368	900	3.0	55C	30	8.3m	200C	Si	S505
172	S59	900	3.0	80$	20			Si	S48
173	BYX49-900	900	3.0	120B	40 §	10m	150J	Si	M754
174▼	S3-1000	1.0k	3.0	50	200		175J	Si	u5c
175▼	S3-1200	1.2k	3.0	50	200		175J	Si	u5c
176	SUES1101	50	3.5	75L	100	8.3m	175	Si	A1ty
177	1N1575	100	3.5	25C	70		150C	SiΔ	S175
178	350R1B	100	3.5	25	250		175	Si	
179	DBA60B	100	3.5	40	200		150J	SiΔ	
180	SUES1102	100	3.5	75L	100	8.3m	175	Si	A1ty
181	1N3569	100	3.5	85C	35	8.3m	165C	Si	DO4
182	SUES1103	150	3.5	75L	100	8.3m	175	Si	A1ty
183	1N1576	200	3.5	25C	70		150C	SiΔ	S175
184	350R2B	200	3.5	25	250		175	Si	
185	DBA60C	200	3.5	40	200		150J	SiΔ	
186	BYM56A	200	3.5	50C	80		175J	Si	A313
187	SS-3	200	3.5	60A	200	10m	150J	Si	M823
188	1N3570	200	3.5	85C	35	8.3m	165C	Si	DO4
189	1N1577	300	3.5	25C	70		150C	SiΔ	S175
190	350R3B	300	3.5	25	250		175	Si	
191	1N3571	300	3.5	85C	35	8.3m	165C	Si	DO4
192	1N1578	400	3.5	25C	70		150C	SiΔ	S175
193	350R4B	400	3.5	25	250		175	Si	
194	DBA60E	400	3.5	40	200		150J	SiΔ	
195	BYM56B	400	3.5	50C	80		175J	Si	A313
196	1N3572	400	3.5	85C	35	8.3m	165C	Si	DO4
197	350R5B	500	3.5	25	250		175	Si	
198	1N3573	500	3.5	85C	35	8.3m	165C	Si	DO4
199	350R6B	600	3.5	25	250		175	Si	
200	S3V60	600	3.5	40	120	1.0	150	Si	
201	BYM56C	600	3.5	50C	80		175J	Si	A313
202	1N3574	600	3.5	85C	35	8.3m	165C	Si	DO4
203	350R7B	700	3.5	25	250		175	Si	
204	350R8B	800	3.5	25	250		175	Si	
205	BYM56D	800	3.5	50C	80		175J	Si	A313
206	350R9B	900	3.5	25	250		175	Si	
207	423FF1AH1	50	3.6	50A	50		150A	Si	M1233
208	1N2669	100	3.6	25A	15	8.3m	165A	Si	M126a
209	1N2740	100	3.6	25A	15	8.3m	165A	Si	M126c
210	423AF1AH1	100	3.6	50A	50		150A	Si	M1233
211	1N2673	200	3.6	25A	15	8.3m	165A	Si	M126a
212	1N2742	200	3.6	25A	15	8.3m	165A	Si	M126c
213	423BF1AH1	200	3.6	50A	50		150A	Si	M1233
214	1N2677	300	3.6	25A	15	8.3m	165A	Si	M126a
215	1N2744	300	3.6	25A	15	8.3m	165A	Si	M126c
216	1N2681	400	3.6	25A	15	8.3m	165A	Si	M126a
217	1N2746	400	3.6	25A	15	8.3m	165A	Si	M126c
218	423DF1AH1	400	3.6	50A	50		150A	Si	M1233
219	1N2685	600	3.6	25A	15	8.3m	165A	Si	M126c
220	1N2748	600	3.6	25A	15	8.3m	165A	Si	M126g

5. GENERAL-PURPOSE RECTIFIERS - $I_O \geq 2$ A (Cont'd)

IN ORDER OF: (1) IO MAX (2) PIV (3) ° TEMP & (4) TYPE NMBER

LINE No.	4 TYPE NUMBER	2 PIV (V)	MAX AVG FWD DC CURRENT 1 Io MAX (A)	3 @ TEMP (°C)	MAX RATING SURGE CURR PEAK 1 Cy (A)	PULSE WIDTH (s)	MAX. TEMP (°C)	MAT	DRAWING No.
1	423MF1AH1	600	3.6	50A	50		150A	Si	M1233
2	1N2687	800	3.6	25A	15	8.3m	165A	Si	M126c
3	1N2749	800	3.6	25A	15	8.3m	165A	Si	M126g
4	423NF1AH1	800	3.6	50A	50		150A	Si	M1233
5	1N2689	900	3.6	25A	15	8.3m	165A	Si	M126e
6	DBA100B	100	3.7	40	200		150J	SiΔ	
7	DBA100C	200	3.7	40	200		150J	SiΔ	
8	DBA100E	400	3.7	40	200		150J	SiΔ	
9	5B1	100	3.75	50J	200	10m	140	Si	
10	5B2	200	3.75	50J	200	10m	140	Si	
11	5B3	300	3.75	50J	200	10m	140	Si	
12	5B4	400	3.75	50J	200	10m	140	Si	
13	524FD1AD1	50	3.8	55C	110		125J	Si	M947*
14	524AD1AD1	100	3.8	55C	110		125J	Si	M947*
15	524BD1AD1	200	3.8	55C	110		125J	Si	M947*
16	524DD1AD1	400	3.8	55C	110		125J	Si	M947*
17	524MD1AD1	600	3.8	55C	110		125J	Si	M947*
18	BYS24-45	45	4.0	104C	120		125J	Si	Y220AB*
19	SDR4001	50	4.0		120			Si#	DO4
20	1N1917	50 *	4.0	25	30	16m	250	SiΔ	S82
21	UT4005	50	4.0	25A	100	8.3m	175A	Si	A380a
22	RS401F	50	4.0	50A	250		125A	Si	
23	SDR4002	80	4.0		120			Si#	DO4
24	SDR4003	100	4.0		120			Si#	DO4
25	1N1918	100	4.0	25	30	16m	250	Si	S82a
26	400R1B	100	4.0	25	250		175	Si	
27	UT4010	100	4.0	25A	100	8.3m	175A	Si	A380a
28	1N2512	100	4.0	30C	30		165	SiΔ	DO4Δ
29	1N2518	100	4.0	30C	25		150C	SiΔ	S117
30	S2HB10	100	4.0	40	80	1.0	150	Si	
31	4B10Y	100	4.0	52A	250	10m	140J	Si	M1253
32	40D1	100	4.0	120L	200	5.0m	175J	Si	A1fd
33	SDR4004	120	4.0		120			Si#	DO4
34	1N5180	120	4.0	25A	100		175A	Si	A146e
35	SDR4005	140	4.0		50			Si#	DO4
36	SSiC1310	150	4.0	120C	100	10m	150J	SiΔ	S112bΔ
37	1N1919	200	4.0	25	30	16m	250	Si	S82a
38	400R2B	200	4.0	25	250		175	Si	
39	UT4020	200	4.0	25A	100	8.3m	175A	Si	A380a
40	1N2513	200	4.0	30C	30		165	SiΔ	DO4Δ
41	1N2519	200	4.0	30C	25		150C	SiΔ	S117
42	S2HB20	200	4.0	40	80	1.0	150	Si	
43	4B20Y	200	4.0	52A	250	10m	140J	Si	M1253
44	40D2	200	4.0	120L	200	5.0m	175J	Si	A1fd
45	1N1920	300	4.0	25	30	16m	250	Si	S82a
46	400R3B	300	4.0	25	250		175	Si	
47	1N2514	300	4.0	30C	30		165	SiΔ	DO4Δ
48	1N2520	300	4.0	30C	25		150C	SiΔ	S117
49	4B30Y	300	4.0	52A	250	10m	140J	Si	M1253
50	SSiC1320	300	4.0	120C	100	10m	150J	SiΔ	S112bΔ
51	1N1921	400	4.0	25	30	16m	250	Si	S82a
52	400R4B	400	4.0	25	250		175	Si	
53	UT4040	400	4.0	25A	100	8.3m	175A	Si	A380a
54	1N2515	400	4.0	30A	30		165	SiΔ	DO4Δ
55	1N2521	400	4.0	30C	25		150C	SiΔ	DO4
56	S2HB40	400	4.0	40	80	1.0	150	Si	
57	4B40Y	400	4.0	52A	250	10m	140J	Si	M1253
58	40D4	400	4.0	120L	200	5.0m	175J	Si	A1fd
59	1N5207	440	4.0	25A	100		175A	Si	A146e
60	1N1922	500	4.0	25	30	16m	250	Si	S82a
61	400R5B	500	4.0	25	250		175	Si	
62	1N2516	500	4.0	30C	30		165	SiΔ	DO4Δ
63	1N2522	500	4.0	30C	25		150C	SiΔ	S117
64	1N1923	600	4.0	25	30	16m	250	Si	S82a
65	400R6B	600	4.0	25	250		175	Si	
66	UT4060	600	4.0	25A	100	8.3m	175A	Si	A380a
67	1N2517	600	4.0	30C	30		165	SiΔ	DO4Δ
68	1N2523	600	4.0	30C	25		150C	SiΔ	DO4
69	S4VB60	600	4.0	40	80	1.0	150	Si	
70	40D6	600	4.0	120L	200	5.0m	175J	Si	A1fd
71	SSiC1340	600	4.0	120C	100	10m	150J	SiΔ	S112bΔ
72	1N1924	700	4.0	25	30	16m	250	Si	S82a
73	400R7B	700	4.0	25	250		175	Si	
74	1N1925	800	4.0	25	30	16m	250	Si	S82a
75	400R8B	800	4.0	25	250		175	Si	
76	40D8	800	4.0	120L	200	5.0m	175J	Si	A1fd
77	1N1926	900	4.0	25	30	16m	250	Si	S82a
78	400R9B	900	4.0	25	250		175	Si	
79	SSiC2060A	900	4.0	115C	75	10m	150J	SiΔ	S112bΔ
80	SSiC1360	900	4.0	120C	100	10m	150J	SiΔ	S112bΔ
81	523FD1AD1	50	4.2	55C	150		150J	Si	M947*
82	523AD1AD1	100	4.2	55C	150		150J	Si	M947*
83	523BD1AD1	200	4.2	55C	150		150J	Si	M947*
84	523DD1AD1	400	4.2	55C	150		150J	Si	M947*
85	523MD1AD1	600	4.2	55C	150		150J	Si	M947*
86	523ND1AD1	800	4.2	55C	150		150J	Si	M947*
87	450R1B	100	4.5	25	250		175	Si	
88	450R2B	200	4.5	25	250		175	Si	
89	450R3B	300	4.5	25	250		175	Si	
90	450R4B	400	4.5	25	250		175	Si	
91	450R5B	500	4.5	25	250		175	Si	
92	450R6B	600	4.5	25	250		175	Si	
93	450R7B	700	4.5	25	250		175	Si	
94	450R8B	800	4.5	25	250		175	Si	
95	450R9B	900	4.5	25	250		175	Si	

$I_O \geq 5$ A

LINE No.	TYPE NUMBER	PIV (V)	Io MAX (A)	@ TEMP (°C)	PEAK 1 Cy (A)	PULSE WIDTH (s)	MAX. TEMP (°C)	MAT	DRAWING No.
99	GI5823	20	5.0	80L	500		150	Si	E201d
100	S3A025	25	5.0		300			Si	A1ey
101	SSH5A020	30	5.0		250			Si	A1ey
102	SSH5A030	30	5.0		250			Si	A1ey
103	GI5824	30	5.0	80L	500		150	Si	E201d
104	SSH5A040	40	5.0		250			Si	A1ey
105	GI5825	40	5.0	80L	500		150	Si	E201d
106	BYS27-45	45	5.0	85C	140		150J	Si	A1abk
107	1N1612	50	5.0				175A	Si	DO4
108	5A50	50	5.0		300			Si	Aleq
109	5C50	50	5.0		300			Si	A3q
110	SSH5A050	50	5.0		250			Si	A1ey
111	1N2228	50	5.0	25$	20		150	SiΔ	DO4
112	1N2228A	50	5.0	25$	100		150	SiΔ	DO4
113	1N2229	50	5.0	25$	20		150	SiΔ	S35
114	1N2229A	50	5.0	25$	100		150	SiΔ	S35
115	S5A05	50	5.0	50A	300	8.3m	175C	Si	A1ey
116	EGP50A	50	5.0	55	150	8.3m	150	$	DO201A
117	FE5A	50	5.0	55	135	8.3m	175	$	A313n
118	M5A5	50	5.0	55A	300		175A	Si	A1ep
119	BY550/50	50	5.0	60	300	10m	175	Si	DO13
120	SGI5301	50	5.0	75C	110	8.3m	175J	Si	A333e
121	5D50	50	5.0	95C	350		175J	Si	A298an
122	1N1058	50	5.0	100A	60 §	4.0m	170C	Si	S67a
123	1N1064	50	5.0	100A	60 §	4.0m	170C	Si	S66c
124	1N1070	50	5.0	100A	60 §	4.0m	170C	Si	S68c
125	GPP5A	50	5.0	100A	150	8.3m	175J	Si	u10d
126	ESP550	50	5.0	105C	200	8.3m	150C	Si	A3q
127	1N1612A	50	5.0	150C	150		190J	SiΔ	DO4Δ
128	E3A3	50	5.0	150	200		175	Si	DO4
129	F1A3	50	5.0	150C	200		175J	Si	DO5
130	SSH5A060	60	5.0		250			Si	A1ey
131	5F1S07	70	5.0	125	65	10m		Si	M1097Ø
132	BYS24-90	90	5.0	92C	80		125J	Si	Y220AB*
133	1N1613	100	5.0				175A	Si	DO4
134	5A100	100	5.0		300			Si	Aleq
135	5C100	100	5.0		300			Si	A3q
136	D242B	100	5.0				125C	SiΔ	S495
137	D304	100	5.0				70A	Ge*	S496
138	1N2290	100	5.0	25	100		150	SiΔ	S35
139	500R1B	100	5.0	25	250		175	Si	
140	S5A1	100	5.0	50A	300	8.3m	175C	Si	A1ey
141	EGP50B	100	5.0	55	150	8.3m	150	$	DO201A
142	FE5B	100	5.0	55	135	8.3m	175	$	A313n
143	M5B5	100	5.0	55A	300		175A	Si	A1ep
144	SPD9000	100	5.0	55C	300 §		175J	Si	A52d
145	BY550/100	100	5.0	60	300	10m	175	Si	DO13
146	SGI5302	100	5.0	75C	110	8.3m	175J	Si	A333e
147	5D100	100	5.0	95C	350		175J	Si	A298an
148	1N1059	100	5.0	100A	60 §	4.0m	170C	Si	S67a
149	1N1065	100	5.0	100A	60 §	4.0m	170C	Si	S66c
150	1N1071	100	5.0	100A	60 §	4.0m	170C	Si	S68c
151	1N1089	100	5.0	100A	60 §	4.0m	170C	Si	F22h
152	1N1089A	100	5.0	100A				Si	F73
153	GPP5B	100	5.0	100A	150	8.3m	175J	Si	u10d
154	ESP5100	100	5.0	105C	200	8.3m	150C	Si	A3q
155	1N1613A	100	5.0	150C	150		190J	SiΔ	DO4Δ
156	E3B3	100	5.0	150	200		175	Si	DO4
157	F1B3	100	5.0	150C	200		175J	Si	DO5
158	EGP50C	150	5.0	55	150	8.3m	150	$	DO201A
159	FE5C	150	5.0	55	135	8.3m	175	$	A313n
160	SGI5303	150	5.0	75C	110	8.3m	175J	Si	A333e
161	1N1060	150	5.0	100A	60 §	4.0m	170C	Si	S67a
162	1N1066	150	5.0	100A	60 §	4.0m	170C	Si	S66c
163	1N1072	150	5.0	100A	60 §	4.0m	100	Si	S68c
164	5F1S15	150	5.0	125	65	10m		Si	M1097Ø
165	1N1614	200	5.0				175A	Si	DO4
166	5A200	200	5.0		300			Si	Aleq
167	5C200	200	5.0		300			Si	A3q
168	D243B	200	5.0				125C	SiΔ	S495
169	1N2230	200	5.0	25$	20		150	SiΔ	DO4
170	1N2230A	200	5.0	25$	100		150	SiΔ	DO4
171	1N2231	200	5.0	25$	20		150	SiΔ	S35
172	1N2231A	200	5.0	25$	100		150	SiΔ	S35
173	500R2B	200	5.0	25	250		175	Si	
174	D5FB20	200	5.0	25	200		150J	Si†	M1138
175	SKN5/02	200	5.0	45A	160	10m	180J	Si	S352b
176	S5A2	200	5.0	50A	300	8.3m	175C	Si	A1ey
177	EGP50D	200	5.0	55	150	8.3m	150	$	DO201A
178	FE5D	200	5.0	55	135	8.3m	175	$	A313n
179	M5C5	200	5.0	55A	300		175A	Si	A1ep
180	SPD9001	200	5.0	55C	300 §		175J	Si	A52d
181	BY550/200	200	5.0	60	300	10m	175	Si	DO13
182	SS-5	200	5.0	60A	250	10m	150J	Si	M824
183	SGI5304	200	5.0	75C	110	8.3m	175J	Si	A333e
184	SUES1304	200	5.0	75L	110	8.3m	175	Si	A1ee
185	5D200	200	5.0	95C	350		175J	Si	A298an
186	1N1061	200	5.0	100A	60 §	4.0m	170C	Si	S67a
187	1N1067	200	5.0	100A	60 §	4.0m	170C	Si	S66c
188	1N1073	200	5.0	100A	60 §	4.0m	170C	Si	S68c
189	1N1090	200	5.0	100A	60 §	4.0m	170C	Si	F22h
190	1N1090A	200	5.0	100A				Si	F73
191	GPP5D	200	5.0	100A	150	8.3m	175J	Si	u10d
192	ESP5200	200	5.0	105C	200	8.3m	150C	Si	A3q
193	1N1614A	200	5.0	150C	150		190J	SiΔ	DO4Δ
194	E3C3	200	5.0	150	200		175	Si	DO4
195	F1C3	200	5.0	150C	200		175J	Si	DO5
196	E3D3	250	5.0	150	200		175	Si	DO4
197	F1D3	250	5.0	150C	200		175J	Si	DO5
198	D245B	300	5.0				125C	SiΔ	S495
199	1N2232	300	5.0	25$	200		150	SiΔ	DO4
200	1N2232A	300	5.0	25$	100		150	SiΔ	DO4
201	1N2233	300	5.0	25$	20		150	SiΔ	S35
202	1N2233A	300	5.0	25$	100		150	SiΔ	S35
203	500R3B	300	5.0	25	250		175	Si	
204	S5A3	300	5.0	50A	300	8.3m	175C	Si	A1ey
205	M5D5	300	5.0	55A	300		175A	Si	A1ep
206	SUES1305	300	5.0	75L	110	8.3m	175	Si	A1ee
207	1N1062	300	5.0	100A	60 §	4.0m	170C	Si	S67a
208	1N1068	300	5.0	100A	60 §	4.0m	170C	Si	S66c
209	1N1074	300	5.0	100A	60 §	4.0m	170C	Si	S68c
210	1N1091	300	5.0	100A	60 §		170C	Si	F22h
211	1N1091A	300	5.0	100A				Si	F73
212	ESP5300	300	5.0	105C	200	8.3m	150C	Si	A3q
213	E3E3	300	5.0	150	200		175	Si	DO4
214	F1E3	300	5.0	150C	200		175J	Si	DO5
215	E3F3	350	5.0	150	200		175	Si	DO4
216	F1F3	350	5.0	150C	200		175J	Si	DO5
217	1N1615	400	5.0				175A	Si	DO4
218	5A400	400	5.0		300			Si	Aleq
219	5C400	400	5.0		300			Si	A3q
220	D246B	400	5.0				125C	SiΔ	S495

SYMBOLS AND CODES EXPLAINED IN INTERPRETER

5. GENERAL-PURPOSE RECTIFIERS - $I_O \geq 5$ A (Cont'd)

IN ORDER OF: (1) IO MAX (2) PIV (3) ° TEMP & (4) TYPE NMBER

LINE No.	4 TYPE NUMBER	2 PIV (V)	MAX AVG FWD DC CURRENT 1 Io MAX (A)	3 @ TEMP (°C)	MAX RATING SURGE CURR PEAK 1 Cy (A)	PULSE WIDTH (s)	MAX. TEMP (°C)	MAT	DRAWING No.
1	1N2234	400	5.0	25$	20		150	Si△	DO4
2	1N2234A	400	5.0	25$	100		150	Si△	DO4
3	1N2235	400	5.0	25$	20		150	Si△	S35
4	1N2235A	400	5.0	25$	100		150	Si△	S35
5	2DS506	400	5.0	25A			100A	Si△	S554
6	500R4B	400	5.0	25	250		175	Si	
7	D5FB40	400	5.0	25	200		150J	Si†	M1138
8	SKN5/04	400	5.0	45A	160	10m	180J	Si	S352b
9	S5A4	400	5.0	50A	300	8.3m	175C	Si	A1ey
10	M5E5	400	5.0	55A	300		175A	Si	A1ep
11	SPD9002	400	5.0	55C	300 §		175J	Si	A52d
12	BY550/400	400	5.0	60	300	10m	175	Si	DO13
13	SUES1306	400	5.0	75L	110	8.3m	175	Si	A1ee
14	5D400	400	5.0	95C	350		175J	Si	A298an
15	1N1063	400	5.0	100A	60 §	4.0m	170C	Si	S67a
16	1N1069	400	5.0	100A	60 §	4.0m	170C	Si	S66c
17	1N1075	400	5.0	100A	60 §	4.0m	170C	Si	S68c
18	1N1092	400	5.0	100A	60 §	4.0m	170C	Si	F22h
19	1N1092A	400	5.0	100A				Si	F73
20	GPP5G	400	5.0	100A	150	8.3m	175J	Si	u10d
21	ESP5400	400	5.0	105C	200	8.3m	150C	Si	A3q
22	1N1615A	400	5.0	150C	150		190J	Si△	DO4△
23	E3G3	400	5.0	150	200		175	Si	DO4
24	F1G3	400	5.0	150C	200		175J	Si	DO5
25	SDR5009	450	5.0		150			Si#	DO4
26	SDR7009	450	5		400			Si#	DO5
27	D247B	500	5.0				125C	Si△	S495
28	1N2236	500	5.0	25$	20		150	Si△	DO4
29	1N2236A	500	5.0	25$	100		150	Si△	DO4
30	1N2237	500	5.0	25$	20		150	Si△	S35
31	1N2237A	500	5.0	25$	100		150	Si△	S35
32	500R5B	500	5.0	25	250		175	Si	
33	S5A5	500	5.0	50A	300	8.3m	175C	Si	A1ey
34	M5F5	500	5.0	55A	300		175A	Si	A1ep
35	50LF	500	5.0	100A				Si	F73
36	ESP5500	500	5.0	105C	200	8.3m	150C	Si	A3q
37	E3H3	500	5.0	150	200		175	Si	DO4
38	F1H3	500	5.0	150C	200		175J	Si	DO5
39	1N1616	600	5.0				175A	Si	DO4
40	5A600	600	5.0		300			Si	Aleq
41	5C600	600	5.0		300			Si	A3q
42	D248B	600	5.0				125C	Si△	S495
43	1N2238	600	5.0	25$	20		150	Si△	DO4
44	1N2238A	600	5.0	25$	100		150	Si△	DO4
45	1N2239	600	5.0	25$	20		150	Si△	S35
46	1N2239A	600	5.0	25$	100		150	Si△	S35
47	500R6B	600	5.0	25	250		175	Si	
48	S5A6	600	5.0	50A	300	8.3m	175C	Si	A1ey
49	M5G5	600	5.0	55A	300		175A	Si	A1ep
50	SPD9003	600	5.0	55C	300 §		175J	Si	A52d
51	BY550/600	600	5.0	60	300	10m	175	Si	DO13
52	5D600	600	5.0	95C	350		175J	Si	A298an
53	60LF	600	5.0	100A				Si	F73
54	GPP5J	600	5.0	100A	150	8.3m	175J	Si	u10d
55	ESP5600	600	5.0	105C	200	8.3m	150C	Si	A3q
56	1N1616A	600	5.0	150C	150		190J	Si△	DO4△
57	E3K3	600	5.0	150	200		175	Si	DO4
58	F1K3	600	5.0	150C	200		175J	Si	DO5
59	500R7B	700	5.0	25	250		175	Si	
60	M5H5	700	5.0	55A	300		175A	Si	A1ep
61	E3M3	700	5.0	150	200		175	Si	DO4
62	F1M3	700	5.0	150C	200		175J	Si	DO5
63	5A800	800	5.0		300			Si	Aleq
64	5C800	800	5.0		300			Si	A3q
65	1N2240	800	5.0	25$	20		150	Si△	DO4
66	1N2240A	800	5.0	25$	100		150	Si△	DO4
67	1N2241	800	5.0	25$	20		150	Si△	S35
68	1N2241A	800	5.0	25$	100		150	Si△	S35
69	500R8B	800	5.0	25	250		175	Si	
70	SKN5/08	800	5.0	45A	160	10m	180J	Si	S352b
71	S5A8	800	5.0	50A	300	8.3m	175C	Si	A1ey
72	M5K5	800	5.0	55A	300		175A	Si	A1ep
73	SPD9004	800	5.0	55C	300 §		175J	Si	A52d
74	BY550/800	800	5.0	60	300	10m	175	Si	DO13
75	5D800	800	5.0	95C	350		175J	Si	A298an
76	GPP5K	800	5.0	100A	150	8.3m	175J	Si	u10d
77	ESP5800	800	5.0	105C	200	8.3m	150C	Si	A3q
78	1N4458	800	5.0	150B	150		175B	Si	DO4
79	E3N3	800	5.0	150	200		175	Si	DO4
80	F1N3	800	5.0	150C	200		175J	Si	DO5
81	500R9B	900	5.0	25	250		175	Si	
82	BYX98-900	900	5.0	125B	60 §	10m	150J	Si△	DO4⊠
83♦	HRSCH12500	12k	5.0	55	50			Si	A138f
84	550R1B	100	5.5	25	250		175	Si	
85	550R2B	200	5.5	25	250		175	Si	
86	550R3B	300	5.5	25	250		175	Si	
87	550R4B	400	5.5	25	250		175	Si	
88	550R5B	500	5.5	25	250		175	Si	
89	550R6B	600	5.5	25	250		175	Si	
90	550R7B	700	5.5	25	250		175	Si	
91	550R8B	800	5.5	25	250		175	Si	
92	550R9B	900	5.5	25	250		175	Si	
93	6A15	15	6.0	25	300	8.0m	175	Si	S19f
94	2RE52	20	6.0		125		175J	Si▼	TO52
95	VSK62	20	6.0	25	140		150J	♦	TO220
96	6A30	30	6.0	25	300	8.0m	175	Si	S19f
97	VSK63	30	6.0	25	140		150J	♦	TO220
98	VSK64	40	6.0	25	140		150J	♦	TO220
99	1N1341C	50	6.0		150			Si	DO4
100	5RE52	50	6.0		125		175J	Si▼	TO52
101	NS6000	50	6.0		300	8.3m		Si	
102	6A05△	50	6.0	25	400			Si	A1abm
103	6A50	50	6.0	25	300	8.0m	175	Si	S19f
104▼	GP600	50	6.0	25	400	16m		Si	Aleg
105	R250-A	50	6.0	40A	400	8.3m	175A	Si△	A386
106	R3400006	50	6.0	40A	400	8.3m	175A	Si	A3at
107	FR601	50	6.0	50A	300		175A	Si	Alaak
108	HER601	50	6.0	50A	300		175A	Si	A1aba
109	M7A5	50	6.0	50	400	8.3m	175	Si	A1ep
110	S6A05	50	6.0	50A	300	8.3m	175C	Si	A1ey
111	6A05G	50	6.0	55A	300		175A	Si	A1aba
112	FE6A	50	6.0	55	150	8.3m	175	$	A313n
113	FR601G	50	6.0	55A	300		175A	Si	A1aba
114♦	ICC6401	50	6.0	55A	400	8.3m	175	Si	A398j
115	NSS3541	50	6.0	55C	75			Si	V216g
116	NSS3541-F	50	6.0	55C	75			Si	V216g
117	6A05#B	50	6.0	60L	400	8.0m	175S	Si	A277e
118	GI750	50	6.0	60A	400	8.3m	175A	Si	A1eg
119	MR750	50	6.0	60A	400		175	Si	A416a
120♦	P600A	50	6.0	60A	400	10m	150	Si	DO29
121	SUES1301	50	6.0	75L	200	8.3m	175	Si	A1ee
122	6D50	50	6.0	95C	400		175J	Si	A298an
123	60S05	50	6.0	95C	400 §	8.3m	175J	Si	A52m
124	BY214-50	50	6.0	100	400	10m	150	Si	A318
125	1N1341	50	6.0	150C	66		190J	Si	S26
126	1N1341A	50	6.0	150B	150		200J	Si*	DO4
127	1N1341B	50	6.0	150C	150		190J	Si△	DO4△
128	1N2147	50	6.0	150C	150		150	Si	DO10
129	1N2147A	50	6.0	150C	150		150	Si	DO10
130	1N2272	50	6.0	150C	400	8.3m	150C	Si	DO5
131	1N2491	50	6.0	150C			190J	Si	DO4
132	1N2565	50	6.0	150C	150		150C	Si△	DO10
133	E4A3	50	6.0	150	200		175	Si	DO4
134	7RE52	70	6.0		125		175J	Si▼	TO52
135	T53A	75 %	6.0	134C	220	8.3m	150J	Si	S523
136	T54A	75 %	6.0	134C	200	10m	150J	Si	S523a
137	1SM6	80	6.0		200			Si	S513
138	T53T	95 %	6.0	134C	220	8.3m	150J	Si	S523
139	T54T	95 %	6.0	134C	200	10m	150J	Si	S523a
140	1N1342C	100	6.0		150			Si	DO4
141	1R61	100	6.0		170		125J	Si	
142	10RE52	100	6.0		125		175J	Si▼	TO52
143	NS6001	100	6.0		300	8.3m		Si	
144	6A10△	100	6.0	25	400			Si	A1abm
145	6A100	100	6.0	25	300	8.0m	175	Si	S19f
146	600R1B	100	6.0	25	250		175	Si	
147▼	GP601	100	6.0	25	400	16m		Si	Aleg
148	R250-B	100	6.0	40A	400	8.3m	175A	Si△	A386
149	R3400106	100	6.0	40A	400	8.3m	175A	Si	A3at
150	FR602	100	6.0	50A	300		175A	Si	Alaak
151	HER602	100	6.0	50A	300		175A	Si	A1aba
152	M7B5	100	6.0	50	400	8.3m	175	Si	A1ep
153	S6A1	100	6.0	50A	300	8.3m	175C	Si	A1ey
154	6A1G	100	6.0	55A	300		175A	Si	A1aba
155	FE6B	100	6.0	55	150	8.3m	175	$	A313n
156	FR602G	100	6.0	55A	300		175A	Si	A1aba
157♦	ICC6402	100	6.0	55A	400	8.3m	175	Si	A398j
158	NSS3541-1	100	6.0	55C	75			Si	V216g
159	NSS3541-1F	100	6.0	55C	75			Si	V216g
160	6A1	100	6.0	60L	400	8.0m	175S	Si	A277e
161	GI751	100	6.0	60A	400	8.3m	175A	Si	A1eg
162	P600B	100	6.0	60A	400		175A	Si△	A1eg
163	SUES1302	100	6.0	75L	200	8.3m	175	Si	A1ee
164	6D100	100	6.0	95C	400		175J	Si	A298an
165	60S1	100	6.0	95C	400 §	8.3m	175J	Si	A52m
166	10H3	100	6.0	100A	240		175C	Si	S187c⊠
167	BY214-100	100	6.0	100	400	10m	150	Si	A318
168	M6-100	100	6.0	120C	130 §	10m	150S	Si	DO4⊠
169	M6-100R	100	6.0	130A	130		150J	Si	DO4
170	1N1342	100	6.0	150C	66		190J	Si	S26
171	1N1342A	100	6.0	150B	150		200J	Si*	DO4
172	1N1342B	100	6.0	150C	150		190J	Si△	DO4△
173	1N2148	100	6.0	150C	150		150	Si	DO10
174	1N2148A	100	6.0	150C	150		150	Si	DO10
175	1N2273	100	6.0	150C	400	8.3m	150C	Si	DO5
176	1N2492	100	6.0	150C			190J	Si	DO4
177	1N2566	100	6.0	150C	150		150C	Si△	DO10
178	BY712	100	6.0	150C	150		150C	Si△	DO4
179	E4B3	100	6.0	150	200		175	Si	DO4
180	T53B	125 %	6.0	134C	220	8.3m	150J	Si	S523
181	T54B	125 %	6.0	134C	200	10m	150J	Si	S523a
182	1N1343C	150	6.0		150			Si	DO4
183	6A150	150	6.0		150			Si	DO4
184	6CC13	150	6.0	50A	200	10m	150J	Si	S19s
185	6CD13	150	6.0	50A	200	10m	150J	Si	S19s
186	FE6C	150	6.0	55	150	8.3m	175	$	A313n
187	SUES1303	150	6.0	75L	200	8.3m	175	Si	A1ee
188	1N1343	150	6.0	150C	66		190J	Si	S26
189	1N1343A	150	6.0	150B	150		200J	Si*	DO4
190	1N1343B	150	6.0	150C	150		190J	Si△	DO4△
191	2SM6	160	6.0		200			Si	S513
192	1N1344C	200	6.0		150			Si	DO4
193	1R62	200	6.0		170		125J	Si	
194	NS6002	200	6.0		300	8.3m		Si	
195	6A200	200	6.0	25	300	8.0m	175	Si	S19f
196	600R2B	200	6.0	25	250		175	Si	
197▼	GP602	200	6.0	25	400	16m		Si	Aleg
198	R250-D	200	6.0	40A	400	8.3m	175A	Si△	A386
199	R3400206	200	6.0	40A	400	8.3m	175A	Si	A3at
200	S2HB20Z	200	6.0	40A	80	20m	150J	Si	TO
201	FR603	200	6.0	50A	300		175A	Si	Alaak
202	HER603	200	6.0	50A	300		175A	Si	A1aba
203	M7C5	200	6.0	50	400	8.3m	175	Si	A1ep
204	S6A2	200	6.0	50A	300	8.3m	175C	Si	A1ey
205	6A2G	200	6.0	55A	300		175A	Si	A1aba
206	FE6D	200	6.0	55	150	8.3m	175	$	A313n
207	FR603G	200	6.0	55A	300		175A	Si	A1aba
208♦	ICC6403	200	6.0	55A	400	8.3m	175	Si	A398j
209	NSS3541-2	200	6.0	55C	75			Si	V216g
210	NSS3541-2F	200	6.0	55C	75			Si	V216g
211	6A2	200	6.0	60L	400	8.0m	175S	Si	A277e
212	GI752	200	6.0	60A	400	8.3m	175A	Si	A1eg
213	P600D	200	6.0	60A	400		175A	Si△	A1eg
214	6D200	200	6.0	95C	400		175J	Si	A298an
215	60S2	200	6.0	95C	400 §	8.3m	175J	Si	A52m
216	20H3	200	6.0	100A	240		175C	Si	S187c⊠
217	BY214-200	200	6.0	100	400	10m	150	Si	A318
218	M6-200	200	6.0	120C	130 §	10m	150S	Si	DO4⊠
219	M6-200R	200	6.0	130A	130		150J	Si	DO4
220	1N1344	200	6.0	150C	66		190J	Si	S26

SYMBOLS AND CODES EXPLAINED IN INTERPRETER

5. GENERAL-PURPOSE RECTIFIERS - $I_O \geq 5$ A (Cont'd)

IN ORDER OF: (1) IO MAX (2) PIV (3) ° TEMP & (4) TYPE NMBER

LINE No.	4 TYPE NUMBER	2 PIV (V)	MAX AVG FWD DC CURRENT 1 Io MAX (A)	3 @ TEMP (°C)	MAX RATING SURGE CURR PEAK 1 Cy (A)	PULSE WIDTH (s)	MAX. TEMP (°C)	MAT	DRAWING No.
1	1N1344A	200	6.0	150B	150		200J	Si*	DO4
2	1N1344B	200	6.0	150C	150		190J	Si△	DO4△
3	1N2149	200	6.0	150C	150		150	Si	DO10
4	1N2149A	200	6.0	150C	150		150	Si	DO10
5	1N2274	200	6.0	150C	400	8.3m	150C	Si	DO5
6	1N2493	200	6.0	150C			190J	Si	DO4
7	1N2567	200	6.0	150C	150		150C	Si△	DO10
8	BY713	200	6.0	150C	150		150C	Si△	DO4
9	E4C3	200	6.0	150	200		175	Si	DO4
10	E4D3	250	6.0	150	200		175	Si	DO4
11	1N1345C	300	6.0		150			Si	DO4
12	NS6003	300	6.0		300	8.3m		Si	
13	6A300	300	6.0	25	300	8.0m	175	Si	S19f
14	600R3B	300	6.0	25	250		175	Si	
15	R250-F	300	6.0	40A	400	8.3m	175A	Si△	A386
16	R3400306	300	6.0	40A	400	8.3m	175A	Si	A3at
17	6FC13	300	6.0	50A	200	10m	150J	Si	S19s
18	6FD13	300	6.0	50A	200	10m	150J	Si	S19s
19	HER604	300	6.0	50A	300		175A	Si	A1aba
20	M7D5	300	6.0	50	400	8.3m	175	Si	A1ep
21	S6A3	300	6.0	50A	300	8.3m	175C	Si	A1ey
22	NSS3541-3	300	6.0	55C	75			Si	V216g
23	NSS3541-3F	300	6.0	55C	75			Si	V216g
24	BYX49-300	300	6.0	85B	40 §	10m	150J	Si	M754⊠
25	60S3	300	6.0	95C	400 §	8.3m	175J	Si	A52m
26	30H3	300	6.0	100A	240		175C	Si	S187c⊠
27	BYX38-300	300 %	6.0	110B	50	10m	150J	Si	DO4⊠
28	BYX98-300	300	6.0	125B	75 §	10m	150J	Si△	DO4⊠
29	1N1345	300	6.0	150C	66		190J	Si	S26
30	1N1345A	300	6.0	150B	150		200J	Si*	DO4
31	1N1345B	300	6.0	150C	150		190J	Si△	DO4△
32	1N2150	300	6.0	150C	150		150	Si	DO10
33	1N2150A	300	6.0	150C	150		150	Si	DO10
34	1N2275	300	6.0	150C	400	8.3m	150C	Si	DO5
35	1N2494	300	6.0	150C			190J	Si	DO4
36	1N2568	300	6.0	150C	150		150C	Si△	DO10
37	E4E3	300	6.0	150	200		175	Si	DO4
38	4SM6	320	6.0		200			Si	S513
39	E4F3	350	6.0	150	200		175	Si	DO4
40	1N1346C	400	6.0		150			Si	DO4
41	NS6004	400	6.0		300	8.3m		Si	
42	6A400	400	6.0	25	300	8.0m	175	Si	S19f
43	600R4B	400	6.0	25	250		175	Si	
44▼	GP604	400	6.0	25	400	16m		Si	Aleg
45	R250-H	400	6.0	40A	400	8.3m	175A	Si△	A386
46	R3400406	400	6.0	40A	400	8.3m	175A	Si	A3at
47	S2HB40Z	400	6.0	40A	80	20m	150J	Si	TO
48	6GC12	400	6.0	50A	200		150J	Si	S19s
49	FR604	400	6.0	50A	300		175A	Si	Alaak
50	HER605	400	6.0	50A	300		175A	Si	A1aba
51	M7E5	400	6.0	50	400	8.3m	175	Si	A1ep
52	S6A4	400	6.0	50A	300	8.3m	175C	Si	A1ey
53	6A4G	400	6.0	55A	300		175A	Si	A1aba
54	FR604G	400	6.0	55A	300		175A	Si	A1aba
55♦	ICC6404	400	6.0	55A	400	8.3m	175	Si	A398j
56	NSS3541-4	400	6.0	55C	75			Si	V216g
57	NSS3541-4F	400	6.0	55C	75			Si	V216g
58	6A4	400	6.0	60L	400	8.0m	175S	Si	A277e
59	GI754	400	6.0	60A	400	8.3m	175A	Si	A1eg
60	P600G	400	6.0	60A	400		175A	Si△	A1eg
61	6D400	400	6.0	95C	400		175J	Si	A298an
62	60S4	400	6.0	95C	400 §	8.3m	175J	Si	A52m
63	40H3	400	6.0	100A	240		175C	Si	S187c⊠
64	BY214-400	400	6.0	100	400	10m	150	Si	A318
65♦	D6/400A	400	6.0	100C	120 §	10m	150J	Si	A231
66	M6-400	400	6.0	120C	130 §	10m	150S	Si	DO4⊠
67	M6-400R	400	6.0	130A	130		150J	Si	DO4
68	1N1346	400	6.0	150C	66		190J	Si	S26
69	1N1346A	400	6.0	150B	150		200J	Si*	DO4
70	1N1346B	400	6.0	150C	150		190J	Si△	DO4△
71	1N2151	400	6.0	150C	150		150	Si	DO10
72	1N2151A	400	6.0	150C	150		150	Si	DO10
73	1N2276	400	6.0	150C	400	8.3m	150C	Si	DO5
74	1N2495	400	6.0	150C			190J	Si	DO4
75	1N2569	400	6.0	150C	150		150C	Si△	DO10
76	E4G3	400	6.0	150	200		175	Si	DO4
77	6SM6	480	6.0		200			Si	S513
78	1N1347C	500	6.0		150			Si	DO4
79	NS6005	500	6.0		300	8.3m		Si	
80	6A500	500	6.0	25	300	8.0m	175	Si	S19f
81	600R5B	500	6.0	25	250		175	Si	
82	R250-K	500	6.0	40A	400	8.3m	175A	Si△	A386
83	R3400506	500	6.0	40A	400	8.3m	175A	Si	A3at
84	M7F5	500	6.0	50	400	8.3m	175	Si	A1ep
85	S6A5	500	6.0	50A	300	8.3m	175C	Si	A1ey
86	60S5#B	500	6.0	95C	400 §	8.3m	175J	Si	A52m
87	50H3	500	6.0	100A	240		175C	Si	S187c⊠
88	1N1347	500	6.0	150C	66		190J	Si	S26
89	1N1347A	500	6.0	150B	150		200J	Si*	DO4
90	1N1347B	500	6.0	150C	150		190J	Si△	DO4△
91	1N2152	500	6.0	150C	150		150	Si	DO10
92	1N2152A	500	6.0	150C	150		150	Si	DO10
93	1N2277	500	6.0	150C	400	8.3m	150C	Si	DO5
94	1N2496	500	6.0	150C			190J	Si	DO4
95	1N2570	500	6.0	150C	150		150C	Si△	DO10
96	E4H3	500	6.0	150	200		175	Si	DO4
97	1N1348C	600	6.0		150			Si	DO4
98	6A6F1	600	6.0		75			Si	DO10
99	6A6F	600	6.0		150			Si	DO4
100	NS6006	600	6.0		300	8.3m		Si	
101	6A600	600	6.0	25	300	8.0m	175	Si	S19f
102	600R6B	600	6.0	25	250		175	Si	
103▼	GP606	600	6.0	25	400	16m		Si	Aleg
104	R250-M	600	6.0	40A	400	8.3m	175A	Si△	A386
105	R3400606	600	6.0	40A	400	8.3m	175A	Si	A3at
106	S5VB60	600	6.0	40	200	1.0	150	Si	
107	6JC12	600	6.0	50A	200		150J	Si	S19s
108	FR605	600	6.0	50A	300		175A	Si	A1aak
109	M7G5	600	6.0	50	400	8.3m	175	Si	A1ep
110	S6A6	600	6.0	50A	300	8.3m	175C	Si	A1ey
111	6A6G	600	6.0	55A	300		175A	Si	A1aba
112	FR605G	600	6.0	55A	300		175A	Si	A1aba
113	ICC6405	600	6.0	55A	400	8.3m	175	Si	A398j
114	NSS3541-6	600	6.0	55C	75			Si	V216g
115	NSS3541-6F	600	6.0	55C	75			Si	V216g
116	6A6	600	6.0	60L	400	8.0m	175S	Si	A277e
117	GI756	600	6.0	60A	400	8.3m	175A	Si	A1eg
118	P600J	600	6.0	60A	400		175A	Si△	A1eg
119	BYX49-600	600	6.0	85B	40 §	10m	150J	Si	M754⊠
120	BY214-600	600	6.0	90A	400	10m	150J	Si	A318
121	6D600	600	6.0	95C	400		175J	Si	A298an
122	60S6	600	6.0	95C	400 §	8.3m	175J	Si	A52m
123	60H3	600	6.0	100A	240		175C	Si	S187c⊠
124	BYX38-600	600 %	6.0	110B	50	10m	150J	Si	DO4⊠
125	M6-600	600	6.0	120C	130 §	10m	150S	Si	DO4⊠
126	BYX98-600	600	6.0	125B	75 §	10m	150J	Si△	DO4⊠
127	M6-600R	600	6.0	130A	130		150J	Si	DO4
128	MZ6-600	600	6.0	130A	130		150J	Si	DO4
129	1N1348	600	6.0	150C	66		190J	Si	S26
130	1N1348A	600	6.0	150B	150		200J	Si*	DO4
131	1N1348B	600	6.0	150C	150		190J	Si△	DO4△
132	1N2153	600	6.0	150C	150		150	Si	DO10
133	1N2153A	600	6.0	150C	150		150	Si	DO10
134	1N2278	600	6.0	150C	400	8.3m	150C	Si	DO5
135	1N2497	600	6.0	150C			190J	Si	DO4
136	1N2571	600	6.0	150C	150		150C	Si△	DO10
137	E4K3	600	6.0	150	200		175	Si	DO4
138	8SM6	640	6.0		200			Si	S513
139	NS6007	700	6.0		300	8.3m		Si	
140	600R7B	700	6.0	25	250		175	Si	
141	R250P	700	6.0	40A	400			Si	A386
142	M7H5	700	6.0	50	400	8.3m	175	Si	A1ep
143	1N2557	700	6.0	150C	150		150C	Si△	DO10
144	1N2561	700	6.0	150C	150		150C	Si△	DO10
145	1N2572	700	6.0	150C	150		150C	Si△	DO10
146	1N3987	700	6.0	150C	50		150	Si△	DO4
147	6A700	700	6.0	150C	150		200J	Si△	DO4
148	E4M3	700	6.0	150	200		175	Si	DO4
149	6A8F1	800	6.0		75			Si	DO10
150	6A8F	800	6.0		150			Si	DO4
151	10SM6	800	6.0		200			Si	S513
152	NS6008	800	6.0		300	8.3m		Si	
153▼	SR0608	800	6.0					Si	D04
154	600R8B	800	6.0	25	250		175	Si	
155▼	GP608	800	6.0	25	400	16m		Si	Aleg
156	R250S	800	6.0	40A	400			Si	A386
157	R3400806	800	6.0	40A	400	8.3m	175A	Si	A3at
158	6LC12	800	6.0	50A	200		150J	Si	S19s
159	FR606	800	6.0	50A	300		175A	Si	Alaak
160	M7K5	800	6.0	50	400	8.3m	175	Si	A1ep
161	S6A8	800	6.0	50A	300	8.3m	175C	Si	A1ey
162	6A8G	800	6.0	55A	300		175A	Si	A1aba
163	FR606G	800	6.0	55A	300		175A	Si	A1aba
164	ICC6406	800	6.0	55A	400	8.3m	175	Si	A398j
165	NSS3541-8	800	6.0	55C	75			Si	V216g
166	NSS3541-8F	800	6.0	55C	75			Si	V216g
167	6A8	800	6.0	60L	400	8.0m	175S	Si	A277e
168	GI758	800	6.0	60A	400	8.3m	175A	Si	A1eg
169	MR758	800	6.0	60A	400		175	Si	
170	P600K	800	6.0	60A	400		175A	Si△	A1eg
171	BY214-800	800	6.0	90A	400	10m	150J	Si	A318
172	6D800	800	6.0	95C	400		175J	Si	A298an
173	60S8	800	6.0	95C	400 §	8.3m	175J	Si	A52m
174	80H3	800	6.0	100A	240		175C	Si	S187c⊠
175♦	D6/800A	800	6.0	100C	120 §	10m	150J	Si	A231
176	M6-800	800	6.0	120C	130 §	10m	150S	Si	DO4⊠
177	M6-800R	800	6.0	130A	130		150J	Si	DO4
178	MZ6-800	800	6.0	130A	130		150J	Si	DO4
179	MZ6-800R	800	6.0	130A	130		150J	Si	DO4
180	6LF11	800	6.0	145C	150	10m	175J	Si	S187a
181	1N2279	800	6.0	150C	400	8.3m	150C	Si	DO5
182	1N2558	800	6.0	150C	150		150C	Si△	DO10
183	1N2562	800	6.0	150C	150		150C	Si△	DO10
184	1N2573	800	6.0	150C	150		150C	Si△	DO10
185	1N3988	800	6.0	150C	50		150	Si△	DO4
186	6A800	800	6.0	150C	150		200J	Si△	DO4
187	BY409	800	6.0	150C	150		150C	Si	S35
188	E4N3	800	6.0	150	200		175	Si	DO4
189	600R9B	900	6.0	25	250		175	Si	
190	BYX38-900	900 %	6.0	110B	50	10m	150J	Si	DO4⊠
191	1N2559	900	6.0	150C	150		150C	Si△	DO10
192	1N2563	900	6.0	150C	150		150C	Si△	DO10
193	1N2574	900	6.0	150C	150		150C	Si△	DO10
194	1N3989	900	6.0	150C	50		150	Si△	DO4
195	6A900	900	6.0	150C	150		200J	Si△	DO4
196	S25A05HE	50	6.25	25A	150		150	Si	M1306
197	S25A10HE	100	6.25	25A	150		150	Si	M1306
198	S25A15HE	150	6.25	25A	150		150	Si	M1306
199	HSE7000-RT	50	6.3	25	100	8.3m	175C	Si	DO4
200	HSE7001-RT	100	6.3	25	100	8.3m	175C	Si	DO4
201	HSE7002-RT	200	6.3	25	100	8.3m	175C	Si	DO4
202	HSE7003-RT	300	6.3	25	100	8.3m	175C	Si	DO4
203	HSE7004-RT	400	6.3	25	100	8.3m	175C	Si	DO4
204	HSE7005-RT	500	6.3	25	100	8.3m	175C	Si	DO4
205	HSE7006-RT	600	6.3	25	100	8.3m	175C	Si	DO4
206	HSE7007-RT	700	6.3	25	100	8.3m	175C	Si	DO4
207	HSE7008-RT	800	6.3	25	100	8.3m	175C	Si	DO4
208	BY229-200	200	6.5	100	60	10m	150	Si	Y220a
209	BY249-300	300	6.5	110A	60	10m	150J	Si	Y220c⊠
210	BY229-400	400	6.5	100	60	10m	150	Si	Y220a
211	BY229-600	600	6.5	100	60	10m	150	Si	Y220a
212	BY249-600	600	6.5	110A	60	10m	150J	Si	Y220c⊠
213	BY229-800	800	6.5	100	60	10m	150	Si	Y220a
214	PHR5007N	50	7.0	25	250	10m	175J	Si	TO3⊠
215	SSCDA05FR	50	7.0	55C	125		150	Si	M1053b
216	SSCNA05FR	50	7.0	55C	125		150	Si	M1053a
217	SSCPA05FR	50	7.0	55C	125		150	Si	M1053b
218	1N1612R	50	7.0	150B	150		190A	Si	DO4
219	PFR107N	100	7.0	25	150	10m	175J	Si	TO3⊠*
220	PHR107N	100	7.0	25	250	10m	175J	Si	TO3⊠

SYMBOLS AND CODES EXPLAINED IN INTERPRETER

5. GENERAL-PURPOSE RECTIFIERS - $I_O \geq 5$ A (Cont'd)

IN ORDER OF: (1) IO MAX (2) PIV (3) * TEMP & (4) TYPE NMBER

LINE No.	4 TYPE NUMBER	2 PIV (V)	MAX AVG FWD DC CURRENT 1 Io MAX (A)	3 @ TEMP (°C)	MAX RATING SURGE CURR PEAK 1 Cy (A)	PULSE WIDTH (s)	MAX. TEMP (°C)	MAT	DRAWING No.
1	SSCDA1FR	100	7.0	55C	125		150	Si	M1053b
2	SSCNA1FR	100	7.0	55C	125		150	Si	M1053a
3	SSCPA1FR	100	7.0	55C	125		150	Si	C236
4	1N1613R	100	7.0	150B	150		190A	Si	DO4
5	PFR207N	200	7.0	25	150	10m	175J	Si	TO3Ø
6	PHR207N	200	7.0	25	250	10m	175J	Si	TO3Ø
7	SSCDA2FR	200	7.0	55C	125		150	Si	M1053b
8	SSCNA2FR	200	7.0	55C	125		150	Si	M1053a
9	SSCPA2FR	200	7.0	55C	125		150	Si	M1053b
10	SS7	200	7.0	60	250	10m	150S	Si	M824
11	SS7R	200	7.0	60	250	10m	150S	Si	M824
12	BY229-200R	200	7.0	100A	75	20u	150J	Si	TO220A
13	1N1614R	200	7.0	150B	150		190A	Si	DO4
14	SDR5007	300	7.0		150			Si#	DO4
15	SDR5008	400	7.0		150			Si#	DO4
16	SSCDA4FR	400	7.0	55C	125		150	Si	M1053b
17	SSCNA4FR	400	7.0	55C	125		150	Si	M1053a
18	SSCPA4FR	400	7.0	55C	125		150	Si	M1053b
19	BY229-400R	400	7.0	100A	75	20u	150J	Si	TO220A
20	1N1615R	400	7.0	150B	150		190A	Si	DO4
21	PBYX71	600	7.0	25	60	10m	150J	Si	TO3Ø
22	SSCDA6FR	600	7.0	55C	125		150	Si	M1053b
23	SSCNA6FR	600	7.0	55C	125		150	Si	M1053a
24	SSCPA6FR	600	7.0	55C	125		150	Si	M1053b
25	BY229-600R	600	7.0	100A	75	20u	150J	Si	TO220A
26	1N1616R	600	7.0	150B	150		190A	Si	DO4
27	BY229-800R	800	7.0	100A	75	20u	150J	Si	TO220A
28	1N2692	100	7.2	25A	15	8.3m	165A	Si	M126e
29	1N2694	200	7.2	25A	15	8.3m	165A	Si	M126e
30	1N2696	300	7.2	25A	15	8.3m	165A	Si	M126e
31	1N2698	400	7.2	25A	15	8.3m	165A	Si	M126e
32	1N2700	600	7.2	25A	15	8.3m	165A	Si	M126j
33	1N2701	800	7.2	25A	15	8.3m	165A	Si	M126j
34	MBR735	35	7.5	105C	150	8.3m	150J	♦	Y220AC
35	MBR745	45	7.5	105C	150	8.3m	150J	♦	Y220AC
36	UT5105	50	7.5	100C	150	8.3m	175A	Si	S277Ø
37	UT5110	100	7.5	100C	150	8.3m	175A	Si	S277Ø
38	UT5120	200	7.5	100C	150	8.3m	175A	Si	S277Ø
39	UT5140	400	7.5	100C	150	8.3m	175A	Si	S277
40	UT5160	600	7.5	100C	150	8.3m	175A	Si	S277Ø
41	HSE7010-RT	50	7.6	25	150	8.3m	175C	Si	DO4
42	524FC1AD1	50	7.6	55C	110		125J	Si	M947b*
43	HSE7011-RT	100	7.6	25	150	8.3m	175C	Si	DO4
44	524AC1AD1	100	7.6	55C	110		125J	Si	M947b*
45	HSE7012-RT	200	7.6	25	150	8.3m	175C	Si	DO4
46	524BC1AD1	200	7.6	55C	110		125J	Si	M947b*
47	HSE7013-RT	300	7.6	25	150	8.3m	175C	Si	DO4
48	HSE7014-RT	400	7.6	25	150	8.3m	175C	Si	DO4
49	524DC1AD1	400	7.6	55C	110		125J	Si	M947b*
50	HSE7015-RT	500	7.6	25	150	8.3m	175C	Si	DO4
51	HSE7016-RT	600	7.6	25	150	8.3m	175C	Si	DO4
52	524MC1AD1	600	7.6	55C	110		125J	Si	M947b*
53	HSE7017-RT	700	7.6	25	150	8.3m	175C	Si	DO4
54	HSE7018-RT	800	7.6	25	150	8.3m	175C	Si	DO4
55	HSE7019-RT	900	7.6	25	150	8.3m	175C	Si	DO4
56	PR332-RT	600	7.64		240			Si	DO4
57	PR333-RT	600	7.64		240			Si	DO4
58	S25A305HE	50	7.75	25A	150		150	Si	M1186a
59	S25A310HE	100	7.75	25A	150		150	Si	M1186a
60	S25A315HE	150	7.75	25A	150		150	Si	M1186a
61	BYS24	45	8		120	10m	125J	Si	M1221
62	AF68-3	48 %	8.0	100C	120		125J	Si	TO220*
63	FE8A	50	8.0	25A	125	8.3m	150J	Si$	Y220
64	GP80A	50	8.0	25A	175	8.3m	150J	Si	Y220
65	MDA800	50	8.0	25A	400		175J	Si	
66	RGP80A	50	8.0	25A	150	8.3m	125J	Si	Y220
67	FR801	50	8.0	50A	400		175A	Si	TO220A
68	HER801	50	8.0	50A	400		175A	Si	A1aba
69	SGI5401	50	8.0	125C	125	8.3m	150J	Si	TO220A
70	E5A3	50	8.0	150	200		175	Si	DO4
71	FE8B	100	8.0	25A	125	8.3m	150J	Si$	Y220
72	GP80B	100	8.0	25A	175	8.3m	150J	Si	Y220
73	RGP80B	100	8.0	25A	150	8.3m	125J	Si	Y220
74	FR802	100	8.0	50A	400		175A	Si	TO220A
75	HER802	100	8.0	50A	400		175A	Si	A1aba
76	S8-01	100	8.0	50A	200	10m	150J	Si	S19m
77	MDA801	100	8.0	55C	400		175J	Si	
78	SCDA10FF	100	8.0	55A	100		175J	Si	C236
79	NSR7140	100	8.0	100C	75			Si	TO3
80	SGI5402	100	8.0	125C	125	8.3m	150J	Si	TO220A
81	SX751	100	8.0	125A	100	10m	160J	Si	S31a
82	E5B3	100	8.0	150	200		175	Si	DO4
83	FE8C	150	8.0	25A	125	8.3m	150J	Si$	Y220
84	SGI5403	150	8.0	125C	125	8.3m	150J	Si	TO220A
85	FE8D	200	8.0	25A	125	8.3m	150J	Si$	Y220
86	GP80D	200	8.0	25A	175	8.3m	150J	Si	Y220
87	RGP80D	200	8.0	25A	150	8.3m	125J	Si	Y220
88	FR803	200	8.0	50A	400		175A	Si	TO220A
89	HER803	200	8.0	50A	400		175A	Si	A1aba
90	S8-02	200	8.0	50A	200	10m	150J	Si	S19m
91	MDA802	200	8.0	55C	400		175J	Si	
92	NSR7141	200	8.0	100C	75			Si	TO3
93	SGI5404	200	8.0	125C	125	8.3m	150J	Si	TO220A
94	SX752	200	8.0	125A	100	10m	160J	Si	S31a
95	E5C3	200	8.0	150	200		175	Si	DO4
96	E5D3	250	8.0	150	200		175	Si	DO4
97	FE8F	300	8.0	25A	125	8.3m	150J	Si$	Y220
98	HER804	300	8.0	50A	400		175A	Si	A1aba
99	NSR7142	300	8.0	100C	75			Si	TO3
100	SX753	300	8.0	125A	100	10m	160J	Si	S31a
101	E5E3	300	8.0	150	200		175	Si	DO4
102	E5F3	350	8.0	150	200		175	Si	DO4
103	FE8G	400	8.0	25A	125	8.3m	150J	Si$	Y220
104	GP80G	400	8.0	25A	175	8.3m	150J	Si	Y220
105	RGP80G	400	8.0	25A	150	8.3m	125J	Si	Y220
106	TG84	400	8.0	25A	100		150J	Si	Y220AC
107	FR804	400	8.0	50A	400		175A	Si	TO220A
108	HER805	400	8.0	50A	400		175A	Si	A1aba
109	S8-04	400	8.0	50A	200	10m	150J	Si	S19m
110	MDA804	400	8.0	55C	400		175J	Si	
111	NSR7143	400	8.0	100C	75			Si	TO3
112	SX754	400	8.0	125A	100	10m	160J	Si	S31a
113	E5G3	400	8.0	150	200		175	Si	DO4
114	E5H3	500	8.0	150	200		175	Si	DO4
115	GP80J	600	8.0	25A	175	8.3m	150J	Si	Y220
116	RGP80J	600	8.0	25A	150	8.3m	125J	Si	Y220
117	TG86	600	8.0	25A	100		150J	Si	Y220AC
118	FR805	600	8.0	50A	400		175A	Si	TO220A
119	S8-06	600	8.0	50A	200	10m	150J	Si	S19m
120	MDA806	600	8.0	55C	400		175J	Si	
121	E5K3	600	8.0	150	200		175	Si	DO4
122	E5M3	700	8.0	150	200		175	Si	DO4
123	GP80K	800	8.0	25A	175	8.3m	150J	Si	Y220
124	RGP80K	800	8.0	25A	150	8.3m	125J	Si	Y220
125	TG88	800	8.0	25A	100		150J	Si	Y220AC
126	FR806	800	8.0	50A	400		175A	Si	TO220A
127	S8-08	800	8.0	50A	200	10m	150J	Si	S19m
128	BY329-800	800	8.0	108A	80	10m	150J	Si	TO220A
129	E5N3	800	8.0	150	200		175	Si	DO4
130	1N2793	50	8.5	25A	75		175A	Si	DO5
131	523FC1AD1	50	8.5	55C	150		150J	Si	M947b*
132	SSCDA05	50	8.5	55C	150		150	Si	M1053b
133	SSCNA05	50	8.5	55C	150		150	Si	M1053a
134	SSCPA05	50	8.5	55C	150		150	Si	M1053b
135	1N2794	100	8.5	25A	75		175A	Si	DO5
136	S30A10FR	100	8.5	25A	200		150	Si	M1307
137	523AC1AD1	100	8.5	55C	150		150J	Si	M947b*
138	SSCDA1	100	8.5	55C	150		150	Si	M1053b
139	SSCNA1	100	8.5	55C	150		150	Si	M1053a
140	SSCPA1	100	8.5	55C	150		150	Si	M1053b
141	1N2795	150	8.5	25A	75		175A	Si	DO5
142	1N2796	200	8.5	25A	75		175A	Si	DO5
143	S30A20FR	200	8.5	25A	200		150	Si	M1307
144	523BC1AD1	200	8.5	55C	150		150J	Si	M947b*
145	SSCDA2	200	8.5	55C	150		150	Si	M1053b
146	SSCNA2	200	8.5	55C	150		150	Si	M1053a
147	SSCPA2	200	8.5	55C	150		150	Si	C236
148	1N2797	250	8.5	25A	75		175A	Si	DO5
149	1N2798	300	8.5	25A	75		175A	Si	DO5
150	1N2799	350	8.5	25A	75		175A	Si	DO5
151	1N2800	400	8.5	25A	75		175A	Si	DO5
152	S30A40FR	400	8.5	25A	200		150	Si	M1307
153	523DC1AD1	400	8.5	55C	150		150J	Si	M947b*
154	SCDA4F	400	8.5	55C	150		150	Si	C236
155	SCNA4F	400	8.5	55C	150		150	Si	C236
156	SCPA4F	400	8.5	55C	150		150	Si	C236
157	SSCDA4	400	8.5	55C	150		150	Si	M1053b
158	SSCNA4	400	8.5	55C	150		150	Si	M1053a
159	SSCPA4	400	8.5	55C	150		150	Si	M1053b
160	S30A60FR	600	8.5	25A	200		150	Si	M1307
161	523MC1AD1	600	8.5	55C	150		150J	Si	M947b*
162	SSCDA6	600	8.5	55C	150		150	Si	M1053b
163	SSCNA6	600	8.5	55C	150		150	Si	M1053a
164	SSCPA6	600	8.5	55C	150		150	Si	M1053b
165	523NC1AD1	800	8.5	55C	150		150J	Si	M947b*
166	UT6105	50	9.0	100C	175	8.3m	175A	Si	S277Ø
167	UT6110	100	9.0	100C	175	8.3m	175A	Si	S277Ø
168	UT6120	200	9.0	100C	175	8.3m	175A	Si	S277Ø
169	BYV29-300	300	9.0	116A	100	10m	150J	Si	TO220A
170	UT6140	400	9.0	100C	175	8.3m	175A	Si	S277
171	BYV29-400	400	9.0	116A	100	10m	150J	Si	TO220A
172	BYV29-500	500	9.0	116A	100	10m	150J	Si	TO220A
173	UT6160	600	9.0	100C	175	8.3m	175A	Si	S277Ø
174	HSE8050-RT	50	9.5	25	250	8.3m	175C	Si	DO5
175	HSE8051-RT	100	9.5	25	250	8.3m	175C	Si	DO5
176	S30A10	100	9.5	25A	250		150	Si	M1307
177	HSE8052-RT	200	9.5	25	250	8.3m	175C	Si	DO5
178	S30A20	200	9.5	25A	250		150	Si	M1307
179	D2015L	200	9.5	80C	150		110A	Si	Y220b
180	HSE8053-RT	300	9.5	25	250	8.3m	175C	Si	DO5
181	HSE8054-RT	400	9.5	25	250	8.3m	175C	Si	DO5
182	S30A40	400	9.5	25A	250		150	Si	M1307
183	D4015L	400	9.5	80C	150		110A	Si	Y220b
184	HSE8055-RT	500	9.5	25	250	8.3m	175C	Si	DO5
185	HSE8056-RT	600	9.5	25	250	8.3m	175C	Si	DO5
186	S30A60	600	9.5	25A	250		150	Si	M1307
187	D6015L	600	9.5	80C	150		110A	Si	Y220b
188	BYX39-600	600	9.5	85B	125 §	10m	175J	Si	DO4Ø
189	S30A80	800	9.5	25A	250		150	Si	M1307
190	BYX39-800	800	9.5	85B	125 §	10m	175J	Si	DO4Ø

$I_O \geq 10$ A

LINE No.	TYPE NUMBER	PIV (V)	MAX AVG FWD DC CURRENT 1 Io MAX (A)	3 @ TEMP (°C)	MAX RATING SURGE CURR PEAK 1 Cy (A)	PULSE WIDTH (s)	MAX. TEMP (°C)	MAT	DRAWING No.
194	MBR1020	20	10	135C	150		150J	♦	Y220ac
195	SB1020	20	10	135A	150		150	Si	Y220
196	MBR1035	35	10	135C	150	8.3m	150J	♦	Y220ac
197	SB1035	35	10	135A	150		150	Si	Y220
198	MBR1045	45	10	135C	150	8.3m	150J	♦	Y220ac
199	SB1045	45	10	135A	150		150	Si	Y220
200	BYV32-50	50	10		200		150J	$	TO220
201	D305	50	10				70A	Ge*	S496
202	SDR5001	50	10		200			Si#	DO4
203	SDR6001	50	10		400			Si#	DO4
204	SUES501	50	10		700			Si	DO5
205	1N2246	50	10	25C	200		150	Si△	DO4
206	1N2246A	50	10	25C	200		150	Si△	DO4
207	1N2247	50	10	25$	200		150	Si△	S35
208	1N2247A	50	10	25$	200		150	Si△	S35
209	10A50	50	10	50C	200		175J	Si	DO4
210	11R05S	50	10	120C	200		175J	Si△	S103
211	VHE1401	50	10	125	150	16m	175J	Si	Y220
212	1N248	50	10	150$			175S	Si	DO5
213	E6A3	50	10	150	200		175	Si	DO4
214	F2A3	50	10	150C	200		175J	Si	DO5
215	SUES502	75	10		700			Si	DO5
216	SDR5002	80	10		200			Si#	DO4
217	SDR6002	80	10		400			Si#	DO4
218	GEX541	80	10	25A	450	10	65J	Si	S16
219	BHC0001	100	10		300			Si	C251
220	BYV32-100	100	10		200		150J	$	TO220

SYMBOLS AND CODES EXPLAINED IN INTERPRETER

5. GENERAL-PURPOSE RECTIFIERS - $I_O \geq 10$ A (Cont'd)

IN ORDER OF: (1) IO MAX (2) PIV
(3) ° TEMP & (4) TYPE NMBER

LINE No.	4 TYPE NUMBER	2 PIV (V)	MAX AVG FWD DC CURRENT 1 Io MAX (A)	3 @ TEMP (°C)	MAX RATING SURGE CURR PEAK 1 Cy (A)	PULSE WIDTH (s)	MAX. TEMP (°C)	MAT	DRAWING No.
1	D242	100	10				125C	SiΔ	S495
2	D242A	100	10				125C	SiΔ	S495
3	S10VB10	100	10		200	8.3m	150J	Si†	
4	SDR5003	100	10		200			Si#	DO4
5	SDR6003	100	10		400			Si#	DO4
6	1N2248	100	10	25C	200		150	SiΔ	DO4
7	1N2248A	100	10	25C	200		150	SiΔ	DO4
8	1N2249	100	10	25$	200		150	SiΔ	S35
9	1N2249A	100	10	25C	200		150	SiΔ	S35
10	S35A310FR	100	10	25A	200		150	Si	M1308
11	10A100	100	10	50C	200		175J	Si	DO4
12	1N1621	100	10	100A	150	4.0m	100A	Si	S43
13	1S420	100	10	100B	200		175S	Si	S61Δ
14	1SR19-100	100	10	100C	250	10m	120J	Si	M856⊠
15	PF110S	100	10	100	250	10m		Si	M586⊠
16	VHE1402	100	10	125	150	16m	175J	Si	Y220
17	1N249	100	10	150$			175S	Si	DO5
18	E6B3	100	10	150	200		175	Si	DO4
19	F2B3	100	10	150C	200		175J	Si	DO5
20	SDR5004	120	10		200			Si#	DO4
21	SDR6004	120	10		300			Si#	DO4
22	SDR5005	140	10		200			Si#	DO4
23	SDR6005	140	10		300			Si#	DO4
24	BYV32-150	150	10		200		150J	$	TO220
25	BYX72-150	150	10	95B	100 §	10m	150J	Si	M754⊠
26	VHE1403	150	10	125	150	16m	175J	Si	Y220
27	1N2021	150	10	150C	110	8.3m	175C	Si	DO5
28	GEX542	160	10	25A	450	10	65J	Si	S16
29	1N2786	200	10		180		150A	Si	DO5⊠
30	BHC0002	200	10		300			Si	C251
31	BYV32-200	200	10		200		150J	$	TO220
32	D243	200	10				125C	SiΔ	S495
33	D243A	200	10				125C	SiΔ	S495
34	S2M	200	10.0		50			Si	A294h
35	1N2250	200	10	25$	200		150	SiΔ	DO4
36	1N2250A	200	10	25C	200		150	SiΔ	DO4
37	1N2251	200	10	25$	200		150	SiΔ	S35
38	1N2251A	200	10	25C	200		150	SiΔ	S35
39	1S1465	200	10	25	30		75J	Ge	TO66
40	S35A320FR	200	10	25A	200		150	Si	M1308
41	10A200	200	10	50C	200		175J	Si	DO4
42	SG5FR	200	10	60	250	10m	150S	Si	M650
43	SG-5FS	200	10	60	250	10m	150J	Si	M650
44	SG-6FS	200	10	60	250	10m	150J	SiΔ	M769
45	1N1622	200	10	100A	150	4.0m	100A	Si	S43
46	1S421	200	10	100B	200		175S	Si	S61Δ
47	BY239-200	200	10	100C	140	10m	140J	Si	TO220A
48	BYV95A	200	10	125J	35	10m	165J	Si	A333C
49	VHE1404	200	10	125	150	16m	175J	Si	Y220
50	1N250	200	10	150$			175S	Si	DO5
51	E6C3	200	10	150	200		175	Si	DO4
52	F2C3	200	10	150C	200		175J	Si	DO5
53	1SR19-250	250	10	100C	250	10m	120J	Si	M856⊠
54	PF125S	250	10	100	250	10m		Si	M586⊠
55	1N2022	250	10	150C	110	8.3m	175C	Si	DO5
56	E6D3	250	10	150	200		175	Si	DO4
57	F2D3	250	10	150C	200		175J	Si	DO5
58	BHC0003	300	10		300			Si	C251
59	D245	300	10				125C	SiΔ	S495
60	D245A	300	10				125C	SiΔ	S495
61	SDR6007	300	10		200			Si#	DO4
62	SDR7007	300	10		400			Si#	DO5
63	1N2252	300	10	25C	200		150	SiΔ	DO4
64	1N2252A	300	10	25C	200		150	SiΔ	DO4
65	1N2253	300	10	25$	200		150	SiΔ	S35
66	1N2253A	300	10	25C	200		150	SiΔ	S35
67	BYX72-300	300	10	95B	100 §	10m	150J	Si	M754⊠
68	1N1623	300	10	100A	150	4.0m	100A	Si	S43
69	S19C	300 %	10	124C	310	8.3m	150J	Si	S522
70	S20C	300 %	10	124C	280	10m	150J	Si	S522a
71	1N2023	300	10	150C	110	8.3m	175C	Si	DO5
72	E6E3	300	10	150	200		175	Si	DO4
73	F2E3	300	10	150C	200		175J	Si	DO5
74	1N2024	350	10	150C	110	8.3m	175C	Si	DO5
75	E6F3	350	10	150	200		175	Si	DO4
76	F2F3	350	10	150C	200		175J	Si	DO5
77	1N2787	400	10		180		150A	Si	DO5⊠
78	BHC0004	400	10		300			Si	C251
79	D246	400	10				125C	SiΔ	S495
80	D246A	400	10				125C	SiΔ	S495
81	KD206A	400	10		100	100u	125A	SiΔ	S478
82	S4M	400	10.0		50			Si	A294h
83	SDR6008	400	10		200			Si#	DO4
84	SDR7008	400	10		400			Si#	DO5
85	1N2254	400	10	25C	200		150	Si	DO4
86	1N2254A	400	10	25C	200		150	Si	DO4
87	1N2255	400	10	25$	200		150	SiΔ	S35
88	1N2255A	400	10	25C	200		150	SiΔ	S35
89	S35A340FR	400	10	25A	200		150	Si	M1308
90	10A400	400	10	50C	200		175J	Si	DO4
91	1N1624	400	10	100A	150	4.0m	100A	Si	S43
92	1S423	400	10	100B	200		175S	Si	S61Δ
93	1SR19-400	400	10	100C	250	10m	120J	Si	M856⊠
94	BY239-400	400	10	100C	140	10m	140J	Si	TO220A
95▼	D10N400B	400	10	100C	170 §	10m	150J	Si	S493C
96▼	D10N400C	400	10	100C	170 §	10m	150J	Si	S493b
97	PF140S	400	10	100	250	10m		Si	M586⊠
98	11R4S	400	10	120C	200		175J	SiΔ	S103
99	S19D	400 %	10	124C	310	8.3m	150J	Si	S522
100	S20D	400 %	10	124C	280	10m	150J	Si	S522a
101	BYV95B	400	10	125J	35	10m	165J	Si	A333C
102	DS6-04F	400	10	130C	180	10m	180J	Si	
103	1N2025	400	10	150C	110	8.3m	175C	Si	DO5
104	E6G3	400	10	150	200		175	Si	DO4
105	F2G3	400	10	150C	200		175J	Si	DO5
106	SDR6009	450	10		200			Si#	DO4
107	D247	500	10				125C	SiΔ	S495
108	KD206B	500	10		100	100u	125A	SiΔ	S478
109	1N2256	500	10	25C	200		150	SiΔ	DO4
110	1N2256A	500	10	25C	200		150	SiΔ	DO4
111	1N2257	500	10	25C	200		150	SiΔ	S35
112	1N2257A	500	10	25C	200		150	SiΔ	S35
113	BYX72-500	500	10	95B	100 §	10m	150J	Si	M754⊠
114	50J2P	500	10	100A	150	4.0m		Si	S43
115	11R5S	500	10	120C	200		175J	SiΔ	S103
116	S19E	500 %	10	124C	310	8.3m	150J	Si	S522
117	S20E	500 %	10	124C	280	10m	150J	Si	S522a
118	E6H3	500	10	150	200		175	Si	DO4
119	F2H3	500	10	150C	200		175J	Si	DO5
120	BHC0005	600	10		300			Si	C251
121	KD206V	600	10		100	100u	125A	SiΔ	S478
122	1N2258	600	10	25C	200		150	SiΔ	DO4
123	1N2258A	600	10	25C	200		150	SiΔ	DO4
124	1N2259	600	10	25$	200		150	SiΔ	S35
125	1N2259A	600	10	25C	200		150	SiΔ	S35
126	S35A360FR	600	10	25A	200		150	Si	M1308
127	S10VB60	600	10	40	200	1.0	150	Si	
128	10A600	600	10	50C	200		175J	Si	DO4
129	1S425	600	10	100B	200		175S	Si	S61Δ
130	60J2P	600	10	100A	150	4.0m		Si	S43
131	BY239-600	600	10	100C	140	10m	140J	Si	TO220A
132	SSiD0440	600	10	110C	125	10m	160J	SiΔ	S4pΔ
133	11R6S	600	10	120C	200		175J	SiΔ	S103
134	BYV95C	600	10	125J	35	10m	165J	Si	A333C
135	E6K3	600	10	150	200		175	Si	DO4
136	F2K3	600	10	150C	200		175J	Si	DO5
137	E6M3	700	10	150	200		175	Si	DO4
138	F2M3	700	10	150C	200		175J	Si	DO5
139	1N2260	800	10	25$	200		150	SiΔ	DO4
140	1N2260A	800	10	25C	200		150	SiΔ	DO4
141	1N2261	800	10	25$	200		150	SiΔ	S35
142	1N2261A	800	10	25C	200		150	SiΔ	S35
143	10A800	800	10	50C	200		175J	Si	DO4
144	RTF80	800	10	85C	140	10m	140J	Si	M774
145	1S427	800	10	100B	200		175S	SiΔ	S61Δ
146	BY239-800	800	10	100C	140	10m	140J	Si	TO220A
147▼	D10N800B	800	10	100C	170 §	10m	150J	Si	S493C
148▼	D10N800C	800	10	100C	170 §	10m	150J	Si	S493b
149	11R8S	800	10	120C	200		175J	SiΔ	S103
150	S19G	800 %	10	124C	310	8.3m	150J	Si	S522
151	S20G	800 %	10	124C	280	10m	150J	Si	S522a
152	BYV96D	800	10	125J	35	10m	165J	Si	A333C
153	DS6-08F	800	10	130C	180	10m	180J	Si	
154	E6N3	800	10	150	200		175	Si	DO4
155	F2N3	800	10	150C	200		175J	Si	DO5
156	SSiD0460	900	10	110C	125	10m	160J	SiΔ	S4pΔ
157	SSiD0460A	900	10	110C	125	10m	160J	SiΔ	S4pΔ
158	S30A05HE	50	10.5	25A	300		150	Si	M1307
159	S30A10HE	100	10.5	25A	300		150	Si	M1307
160	S30A15HE	150	10.5	25A	300		150	Si	M1307
161	DS9-04F	400	11	150C	250	10m	180J	Si	
162	DS9-08F	800	11	150C	250	10m	180J	Si	
163	S35A310	100	11.2	25A	250		150	Si	M1308
164	S35A320	200	11.2	25A	250		150	Si	M1308
165	S35A340	400	11.2	25A	250		150	Si	M1308
166	S35A360	600	11.2	25A	250		150	Si	M1308
167	S35A380	800	11.2	25A	250		150	Si	M1308
168	12F5	15	12	100A	150 §	10m	190J	SiΔ	DO4⊠
169	VSK12	20	12	25	140		150J	♦	Y220
170	USD820	20	12	115C	200	8.3m	150J	♦	M981
171	USD835	35	12	115C	200	8.3m	150J	♦	M981
172	USD840	40	12	115C	200	8.3m	150J	♦	M981
173	USD845	45	12	115C	200	8.3m	150J	♦	M981
174	12CTQ045	45	12	121C	135	6.0m	150J	♦	Y220b
175	T3889	50	12		200	8.3m	150J	Si	TO3
176	12A50	50	12	50C	250		175J	Si	DO4
177	CTN1205	50	12	50A	300		125A	Si	M594h *
178	CTP1205	50	12	50A	300		125A	Si	M594h *
179	5J3P	50	12	100A	150	4.0m	100A	Si	S23
180	MDA1200	50	12	100C	400		175J	Si	
181	UT8105	50	12	100C	200	8.3m	175A	Si	S277⊠
182	1S2434	50	12	120C	200	8.3m	150J	Si	S249a⊠
183	SR10L1S	50	12	120C	200		150J	Si	S249a
184	BYW88-50	50	12	125C	230	10m	150J	Si	DO4
185	1N1199	50 *	12	150C	100		190J	Si	S27
186	1N1199B	50	12	150C	250		150B	SiΔ	DO4Δ
187	1N1199C	50	12	150C	400		150C	Si	DO4⊠
188	1N2576	50	12	150C	250		150C	SiΔ	DO10
189	1N2587	50	12	150C	250		150C	SiΔ	DO10
190	1N2598	50	12	150C	250		150C	SiΔ	DO4
191	12F5B	50	12	150C	250		200J	Si	DO4⊠
192	E7A3	50	12	150	200		175	Si	DO4
193	MR1120	50	12	150C	300 §	8.3m	190J	SiΔ	DO4
194	R3100012	50	12	150	240	8.3m	200	Si	DO4
195	R3110012	50	12	150C	250	5.0m	200J	Δ	DO4
196	S20405	50	12	150C	200	8.3m	190J	SiΔ	S488⊠
197	S53A	65 %	12	117C	275	8.3m	150J	Si	S523
198	S54A	65 %	12	117C	250	10m	150J	Si	S523a
199	BYY20	75	12	175J	140		175J	SiΔ	M38
200	BYY21	75	12	175J	140		175J	SiΔ	M38a
201	S53T	95 %	12	117C	275	8.3m	150J	Si	S523
202	S54T	95 %	12	117C	250	10m	150J	Si	S523a
203	T3890	100	12		200	8.3m	150J	Si	TO3
204	12A100	100	12	50C	250		175J	Si	DO4
205	CTN121	100	12	50A	300		125A	Si	M594h *
206	CTP121	100	12	50A	300		125A	Si	M594h *
207	ST2-10	100	12	50A	260		175C	Si	S187c⊠
208	10J3P	100	12	100A	150	4.0m	100A	Si	S23
209	12F10	100	12	100A	150 §	10m	190J	SiΔ	DO4⊠
210	MDA1201	100	12	100C	400		175J	Si	
211	UT8110	100	12	100C	200	8.3m	175A	Si	S277⊠
212	1S2435	100	12	120C	200	8.3m	150J	Si	S249a⊠
213	SR10L2S	100	12	120C	200		150J	Si	S249a
214	BYW88-100	100	12	125C	230	10m	150J	Si	DO4
215	1N1200	100 *	12	150C	100		190J	Si	S27
216	1N1200B	100	12	150C	250		150B	SiΔ	DO4Δ
217	1N1200C	100	12	150C	400		150C	Si	DO4⊠
218	1N2577	100	12	150C	250		150C	SiΔ	DO10
219	1N2588	100	12	150C	250		150C	SiΔ	DO10
220	1N2599	100	12	150C	250		150C	SiΔ	DO10

SYMBOLS AND CODES
EXPLAINED IN INTERPRETER

5. GENERAL-PURPOSE RECTIFIERS - $I_O \geq 10$ A (Cont'd)

IN ORDER OF: (1) IO MAX (2) PIV
(3) ° TEMP & (4) TYPE NMBER

LINE No.	4 TYPE NUMBER	2 PIV (V)	MAX AVG FWD DC CURRENT 1 Io MAX (A)	3 @ TEMP (°C)	MAX RATING SURGE CURR PEAK 1 Cy (A)	PULSE WIDTH (s)	MAX. TEMP (°C)	MAT	DRAWING No.
1	12F10B	100	12	150C	250		200J	Si	DO4⊠
2	E7B3	100	12	150	200		175	Si	DO4
3	MR1121	100	12	150C	300 §	8.3m	190J	Si△	DO4
4	R3100112	100	12	150	240	8.3m	200	Si	DO4
5	R3110112	100	12	150C	250	5.0m	200J	△	DO4
6	S20410	100	12	150C	200	8.3m	190J	Si△	S488⊠
7	S53B	125 %	12	117C	275	8.3m	150J	Si	S523
8	S54B	125 %	12	117C	250	10m	150J	Si	S523a
9	12A150	150	12		240			Si	A313k
10	12CC12	150	12	50A	200	10m	150J	Si	S19n
11	12CD12	150	12	50A	200	10m	150J	Si	S19n
12	1N1201	150 *	12	150C	100		190J	Si	S27
13	1N1201B	150	12	150C	250		150B	Si	DO4△
14	1N1201C	150	12	150C	400		150C	Si	DO4⊠
15	S20415	150	12	150C	200	8.3m	190J	Si△	S488⊠
16	T3891	200	12		200	8.3m	150J	Si	TO3
17	12A200	200	12	50C	250		175J	Si	DO4
18	CTN122	200	12	50A	300		125A	Si	M594h *
19	CTP122	200	12	50A	300		125A	Si	M594h *
20	ST2-20	200	12	50A	260		175C	Si	S187c⊠
21	1N5326	200	12	100C	200 §		175C	Si	A185b
22	12F20	200	12	100A	150 §	10m	190J	Si△	DO4⊠
23	20J3P	200	12	100A	150	4.0m	100A	Si	S23
24	MDA1202	200	12	100C	400		175J	Si	
25	UT8120	200	12	100C	200	8.3m	175A	Si	S277⊠
26	1S2436	200	12	120C	200	8.3m	150J	Si	S249a⊠
27	SR10L4S	200	12	120C	200		150J	Si	S249a
28	BYW88-200	200	12	125C	230	10m	150J	Si	DO4
29	1N4506	200	12	135C	240		175C	Si	DO4
30	1N1202	200 *	12	150C	100		190J	Si	S27⊠
31	1N1202B	200	12	150C	250		150B	Si△	DO4△
32	1N1202C	200	12	150C	400		150C	Si	DO4⊠
33	1N2578	200	12	150C	250		150C	Si△	DO10
34	1N2589	200	12	150C	250		150C	Si△	DO10
35	1N2600	200	12	150C	250		150C	Si△	DO10
36	12F20B	200	12	150C	250		200J	Si	DO4⊠
37	E7C3	200	12	150	200		175	Si	DO4
38	MR1122	200	12	150C	300 §	8.3m	190J	Si△	DO4
39	R3100212	200	12	150	240	8.3m	200	Si	DO4
40	R3110212	200	12	150C	250	5.0m	200J	△	DO4
41	S20420	200	12	150C	200	8.3m	190J	Si△	S488⊠
42	E7D3	250	12	150	200		175	Si	DO4
43	S20425	250	12	150C	200	8.3m	190J	Si△	S488⊠
44	12A300	300	12		240			Si	A313k
45	T3892	300	12		200	8.3m	150J	Si	TO3
46	12FC12	300	12	50A	200	10m	150J	Si	S19n
47	12FD12	300	12	50A	200	10m	150J	Si	S19n
48	ST2-30	300	12	50A	260		175C	Si	S187c⊠
49	1N5410	300	12	100C	200 §		175C	Si	DO4
50	30J3P	300	12	100A	150	4.0m	100A	Si	S23
51	BYX42-300	300 %	12	115B	125	10m	175J	Si△	DO4⊠
52	1S2437	300	12	120C	200	8.3m	150J	Si	S249a⊠
53	SR10L6S	300	12	120C	200		150J	Si	S249a
54	BYW88-300	300	12	125C	230	10m	150J	Si	DO4
55	1N1203	300 *	12	150C	100		190J	Si	S27
56	1N1203B	300	12	150C	250		150B	Si△	DO4△
57	1N2579	300	12	150C	250		150C	Si△	DO10
58	1N2590	300	12	150C	250		150C	Si△	DO10
59	1N2601	300	12	150C	250		150C	Si△	DO10
60	E7E3	300	12	150	200		175	Si	DO4
61	MR1123	300	12	150C	300 §	8.3m	190J	Si△	DO4
62	R3100312	300	12	150	240	8.3m	200	Si	DO4
63	R3110312	300	12	150C	250	5.0m	200J	△	DO4
64	S20430	300	12	150C	200	8.3m	190J	Si△	S488⊠
65	E7F3	350	12	150	200		175	Si	DO4
66	S20435	350	12	150C	200	8.3m	190J	Si△	S488⊠
67	T3893	400	12		200	8.3m	150J	Si	TO3
68	12A400	400	12	50C	250		175J	Si	DO4
69	12GC11	400	12	50A	300		150J	Si	S19n
70	CTN124	400	12	50A	300		125A	Si	M594h *
71	CTP124	400	12	50A	300		125A	Si	M594h *
72	ST2-40	400	12	50A	260		175C	Si	S187c⊠
73	12F40	400	12	100A	150 §	10m	190J	Si△	DO4⊠
74	40J3P	400	12	100A	150	4.0m	100A	Si	S23
75	MDA1204	400	12	100C	400		175J	Si	
76	UT8140	400	12	100C	200	8.3m	175A	Si	S277⊠
77	1S1575	400	12	120C	200		150J	Si	S19n
78	1S2438	400	12	120C	200	8.3m	150J	Si	S249a⊠
79	SR10A8	400	12	120C	200 §	8.3m	150J	Si△	S19t
80	SR10L8S	400	12	120C	200		150J	Si	S249a
81	BYW88-400	400	12	125C	230	10m	150J	Si	DO4
82	1N4507	400	12	135C	240		175C	Si	DO4
83	1N1204	400 *	12	150C	100		190J	Si	S27⊠
84	1N1204B	400	12	150C	250		150B	Si△	DO4△
85	1N1204C	400	12	150C	400		150C	Si	DO4⊠
86	1N2580	400	12	150C	250		150C	Si△	DO10
87	1N2591	400	12	150C	250		150C	Si△	DO10
88	1N2602	400	12	150C	250		150C	Si△	DO10
89	12F40B	400	12	150C	250		200J	Si	DO4⊠
90	E7G3	400	12	150	200		175	Si	DO4
91	MR1124	400	12	150C	300 §	8.3m	190J	Si△	DO4
92	R3100412	400	12	150	240	8.3m	200	Si	DO4
93	R3110412	400	12	150C	250	5.0m	200J	△	DO4
94	S20440	400	12	150C	200	8.3m	190J	Si△	S488⊠
95	S20445	450	12	150C	200	8.3m	190J	Si△	S488⊠
96	12A500	500	12		240			Si	A313k
97	ST2-50	500	12	50A	260		175C	Si	S187c⊠
98	50J3P	500	12	100A	150	4.0m	100A	Si	S23
99	1S2439	500	12	120C	200	8.3m	150J	Si	S249a⊠
100	SR10A10	500	12	120C	200 §	8.3m	150J	Si△	S19t
101	SR10L10S	500	12	120C	200		150J	Si	S249a
102	BYW88-500	500	12	125C	230	10m	150J	Si	DO4
103	1N1205	500 *	12	150C	100		190J	Si	S27
104	1N1205B	500	12	150C	250		150B	Si△	DO4△
105	1N1205C	500	12	150C	400		150C	Si	DO4⊠
106	1N2581	500	12	150C	250		150C	Si△	DO10
107	1N2592	500	12	150C	250		150C	Si△	DO10
108	1N2603	500	12	150C	250		150C	Si△	DO10
109	E7H3	500	12	150	200		175	Si	DO4
110	MR1125	500	12	150C	300 §	8.3m	190J	Si△	DO4
111	R3100512	500	12	150	240	8.3m	200	Si	DO4
112	R3110512	500	12	150C	250	5.0m	200J	△	DO4
113	S20450	500	12	150C	200	8.3m	190J	Si△	S488⊠
114	12A6F1	600	12		150			Si	DO10
115	12A6F	600	12		200			Si	DO4
116	T12A6F	600	12		200	8.3m	150J	Si	TO3
117	12A600	600	12	50C	250		175J	Si	DO4
118	12JC11	600	12	50A	300		150J	Si	S19n
119	CTN126	600	12	50A	300		125A	Si	M594h *
120	CTP126	600	12	50A	300		125A	Si	M594h *
121	ST2-60	600	12	50A	260		175C	Si	S187c⊠
122	12F60	600	12	100A	150 §	10m	190J	Si△	DO4⊠
123	60J3P	600	12	100A	150	4.0m	100A	Si	S23
124	MDA1206	600	12	100C	400		175J	Si	
125	BYX42-600	600 %	12	115B	125	10m	175J	Si△	DO4⊠
126	1S1576	600	12	120C	200		150J	Si	S19n
127	SR10A12	600	12	120C	200 §	8.3m	150J	Si△	S19t
128	BYW88-600	600	12	125C	230	10m	150J	Si	DO4
129	1N4508	600	12	135C	240		175C	Si	DO4
130	1N1206	600 *	12	150C	100		190J	Si	S27⊠
131	1N1206B	600	12	150C	250		150B	Si△	DO4△
132	1N1206C	600	12	150C	400		150C	Si	DO4⊠
133	1N2582	600	12	150C	250		150C	Si△	DO10
134	1N2593	600	12	150C	250		150C	Si△	DO10
135	1N2604	600	12	150C	250		150C	Si△	DO10
136	12F60B	600	12	150C	250		200J	Si	DO4⊠
137	BY527	600	12	150C	250		150C	Si	S35
138	E7K3	600	12	150	200		175	Si	DO4
139	MR1126	600	12	150C	300 §	8.3m	190J	Si△	DO4
140	R3100612	600	12	150	240	8.3m	200	Si	DO4
141	R3110612	600	12	150C	250	5.0m	200J	△	DO4
142	S20460	600	12	150C	200	8.3m	190J	Si△	S488⊠
143	1N3670	700	12	100C	200		190A	Si	DO4
144	1N2583	700	12	150C	250		150C	Si△	DO10
145	1N2594	700	12	150C	250		150C	Si△	DO10
146	1N2605	700	12	150C	250		150C	Si△	DO10
147	1N4012	700	12	150C	200		175A	Si	DO4
148	E7M3	700	12	150	200		175	Si	DO4
149	R3100712	700	12	150C	250	5.0m	200J	△	DO4
150	R3110712	700	12	150C	250	5.0m	200J	△	DO4
151	1N5435	720	12	25A	200		175A	Si	S292
152	UT8160	720	12	25A	200		175A	Si	S292
153	12A8F1	800	12		150			Si	DO10
154	12A8F	800	12		200			Si	DO4
155	12A800	800	12	50C	250		175J	Si	DO4
156	12LC11	800	12	50A	300		150J	Si	S19n
157	CTN128	800	12	50A	300		125A	Si	M594h *
158	CTP128	800	12	50A	300		125A	Si	M594h *
159	ST2-80	800	12	50A	260		175C	Si	S187c⊠
160	1N3671	800	12	100C	200		190A	Si	DO4
161	12F80	800	12	100A	150 §	10m	190J	Si△	DO4⊠
162	1S1577	800	12	120C	200		150J	Si	S19n
163	SR10A16	800	12	120C	200 §	8.3m	150J	Si△	S19t
164	BYW88-800	800	12	125C	230	10m	150J	Si	DO4
165	1N4509	800	12	135C	240		175C	Si	DO4
166	12CF11	800	12	138C	240	10m	175J	Si	S4k
167	12LF11	800	12	138C	240	10m	175J	Si	S4k
168	1N2584	800	12	150C	250		150C	Si△	DO10
169	1N2595	800	12	150C	250		150C	Si△	DO10
170	1N2606	800	12	150C	250		150C	Si△	DO10
171	1N4013	800	12	150C	200		175A	Si	DO4
172	BY509	800	12	150C	250		150C	Si	S35
173	E7N3	800	12	150	200		175	Si	DO4
174	MR1128	800	12	150C	300 §	8.3m	190J	Si△	DO4
175	R3100812	800	12	150C	250	5.0m	200J	△	DO4
176	R3110812	800	12	150C	250	5.0m	200J	△	DO4
177	1N3672	900	12	100C	200		190A	Si	DO4
178	BYX42-900	900 %	12	115B	125	10m	175J	Si△	DO4⊠
179	1N2585	900	12	150C	250		150C	Si△	DO10
180	1N2596	900	12	150C	250		150C	Si△	DO10
181	1N2607	900	12	150C	250		150C	Si△	DO10
182	1N4014	900	12	150C	200		175A	Si	DO4
183	12A900	900	12	150C	240		200J	Si△	DO4
184	R3100912	900	12	150C	250	5.0m	200J	△	DO4
185	R3110912	900	12	150C	250	5.0m	200J	△	DO4
186	BYV20-30	30	12.5	110A	300	10m	125J	♦	DO4
187	BYV20-35	35	12.5	110A	300	10m	125J	♦	DO4
188	BYV20-40	40	12.5	110A	300	10m	125J	♦	DO4
189	BYS28-45	45	12.5	97C	250		125J	Si	M1221a*
190	S35A305HE	50	12.5	25A	300		150	Si	M1308
191	S50A05FR	50	12.5	25A	375		150	Si	M1309
192	BYS28-90	90	12.5	90C	150		125J	Si	M1221a*
193	S35A310HE	100	12.5	25A	300		150	Si	M1308
194	S50A10	100	12.5	25A	375		150	Si	M1309
195	S50A10FR	100	12.5	25A	375		150	Si	M1309
196	S35A315HE	150	12.5	25A	300		150	Si	M1308
197	S50A20	200	12.5	25A	375		150	Si	M1309
198	S50A20FR	200	12.5	25A	375		150	Si	M1309
199	VTE200	200	12.5	100C	250	8.3m	180J	Si△	M560e*
200	S50A40	400	12.5	25A	375		150	Si	M1309
201	S50A40FR	400	12.5	25A	375		150	Si	M1309
202	S50A60	600	12.5	25A	375		150	Si	M1309
203	S50A60FR	600	12.5	25A	375		150	Si	M1309
204	S50A80	800	12.5	25A	375		150	Si	M1309
205	SKDD20/02	200	12.7	70C	300		150J	Si	C238a
206	SKMD20/02	200	12.7	70C	300		150J	Si	C238b
207	SKND20/02	200	12.7	70C	300		150J	Si	C238c
208	D2020L	200	12.7	80C	225		110A	Si	Y220b
209	SKDD20/04	400	12.7	70C	300		150J	Si	C238a
210	SKMD20/04	400	12.7	70C	300		150J	Si	C238b
211	SKND20/04	400	12.7	70C	300		150J	Si	C238c
212	D4020L	400	12.7	80C	225		110A	Si	Y220b
213	SKDD20/06	600	12.7	70C	300		150J	Si	C238a
214	SKMD20/06	600	12.7	70C	300		150J	Si	C238b
215	SKND20/06	600	12.7	70C	300		150J	Si	C238c
216	D6020L	600	12.7	80C	225		110A	Si	Y220b
217	SKDD20/08	800	12.7	70C	300		150J	Si	C238a
218	SKMD20/08	800	12.7	70C	300		150J	Si	C238b
219	SKND20/08	800	12.7	70C	300		150J	Si	C238c
220♦	SCDA05F	50	14		80		150	Si	C236

SYMBOLS AND CODES
EXPLAINED IN INTERPRETER

5. GENERAL-PURPOSE RECTIFIERS - $I_O \geq 10$ A (Cont'd)

IN ORDER OF: (1) IO MAX (2) PIV
(3) * TEMP & (4) TYPE NMBER

LINE No.	4 TYPE NUMBER	2 PIV (V)	MAX AVG FWD DC CURRENT 1 Io MAX (A)	3 @ TEMP (°C)	MAX RATING SURGE CURR PEAK 1 Cy (A)	PULSE WIDTH (s)	MAX. TEMP (°C)	MAT	DRAWING No.
1♦	SCNA05F	50	14		80		150	Si	C236
2♦	SCPA05F	50	14		80		150	Si	C236
3	BYV79-50	50	14	115A	200	10m	150J	Si	TO220A
4♦	SCDA1F	100	14		80		150	Si	C236
5♦	SCNA1F	100	14		80		150	Si	C236
6	BYV79-100	100	14	115A	200	10m	150J	Si	TO220A
7	BYV79-150	150	14	115A	200	10m	150J	Si	TO220A
8	SCDA2F	200	14	55C	80		150	Si	C236
9	SCNA2F	200	14	55C	80		150	Si	C236
10	SCPA2F	200	14	55C	80		150	Si	C236
11	BYV79-200	200	14	115A	200	10m	150J	Si	TO220A
12	BYT79-300	300	14	113A	320	20u	150J	Si	TO220A
13	BYT79-400	400	14	113A	320	20u	150J	Si	TO220A
14	BYT79-500	500	14	113A	320	20u	150J	Si	TO220A
15	BYX99-900	900	14	125B	160 §	10m	175J	Si△	DO4⊘
16	MBR320M	20	15	65C	500		125J	Si$	A179c
17	MBR330M	30	15	65C	500		125J	Si$	A179c
18	MBR1535	35	15		500		125J	♦	DO4
19	MBR1535CT	35	15	105C	150	8.3m	150J	♦	Y220ab
20	G15R4	40	15		300		110	Ge	A41d
21	MBR340M	40	15	65C	500		125J	Si$	A179c
22	MBR1545CT	45	15	105C	150	8.3m	150J	♦	Y220ab
23	MBR3045CT	45	15	105C	400	8.3m	150J	♦	TO3
24	MBR3045HI	45	15	105C	400		150J	♦	TO3*
25	BYS15	45	15	113C	315	8.3m	150J	Si	S19t
26	PMR27K050	50	15		250	8.3m	200J	Si	C63k⊘
27	PMR31K050	50	15		250		200	Si	TO3
28	R305	50	15		50		200J	Si	S457⊘
29	R705	50	15		250		200J	Si	S457⊘
30	SR710	50	15		250	8.3m	150J	Si	TO3
31	SR710F	50	15		150	8.3m	150J	Si	TO3
32	15A50	50	15	50C	250		175J	Si	DO4
33	15IP005	50	15	55C	300	8.3m	150J	Si	M1021 *
34	1N1076	50	15	100A	150 §	4.0m	170C	Si	S68d
35	1S2428	50	15	115C	200	8.3m	150J	Si	C112⊘
36	BYS80	50	15	148C	600		175J	Si	TO3*
37	1N3208	50	15	150C	250	8.3m	175C	Si	S4n
38	BYS79	60	15	148C	600		175J	Si	TO3*
39	1SM15	80	15		300			Si	S513
40	1S770	100	15		140		150A	Si	
41	1S770R	100	15		140		150A	Si	
42	PMR27K100	100	15		250	8.3m	200J	Si	C63k⊘
43	PMR31K100	100	15		250		200	Si	TO3
44	R310	100	15		50		200J	Si	S457⊘
45	R710	100	15		250		200J	Si	S457⊘
46	SR711	100	15		250	8.3m	150J	Si	TO3
47	SR711F	100	15		150	8.3m	150J	Si	TO3
48	PFR115N	100	15	25	250	10m	175J	Si	TO3⊘*
49	PHR115N	100	15	25	300	10m	175J	Si	TO3⊘
50	15A100	100	15	50C	250		175J	Si	DO4
51	681-1D	100	15	55C	150	8.3m	150	Si	C238a
52	681-1N	100	15	55C	150	8.3m	150	Si	C238c
53	681-1P	100	15	55C	150	8.3m	150	Si	C238b
54	6MA10	100	15	71C	200	10m	150J	Si	S29d
55	15B4B41	100	15	85C	250	10m	150J	Si	M972
56	1N1077	100	15	100A	150 §	4.0m	170C	Si	S68d
57	10Q3	100	15	100A	150		150	Si	S68
58	R711	100	15	100C	250	8.3m	150J	Si	TO3⊘⊘
59	6M10	100	15	107B	200	10m	150A	Si	S4z
60	1S2429	100	15	115C	200	8.3m	150J	Si	C112⊘
61	1S1640	100	15	120C	200		150J	Si	M383⊘
62	1N3209	100	15	150C	250	8.3m	175C	Si	S4n
63	ISOPAC1211	150	15	55C	150		175J	Si	M1265 *
64	ISOPACO111	150	15	55C	150		175J	Si	M1260 *
65	ISOPACO211	150	15	55C	150		175J	Si	M1261 *
66	ISOPACO411	150	15	55C	150		175J	Si	M1262 *
67	ISOPACO611	150	15	55C	150		175J	Si	M1264 *
68	SET010211	150	15	55C	150		175J	Si	M1270 *
69	SET031011	150	15	55C	150		175J	Si	M1266 *
70	1N1078	150	15	100A	150 §	4.0m	170C	Si	S68d
71	15Q3	150	15	100A			150	Si	S68
72	15CC11	150	15	120C	250	10m	150J	Si	M80c
73	15CD11	150	15	120C	250	10m	150J	Si	M80c
74	2SM15	160	15		300			Si	S513
75	PMR27K200	200	15		250	8.3m	200J	Si	C63k⊘
76	PMR31K200	200	15		250		200	Si	TO3
77	R320	200	15		50		200J	Si	S457⊘
78	R720	200	15		250		200J	Si	S457⊘
79	SR712F	200	15		150	8.3m	150J	Si	TO3
80	PFR215N	200	15	25	250	10m	175J	Si	TO3⊘*
81	PHR215N	200	15	25	300	10m	175J	Si	TO3⊘
82	15A200	200	15	50C	250		175J	Si	DO4
83	15IP02	200	15	55C	300	8.3m	150J	Si	M1021 *
84	681-2D	200	15	55C	150	8.3m	150	Si	C238a
85	681-2N	200	15	55C	150	8.3m	150	Si	C238c
86	681-2P	200	15	55C	150	8.3m	150	Si	C238b
87	SCDA2	200	15	55A	300		150A	Si	C236
88	SCNA2	200	15	55A	300		150A	Si	C236
89	SCPA2	200	15	55A	300		150A	Si	C236
90	6MA20	200	15	71C	200	10m	150J	Si	S29d
91	15D4B41	200	15	85C	250	10m	150J	Si	M972
92	1N1079	200	15	100A	150 §	4.0m	170C	Si	S68d
93	20Q3	200	15	100A	150	4.0m	150	Si	S68
94	R702	200	15	100C	250	8.3m	150J	Si	TO3⊘⊘
95	R712	200	15	100C	250	8.3m	150J	Si	TO3⊘⊘
96	6M20	200	15	107B	200	10m	150A	Si	S4z
97	1S2430	200	15	115C	200	8.3m	150J	Si	C112⊘
98	1S2464	200	15	120	200	10m	150J	Si	1 †
99	BYY22	200	15	135C	100 §	1	150J	Si	S72c
100	BYY23	200	15	135C	100 §	1	150J	Si	S72c
101	1N3210	200	15	150C	250	8.3m	175C	Si	S4n
102	SR713	300	15		250	8.3m	150J	Si	TO3
103	SR713F	300	15		150	8.3m	150J	Si	TO3
104	681-3D	300	15	55C	150	8.3m	150	Si	C238a
105	681-3N	300	15	55C	150	8.3m	150	Si	C238c
106	681-3P	300	15	55C	150	8.3m	150	Si	C238b
107	1N1080	300	15	100A	150 §	4.0m	170C	Si	S68d
108	30Q3	300	15	100A			150	Si	S68
109	6M30	300	15	107C	200	10m	150J	Si	S29d
110	1S2431	300	15	115C	200	8.3m	150J	Si	C112⊘
111	15FC11	300	15	120C	250	10m	150J	Si	M80c
112	15FD11	300	15	120C	250	10m	150J	Si	M80c
113	BYX99-300	300	15	129B	180 §	10m	175J	Si△	DO4⊘
114	1N3211	300	15	150C	250	8.3m	175C	Si	S4n
115	4SM15	320	15		300			Si	S513
116	R740	400	15		250		200J	Si	S457⊘
117	SR714	400	15		250	8.3m	150J	Si	TO3
118	SR714F	400	15		150	8.3m	150J	Si	TO3
119	15A400	400	15	50C	250		175J	Si	DO4
120	15IP04	400	15	55C	300	8.3m	150J	Si	M1021 *
121	681-4D	400	15	55C	150	8.3m	150	Si	C238a
122	681-4N	400	15	55C	150	8.3m	150	Si	C238c
123	681-4P	400	15	55C	150	8.3m	150	Si	C238b
124	ISOPAC1204	400	15	55C	150		175J	Si	M1265 *
125	ISOPACO104	400	15	55C	150		175J	Si	M1260 *
126	ISOPACO204	400	15	55C	150		175J	Si	M1261*
127	ISOPACO404	400	15	55C	150		175J	Si	M1262 *
128	ISOPACO604	400	15	55C	150		175J	Si	M1264 *
129	SCDA4	400	15	55A	300		150A	Si	C236
130	SCNA4	400	15	55A	300		150A	Si	C236
131	SCPA4	400	15	55A	300		150A	Si	C236
132	SET010204	400	15	55C	150		175J	Si	M1270 *
133	6MA40	400	15	71C	200	10m	150J	Si	S29d
134	15G4B41	400	15	85C	250	10m	150J	Si	M972
135	40Q3	400	15	100A	150	4.0m	150	Si	S68
136	40Q4	400	15	100A	150	4.0m	150	Si	S68
137	R704	400	15	100C	250	8.3m	150J	Si	TO3⊘⊘
138	R714	400	15	100C	250	8.3m	150J	Si	TO3⊘⊘
139	6M40	400	15	107B	200	10m	150A	Si	S4z
140	1S2432	400	15	115C	200	8.3m	150J	Si	C112⊘
141	1N3212	400	15	150C	250	8.3m	175C	Si	S4n
142	BYY24	400	15	150J	200 §	10m	150J	Si△	S72c
143	BYY25	400	15	150J	200 §	10m	150J	Si△	S72d
144	SET031004	450	15	55C	150		175J	Si	M1266 *
145	6SM15	480	15		300			Si	S513
146	681-5D	500	15	55C	150	8.3m	150	Si	C238a
147	681-5N	500	15	55C	150	8.3m	150	Si	C238c
148	681-5P	500	15	55C	150	8.3m	150	Si	C238b
149	1S2433	500	15	115C	200	8.3m	150J	Si	C112⊘
150	1N3213	500	15	150C	350		175A	Si	S4h
151	R760	600	15		250		200J	Si	S457⊘
152	SR716	600	15		250	8.3m	150J	Si	TO3
153	SR716F	600	15		150	8.3m	150J	Si	TO3
154	S15VB60	600	15	40	200	1.0	150	Si	
155	15A600	600	15	50C	250		175J	Si	DO4
156	15IP06	600	15	55C	300	8.3m	150J	Si	M1021 *
157	681-6D	600	15	55C	150	8.3m	150	Si	C238a
158	681-6N	600	15	55C	150	8.3m	150	Si	C238c
159	681-6P	600	15	55C	150	8.3m	150	Si	C238b
160	SCDA6	600	15	55A	300		150A	Si	C236
161	6MA60	600	15	71C	200	10m	150J	Si	S29d
162	15J4B41	600	15	85C	250	10m	150J	Si	M972
163	R706	600	15	100C	250	8.3m	150J	Si	TO3⊘⊘
164	R716	600	15	100C	250	8.3m	150J	Si	TO3⊘⊘
165	6M60	600	15	107B	200	10m	150A	Si	S4z
166	BYX99-600	600	15	129B	180 §	10m	175J	Si△	DO4⊘
167	1N3214	600	15	150C	350		175A	Si	S4h
168	8SM15	640	15		300			Si	S513
169	10SM15	800	15		300			Si	S513
170	R780	800	15		250		200J	Si	S457⊘
171	15A800	800	15	50C	250		175J	Si	DO4
172	15IP08	800	15	55C	300	8.3m	150J	Si	M1021 *
173	6MA80	800	15	71C	200	10m	150J	Si	S29d
174	6M80	800	15	107B	200	10m	150A	Si	S4z
175	368V	900	15	125C	240	8.3m	180J	Si	DO4
176	USD920	20	16	115C	250	8.3m	150J	♦	M981
177	USD935	35	16	115C	250	8.3m	150J	♦	M981
178	MBR1635	35	16	125C	150	8.3m	150J	♦	Y220AC
179	USD940	40	16	115C	250	8.3m	150J	♦	M981
180	USD945	45	16	115C	250	8.3m	150J	♦	M981
181	MBR1645	45	16	125C	150	8.3m	150J	♦	Y220AC
182	FE16A	50	16	25A	200	8.3m	150J	Si$	Y220a
183▼	S16-050	50	16	50	300		175J	Si	u5d
184	16F5	50	16	100B	350	10m	190	Si	DO4
185	SGI5401C	50	16	125C	200	8.3m	150J	Si	Y220AB*
186	S2005	50	16	126C	200	8.3m	190J	Si△	S488⊘
187	BYW51-50	50	16	130C	100	10m	150J	Si	Y220
188	1N3615	50	16	150C	300	8.3m	200C	Si	DO4
189	R3100016	50	16	150C	300	5.0m	200J	△	DO4
190	R3110016	50	16	150C	300	5.0m	200J	△	DO4
191	FE16B	100	16	25A	200	8.3m	150J	Si$	Y220a
192▼	S16-100	100	16	50	300		175J	Si	u5d
193	SCNA10FF	100	16	55A	100		175J	Si	C236
194	SCPA10FF	100	16	55A	100		175J	Si	C236
195	16F10	100	16	100B	350	10m	190	Si	DO4
196	M16-100	100	16	120C	230 §	10m	175S	Si	DO4⊘
197	SGI5402C	100	16	125C	200	8.3m	150J	Si	Y220AB*
198	S2010	100	16	126C	200	8.3m	190J	Si△	S488⊘
199	BYW51-100	100	16	130C	100	10m	150J	Si	Y220
200	M16-100R	100	16	135A	230		175J	Si	DO4
201	1N3616	100	16	150C	300	8.3m	200C	Si	DO4
202	R3100116	100	16	150C	300	5.0m	200J	△	DO4
203	R3110116	100	16	150C	300	5.0m	200J	△	DO4
204	FE16C	150	16	25A	200	8.3m	150J	Si$	Y220a
205	SGI5403C	150	16	125C	200	8.3m	150J	Si	Y220AB*
206	S2015	150	16	126C	200	8.3m	190J	Si△	S488⊘
207	BYW51-150	150	16	130C	100	10m	150J	Si	Y220
208	1N3617	150	16	150C	300	8.3m	200C	Si	DO4
209	FE16D	200	16	25A	200	8.3m	150J	Si$	Y220a
210▼	S16-200	200	16	50	300		175J	Si	u5d
211	16F20	200	16	100B	350	10m	190	Si	DO4
212	M16-200	200	16	120C	230 §	10m	175S	Si	DO4⊘
213	SGI5404C	200	16	125C	200	8.3m	150J	Si	Y220AB*
214	S2020	200	16	126C	200	8.3m	190J	Si△	S488⊘
215	M16-200R	200	16	135A	230		175J	Si	DO4
216	1N3618	200	16	150C	300	8.3m	200C	Si	DO4
217	R3100216	200	16	150C	300	5.0m	200J	△	DO4
218	R3110216	200	16	150C	300	5.0m	200J	△	DO4
219	S2025	250	16	126C	200	8.3m	190J	Si	S488⊘
220	FE16F	300	16	25A	200	8.3m	150J	Si$	Y220a

SYMBOLS AND CODES
EXPLAINED IN INTERPRETER

5. GENERAL-PURPOSE RECTIFIERS - $I_O \geq 10$ A (Cont'd)

IN ORDER OF: (1) IO MAX (2) PIV (3) ° TEMP & (4) TYPE NMBER

LINE No.	4 TYPE NUMBER	2 PIV (V)	MAX AVG FWD DC CURRENT 1 Io MAX (A)	3 @ TEMP (°C)	MAX RATING SURGE CURR PEAK 1 Cy (A)	PULSE WIDTH (s)	MAX. TEMP (°C)	MAT	DRAWING No.
1	S2030	300	16	126C	200	8.3m	190J	Si△	S488⊘
2	1N3619	300	16	150C	300	8.3m	200C	Si	DO4
3	R3100316	300	16	150C	300	5.0m	200J	△	DO4
4	R3110316	300	16	150C	300	5.0m	200J	△	DO4
5	S2035	350	16	126C	200	8.3m	190J	Si	S488⊘
6	FE16G	400	16	25A	200	8.3m	150J	Si$	Y220a
7	TG284	400	16	25A	100		150J	Si	Y220AB
8▼	S16-400	400	16	50	300		175J	Si	u5d
9	16F40	400	16	100B	350	10m	190	Si	DO4
10	M16-400	400	16	120C	230 §	10m	175S	Si	DO4⊘
11	S2040	400	16	126C	200	8.3m	190J	Si△	S488⊘
12	M16-400R	400	16	135A	230		175J	Si	DO4
13	1N3620	400	16	150C	300	8.3m	200C	Si	DO4
14	R3100416	400	16	150C	300	5.0m	200J	△	DO4
15	R3110416	400	16	150C	300	5.0m	200J	△	DO4
16	S2045	450	16	126C	200	8.3m	190J	Si△	S488⊘
17	S2050	500	16	126C	200	8.3m	190J	Si△	S488⊘
18	1N3621	500	16	150C	300	8.3m	200C	Si	DO4
19	R3100516	500	16	150C	300	5.0m	200J	△	DO4
20	R3110516	500	16	150C	300	5.0m	200J	△	DO4
21	TG286	600	16	25A	100		150J	Si	Y220AB
22▼	S16-600	600	16	50	300		175J	Si	u5d
23	16F60	600	16	100B	350	10m	190	Si	DO4
24	M16-600	600	16	120C	230 §	10m	175S	Si	DO4⊘
25	S2060	600	16	126C	200	8.3m	190J	Si△	S488⊘
26	M16-600R	600	16	135A	230		175J	Si	DO4
27	MZ16-600	600	16	135C	230		175J	Si	DO4
28	MZ16-600R	600	16	135C	230		175J	Si	DO4
29	1N3622	600	16	150C	300	8.3m	200C	Si	DO4
30	R3100616	600	16	150C	300	5.0m	200J	△	DO4
31	R3110616	600	16	150C	300	5.0m	200J	△	DO4
32	R3110816	600	16	150C	300	5.0m	200J	△	DO4
33	S2070	700	16	126C	200	8.3m	190J	Si△	S488⊘
34	R3100716	700	16	150C	300	5.0m	200J	△	DO4
35	R3110716	700	16	150C	300	5.0m	200J	△	DO4
36	TG288	800	16	25A	100		150J	Si	Y220AB
37▼	S16-800	800	16	50	300		175J	Si	u5d
38	16F80	800	16	100B	350	10m	190	Si	DO4
39	M16-800	800	16	120C	230 §	10m	175S	Si	DO4⊘
40	S2080	800	16	126C	200	8.3m	190J	Si△	S488⊘
41	M16-800R	800	16	135A	230		175J	Si	DO4
42	MZ16-800	800	16	135C	230		175J	Si	DO4
43	MZ16-800R	800	16	135C	230		175J	Si	DO4
44	1N3623	800	16	150C	300	8.3m	200C	Si	DO4
45	R3100816	800	16	150C	300	5.0m	200J	△	DO4
46	S2090	900	16	126C	200	8.3m	190J	Si△	S488⊘
47	R3100916	900	16	150C	300	5.0m	200J	△	DO4
48	R3110916	900	16	150C	300	5.0m	200J	△	DO4
49▼	S16-1000	1.0k	16	50	300		175J	Si	u5d
50▼	S16-1200	1.2k	16	50	300		175J	Si	u5d
51	SW02PCN012	200	17	100C	210 §	10m	150J	Si	DO4⊘
52	SW04PCN012	400	17	100C	210 §	10m	150J	Si	DO4⊘
53	SW06PCN012	600	17	100C	210 §	10m	150J	Si	DO4⊘
54	SSCDA8	800	17	55C	150		150A	Si	M1245
55	SW08PCN012	800	17	100C	210 §	10m	150J	Si	DO4⊘
56	SKKD15-02	200	17.5	96C	320	10m	125J	Si	M1055
57	SKKE15-02	200	17.5	96C	320	10m	125J	Si	M1056
58	SKKD15-04	400	17.5	96C	320	10m	125J	Si	M1055
59	SKKE15-04	400	17.5	96C	320	10m	125J	Si	M1056
60	SKKD15-06	600	17.5	96C	320	10m	125J	Si	M1055
61	SKKE15-06	600	17.5	96C	320	10m	125J	Si	M1056
62	SKKD15-08	800	17.5	96C	320	10m	125J	Si	M1055
63	SKKE15-08	800	17.5	96C	320	10m	125J	Si	M1056
64	DD6520(A)	50	18					Si	
65	S5978A,9A	50	18				150C	Si	A1ss#
66	DD5620H	50	18	140C	200	10m	175J	Si△	M776⊘
67	DD5620S	50	18	140C	200	10m	175J	Si△	M775⊘
68	DD5620V	50	18	140C	200	10m	175J	Si△	M777⊘
69	1N1191	50 *	18	150C	125		190J	Si	S29
70	S5978B,9B	100	18				150C	Si	A1ss#
71	DD5621H	100	18	140C	200	10m	175J	Si△	M776⊘
72	DD5621S	100	18	140C	200	10m	175J	Si△	M775⊘
73	DD5621V	100	18	140C	200	10m	175J	Si△	M777⊘
74	S5978D,9D	200	18				150C	Si	A1ss#
75	DD6523(A)	200	18	25			200J	Si	
76	DD5623H	200	18	140C	200	10m	175J	Si△	M776⊘
77	DD5623S	200	18	140C	200	10m	175J	Si△	M775⊘
78	DD5623V	200	18	140C	200	10m	175J	Si△	M777⊘
79	S5978E,9E	300	18				150C	Si	A1ss#
80	S5978F,9F	400	18				150C	Si	A1ss#
81	DD6526(A)	400	18	25			200J	Si	
82	DD5626H	400	18	140C	200	10m	175J	Si△	M776⊘
83	DD5626S	400	18	140C	200	10m	175J	Si△	M775⊘
84	DD5626V	400	18	140C	200	10m	175J	Si△	M777⊘
85	S5978G,9G	500	18				150C	Si	A1ss#
86	S5978H,9H	600	18				150C	Si	A1ss#
87	NCR20-600	6	20	55C	240			Si	M1024
88	1N3372	10	20	100C	200	8.3m	200C	Si	M959
89	1N3373	25	20	100C	200	8.3m	200C	Si	M959
90	20CTQ30	30	20	110C	260	6.0m	150J	♦	Y220b
91	20CTQ35	35	20	110C	260	6.0m	150J	♦	Y220b
92	MBR2035CT	35	20	135C	150	8.3m	150J	♦	Y220AB
93	20CTQ40	40	20	110C	260	6.0m	150J	♦	Y220b
94	20CTQ45	45	20	110C	260	6.0m	150J	♦	Y220b
95	MBR2045CT	45	20	135C	150	8.3m	150J	♦	Y220AB
96	T3899	50	20		250	8.3m	150J	Si	TO3
97	20A50	50	20	50C	300		175J	Si	DO4
98	804-1D	50	20	55C	250	8.3m	150	Si	C238a
99	804-1N	50	20	55C	250	8.3m	150	Si	C238c
100	804-1P	50	20	55C	250	8.3m	150	Si	C238b
101	NCR20-50	50	20	55C	240			Si	M1024
102	SSCDA05HE	50	20	55C	150		150A	Si	M1245
103	1N3374	50	20	100C	200	8.3m	200C	Si	M959
104	21R05S	50	20	120C	400		175	Si△	S102
105	VHE2401	50	20	125	150	16m	175J	Si	Y220
106	MR2000S	50	20	150C	400		175J	Si△	DO4
107	1N248C	55	20	150C	350		175C	Si△	DO5△
108	PR5400	100	20		100	10m		Si	A344ac
109	T3900	100	20		250	8.3m	150J	Si	TO3
110	1S1288	100	20	50A				Si	⊘
111	20A100	100	20	50C	300		175J	Si	DO4
112	S20-01	100	20	50A	600	10m	150J	Si	S19p
113	804-2D	100	20	55C	250	8.3m	150	Si	C238a
114	804-2N	100	20	55C	250	8.3m	150	Si	C238c
115	804-2P	100	20	55C	250	8.3m	150	Si	C238b
116	NCR20-100	100	20	55C	240			Si	M1024
117	SSCDA10HE	100	20	55C	150		150A	Si	M1245
118	FC210S	100	20	90	200	10m		Si	M1099⊘
119	1N3375	100	20	100C	200	8.3m	200C	Si	M959
120	1S1641	100	20	120C	300		150J	Si	M383⊘
121	VHE2402	100	20	125	150	16m	175J	Si	Y220
122	1N249B	100	20	150C	350		175J	Si	DO5
123	MR2001S	100	20	150C	400		175J	Si△	DO4
124	S1AN21	100	20	200B	150		250J	Si	S324⊘
125	1N249C	110	20	150C	350		175C	Si△	DO5△
126	804-3D	125	20	55C	250	8.3m	150	Si	C238a
127	804-3N	125	20	55C	250	8.3m	150	Si	C238c
128	804-3P	125	20	55C	250	8.3m	150	Si	C238b
129	804-4D	150	20	55C	250	8.3m	150	Si	C238a
130	804-4N	150	20	55C	250	8.3m	150	Si	C238c
131	SSCDA15HE	150	20	55C	150		150A	Si	M1245
132	1N3376	150	20	100C	200	8.3m	200C	Si	M959
133	VHE2403	150	20	125	150	16m	175J	Si	Y220
134	PR5401	200	20		100	10m		Si	A344ac
135	T3901	200	20		250	8.3m	150J	Si	TO3
136	20A200	200	20	50C	300		175J	Si	DO4
137	S20-02	200	20	50A	600	10m	150J	Si	S19p
138	NCR20-200	200	20	55C	240			Si	M1024
139	DS19C	200	20	98C	440	8.3m	150J	Si	S523
140	DS20C	200	20	98C	400	10m	150J	Si	S523a
141	1N3377	200	20	100C	200	8.3m	200C	Si	M959
142	SG5	200	20	120C	250	10m	150S	Si	M650
143	SG6	200	20	120C	250	10m	150S	Si	M1152
144	SKR26/02	200	20	125C	350	8.3m	180A	Si	DO4
145	VHE2404	200	20	125	150	16m	175J	Si	Y220
146	MR2002S	200	20	150C	400		175J	Si△	DO4
147	S2AN21	200	20	200B	150		250J	Si	S324⊘
148	1N250C	220	20	150C	350		175C	Si	DO5△
149	FC225S	250	20	90	200	10m		Si	M1099⊘
150	PR5402	300	20		100	10m		Si	A344ac
151	T3902	300	20		250	8.3m	150J	Si	TO3
152	NCR20-300	300	20	55C	240			Si	M1024
153	1N3378	300	20	100C	200	8.3m	200C	Si	M959
154	Q19C	300 %	20	100C	440	8.3m	150J	Si	S522
155	Q20C	300 %	20	100C	400	10m	150J	Si	S522a
156	BYV34-300	300	20	113A	240	20u	150J	Si	Y220AB*
157	1N1195A	300	20	150C	350		175C	Si△	DO5△
158	1N2282	300	20	150C	400	8.3m	150C	Si	DO5
159	S3AN21	300	20	200B	150		250J	Si	S324⊘
160	PR5403	400	20		100	10m		Si	A344ac
161	T3903	400	20		250	8.3m	150J	Si	TO3
162	20A400	400	20	50C	300		175J	Si	DO4
163	S20-04	400	20	50A	600	10m	150J	Si	S19p
164	NCR20-400	400	20	55C	240			Si	M1024
165	FC240S	400	20	90	200	10m		Si	M1099⊘
166	DS19E	400	20	98C	440	8.3m	150J	Si	S523
167	DS20E	400	20	98C	400	10m	150J	Si	S523a
168	1N3379	400	20	100C	200	8.3m	200C	Si	M959
169	BYX13-400	400	20	100C	600	10m	150J	Si	S72c⊘
170	Q19D	400 %	20	100C	440	8.3m	150J	Si	S522
171	Q20D	400 %	20	100C	400	10m	150J	Si	S522a
172	BYV34-400	400	20	113A	240	20u	150J	Si	Y220AB*
173	21R4S	400	20	120C	400		175	Si△	S102
174	SG5AR	400	20	120C	250	10m	150S	Si	M650
175	SG5AS	400	20	120C	250	10m	150S	Si	M650
176	SG6AR	400	20	120C	250	10m	150S	Si	M1152
177	SG6AS	400	20	120C	250	10m	150S	Si	M1152
178	BYY16	400	20	125A	320 §	1	150J	Si	S72j
179	SKR26/04	400	20	125C	350	8.3m	180A	Si	DO4
180	1N1196A	400	20	150C	350		175C	Si△	DO5△
181	1N2283	400	20	150C	400	8.3m	150C	Si	DO5
182	MR2004S	400	20	150C	400		175J	Si△	DO4
183	S4AN21	400	20	200B	150		250J	Si	S324⊘
184	PR5404	500	20		100	10m		Si	A344ac
185	1N3380	500	20	100C	200	8.3m	200C	Si	M959
186	Q19E	500 %	20	100C	440	8.3m	150J	Si	S522
187	Q20E	500 %	20	100C	400	10m	150J	Si	S522a
188	BYV34-500	500	20	113A	240	20u	150J	Si	Y220AB*
189	21R5S	500	20	120C	400		175	Si△	S102
190	1N1197A	500	20	150C	350		175C	Si△	DO5△
191	1N2284	500	20	150C	400	8.3m	150C	Si	DO5
192	S5AN21	500	20	200B	150		250J	Si	S324⊘
193	20A6F	600	20		250			Si	DO5
194	PR5405	600	20		100	10m		Si	A344ac
195	T20A6F	600	20		250	8.3m	150J	Si	TO3
196	20A600	600	20	50C	300		175J	Si	DO4
197	S20-06	600	20	50A	600	10m	150J	Si	S19p
198	DS19G	600	20	98C	440	8.3m	150J	Si	S523
199	DS20G	600	20	98C	400	10m	150J	Si	S523a
200	21PT60	600 *	20	100B	360 §	8.3m	170J	Si	M471
201	21R6S	600	20	120C	400		175	Si△	S102
202	SG5BR	600	20	120C	250	10m	150S	Si	M650
203	SG5BS	600	20	120C	250	10m	150S	Si	M650
204	SG6BR	600	20	120C	250	10m	150S	Si	M1152
205	SG6BS	600	20	120C	250	10m	150S	Si	M1152
206	BYX25-600	600	20	125B	360 §	10m	175J	Si	DO4⊘
207	1N1198A	600	20	150C	350		175C	Si△	DO5
208	1N2285	600	20	150C	400	8.3m	150C	Si	DO5
209	MR2006S	600	20	150C	400		175J	Si△	DO4
210	S6AN21	600	20	200B	150		250J	Si	S324⊘
211	SSiE2040	650	20	85C	250	10m	160J	Si△	S4p△
212	20A8F	800	20		250			Si	DO5
213	PR5406	800	20		100	10m		Si	A344ac
214	20A800	800	20	50C	300		175J	Si	DO4
215	S20-08	800	20	50A	600	10m	150J	Si	S19p
216	NCR20-800	800	20	55C	240			Si	M1024
217	DS19J	800	20	98C	440	8.3m	150J	Si	S523
218	DS20J	800	20	98C	400	10m	150J	Si	S523a
219	BYX13-800	800	20	100C	600	10m	150J	Si	S72c⊘
220	Q19G	800 %	20	100C	440	8.3m	150J	Si	S522

SYMBOLS AND CODES EXPLAINED IN INTERPRETER

5. GENERAL-PURPOSE RECTIFIERS - $I_O \geq 10$ A (Cont'd)

IN ORDER OF: (1) IO MAX (2) PIV (3) ° TEMP & (4) TYPE NMBER

LINE No.	4 TYPE NUMBER	2 PIV (V)	MAX AVG FWD DC CURRENT 1 Io MAX (A)	3 @ TEMP (°C)	MAX RATING SURGE CURR PEAK 1 Cy (A)	PULSE WIDTH (s)	MAX. TEMP (°C)	MAT	DRAWING No.
1	Q20G	800 %	20	100C	400	10m	150J	Si	S522a
2	SKR1M20/08	800	20	108C	320	10m	150J	Si	DO4
3	21R8S	800	20	120C	400		175	Si△	S102
4	BYX25-800	800	20	125B	360 §	10m	175J	Si	DO4⊠
5	SKR26/08	800	20	125C	350	8.3m	180A	Si	DO4
6	1N2286	800	20	150C	400	8.3m	150C	Si	DO5
7	MR2008S	800	20	150C	400		175J	Si△	DO4
8	RN820	800	20	150C	250	10m	175J	Si	DO5
9	BYX96-900	900	20	125B	320 §	10m	150J	Si△	S455⊠
10♦	HRSCHS12500	12k	20	55	150			Si	A138w
11	HSE8060-RT	50	22	25	350	8.3m	175C	Si	DO5
12	22A50	50	22	50C	300		175J	Si	DO4
13	S2105	50	22	131C	250	8.3m	190J	Si△	S488⊠
14	1N1191A	50	22	150C	500	8.3m	200J	Si	DO5
15	1S1288R	100	22		170		150A	Si	
16	HSE8061-RT	100	22	25	350	8.3m	175C	Si	DO5
17	22A100	100	22	50C	300		175J	Si	DO4
18	MR751	100	22	60	400		175J	Si△	A416a
19	S2110	100	22	131C	250	8.3m	190J	Si△	S488⊠
20	1N1192A	100	22	150C	500	8.3m	200J	Si	DO5
21	22CC11	150	22	120C	350	10m	150J	Si	M80c
22	22CD11	150	22	120C	350	10m	150J	Si	M80c
23	S2115	150	22	131C	250	8.3m	190J	Si△	S488⊠
24	1N1193A	150	22	150C	500	8.3m	200J	Si	DO5
25	HSE8062-RT	200	22	25	350	8.3m	175C	Si	DO5
26	1N2784	200	22	40A	200		175C	Si	DO4⊠
27	22A200	200	22	50C	300		175J	Si	DO4
28	MR752	200	22	60	400		175J	Si△	A416a
29	1N3964	200	22	120C	200		150A	Si△	DO4△#
30	S2120	200	22	131C	250	8.3m	190J	Si△	S488⊠
31	1N1194A	200	22	150C	500	8.3m	200J	Si	DO5
32	S2125	250	22	131C	250	8.3m	190J	Si△	S488⊠
33	HSE8063-RT	300	22	25	350	8.3m	175C	Si	DO5
34	22FC11	300	22	120C	350	10m	150J	Si	M80c
35	22FD11	300	22	120C	350	10m	150J	Si	M80c
36	S2130	300	22	131C	250	8.3m	190J	Si△	S488⊠
37	S2135	350	22	131C	250	8.3m	190J	Si△	S488⊠
38	HSE8064-RT	400	22	25	350	8.3m	175C	Si	DO5
39	1N2785	400	22	40A	200		175C	Si	DO4⊠
40	22A400	400	22	50C	300		175J	Si	DO4
41	MR754	400	22	60	400		175J	Si△	A416a
42	1N3965	400	22	120C	200		150A	Si△	DO4△#
43	S2140	400	22	131C	250	8.3m	190J	Si△	S488⊠
44	S2145	450	22	131C	250	8.3m	190J	Si△	S488⊠
45	HSE8065-RT	500	22	25	350	8.3m	175C	Si	DO5
46	S2150	500	22	131C	250	8.3m	190J	Si△	S488⊠
47	HSE8066-RT	600	22	25	350	8.3m	175C	Si	DO5
48	22A600	600	22	50C	300		175J	Si	DO4
49	MR756	600	22	60	400		175J	Si△	A416a
50	1N3966	600	22	120C	200		150A	Si△	DO4△#
51	S2160	600	22	131C	250	8.3m	190J	Si△	S488⊠
52	HSE8057-RT	700	22	25	250	8.3m	175C	Si	DO5
53	HSE8067-RT	700	22	25	350	8.3m	175C	Si	DO5
54	S2170	700	22	131C	250	8.3m	190J	Si△	S488⊠
55	HSE8058-RT	800	22	25	250	8.3m	175C	Si	DO5
56	HSE8068-RT	800	22	25	350	8.3m	175C	Si	DO5
57	22A800	800	22	50C	300		175J	Si	DO4
58	1N3967	800	22	120C	200		150A	Si△	DO4△#
59	S2180	800	22	131C	250	8.3m	190J	Si△	S488⊠
60	HSE8059-RT	900	22	25	250	8.3m	175C	Si	DO5
61	HSE8069-RT	900	22	25	350	8.3m	175C	Si	DO5
62	S2190	900	22	131C	250	8.3m	190J	Si△	S488⊠
63	BYW25-800	800	23	125A	550	10m	150J	Si	D05
64	5Q3	50	24	100$			150	Si	S68
65	AR2400	50	24	125C	400		175	Si	M1228
66	MR2400	50	24	150C	400	8.3m	175J	Si	M1339
67	AR2401	100	24	125C	400		175	Si	M1228
68	MR2401	100	24	150C	400	8.3m	175J	Si	M1339
69	AR2402	200	24	125C	400		175	Si	M1228
70	MR2402	200	24	150C	400	8.3m	175J	Si	M1339
71▼	D24N400B	400	24	100C	510 §	10m	150J	Si	S493e
72▼	D24N400C	400	24	100C	510 §	10m	150J	Si	S493d
73▼	D24N400U	400	24	100C	510 §	10m	150J	Si	S493d
74▼	D24NR400B	400	24	100C	510 §	10m	150J	Si	S493e
75▼	D24NR400C	400	24	100C	510 §	10m	150J	Si	S493d
76▼	D24NR400U	400	24	100C	510 §	10m	150J	Si	S493d
77	AR2404	400	24	125C	400		175	Si	M1228
78	MR2404	400	24	150C	400	8.3m	175J	Si	M1339
79	AR2406	600	24	125C	400		175	Si	M1228
80	MR2406	600	24	150C	400	8.3m	175J	Si	M1339
81▼	D24N800B	800	24	100C	510 §	10m	150J	Si	S493e
82▼	D24N800C	800	24	100C	510 §	10m	150J	Si	S493d
83▼	D24N800U	800	24	100C	510 §	10m	150J	Si	S493d
84▼	D24NR800B	800	24	100C	510 §	10m	150J	Si	S493e
85▼	D24NR800C	800	24	100C	510 §	10m	150J	Si	S493d
86▼	D24NR800U	800	24	100C	510 §	10m	150J	Si	S493d

$I_O \geq 25$ A

LINE No.	4 TYPE NUMBER	2 PIV (V)	MAX AVG FWD DC CURRENT 1 Io MAX (A)	3 @ TEMP (°C)	MAX RATING SURGE CURR PEAK 1 Cy (A)	PULSE WIDTH (s)	MAX. TEMP (°C)	MAT	DRAWING No.
90♦	MBR2520	20	25	80C	800	8.3m	125J	Si△	DO4
91	MR2525	23	25	150C	600		175J	Si	S524
92	MR2525R	23	25	150C	600		175J	Si	S524
93	1N6095	30	25	70A	400 §		125A	Si	E203a
94♦	MBR2530	30	25	80C	800	8.3m	125J	Si△	DO4
95	28CPQ030	30	25	95C	400		125J	Si	TO247
96	DD6202	30	25	150C	400	10m	25J	Si△	DO21⊠
97	DD6802	30	25	150C	400	10m	175C	Si	M338a
98	MBR2535	35	25		80		125J	♦	DO4
99	BYV21-35	35	25	100A	600	10m	125J	♦	DO4
100	1N6096	40	25	70A	400 §		125A	Si	E203a
101♦	MBR2540	40	25	80C	800	8.3m	125J	Si△	DO4
102	28CPQ040	40	25	95C	400		125J	Si	TO247
103	BYV21-40	40	25	100A	600	10m	125J	♦	DO4
104	BYS28	45	25		250	10m	125J	Si	M1221
105	FRR80-3	48 %	25	100C	250		125J	Si	M1007
106	DD6620(A)	50	25					Si	
107	1N3491	50	25	25C	300	8.3m	175C	Si	DO21
108	25PW5	50	25	100C	300		175J	Si	DO21⊠
109	J527-0A	50	25	100C	300	8.3m	175C	Si	M947a*
110	J527-0C	50	25	100C	300	8.3m	175C	Si	M947b*
111	J527-0D	50	25	100C	300	8.3m	175C	Si	M947*
112	SGI5601C	50	25	100C	400	8.3m	175J	Si	TO3 *
113	TJ132-0A	50	25	100C	300	8.3m	175A	Si	C199a
114	TJ132-0C	50	25	100C	300	8.3m	175A	Si	C199
115	TJ132-0D	50	25	100C	300	8.3m	175A	Si	C199b
116	1N2154	50 *	25	145B	400		200J	Si*	DO5⊠
117	DD6120H	50	25	145C	400	10m	175C	Si	M776⊠
118	DD6120S	50	25	145C	400	10m	175C	Si	M775a⊠
119	DD6120V	50	25	145C	400	10m	175C	Si	M777⊠
120	S25A05	50	25	145C	400		175	Si	DO5
121	4AF05NLH	50	25	150C	314	8.3m	175J	Si	M1278b
122	4AF05NLV	50	25	150C	314	8.3m	175J	Si	M1278
123	4AF05NPP	50	25	150C	314	8.3m	175J	Si	M1278a
124	AR25A	50	25	150A	400		175	Si	M778a
125	ARS25A	50	25	150C	400		175	Si	M778b
126	MR2500	50	25	150C	400	8.3m	175J	Si△	M867
127	MR2500M	50	25	150C	400	8.3m	175J	Si△	M867a
128	R4100025	50	25	150C	500	5.0m	200J	△	DO5
129	RA2505	50	25	150A	400		175A	Si	M778a
130	SSiE1305	75	25	135C	350	10m	150J	Si△	S290△⊠
131	DD6205	75	25	150C	400	10m	25J	Si△	DO21⊠
132	DD6805	75	25	150C	400	10m	175C	Si	M338a
133	1SM25	80	25		400			Si	S514
134	1N1454	100	25				190J	Si	M56d
135	SUES702	100	25		500	8.3m	175J	Si	DO4
136	1N3492	100	25	25C	300	8.3m	175C	Si	DO21
137	25PW10	100	25	100C	300		175J	Si	DO21⊠
138	J527-1A	100	25	100C	300	8.3m	175C	Si	M947a*
139	J527-1C	100	25	100C	300	8.3m	175C	Si	M947b*
140	J527-1D	100	25	100C	300	8.3m	175C	Si	M947*
141	SGI5602C	100	25	100C	400	8.3m	175J	Si	TO3 *
142	TJ132-1A	100	25	100C	300	8.3m	175A	Si	C199a
143	TJ132-1C	100	25	100C	300	8.3m	175A	Si	C199
144	TJ132-1D	100	25	100C	300	8.3m	175A	Si	C199b
145	A25A	100	25	120C	300		175J	Si	DO4
146	M25-100	100	25	120C	300 §	10m	175S	Si	S436⊠
147	M25-100R	100	25	120A	300		175J	Si	S436
148	SR25B2S	100	25	120C	600 §	8.3m	150J	Si△	S249b⊠
149	1N1192	100 *	25	145C	125		190J	Si	S29
150	1N2155	100 *	25	145B	400		200J	Si*	DO5⊠
151	DD6121H	100	25	145C	400	10m	175C	Si	M776⊠
152	DD6121S	100	25	145C	400	10m	175C	Si	M775a⊠
153	DD6121V	100	25	145C	400	10m	175C	Si	M777⊠
154	S25A1	100	25	145C	400	8.3m	175A	Si	DO5
155	4AF1NLH	100	25	150C	314	8.3m	175J	Si	M1278b
156	4AF1NLV	100	25	150C	314	8.3m	175J	Si	M1278
157	4AF1NPP	100	25	150C	314	8.3m	175J	Si	M1278a
158	AR25B	100	25	150A	400		175	Si	M778a
159	ARS25B	100	25	150C	400		175	Si	M778b
160	MR2501	100	25	150C	400	8.3m	175J	Si△	M867
161	MR2501M	100	25	150C	400	8.3m	175J	Si△	M867a
162	R4100125	100	25	150C	500	5.0m	200J	△	DO5
163	RA251	100	25	150A	400		175A	Si	M778a
164	SUES703	150	25		500	8.3m	175J	Si	DO4
165	25CC13	150	25	50A	300	10m	150J	Si	S19n
166	25CD13	150	25	50A	300	10m	150J	Si	S19n
167	SGI5603C	150	25	100C	400	8.3m	175J	Si	TO3 *
168	SSiE1310	150	25	135C	350	10m	150J	Si△	S290△⊠
169	1N1193	150 *	25	145C	125		190J	Si	S29
170	DD6210	150	25	150C	400	10m	25J	Si△	DO21⊠
171	DD6810	150	25	150C	400	10m	175C	Si	M338a
172	2SM25	160	25		400			Si	S514
173	1N1455	200	25				190J	Si	M56d
174	SUES704	200	25		500	8.3m	175J	Si	DO4
175	UES704	200	25		500	8.3m	175J	Si	DO4
176	1N3493	200	25	25C	300	8.3m	175C	Si	DO21
177	DD6623(A)	200	25	25			200J	Si	
178	DS17-02A	200	25	45A	300 §	10m	190J	Si	S4v⊠
179	25PW20	200	25	100C	300		175J	Si	DO21⊠
180	J527-2A	200	25	100C	300	8.3m	175C	Si	M947a*
181	J527-2C	200	25	100C	300	8.3m	175C	Si	M947b*
182	J527-2D	200	25	100C	300	8.3m	175C	Si	M947*
183	SGI5604C	200	25	100C	400	8.3m	175J	Si	TO3 *
184	SKN20/02	200	25	100C	320	10m	180J	Si	S171s⊠
185	SKR20/02	200	25	100C	350	8.3m	180A	Si	DO4
186	TJ132-2A	200	25	100C	300	8.3m	175A	Si	C199a
187	TJ132-2C	200	25	100C	300	8.3m	175A	Si	C199
188	TJ132-2D	200	25	100C	300	8.3m	175A	Si	C199b
189	VTA200	200	25	100C	250	8.3m	180J	Si△	M560a*
190	VTA200S	200	25	100C	250	8.3m	180J	Si△	S458a*
191	VTA200T	200	25	100C	250	8.3m	180J	Si△	M864a*
192	VTB200	200	25	100C	250	8.3m	180J	Si△	M560b*
193	VTB200S	200	25	100C	250	8.3m	180J	Si△	S458b*
194	VTB200T	200	25	100C	250	8.3m	180J	Si△	M864b*
195	VTC200	200	25	100C	250	8.3m	180J	Si△	M560c*
196	VTC200S	200	25	100C	250	8.3m	180J	Si△	S458c*
197	VTC200T	200	25	100C	250	8.3m	180J	Si△	M864c*
198	VTD200	200	25	100C	250	8.3m	180J	Si△	M560d*
199	VTD200S	200	25	100C	250	8.3m	180J	Si△	S458d*
200	VTD200T	200	25	100C	250	8.3m	180J	Si△	M864d*
201	A25B	200	25	120C	300		175J	Si	DO4
202	M25-200	200	25	120C	300 §	10m	175S	Si	S436⊠
203	M25-200R	200	25	120A	300		175J	Si	S436
204	SG5L	200	25	120C	250	10m	150S	Si	M650
205	SG6LR	200	25	120C	250	10m	150S	Si	M1152
206	SG6LS	200	25	120C	250	10m	150S	Si	M1152
207	SR25B4S	200	25	120C	600 §	8.3m	150J	Si△	S249b⊠
208	SKN26/02	200	25	125C	320	10m	180J	Si	DO4
209	1N1194	200 *	25	145C	125		190J	Si	S29
210	1N2156	200 *	25	145B	400		200J	Si*	DO5⊠
211	DD6123H	200	25	145C	400	10m	175C	Si	M776⊠
212	DD6123S	200	25	145C	400	10m	175C	Si	M775a⊠
213	DD6123V	200	25	145C	400	10m	175C	Si	M777⊠
214	S25A2	200	25	145C	400	8.3m	175A	Si	DO5
215	4AF2NLH	200	25	150C	314	8.3m	175J	Si	M1278b
216	4AF2NLV	200	25	150C	314	8.3m	175J	Si	M1278
217	4AF2NPP	200	25	150C	314	8.3m	175J	Si	M1278a
218	AR25D	200	25	150A	400		175	Si	M778a
219	ARS25D	200	25	150C	400		175	Si	M778b
220	MR2502	200	25	150C	400	8.3m	175J	Si△	M867

SYMBOLS AND CODES EXPLAINED IN INTERPRETER

5. GENERAL-PURPOSE RECTIFIERS - $I_0 \geq 25$ A (Cont'd)

IN ORDER OF: (1) IO MAX (2) PIV (3) ° TEMP & (4) TYPE NMBER

LINE No.	4 TYPE NUMBER	2 PIV (V)	MAX AVG FWD DC CURRENT 1 Io MAX (A)	3 @ TEMP (°C)	MAX RATING SURGE CURR PEAK 1 Cy (A)	PULSE WIDTH (s)	MAX. TEMP (°C)	MAT	DRAWING No.
1	MR2502M	200	25	150C	400	8.3m	175J	Si△	M867a
2	R4100225	200	25	150C	500	5.0m	200J	△	DO5
3	RA252	200	25	150A	400		175A	Si	M778a
4	1N1456	300	25				190J	Si	M56d
5	SUES705	300	25		500	8.3m	175J	Si	DO4
6	UES705	300	25		500	8.3m	175J	Si	DO4
7	1N3494	300	25	25C	300	8.3m	175C	Si	DO21
8	25FC13	300	25	50A	300	10m	150J	Si	S19n
9	25FD13	300	25	50A	300	10m	150J	Si	S19n
10	25PW30	300	25	100C	300		175J	Si	DO21⊠
11	J527-3A	300	25	100C	300	8.3m	175C	Si	M947a*
12	J527-3C	300	25	100C	300	8.3m	175C	Si	M947b*
13	J527-3D	300	25	100C	300	8.3m	175C	Si	M947*
14	TJ132-3A	300	25	100C	300	8.3m	175A	Si	C199a
15	TJ132-3C	300	25	100C	300	8.3m	175A	Si	C199
16	TJ132-3D	300	25	100C	300	8.3m	175A	Si	C199b
17	SR25B6S	300	25	120C	600 §	8.3m	150J	Si△	S249b⊠
18	SSiE1320	300	25	135C	350	10m	150J	Si△	S290△⊠
19	1N1195	300 *	25	145C	125		190J	Si	S29
20	1N2157	300 *	25	145B	400		200J	Si*	DO5⊠
21	S25A3	300	25	145C	400	8.3m	175A	Si	DO5
22	AR25F	300	25	150A	400		175	Si	M778a
23	DD6220	300	25	150C	400	10m	25J	Si△	DO21⊠
24	DD6820	300	25	150C	400	10m	175C	Si	M338a
25	R4100325	300	25	150C	500	5.0m	200J	△	DO5
26	RA253	300	25	150A	400		175A	Si	M778a
27	4SM25	320	25		400			Si	S514
28	1N1457	400	25				190J	Si	M56d
29	SUES706	400	25		500	8.3m	175J	Si	DO4
30	UES706	400	25		500	8.3m	175J	Si	DO4
31	1N3495	400	25	25C	300	8.3m	175C	Si	DO21
32	DD6626(A)	400	25	25			200J	Si	
33	DS17-04A	400	25	45A	300 §	10m	190J	Si	S4v⊠
34	25GC12	400	25	50A	600		150J	Si	S19n
35	SCDAR4	400	25	75C	375		150J	Si	M977
36	25PW40	400	25	100C	300		175J	Si	DO21⊠
37	J527-4A	400	25	100C	300	8.3m	175C	Si	M947a*
38	J527-4C	400	25	100C	300	8.3m	175C	Si	M947b*
39	J527-4D	400	25	100C	300	8.3m	175C	Si	M947*
40	SKN20/04	400	25	100C	320	10m	180J	Si	S171s⊠
41	SKR20/04	400	25	100C	350	8.3m	180A	Si	DO4
42	TJ132-4A	400	25	100C	300	8.3m	175A	Si	C199a
43	TJ132-4C	400	25	100C	300	8.3m	175A	Si	C199
44	TJ132-4D	400	25	100C	300	8.3m	175A	Si	C199b
45	VTA400	400	25	100C	250	8.3m	180J	Si△	M560a*
46	VTA400S	400	25	100C	250	8.3m	180J	Si△	S458a*
47	VTA400T	400	25	100C	250	8.3m	180J	Si△	M864a*
48	VTB400	400	25	100C	250	8.3m	180J	Si△	M560b*
49	VTB400S	400	25	100C	250	8.3m	180J	Si△	S458b*
50	VTB400T	400	25	100C	250	8.3m	180J	Si△	M864b*
51	VTC400	400	25	100C	250	8.3m	180J	Si△	M560c*
52	VTC400S	400	25	100C	250	8.3m	180J	Si△	S458c*
53	VTC400T	400	25	100C	250	8.3m	180J	Si△	M864c*
54	VTD400	400	25	100C	250	8.3m	180J	Si△	M560d*
55	VTD400S	400	25	100C	250	8.3m	180J	Si△	S458d*
56	VTD400T	400	25	100C	250	8.3m	180J	Si△	M864d*
57	A25D	400	25	120C	300		175J	Si	DO4
58	M25-400	400	25	120C	300 §	10m	175S	Si	S436⊠
59	M25-400R	400	25	120A	300		175J	Si	S436
60	SR25B8S	400	25	120C	600 §	8.3m	150J	Si△	S249b⊠
61	SKN26/04	400	25	125C	320	10m	180J	Si	DO4
62	1N1196	400 *	25	145C	125		190J	Si	S29
63	1N2158	400 *	25	145B	400		200J	Si*	DO5⊠
64	DD6126H	400	25	145C	400	10m	175C	Si	M776⊠
65	DD6126S	400	25	145C	400	10m	175C	Si	M775a⊠
66	DD6126V	400	25	145C	400	10m	175C	Si	M777⊠
67	S25A4	400	25	145C	400	8.3m	175A	Si	DO5
68	4AF4NLH	400	25	150C	314	8.3m	175J	Si	M1278b
69	4AF4NLV	400	25	150C	314	8.3m	175J	Si	M1278
70	4AF4NPP	400	25	150C	314	8.3m	175J	Si	M1278a
71	AR25G	400	25	150A	400		175	Si	M778a
72	ARS25G	400	25	150C	400		175	Si	M778b
73	MR2504	400	25	150C	400	8.3m	175J	Si△	M867
74	MR2504M	400	25	150C	400	8.3m	175J	Si△	M867a
75	R4100425	400	25	150C	500	5.0m	200J	△	DO5
76	RA254	400	25	150A	400		175A	Si	M778a
77	SSiE1330	450	25	135C	350	10m	150J	Si△	S290△⊠
78	DD6230	450	25	150C	400	10m	25J	Si△	DO21⊠
79	DD6830	450	25	150C	400	10m	175C	Si	M338a
80	6SM25	480	25		400			Si	S514
81	SUES701	500	25		500	8.3m	175J	Si	DO4
82	A139E	500	25	75	400	8.3m	125	Si	DO5
83	25PW50	500	25	100C	300		175J	Si△	DO21⊠
84	J527-5A	500	25	100C	300	8.3m	175C	Si	M947a*
85	J527-5C	500	25	100C	300	8.3m	175C	Si	M947b*
86	J527-5D	500	25	100C	300	8.3m	175C	Si	M947*
87	MR327	500	25	100C	300	8.3m	175J	Si	DO21
88	TJ132-5A	500	25	100C	300	8.3m	175A	Si	C199a
89	TJ132-5C	500	25	100C	300	8.3m	175A	Si	C199
90	TJ132-5D	500	25	100C	300	8.3m	175A	Si	C199b
91	SR25B10S	500	25	120C	600 §	8.3m	150J	Si△	S249b⊠
92	1N1197	500 *	25	145C	125		190J	Si	S29
93	1N2159	500 *	25	145B	400		200J	Si*	DO5⊠
94	S25A5	500	25	145C	400	8.3m	175A	Si	DO5
95	AR25H	500	25	150A	400		175	Si	M778a
96	R41000525	500	25	150C	500	5.0m	200J	△	DO5
97	RA255	500	25	150A	400		175A	Si	M778a
98	S25VB60	600	25	40	400	1.0	150	Si	
99	25JC12	600	25	50A	600		150J	Si	S19n
100	A139M	600	25	75	400	8.3m	125	Si	DO5
101	25PW60	600	25	100C	300		175J	Si△	DO21⊠
102	J527-6A	600	25	100C	300	8.3m	175C	Si	M947a*
103	J527-6C	600	25	100C	300	8.3m	175C	Si	M947b*
104	J527-6D	600	25	100C	300	8.3m	175C	Si	M947*
105	MR328	600	25	100C	300	8.3m	175J	Si	DO21
106	TJ132-6A	600	25	100C	300	8.3m	175A	Si	C199a
107	TJ132-6C	600	25	100C	300	8.3m	175A	Si	C199
108	TJ132-6D	600	25	100C	300	8.3m	175A	Si	C199b
109	VTA600	600	25	100C	250	8.3m	180J	Si	M560a*
110	VTA600S	600	25	100C	250	8.3m	180J	Si△	S458a*
111	VTA600T	600	25	100C	250	8.3m	180J	Si△	M864a*
112	VTB600	600	25	100C	250	8.3m	180J	Si	M560b*
113	VTB600S	600	25	100C	250	8.3m	180J	Si△	S458b*
114	VTB600T	600	25	100C	250	8.3m	180J	Si△	M864b*
115	VTC600	600	25	100C	250	8.3m	180J	Si	M560c*
116	VTC600S	600	25	100C	250	8.3m	180J	Si△	S458c*
117	VTC600T	600	25	100C	250	8.3m	180J	Si△	M864c*
118	VTD600	600	25	100C	250	8.3m	180J	Si	M560d*
119	VTD600S	600	25	100C	250	8.3m	180J	Si△	S458d*
120	VTD600T	600	25	100C	250	8.3m	180J	Si△	M864d*
121	A25M	600	25	120C	300		175J	Si	DO4
122	M25-600	600	25	120C	300 §	10m	175S	Si	S436⊠
123	M25-600R	600	25	120A	300		175J	Si	S436
124	DS17-06A	600	25	130C	300	10m	180J	Si	
125	SSiE1340	600	25	135C	350	10m	150J	Si△	S290△⊠
126	1N1198	600 *	25	145C	125		190J	Si	S29
127	1N2160	600 *	25	145B	400		200J	Si*	DO5⊠
128	S25A6	600	25	145C	400	8.3m	175A	Si	DO5
129	4AF6NLH	600	25	150C	314	8.3m	175J	Si	M1278b
130	4AF6NLV	600	25	150C	314	8.3m	175J	Si	M1278
131	4AF6NPP	600	25	150C	314	8.3m	175J	Si	M1278a
132	AR25J	600	25	150A	400		175	Si	M778a
133	ARS25J	600	25	150C	400		175	Si	M778b
134	DD6240	600	25	150C	400	10m	25J	Si△	DO21⊠
135	DD6840	600	25	150C	400	10m	175C	Si	M338a
136	MR2506	600	25	150C	400	8.3m	175J	Si△	M867
137	MR2506M	600	25	150C	400	8.3m	175J	Si△	M867a
138	R41000625	600	25	150C	500	5.0m	200J	△	DO5
139	RA256	600	25	150A	400		175A	Si	M778a
140	8SM25	640	25		400			Si	S514
141	J527-7A	700	25	100C	300	8.3m	175C	Si	M947a*
142	J527-7C	700	25	100C	300	8.3m	175C	Si	M947b*
143	J527-7D	700	25	100C	300	8.3m	175C	Si	M947*
144	TJ132-7A	700	25	100C	300	8.3m	175A	Si	C199a
145	TJ132-7C	700	25	100C	300	8.3m	175A	Si	C199
146	TJ132-7D	700	25	100C	300	8.3m	175A	Si	C199b
147	R41000725	700	25	150C	500	5.0m	200J	△	DO5
148	10SM25	800	25		400			Si	S514
149▼	SR2508	800	25					Si	D05
150	25LC12	800	25	50A	600		150J	Si	S19n
151	A139N	800	25	75	400	8.3m	125	Si	DO5
152	J527-8A	800	25	100C	300	8.3m	175C	Si	M947a*
153	J527-8C	800	25	100C	300	8.3m	175C	Si	M947b*
154	J527-8D	800	25	100C	300	8.3m	175C	Si	M947*
155	MR330	800	25	100C	300	8.3m	175J	Si	DO21
156	SKN20/08	800	25	100C	320	10m	180J	Si	S171s⊠
157	SKR20/08	800	25	100C	350	8.3m	180A	Si	DO4
158	TJ132-8A	800	25	100C	300	8.3m	175A	Si	C199a
159	TJ132-8C	800	25	100C	300	8.3m	175A	Si	C199
160	TJ132-8D	800	25	100C	300	8.3m	175A	Si	C199b
161	SA08PCN022	800	25	111C	200 §	10m	180J	Si△	D04⊠
162	A25N	800	25	120C	300		175J	Si	DO4
163	M25-800	800	25	120C	300 §	10m	175S	Si	S436⊠
164	M25-800R	800	25	120A	300		175J	Si	S436
165	SKN26/08	800	25	125C	320	10m	180J	Si	DO4
166	DS17-08A	800	25	130C	300	10m	180J	Si	
167	25LF11	800	25	140C	500	10m	175J	Si	S4k
168	S25A8	800	25	145C	400	8.3m	175A	Si	DO5
169	AR25K	800	25	150A	400		175	Si	M778a
170	ARS25K	800	25	150C	400		175	Si	M778b
171	MR2508	800	25	150C	400	8.3m	175J	Si△	M867
172	MR2508M	800	25	150C	400	8.3m	175J	Si△	M867a
173	R41000825	800	25	150C	500	5.0m	200J	△	DO5
174	RA258	800	25	150A	400		175A	Si	M778a
175	SV800	800	25	150C	300	8.3m	175	Si	DO21
176	J527-9A	900	25	100C	300	8.3m	175C	Si	M947a*
177	J527-9C	900	25	100C	300	8.3m	175C	Si	M947b*
178	J527-9D	900	25	100C	300	8.3m	175C	Si	M947*
179	TJ132-9A	900	25	100C	300	8.3m	175A	Si	C199a
180	TJ132-9C	900	25	100C	300	8.3m	175A	Si	C199
181	TJ132-9D	900	25	100C	300	8.3m	175A	Si	C199b
182	R41000925	900	25	150C	500	5.0m	200J	△	DO5
183	PR334-RT	600	25.5		850			Si	DO5
184	PR335-RT	600	25.5		850			Si	DO5
185	SSH30A020D	20	30		300			Si	TO3
186	SSH30A020S	20	30		500			Si	DO4
187	SSH30A020T	20	30		500			Si	TO3
188	SSPD3020	20	30		400	8.3m	175	Si	TO3 *
189	USD320C	20	30	100C	500	8.3m	175J	Si	TO3
190	MBR3020CT	20	30	105C	400	8.3m	150J	♦	TO3
191	SSH30A030D	30	30		300			Si	TO3
192	SSH30A030S	30	30		500			Si	DO4
193	SSH30A030T	30	30		500			Si	TO3
194	SSPD3030	30	30		400	8.3m	175	Si	TO3 *
195	30CTQ30	30	30	100C	285	6.0m	150J	♦	Y220b
196	30FQ030A	30	30	123C	590	6.0m	175J	♦	DO4
197	21FQ035	35	30	96C	575	6.0m	150J	♦	DO4
198	30CTQ35	35	30	100C	285	6.0m	150J	♦	Y220b
199	USD335C	35	30	100C	500	8.3m	175J	Si	TO3
200	MBR3035CT	35	30	105C	400	8.3m	150J	♦	TO3
201	30FQ035	35	30	119C	575	6.0m	175J	♦	DO4
202	30FQ035A	35	30	123C	590	6.0m	175J	♦	DO4
203♦	MBR2535CT	35	30	130C	150	8.3m	150J	♦	Y220AB
204	G30R4	40	30		600		110	Ge	DO4
205	SSH30A040D	40	30		300			Si	TO3
206	SSH30A040S	40	30		500			Si	DO4
207	SSH30A040T	40	30		500			Si	TO3
208	SSPD3040	40	30		400	8.3m	175	Si	TO3 *
209	21FQ040	40	30	96C	575	6.0m	150J	♦	DO4
210	30CTQ40	40	30	100C	285	6.0m	150J	♦	Y220b
211	30FQ040	40	30	119C	575	6.0m	175J	♦	DO4
212	30FQ040A	40	30	123C	590	6.0m	175J	♦	DO4
213	BYS98-40	40	30	127C	900		175J	Si	M1293*
214	30CTQ45	45	30	100C	285	6.0m	150J	♦	Y220b
215	USD345C	45	30	100C	500	8.3m	175J	Si	TO3
216	SD241#B	45	30	105C	400	8.3m	150J	♦	TO3
217	BYS30	45	30	114C	630	8.3m	150J	Si	S19ae
218	BYS41	45	30	114C	600	8.3m	150J	Si	S19af
219	BYS42	45	30	114C	400	8.3m	150J	Si	M1149
220	30FQ045A	45	30	123C	590	6.0m	175J	♦	DO4

SYMBOLS AND CODES EXPLAINED IN INTERPRETER

5. GENERAL-PURPOSE RECTIFIERS - $I_0 \geq 25$ A (Cont'd)

IN ORDER OF: (1) IO MAX (2) PIV (3) • TEMP & (4) TYPE NMBER

LINE No.	4 TYPE NUMBER	2 PIV (V)	MAX AVG FWD DC CURRENT 1 Io MAX (A)	3 @ TEMP (°C)	MAX RATING SURGE CURR PEAK 1 Cy (A)	PULSE WIDTH (s)	MAX. TEMP (°C)	MAT	DRAWING No.
1	BYS98-45	45	30	127C	900		175J	Si	M1293*
2	MBR2545CT	45	30	130C	150	8.3m	150J	♦	Y220AB
3	GD30R4	48	30	25C	600		110J	Ge	TO3
4	BYS32	50	30		600	10m	175J	Si	S19af
5	DD6720(A)	50	30					Si	
6	PMR35K050	50	30		400	8.3m	200J	Si	C202a⊠
7	PMR36K050	50	30		400		200	Si	TO3
8	SSH30A050D	50	30		300			Si	TO3
9	SSH30A050S	50	30		500			Si	DO4
10	SSH30A050T	50	30		500			Si	TO3
11	SUES601	50	30		1.0k	8.3m	175J	Si	TO3
12	SUES2601	50	30		500	8.3m	175J	Si	TO3
13	T3909	50	30		300	8.3m	150J	Si	DO5
14	1N1434	50	30	25B	160	1	175A	Si	S143
15	FE30A	50	30	25A	300	8.3m	150J	Si$	TO3
16	GM30A	50	30	25A	300	8.3m	150J	Si	TO3
17	RGM30A	50	30	25A	200	8.3m	125J	Si	TO3
18	30AD50	50	30	50C	350		175J	Si	DO5
19	PBC05	50	30	55C	300		150C	Si	M447⊠*
20	1N3659	50	30	100C	400	8.3m	175C	Si	DO21
21	BYV42-50	50	30	104A	400		150J	Si	Y220AB*
22	BYV72-50	50	30	105A	300		150J	Si	M958 *
23	VHE701	50	30	115	500	16m	175J	Si	E203a
24	F3A3	50	30	124C	300		190C	Si	DO5
25	BYS98-50	50	30	127C	900		175J	Si	M1293*
26	G3A3	50	30	150C	1.5k		175J	Si	DO8
27	BYS31	60	30		600	10m	175J	Si	S19af
28	SSH30A060D	60	30		300			Si	TO3
29	SSH30A060S	60	30		500			Si	DO4
30	SSH30A060T	60	30		500			Si	TO3
31	P54A	65 %	30	115C	600	10m	150J	Si	S520a
32	P53A	75 %	30	87	450	10m	150J	Si	S521a
33	P53T	95 %	30	115C	660	8.3m	150J	Si	S520
34	P54T	95 %	30	115C	600	10m	150J	Si	S520a
35▼	BYX96-100	100	30					Si	D04
36	NSR8140S	100	30		300		150A	Si	TO3⊠
37	PMR35K100	100	30		400	8.3m	200J	Si	C202a⊠
38	PMR36K100	100	30		400		200	Si	TO3
39	SUES602	100	30		1.0k	8.3m	175J	Si	TO3
40	SUES2602	100	30		500	8.3m	175J	Si	TO3
41	T3910	100	30		300	8.3m	150J	Si	DO5
42	1N1435	100	30	25B	160	1	175A	Si	S143
43	FE30B	100	30	25A	300	8.3m	150J	Si$	TO3
44	GM30B	100	30	25A	300	8.3m	150J	Si	TO3
45	PFR130N	100	30	25	300	10m	175J	Si	TO3⊠*
46	RGM30B	100	30	25A	200	8.3m	125J	Si	TO3
47	30AD100	100	30	50C	350		175J	Si	DO5
48	PBC10	100	30	55C	300		150C	Si	M447⊠
49	1SR20-100	100	30	85C	700	10m	120J	Si	S456⊠
50	PF310S	100	30	85	700	10m		Si	S456⊠
51	1N3660	100	30	100C	400	8.3m	175C	Si	DO21
52	BYV42-100	100	30	104A	400		150J	Si	Y220AB*
53	BYV72-100	100	30	105A	300		150J	Si	M958 *
54	VHE702	100	30	115	500	16m	175J	Si	E203a
55	F3B3	100	30	124C	300		190C	Si	DO5
56	G3B3	100	30	150C	1.5k		175J	Si	DO8
57	P53B	125 %	30	115C	660	8.3m	150J	Si	S520
58	P54B	125 %	30	115C	600	10m	150J	Si	S520a
59	SUES603	150	30		1.0k	8.3m	175J	Si	TO3
60	SUES2603	150	30		500	8.3m	175J	Si	TO3
61	FE30C	150	30	25A	300	8.3m	150J	Si$	TO3
62	SET030611	150	30	55C	150		175J	Si	M1266 *
63	SET030811	150	30	55C	150		175J	Si	M1266 *
64	SET040211	150	30	55C	250		175J	Si	M1271 *
65	BYV42-150	150	30	104A	400		150J	Si	Y220AB*
66	BYV72-150	150	30	105A	300		150J	Si	M958 *
67	VHE703	150	30	115	500	16m	175J	Si	E203a
68▼	BYX96-200	200	30					Si	D04
69	NSR8141S	200	30		300		150A	Si	TO3⊠
70	PMR35K200	200	30		400	8.3m	200J	Si	C202a⊠
71	PMR36K200	200	30		400		200	Si	TO3
72	SUES604	200	30		1.0k	8.3m	175J	Si	TO3
73	SUES2604	200	30		500	8.3m	175J	Si	TO3
74	T3911	200	30		300	8.3m	150J	Si	DO5
75	1N1436	200	30	25B	160	1	175A	Si	S143
76	DD6723(A)	200	30	25			200J	Si	
77	FE30D	200	30	25A	300	8.3m	150J	Si$	TO3
78	GM30D	200	30	25A	300	8.3m	150J	Si	TO3
79	PFR230N	200	30	25	300	10m	175J	Si	TO3⊠*
80	RGM30D	200	30	25A	200	8.3m	125J	Si	TO3
81	SG-5T	200	30	25C	250	10m	150J	Si	M854⊠
82	30AD200	200	30	50C	350		175J	Si	DO5
83	PBC20	200	30	55C	300		150C	Si	M447⊠
84	1N3661	200	30	100C	400	8.3m	175C	Si	DO21
85	BYV42-200	200	30	104A	400		150J	Si	Y220AB*
86	BYV72-200	200	30	105A	300		150J	Si	M958 *
87	SW02PCN020	200	30	115C	245		175J	Si	DO4⊠
88	VHE704	200	30	115	500	16m	175J	Si	E203a
89	SG5T	200	30	120C	250	10m	150S	Si	M854
90	F3C3	200	30	124C	300		190C	Si	DO5
91	SW02PCN030	200	30	125C	350 §	10m	175J	Si	DO4⊠
92	G3C3	200	30	150C	1.5k		175J	Si	DO8
93	1SR20-250	250	30	85C	700	10m	120J	Si	S456⊠
94	PF325S	250	30	85	700	10m		Si	S456⊠
95	F3D3	250	30	124C	300		190C	Si	DO5
96	G3D3	250	30	150C	1.5k		175J	Si	DO8
97	SUES605	300	30		1.0k	8.3m	175J	Si	TO3
98	SUES2605	300	30		500	8.3m	175J	Si	TO3
99	T3912	300	30		300	8.3m	150J	Si	DO5
100	FE30F	300	30	25A	300	8.3m	150J	Si$	TO3
101	P19C	300 %	30	95C	840	8.3	150J	Si	S520
102	P20C	300 %	30	95C	760	10m	150J	Si	S520a
103	1N3662	300	30	100C	400	8.3m	175C	Si	DO21
104	F3E3	300	30	124C	300		190C	Si	DO5
105	BYX96-300	300	30	125B	400 §	10m	175J	Si	S455⊠
106	G3E3	300	30	150C	1.5k		175J	Si	DO8
107	F3F3	350	30	124C	300		190C	Si	DO5
108	G3F3	350	30	150C	1.5k		175J	Si	DO8
109▼	BYX96-400	400	30					Si	D04
110	NSR8142S	400	30		300		150A	Si	TO3⊠
111	SUES606	400	30		1.0k	8.3m	175J	Si	TO3
112	SUES2606	400	30		500	8.3m	175J	Si	TO3
113	T3913	400	30		300	8.3m	150J	Si	TO3
114	1N1437	400	30	25B	160	1	175A	Si	S143
115	FE30G	400	30	25A	300	8.3m	150J	Si$	TO3
116	GM30G	400	30	25A	300	8.3m	150J	Si	TO3
117	RGM30G	400	30	25A	200	8.3m	125J	Si	TO3
118	VBO13-04N01	400	30	30C	220	10m	150J	Si	
119	30AD400	400	30	50C	350		175J	Si	DO5
120	PBC40	400	30	55C	300		150C	Si	M447⊠
121	SET040204	400	30	55C	250		175J	Si	M1271 *
122	DSM30A4	400	30	65C	900		125J	Si	M1317
123	1SR20-400	400	30	85C	700	10m	120J	Si	S456⊠
124	PF340S	400	30	85	700	10m		Si	S456⊠
125	RM30DZ-M	400	30	92C	600 §	8.3m	125J	Si	M1188
126	1N3663	400	30	100C	400	8.3m	175C	Si	DO21
127	SW04PCN020	400	30	115C	245		175J	Si	DO4⊠
128	F3G3	400	30	124C	300		190C	Si	DO5
129	SW04PCN030	400	30	125C	350 §	10m	175J	Si	DO4⊠
130	G3G3	400	30	150C	1.5k		175J	Si	DO8
131	SET030604	450	30	55C	150		175J	Si	M1266 *
132	SET030804	450	30	55C	150		175J	Si	M1266 *
133	P19E	500 %	30	95C	840	8.3	150J	Si	S520
134	P20E	500 %	30	95C	760	10m	150J	Si	S520a
135	1N3664	500	30	100C	400	8.3m	175C	Si	DO21
136	F3H3	500	30	124C	300		190C	Si	DO5
137	G3H3	500	30	150C	1.5k		175J	Si	DO8
138	30A6F	600	30		300			Si	DO5
139	NSR8143S	600	30		300		150A	Si	TO3⊠
140	T30A6F	600	30		300	8.3m	150J	Si	DO5
141	1N1438	600	30	25B	160	1	175A	Si	S143
142	GM30J	600	30	25A	300	8.3m	150J	Si	TO3
143	RGM30J	600	30	25A	200	8.3m	125J	Si	TO3
144	30AD600	600	30	50C	350		175J	Si	DO5
145	PBC60	600	30	55C	300		150C	Si	M447⊠
146	DSM30A6	600	30	65C	990		125J	Si	M1317
147	1N3665	600	30	100C	400	8.3m	175C	Si	DO21
148	SW06PCN020	600	30	115C	245		175J	Si	DO4⊠
149	F3K3	600	30	124C	300		190C	Si	DO5
150	BYX96-600	600	30	125B	400 §	10m	175J	Si	S455⊠
151	SW06PCN030	600	30	125C	350 §	10m	175J	Si	DO4⊠
152	G3K3	600	30	150C	1.5k		175J	Si	DO8
153	F3M3	700	30	124C	300		190C	Si	DO5
154	G3M3	700	30	150C	1.5k		175J	Si	DO8
155	30A8F	800	30		300			Si	DO5
156▼	BYX96-800	800	30					Si	D04
157	GM30K	800	30	25A	300	8.3m	150J	Si	TO3
158	RGM30K	800	30	25A	200	8.3m	125J	Si	TO3
159	VBO13-08N01	800	30	30C	220	10m	150J	Si	
160	30AD800	800	30	50C	350		175J	Si	DO5
161	PBC80	800	30	55C	300		150C	Si	M447⊠
162	RM30DZ-H	800	30	92C	600 §	8.3m	125J	Si	M1188
163	P19G	800 %	30	95C	840	8.3	150J	Si	S520
164	P20G	800 %	30	95C	760	10m	150J	Si	S520a
165	SW08PCN020	800	30	115C	245		175J	Si	DO4⊠
166	F3N3	800	30	124C	300		190C	Si	DO5
167	SW08PCN030	800	30	125C	350 §	10m	175J	Si	DO4⊠
168	G3N3	800	30	150C	1.5k		175J	Si	DO8
169	B70H40	400	32	50C	1.5k			Si	M1276
170	MDD25-04N1	400	32	80C	450	10m		Si	
171	B70H60	600	32	50C	1.5k			Si	M1276
172	MDD25-06N1	600	32	80C	450	10m		Si	
173	B70H80	800	32	50C	1.5k			Si	M1276
174	DD22S800	800	32	64C	390	10m	150J	Si	20
175	MDD25-08N1	800	32	80C	450	10m		Si	
176▼	D34N400B	400	34	100C	550 §	10m	150J	Si	S493e
177▼	D34N400C	400	34	100C	550 §	10m	150J	Si	S493d
178▼	D34N400U	400	34	100C	550 §	10m	150J	Si	S493d
179▼	D34NR400B	400	34	100C	550 §	10m	150J	Si	S493e
180▼	D34NR400C	400	34	100C	550 §	10m	150J	Si	S493d
181▼	D34NR400U	400	34	100C	550 §	10m	150J	Si	S493d
182♦	D34N800B	800	34	100C	550 §	10m	150J	Si	S493e
183▼	D34N800C	800	34	100C	550 §	10m	150J	Si	S493d
184▼	D34N800U	800	34	100C	550 §	10m	150J	Si	S493d
185▼	D34NR800B	800	34	100C	550 §	10m	150J	Si	S493e
186▼	D34NR800C	800	34	100C	550 §	10m	150J	Si	S493d
187▼	D34NR800U	800	34	100C	550 §	10m	150J	Si	S493d
188	MBR3520	20	35	110C	600	8.3m	150J	Si$	DO4
189▼	TRA1102	30	35					Si	D021
190	SSiE1102	30	35	120C	330	10m	175J	Si△	M324a⊠
191	SSiE1202	30	35	120C	330	10m	175J	Si	M1218
192	MBR3535	35	35	110C	600	8.3m	150J	Si$	DO4
193	MBR3545	45	35	110C	600	8.3m	150J	Si$	DO4
194	MBR3545H1	45	35	110C	600	8.3m	150J	Si$	DO4
195	MBR3545H	45	35	110C	600	8.3m	150J	Si$	DO4
196	35AD50	50	35	50C	375		175J	Si	DO5
197	FB3500	50	35	55C	400	10m	150	Si	
198	NCR35-50	50	35	55C	500			Si	M1024
199	1N1183	50	35	140C	500	8.3m	190C	Si	DO5
200	DD710	50	35	140B	500	10m	175J	Si△	S533
201	SSiE1405	75	35		375	10m	175J	Si	S559
202▼	TRA1105	75	35					Si	D021
203	SSiE1105	75	35	120C	330	10m	150J	Si△	M324a⊠
204	SSiE1205	75	35	120C	330	10m	175J	Si	M1218
205	1N1458	100	35				190J	Si	M56d
206	35AD100	100	35	50C	375		175J	Si	DO5
207	FB3501	100	35	55C	400	10m	150	Si	
208	NCR35-100	100	35	55C	500			Si	M1024
209	ST4-10	100	35	135C	500		175J	Si	S187d⊠
210	1N1184	100	35	140C	500	8.3m	190C	Si	DO5
211	DD711	100	35	140B	500	10m	175J	Si△	S533
212	SSiE1410	150	35		375	10m	175J	Si	S559
213▼	TRA1110	150	35					Si	D021
214	SSiE1110	150	35	120C	330	10m	150J	Si△	M324a⊠
215	SSiE1210	150	35	120C	330	10m	175J	Si	M1218
216	1N1185	150	35	140C	500	8.3m	190C	Si	DO5
217	1N1459	200	35				190J	Si	M56d
218▼	TRA1120	200	35					Si	D021
219	35AD200	200	35	50C	375		175J	Si	DO5
220	FB3502	200	35	55C	400	10m	150	Si	

SYMBOLS AND CODES EXPLAINED IN INTERPRETER

5. GENERAL-PURPOSE RECTIFIERS - $I_0 \geq 25$ A (Cont'd)

IN ORDER OF: (1) IO MAX (2) PIV (3) ° TEMP & (4) TYPE NMBER

LINE No.	4 TYPE NUMBER	2 PIV (V)	MAX AVG FWD DC CURRENT 1 Io MAX (A)	3 @ TEMP (°C)	MAX RATING SURGE CURR PEAK 1 Cy (A)	PULSE WIDTH (s)	MAX. TEMP (°C)	MAT	DRAWING No.
1	NCR35-200	200	35	55C	500		175C	Si	DO5
2	T483A	200	35	75C	500	8.3m	125J	Si	M1332c
3	BYV92-200	200	35	100	500	10m	150	Si	DO5
4	1N4525	200	35	115C	500		175C	Si	DO5
5	ST4-20	200	35	135C	500		175J	Si	S187d⊠
6	DD713	200	35	140B	500	10m	175J	Si△	S533
7	1N1460	300	35				190J	Si	M56d
8	SSiE1420	300	35		375	10m	175J	Si	S559
9	NCR35-300	300	35	55C	500			Si	M1024
10	BYV92-300	300	35	100	500	10m	150	Si	DO5
11	SSiE1120	300	35	120C	300	10m	150J	Si△	M324a⊠
12	SSiE1220	300	35	120C	300	10m	175J	Si	M1218
13	ST4-30	300	35	135C	500		175J	Si	S187d⊠
14	1N1461	400	35				190J	Si	M56d
15	35AD400	400	35	50C	375		175J	Si	DO5
16	FB3504	400	35	55C	400	10m	150	Si	
17	NCR35-400	400	35	55C	500			Si	M1024
18	BYV92-400	400	35	100	500	10m	150	Si	DO5
19	1N4526	400	35	115C	500		175C	Si	DO5
20	ST4-40	400	35	135C	500		175J	Si	S187d⊠
21	DD716	400	35	140B	500	10m	175J	Si△	S533
22▼	TRA1130	450	35					Si	D021
23	SSiE1130	500	35	120C	300	10m	150J	Si△	M324a⊠
24	SSiE1230	500	35	120C	300	10m	175J	Si	M1218
25	ST4-50	500	35	135C	500		175J	Si	S187d⊠
26▼	TRA1140	600	35					Si	D021
27	35AD600	600	35	50C	375		175J	Si	DO5
28	FB3506	600	35	55C	400	10m	150	Si	
29	NCR35-600	600	35	55C	500			Si	M1024
30	T483C	600	35	75C	500	8.3m	125J	Si	M1332c
31	1N4527	600	35	115C	500		175C	Si	DO5
32	ST4-60	600	35	135C	500		175J	Si	S187d⊠
33	SSiE1440	700	35		375	10m	175J	Si	S559
34	SSiE1140	700	35	120C	300	10m	150J	Si△	M324a⊠
35	SSiE1240	700	35	120C	300	10m	175J	Si	M1218
36	35AD800	800	35	50C	375		175J	Si	DO5
37	1N4528	800	35	115C	500		175C	Si	DO5
38	1N3777	800	35	140C	500		190B	Si	DO5
39	R631	100	36	100C	250	3.8m	160J	Si	M463h
40	R622	200	36	100C	250	3.8m	160J	Si	M463h
41	R632	200	36	100C	250	3.8m	160J	Si	M463h
42	R624	400	36	100C	250	3.8m	160J	Si	M463h
43	R634	400	36	100C	250	3.8m	160J	Si	M463h
44	R626	600	36	100C	250	3.8m	160J	Si	M463h
45	R636	600	36	100C	250	3.8m	160J	Si	M463h
46	R628	800	36	100C	250	3.8m	160J	Si	M463h
47	R638	800	36	100C	250	3.8m	160J	Si	M463h
48	1N248A	50	37	40A	600		175J	Si	DO5
49	1N248B	50	37	40A	600		175J	Si	DO5
50	1N1301	50	37	120C	600		175C	Si	DO5
51	F4A3	50	37	123C	600		190C	Si	DO5
52	1N249A	100	37	40A	600		175J	Si	DO5
53	1N1302	100	37	120C	600		175C	Si	DO5
54	F4B3	100	37	123C	600		190C	Si	DO5
55	1N250A	200	37	120C	600		175J	Si	DO5
56	1N250B	200	37	120C	350		175J	Si	DO5
57	1N1304	200	37	120C	600		175C	Si	DO5
58	F4C3	200	37	123C	600		190C	Si	DO5
59	F4D3	250	37	123C	600		190C	Si	DO5
60	1N1306	300	37	120C	600		175C	Si	DO5
61	F4E3	300	37	123C	600		190C	Si	DO5
62	F4F3	350	37	123C	600		190C	Si	DO5
63	F4G3	400	37	123C	600		190C	Si	DO5
64	F4H3	500	37	123C	600		190C	Si	DO5
65	F4K3	600	37	123C	600		190C	Si	DO5
66	F4M3	700	37	123C	600		190C	Si	DO5
67	F4N3	800	37	123C	600		190C	Si	DO5
68	SCBK15FF	150	38	55C	375		175J	Si	M1040
69	D24/400B	400	38	83C	510	10m	150J	Si	S493a
70	D24/400C	400	38	83C	510	10m	150J	Si	S493
71	DD31N400	400	38	83C	550	10m	150J	Si	20
72	DD31S800	800	38	82C	470	10m	150J	Si	20
73	D24/800B	800	38	83C	510	10m	150J	Si	S493a
74	D24/800C	800	38	83C	510	10m	150J	Si	S493
75	DD31N800	800	38	83C	550	10m	150J	Si	20
76	SCDAS4F	400	39	55C	750		175J	Si	M495
77	HCR1020	20	40	25			110J	Si	C202
78♦	MBR4020	20	40	70C	800	8.3m	150J	Si$	DO5
79	USD420	20	40	115C	700	8.3m	175J	♦	DO4
80	HCR1025	25	40	25			110J	Si	C202
81	HCR1030	30	40	25			110J	Si	C202
82	MBR4030PF	30	40	50C	800		95A	Si$	DO21
83♦	MBR4030	30	40	70C	800	8.3m	150J	Si$	DO5
84	MBR4035	35	40		800		125J	Si	DO5
85	USD435	35	40	115C	700	8.3m	175J	♦	DO4
86	HCR1040	40	40	25			110J	Si	C202
87▼	UBS430	40	40	25C	150	1.0m	175A	Si	TO203
88	MBR4040	40	40	70C	800	8.3m	150J	Si$	DO5
89	USD445	45	40	115C	700	8.3m	175J	♦	DO4
90	40A50	50	40		800			Si	DO5
91	HCR1050	50	40	25			110J	Si	C202
92	R730	50	40	25A	400	8.3m	150J	Si	C199*⊠
93	R730X	50	40	25A	250	8.3m	150J	Si	C199*⊠
94	40AD50	50	40	50C	400		175J	Si	DO5
95▼	S40-050	50	40	50	700		175J	Si	u5g
96	S40A05	50	40	125C	500	8.3m	175A	Si	DO5
97	40HF5	50	40	140C	500 §		180J	Si	S21h⊠
98	1N1183A	50	40	150C	800	8.3m	200J	Si	DO5
99	G4A3	50	40	150C	1.5k		175J	Si	DO8
100	R4100040	50	40	150	800	8.3m	200	Si	DO5
101	S30405	50	40	154C	800	8.3m	190J	Si△	S488b⊠
102	HCR1070	70	40	25			110J	Si	C202
103	1SM40	80	40		500			Si	S514
104	40A100	100	40		800			Si	DO5
105	HCR1100	100	40	25			110J	Si	C202
106	R731	100	40	25A	400	8.3m	150J	Si	C199*⊠
107	R731X	100	40	25A	250	8.3m	150J	Si	C199*⊠
108	40AD100	100	40	50C	400		175J	Si	DO5
109▼	S40-100	100	40	50	700		175J	Si	u5g
110	RP1040	100	40	100C	700	10m	150J	Si	DO5
111	10M10	100	40	104B	800	10m	130A	Si	S4s
112	10MA10	100	40	104C	800	10m	130J	Si	S527a
113	41F1FM	100	40	106C	700	10m	150J	Si△	M1140
114	41R1FM	100	40	106C	700	10m	150J	Si△	M1140
115	M41-100	100	40	120C	400 §	10m	165S	Si	S437⊠
116	S40A1	100	40	125C	500	8.3m	175A	Si	DO5
117	40HF10	100	40	140C	500 §	8.3m	180J	Si△	DO5⊠
118	1N1184A	100	40	150C	800	8.3m	200J	Si	DO5
119	G4B3	100	40	150C	1.5k		175J	Si	DO8
120	R4100140	100	40	150	800	8.3m	200	Si	DO5
121	S30410	100	40	154C	800	8.3m	190J	Si△	S488b⊠
122	S1GN41	100	40	200B	490	10m	250J	Si	S322a⊠
123	40A150	150	40		800			Si	DO5
124	1N1185A	150	40	150C	800	8.3m	200J	Si	DO5
125	S30415	150	40	154C	800	8.3m	190J	Si△	S488b⊠
126	2SM40	160	40		500			Si	S514
127	40A200	200	40		800			Si	DO5
128	R732	200	40	25A	400	8.3m	150J	Si	C199*⊠
129	R732X	200	40	25A	250	8.3m	150J	Si	C199*⊠
130	40AD200	200	40	50C	400		175J	Si	DO5
131▼	S40-200	200	40	50	700		175J	Si	u5g
132	DRA402	200	40	100C	800 §	10m	150J	Si	C259
133	RP2040	200	40	100C	700	10m	150J	Si	DO5
134	10M20	200	40	104B	800	10m	130A	Si	S4s
135	10MA20	200	40	104C	800	10m	130J	Si	S527a
136	41F2FM	200	40	106C	700	10m	150J	Si△	M1140
137	41R2FM	200	40	106C	700	10m	150J	Si△	M1140
138	PH40-200	200	40	118A	400	10m	150J	Si	DO5⊠
139	M41-200	200	40	120C	400 §	10m	165S	Si	S437⊠
140	S40A2	200	40	125C	500	8.3m	175A	Si	DO5
141	40HF20	200	40	140C	500 §	8.3m	180J	Si△	DO5⊠
142▼	SD040N02P	200	40	146C	600	10m	180J	Si	DO5
143▼	SD040R02P	200	40	146C	600	10m	180J	Si	DO5
144▼	SD041N02P	200	40	146C	600	10m	180J	Si	S567a
145▼	SD041R02P	200	40	146C	600	10m	180J	Si	S567a
146	1N1186A	200	40	150C	800	8.3m	200J	Si	DO5
147	BYZ14	200	40	150J	800	10m	150J	Si△	S72j
148	BYZ15	200	40	150J	800	10m	150J	Si△	S72k
149	G4C3	200	40	150C	1.5k		175J	Si	DO8
150	R4100240	200	40	150	800	8.3m	200	Si	DO5
151	S30420	200	40	154C	800	8.3m	190J	Si△	S488b⊠
152	S2GN41	200	40	200B	490	10m	250J	Si	S322a⊠
153	G4D3	250	40	150C	1.5k		175J	Si	DO8
154	S30425	250	40	154C	800	8.3m	190J	Si△	S488b⊠
155	40A300	300	40		800			Si	DO5
156	1N5409	300	40	100C	1.0k§		175C	Si	DO5
157	10M30	300	40	104B	800	10m	130A	Si	S4s
158	10MA30	300	40	104C	800	10m	130J	Si	S527a
159	41F3FM	300	40	106C	700	10m	150J	Si△	M1140
160	41R3FM	300	40	106C	700	10m	150J	Si△	M1140
161	1N1480	300	40	120C	8.0k		190J	Si	M56b
162	BYX52-300	300	40	125B	800 §	10m	175J	Si	DO5⊠
163	BYX97-300	300	40	125A	800 §	10m	150J	Si	S29b⊠
164	S40A3	300	40	125C	500	8.3m	175A	Si	DO5
165	40HF30	300	40	140C	500 §		180J	Si	S21h⊠
166	1N1187A	300	40	150C	800		200C	Si△	DO5
167	G4E3	300	40	150C	1.5k		175J	Si	DO8
168	R4100340	300	40	150	800	8.3m	200	Si	DO5
169	S30430	300	40	154C	800	8.3m	190J	Si△	S488b⊠
170	S3GN41	300	40	200B	490	10m	250J	Si	S322a⊠
171	4SM40	320	40		500			Si	S514
172	G4F3	350	40	150C	1.5k		175J	Si	DO8
173	S30435	350	40	154C	800	8.3m	190J	Si△	S488b⊠
174	40A400	400	40		800			Si	DO5
175	R734	400	40	25A	400	8.3m	150J	Si	C199*⊠
176	40AD400	400	40	50C	400		175J	Si	DO5
177▼	S40-400	400	40	50	700		175J	Si	u5g
178	VBO20-04N01	400	40	55C	300	10m	150J	Si	
179	DRA404	400	40	100C	800 §	10m	150J	Si	C259
180	RP4040	400	40	100C	700	10m	150J	Si	DO5
181	10M40	400	40	104B	800	10m	130A	Si	S4s
182	10MA40	400	40	104C	800	10m	130J	Si	S527a
183	SR30D-8R	400	40	104C	800	8.3m	130	Si	S19aa
184	M41-400	400	40	120C	400 §	10m	165S	Si	S437⊠
185	SR30D-8S	400	40	122C	900	8.3m	150	Si	S19aa
186	S40A4	400	40	125C	500	8.3m	175A	Si	DO5
187	40HF40	400	40	140C	500 §	8.3m	180J	Si△	DO5⊠
188▼	SD040N04P	400	40	146C	600	10m	180J	Si	DO5
189▼	SD040R04P	400	40	146C	600	10m	180J	Si	DO5
190▼	SD041N04P	400	40	146C	600	10m	180J	Si	S567a
191▼	SD041R04P	400	40	146C	600	10m	180J	Si	S567a
192	1N1188A	400	40	150C	800		200C	Si△	DO5
193	BYY15	400	40	150J	800 §	10m	150J	Si	S72j
194	G4G3	400	40	150C	1.5k		175J	Si	DO8
195	R4100440	400	40	150	800	8.3m	200	Si	DO5
196	S30440	400	40	154C	800	8.3m	190J	Si△	S488b⊠
197	S4GN41	400	40	200B	490	10m	250J	Si	S322a⊠
198	S30445	450	40	154C	800	8.3m	190J	Si△	S488b⊠
199	6SM40	480	40		500			Si	S514
200	40A500	500	40		800			Si	DO5
201	10M50	500	40	104B	800	10m	130A	Si	S4s
202	S40A5	500	40	125C	500	8.3m	175A	Si	DO5
203	40HF50	500	40	140C	500 §		180J	Si	S21h⊠
204	1N1189A	500	40	150C	800		200C	Si△	DO5
205	G4H3	500	40	150C	1.5k		175J	Si	DO8
206	R4100540	500	40	150	800	8.3m	200	Si	DO5
207	S30450	500	40	154C	800	8.3m	190J	Si△	S488b⊠
208	S5GN41	500	40	200B	490	10m	250J	Si	S322a⊠
209	40A600	600	40		800			Si	DO5
210	40AD600	600	40	50C	400		175J	Si	DO5
211▼	S40-600	600	40	50	700		175J	Si	u5g
212	DRA406	600	40	100C	800 §	10m	150J	Si	C259
213	RP6040	600	40	100C	700	10m	150J	Si	DO5
214	10M60	600	40	104B	800	10m	130A	Si	S4s
215	10MA60	600	40	104C	800	10m	130J	Si	S527a
216	MZ41-600	600	40	115C	400		150J	Si	DO5
217	MZ41-600R	600	40	115C	400		150J	Si	DO5
218	PH40-600	600	40	118A	400	10m	150J	Si	DO5⊠
219	M41-600	600	40	120C	400 §	10m	165S	Si	S437⊠
220	BYX52-600	600	40	125B	800 §	10m	175J	Si	DO5⊠

SYMBOLS AND CODES EXPLAINED IN INTERPRETER

5. GENERAL-PURPOSE RECTIFIERS - $I_O \geq 25$ A (Cont'd)

IN ORDER OF: (1) IO MAX (2) PIV
(3) * TEMP & (4) TYPE NMBER

LINE No.	4 TYPE NUMBER	2 PIV (V)	MAX AVG FWD DC CURRENT 1 Io MAX (A)	3 @ TEMP (°C)	MAX RATING SURGE CURR PEAK 1 Cy (A)	PULSE WIDTH (s)	MAX. TEMP (°C)	MAT	DRAWING No.
1	BYX97-600	600	40	125A	800 §	10m	150J	Si	S29b⊠
2	S40A6	600	40	125C	500	8.3m	175A	Si	DO5
3	40HF60	600	40	140C	500 §	8.3m	180J	SiΔ	DO5⊠
4▼	SD040N06P	600	40	146C	600	10m	180J	Si	DO5
5▼	SD040R06P	600	40	146C	600	10m	180J	Si	DO5
6▼	SD041N06P	600	40	146C	600	10m	180J	Si	S567a
7▼	SD041R06P	600	40	146C	600	10m	180J	Si	S567a
8	1N1190A	600	40	150C	800		200C	SiΔ	DO5
9	BYY77	600	40	150J	800		100B	SiΔ	S72j
10	BYY78	600	40	150J	800		100B	SiΔ	S72k
11	G4K3	600	40	150C	1.5k		175J	Si	DO8
12	R4100640	600	40	150	800	8.3m	200	Si	DO5
13	S30460	600	40	154C	800	8.3m	190J	SiΔ	S488b⊠
14	S6GN41	600	40	200B	490	10m	250J	Si	S322a⊠
15	8SM40	640	40		500			Si	S514
16	40HF70	700	40	140C	500 §		180J	Si	S21h⊠
17	G4M3	700	40	150C	1.5k		175J	Si	DO8
18	10SM40	800	40		500			Si	S514
19▼	SR4008	800	40					Si	D05
20	40AD800	800	40	50C	400		175J	Si	DO5
21▼	S40-800	800	40	50	700		175J	Si	u5g
22	VBO20-08N01	800	40	55C	300	10m	150J	Si	
23	DRA408	800	40	100C	800 §	10m	150J	Si	C259
24	RP8040	800	40	100C	700	10m	150J	Si	DO5
25	10M80	800	40	104B	800	10m	130A	Si	S4s
26	10MA80	800	40	104C	800	10m	130J	Si	S527a
27	SR30D-16R	800	40	104C	800	8.3m	130	Si	S19aa
28	MZ41-800	800	40	115C	400		150J	Si	DO5
29	MZ41-800R	800	40	115C	400		150J	Si	DO5
30	M41-800	800	40	120C	400 §	10m	165S	Si	S437⊠
31	SR30D-16S	800	40	122C	900	8.3m	150	Si	S19aa
32	BYX15	800	40	125B	800 §	10m	150J	Si	S72b
33	BYX16	800	40	125B	800 §	10m	150J	Si	S72e
34	S40A8	800	40	125C	500	8.3m	175A	Si	DO5
35	40HF80	800	40	140C	500 §	8.3m	180J	SiΔ	DO5⊠
36▼	SD040N08P	800	40	146C	600	10m	180J	Si	DO5
37▼	SD040R08P	800	40	146C	600	10m	180J	Si	DO5
38▼	SD041N08P	800	40	146C	600	10m	180J	Si	S567a
39▼	SD041R08P	800	40	146C	600	10m	180J	Si	S567a
40	G4N3	800	40	150C	1.5k		175J	Si	DO8
41	R4100840	800	40	150C	800		200J	Si	DO5⊠
42	BYX52-900	900	40	125B	800 §	10m	175J	Si	DO5⊠
43	BYX97-900	900	40	125A	650	10m	150J	Si	S29b⊠
44	40HF90	900	40	140C	500 §		180J	Si	S21h⊠
45▼	S40-1000	1.0k	40		700		175J	Si	u5g
46▼	S40-1200	1.2k	40		700		175J	Si	u5g
47	DS22-08A	800	41	110C	450	10m	180J	Si	
48	SCPAR4F	400	42		240		150	Si	M977
49	DS22-04A	400	42	45A	450 §	10m	180J	Si	S408c
50	SCNAR4F	400	42	55C	240		150	Si	M977
51	PR347-RT	100	44.6		1.2k			Si	DO5
52	1N2446	50	45	60C	300		175B	SiΔ	DO5
53	F5A3	50	45	122C	700		190C	Si	DO5
54	S3405	50	45	122C	700	8.3m	190J	SiΔ	S488b⊠
55♦	BYY57/75H	75	45	141C	400	10m	175J	Si	M324a
56♦	BYY58/75H	75	45	141	375	10m	175J	Si	M324a
57	1N2447	100	45	60C	300		175B	SiΔ	DO5
58	F5B3	100	45	122C	700		190C	Si	DO5
59	S3410	100	45	122C	700	8.3m	190J	SiΔ	S488b⊠
60	1N2448	150	45	60C	300		175B	SiΔ	DO5
61	S3415	150	45	122C	700	8.3m	190J	SiΔ	S488b⊠
62♦	BYY57/150H	150	45	141C	400	10m	175J	Si	M324a
63♦	BYY58/150H	150	45	141	375	10m	175J	Si	M324a
64	1N2449	200	45	60C	300		175B	SiΔ	DO5
65	F5C3	200	45	122C	700		190C	Si	DO5
66	S3420	200	45	122C	700	8.3m	190J	SiΔ	S488b⊠
67	1N2450	250	45	60C	300		175B	SiΔ	DO5
68	F5D3	250	45	122C	700		190C	Si	DO5
69	S3425	250	45	122C	700	8.3m	190J	SiΔ	S488b⊠
70	1N2451	300	45	60C	300		175B	SiΔ	DO5
71	SG53R	300	45	120C	250	10m	150S	Si	S19z
72	SG53S	300	45	120C	250	10m	150S	Si	S19z
73	F5E3	300	45	122C	700		190C	Si	DO5
74	S3430	300	45	122C	700	8.3m	190J	SiΔ	S488b⊠
75♦	BYY57/300H	300	45	141	400	10m	175J	Si	M324a
76♦	BYY58/300H	300	45	141	375	10m	175J	Si	M324a
77	1N2452	350	45	60C	300		175B	SiΔ	DO5
78	F5F3	350	45	122C	700		190C	Si	DO5
79	S3435	350	45	122C	700	8.3m	190J	SiΔ	S488b⊠
80	1N2453	400	45	60C	300		175B	SiΔ	DO5
81	SKKD46-04	400	45	86C	700		125J	Si	Y240
82	F5G3	400	45	122C	700		190C	Si	DO5
83	S3440	400	45	122C	700	8.3m	190J	SiΔ	S488b⊠
84	S3445	450	45	122C	700	8.3m	190J	SiΔ	S488b⊠
85	1N2454	500	45	60C	300		175B	SiΔ	DO5
86	F5H3	500	45	122C	700		190C	Si	DO5
87	S3450	500	45	122C	700	8.3m	190J	SiΔ	S488b⊠
88♦	BYY57/500H	500	45	141	400	10m	175J	Si	M324a
89♦	BYY58/500H	500	45	141	375	10m	175J	Si	M324a
90	1N2455	600	45	60C	300		175B	SiΔ	DO5
91	SKKD46-06	600	45	86C	700		125J	Si	Y240
92	SG56R	600	45	120C	250	10m	150S	Si	S19z
93	SG56S	600	45	120C	250	10m	150S	Si	S19z
94	F5K3	600	45	122C	700		190C	Si	DO5
95	S3460	600	45	122C	700	8.3m	190J	SiΔ	S488b⊠
96	1N2456	700	45	60C	300		175B	SiΔ	DO5
97	F5M3	700	45	122C	700		190C	Si	DO5
98	S3470	700	45	122C	700	8.3m	190J	SiΔ	S488b⊠
99♦	BYY57/700H	700	45	141	400	10m	175J	Si	M324a
100♦	BYY58/700H	700	45	141	375	10m	175J	Si	M324a
101	1N2457	800	45	60C	300		175B	SiΔ	DO5
102	SKKD46-08	800	45	86C	700		125J	Si	Y240
103	F5N3	800	45	122C	700		190C	Si	DO5
104	S3480	800	45	122C	700	8.3m	190J	SiΔ	S488b⊠
105	S3490	900	45	122C	700	8.3m	190J	SiΔ	S488b⊠
106	SCDAS15FF	150	46	55C	750		175J	Si	M495
107	BYX56-600	600	48	112B	800	10m	175J	Si	DO5⊠
108	BYX56-800	800	48	112B	800	10m	175J	Si	DO5⊠

$I_O \geq 50$ A

LINE No.	4 TYPE NUMBER	2 PIV (V)	MAX AVG FWD DC CURRENT 1 Io MAX (A)	3 @ TEMP (°C)	MAX RATING SURGE CURR PEAK 1 Cy (A)	PULSE WIDTH (s)	MAX. TEMP (°C)	MAT	DRAWING No.
111	SD10	12 %	50	80C	800	m	125J	Si	E203b⊠
112	SD15	18 %	50	80C	800		125J	Si	E203b⊠
113	SD20	24 %	50	80C	800		125J	Si	E203b⊠
114	1N6097	30	50	70A	800 §		125A	Si	E203b
115	SD25	30 %	50	80C	800		125J	Si	E203b⊠
116	BYV22-30	30	50	100A	800	10m	125J	Si	DO5
117	BYV22-35	35	50	100A	800	10m	125J	Si	DO5
118	1N6098	40	50	70A	800 §		125A	Si	E203b
119	BYV22-40	40	50	100A	800	10m	125J	Si	DO5
120	SD51#B	42 %	50	80C	800		125J	Si	E203b⊠
121	SDR7001	50	50		500			Si#	DO5
122	50AD50	50	50	50C	425		175J	Si	DO5
123	1N411B	50	50	100C	525 §		175C	Si	DO8
124	VHE2601	50	50	115	500	16m	175J	Si	TO3
125	DD810A(A)	50	50	136B	600	10m	175J	SiΔ	S533
126	1N2172	50	50	150C	525		175C	Si	DO8
127	8AF05NLH	50	50	150C	628	8.3m	195J	Si	M1278b
128	8AF05NLV	50	50	150C	628	8.3m	195J	Si	M1278
129	8AF05NPP	50	50	150C	628	8.3m	195J	Si	M1278a
130	MR5005	50	50	150C	600		195J	Si	M80b
131	SR5005	50	50	150C	600	8.3m	195	Si	DO21
132	SDR7002	80	50		500			Si#	DO5
133	1N1462	100	50				190J	Si	M56c
134	SDR7003	100	50		500			Si#	DO5
135	SUES503	100	50		700	8.3m	175J	Si	DO5
136	50AD100	100	50	50C	425		175J	Si	DO5
137	ST5A10	100	50	55A	1.0k		190J	Si	DO5⊠
138	1N412B	100	50	100C	525 §		175C	Si	DO8
139	VHE2602	100	50	115	500	16m	175J	Si	TO3
140	DD811A(A)	100	50	136B	600	10m	175J	SiΔ	S533
141	1N2173	100	50	150C	525		175C	Si	DO8
142	8AF1NLH	100	50	150C	628	8.3m	195J	Si	M1278b
143	8AF1NLV	100	50	150C	628	8.3m	195J	Si	M1278
144	8AF1NPP	100	50	150C	628	8.3m	195J	Si	M1278a
145	MR5010	100	50	150C	600		195J	Si	M80b
146	SR5010	100	50	150C	600	8.3m	195	Si	DO21
147	SDR7004	120	50		500			Si#	DO5
148	SUES504	125	50		700	8.3m	175J	Si	DO5
149	SDR7005	140	50		500			Si#	DO5
150	SUES505	150	50		700	8.3m	175J	Si	DO5
151	VHE2603	150	50	115	500	16m	175J	Si	TO3
152	1N1680	150	50	150C	700	8.3m	165C	Si	S8q
153	1N1463	200	50				190J	Si	M56c
154	1N2788	200	50	40A	600		175C	Si	DO5⊠
155	KGD1420SX	200	50	45A	250	10m		Si	M1086
156	50AD200	200	50	50C	425		175J	Si	DO5
157	ST5A20	200	50	55A	1.0k		190J	Si	DO5⊠
158	N19C	200	50	60C	940	8.3m	150J	Si	S566⊠
159	N20C	200	50	60C	850	10m	150J	Si	S566⊠
160	T481A	200	50	75B	800	8.3m	125A	Si	M1332a
161	T484A	200	50	75C	500	8.3m	125J	Si	M1332d
162	T485A	200	50	75C	500	8.3m	125J	Si	M1332e
163	1N413B	200	50	100C	525 §		175C	Si	DO8
164	SKN45/02	200	50	100C	700	10m	180J	Si	S171y⊠
165	SKN46/02	200	50	100C	600	10m	180J	Si	DO5
166	SKR45/02	200	50	100C	600	10m	180J	Si	DO5
167	SKR46/02	200	50	100C	600	10m	180J	Si	DO5
168	VHE2604	200	50	115	500	16m	175J	Si	TO3
169	1N3968	200	50	120C	600		150A	SiΔ	DO5Δ#
170	DD813A(A)	200	50	136B	600	10m	175J	SiΔ	S533
171	1N2174	200	50	150C	525		175C	Si	DO8
172	8AF2NLH	200	50	150C	628	8.3m	195J	Si	M1278b
173	8AF2NLV	200	50	150C	628	8.3m	195J	Si	M1278
174	8AF2NPP	200	50	150C	628	8.3m	195J	Si	M1278a
175	MR5020	200	50	150C	600		195J	Si	M80b
176	SR5020	200	50	150C	600	8.3m	195	Si	DO21
177	1N1681	250	50	150C	700	8.3m	165C	Si	S8q
178	1N1464	300	50				190J	Si	M56c
179	SDR8007	300	50		800			Si#	DO5
180	ST5A30	300	50	55A	1.0k		190J	Si	DO5⊠
181	N03C	300 %	50	60C	940	8.3m	150J	Si	S519
182	N04C	300 %	50	60C	850	10m	150J	Si	S519a
183	1N1682	300	50	150C	700	8.3m	165C	Si	S8q
184	MR1205FL	300	50	150C	800	8.3m	190J	Si	M226⊠
185	MR5030	300	50	150C	600		195J	Si	M80b
186	SR5030	300	50	150C	600	8.3m	195	Si	DO21
187	1N1683	350	50	150C	700	8.3m	165C	Si	S8q
188	1N1465	400	50				190J	Si	M56c
189	SDR8008	400	50		800			Si#	DO5
190	1N2789	400	50	40A	600		175C	Si	DO5⊠
191	KGD1421SX	400	50	45A	250			Si	M1086
192	50AD400	400	50	50C	425		175J	Si	DO5
193	ST5A40	400	50	55A	1.0k		190J	Si	DO5⊠
194	N19E	400	50	60C	940	8.3m	150J	Si	S566⊠
195	N20E	400	50	60C	850	10m	150J	Si	S566⊠
196	T481B	400	50	75B	800	8.3m	125A	Si	M1332a
197	T483B	400	50	75B	800	8.3m	125	Si	M1332c
198	T484B	400	50	75B	800	8.3m	125	Si	M1332d
199	T485B	400	50	75B	800	8.3m	125	Si	M1332e
200	SKN45/04	400	50	100C	700	10m	180J	Si	S171y⊠
201	SKN46/04	400	50	100C	600	10m	180J	Si	DO5
202	SKR45/04	400	50	100C	600	10m	180J	Si	DO5
203	SKR46/04	400	50	100C	600	10m	180J	Si	DO5
204	1N3969	400	50	120C	600		150A	SiΔ	DO5Δ#
205	DD816A(A)	400	50	136B	600	10m	175J	SiΔ	S533
206	1N1684	400	50	150C	700	8.3m	165C	Si	S8q
207	8AF4NLH	400	50	150C	628	8.3m	195J	Si	M1278b
208	8AF4NLV	400	50	150C	628	8.3m	195J	Si	M1278
209	8AF4NPP	400	50	150C	628	8.3m	195J	Si	M1278a
210	MR5040	400	50	150C	600		195J	Si	M80b
211	SR5040	400	50	150C	600	8.3m	195	Si	DO21
212	SDR8009	450	50		800			Si#	DO5
213	1N1685	450	50	150C	700	8.3m	165C	Si	S8q
214	ST5A50	500	50	55A	1.0k		190J	Si	DO5⊠
215	N03E	500 %	50	60C	940	8.3m	150J	Si	S519
216	N04E	500 %	50	60C	850	10m	150J	Si	S519a
217	1N1686	500	50	150C	700	8.3m	165C	Si	S8q
218	SCPAR6	600	50		300		150	Si	M977
219	50AD600	600	50	50C	425		175J	Si	DO5
220	SCNAR6	600	50	55C	300		150	Si	M977

SYMBOLS AND CODES
EXPLAINED IN INTERPRETER

5. GENERAL-PURPOSE RECTIFIERS - $I_O \geq 50$ A (Cont'd)

IN ORDER OF: (1) IO MAX (2) PIV
(3) ° TEMP & (4) TYPE NMBER

LINE No.	4 TYPE NUMBER	2 PIV (V)	MAX AVG FWD DC CURRENT 1 Io MAX (A)	3 @ TEMP (°C)	MAX RATING SURGE CURR PEAK 1 Cy (A)	PULSE WIDTH (s)	MAX. TEMP (°C)	MAT	DRAWING No.
1	ST5A60	600	50	55A	1.0k		190J	Si	DO5⊠
2	N19G	600	50	60C	940	8.3m	150J	Si	S566⊠
3	N20G	600	50	60C	850	10m	150J	Si	S566⊠
4	SCDAR6	600	50	75C	300		150	Si	M977
5	T481C	600	50	75B	800	8.3m	125A	Si	M1332a
6	T484C	600	50	75C	500	8.3m	125J		M1332d
7	T485C	600	50	75C	500	8.3m	125J	Si	M1332e
8	1N3970	600	50	120C	600		150A	Si△	DO5△#
9	1N1687	600	50	150C	700	8.3m	165C	Si	S8q
10	MR1209FL	600	50	150C	800	8.3m	190J	Si	M226⊠
11	KGD1422SX	700	50	45A	250			Si	M1086
12	1N1688	700	50	150C	700	8.3m	165C	Si	S8q
13	50AD800	800	50	50C	425		175J	Si	DO5
14	N03G	800 %	50	60C	940	8.3m	150J	Si	S519
15	N04G	800 %	50	60C	850	10m	150J	Si	S519a
16	N19J	800	50	60C	940	8.3m	150J	Si	S566⊠
17	N20J	800	50	60C	850	10m	150J	Si	S566⊠
18	T481D	800	50	75B	800	8.3m	125A	Si	M1332a
19	T483D	800	50	75B	800	8.3m	125	Si	M1332c
20	T484D	800	50	75B	800	8.3m	125	Si	M1332d
21	T485D	800	50	75B	800	8.3m	125	Si	M1332e
22	SKR1M40/08	800	50	97C	700	10m	150J	Si	DO5
23	SKN45/08	800	50	100C	700	10m	180J	Si	S171y⊠
24	SKN46/08	800	50	100C	600	10m	180J	Si	DO5
25	SKR45/08	800	50	100C	600	10m	180J	Si	DO5
26	SKR46/08	800	50	100C	600	10m	180J	Si	DO5
27	1N3971	800	50	120C	600		150A	Si△	DO5△#
28	50LF11	800	50	135C	1.5k	10m	175J	Si	S168b
29	1N1689	800	50	150C	700	8.3m	165C	Si	S8q
30	1N1690	900	50	150C	700	8.3m	165C	Si	S8q
31	DS35-08A	800	51	115C	650	10m	180J	Si	
32	DS35-02A	200	52	45A	650 §	10m	180J	Si	S19u⊠
33	DS35-04A	400	52	45A	650 §	10m	180J	Si	S19u⊠
34	55HQ015	15	54	108A	955	5.0m	150J	Si	DO203
35	55HQ020	20	54	108A	955	5.0m	150J	Si	DO203
36	55HQ025	25	54	108A	955	5.0m	150J	Si	DO203
37	55HQ030	30	54	108A	955	5.0m	150J	Si	DO203
38	D34/400B	400	54	88C	550	10m	150J	Si	S493a
39	D34/400C	400	54	88C	550	10m	150J	Si	S493
40	D34/800B	800	54	88C	550	10m	150J	Si	S493a
41	D34/800C	800	54	88C	550	10m	150J	Si	S493
42	1SM55	80	55		1.0k			Si	S515
43	2SM55	160	55		1.0k			Si	S515
44	4SM55	320	55		1.0k			Si	S515
45	IRKD56-04	400	55	25J	1.6k		150J	Si	M1188a*
46	IRKE56-04	400	55	25J	1.6k		150J	Si	M1188b
47	6SM55	480	55		1.0k			Si	S515
48	IRKD56-06	600	55	25J	1.6k		150J	Si	M1188a*
49	IRKE56-06	600	55	25J	1.6k		150J	Si	M1188b
50	8SM55	640	55		1.0k			Si	S515
51	10SM55	800	55		1.0k			Si	S515
52	IRKD56-08	800	55	25J	1.6k		150J	Si	M1188a*
53	IRKE56-08	800	55	25J	1.6k		150J	Si	M1188b
54	60CDQ020	20	60	120C	380	6.0m	175J	♦	TO3
55	52HQ030	30	60	91C	765	6.0m	150J	♦	DO5
56	60CDQ030	30	60	120C	380	6.0m	175J	♦	TO3
57	52HQ035	35	60	91C	765	6.0m	150J	♦	DO5
58	50HQ035	35	60	96C	765	6.0m	150J	♦	DO5
59	60CDQ035	35	60	120C	380	6.0m	175J	♦	TO3
60	G60R4	40	60		800		110	Ge	DO5
61	52HQ040	40	60	91C	765	6.0m	150J	♦	DO5
62	50HQ040	40	60	96C	765	6.0m	150J	♦	DO5
63	60CDQ040	40	60	120C	380	6.0m	175J	♦	TO3
64	BYS95-40	40	60	138C	810		175J	Si	M1220*
65	BYS51	45	60		800	8.3m	150J	Si	S19ah
66	SD5171#B	45	60		800		150J	♦	DO5
67	BYS50	45	60	90C	840	8.3m	150J	Si	S19ag
68	52HQ045	45	60	91C	765	6.0m	150J	♦	DO5
69	60CDQ045	45	60	120C	380	6.0m	175J	♦	TO3
70	BYS95-45	45	60	138C	810		175J	Si	M1220*
71	GD60R4	48	60	25C	600		110J	Ge	TO3
72▼	SR6000	50	60					Si	D05
73	1N2458	50	60	60C	450		175B	Si△	DO5
74	1N2128	50	60	115C	700 §		175C	Si	DO5
75	R4040060	50	60	125C	1.0k		200C	Si	DO5⊠
76	BYS95-50	50	60	138C	810		175J	Si	M1220*
77	1N2128A	50	60	140C	900 §		200C	Si	DO5
78	R4140060	50	60	140C	900	5.0m	200J	△	DO5
79	60HQ060	60	60	96C	575	6.0m	175J	♦	DO5
80	60HQ080	80	60	96C	575	6.0m	175J	♦	DO5
81	60HQ090	90	60	96C	575	6.0m	175J	♦	DO5
82▼	SR6001	100	60					Si	D05
83	KGB0440SX	100	60	45A	260	10m		Si	M1086
84	1N2459	100	60	60C	450		175B	Si△	DO5
85	600HT1U	100	60	70C	500			Si	M1275
86	60HQ100	100	60	96C	575	6.0m	175J	♦	DO5
87	61F1FM	100	60	105C	1.0m	10m	150J	Si△	M1141
88	61R1FM	100	60	105C	1.0m	10m	150J	Si△	M1141
89	20MA10	100	60	108C	950	10m	150J	Si	S527a
90	SR60L-2R	100	60	110C	800 §	8.3m	150J	Si△	M1109
91	SR60L-2S	100	60	110B	800 §	8.3m	150J	Si△	M1109
92	1N2129	100	60	115C	700 §		175C	Si	DO5
93	60HF10	100	60	115C	670	6.0m	175J	Si	DO5
94	R4040160	100	60	125C	1.0k		200C	Si	DO5⊠
95	20M10	100	60	126B	1.0k	10m	175A	Si	S4t
96	60BC15	100	60	126C	550	10m	175J	Si	S4t
97	1N2129A	100	60	140C	900 §		200C	Si	DO5
98	R4140160	100	60	140C	900	5.0m	200J	△	DO5
99	1N2460	150	60	60C	450		175B	Si△	DO5
100	1N2130	150	60	115C	700 §		175C	Si	DO5
101	1N2130A	150	60	140C	900 §		200C	Si	DO5
102▼	SR6002	200	60					Si	D05
103	KGB0430SX	200	60	45A	260	10m		Si	M1086
104	1N2461	200	60	60C	450		175B	Si△	DO5
105	600HT2U	200	60	70C	500			Si	M1275
106	61F2FM	200	60	105C	1.0m	10m	150J	Si△	M1141
107	61R2FM	200	60	105C	1.0m	10m	150J	Si△	M1141
108	20MA20	200	60	108C	950	10m	150J	Si	S527a
109	SR60L-4R	200	60	110C	800 §	8.3m	150J	Si△	M1109
110	SR60L-4S	200	60	110B	800 §	8.3m	150J	Si△	M1109
111	1N2131	200	60	115C	700 §		175C	Si	DO5
112	60HF20	200	60	115C	670	6.0m	175J	Si	DO5
113	R4040260	200	60	125C	1.0k		200C	Si	DO5⊠
114	20M20	200	60	126B	1.0k	10m	175A	Si	S4t
115	60DC15	200	60	126C	550	10m	175J	Si	S4t
116	1N2131A	200	60	140C	900 §		200C	Si	DO5
117	R4140260	200	60	140C	900	5.0m	200J	△	DO5
118	1N2462	250	60	60C	450		175B	Si△	DO5
119	1N2132	250	60	115C	700 §		175C	Si	DO5
120	1N2132A	250	60	140C	900 §		200C	Si	DO5
121	1N2463	300	60	60C	450		175B	Si△	DO5
122	600HT3U	300	60	70C	500			Si	M1275
123	ESM244-300	300	60	100C	800	10m	165J	Si	DO5
124	61F3FM	300	60	105C	1.0m	10m	150J	Si△	M1141
125	61R3FM	300	60	105C	1.0m	10m	150J	Si△	M1141
126	20MA30	300	60	108C	950	10m	150J	Si	S527a
127	SR60L-6R	300	60	110C	800 §	8.3m	150J	Si△	M1109
128	SR60L-6S	300	60	110B	800 §	8.3m	150J	Si△	M1109
129	1N2133	300	60	115C	700 §		175C	Si	DO5
130	60HF30	300	60	115C	670	6.0m	175J	Si	DO5
131	SG63R	300	60	120C	1.0k	10m	150S	Si	S535
132	SG63S	300	60	120C	1.0k	10m	150S	Si	S535
133	R4040360	300	60	125C	1.0k		200C	Si	DO5⊠
134	20M30	300	60	126B	1.0k	10m	175A	Si	S4t
135	60FC15	300	60	126C	550	10m	175J	Si	S4t
136	1N2133A	300	60	140C	900 §		200C	Si	DO5
137	R4140360	300	60	140C	900	5.0m	200J	△	DO5
138	1N2464	350	60	60C	450		175B	Si△	DO5
139	1N2134	350	60	115C	700 §		175C	Si	DO5
140	1N2134A	350	60	140C	900 §		200C	Si	DO5
141▼	SR6004	400	60					Si	D05
142	HRSCDA4F	400	60	55	150			Si	C236 *
143	HRSCNA4F	400	60	55	150			Si	C236 *
144	HRSCPA4F	400	60	55	150			Si	C236 *
145	1N2465	400	60	60C	450		175B	Si△	DO5
146	600HT4U	400	60	70C	500			Si	M1275
147	RM60DZ-M	400	60	90C	1.2k§	8.3m	125J	Si	M1188
148▼	D60N400B	400	60	100C	1.3k§	10m	150J	Si	S567a
149▼	D60N400C	400	60	100C	1.3k§	10m	150J	Si	S571
150▼	D60N400U	400	60	100C	1.3k§	10m	150J	Si	S571
151▼	D60NR400B	400	60	100C	1.3k§	10m	150J	Si	S567a
152▼	D60NR400C	400	60	100C	1.3k§	10m	150J	Si	S571
153▼	D60NR400U	400	60	100C	1.3k§	10m	150J	Si	S571
154	20MA40	400	60	108C	950	10m	150J	Si	S527a
155	SR60L-8R	400	60	110C	800 §	8.3m	150J	Si△	M1109
156	SR60L-8S	400	60	110B	800 §	8.3m	150J	Si△	M1109
157	1N2135	400	60	115C	700 §		175C	Si	DO5
158	60HF40	400	60	115C	670	6.0m	175J	Si	DO5
159	R4040460	400	60	125C	1.0k		200C	Si	DO5⊠
160	20M40	400	60	126B	1.0k	10m	175A	Si	S4t
161	60GC15	400	60	126C	550	10m	175J	Si	S4t
162	1N2135A	400	60	140C	900 §		200C	Si	DO5
163	R4140460	400	60	140C	900	5.0m	200J	△	DO5
164	1N2136	450	60	115C	700 §		175C	Si	DO5
165	1N2136A	450	60	140C	900 §		200C	Si	DO5
166	KGB0431SX	500	60	45A	260	10m		Si	M1086
167	1N2466	500	60	60C	450		175B	Si△	DO5
168	ESM244-500	500	60	100C	800	10m	165J	Si	DO5
169	SR60L-10R	500	60	110C	800 §	8.3m	150J	Si△	M1109
170	SR60L-10S	500	60	110B	800 §	8.3m	150J	Si△	M1109
171	1N2137	500	60	115C	700 §		175C	Si	DO5
172	60HF50	500	60	115C	670	6.0m	175J	Si	DO5
173	R4040560	500	60	125C	1.0k		200C	Si	DO5⊠
174	20M50	500	60	126B	1.0k	10m	175A	Si	S4t
175	1N2137A	500	60	140C	900 §		200C	Si	DO5
176	R4140560	500	60	140C	900	5.0m	200J	△	DO5
177▼	SR6006	600	60					Si	D05
178	HRSCDA6	600	60	55	150			Si	C236 *
179	HRSCNA6	600	60	55	150			Si	C236 *
180	HRSCPA6	600	60	55	150			Si	C236 *
181	SCNA6	600	60	55A	300		150A	Si	C236
182	SCPA6	600	60	55A	300		150A	Si	C236
183	1N2467	600	60	60C	450		175B	Si△	DO5
184	600HT6U	600	60	70C	500			Si	M1275
185	20MA60	600	60	108C	950	10m	150J	Si	S527a
186	1N2138	600	60	115C	700 §		175C	Si	DO5
187	60HF60	600	60	115C	670	6.0m	175J	Si	DO5
188	SG66R	600	60	120C	1.0k	10m	150S	Si	S535
189	SG66S	600	60	120C	1.0k	10m	150S	Si	S535
190	R4040660	600	60	125C	1.0k		200C	Si	DO5⊠
191	20M60	600	60	126B	1.0k	10m	175A	Si	S4t
192	60JC15	600	60	126C	550	10m	175J	Si	S4t
193	1N2138A	600	60	140C	900 §		200C	Si	DO5
194	R4140660	600	60	140C	900	5.0m	200J	△	DO5
195	1N2468	700	60	60C	450		175B	Si△	DO5
196	R4140760	700	60	140C	900	5.0m	200J	△	DO5
197▼	SR6008	800	60					Si	D05
198	1N2469	800	60	60C	450		175B	Si△	DO5
199	600HT8U	800	60	70C	500			Si	M1275
200	RM60DZ-H	800	60	90C	1.2k§	8.3m	125J	Si	M1188
201▼	D60N800B	800	60	100C	1.3k§	10m	150J	Si	S567a
202▼	D60N800C	800	60	100C	1.3k§	10m	150J	Si	S571
203▼	D60N800U	800	60	100C	1.3k§	10m	150J	Si	S571
204▼	D60NR800B	800	60	100C	1.3k§	10m	150J	Si	S567a
205▼	D60NR800C	800	60	100C	1.3k§	10m	150J	Si	S571
206▼	D60NR800U	800	60	100C	1.3k§	10m	150J	Si	S571
207	20MA80	800	60	108C	950	10m	150J	Si	S527a
208	60HF80	800	60	115C	670	6.0m	175J	Si	DO5
209	R4040860	800	60	125C	1.0k		200C	Si	DO5⊠
210	20M80	800	60	126B	1.0k	10m	175A	Si	S4t
211	60LC15	800	60	126C	550	10m	175J	Si	S4t
212	R4140860	800	60	140C	900	5.0m	200J	△	DO5
213	R4140960	900	60	140C	900	5.0m	200J	△	DO5
214	M41-100R	100	63	115C	400		150J	Si	DO5
215	M41-200R	200	63	115C	400		150J	Si	DO5
216	M41-400R	400	63	115C	400		150J	Si	DO5
217	M41-600R	600	63	115C	400		150J	Si	DO5
218	M41-800R	800	63	115C	400		150J	Si	DO5
219	MDD42-04N1	400	64	94C	1.1k	10m	150J	Si	
220	MDD42-06N1	600	64	94C	1.1k	10m	150J	Si	

SYMBOLS AND CODES
EXPLAINED IN INTERPRETER

5. GENERAL-PURPOSE RECTIFIERS - $I_O \geq 50$ A (Cont'd)

IN ORDER OF: (1) IO MAX (2) PIV (3) ° TEMP & (4) TYPE NMBER

LINE No.	4 TYPE NUMBER	2 PIV (V)	MAX AVG FWD DC CURRENT 1 Io MAX (A)	3 @ TEMP (°C)	MAX RATING SURGE CURR PEAK 1 Cy (A)	PULSE WIDTH (s)	MAX. TEMP (°C)	MAT	DRAWING No.
1	MDD42-08N1	800	64	94C	1.1k	10m	150J	Si	
2	KGD1440SX	100	65	45A	260	10m		Si	M1086
3	KGD1430SX	200	65	45A	260	10m		Si	M1086
4	DS42-04A	400	65	45A	1.1k§	10m	180J	Si	S408d
5	D60/400B	400	65	94C	.80k	10m	150J	Si	S171g%
6	KGD1431SX	500	65	45A	260			Si	M1086
7	D60/800B	800	65	94C	.80k	10m	150J	Si	S171g%
8	DS42-08A	800	65	124C	1.1k	10m	180J	Si	
9	SKB60/04	400	67	85C	1.0k	10m	125J	Si	C254
10	SKB60/08	800	67	85C	1.0k	10m	125J	Si	C254
11	BYV23-30	30	70		1.5k	10m	125J	Si	DO5
12	BYV23-35	35	70		1.5k	10m	125J	Si	DO5
13	BYV23-40	40	70		1.5k	10m	125J	Si	DO5
14	BYV23-45	45	70		1.5k	10m	125J	Si	DO5
15▼	S70-050	50	70		1.2k		175J	Si	u5h
16	SDR8001	50	70		800			Si#	DO5
17▼	SR7000	50	70					Si	D05
18	SUES801	50	70		1.0k	8.3m	175J	Si	DO5
19	VHE801	50	70	100	1.0k	16m	175J	Si	E203b
20	R4040070	50	70	125C	1.2k		200C	Si	DO5Ø
21	F6A3	50	70	138C	1.2k		190C	Si	DO5
22	S3605	50	70	138C	1.2k	8.3m	190J	Si△	S488bØ
23	R4140070	50	70	140C	1.2k	5.0m	190J	△	DO5
24	1N1396	50	70	150C	1.2k		190J	Si	S14b
25	1N3139	50	70	150C	1.2k		150C	Si	S206
26	J4A3	50	70	150C	4.0k		175J	Si	DO9
27	1SM70	80	70		1.2k			Si	S515
28	SDR8002	80	70		800			Si#	DO5
29▼	S70-100	100	70		1.2k		175J	Si	u5h
30	SDR8003	100	70		800			Si#	DO5
31▼	SR7001	100	70					Si	D05
32	SUES802	100	70		1.0k	8.3m	175J	Si	DO5
33	ST11-10	100	70	90C	800		190J	Si	S187dØ
34	A77A	100	70	100C	750		150J	Si	DO5
35	VHE802	100	70	100	1.0k	16m	175J	Si	E203b
36	A72A	100	70	120C	1.0k		150J	Si	DO5
37	M71-100	100	70	120C	1.0k§	10m	150S	Si	S438Ø
38	M71-100R	100	70	120A	1.0k		150J	Si	DO5
39	R4040170	100	70	125C	1.2k		200C	Si	DO5Ø
40	S306010F	100	70	125C	1.2k		190J	Si	DO5Ø
41	F6B3	100	70	138C	1.2k		190C	Si	DO5
42	S3610	100	70	138C	1.2k	8.3m	190J	Si△	S488bØ
43	70HF10	100	70	140B	1.0k	8.3m	200A	Si△	DO5Ø
44	70HFR10	100	70	140C	1.2k		140C	Si	DO5
45	R4140170	100	70	140C	1.2k	5.0m	190J	△	DO5
46	1N1397	100	70	150C	1.2k		190J	Si	S14b
47	1N3140	100	70	150C	1.2k		150C	Si	S206
48	J4B3	100	70	150C	4.0k		175J	Si	DO9
49	S1GN72	100	70	200B	700	10m	250J	Si△	S322Ø
50	SDR8004	120	70		800			Si#	DO5
51	SDR8005	140	70		800			Si#	DO5
52	SUES803	150	70		1.0k	8.3m	175J	Si	DO5
53	VHE803	150	70	100	1.0k	16m	175J	Si	E203b
54	S3615	150	70	138C	1.2k	8.3m	190J	Si△	S488bØ
55	1N1398	150	70	150C	1.2k		190J	Si	S14b
56	1N3141	150	70	150C	1.2k		150C	Si	S206
57	2SM70	160	70		1.2k			Si	S515
58▼	S70-200	200	70		1.2k		175J	Si	u5h
59▼	SR7002	200	70					Si	D05
60	SUES804	200	70		1.0k	8.3m	175J	Si	DO5
61	ST11-20	200	70	90C	800		190J	Si	S187dØ
62	1N4136	200	70	100C	750 §		175C	Si	DO5
63	A77B	200	70	100C	750		150J	Si	DO5
64	BYX34-200	200	70	100B	1.0k	10m	150J	Si	S12cØ
65	PH70-200	200	70	100A	1.0k	10m	150J	Si	DO5Ø
66	SW02PCN040	200	70	100C	650 §	10m	175J	Si	DO5Ø
67	VHE804	200	70	100	1.0k	16m	175J	Si	E203b
68	A72B	200	70	120C	1.0k		150J	Si	DO5
69	M71-200	200	70	120C	1.0k§	10m	150S	Si	S438Ø
70	M71-200R	200	70	120A	1.0k		150J	Si	DO5
71	R4040270	200	70	125C	1.2k		200C	Si	DO5Ø
72	S306020F	200	70	125C	1.2k		190J	Si	DO5Ø
73	F6C3	200	70	138C	1.2k		190C	Si	DO5
74	S3620	200	70	138C	1.2k	8.3m	190J	Si△	S488bØ
75	70HFR20	200	70	140C	1.2k		140C	Si	DO5
76	R4140270	200	70	140C	1.2k	5.0m	190J	△	DO5
77▼	SD070N02P	200	70	140C	1.1k	10m	180J	Si	DO5
78▼	SD070R02P	200	70	140C	1.1k	10m	180J	Si	DO5
79▼	SD071N02P	200	70	140C	1.1k	10m	180J	Si	S481
80▼	SD071R02P	200	70	140C	1.1k	10m	180J	Si	S481
81	1N1399	200	70	150C	1.2k		190J	Si	S14b
82	1N3142	200	70	150C	1.2k		150C	Si	S206
83	J4C3	200	70	150C	4.0k		175J	Si	DO9
84	S2GN72	200	70	200B	700	10m	250J	Si△	S322Ø
85	F6D3	250	70	138C	1.2k		190C	Si	DO5
86	S3625	250	70	138C	1.2k	8.3m	190J	Si△	S488bØ
87	J4D3	250	70	150C	4.0k		175J	Si	DO9
88	SUES805	300	70		1.0k	8.3m	175J	Si	DO5
89	ST11-30	300	70	90C	800		190J	Si	S187dØ
90	BYX34-300	300	70	100B	1.0k	10m	150J	Si	S12cØ
91	R4040370	300	70	125C	1.2k		200C	Si	DO5Ø
92	F6E3	300	70	138C	1.2k		190C	Si	DO5
93	S3630	300	70	138C	1.2k	8.3m	190J	Si△	S488bØ
94	70HFR30	300	70	140C	1.2k		140C	Si	DO5
95	R4140370	300	70	140C	1.2k	5.0m	190J	△	DO5
96	1N1400	300	70	150C	1.2k		190J	Si	S14b
97	J4E3	300	70	150C	4.0k		175J	Si	DO9
98	S3GN72	300	70	200B	700	10m	250J	Si△	S322Ø
99	4SM70	320	70		1.2k			Si	S515
100	F6F3	350	70	138C	1.2k		190C	Si	DO5
101	S3635	350	70	138C	1.2k	8.3m	190J	Si△	S488bØ
102	J4F3	350	70	150C	4.0k		175J	Si	DO9
103▼	S70-400	400	70		1.2k		175J	Si	u5h
104▼	SR7004	400	70					Si	D05
105	SUES806	400	70		1.0k	8.3m	175J	Si	DO5
106	IRKD71-04	400	70	25J	1.7k		150J	Si	M1188a*
107	IRKE71-04	400	70	25J	1.7k		150J	Si	M1188b
108	KGB0521SX	400	70	45A	600	10m		Si	M1087
109	ST11-40	400	70	90C	800		190J	Si	S187dØ
110	1N4137	400	70	100C	750 §		175C	Si	DO5
111	A77D	400	70	100C	750		150J	Si	DO5
112	BYX34-400	400	70	100B	1.0k	10m	150J	Si	S12cØ
113	SW04PCN040	400	70	100C	650 §	10m	175J	Si	DO5Ø
114	A72D	400	70	120C	1.0k		150J	Si	DO5
115	M71-400	400	70	120C	1.0k§	10m	150S	Si	S438Ø
116	M71-400R	400	70	120A	1.0k		150J	Si	DO5
117	R4040470	400	70	125C	1.2k		200C	Si	DO5Ø
118	S306040F	400	70	125C	1.2k		190J	Si	D05Ø
119	F6G3	400	70	138C	1.2k		190C	Si	DO5
120	S3640	400	70	138C	1.2k	8.3m	190J	Si△	S488bØ
121	70HFR40	400	70	140C	1.2k		140C	Si	DO5
122	R4140470	400	70	140C	1.2k	5.0m	190J	△	DO5
123▼	SD070N04P	400	70	140C	1.1k	10m	180J	Si	DO5
124▼	SD070R04P	400	70	140C	1.1k	10m	180J	Si	DO5
125▼	SD071N04P	400	70	140C	1.1k	10m	180J	Si	S481
126▼	SD071R04P	400	70	140C	1.1k	10m	180J	Si	S481
127	1N1401	400	70	150C	1.2k		190J	Si	S14b
128	J4G3	400	70	150C	4.0k		175J	Si	DO9
129	S4GN72	400	70	200B	700	10m	250J	Si△	S322Ø
130	S3645	450	70	138C	1.2k	8.3m	190J	Si△	S488bØ
131	6SM70	480	70		1.2k			Si	S515
132	ST11-50	500	70	90C	800		190J	Si	S187dØ
133	BYX34-500	500	70	100B	1.0k	10m	150J	Si	S12cØ
134	R4040570	500	70	125C	1.2k		200C	Si	DO5Ø
135	F6H3	500	70	138C	1.2k		190C	Si	DO5
136	S3650	500	70	138C	1.2k	8.3m	190J	Si△	S488bØ
137	70HFR50	500	70	140C	1.2k		140C	Si	DO5
138	R4140570	500	70	140C	1.2k	5.0m	190J	△	DO5
139	1N1402	500	70	150C	1.2k		190J	Si	S14b
140	J4H3	500	70	150C	4.0k		175J	Si	DO9
141	S5GN72	500	70	200B	700	10m	250J	Si△	S322Ø
142▼	S70-600	600	70		1.2k		175J	Si	u5h
143▼	SR7006	600	70					Si	D05
144	IRKD71-06	600	70	25J	1.7k		150J	Si	M1188a*
145	IRKE71-06	600	70	25J	1.7k		150J	Si	M1188b
146	ST11-60	600	70	90C	800		190J	Si	S187dØ
147	1N4138	600	70	100C	750 §		175C	Si	DO5
148	A77M	600	70	100C	750		150J	Si	DO5
149	PH70-600	600	70	100A	1.0k	10m	150J	Si	DO5Ø
150	SW06PCN040	600	70	100C	650 §	10m	175J	Si	DO5Ø
151	A72M	600	70	120C	1.0k		150J	Si	DO5
152	M71-600	600	70	120C	1.0k§	10m	150S	Si	S438Ø
153	M71-600R	600	70	120A	1.0k		150J	Si	DO5
154	MZ71-600	600	70	120C	1.0k		150J	Si	DO5
155	MZ71-600R	600	70	120C	1.0k		150J	Si	DO5
156	R4040670	600	70	125C	1.2k		200C	Si	DO5Ø
157	S306060F	600	70	125C	1.2k		190J	Si	D05Ø
158	F6K3	600	70	138C	1.2k		190C	Si	DO5
159	S3660	600	70	138C	1.2k	8.3m	190J	Si△	S488bØ
160	70HFR60	600	70	140C	1.2k		140C	Si	DO5
161	R4140670	600	70	140C	1.2k	5.0m	190J	△	DO5
162▼	SD070N06P	600	70	140C	1.1k	10m	180J	Si	DO5
163▼	SD070R06P	600	70	140C	1.1k	10m	180J	Si	DO5
164▼	SD071N06P	600	70	140C	1.1k	10m	180J	Si	S481
165▼	SD071R06P	600	70	140C	1.1k	10m	180J	Si	S481
166	1N1403	600	70	150C	1.2k		190J	Si	S14b
167	J4K3	600	70	150C	4.0k		175J	Si	DO9
168	S6GN72	600	70	200B	700	10m	250J	Si△	S322Ø
169	8SM70	640	70		1.2k			Si	S515
170	KGB0522SX	700	70	45A	600	10m		Si	M1087
171	F6M3	700	70	138C	1.2k		190C	Si	DO5
172	S3670	700	70	138C	1.2k	8.3m	190J	Si△	S488bØ
173	R4140770	700	70	140C	1.2k	5.0m	190J	△	DO5
174	J4M3	700	70	150C	4.0k		175J	Si	DO9
175	10SM70	800	70		1.2k			Si	S515
176▼	S70-800	800	70		1.2k		175J	Si	u5h
177▼	SR7008	800	70					Si	D05
178	IRKD71-08	800	70	25J	1.7k		150J	Si	M1188a*
179	IRKE71-08	800	70	25J	1.7k		150J	Si	M1188b
180	ST11-80	800	70	90C	800		190J	Si	S187dØ
181	A77N	800	70	100C	750		150J	Si	DO5
182	SW08PCN040	800	70	100C	650 §	10m	175J	Si	DO5Ø
183	A72N	800	70	120C	1.0k		150J	Si	DO5
184	M71-800	800	70	120C	1.0k§	10m	150S	Si	S438Ø
185	M71-800R	800	70	120A	1.0k		150J	Si	DO5
186	MZ71-800	800	70	120C	1.0k		150J	Si	DO5
187	MZ71-800R	800	70	120C	1.0k		150J	Si	DO5
188	R4040870	800	70	125C	1.2k		200C	Si	DO5Ø
189	S306080F	800	70	125C	1.2k		190J	Si	D05Ø
190	F6N3	800	70	138C	1.2k		190C	Si	DO5
191	S3680	800	70	138C	1.2k	8.3m	190J	Si△	S488bØ
192	70HF80	800	70	140B	1.0k	8.3m	200A	Si△	DO5Ø
193	70HFR80	800	70	140C	1.2k		140C	Si	DO5
194	R4140870	800	70	140C	1.2k	5.0m	190J	△	DO5
195▼	SD070N08P	800	70	140C	1.1k	10m	180J	Si	DO5
196▼	SD070R08P	800	70	140C	1.1k	10m	180J	Si	DO5
197▼	SD071N08P	800	70	140C	1.1k	10m	180J	Si	S481
198▼	SD071R08P	800	70	140C	1.1k	10m	180J	Si	S481
199	J4N3	800	70	150C	4.0k		175J	Si	DO9
200	S3690	900	70	138C	1.2k	8.3m	190J	Si△	S488bØ
201	R4140970	900	70	140C	1.2k	5.0m	190J	△	DO5
202▼	S70-1000	1.0k	70		1.2k		175J	Si	u5h
203▼	S70-1200	1.2k	70		1.2k		175J	Si	u5h
204	5JH3	50	72		150	4.0m	100A	Si	S11fØ
205	10JH3	100	72		150	4.0m	100A	Si	S11fØ
206	20JH3	200	72		150	4.0m	100A	Si	S11fØ
207	30JH3	300	72		150	4.0m	100A	Si	S11fØ
208	40JH3	400	72		150	4.0m	100A	Si	S11fØ
209	SCAS4F	400	72	55C	750		175J	Si	M495
210	50JH3	500	72		150	4.0m	100A	Si	S11fØ
211	60JH3	600	72		150	4.0m	100A	Si	S11fØ
212	2R7S	20	75		800		175J	Si▼	DO5
213	SSH75A020V	20	75		1.0k			Si	DO21
214	USD520	20	75	115C	1.0k	8.3m	175J	♦	DO5
215	SSH75A030V	30	75		1.0k			Si	DO21
216	75HQ035	35	75	115C	955	6.0m	175J	♦	DO5
217	USD535	35	75	115C	1.0k	8.3m	175J	♦	DO5
218	SSH75A040V	40	75		1.0k			Si	DO21
219	BYS76	45	75		800	8.3m	150J	Si	S19ah
220	USD545	45	75	115C	1.0k	8.3m	175J	♦	DO5

SYMBOLS AND CODES EXPLAINED IN INTERPRETER

5. GENERAL-PURPOSE RECTIFIERS - $I_O \geq 50$ A (Cont'd)

IN ORDER OF: (1) IO MAX (2) PIV (3) ° TEMP & (4) TYPE NMBER

LINE No.	4 TYPE NUMBER	2 PIV (V)	MAX AVG FWD DC CURRENT 1 Io MAX (A)	3 @ TEMP (°C)	MAX RATING SURGE CURR PEAK 1 Cy (A)	PULSE WIDTH (s)	MAX. TEMP (°C)	MAT	DRAWING No.
1	USD545HR2	45	75	115C	1.0k	8.3m	175J	♦	DO5
2	5R7S	50	75		800		175J	Si▼	DO5
3	BYS72	50	75		1.0k	10m	175J	Si	S19ah
4	SSH75A050V	50	75		1.0k			Si	DO21
5	SDA263AF1	50	75	50C	375		150	Si	M1040
6	BYS71	60	75		1.0k	10m	175J	Si	S19ah
7	SSH75A060V	60	75		1.0k			Si	DO21
8	7R7S	70	75		800		175J	Si▼	DO5
9	1N1466	100	75				190J	Si	M56c
10	10R7S	100	75		800		175J	Si▼	DO5
11	SDA263BF1	100	75	50C	375		150	Si	M1040
12	12R7S	125	75		800		175J	Si▼	DO5
13	15R7S	150	75		800		175J	Si▼	DO5
14	1N1467	200	75				190J	Si	M56c
15	SDA263CF1	200	75	50C	375		150	Si	M1040
16	SW02PCN055	200	75	110C	900 §	10m	175J	Si	DO5Ø
17	SW02PCN075	200	75	135C	1.3k§	10m	175	Si	DO5Ø
18	1N1468	300	75				190J	Si	M56c
19	1N1469	400	75				190J	Si	M56c
20	SDA263DF1	400	75	50C	375		150	Si	M1040
21	SW04PCN055	400	75	110C	900 §	10m	175J	Si	DO5Ø
22	SW04PCN075	400	75	135C	1.3k§	10m	175	Si	DO5Ø
23	SW06PCN055	600	75	110C	900 §	10m	175J	Si	DO5Ø
24	SW06PCN075	600	75	135C	1.3k§	10m	175	Si	DO5Ø
25	SW08PCN055	800	75	110C	900 §	10m	175J	Si	DO5Ø
26	SW08PCN075	800	75	135C	1.3k§	10m	175	Si	DO5Ø
27	DD65N400	400	76	88C	1.6k	10m	150J	Si	20
28	DD65N800	800	76	88C	1.6k	10m	150J	Si	20
29	SCNAS4F	400	78	55C	750		175J	Si	M495
30	SCPAS4F	400	78	55C	750		175J	Si	M495
31	BYS92-40	40	80	112C	900		175J	Si	M1294*
32	BYS92-45	45	80	112C	900		175J	Si	M1294*
33	BYS92-50	50	80	112C	900		175J	Si	M1294*
34	800HB1U	100	80	85C	800			Si	M1275a
35	81F1FMA	100	80	106C	1.4m	10m	150J	Si△	M1142
36	81R1FMA	100	80	106C	1.4m	10m	150J	Si△	M1142
37	800HB2U	200	80	85C	800			Si	M1275a
38	81F2FMA	200	80	106C	1.4m	10m	150J	Si△	M1142
39	81R2FMA	200	80	106C	1.4m	10m	150J	Si△	M1142
40	FD80A4	200	80	124C	1.6k§	8.3m	150J	Si△	M849
41	800HB3U	300	80	85C	800			Si	M1275a
42	81F3FMA	300	80	106C	1.4m	10m	150J	Si△	M1142
43	81R3FMA	300	80	106C	1.4m	10m	150J	Si△	M1142
44	FD80A6	300	80	124C	1.6k§	8.3m	150J	Si△	M849
45	KGD1521SX	400	80	45A	600			Si	M1087
46	800HB4U	400	80	85C	800			Si	M1275a
47	SKKD81-04	400	80	87C	2.0k		125J	Si	Y240
48	SKKE81-04	400	80	87C	2.0k		125J	Si	Y240
49	FD80A8	400	80	124C	1.6k§	8.3m	150J	Si△	M849
50	FD80A10	500	80	124C	1.6k§	8.3m	150J	Si△	M849
51	800HB6U	600	80	85C	800			Si	M1275a
52	SKKD81-06	600	80	87C	2.0k		125J	Si	Y240
53	SKKE81-06	600	80	87C	2.0k		125J	Si	Y240
54	KGD1522SX	700	80	45A	600			Si	M1087
55	SKKD81-08	800	80	87C	2.0k		125J	Si	Y240
56	SKKE81-08	800	80	87C	2.0k		125J	Si	Y240
57	DFS80A8	800	80	93C	1.6k	10m	150J	Si	M567Ø
58	85HQ030	30	85	115C	1.1k	6.0m	175J	♦	DO5
59	85HQ035	35	85	115C	1.1k	6.0m	175J	♦	DO5
60	85HQ040	40	85	115C	1.1k	6.0m	175J	♦	DO5
61	85HQ045	45	85	115C	1.1k	6.0m	175J	♦	DO5
62	F7A3	50	85	132C	1.5k		190C	Si	DO5
63	S3705	50	85	132C	1.5k	8.3m	190J	Si△	S488bØ
64	85HFL10S02	100	85	75C	1.1k	10m	125J	Si	DO5
65	85HFL10S05	100	85	75C	1.1k	10m	125J	Si	DO5
66	85HFL10S10	100	85	75C	1.1k	10m	125J	Si	DO5
67	S307010F	100	85	105C	1.5k		190J	Si	DO5Ø
68	70H10A	100	85	115C	1.5k§	8.3m	200J	Si*	DO5Ø
69	F7B3	100	85	132C	1.5k		190C	Si	DO5
70	S3710	100	85	132C	1.5k	8.3m	190J	Si△	S488bØ
71	85HF10	100	85	140C	1.4k	6.0m	180J	Si	DO5
72	85HFR10	100	85	140C	1.8k		140C	Si	DO5
73	SCAS15FF	150	85	55C	750		175J	Si	M495
74	S3715	150	85	132C	1.5k	8.3m	190J	Si△	S488bØ
75	85HFL20S02	200	85	75C	1.1k	10m	125J	Si	DO5
76	85HFL20S05	200	85	75C	1.1k	10m	125J	Si	DO5
77	85HFL20S10	200	85	75C	1.1k	10m	125J	Si	DO5
78	1N6262	200	85	100	1.5k		200S	Si	DO5
79	S307020F	200	85	105C	1.5k		190J	Si	DO5Ø
80	70H20A	200	85	115C	1.5k§	8.3m	200J	Si*	DO5Ø
81	F7C3	200	85	132C	1.5k		190C	Si	DO5
82	S3720	200	85	132C	1.5k	8.3m	190J	Si△	S488bØ
83	85HF20	200	85	140C	1.4k	6.0m	180J	Si	DO5
84	85HFR20	200	85	140C	1.8k		140C	Si	DO5
85	F7D3	250	85	132C	1.5k		190C	Si	DO5
86	S3725	250	85	132C	1.5k	8.3m	190J	Si△	S488bØ
87	70H30A	300	85	115C	1.5k§	8.3m	200J	Si*	DO5Ø
88	F7E3	300	85	132C	1.5k		190C	Si	DO5
89	S3730	300	85	132C	1.5k	8.3m	190J	Si△	S488bØ
90	85HFR30	300	85	140C	1.8k		140C	Si	DO5
91	F7F3	350	85	132C	1.5k		190C	Si	DO5
92	S3735	350	85	132C	1.5k	8.3m	190J	Si△	S488bØ
93	85HFL40S02	400	85	75C	1.1k	10m	125J	Si	DO5
94	85HFL40S05	400	85	75C	1.1k	10m	125J	Si	DO5
95	85HFL40S10	400	85	75C	1.1k	10m	125J	Si	DO5
96	S307040F	400	85	105C	1.5k		190J	Si	DO5Ø
97	70H40A	400	85	115C	1.5k§	8.3m	200J	Si*	DO5Ø
98	F7G3	400	85	132C	1.5k		190C	Si	DO5
99	S3740	400	85	132C	1.5k	8.3m	190J	Si△	S488bØ
100	85HF40	400	85	140C	1.4k	6.0m	180J	Si	DO5
101	85HFR40	400	85	140C	1.8k		140C	Si	DO5
102	S3745	450	85	132C	1.5k	8.3m	190J	Si△	S488bØ
103	70H50A	500	85	125C	1.2k§	8.3m	200J	Si*	DO5Ø
104	F7H3	500	85	132C	1.5k		190C	Si	DO5
105	S3750	500	85	132C	1.5k	8.3m	190J	Si△	S488bØ
106	85HFR50	500	85	140C	1.8k		140C	Si	DO5
107	SCAS6	600	85	55C	750		175J	Si	M495
108	85HFL60S02	600	85	75C	1.1k	10m	125J	Si	DO5
109	85HFL60S05	600	85	75C	1.1k	10m	125J	Si	DO5
110	85HFL60S10	600	85	75C	1.1k	10m	125J	Si	DO5
111	S307060F	600	85	105C	1.5k		190J	Si	D05Ø
112	70H60A	600	85	115C	1.5k§	8.3m	200J	Si*	DO5Ø
113	F7K3	600	85	132C	1.5k		190C	Si	DO5
114	S3760	600	85	132C	1.5k	8.3m	190J	Si△	S488bØ
115	85HF60	600	85	140C	1.4k	6.0m	180J	Si	DO5
116	85HFR60	600	85	140C	1.8k		140C	Si	DO5
117	D60-700	700	85	96C	1.1k	10m	150J	Si	S171g%
118	F7M3	700	85	132C	1.5k		190C	Si	DO5
119	S3770	700	85	132C	1.5k	8.3m	190J	Si△	S488bØ
120	85HFL80S02	800	85	75C	1.1k	10m	125J	Si	DO5
121	85HFL80S05	800	85	75C	1.1k	10m	125J	Si	DO5
122	85HFL80S10	800	85	75C	1.1k	10m	125J	Si	DO5
123	70H80A	800	85	115C	1.5k§	8.3m	200J	Si*	DO5Ø
124	F7N3	800	85	132C	1.5k		190C	Si	DO5
125	S3780	800	85	132C	1.5k	8.3m	190J	Si△	S488bØ
126	85HF80	800	85	140C	1.4k	6.0m	180J	Si	DO5
127	85HFR80	800	85	140C	1.8k		140C	Si	DO5
128	S3790	900	85	132C	1.5k	8.3m	190J	Si△	S488bØ
129	DD85N400	400	89	96C	1.9k	10m	150J	Si	20
130	SSiF3825	400	89	119	1.0k	10m	180J	Si△	S72m△
131	SSiF3925	400	89	119	1.0k	10m	180J	Si△	S72m△
132	SSiF3840	700	89	119	1.0k	10m	180J	Si△	S72m△
133	SSiF3940	700	89	119	1.0k	10m	180J	Si△	S72m△
134	DD85N800	800	89	96C	1.9k	10m	150J	Si	20
135▼	SD090N02P	200	90	135C	1.5k	10m	180J	Si	DO5
136▼	SD090R02P	200	90	135C	1.5k	10m	180J	Si	DO5
137▼	SD091N02P	200	90	135C	1.5k	10m	180J	Si	S481
138▼	SD091R02P	200	90	135C	1.5k	10m	180J	Si	S481
139	IRKD91-04	400	90	25J	2.2k		150J	Si	M1188a*
140	IRKE91-04	400	90	25J	2.2k		150J	Si	M1188b
141▼	SD090N04P	400	90	135C	1.5k	10m	180J	Si	DO5
142▼	SD090R04P	400	90	135C	1.5k	10m	180J	Si	DO5
143▼	SD091N04P	400	90	135C	1.5k	10m	180J	Si	S481
144▼	SD091R04P	400	90	135C	1.5k	10m	180J	Si	S481
145	IRKD91-06	600	90	25J	2.2k		150J	Si	M1188a*
146	IRKE91-06	600	90	25J	2.2k		150J	Si	M1188b
147▼	SD090N06P	600	90	135C	1.5k	10m	180J	Si	DO5
148▼	SD090R06P	600	90	135C	1.5k	10m	180J	Si	DO5
149▼	SD091N06P	600	90	135C	1.5k	10m	180J	Si	S481
150▼	SD091R06P	600	90	135C	1.5k	10m	180J	Si	S481
151	IRKD91-08	800	90	25J	2.2k		150J	Si	M1188a*
152	IRKE91-08	800	90	25J	2.2k		150J	Si	M1188b
153▼	SD090N08P	800	90	135C	1.5k	10m	180J	Si	DO5
154▼	SD090R08P	800	90	135C	1.5k	10m	180J	Si	DO5
155▼	SD091N08P	800	90	135C	1.5k	10m	180J	Si	S481
156▼	SD091R08P	800	90	135C	1.5k	10m	180J	Si	S481
157	SCNAS15FF	150	92	55C	750		175J	Si	M495
158	SCPAS15FF	150	92	55C	750		175J	Si	M495
159	DS75-02B	200	92	115C	1.4k§	10m	180J	Si	S465eØ
160	SKD60/04	400	92	85C	1.0k	10m	125J	Si	C255
161	DS75-04B	400	92	115C	1.4k§	10m	180J	Si	S465eØ
162	SKD60/08	800	92	85C	1.0k	10m	125J	Si	C255
163	SKN70/02	200	95	100C	1.0k	10m	180J	Si	S481
164	SKN71/02	200	95	100C	1.0k	10m	180J	Si	DO5
165	SKR70/02	200	95	100C	1.0k	10m	180J	Si	DO5
166	SKR71/02	200	95	100C	1.0k	10m	180J	Si	DO5
167	SKN70/04	400	95	100C	1.0k	10m	180J	Si	S481
168	SKN71/04	400	95	100C	1.0k	10m	180J	Si	DO5
169	SKR70/04	400	95	100C	1.0k	10m	180J	Si	DO5
170	SKR71/04	400	95	100C	1.0k	10m	180J	Si	DO5
171	SKN70/08	800	95	100C	1.0k	10m	180J	Si	S481
172	SKN71/08	800	95	100C	1.0k	10m	180J	Si	DO5
173	SKR70/08	800	95	100C	1.0k	10m	180J	Si	DO5
174	SKR71/08	800	95	100C	1.0k	10m	180J	Si	DO5
175▼	D121NR400B	400	98	130C	2.7k§	10m	180J	Si	S532a
176▼	D121NR400V	400	98	130C	2.7k§	10m	180J	Si	S532a
177▼	D121NR800B	800	98	130C	2.7k§	10m	180J	Si	S532a
178▼	D121NR800V	800	98	130C	2.7k§	10m	180J	Si	S532a

$I_O \geq 100$ A

LINE No.	TYPE NUMBER	PIV (V)	Io MAX (A)	TEMP (°C)	PEAK 1 Cy (A)	PULSE WIDTH (s)	MAX. TEMP (°C)	MAT	DRAWING No.
182	GU1A100SB	28	100		1.8k		110	Ge	DO8
183	BYS97-40	40	100	135C	1.8k		175J	Si	M1220*
184	BYS97-45	45	100	135C	1.8k		175J	Si	M1220*
185	1N2426	50	100	75C	950		175B	Si△	DO8
186	BYS97-50	50	100	135C	1.8k		175J	Si	M1220*
187	GU1A100	56	100	25C	1.8k		110J	Ge	DO8
188	1SM100	80	100		3.0k			Si	M986
189	1N1470	100	100				190J	Si	M56f
190	ST6-10	100	100	25A	1.6k		190J	Si	Z29
191	S100-01	100	100	50A	2.6k	10m	150J	Si	S491
192	1N2427	100	100	75C	950		175B	Si△	DO8
193	1000HB1U	100	100	85C	1.0k			Si	M1275a
194	101F1FM	100	100	95	1.6k		150J	Si△	M228bØ
195	1000HT1U	100	100	100C	800			Si	M1275
196	A177A	100	100	100C	2.5k	8.3m	175J	Si△	S120j
197	1N4878	100	100	120C	1.5k		150C	Si	DO8
198	1N3288	100	100	130C	1.6k	8.3m	200C	Si	DO8
199	1N3288A	100	100	130C	2.3k		200C	Si	DO8
200	A170A	100	100	130C	2.5k	8.3m	200J	Si△	S120jØ
201	R5D00110WC	100	100	130C	2.3k	8.3m	200J	Si	DO30Ø
202	1N2428	150	100	75C	950		175B	Si△	DO8
203	2SM100	160	100		3.0k			Si	M986
204	1N1471	200	100				190J	Si	M56f
205	ST6-20	200	100	25A	1.6k		190J	Si	Z29
206	S100-02	200	100	50A	2.6k	10m	150J	Si	S491
207	1N2429	200	100	75C	950		175B	Si△	DO8
208	ES481A	200	100	75B	1.0k	8.3m	125J	Si	M1331a
209	ES482A	200	100	75B	1.0k	8.3m	125J	Si	M1331b
210	ES483A	200	100	75B	1.0k	8.3m	125J	Si	M1331c
211	ES484A	200	100	75B	1.0k	8.3m	125J	Si	M1331d
212♦	ES485A	200	100	75B	2.0k	8.3m	175J	Si	M1131e
213♦	ES581A	200	100	75B	2.0k	8.3m	175J	Si	M1131a
214♦	ES582A	200	100	75B	2.0k	8.3m	175J	Si	M1131b
215♦	ES583A	200	100	75B	2.0k	8.3m	175J	Si	M1131c
216	ES584A	200	100	75B	2.0k	8.3m	175J	Si	M1131d
217	ES585A	200	100	75B	2.0k	8.3m	175J	Si	M1131e
218	T482A	200	100	75B	800	8.3m	125A	Si	M1332b
219	1000HB2U	200	100	85C	1.0k			Si	M1275a
220	101F2FM	200	100	95	1.6k		150J	Si△	M228bØ

SYMBOLS AND CODES EXPLAINED IN INTERPRETER

5. GENERAL-PURPOSE RECTIFIERS - $I_O \geq 100$ A (Cont'd)

IN ORDER OF: (1) IO MAX (2) PIV
(3) ° TEMP & (4) TYPE NMBER

LINE No.	4 TYPE NUMBER	2 PIV (V)	MAX AVG FWD DC CURRENT 1 Io MAX (A)	3 @ TEMP (°C)	MAX RATING SURGE CURR PEAK 1 Cy (A)	PULSE WIDTH (s)	MAX. TEMP (°C)	MAT	DRAWING No.
1	1000HT2U	200	100	100C	800			Si	M1275
2	A177B	200	100	100C	2.5k	8.3m	175J	Si△	S120j
3	KU1002	200	100	100C	1.8k	10m	150J	Si	S421
4	KU1502	200	100	100C	2.5k	10m	150J	Si	S421
5	1N3289	200	100	130C	1.6k	8.3m	200C	Si	DO8
6	1N3289A	200	100	130C	2.3k		200C	Si	DO8
7	A170B	200	100	130C	2.5k	8.3m	200J	Si△	S120j⊠
8	R5D00210WC	200	100	130C	2.3k	8.3m	200J	Si	DO30⊠
9	DRB100-02R	200	100	150J	1.8k	10m	150J	Si#	C264
10	DRBT100-02R	200	100	150J	1.8k	10m	150J	Si#	C265
11	1N2430	250	100	75C	950		175B	Si△	DO8
12	1N1472	300	100				190J	Si	M56f
13	ST6-30	300	100	25A	1.6k		190J	Si	Z29
14	1N2431	300	100	75C	950		175B	Si△	DO8
15	1000HB3U	300	100	85C	1.0k			Si	M1275a
16	L08C	300 %	100	90C	2.0k	10m	150J	Si	S518
17	101F3FM	300	100	95	1.6k		150J	Si△	M228b⊠
18	1000HT3U	300	100	100C	800			Si	M1275
19	A177C	300	100	100C	2.5k	8.3m	175J	Si△	S120j
20	L07C	300 %	100	104	2.0k	10m	125J	Si	S518
21	1N3290	300	100	130C	1.6k	8.3m	200C	Si	DO8
22	1N3290A	300	100	130C	2.3k		200C	Si	DO8
23	A170C	300	100	130C	2.5k	8.3m	200J	Si△	S120j⊠
24	R5D00310WC	300	100	130C	2.3k	8.3m	200J	Si	DO30⊠
25	MR1215SL	300	100	135C	2.0k§	8.3m	190J	Si△	S87a
26	MR1815SL	300	100	135C	2.0k§	8.3m	190J	Si△	S87f
27	4SM100	320	100		3.0k			Si	M986
28	1N2432	350	100	75C	950		175B	Si△	DO8
29	1N1473	400	100				190J	Si	M56f
30	ST6-40	400	100	25A	1.6k		190J	Si	Z29
31	S100-04	400	100	50A	2.6k	10m	150J	Si	S491
32	101KL40S10	400	100	60C	3.0k		125J	Si△	DO8
33	101KLR40S10	400	100	70	3.0k		125J	Si△	DO8
34	1N2433	400	100	75C	950		175B	Si△	DO8
35	ES481B	400	100	75B	1.0k	8.3m	125J	Si	M1331a
36	ES482B	400	100	75B	1.0k	8.3m	125J	Si	M1331b
37	ES483B	400	100	75B	1.0k	8.3m	125J	Si	M1331c
38	ES484B	400	100	75B	1.0k	8.3m	125J	Si	M1331d
39♦	ES485B	400	100	75B	2.0k	8.3m	175J	Si	M1131e
40♦	ES581B	400	100	75B	2.0k	8.3m	175J	Si	M1131a
41♦	ES582B	400	100	75B	2.0k	8.3m	175J	Si	M1131b
42♦	ES583B	400	100	75B	2.0k	8.3m	175J	Si	M1131c
43	ES584B	400	100	75B	2.0k	8.3m	175J	Si	M1131d
44	ES585B	400	100	75B	2.0k	8.3m	175J	Si	M1131e
45	T482B	400	100	75B	800	8.3m	125A	Si	M1332b
46	1000HB4U	400	100	85C	1.0k			Si	M1275a
47	RM100DZ-M	400	100	90C	2.0k§	8.3m	125J	Si	M1188
48	1000HT4U	400	100	100C	800			Si	M1275
49	A177D	400	100	100C	2.5k	8.3m	175J	Si△	S120j
50♦	D75N400B	400	100	100C	1.6k§	10m	150J	Si	S567a
51▼	D75N400C	400	100	100C	1.6k§	10m	150J	Si	S571
52▼	D75N400U	400	100	100C	1.6k§	10m	150J	Si	S571
53▼	D75NR400B	400	100	100C	1.6k§	10m	150J	Si	S567a
54▼	D75NR400C	400	100	100C	1.6k§	10m	150J	Si	S571
55▼	D75NR400U	400	100	100C	1.6k§	10m	150J	Si	S571
56	KU1004	400	100	100C	1.8k	10m	150J	Si	S421
57	KU1504	400	100	100C	2.5k	10m	150J	Si	S421
58	SKN2M100/04	400	100	100C	1.5k	10m	150J	Si	DO30
59	SKR2M100/04	400	100	100C	1.5k	10m	150J	Si	DO30
60	101F4S	400	100	105C	1.6k	10m	175J	Si	S503⊠
61	101KLR40S15	400	100	120	3.0k		175J	Si△	DO8
62	101KLR40S20	400	100	120	3.0k		175J	Si△	DO8
63	101KLR40S25	400	100	120	3.0k		175J	Si△	DO8
64	101KLR40S30	400	100	120	3.0k		175J	Si△	DO8
65	SKR100/04	400	100	125C	1.5k	10m	180A	Si	S171m
66	1N3291	400	100	130C	1.6k	8.3m	200C	Si	DO8
67	1N3291A	400	100	130C	2.3k		200C	Si	DO8
68	1N3291R	400	100	130B	1.6k		200A	Si	DO8
69	A170D	400	100	130C	2.5k	8.3m	200J	Si△	S120j⊠
70	R5D00410WC	400	100	130C	2.3k	8.3m	200J	Si	DO30⊠
71	DRB100-04R	400	100	150J	1.8k	10m	150J	Si#	C264
72	DRBT100-04R	400	100	150J	1.8k	10m	150J	Si#	C265
73	6SM100	480	100		3.0k			Si	M986
74	ST6-50	500	100	25A	1.6k		190J	Si	Z29
75	1N2434	500	100	75C	950		175B	Si△	DO8
76	L08E	500 %	100	90C	2.0k	10m	150J	Si	S518
77	A177E	500	100	100C	2.5k	8.3m	175J	Si△	S120j
78	L07E	500 %	100	104	2.0k	10m	125J	Si	S518
79	101F5S	500	100	105C	1.6k	10m	175J	Si	S503⊠
80	SR100AM10	500	100	110C	3.0k	8.3m	150J	Si	S435b
81	1N3292	500	100	130C	1.6k	8.3m	200C	Si	DO8
82	1N3292A	500	100	130C	1.6k	8.3m	200C	Si	DO8⊠
83	1N3292B	500	100	130C	2.3k		200C	Si	DO8
84	A170E	500	100	130C	2.5k	8.3m	200J	Si△	S120j⊠
85	R5D00510WC	500	100	130C	2.3k	8.3m	200J	Si	DO30⊠
86	R5020610RSWA	600	100		2.2k	5.0m	150J	Si	DO8⊠
87	ST6-60	600	100	25A	1.6k		190J	Si	Z29
88	S100-06	600	100	50A	2.6k	10m	150J	Si	S491
89	101KL60S10	600	100	60C	3.0k		125J	Si△	DO8
90	101KLR60S10	600	100	70	3.0k		125J	Si△	DO8
91	1N2435	600	100	75C	950		175B	Si△	DO8
92	ES481C	600	100	75B	1.0k	8.3m	125J	Si	M1331a
93	ES482C	600	100	75B	1.0k	8.3m	125J	Si	M1331b
94	ES483C	600	100	75B	1.0k	8.3m	125J	Si	M1331c
95	ES484C	600	100	75B	1.0k	8.3m	125J	Si	M1331d
96♦	ES485C	600	100	75B	2.0k	8.3m	175J	Si	M1131e
97♦	ES581C	600	100	75B	2.0k	8.3m	175J	Si	M1131a
98♦	ES582C	600	100	75B	2.0k	8.3m	175J	Si	M1131b
99♦	ES583C	600	100	75B	2.0k	8.3m	175J	Si	M1131c
100	ES584C	600	100	75B	2.0k	8.3m	175J	Si	M1131d
101	ES585C	600	100	75B	2.0k	8.3m	175J	Si	M1131e
102	T482C	600	100	75B	800	8.3m	125A	Si	M1332b
103	1000HB6U	600	100	85C	1.0k			Si	M1275a
104	1000HT6U	600	100	100C	800			Si	M1275
105	A177M	600	100	100C	2.5k	8.3m	175J	Si△	S120j
106	KU1006	600	100	100C	1.8k	10m	150J	Si	S421
107	KU1506	600	100	100C	2.5k	10m	150J	Si	S421
108	SKN2M100/06	600	100	100C	1.5k	10m	150J	Si	DO30
109	SKR2M100/06	600	100	100C	1.5k	10m	150J	Si	DO30
110	101F6S	600	100	105C	1.6k	10m	175J	Si	S503⊠
111	DS75-06B	600	100	105C	1.4k	10m	180J	Si	
112	SR100AM12	600	100	110C	3.0k	8.3m	150J	Si	S435b
113	101KLR60S15	600	100	120	3.0k		175J	Si△	DO8
114	101KLR60S20	600	100	120	3.0k		175J	Si△	DO8
115	101KLR60S25	600	100	120	3.0k		175J	Si△	DO8
116	101KLR60S30	600	100	120	3.0k		175J	Si△	DO8
117	1N3293	600	100	130C	1.6k	8.3m	200C	Si	DO8
118	1N3293A	600	100	130C	2.3k		200C	Si	DO8
119	1N3293R	600	100	130B	1.6k		200A	Si	DO8
120	A170M	600	100	130C	2.5k	8.3m	200J	Si△	S120j⊠
121	R5D00610WC	600	100	130C	2.3k	8.3m	200J	Si	DO30⊠
122	MR1219SL	600	100	135C	2.0k§	8.3m	190J	Si△	S87a
123	MR1819SL	600	100	135C	2.0k§	8.3m	190J	Si△	S87f
124	DRB100-06R	600	100	150J	1.8k	10m	150J	Si#	C264
125	DRBT100-06R	600	100	150J	1.8k	10m	150J	Si#	C265
126	8SM100	640	100		3.0k			Si	M986
127	R5020710RSWA	700	100		2.2k	5.0m	150J	Si	DO8⊠
128	A177S	700	100	100C	2.5k	8.3m	175J	Si△	S120j
129	A170S	700	100	130C	2.5k	8.3m	200J	Si△	S120j⊠
130	R5D00710WC	700	100	130C	2.3k	8.3m	200J	Si	DO30⊠
131	10SM100	800	100		3.0k			Si	M986
132	R5020810RSWA	800	100		2.2k	5.0m	150J	Si	DO8⊠
133	S100-08	800	100	50A	2.6k	10m	150J	Si	S491
134	101KL80S10	800	100	60C	3.0k		125J	Si△	DO8
135	101KLR80S10	800	100	70	3.0k		125J	Si△	DO8
136	ES481D	800	100	75B	1.0k	8.3m	125J	Si	M1331a
137	ES482D	800	100	75B	1.0k	8.3m	125J	Si	M1331b
138	ES483D	800	100	75B	1.0k	8.3m	125J	Si	M1331c
139	ES484D	800	100	75B	1.0k	8.3m	125J	Si	M1331d
140♦	ES485D	800	100	75B	2.0k	8.3m	175J	Si	M1131e
141♦	ES581D	800	100	75B	2.0k	8.3m	175J	Si	M1131a
142♦	ES582D	800	100	75B	2.0k	8.3m	175J	Si	M1131b
143	ES583D	800	100	75B	2.0k	8.3m	175J	Si	M1131c
144	ES584D	800	100	75B	2.0k	8.3m	175J	Si	M1131d
145	ES585D	800	100	75B	2.0k	8.3m	175J	Si	M1131e
146	T482D	800	100	75B	800	8.3m	125A	Si	M1332b
147	DSS100A8	800	100	90C	2.0k	10m	150J	Si	S567
148	L08G	800 %	100	90C	2.0k	10m	150J	Si	S518
149	RM100DZ-H	800	100	90C	2.0k§	8.3m	125J	Si	M1188
150	1000HT8U	800	100	100C	800			Si	M1275
151	A177N	800	100	100C	2.5k	8.3m	175J	Si△	S120j
152▼	D75N800B	800	100	100C	1.6k§	10m	150J	Si	S567a
153▼	D75N800C	800	100	100C	1.6k§	10m	150J	Si	S571
154▼	D75N800U	800	100	100C	1.6k§	10m	150J	Si	S571
155▼	D75NR800B	800	100	100C	1.6k§	10m	150J	Si	S567a
156▼	D75NR800C	800	100	100C	1.6k§	10m	150J	Si	S571
157▼	D75NR800U	800	100	100C	1.6k§	10m	150J	Si	S571
158	KU1008	800	100	100C	1.8k	10m	150J	Si	S421
159	KU1508	800	100	100C	2.5k	10m	150J	Si	S421
160	SKN2M100/08	800	100	100C	1.5k	10m	150J	Si	DO30
161	SKR2M100/08	800	100	100C	1.5k	10m	150J	Si	DO30
162	L07G	800 %	100	104	2.0k	10m	125J	Si	S518
163	101F8S	800	100	105C	1.6k	10m	175J	Si	S503⊠
164	DS75-08B	800	100	105C	1.4k	10m	180J	Si	
165	SR100AM16	800	100	110C	3.0k	8.3m	150J	Si	S435b
166	101KLR80S15	800	100	120	3.0k		175J	Si△	DO8
167	101KLR80S20	800	100	120	3.0k		175J	Si△	DO8
168	101KLR80S25	800	100	120	3.0k		175J	Si△	DO8
169	101KLR80S30	800	100	120	3.0k		175J	Si△	DO8
170	SKR100/08	800	100	125C	1.5k	10m	180A	Si	S171m
171	1N3294	800	100	130C	1.6k	8.3m	200C	Si	DO8
172	1N3294A	800	100	130C	2.3k		200C	Si	DO8
173	1N3294R	800	100	130B	1.6k		200A	Si	DO8
174	A170N	800	100	130C	2.5k	8.3m	200J	Si△	S120j⊠
175	R5D00810WC	800	100	130C	2.3k	8.3m	200J	Si	DO30⊠
176	DRB100-08R	800	100	150J	1.8k	10m	150J	Si#	C264
177	DRBT100-08R	800	100	150J	1.8k	10m	150J	Si#	C265
178	R5020910RSWA	900	100		2.2k	5.0m	150J	Si	DO8⊠
179	A177T	900	100	100C	2.5k	8.3m	175J	Si△	S120j
180	A170T	900	100	130C	2.5k	8.3m	200J	Si△	S120j⊠
181	R5D00910WC	900	100	130C	2.3k	8.3m	200J	Si	DO30⊠
182	1N3972	200	104	120C	1.5k		150A	Si△	DO8△#
183	1N3973	400	104	120C	1.5k		150A	Si△	DO8△#
184	1N3974	600	104	120C	1.5k		50A	Si△	DO8△#
185	1N3975	800	104	120C	1.5k		150A	Si△	DO8△#
186	SC3AS4F	400	105	55C	750		175J	Si	M1272
187	SSiG3825	400	109	118	1.1k	10m	180	Si△	S72m△
188	SSiG3925	400	109	118	1.1k	10m	180	Si△	S72m△
189	SSiG3840	700	109	118	1.1k	10m	180	Si△	S72m△
190	SSiG3940	700	109	118	1.1k	10m	180	Si△	S72m△
191	DS80-04A	400	110	45A	2.1k§	10m	180J	Si	S408e⊠
192	DS80-08A	800	110	110C	2.1k	10m	180J	Si	
193	1N1660	50	116	120C	3.0k		175J	Si	S14d
194	1N1661	100	116	120C	3.0k		175J	Si	S14d
195	1N1662	150	116	120C	3.0k		175J	Si	S14d
196	1N1663	200	116	120C	3.0k		175J	Si	S14d
197	1N1664	300	116	120C	3.0k		175J	Si	S14d
198	SKD100/04	400	116	85C	1.1k	10m	125J	Si	C255
199	1N1665	400	116	120C	3.0k		175J	Si	S14d
200	1N1666	500	116	120C	3.0k		175J	Si	S14d
201	SKD100/08	800	116	85C	1.1k	10m	125J	Si	C255
202▼	D121N400B	400	120	100C	3.0k§	10m	180J	Si	S532a
203▼	D121N400V	400	120	100C	3.0k§	10m	180J	Si	S532a
204▼	D121N800B	800	120	100C	3.0k§	10m	180J	Si	S532a
205▼	D121N800V	800	120	100C	3.0k§	10m	180J	Si	S532a
206	S4205	50	125	130C	1.8k	8.3m	190J	Si△	DO8⊠
207	S4205TS	50	125	130C	1.8k	8.3m	190J	Si△	S464
208	S4210	100	125	130C	1.8k	8.3m	190J	Si△	DO8⊠
209	S4210TS	100	125	130C	1.8k	8.3m	190J	Si△	S464
210	S4215	150	125	130C	1.8k	8.3m	190J	Si△	DO8⊠
211	S4215TS	150	125	130C	1.8k	8.3m	190J	Si△	S464
212	SKN100/02	200	125	100C	1.5k	10m	180J	Si	DO8
213	SKR100/02	200	125	100C	1.5k	10m	180J	Si	DO30
214	S4220	200	125	130C	1.8k	8.3m	190J	Si△	DO8⊠
215	S4220TS	200	125	130C	1.8k	8.3m	190J	Si△	S464
216	S4225	250	125	130C	1.8k	8.3m	190J	Si△	DO8⊠
217	S4225TS	250	125	130C	1.8k	8.3m	190J	Si△	S464
218	S4230	300	125	130C	1.8k	8.3m	190J	Si△	DO8⊠
219	S4230TS	300	125	130C	1.8k	8.3m	190J	Si△	S464
220	S4235	350	125	130C	1.8k	8.3m	190J	Si△	DO8⊠

SYMBOLS AND CODES EXPLAINED IN INTERPRETER

5. GENERAL-PURPOSE RECTIFIERS - $I_0 \geq 100$ A (Cont'd)

IN ORDER OF: (1) IO MAX (2) PIV (3) ° TEMP & (4) TYPE NMBER

LINE No.	4 TYPE NUMBER	2 PIV (V)	MAX AVG FWD DC CURRENT 1 Io MAX (A)	3 @ TEMP (°C)	MAX RATING SURGE CURR PEAK 1 Cy (A)	PULSE WIDTH (s)	MAX. TEMP (°C)	MAT	DRAWING No.
1	S4235TS	350	125	130C	1.8k	8.3m	190J	Si△	S464
2	KGB0611SX	400	125	45A	1.8k	10m		Si	M1088
3	SKN100/04	400	125	100C	1.5k	10m	180J	Si	DO8
4	S4240	400	125	130C	1.8k	8.3m	190J	Si△	DO8Ø
5	S4240TS	400	125	130C	1.8k	8.3m	190J	Si△	S464
6	S4245	450	125	130C	1.8k	8.3m	190J	Si△	DO8Ø
7	S4245TS	450	125	130C	1.8k	8.3m	190J	Si△	S464
8	S4250	500	125	130C	1.8k	8.3m	190J	Si△	DO8Ø
9	S4250TS	500	125	130C	1.8k	8.3m	190J	Si△	S464
10	SC3AS6	600	125	55C	750		175J	Si	M1272
11	S4260	600	125	130C	1.8k	8.3m	190J	Si△	DO8Ø
12	S4260TS	600	125	130C	1.8k	8.3m	190J	Si△	S464
13	KGB0612SX	700	125	45A	1.8k	10m		Si	M1088
14	S4270	700	125	130C	1.8k	8.3m	190J	Si△	DO8Ø
15	S4270TS	700	125	130C	1.8k	8.3m	190J	Si△	S464
16	SKN100/08	800	125	100C	1.5k	10m	180J	Si	DO8
17	S4280	800	125	130C	1.8k	8.3m	190J	Si△	DO8Ø
18	S4280TS	800	125	130C	1.8k	8.3m	190J	Si△	S464
19	S4290	900	125	130C	1.8k	8.3m	190J	Si△	DO8Ø
20	S4290TS	900	125	130C	1.8k	8.3m	190J	Si△	S464
21	SR130L-2R	100	130	106C	2.0k§	8.3m	150J	Si§	M1110
22	SR130L-2S	100	130	106B	2.0k§	8.3m	150J	Si△	M1110
23	KU1302	200	130	100C	2.3k	10m	150J	Si	S421
24	SR130L-4R	200	130	106C	2.0k§	8.3m	150J	Si§	M1110
25	SR130L-4S	200	130	106B	2.0k§	8.3m	150J	Si△	M1110
26	SR130L-6R	300	130	106C	2.0k§	8.3m	150J	Si§	M1110
27	SR130L-6S	300	130	106B	2.0k§	8.3m	150J	Si△	M1110
28	SC3HAS4FN	400	130	55C	480		175J	Si	M1272
29	SC3HAS4FP	400	130	55C	480		175J	Si	M1272
30	KU1304	400	130	100C	2.3k	10m	150J	Si	S421
31	SR130L-8R	400	130	106C	2.0k§	8.3m	150J	Si§	M1110
32	SR130L-8S	400	130	106B	2.0k§	8.3m	150J	Si△	M1110
33	SR130L-10R	500	130	106C	2.0k§	8.3m	150J	Si§	M1110
34	SR130L-10S	500	130	106B	2.0k§	8.3m	150J	Si△	M1110
35	KU1306	600	130	100C	2.3k	10m	150J	Si	S421
36	KU1308	800	130	100C	2.3k	10m	150J	Si	S421
37	BYS93-40	40	150	100C	1.8k		175J	Si	M1220*
38	BYS93-45	45	150	100C	1.8k		175J	Si	M1220*
39	1N2436	50	150	75C	1.2k		175B	Si△	DO8
40	BYS93-50	50	150	100C	1.8k		175J	Si	M1220*
41	G6A3	50	150	125C	2.1k	8.3m	190C	Si	DO8
42	S4305	50	150	125C	2.1k	8.3m	190J	Si△	DO8Ø
43	S4305TS	50	150	125C	2.1k	8.3m	190J	Si△	S464
44	1N3111	50	150	150C	3.0k§	8.3m	200C	Si	DO30
45	150K5A	50	150	150C	2.8k	6.0m	200J	Si	DO8
46	150KS5	50	150	150C	2.8k	6.0m	200J	Si	S550
47	150L5A	50	150	150C	2.8k	6.0m	200J	Si	DO30
48	152K5A	50	150	150C	2.8k	6.0m	200J	Si	S548
49	152L5A	50	150	150C	2.8k	6.0m	200J	Si	S548a
50	154K5A	50	150	150C	2.8k	6.0m	200J	Si	S549
51	154L5A	50	150	150C	2.8k	6.0m	200J	Si	S549a
52	1SM150	80	150		3.6k			Si	M986
53	1N1474	100	150				190J	Si	M56f
54▼	SR15001	100	150					Si	
55	A187A	100	150	50C	2.8k	8.3m	125J	Si△	S120jØ
56	1N2437	100	150	75C	1.2k		175B	Si△	DO8
57	45MA10	100	150	76C	1.7k	10m	150J	Si	S435g
58	1N4587	100	150	110	3.0k		200A	Si	DO8Ø
59	R5D00115WA	100	150	110C	3.0k	8.3m	200J	Si	DO30Ø
60	M151-100	100	150	115C	3.5k§	10m	175C	Si	S468Ø
61	45M10	100	150	116B	3.0k	10m	175A	Si	S427
62	150BC15	100	150	117C	1.6k	10m	175J	Si	S427
63	G6B3	100	150	125C	2.1k	8.3m	190C	Si	DO8
64	S4310	100	150	125C	2.1k	8.3m	190J	Si△	DO8Ø
65	S4310TS	100	150	125C	2.1k	8.3m	190J	Si△	S464
66	M151-100R	100	150	140A	4.5k		175J	Si	S468
67	A180A	100	150	143C	3.4k	8.3m	200J	Si△	S120jØ
68	1N3085	100	150	150C	3.0k§	8.3m	200C	Si	DO30
69	150K10A	100	150	150C	3.0k§	8.3m	200J	Si*	DO8Ø
70	150KS10	100	150	150C	2.8k	6.0m	200J	Si	S550
71	150L10A	100	150	150C	3.0k§	8.3m	200J	Si*	DO30Ø
72	152K10A	100	150	150C	2.8	6.0m	200J	Si	S548
73	152L10A	100	150	150C	2.8k	6.0m	200J	Si	S548a
74	154K10A	100	150	150C	2.8k	6.0m	200J	Si	S549
75	154L10A	100	150	150C	2.8k	6.0m	200J	Si	S549a
76	ST16-10	100	150	150C	3.0k	4.0m	200C	Si	S128bØ
77	1N2438	150	150	75C	1.2k		175B	Si△	DO8
78	S4315	150	150	125C	2.1k	8.3m	190J	Si△	DO8Ø
79	S4315TS	150	150	125C	2.1k	8.3m	190J	Si△	S464
80	152L15A	150	150	150C	2.8k	6.0m	200J	Si	S548a
81	2SM150	160	150		3.6k			Si	M986
82	1N1475	200	150				190J	Si	M56f
83▼	SR15002	200	150					Si	
84	A187B	200	150	50C	2.8k	8.3m	125J	Si△	S120jØ
85	1N2439	200	150	75C	1.2k		175B	Si△	DO8
86	45MA20	200	150	76C	1.7k	10m	150J	Si	S435g
87	1N4588	200	150	110	3.0k		200A	Si	DO8Ø
88	R5D00215WA	200	150	110C	3.0k	8.3m	200J	Si	DO30Ø
89	R5100215WA	200	150	110C	3.0k	8.3m	200J	Si	DO8Ø
90	M151-200	200	150	115C	3.5k§	10m	175C	Si	S468Ø
91	45M20	200	150	116B	3.0k	10m	175A	Si	S427
92	150DC15	200	150	117C	1.6k	10m	175J	Si	S427
93	FD150B4	200	150	118C	3.0k§	8.3m	150J	Si△	M849
94	G6C3	200	150	125C	2.1k	8.3m	190C	Si	DO8
95	S4320	200	150	125C	2.1k	8.3m	190J	Si△	DO8Ø
96	S4320TS	200	150	125C	2.1k	8.3m	190J	Si△	S464
97▼	SD150N02M	200	150	125C	3.6k	10m	180J	Si	S569
98▼	SD150N02P	200	150	125C	3.6k	10m	180J	Si	S569
99▼	SD150R02M	200	150	125C	3.6k	10m	180J	Si	S569
100▼	SD150R02P	200	150	125C	3.6k	10m	180J	Si	S569
101	SW02PHN151	200	150	125C	3.2k	10m	180J	Si	S435j
102▼	D255NR200B	200	150	130C	4.9k§	10m	180J	Si	S532b
103▼	D255NR200V	200	150	130C	4.9k§	10m	180J	Si	S532b
104	M151-200R	200	150	140A	4.5k		175J	Si	S468
105	A180B	200	150	143C	3.4k	8.3m	200J	Si△	S120jØ
106	1N3086	200	150	150C	3.0k§	8.3m	200C	Si	DO30
107	150K20A	200	150	150C	3.0k§	8.3m	200J	Si*	DO8Ø
108	150KS20	200	150	150C	2.8k	6.0m	200J	Si	S550
109	152K20A	200	150	150C	2.8	6.0m	200J	Si	S548
110	152L20A	200	150	150C	2.8k	6.0m	200J	Si	S548a
111	154K20A	200	150	150C	2.8k	6.0m	200J	Si	S549
112	154L20A	200	150	150C	2.8k	6.0m	200J	Si	S549a
113	ST16-20	200	150	150C	3.0k	4.0m	200C	Si	S128bØ
114	1N2440	250	150	75C	1.2k		175B	Si△	DO8
115	G6D3	250	150	125C	2.1k	8.3m	190C	Si	DO8
116	S4325	250	150	125C	2.1k	8.3m	190J	Si△	DO8Ø
117	S4325TS	250	150	125C	2.1k	8.3m	190J	Si△	S464
118	152L25A	250	150	150C	2.8k	6.0m	200J	Si	S548a
119	1N1476	300	150				190J	Si	M56f
120▼	SR15003	300	150					Si	
121	A187C	300	150	50C	2.8k	8.3m	125J	Si△	S120jØ
122	1N2441	300	150	75C	1.2k		175B	Si△	DO8
123	45MA30	300	150	76C	1.7k	10m	150J	Si	S435g
124	1N4589	300	150	110	3.0k		200A	Si	DO8Ø
125	R5D00315WA	300	150	110C	3.0k	8.3m	200J	Si	DO30Ø
126	45M30	300	150	116B	3.0k	10m	175A	Si	S427
127	150FC15	300	150	117C	1.6k	10m	175J	Si	S427
128	FD150B6	300	150	118C	3.0k§	8.3m	150J	Si△	M849
129	G6E3	300	150	125C	2.1k	8.3m	190C	Si	DO8
130	S4330	300	150	125C	2.1k	8.3m	190J	Si△	DO8Ø
131	S4330TS	300	150	125C	2.1k	8.3m	190J	Si△	S464
132	A180C	300	150	143C	3.4k	8.3m	200J	Si△	S120jØ
133	1N3087	300	150	150C	3.0k§	8.3m	200C	Si	DO30
134	150KS30	300	150	150C	2.8k	6.0m	200J	Si	S550
135	150L30A	300	150	150C	3.0k§	8.3m	200J	Si*	DO30Ø
136	152K30A	300	150	150C	2.8	6.0m	200J	Si	S548
137	152L30A	300	150	150C	2.8k	6.0m	200J	Si	S548a
138	154K30A	300	150	150C	2.8k	6.0m	200J	Si	S549
139	154L30A	300	150	150C	2.8k	6.0m	200J	Si	S549a
140	ST16-30	300	150	150C	3.0k	4.0m	200C	Si	S128bØ
141	4SM150	320	150		3.6k			Si	M986
142	1N2442	350	150	75C	1.2k		175B	Si△	DO8
143	G6F3	350	150	125C	2.1k	8.3m	190C	Si	DO8
144	S4335	350	150	125C	2.1k	8.3m	190J	Si△	DO8Ø
145	S4335TS	350	150	125C	2.1k	8.3m	190J	Si△	S464
146	1N1477	400	150				190J	Si	M56f
147▼	SR15004	400	150					Si	
148	KGD1611SX	400	150	45A	1.8k			Si	M1088
149	A187D	400	150	50C	2.8k	8.3m	125J	Si△	S120jØ
150	1N2443	400	150	75C	1.2k		175B	Si△	DO8
151	45MA40	400	150	76C	1.7k	10m	150J	Si	S435g
152	BYX32-400	400	150	100A	1.6k	10m	190J	Si△	S203bØ
153	1N4590	400	150	110	3.0k		200A	Si	DO8Ø
154	R5D00415WA	400	150	110C	3.0k	8.3m	200J	Si	DO30Ø
155	M151-400	400	150	115C	3.5k§	10m	175C	Si	S468Ø
156	45M40	400	150	116B	3.0k	10m	175A	Si	S427
157	150GC15	400	150	117C	1.6k	10m	175J	Si	S427
158	FD150B8	400	150	118C	3.0k§	8.3m	150J	Si△	M849
159	BYX14-400	400	150	125C	3.0k	10m	190J	Si	M294Ø
160	G6G3	400	150	125C	2.1k	8.3m	190C	Si	DO8
161	S4340	400	150	125C	2.1k	8.3m	190J	Si△	DO8Ø
162	S4340TS	400	150	125C	2.1k	8.3m	190J	Si△	S464
163▼	SD150N04M	400	150	125C	3.6k	10m	180J	Si	S569
164▼	SD150N04P	400	150	125C	3.6k	10m	180J	Si	S569
165▼	SD150R04M	400	150	125C	3.6k	10m	180J	Si	S569
166▼	SD150R04P	400	150	125C	3.6k	10m	180J	Si	S569
167	SW04PHN151	400	150	125C	3.2k	10m	180J	Si	S435j
168▼	D255NR400B	400	150	130C	4.9k§	10m	180J	Si	S532b
169▼	D255NR400V	400	150	130C	4.9k§	10m	180J	Si	S532b
170	M151-400R	400	150	140A	4.5k		175J	Si	S468
171	A180D	400	150	143C	3.4k	8.3m	200J	Si△	S120jØ
172	1N3088	400	150	150C	3.0k§	8.3m	200C	Si	DO30
173	150KS40	400	150	150C	2.8k	6.0m	200J	Si	S550
174	152K40A	400	150	150C	2.8	6.0m	200J	Si	S548
175	152L40A	400	150	150C	2.8k	6.0m	200J	Si	S548a
176	154K40A	400	150	150C	2.8k	6.0m	200J	Si	S549
177	154L40A	400	150	150C	2.8k	6.0m	200J	Si	S549a
178	ST16-40	400	150	150C	3.0k	4.0m	200C	Si	S128bØ
179	S4345	450	150	125C	2.1k	8.3m	190J	Si△	DO8Ø
180	S4345TS	450	150	125C	2.1k	8.3m	190J	Si△	S464
181	6SM150	480	150		3.6k			Si	M986
182	A187E	500	150	50C	2.8k	8.3m	125J	Si△	S120jØ
183	1N2444	500	150	75C	1.2k		175B	Si△	DO8
184	1N4591	500	150	110	3.0k		200A	Si	DO8Ø
185	R5D00515WA	500	150	110C	3.0k	8.3m	200J	Si	DO30Ø
186	45M50	500	150	116B	3.0k	10m	175A	Si	S427
187	FD150B10	500	150	118C	3.0k§	8.3m	150J	Si△	M849
188	G6H3	500	150	125C	2.1k	8.3m	190C	Si	DO8
189	S4350	500	150	125C	2.1k	8.3m	190J	Si△	DO8Ø
190	S4350TS	500	150	125C	2.1k	8.3m	190J	Si△	S464
191	A180E	500	150	143C	3.4k	8.3m	200J	Si△	S120jØ
192	1N3089	500	150	150C	3.0k§	8.3m	200C	Si	DO30
193	152L50A	500	150	150C	2.8k	6.0m	200J	Si	S548a
194	ST16-50	500	150	150C	3.0k	4.0m	200C	Si	S128bØ
195▼	SR15006	600	150					Si	
196	A187M	600	150	50C	2.8k	8.3m	125J	Si△	S120jØ
197	1N2445	600	150	75C	1.2k		175B	Si△	DO8
198	45MA60	600	150	76C	1.7k	10m	150J	Si	S435g
199	BYX32-600	600	150	100A	1.6k	10m	190J	Si	S203bØ
200	1N4592	600	150	110	3.0k		200A	Si	DO8Ø
201	R5D00615WA	600	150	110C	3.0k	8.3m	200J	Si	DO30Ø
202	M151-600	600	150	115C	3.5k§	10m	175C	Si	S468Ø
203	45M60	600	150	116B	3.0k	10m	175A	Si	S427
204	150JC15	600	150	117C	1.6k	10m	175J	Si	S427
205	G6K3	600	150	125C	2.1k	8.3m	190C	Si	DO8
206	S4360	600	150	125C	2.1k	8.3m	190J	Si△	DO8Ø
207	S4360TS	600	150	125C	2.1k	8.3m	190J	Si△	S464
208▼	SD150N06M	600	150	125C	3.6k	10m	180J	Si	S569
209▼	SD150N06P	600	150	125C	3.6k	10m	180J	Si	S569
210▼	SD150R06M	600	150	125C	3.6k	10m	180J	Si	S569
211▼	SD150R06P	600	150	125C	3.6k	10m	180J	Si	S569
212	SW06PHN151	600	150	125C	3.2k	10m	180J	Si	S435j
213▼	D255NR600B	600	150	130C	4.9k§	10m	180J	Si	S532b
214▼	D255NR600V	600	150	130C	4.9k§	10m	180J	Si	S532b
215	M151-600R	600	150	140A	4.5k		175J	Si	S468
216	A180M	600	150	143C	3.4k	8.3m	200J	Si△	S120jØ
217	R5000615WA	600	150	148C	3.0k	8.3m	200J	Si	DO8Ø
218	1N3090	600	150	150C	3.0k§	8.3m	200C	Si	DO30
219	150K60A	600	150	150C	3.0k§	8.3m	200J	Si*	DO8Ø
220	150KS60	600	150	150C	2.8k	6.0m	200J	Si	S550

SYMBOLS AND CODES EXPLAINED IN INTERPRETER

5. GENERAL-PURPOSE RECTIFIERS - $I_o \geq 100$ A (Cont'd)

IN ORDER OF: (1) IO MAX (2) PIV
(3) ° TEMP & (4) TYPE NMBER

LINE No.	4 TYPE NUMBER	2 PIV (V)	MAX AVG FWD DC CURRENT 1 Io MAX (A)	3 @ TEMP (°C)	MAX RATING SURGE CURR PEAK 1 Cy (A)	PULSE WIDTH (s)	MAX. TEMP (°C)	MAT	DRAWING No.
1	150L60A	600	150	150C	3.0k§	8.3m	200J	Si*	DO30Ø
2	152K60A	600	150	150C	2.8	6.0m	200J	Si	S548
3	152L60A	600	150	150C	2.8k	6.0m	200J	Si	S548a
4	154K60A	600	150	150C	2.8k	6.0m	200J	Si	S549
5	154L60A	600	150	150C	2.8k	6.0m	200J	Si	S549a
6	ST16-60	600	150	150C	3.0k	4.0m	200C	Si	S128bØ
7	8SM150	640	150		3.6k			Si	M986
8	KGD1612SX	700	150	45A	1.8k			Si	M1088
9	A187S	700	150	50C	2.8k	8.3m	125J	SiΔ	S120jØ
10	R5D00715WA	700	150	110C	3.0k	8.3m	200J	Si	DO30Ø
11	G6M3	700	150	125C	2.1k	8.3m	190C	Si	DO8
12	S4370	700	150	125C	2.1k	8.3m	190J	SiΔ	DO8Ø
13	S4370TS	700	150	125C	2.1k	8.3m	190J	SiΔ	S464
14▼	D255NR700B	700	150	130C	4.9k§	10m	180J	Si	S532b
15▼	D255NR700V	700	150	130C	4.9k§	10m	180J	Si	S532b
16	A180S	700	150	143C	3.4k	8.3m	200J	SiΔ	S120jØ
17	152L70A	700	150	150C	2.8k	6.0m	200J	Si	S548a
18	ST16-70	700	150	150C	3.0k	4.0m	200C	Si	S128bØ
19	10SM150	800	150		3.6k			Si	M986
20▼	SR15008	800	150					Si	
21	A187N	800	150	50C	2.8k	8.3m	125J	SiΔ	S120jØ
22	45MA80	800	150	76C	1.7k	10m	150J	Si	S435g
23	BYX32-800	800	150	100A	1.6k	10m	190J	Si	S203bØ
24	R5D00815WA	800	150	110C	3.0k	8.3m	200J	Si	DO30Ø
25	150LD13	800	150	114C	4.5k	10m	150J	Si	S529
26	M151-800	800	150	115C	3.5k§	10m	175C	Si	S468Ø
27	45M80	800	150	116B	3.0k	10m	175A	Si	S427
28	150LC15	800	150	117C	1.6k	10m	175J	Si	S427
29	BYX14-800	800	150	125C	3.0k	10m	190J	Si	M294Ø
30	G6N3	800	150	125C	2.1k	8.3m	190C	Si	DO8
31	S4380	800	150	125C	2.1k	8.3m	190J	SiΔ	DO8Ø
32	S4380TS	800	150	125C	2.1k	8.3m	190J	SiΔ	S464
33▼	SD150N08M	800	150	125C	3.6k	10m	180J	Si	S569
34▼	SD150N08P	800	150	125C	3.6k	10m	180J	Si	S569
35▼	SD150R08M	800	150	125C	3.6k	10m	180J	Si	S569
36▼	SD150R08P	800	150	125C	3.6k	10m	180J	Si	S569
37	SW08PHN151	800	150	125C	3.2k	10m	180J	Si	S435j
38▼	D255NR800B	800	150	130C	4.9k§	10m	180J	Si	S532b
39▼	D255NR800V	800	150	130C	4.9k§	10m	180J	Si	S532b
40	M151-800R	800	150	140A	4.5k		175J	Si	S468
41	A180N	800	150	143C	3.4k	8.3m	200J	SiΔ	S120jØ
42	1N3091	800	150	150C	3.0k§	8.3m	200C	Si	DO30
43	150K80A	800	150	150C	3.0k§	8.3m	200J	Si*	DO8Ø
44	150KS80	800	150	150C	2.8k	6.0m	200J	Si	S550
45	152K80A	800	150	150C	2.8	6.0m	200J	Si	S548
46	152L80A	800	150	150C	2.8k	6.0m	200J	Si	S548a
47	154K80A	800	150	150C	2.8k	6.0m	200J	Si	S549
48	154L80A	800	150	150C	2.8k	6.0m	200J	Si	S549a
49	ST16-80	800	150	150C	3.0k	4.0m	200C	Si	S128bØ
50	A187T	900	150	50C	2.8k	8.3m	125J	SiΔ	S120jØ
51	R5D00915WA	900	150	110C	3.0k	8.3m	200J	Si	DO30Ø
52	S4390	900	150	125C	2.1k	8.3m	190J	SiΔ	DO8Ø
53	S4390TS	900	150	125C	2.1k	8.3m	190J	SiΔ	S464
54	A180T	900	150	143C	3.4k	8.3m	200J	SiΔ	S120jØ
55	152L90A	900	150	150C	2.8k	6.0m	200J	Si	S548a
56	154L90A	900	150	150C	2.8k	6.0m	200J	Si	S549a
57▼	SR15010	1.0k	150					Si	
58	SC3HAS6N	600	155	55C	750		175J	Si	M1272
59	SC3HAS6P	600	155	55C	750		175J	Si	M1272
60	1N1281	50 *	160	125C	1.3k		190J	Si	S14g
61	1N1291	50 *	160	125C	1.3k		190J	Si	S8e
62	1N3260	50	160	125C	2.0k		190C	Si	DO9
63	H6A3	50	160	126C	2.5k	8.3m	190C	Si	DO9
64	ST7-10	100	160	25A	3.0k		190J	Si	Z28
65	ST10-10	100	160	25A	3.0k		190J	Si	Z27
66	1N4879	100	160	120C	2.2k		150C	Si	DO9
67	1N1282	100 *	160	125C	1.3k		190J	Si	S14g
68	1N1292	100 *	160	125C	1.3k		190J	Si	S8e
69	1N3261	100	160	125C	2.0k		190C	Si	DO9
70	H6B3	100	160	126C	2.5k	8.3m	190C	Si	DO9
71	1N1283	150 *	160	125C	1.3k		190J	Si	S14g
72	1N1293	150 *	160	125C	1.3k		190J	Si	S8e
73	1N3262	150	160	125C	2.0k		190C	Si	DO9
74	ST7-20	200	160	25A	3.0k		190J	Si	Z28
75	ST10-20	200	160	25A	3.0k		190J	Si	Z27
76	1N1284	200 *	160	125C	1.3k		190J	Si	S14g
77	1N1294	200 *	160	125C	1.3k		190J	Si	S8e
78	1N3263	200	160	125C	2.0k		190C	Si	DO9
79	H6C3	200	160	126C	2.5k	8.3m	190C	Si	DO9
80	1N3264	250	160	125C	2.0k		190C	Si	DO9
81	H6D3	250	160	126C	2.5k	8.3m	190C	Si	DO9
82	ST7-30	300	160	25A	3.0k		190J	Si	Z28
83	ST10-30	300	160	25A	3.0k		190J	Si	Z27
84	1N1285	300 *	160	125C	1.3k		190J	Si	S14g
85	1N1295	300 *	160	125C	1.3k		190J	Si	S8e
86	1N3265	300	160	125C	2.0k		190C	Si	DO9
87	H6E3	300	160	126C	2.5k	8.3m	190C	Si	DO9
88	1N3266	350	160	125C	2.0k		190C	Si	DO9
89	H6F3	350	160	126C	2.5k	8.3m	190C	Si	DO9
90	ST7-40	400	160	25A	3.0k		190J	Si	Z28
91	ST10-40	400	160	25A	3.0k		190J	Si	Z27
92	DS110-04A	400	160	75C	3.2k§	10m	180J	Si	S408e
93	1N1286	400 *	160	125C	1.3k		190J	Si	S14g
94	1N1296	400 *	160	125C	1.3k		190J	Si	S8e
95	1N3267	400	160	125C	2.0k		190C	Si	DO9
96	H6G3	400	160	126C	2.5k	8.3m	190C	Si	DO9
97	SSiK3825	400	160	126	4.0k	10m	180J	SiΔ	S72mΔ
98	SSiK3925	400	160	126	4.0k	10m	180J	SiΔ	S72mΔ
99	ST7-50	500	160	25A	3.0k		190J	Si	Z28
100	ST10-50	500	160	25A	3.0k		190J	Si	Z27
101	1N1287	500 *	160	125C	1.3k		190J	Si	S14g
102	1N1297	500 *	160	125C	1.3k		190J	Si	S8e
103	1N3268	500	160	125C	2.0k		190C	Si	DO9
104	H6H3	500	160	126C	2.5k	8.3m	190C	Si	DO9
105	ST7-60	600	160	25A	3.0k		190J	Si	Z28
106	ST10-60	600	160	25A	3.0k		190J	Si	Z27
107	1N3269	600	160	125C	2.0k		190C	Si	DO9
108	H6K3	600	160	126C	2.5k	8.3m	190C	Si	DO9
109	1N3270	700	160	125C	2.0k		190J	Si	DO9Ø
110	H6M3	700	160	126C	2.5k	8.3m	190C	Si	DO9
111	SSiK3840	700	160	126	4.0k	10m	180J	SiΔ	S72mΔ
112	SSiK3940	700	160	126	4.0k	10m	180J	SiΔ	S72mΔ
113	DS110-08A	800	160	98C	3.2k	10m	180J	Si	
114	1N3271	800	160	125C	2.0k		190J	Si	DO9Ø
115	H6N3	800	160	126C	2.5k	8.3m	190C	Si	DO9
116	1N3272	900	160	125C	2.0k		190J	Si	DO9Ø
117	SKN130/02	200	165	100C	2.0k	10m	180J	Si	DO8
118	SKR130/02	200	165	100C	2.0k	10m	180J	Si	DO30
119	SKN130/04	400	165	100C	2.0k	10m	180J	Si	DO8
120	SKR130/04	400	165	100C	2.0k	10m	180J	Si	DO30
121	SKN130/08	800	165	100C	2.0k	10m	180J	Si	DO8
122	SKR130/08	800	165	100C	2.0k	10m	180J	Si	DO30
123	SR170L-2R	100	170	112C	3.2k§	8.3m	150J	Si§	M1110
124	SR170L-2S	100	170	112B	3.2k§	8.3m	150J	SiΔ	M1110
125	SR170L-4R	200	170	112C	3.2k§	8.3m	150J	Si§	M1110
126	SR170L-4S	200	170	112B	3.2k§	8.3m	150J	SiΔ	M1110
127	SR170L-6R	300	170	112C	3.2k§	8.3m	150J	Si§	M1110
128	SR170L-6S	300	170	112B	3.2k§	8.3m	150J	SiΔ	M1110
129	KGB0711SX	400	170	45A	2.8k	10m		Si	M1088
130	SR170L-8R	400	170	112C	3.2k§	8.3m	150J	Si§	M1110
131	SR170L-8S	400	170	112B	3.2k§	8.3m	150J	SiΔ	M1110
132	SR170L-10R	500	170	112C	3.2k§	8.3m	150J	Si§	M1110
133	SR170L-10S	500	170	112B	3.2k§	8.3m	150J	SiΔ	M1110
134	KGB0712SX	700	170	45A	2.8k	10m		Si	M1088
135	1N3161	50	175	150C	3.0k		190J	Si	DO9
136	1N3162	100	175	150C	3.0k		190J	Si	DO9
137	1N3163	150	175	150C	3.0k		190J	Si	DO9
138	1N3164	200	175	150C	3.0k		190J	Si	DO9
139	1N3165	250	175	150C	3.0k		190J	Si	DO9
140	1N3166	300	175	150C	3.0k		190J	Si	DO9
141	1N3167	350	175	150C	3.0k		190J	Si	DO9
142	1N3168	400	175	150C	3.0k		190J	Si	DO9
143	1N3169	500	175	150C	3.0k		190J	Si	DO9
144	1N3170	600	175	150C	3.0k		190J	Si	DO9
145	DS175-02L	200	182	100C	2.8k§	10m	150J	Si	S506dØ
146	DS175-04L	400	182	100C	2.8k§	10m	150J	Si	S506dØ
147	DS175-06L	600	182	100C	2.8k§	10m	150J	Si	S506dØ
148	DS175-08L	800	182	100C	2.8k§	10m	150J	Si	S506dØ

$I_o \geq 200$ A

LINE No.	TYPE NUMBER	PIV (V)	Io MAX (A)	TEMP (°C)	PEAK 1 Cy (A)	PULSE WIDTH (s)	TEMP (°C)	MAT	DRAWING No.
152	G200R4	48	200	25C	3.6k		110J	Ge	DO200A
153	G200R4SB	48	200	25C	3.6k		110J	Ge	DO9
154	1SM200	80	200		4.5k			Si	M986
155	1N1478	100	200				190J	Si	M56c
156▼	SR20001	100	200					Si	
157	2SM200	160	200		4.5k			Si	M986
158▼	SR20002	200	200					Si	
159	S200-02	200	200	50A	4.0k	10m	150J	Si	S480
160	1S941#B	200	200	83	5.4k	20m	150J	SiΔ	M26
161	SV2002	200	200	100C	4.0k	10m	150J	Si	DO8
162	SR200L-4R	200	200	109C	3.6k	8.3m	150J	SiΔ	M1110
163▼	SD200N02M	200	200	110C	4.7k	10m	180J	Si	S569
164▼	SD200N02P	200	200	110C	4.7k	10m	180J	Si	S569
165▼	SD200R02M	200	200	110C	4.7k	10m	180J	Si	S569
166▼	SD200R02P	200	200	110C	4.7k	10m	180J	Si	S569
167	SW02PHN201	200	200	110C	4.2k	10m	180J	Si	S435j
168▼	D255N200B	200	200	130C	5.4k§	10m	180J	Si	S532b
169▼	D255N200V	200	200	130C	5.4k§	10m	180J	Si	S532b
170▼	SR20003	300	200					Si	
171	SR200L-6R	300	200	109C	3.6k	8.3m	150J	SiΔ	M1110
172	4SM200	320	200		4.5k			Si	M986
173▼	SR20004	400	200					Si	
174	IRKD200-04	400	200	25J	9.0k		125J	Si	M1274 *
175	IRKD240-04	400	200	25J	10k		125J	Si	M1274c*
176	IRKE200-04	400	200	25J	9.0k		125J	Si	M1274a
177	IRKE240-04	400	200	25J	10k		125J	Si	M1274b
178	S200-04	400	200	50A	4.0k	10m	150J	Si	S480
179	SCDAS4A	400	200	55C	750		150	Si	M1029
180	1S942#B	400	200	83	5.4k	20m	150J	SiΔ	M26
181	SV2004	400	200	100C	4.0k	10m	150J	Si	DO8
182	SR200L-8R	400	200	109C	3.6k	8.3m	150J	SiΔ	M1110
183▼	SD200N04M	400	200	110C	4.7k	10m	180J	Si	S569
184▼	SD200N04P	400	200	110C	4.7k	10m	180J	Si	S569
185▼	SD200R04M	400	200	110C	4.7k	10m	180J	Si	S569
186▼	SD200R04P	400	200	110C	4.7k	10m	180J	Si	S569
187	SW04PHN201	400	200	110C	4.2k	10m	180J	Si	S435j
188▼	D255N400B	400	200	130C	5.4k§	10m	180J	Si	S532b
189▼	D255N400V	400	200	130C	5.4k§	10m	180J	Si	S532b
190	6SM200	480	200		4.5k			Si	M986
191	SR200L-10R	500	200	109C	3.6k	8.3m	150J	SiΔ	M1110
192▼	SR20006	600	200					Si	
193	IRKD200-06	600	200	25J	9.0k		125J	Si	M1274 *
194	IRKD240-06	600	200	25J	10k		125J	Si	M1274c*
195	IRKE200-06	600	200	25J	9.0k		125J	Si	M1274a
196	IRKE240-06	600	200	25J	10k		125J	Si	M1274b
197	S200-06	600	200	50A	4.0k	10m	150J	Si	S480
198	SV2006	600	200	100C	4.0k	10m	150J	Si	DO8
199▼	SD200N06M	600	200	110C	4.7k	10m	180J	Si	S569
200▼	SD200N06P	600	200	110C	4.7k	10m	180J	Si	S569
201▼	SD200R06M	600	200	110C	4.7k	10m	180J	Si	S569
202▼	SD200R06P	600	200	110C	4.7k	10m	180J	Si	S569
203	SW06PHN201	600	200	110C	4.2k	10m	180J	Si	S435j
204▼	D255N600B	600	200	130C	5.4k§	10m	180J	Si	S532b
205▼	D255N600V	600	200	130C	5.4k§	10m	180J	Si	S532b
206	8SM200	640	200		4.5k			Si	M986
207▼	D255N700B	700	200	130C	5.4k§	10m	180J	Si	S532b
208▼	D255N700V	700	200	130C	5.4k§	10m	180J	Si	S532b
209	10SM200	800	200		4.5k			Si	M986
210▼	SR20008	800	200					Si	
211	IRKD200-08	800	200	25J	9.0k		125J	Si	M1274 *
212	IRKD240-08	800	200	25J	10k		125J	Si	M1274c*
213	IRKE200-08	800	200	25J	9.0k		125J	Si	M1274a
214	IRKE240-08	800	200	25J	10k		125J	Si	M1274b
215	S200-08	800	200	50A	4.0k	10m	150J	Si	S480
216	SV2008	800	200	100C	4.0k	10m	150J	Si	DO8
217▼	SD200N08M	800	200	110C	4.7k	10m	180J	Si	S569
218▼	SD200N08P	800	200	110C	4.7k	10m	180J	Si	S569
219▼	SD200R08M	800	200	110C	4.7k	10m	180J	Si	S569
220▼	SD200R08P	800	200	110C	4.7k	10m	180J	Si	S569

SYMBOLS AND CODES EXPLAINED IN INTERPRETER

5. GENERAL-PURPOSE RECTIFIERS - $I_O \geq 200$ A (Cont'd)

IN ORDER OF: (1) IO MAX (2) PIV (3) ° TEMP & (4) TYPE NMBER

LINE No.	4 TYPE NUMBER	2 PIV (V)	MAX AVG FWD DC CURRENT 1 Io MAX (A)	3 @ TEMP (°C)	MAX RATING SURGE CURR PEAK 1 Cy (A)	PULSE WIDTH (s)	MAX. TEMP (°C)	MAT	DRAWING No.
1	SW08PHN201	800	200	110C	4.2k	10m	180J	Si	S435j
2▼	D255N800B	800	200	130C	5.4k§	10m	180J	Si	S532b
3▼	D255N800V	800	200	130C	5.4k§	10m	180J	Si	S532b
4▼	SR20010	1.0k	200					Si	
5▼	SR20012	1.2k	200					Si	
6	KGD1711SX	400	210	45A	2.8k			Si	M1088
7	S20N500JA	400	210	100C	4.5k§	10m	150J	Si△	M378
8	S20P500JA	400	210	100C	4.0k§	10m	175J	Si△	M378
9	S20N600JA	500	210	100C	4.5k§	10m	150J	Si△	M378
10	S20P600JA	500	210	100C	4.0k§	10m	175J	Si△	M378
11	S20N700JA	600	210	100C	4.5k§	10m	150J	Si△	M378
12	S20P700JA	600	210	100C	4.0k§	10m	175J	Si△	M378
13	KGD1712SX	700	210	45A	2.8k			Si	M1088
14	S20N800JA	700	210	100C	4.5k§	10m	150J	Si△	M378
15	S20P800JA	700	210	100C	4.0k§	10m	175J	Si△	M378
16	S20N900JA	800	210	100C	4.5k§	10m	150J	Si△	M378
17	S20P900JA	800	210	100C	4.0k§	10m	175J	Si△	M378
18	S20N1000JA	900	210	100C	4.5k§	10m	150J	Si△	M378
19	S20P1000JA	900	210	100C	4.0k§	10m	175J	Si△	M378
20	H701	90	220	55	20		125J	Si	M1213
21	H466	100	220	55	20		125J	Si	M887
22	H540	100	220	55	20		125J	Si	M1212
23	H702	120	220	55	20		125J	Si	M1213a
24	H467	125	220	55	20		125J	Si	M887
25	H541	125	220	55	20		125J	Si	M1212a
26	H468	150	220	55	20		125J	Si	M887
27	H542	150	220	55	20		125J	Si	M1212b
28	H703	150	220	55	20		125J	Si	M1213b
29	H704	180	220	55	20		125J	Si	M1213b
30	R6020422PSYA	400	220		3.5k		150J	Si	DO9⊠
31	R6020622PSYA	600	220	150J	3.5k	5.0m	150J	Si	DO9⊠
32	R6020722PSYA	700	220	150J	3.5k	5.0m	150J	Si	DO9⊠
33	R6020822PSYA	800	220	150J	3.5k	5.0m	150J	Si	DO9⊠
34	R6020922PSYA	900	220	150J	3.5k	5.0m	150J	Si	DO9⊠
35	1N1670	50 *	240	120C	1.8k		190J	Si	S14f
36	1N1330	50 *	240	125C	1.8k		190J	Si	S14q
37	1N1376	50 *	240	125C	1.8k		190J	Si	S14h
38	FD200B2	100	240	86C	5.0k§	8.3m	150J	Si△	M568
39	1S2342	100	240	92C	5.0k§	8.3m	150J	Si△	M568
40	1N1671	100 *	240	120C	1.8k		190J	Si	S14f
41	1N1331	100 *	240	125C	1.8k		190J	Si	S14q
42	1N1377	100 *	240	125C	1.8k		190J	Si	S14h
43	1N1672	150 *	240	120C	1.8k		190J	Si	S14f
44	1N1332	150 *	240	125C	1.8k		190J	Si	S14q
45	1N1378	150 *	240	125C	1.8k		190J	Si	S14h
46	FD200B4	200	240	86C	5.0k§	8.3m	150J	Si△	M568
47	1S2343	200	240	92C	5.0k§	8.3m	150J	Si△	M568
48	SKN2M240/02	200	240	96C	4.7k	10m	150J	Si	DO9
49	SKR2M240/02	200	240	96C	4.7k	10m	150J	Si	DO9
50	1N1673	200 *	240	120C	1.8k		190J	Si	S14f
51	1N1333	200 *	240	125C	1.8k		190J	Si	S14q
52	1N1379	200 *	240	125C	1.8k		190J	Si	S14h
53	DS240-02A	200	240	125C	5.8k§	10m	175J	Si	S433⊠
54	1N1674	300 *	240	120C	1.8k		190J	Si	S14f
55	1N1334	300 *	240	125C	1.8k		190J	Si	S14q
56	1N1380	300 *	240	125C	1.8k		190J	Si	S14h
57	FD200B8	400	240	86C	5.0k§	8.3m	150J	Si△	M568
58	1S2344	400	240	92C	5.0k§	8.3m	150J	Si△	M568
59	SKN2M240/04	400	240	96C	4.7k	10m	150J	Si	DO9
60	SKR2M240/04	400	240	96C	4.7k	10m	150J	Si	DO9
61	1N1675	400 *	240	120C	1.8k		190J	Si	S14f
62	1N1335	400 *	240	125C	1.8k		190J	Si	S14q
63	1N1381	400 *	240	125C	1.8k		190J	Si	S14h
64	DS240-04A	400	240	125C	5.9k§	10m	175J	Si	S433⊠
65	1S2345	500	240	92C	5.0k§	8.3m	150J	Si△	M568
66	1N1676	500 *	240	120C	1.8k		190J	Si	S14f
67	1N1336	500 *	240	125C	1.8k		190J	Si	S14q
68	1N1382	500 *	240	125C	1.8k		190J	Si	S14h
69	1S2346	600	240	92C	5.0k§	8.3m	150J	Si△	M568
70	SKN2M240/06	600	240	96C	4.7k	10m	150J	Si	DO9
71	SKR2M240/06	600	240	96C	4.7k	10m	150J	Si	DO9
72	SR200DL12R	600	240	113C	5.0k	8.3m	175J	Si△	S435c
73	SR200DL-12S	600	240	113C	5.0k	8.3m	175J	Si§	S435
74	DS240-06A	600	240	125C	5.9k§	10m	175J	Si	S433⊠
75	1N3171	700	240	105C	3.0k	8.3m	175C	Si	DO9
76	1N3171A	700 *	240	120C	3.0k		190J	Si	S14e
77	DS240-07A	700	240	125C	5.8k§	10m	175J	Si	S433⊠
78	FD200B16	800	240	86C	5.0k§	8.3m	150J	Si△	M568
79	1S2347	800	240	92C	5.0k§	8.3m	150J	Si△	M568
80	SKN2M240/08	800	240	96C	4.7k	10m	150J	Si	DO9
81	SKR2M240/08	800	240	96C	4.7k	10m	150J	Si	DO9
82	1N3172	800	240	105C	3.0k	8.3m	175C	Si	DO9
83	SR200DL16R	800	240	113C	5.0k	8.3m	175J	Si△	S435c
84	SR200DL-16S	800	240	113C	5.0k	8.3m	175J	Si§	S435
85	1N3172A	800 *	240	120C	3.0k		190J	Si	S14e
86	1N3173	900	240	105C	3.0k	8.3m	175C	Si	DO9
87	1N3173A	900 *	240	120C	3.0k		190J	Si	S14e
88	SSiL30100A		250		4.7k	10m	180J	Si	S345
89	J5A3	50	250	122C	4.5k	8.3m	190C	Si	DO9
90	S5305	50	250	122C	4.5k	8.3m	190J	Si△	DO9⊠
91	S5305TS	50	250	122C	4.5k	8.3m	190J	Si△	S464a
92	1N2054	50	250	135C	4.5k§	8.3m	200C	Si	DO9
93	ST8-10	100	250	25A	5.0k		190J	Si	Z27
94	ST9-10	100	250	25A	5.0k		190J	Si	Z28
95	70MA10	100	250	74C	4.0k	10m	150J	Si	S12r
96	SR250L-2R	100	250	105C	4.5k§	8.3m	150J	Si△	M1110
97	SR250L-2S	100	250	105C	4.5k§	8.3m	150J	Si△	M1110
98	70M10	100	250	107B	4.0k	10m	175A	Si	S8n
99	250BC15	100	250	107C	2.0k	10m	175J	Si	S8n
100	A197A	100	250	110C	5.0k	8.3m	175J	Si△	S435a⊠
101	1N4880	100	250	120C	4.0k		150C	Si	DO9
102	J5B3	100	250	122C	4.5k	8.3m	190C	Si	DO9
103	S5310	100	250	122C	4.5k	8.3m	190J	Si△	DO9⊠
104	S5310TS	100	250	122C	4.5k	8.3m	190J	Si△	S464a
105	DF451-01	100	250	125J	3.5k	10m	125J	Si#	M771
106	1N3735	100	250	130C	4.5k	8.3m	200C	Si	DO9⊠
107	1N2055	100	250	135C	4.5k§	8.3m	200C	Si	DO9
108	A190A	100	250	144C	6.5k	8.3m	200J	Si△	S435a⊠
109	70U10	100	250	150C	5.5k	10m	200J	Si	DO9⊠
110	S5315	150	250	122C	4.5k	8.3m	190J	Si△	DO9⊠
111	S5315TS	150	250	122C	4.5k	8.3m	190J	Si△	S464a
112	1N2056	150	250	135C	4.5k§	8.3m	200C	Si	DO9
113	ST8-20	200	250	25A	5.0k		190J	Si	Z27
114	ST9-20	200	250	25A	5.0k		190J	Si	Z28
115	70MA20	200	250	74C	4.0k	10m	150J	Si	S12r
116	SR250L-4R	200	250	105C	4.5k§	8.3m	150J	Si△	M1110
117	SR250L-4S	200	250	105C	4.5k§	8.3m	150J	Si△	M1110
118	70M20	200	250	107B	4.0k	10m	175A	Si	S8n
119	250DC15	200	250	107C	2.0k	10m	175J	Si	S8n
120	A197B	200	250	110C	5.0k	8.3m	175J	Si△	S435a⊠
121	1N3976	200	250	120C	4.0k		150A	Si△	DO9△#
122	J5C3	200	250	122C	4.5k	8.3m	190C	Si	DO9
123	S5320	200	250	122C	4.5k	8.3m	190J	Si△	DO9⊠
124	S5320TS	200	250	122C	4.5k	8.3m	190J	Si△	S464a
125	1N3736	200	250	130C	4.5k	8.3m	200C	Si	DO9⊠
126	1N2057	200	250	135C	4.5k§	8.3m	200C	Si	DO9
127	A190B	200	250	144C	6.5k	8.3m	200J	Si△	S435a⊠
128	70U20	200	250	150C	5.5k	10m	200J	Si	DO9⊠
129	DF451-02	206	250	125J	3.5k	10m	125J	Si#	M771
130	J5D3	250	250	122C	4.5k	8.3m	190C	Si	DO9
131	S5325	250	250	122C	4.5k	8.3m	190J	Si△	DO9⊠
132	S5325TS	250	250	122C	4.5k	8.3m	190J	Si△	S464a
133	1N2058	250	250	135C	4.5k§	8.3m	200C	Si	DO9
134	ST8-30	300	250	25A	5.0k		190J	Si	Z27
135	ST9-30	300	250	25A	5.0k		190J	Si	Z28
136	70MA30	300	250	74C	4.0k	10m	150J	Si	S12r
137	SR250L-6R	300	250	105C	4.5k§	8.3m	150J	Si△	M1110
138	SR250L-6S	300	250	105C	4.5k§	8.3m	150J	Si△	M1110
139	70M30	300	250	107B	4.0k	10m	175A	Si	S8n
140	250FC15	300	250	107C	2.0k	10m	175J	Si	S8n
141	A197C	300	250	110C	5.0k	8.3m	175J	Si△	S435a⊠
142	J5E3	300	250	122C	4.5k	8.3m	190C	Si	DO9
143	S5330	300	250	122C	4.5k	8.3m	190J	Si	DO9⊠
144	S5330TS	300	250	122C	4.5k	8.3m	190J	Si△	S464a
145	1N3737	300	250	130C	4.5k	8.3m	200C	Si	DO9⊠
146	1N2059	300	250	135C	4.5k§	8.3m	200C	Si	DO9
147	A190C	300	250	144C	6.5k	8.3m	200J	Si△	S435a⊠
148	J5F3	350	250	122C	4.5k	8.3m	190C	Si	DO9
149	S5335	350	250	122C	4.5k	8.3m	190J	Si△	DO9⊠
150	S5335TS	350	250	122C	4.5k	8.3m	190J	Si△	S464a
151	1N2060	350	250	135C	4.5k§	8.3m	200C	Si	DO9
152	ST8-40	400	250	25A	5.0k		190J	Si	Z27
153	ST9-40	400	250	25A	5.0k		190J	Si	Z28
154	70MA40	400	250	74C	4.0k	10m	150J	Si	S12r
155	SR250L-8R	400	250	105C	4.5k§	8.3m	150J	Si△	M1110
156	SR250L-8S	400	250	105C	4.5k§	8.3m	150J	Si△	M1110
157	70M40	400	250	107B	4.0k	10m	175A	Si	S8n
158	250GC15	400	250	107C	2.0k	10m	175J	Si	S8n
159	A197D	400	250	110C	5.0k	8.3m	175J	Si△	S435a⊠
160	1N3977	400	250	120C	4.0k		150A	Si△	DO9△#
161	BYX33-400	400	250	120A	4.0k	10m	190J	Si△	M294⊠
162	J5G3	400	250	122C	4.5k	8.3m	190C	Si	DO9
163	S5340	400	250	122C	4.5k	8.3m	190J	Si△	DO9⊠
164	S5340TS	400	250	122C	4.5k	8.3m	190J	Si△	S464a
165	DF451-04	400	250	125J	3.5k	10m	125J	Si#	M771
166	1N3738	400	250	130C	4.5k	8.3m	200C	Si	DO9⊠
167	1N2061	400	250	135C	4.5k§	8.3m	200C	Si	DO9
168	A190D	400	250	144C	6.5k	8.3m	200J	Si△	S435a⊠
169	70U40	400	250	150C	5.5k	10m	200J	Si	DO9⊠
170	S5345	450	250	122C	4.5k	8.3m	190J	Si△	DO9⊠
171	S5345TS	450	250	122C	4.5k	8.3m	190J	Si△	S464a
172	1N2062	450	250	135C	4.5k§	8.3m	200C	Si	DO9
173	ST8-50	500	250	25A	5.0k		190J	Si	Z27
174	ST9-50	500	250	25A	5.0k		190J	Si	Z28
175	251F5S	500	250	50C	4.5k		175J	Si△	S12n
176	SR250L-10R	500	250	105C	4.5k§	8.3m	150J	Si△	M1110
177	SR250L-10S	500	250	105C	4.5k§	8.3m	150J	Si△	M1110
178	70M50	500	250	107B	4.0k	10m	175A	Si	S8n
179	A197E	500	250	110C	5.0k	8.3m	175J	Si△	S435a⊠
180	J5H3	500	250	122C	4.5k	8.3m	190C	Si	DO9
181	S5350	500	250	122C	4.5k	8.3m	190J	Si△	DO9⊠
182	S5350TS	500	250	122C	4.5k	8.3m	190J	Si△	S464a
183	1N3739	500	250	130C	4.5k	8.3m	200C	Si	DO9⊠
184	1N2063	500	250	135C	4.5k§	8.3m	200C	Si	DO9
185	A190E	500	250	144C	6.5k	8.3m	200J	Si△	S435a⊠
186	ST8-60	600	250	25A	5.0k		190J	Si	Z27
187	ST9-60	600	250	25A	5.0k		190J	Si	Z28
188	251F6S	600	250	50C	4.5k		175J	Si△	S12n
189	253PJA60	600	250	73C	2.7k	10m	150J	Si	M1246
190	70MA60	600	250	74C	4.0k	10m	150J	Si	S12r
191	70M60	600	250	107B	4.0k	10m	175A	Si	S8n
192	250JC15	600	250	107C	2.0k	10m	175J	Si	S8n
193	A197M	600	250	110C	5.0k	8.3m	175J	Si△	S435a⊠
194	1N3978	600	250	120C	4.0k		150A	Si	DO9△#
195	J5K3	600	250	122C	4.5k	8.3m	190C	Si	DO9
196	S5360	600	250	122C	4.5k	8.3m	190J	Si△	DO9⊠
197	S5360TS	600	250	122C	4.5k	8.3m	190J	Si△	S464a
198	DF451-06	600	250	125J	3.5k	10m	125J	Si#	M771
199	1N3740	600	250	130C	4.5k	8.3m	200C	Si	DO9⊠
200	1N2064	600	250	135C	4.5k§	8.3m	200C	Si	DO9
201	A190M	600	250	144C	6.5k	8.3m	200J	Si△	S435a⊠
202	70U60	600	250	150C	5.5k	10m	200J	Si	DO9⊠
203	A197S	700	250	110C	5.0k	8.3m	175J	Si△	S435a⊠
204	J5M3	700	250	122C	4.5k	8.3m	190C	Si	DO9
205	S5370	700	250	122C	4.5k	8.3m	190J	Si△	DO9⊠
206	S5370TS	700	250	122C	4.5k	8.3m	190J	Si△	S464a
207	1N2065	700	250	135C	4.5k§	8.3m	200C	Si	DO9
208	A190S	700	250	144C	6.5k	8.3m	200J	Si△	S435a⊠
209	251F8S	800	250	50C	4.5k		175J	Si△	S12n
210	DFS250A8	800	250	54C	5.0k	10m	125J	Si	M568⊠
211	253PJA80	800	250	73C	2.7k	10m	150J	Si	M1246
212	70MA80	800	250	74C	4.0k	10m	150J	Si	S12r
213▼	D251NR800E	800	250	100C	5.5k§	10m	180J	Si	M1348
214▼	D251NR800V	800	250	100C	5.5k§	10m	180J	Si	S532b
215	70M80	800	250	107B	4.0k	10m	175A	Si	S8n
216	250LC15	800	250	107C	2.0k	10m	175J	Si	S8n
217	A197N	800	250	110C	5.0k	8.3m	175J	Si△	S435a⊠
218	1N3979	800	250	120C	4.0k		150A	Si△	M294⊠
219	BYX33-800	800	250	120A	4.0k	10m	190J	Si△	M294⊠
220	J5N3	800	250	122C	4.5k	8.3m	190C	Si	DO9

SYMBOLS AND CODES EXPLAINED IN INTERPRETER

5. GENERAL-PURPOSE RECTIFIERS - $I_o \geq 200$ A (Cont'd)

IN ORDER OF: (1) IO MAX (2) PIV (3) ° TEMP & (4) TYPE NMBER

LINE No.	4 TYPE NUMBER	2 PIV (V)	MAX AVG FWD DC CURRENT 1 Io MAX (A)	3 @ TEMP (°C)	MAX RATING SURGE CURR PEAK 1 Cy (A)	PULSE WIDTH (s)	MAX. TEMP (°C)	MAT	DRAWING No.
1	S5380	800	250	122C	4.5k	8.3m	190J	Si△	DO9⊠
2	S5380TS	800	250	122C	4.5k	8.3m	190J	Si△	S464a
3	DF451-08	800	250	125J	3.5k	10m	125J	Si#	M771
4	1N3741	800	250	130C	4.5k	8.3m	200C	Si	DO9⊠
5♦	D251N800B	800	250	130C	6.0k§	10m	180J	Si	S532b
6▼	D251N800E	800	250	130C	6.0k§	10m	180J	Si	M1348
7▼	D251N800V	800	250	130C	6.0k§	10m	180J	Si	S532b
8	1N2066	800	250	135C	4.5k§	8.3m	200C	Si	DO9
9	A190N	800	250	144C	6.5k	8.3m	200J	Si△	S435a⊠
10	70U80	800	250	150C	5.5k	10m	200J	Si	DO9⊠
11	A197T	900	250	110C	5.0k	8.3m	175J	Si△	S435a⊠
12	S5390	900	250	122C	4.5k	8.3m	190J	Si△	DO9⊠
13	S5390TS	900	250	122C	4.5k	8.3m	190J	Si△	S464a
14	1N2067	900	250	135C	4.5k§	8.3m	200C	Si	DO9
15	A190T	900	250	144C	6.5k	8.3m	200J	Si△	S435a⊠
16	D240R200B	200	255	121C	4.7k	10m	175J	Si	S433⊠
17	D240R400B	400	255	121C	4.7k	10m	175J	Si	S433⊠
18	D240R600B	600	255	121C	4.7k	10m	175J	Si	S433⊠
19	D240R700B	700	255	121C	4.7k	10m	175J	Si	S433⊠
20	DF252-02	200	270	150J	3.0k	10m	150J	Si#	M771
21	DF252-04	400	270	150J	3.0k	10m	150J	Si#	M771
22	DF252-06	600	270	150J	3.0k	10m	150J	Si#	M771
23	DF252-08	800	270	150J	3.0k	10m	150J	Si#	M771
24	1N4044	50	275	120C	5.0k		190J	Si	DO9⊠
25	1N4045	100	275	120C	5.0k		190J	Si	DO9⊠
26	1N4046	150	275	120C	5.0k		190J	Si	DO9⊠
27	1N4047	200	275	120C	5.0k		190J	Si	DO9⊠
28	1N4048	250	275	120C	5.0k		190J	Si	DO9⊠
29	1N4049	300	275	120C	5.0k		190J	Si	DO9⊠
30	1N4050	400	275	120C	5.0k		190J	Si	DO9⊠
31	A399E	500	275	80C	6.0k		150J	Si	M1147
32	1N4051	500	275	120C	5.0k		190J	Si	DO9⊠
33	A399M	600	275	80C	6.0k		150J	Si	M1147
34	1N4052	600	275	120C	5.0k		190J	Si	DO9⊠
35	A399S	700	275	80C	6.0k		150J	Si	M1147
36	1N4053	700	275	120C	5.0k		190J	Si	DO9⊠
37	A399N	800	275	80C	6.0k		150J	Si	M1147
38	1N4054	800	275	120C	5.0k		190J	Si	DO9⊠
39	A399T	900	275	80C	6.0k		150J	Si	M1147
40	1N4055	900	275	120C	5.0k		190J	Si	DO9⊠
41	DS290-08J	800	290	100C	4.7k§		150J	Si	S506⊠
42	SSiK2825	400	296	136C	2.7k	10m	180J	Si*	M851
43	SSiK2840	700	296	136C	2.7k	10m	180J	Si*	M851
44	300U5A	50	300	120C	5.0k§	8.3m	200J	Si*	DO9⊠
45	302U5A	50	300	120C	5.5k	6.0m	200J	Si	S552
46	S50405	50	300	132C	5.0k	8.3m	190J	Si△	DO9⊠
47	S50405TS	50	300	132C	5.0k	8.3m	190J	Si△	S464a
48	300U10A	100	300	120C	5.0k§	8.3m	200J	Si*	DO9⊠
49	302U10A	100	300	120C	5.0k	8.3m	200C	Si	DO9
50	S50410	100	300	132C	5.0k	8.3m	190J	Si△	DO9⊠
51	S50410TS	100	300	132C	5.0k	8.3m	190J	Si△	S464a
52	R620013000	100	300	142C	5.5k	8.3m	190J	Si	C242
53	300U15A	150	300	120C	5.0k§	8.3m	200J	Si*	DO9⊠
54	302U15A	150	300	120C	5.0k	8.3m	200C	Si	DO9
55	S50415	150	300	132C	5.0k	8.3m	190J	Si△	DO9⊠
56	S50415TS	150	300	132C	5.0k	8.3m	190J	Si△	S464a
57	TV3002	200	300	110C	6.0k	10m	180J	Si	DO9
58	300U20A	200	300	120C	5.0k§	8.3m	200J	Si*	DO9⊠
59	302U20A	200	300	120C	5.0k	8.3m	200C	Si	DO9
60	S50420	200	300	132C	5.0k	8.3m	190J	Si△	DO9⊠
61	S50420TS	200	300	132C	5.0k	8.3m	190J	Si△	S464a
62	R620023000	200	300	142C	5.5k	8.3m	190J	Si	C242
63	300U25A	250	300	120C	5.0k§	8.3m	200J	Si*	DO9⊠
64	302U25A	250	300	120C	5.0k	8.3m	200C	Si	DO9
65	S50425	250	300	132C	5.0k	8.3m	190J	Si△	DO9⊠
66	S50425TS	250	300	132C	5.0k	8.3m	190J	Si△	S464a
67	R7000303	300	300	79	7.0k		190	Si	S426⊠
68	300U30A	300	300	120C	5.0k§	8.3m	200J	Si*	DO9⊠
69	302U30A	300	300	120C	5.0k	8.3m	200C	Si	DO9
70	S50430	300	300	132C	5.0k	8.3m	190J	Si△	DO9⊠
71	S50430TS	300	300	132C	5.0k	8.3m	190J	Si△	S464a
72	S50435	350	300	132C	5.0k	8.3m	190J	Si△	DO9⊠
73	S50435TS	350	300	132C	5.0k	8.3m	190J	Si△	S464a
74	D250/400E	400	300	85C	5.3k	10m	150J	Si	M486
75	TV3004	400	300	110C	6.0k	10m	180J	Si	DO9
76	300U40A	400	300	120C	5.0k§	8.3m	200J	Si*	DO9⊠
77	302U40A	400	300	120C	5.0k	8.3m	200C	Si	DO9
78	S50440	400	300	132C	5.0k	8.3m	190J	Si△	DO9⊠
79	S50440TS	400	300	132C	5.0k	8.3m	190J	Si△	S464a
80	R620043000	400	300	142C	5.5k	8.3m	190J	Si	C242
81	R6220430PS00	400	300	150J	3.5k	5.0m	150J	Si	C242
82	S50445	450	300	132C	5.0k	8.3m	190J	Si△	DO9⊠
83	S50445TS	450	300	132C	5.0k	8.3m	190J	Si△	S464a
84	R7000503	500	300	79	7.0k		190	Si	S426⊠
85	300U50A	500	300	120C	5.0k§	8.3m	200J	Si*	DO9⊠
86	302U50A	500	300	120C	5.0k	8.3m	200C	Si	DO9
87	S50450	500	300	132C	5.0k	8.3m	190J	Si△	DO9⊠
88	S50450TS	500	300	132C	5.0k	8.3m	190J	Si△	S464a
89	H01G	600	300	78C	5.5k	10m	150J	Si	S516
90	TV3006	600	300	110C	6.0k	10m	180J	Si	DO9
91	300U60A	600	300	120C	5.0k§	8.3m	200J	Si*	DO9⊠
92	302U60A	600	300	120C	5.0k	8.3m	200C	Si	DO9
93	S50460	600	300	132C	5.0k	8.3m	190J	Si△	DO9⊠
94	S50460TS	600	300	132C	5.0k	8.3m	190J	Si△	S464a
95	R620063000	600	300	142C	5.5k	8.3m	190J	Si	C242
96	R6220630PS00	600	300	150J	3.5k	5.0m	150J	Si	C242
97	R7000703	700	300	79	7.0k		190	Si	S426⊠
98	D300-700	700	300	100C	6.1k	10m	150J	Si	M486a%⊠
99	300U70A	700	300	120C	5.0k§	8.3m	200J	Si*	DO9⊠
100	302U70A	700	300	120C	5.0k	8.3m	200C	Si	DO9
101	S50470	700	300	132C	5.0k	8.3m	190J	Si△	DO9⊠
102	S50470TS	700	300	132C	5.0k	8.3m	190J	Si△	S464a
103	R6220730PS00	700	300	150J	3.5k	5.0m	150J	Si	C242
104	H01J	800	300	78C	5.5k	10m	150J	Si	S516
105	DSS300A8	800	300	79C	6.0k	10m	150J	Si	S568⊠
106	D250/800E	800	300	85C	5.3k	10m	150J	Si	M486
107	TV3008	800	300	110C	6.0k	10m	180J	Si	DO9
108	300U80A	800	300	120C	5.0k§	8.3m	200J	Si*	DO9⊠
109	301U80	800	300	120C	6.2k	8.3m	200J	Si	DO9⊠
110	302U80A	800	300	120C	5.0k	8.3m	200C	Si	DO9
111	303U80	800	300	120C	5.9k	6.0m	200J	Si	S551
112	309U80	800	300	120C	5.9k	6.0m	200J	Si	S467
113	S50480	800	300	132C	5.0k	8.3m	190J	Si△	DO9⊠
114	S50480TS	800	300	132C	5.0k	8.3m	190J	Si△	S464a
115	R620083000	800	300	142C	5.5k	8.3m	190J	Si	C242
116	R6220830PS00	800	300	150J	3.5k	5.0m	150J	Si	C242
117	R7000903	900	300	79	7.0k		190	Si	S426⊠
118	300U90A	900	300	120C	5.0k§	8.3m	200J	Si*	DO9⊠
119	302U90A	900	300	120C	5.0k	8.3m	200C	Si	DO9
120	S50490	900	300	132C	5.0k	8.3m	190J	Si△	DO9⊠
121	S50490TS	900	300	132C	5.0k	8.3m	190J	Si△	S464a
122	R6220930PS00	900	300	150J	3.5k	5.0m	150J	Si	C242
123	SKN240/02	200	320	100C	5.0k	10m	180J	Si	DO9
124	SKR240/02	200	320	100C	5.0k	10m	180J	Si	DO9
125	SKN240/04	400	320	100C	5.0k	10m	180J	Si	DO9
126	SKR240/04	400	320	100C	5.0k	10m	180J	Si	DO9
127	SKR320/04	400	320	125C	8.0k	10m	180A	Si	S171p
128	S30N600JA4	500	320	100C	4.5k§	10m	175J	Si△	M378
129	S30N700JA4	600	320	100C	4.5k§	10m	175J	Si△	M378
130	S30N800JA4	700	320	100C	4.5k§	10m	175J	Si△	M378
131	S30N900JA4	800	320	100C	4.5k§	10m	175J	Si△	M378
132	SKN240/08	800	320	100C	5.0k	10m	180J	Si	DO9
133	SKR240/08	800	320	100C	5.0k	10m	180J	Si	DO9
134	SKR320/08	800	320	125C	8.0k	10m	180A	Si	S171p
135	S30N1000JA4	900	320	100C	4.5k§	10m	175J	Si△	M378
136	A387P	1.0	340	60C	4.0k		150J	Si	M1147
137	A387PA	1.1	340	60C	4.0k		150J	Si	M1147
138	A387PB	1.2	340	60C	4.0k		150J	Si	M1147
139	A387A	100	340	60C	4.0k		150J	Si	M1147
140	A387B	200	340	60C	4.0k		150J	Si	M1147
141	A387C	300	340	60C	4.0k		150J	Si	M1147
142	A387D	400	340	60C	4.0k		150J	Si	M1147
143	A387E	500	340	60C	4.0k		150J	Si	M1147
144	A387M	600	340	60C	4.0k		150J	Si	M1147
145	A387S	700	340	60C	4.0k		150J	Si	M1147
146	A387N	800	340	60C	4.0k		150J	Si	M1147
147	A387T	900	340	60C	4.0k		150J	Si	M1147
148	ST20-10	100	350	25A	7.0k		175J	Si	S203c⊠
149	ST20-20	200	350	25A	7.0k		175J	Si	S203c⊠
150	ST20-40	400	350	25A	7.0k		175J	Si	S203c⊠
151	ST20-60	600	350	25A	7.0k		175J	Si	S203c⊠
152	ST20-80	800	350	25A	7.0k		175J	Si	S203c⊠
153	300LD13	800	350	82C	6.5k	10m	150J	Si	S531
154	DN262-02	200	360	175J	4.0k	10m	175J	Si#	M771
155	DN262-04	400	360	175J	4.0k	10m	175J	Si#	M771
156	DN262-06	600	360	175J	4.0k	10m	175J	Si#	M771
157	DN262-08	800	360	175J	4.0k	10m	175J	Si#	M771
158▼	SD300N02M	200	380	100C	6.0k	10m	180J	Si	S506c
159▼	SD300N02P	200	380	100C	6.0k	10m	180J	Si	S506c
160▼	SD300R02M	200	380	100C	6.0k	10m	180J	Si	S506c
161▼	SD300R02P	200	380	100C	6.0k	10m	180J	Si	S506c
162	SW02HHN300	200	380	100C	55k§	10m	180J	Si	M1155⊠
163	SW02PHN300	200	380	100C	5.5k§	10m	180J	Si	M1155⊠
164▼	SD300N04M	400	380	100C	6.0k	10m	180J	Si	S506c
165▼	SD300N04P	400	380	100C	6.0k	10m	180J	Si	S506c
166▼	SD300R04M	400	380	100C	6.0k	10m	180J	Si	S506c
167▼	SD300R04P	400	380	100C	6.0k	10m	180J	Si	S506c
168	SW04HHN300	400	380	100C	55k§	10m	180J	Si	M1155⊠
169	SW04PHN300	400	380	100C	5.5k§	10m	180J	Si	DO5⊠
170	DS390-06J	600	380	100C	4.7k§	10m	175J	Si	S506g
171▼	SD300N06M	600	380	100C	6.0k	10m	180J	Si	S506c
172▼	SD300N06P	600	380	100C	6.0k	10m	180J	Si	S506c
173▼	SD300R06M	600	380	100C	6.0k	10m	180J	Si	S506c
174▼	SD300R06P	600	380	100C	6.0k	10m	180J	Si	S506c
175	SW06HHN300	600	380	100C	55k§	10m	180J	Si	M1155⊠
176	SW06PHN300	600	380	100C	5.5k§	10m	180J	Si	M1155⊠
177	DS390-08J	800	380	100C	4.7k§	10m	175J	Si	S506g
178▼	SD300N08M	800	380	100C	6.0k	10m	180J	Si	S506c
179▼	SD300N08P	800	380	100C	6.0k	10m	180J	Si	S506c
180▼	SD300R08M	800	380	100C	6.0k	10m	180J	Si	S506c
181▼	SD300R08P	800	380	100C	6.0k	10m	180J	Si	S506c
182	SW08HHN300	800	380	100C	55k§	10m	180J	Si	M1155⊠
183	SW08PHN300	800	380	100C	5.5k§	10m	180J	Si	DO5⊠
184	SSiL3983A		386	109	7.2k		180J	Si△	SW345
185	SSiL3825	400	386	109	7.2k	10m	180	Si△	S345
186	SSiL3925	400	386	109	7.2k		180J	Si△	SW345
187	SSiL3840	700	386	109	7.2k	10m	180	Si△	S345
188	SSiL3940	700	386	109	7.2k		180J	Si△	SW345
189	DS390-04	400	390	100C	4.7k§	10m	175J	Si	S506g
190	1N3585	50	400	120C			190J	Si	S83a△
191	A397A	100	400	110	5.0k	8.3m	175	Si△	M771
192	NLA397A	100	400	110C	5.0k	8.3m	125J	Si	C242a
193	1N3586	100	400	120C			190J	Si	S83a△
194	R620014000	100	400	128C	6.0k	8.3m	190J	Si	C242
195	A390A	100	400	145	7.0k	8.3m	200J	Si△	M771
196	NLA390A	100	400	145C	7.0k		200J	Si	C242a
197	A397B	200	400	110	5.0k	8.3m	175	Si△	M771
198	NLA397B	200	400	110C	5.0k	8.3m	125J	Si	C242a
199	1N1479	200	400	120C	8.0k		190J	Si	M56b△
200	1N3587	200	400	120C			190J	Si	S83a△
201▼	SD400N02M	200	400	120C	8.2k	10m	190J	Si	S506c
202▼	SD400N02P	200	400	120C	8.2k	10m	190J	Si	S506c
203▼	SD400R02M	200	400	120C	8.2k	10m	190J	Si	S506c
204▼	SD400R02P	200	400	120C	8.2k	10m	190J	Si	S506c
205	SW02HHN400	200	400	120C	7.5k§	10m	190J	Si	M1155⊠
206	SW02PHN400	200	400	120C	7.5k§	10m	190J	Si	M1155⊠
207	R620024000	200	400	128C	6.0k	8.3m	190J	Si	C242
208	A390B	200	400	145	7.0k	8.3m	200J	Si△	M771
209	NLA390B	200	400	145C	7.0k		200J	Si	C242a
210	DF452-02	200	400	150J	5.0k	10m	150J	Si#	M771
211	A397C	300	400	110	5.0k	8.3m	175	Si△	M771
212	NLA397C	300	400	110C	5.0k	8.3m	125J	Si	C242a
213	1N3588	300	400	120C			190J	Si	S83a△
214	A390C	300	400	145	7.0k	8.3m	200J	Si△	M771
215	NLA390C	300	400	145C	7.0k		200J	Si	C242a
216	MR1245FL	300	400	150C	8.0k	8.3m	190J	Si	M228a⊠
217	MR1245SL	300	400	150C	8.0k	8.3m	190J	Si	S87d⊠
218	A397D	400	400	110	5.0k	8.3m	175	Si△	M771
219	NLA397D	400	400	110C	5.0k	8.3m	125J	Si	C242a
220	1N1481	400	400	120C	8.0k		190J	Si	M56b

SYMBOLS AND CODES EXPLAINED IN INTERPRETER

5. GENERAL-PURPOSE RECTIFIERS - $I_O \geq 200$ A (Cont'd)

IN ORDER OF: (1) IO MAX (2) PIV
(3) ° TEMP & (4) TYPE NMBER

LINE No.	4 TYPE NUMBER	2 PIV (V)	MAX AVG FWD DC CURRENT 1 Io MAX (A)	3 @ TEMP (°C)	MAX RATING SURGE CURR PEAK 1 Cy (A)	PULSE WIDTH (s)	MAX. TEMP (°C)	MAT	DRAWING No.
1	1N3589	400	400	120C			190J	Si	S83a△
2▼	SD400N04M	400	400	120C	8.2k	10m	190J	Si	S506c
3▼	SD400N04P	400	400	120C	8.2k	10m	190J	Si	S506c
4▼	SD400R04M	400	400	120C	8.2k	10m	190J	Si	S506c
5▼	SD400R04P	400	400	120C	8.2k	10m	190J	Si	S506c
6	SW04HHN400	400	400	120C	7.5k§	10m	190J	Si	M1155⊠
7	SW04PHN400	400	400	120C	7.5k§	10m	190J	Si	M1155⊠
8	R620044000	400	400	128C	6.0k	8.3m	190J	Si	C242
9	A390D	400	400	145	7.0k	8.3m	200J	Si△	M771
10	NLA390D	400	400	145C	7.0k		200J	Si	C242a
11	DF452-04	400	400	150J	5.0k	10m	150J	Si#	M771
12	A397E	500	400	110	5.0k	8.3m	175	Si△	M771
13	NLA397E	500	400	110C	5.0k	8.3m	125J	Si	C242a
14	1N3590	500	400	120C			190J	Si	S83a△
15	SR400EL-10	500	400	128C	10k§	8.3m	175J	Si△	S502
16	A390E	500	400	145	7.0k	8.3m	200J	Si△	M771
17	NLA390E	500	400	145C	7.0k		200J	Si	C242a
18	403PJA60	600	400	76C	4.0k	10m	150J	Si	M1246a
19	FD400DL12	600	400	98C	10k§	8.3m	150J	Si△	C248zc
20	A397M	600	400	110	5.0k	8.3m	175	Si△	M771
21	NLA397M	600	400	110C	5.0k	8.3m	125J	Si	C242a
22	1N3591	600	400	120C			190J	Si	S83a△
23▼	SD400N06M	600	400	120C	8.2k	10m	190J	Si	S506c
24▼	SD400N06P	600	400	120C	8.2k	10m	190J	Si	S506c
25▼	SD400R06M	600	400	120C	8.2k	10m	190J	Si	S506c
26▼	SD400R06P	600	400	120C	8.2k	10m	190J	Si	S506c
27	SW06HHN400	600	400	120C	7.5k§	10m	190J	Si	M1155⊠
28	SW06PHN400	600	400	120C	7.5k§	10m	190J	Si	M1155⊠
29	R620064000	600	400	128C	6.0k	8.3m	190J	Si	C242
30	SR400EL-12	600	400	128C	10k§	8.3m	175J	Si△	S502
31	A390M	600	400	145	7.0k	8.3m	200J	Si△	M771
32	NLA390M	600	400	145C	7.0k		200J	Si	C242a
33	DF452-06	600	400	150J	5.0k	10m	150J	Si#	M771
34	MR1249FL	600	400	150C	8.0k	8.3m	190J	Si	M228a⊠
35	MR1249SL	600	400	150C	8.0k	8.3m	190J	Si	S87d⊠
36	A397S	700	400	110	5.0k	8.3m	175	Si△	M771
37	NLA397S	700	400	110C	5.0k	8.3m	125J	Si	C242a
38	A390S	700	400	145	7.0k	8.3m	200J	Si△	M771
39	NLA390S	700	400	145C	7.0k		200J	Si	C242a
40	403PJA80	800	400	76C	4.0k	10m	150J	Si	M1246a
41	FD400DL16	800	400	98C	10k§	8.3m	150J	Si△	C248zc
42	A397N	800	400	110	5.0k	8.3m	175	Si△	M771
43	NLA397N	800	400	110C	5.0k	8.3m	125J	Si	C242a
44▼	SD400N08M	800	400	120C	8.2k	10m	190J	Si	S506c
45▼	SD400N08P	800	400	120C	8.2k	10m	190J	Si	S506c
46▼	SD400R08M	800	400	120C	8.2k	10m	190J	Si	S506c
47▼	SD400R08P	800	400	120C	8.2k	10m	190J	Si	S506c
48	SW08HHN400	800	400	120C	7.5k§	10m	190J	Si	M1155⊠
49	SW08PHN400	800	400	120C	7.5k§	10m	190J	Si	M1155⊠
50	R620084000	800	400	128C	6.0k	8.3m	190J	Si	C242
51	SR400EL-16	800	400	128C	10k§	8.3m	175J	Si△	S502
52	A390N	800	400	145	7.0k	8.3m	200J	Si△	M771
53	NLA390N	800	400	145C	7.0k		200J	Si	C242a
54	DF452-08	800	400	150J	5.0k	10m	150J	Si#	M771
55	A397T	900	400	110	5.0k	8.3m	175	Si△	M771
56	NLA397T	900	400	110C	5.0k	8.3m	125J	Si	C242a
57	A390T	900	400	145	7.0k	8.3m	200J	Si△	M771
58	NLA390T	900	400	145C	7.0k		200J	Si	C242a
59	SKN320/02	200	420	100C	8.0k	10m	180J	Si	S510
60	SKR320/02	200	420	100C	8.0k	10m	180J	Si	DO9
61	SKN320/04	400	420	100C	8.0k	10m	180J	Si	S510
62	SKN320/08	800	420	100C	8.0k	10m	180J	Si	S510
63	FD600-1	100	430	150J	5.5k	8.3m	190J	Si	M637a
64	FD600-2	200	430	150J	5.5k	8.3m	190J	Si	M637a
65	FD600-3	300	430	150J	5.5k	8.3m	190J	Si	M637a
66	DS430-04J	400	430	100C	8.4k		150J	Si	S506b
67	FD600-4	400	430	150J	5.5k	8.3m	190J	Si	M637a
68	FD600-5	500	430	150J	5.5k	8.3m	190J	Si	M637a
69	DS430-06J	600	430	100C	8.4k		150J	Si	S506b
70	FD600-6	600	430	150J	5.5k	8.3m	190J	Si	M637a
71	FD600-7	700	430	150J	5.5k	8.3m	190J	Si	M637a
72▼	D428N800	800	430	100C	7.3k§	10m	150J	Si	M1346
73	DS430-08J	800	430	100C	8.4k		150J	Si	S506b
74	FD600-8	800	430	150J	5.5k	8.3m	190J	Si	M637a
75	FD600-9	900	430	150J	5.5k	8.3m	190J	Si	M637a
76	R7000304	300	450	102	8.5k		190	Si	S426⊠
77	DS390-04J	400	450	80C	5.5k	10m	175J	Si	
78▼	D448N400	400	450	120C	6.1k§	10m	180J	Si	M1346
79▼	D452N400	400	450	130C	13k§	10m	180J	Si	M1347
80▼	D452NR400	400	450	130C	13k§	10m	180J	Si	M1347
81	R7000504	500	450	102	8.5k		190	Si	S426⊠
82▼	D448N600	600	450	120C	6.1k§	10m	180J	Si	M1346
83	R7000704	700	450	102	8.5k		190	Si	S426⊠
84▼	D448N700	700	450	120C	6.1k§	10m	180J	Si	M1346
85▼	D448N800	800	450	120C	6.1k§	10m	180J	Si	M1346
86▼	D452N800	800	450	130C	13k§	10m	180J	Si	M1347
87▼	D452NR800	800	450	130C	13k§	10m	180J	Si	M1347
88	R7000904	900	450	102	8.5k		190	Si	S426⊠
89	470PDA10	100	470	90C	6.8k	8.3m	200J	Si	E200a
90	470PDA20	200	470	90C	6.8k	8.3m	200J	Si	E200a
91	470PDA40	400	470	90C	6.8k	8.3m	200J	Si	E200a
92	470PDA60	600	470	90C	6.8k	8.3m	200J	Si	E200a
93	S30N500JA4	400	490	100C	4.5k§	10m	175J	Si△	M378

$I_O \geq 500$ A

LINE No.	4 TYPE NUMBER	2 PIV (V)	MAX AVG FWD DC CURRENT 1 Io MAX (A)	3 @ TEMP (°C)	MAX RATING SURGE CURR PEAK 1 Cy (A)	PULSE WIDTH (s)	MAX. TEMP (°C)	MAT	DRAWING No.
97	G500R2	24	500	25C	12k		110J	Ge	DO200A
98	500V5A	50	500	125C	10k§	8.3m	200J	Si*	S422a
99	502V5A	50	500	125C	10k§	8.3m	200J	Si*	S464b
100	DS402ST01	100	500	55C	4.5k§	10m	175C	Si	C248
101	R620015000	100	500	112C	6.5k	8.3m	190J	Si	C242
102	500V10A	100	500	125C	10k§	8.3m	200J	Si*	S422a
103	502V10A	100	500	125C	10k§	8.3m	200J	Si*	S464b
104	DS402ST02	200	500	55C	4.5k§	10m	175C	Si	C248
105	R620025000	200	500	112C	6.5k	8.3m	190J	Si	C242
106	500V20A	200	500	125C	10k§	8.3m	200J	Si*	S422a
107	502V20A	200	500	125C	10k§	8.3m	200J	Si*	S464b
108	500V30A	300	500	125C	10k§	8.3m	200J	Si*	S422a
109	502V30A	300	500	125C	10k§	8.3m	200J	Si*	S464b
110	DS402ST04	400	500	55C	4.5k§	10m	175C	Si	C248
111	R620045000	400	500	112C	6.5k	8.3m	190J	Si	C242
112	500V40A	400	500	125C	10k§	8.3m	200J	Si*	S422a
113	502V40A	400	500	125C	10k§	8.3m	200J	Si*	S464b
114	DS402ST05	500	500	55C	4.5k§	10m	175C	Si	C248
115	500V50A	500	500	125C	10k§	8.3m	200J	Si*	S422a
116	502V50A	500	500	125C	10k§	8.3m	200J	Si*	S464b
117	DS402ST06	600	500	55C	4.5k§	10m	175C	Si	C248
118	501V60	600	500	105C	7.5k§	8.3m	200J	Si△	S120g⊠
119	501VF60B	600	500	105C	10k	8.3m	200J	Si	S525
120	503V60	600	500	105C	8.0k		200J	Si	S563
121	R620065000	600	500	112C	6.5k	8.3m	190J	Si	C242
122	501V60B	600	500	120C	10k§	8.3m	200J	Si△	S120g⊠
123	503V60B	600	500	120C	10k		200J	Si	S563
124	500V60A	600	500	125C	10k§	8.3m	200J	Si*	S422a
125	502V60A	600	500	125C	10k§	8.3m	200J	Si*	S464b
126	701F6S	600	500	130	9.0k		175J	Si△	S12b
127	501VR60B	600	500	135C	10k§	8.3m	200J	Si△	S120g⊠
128	DS402ST07	700	500	55C	4.5k§	10m	175C	Si	C248
129	DS402ST08	800	500	55C	4.5k§	10m	175C	Si	C248
130	501V80	800	500	105C	7.5k§	8.3m	200J	Si△	S120g⊠
131	501VF80B	800	500	105C	10k	8.3m	200J	Si	S525
132	503V80	800	500	105C	8.0k		200J	Si	S563
133	R620085000	800	500	112C	6.5k	8.3m	190J	Si	C242
134	501V80B	800	500	120C	10k§	8.3m	200J	Si△	S120g⊠
135	503V80B	800	500	120C	10k		200J	Si	S563
136	701F8S	800	500	130	9.0k		175J	Si△	S12b
137	501VR80B	800	500	135C	10k§	8.3m	200J	Si△	S120g⊠
138	DS402ST09	900	500	55C	4.5k§	10m	175C	Si	C248
139	DN462-02	200	540	175J	6.0k	10m	175J	Si#	M771
140	DN462-04	400	540	175J	6.0k	10m	175J	Si#	M771
141	DN462-06	600	540	175J	6.0k	10m	175J	Si#	M771
142	DN462-08	800	540	175J	6.0k	10m	175J	Si#	M771
143	R7000305	300	550	113	10k		190	Si	S426⊠
144	R7000505	500	550	113	10k		190	Si	S426⊠
145	R7000705	700	550	113	10k		190	Si	S426⊠
146	R7000905	900	550	113	10k		190	Si	S426⊠
147	AR402P01	100	575	55H	4.5k§	10m	175J	Si△	M1136§%
148	AR402S01	100	575	55H	4.5k§	10m	175J	Si△	M1136♦%
149	AR402P02	200	575	55H	4.5k§	10m	175J	Si△	M1136§%
150	AR402S02	200	575	55H	4.5k§	10m	175J	Si△	M1136♦%
151	AR402P03	300	575	55H	4.5k§	10m	175J	Si△	M1136§%
152	AR402S03	300	575	55H	4.5k§	10m	175J	Si△	M1136♦%
153	AR402P04	400	575	55H	4.5k§	10m	175J	Si△	M1136§%
154	AR402S04	400	575	55H	4.5k§	10m	175J	Si△	M1136♦%
155	AR402P05	500	575	55H	4.5k§	10m	175J	Si△	M1136§%
156	AR402S05	500	575	55H	4.5k§	10m	175J	Si△	M1136♦%
157	AR402P06	600	575	55H	4.5k§	10m	175J	Si△	M1136§%
158	AR402S06	600	575	55H	4.5k§	10m	175J	Si△	M1136♦%
159	AR402P07	700	575	55H	4.5k§	10m	175J	Si△	M1136§%
160	AR402S07	700	575	55H	4.5k§	10m	175J	Si△	M1136♦%
161	AR402P08	800	575	55H	4.5k§	10m	175J	Si△	M1136§%
162	AR402S08	800	575	55H	4.5k§	10m	175J	Si△	M1136♦%
163	AR402P09	900	575	55H	4.5k§	10m	175J	Si△	M1136§%
164	AR402S09	900	575	55H	4.5k§	10m	175J	Si△	M1136♦%
165	SSiN31100A		580	121	9.4k		180J	Si△	S12a
166	SSiN31120A		580	121	9.4k		180J	Si△	S12a
167	A437A	100	600	55C	10k	8.3m	125J	Si△	C246b
168	R720010600	100	600	136C	7.0k	8.3m	200J	Si	C246f
169	A437B	200	600	55C	10k	8.3m	125J	Si△	C246b
170	R720020600	200	600	136C	7.0k	8.3m	200J	Si	C246f
171	DF652-02	200	600	150J	9.0k	10m	150J	Si#	M1337
172	A437C	300	600	55C	10k	8.3m	125J	Si△	C246b
173	R720030600	300	600	100	7.0k	8.3m	200J	Si	C246
174	A437D	400	600	55C	10k	8.3m	125J	Si△	C246b
175	R720040600	400	600	136C	7.0k	8.3m	200J	Si	C246f
176	DF652-04	400	600	150J	9.0k	10m	150J	Si#	M1337
177	1S2247	500	600	93C	10k§	8.3m	150J	Si△	C240b
178	R720050600	500	600	100	7.0k	8.3m	200J	Si	C246
179	1S2248	600	600	93C	10k§	8.3m	150J	Si△	C240b
180	R720060600	600	600	136C	7.0k	8.3m	200J	Si	C246f
181	DF652-06	600	600	150J	9.0k	10m	150J	Si#	M1337
182	FD500E16	800	600	90C	10k§	8.3m	150J	Si△	C240d
183	1S2249	800	600	93C	10k§	8.3m	150J	Si△	C240b
184	R720080600	800	600	136C	7.0k	8.3m	200J	Si	C246f
185	DF652-08	800	600	150J	9.0k	10m	150J	Si#	M1337
186	GD800-1	100	640	150J	8.0k	8.3m	150J	Si	M637
187	GD800-2	200	640	150J	8.0k	8.3m	150J	Si	M637
188	GD800-3	300	640	150J	8.0k	8.3m	150J	Si	M637
189	GD800-4	400	640	150J	8.0k	8.3m	150J	Si	M637
190	GD800-5	500	640	150J	8.0k	8.3m	150J	Si	M637
191	GD800-6	600	640	150J	8.0k	8.3m	150J	Si	M637
192	GD800-7	700	640	150J	8.0k	8.3m	150J	Si	M637
193	GD800-8	800	640	150J	8.0k	8.3m	150J	Si	M637
194	GD800-9	900	640	150J	8.0k	8.3m	150J	Si	M637
195▼	SD300C02C	200	650	55	6.0k	10m	180J	Si	DO200AA
196	MR1265FL	300	650	150C	12k	8.3m	190J	Si	M228c⊠
197▼	SD300C04C	400	650	55	6.0k	10m	180J	Si	DO200AA
198▼	SD300C06C	600	650	55	6.0k	10m	180J	Si	DO200AA
199	MR1269FL	600	650	150C	12k	8.3m	190J	Si	M228c⊠
200▼	SD300C08C	800	650	55	6.0k	10m	180J	Si	DO200AA
201	SSiL2825	400	665	115C	7.2k	10m	180J	Si△	M851
202	SSiL2840	700	665	115C	7.2k	10m	180J	Si△	M851
203	SKN500/02	200	700	100C	7.0k	10m	180J	Si	C242b
204	SKN500/04	400	700	100C	7.0k	10m	180J	Si	C242b
205	703PJA60	600	700	83C	9.0k	10m	150J	Si	M1246b
206	250MA60	600	700	101C	9.0k	10m	175J	Si	S12s
207	703PJA80	800	700	83C	9.0k	10m	150J	Si	M1246b
208	SKN500/08	800	700	100C	7.0k	10m	180J	Si	C242b
209	250MA80	800	700	101C	9.0k	10m	175J	Si	S12s
210	A437E	500	750	65	10k	8.3m	175C	Si△	C246b
211	A437M	600	750	65	10k	8.3m	175C	Si△	C246b
212	A437S	700	750	65	10k	8.3m	175C	Si△	C246b
213	A437N	800	750	65	10k	8.3m	175C	Si△	C246b
214	A596N	800	750	70	10k	8.3m	130	Si	M463
215	A437T	900	750	65	10k	8.3m	175C	Si△	C246b
216	A596T	900	750	70	10k	8.3m	130	Si	M463
217	A442PM	1.6	800	90C	14k		150J	Si△	C245e
218	A442PN	1.8	800	90C	14k		150J	Si△	C245e
219	A442PT	1.9	800	90C	14k		150J	Si△	C245e
220	A442L	2.0	800	90C	14k		150J	Si△	C245e

SYMBOLS AND CODES
EXPLAINED IN INTERPRETER

5. GENERAL-PURPOSE RECTIFIERS - $I_O \geq 500$ A (Cont'd)

IN ORDER OF: (1) IO MAX (2) PIV (3) ° TEMP & (4) TYPE NMBER

LINE No.	4 TYPE NUMBER	2 PIV (V)	MAX AVG FWD DC CURRENT 1 Io MAX (A)	3 @ TEMP (°C)	MAX RATING SURGE CURR PEAK 1 Cy (A)	PULSE WIDTH (s)	MAX. TEMP (°C)	MAT	DRAWING No.
1	A442LA	2.1	800	90C	14k		150J	SiΔ	C245e
2	A442LB	2.2	800	90C	14k		150J	SiΔ	C245e
3	A442LC	2.3	800	90C	14k		150J	SiΔ	C245e
4	FD900-1	100	800	190J	6.0k	8.3m	190J	Si	M637a
5▼	SD400C02C	200	800	55	8.2k	10m	190J	Si	DO200AA
6	SW02KBN805	200	800	100H	15k§	10m	175J	Si	M747⊠
7	SW02KBR805	200	800	100H	17k	10m	175J	Si	S435j
8	DF752-02	200	800	150J	1.2k	10m	150J	Si#	M1337
9	DN662-02	200	800	175J	12k	10m	175J	Si#	M1337
10	FD900-2	200	800	190J	6.0k	8.3m	190J	Si	M637a
11	FD900-3	300	800	190J	6.0k	8.3m	190J	Si	M637a
12▼	SD400C04C	400	800	55	8.2k	10m	190J	Si	DO200AA
13▼	D798N400	400	800	100C	14k§	10m	150J	Si	M1346a
14	SW04KBN805	400	800	100H	15k§	10m	175J	Si	M747⊠
15	SW04KBR805	400	800	100H	17k	10m	175J	Si	S435j
16	DF752-04	400	800	150J	1.2k	10m	150J	Si#	M1337
17	DN662-04	400	800	175J	12k	10m	175J	Si#	M1337
18	FD900-4	400	800	190J	6.0k	8.3m	190J	Si	M637a
19	FD900-5	500	800	190J	6.0k	8.3m	190J	Si	M637a
20▼	SD400C06C	600	800	55	8.2k	10m	190J	Si	DO200AA
21	SW06KBN805	600	800	100H	15k§	10m	175J	Si	M747⊠
22	SW06KBR805	600	800	100H	17k	10m	175J	Si	S435j
23	DF752-06	600	800	150J	1.2k	10m	150J	Si#	M1337
24	DN662-06	600	800	175J	12k	10m	175J	Si#	M1337
25	FD900-6	600	800	190J	6.0k	8.3m	190J	Si	M637a
26	FD900-7	700	800	190J	6.0k	8.3m	190J	Si	M637a
27	SKID800/08	800	800	40C	1.3k	10m	125J	Si	M1286
28▼	SD400C08C	800	800	55	8.2k	10m	190J	Si	DO200AA
29	801F8H	800	800	85	12k	20m	150J	Si	C241a
30▼	D798N800	800	800	100C	14k§	10m	150J	Si	M1346a
31	SW08KBN805	800	800	100H	15k§	10m	175J	Si	M747⊠
32	SW08KBR805	800	800	100H	17k	10m	175J	Si	S435j
33	FD1000A16	800	800	101C	14k§	8.3m	150J	SiΔ	C239a
34	DF752-08	800	800	150J	1.2k	10m	150J	Si#	M1337
35	DN662-08	800	800	175J	12k	10m	175J	Si#	M1337
36	FD900-8	800	800	190J	6.0k	8.3m	190J	Si	M637a
37	FD900-9	900	800	190J	6.0k	8.3m	190J	Si	M637a
38	851PDE40L20	400	850	75C	9.5k		150J	Si	M1277
39	851PDE40L25	400	850	75C	9.5k		150J	Si	M1277
40	851PDE40L30	400	850	78C	9.5k		150J	Si	M1277
41	851PDE50L20	500	850	75C	9.5k		150J	Si	M1277
42	851PDE50L25	500	850	78C	8.0k	5.0m	150J	Si	M1147
43	851PDE50L30	500	850	78C	9.5k		150J	Si	M1277
44	851PDE60L20	600	850	75C	9.5k		150J	Si	M1277
45	851PDE60L25	600	850	75C	9.5k		150J	Si	M1277
46	851PDE60L30	600	850	78C	9.5k		150J	Si	M1277
47	851PDE80L20	800	850	75C	9.5k		150J	Si	M1277
48	851PDE80L25	800	850	75C	9.5k		150J	Si	M1277
49	851PDE80L30	800	850	75C	9.5k		150J	Si	M1277
50♦	SKN870/04	400	870	100C	10k	10m	150J	Si	C246c
51	A620LP	100	900	65	9.5k		150J	Si	C246b
52	R720010900	100	900	110C	8.5k	8.3m	200J	Si	C246f
53	A620CA	200	900	65	9.5k		150J	Si	C246b
54	R720020900	200	900	110C	8.5k	8.3m	200J	Si	C246f
55	A620CB	300	900	65	9.5k		150J	Si	C246b
56	R720030900	300	900	100	8.5k	8.3m	200J	Si	C246
57	A620CC	400	900	65	9.5k		150J	Si	C246b
58	R720040900	400	900	110C	8.5k	8.3m	200J	Si	C246f
59	A620CD	500	900	65	9.5k		150J	Si	C246b
60	R720050900	500	900	100	8.5k	8.3m	200J	Si	C246
61	A620CE	600	900	65	9.5k		150J	Si	C246b
62	R720060900	600	900	110C	8.5k	8.3m	200J	Si	C246f
63	A620CM	700	900	65	9.5k		150J	Si	C246b
64	R720070900	700	900	100	8.5k	8.3m	200J	Si	C246
65	A620CS	800	900	65	9.5k		150J	Si	C246b
66	R720080900	800	900	110C	8.5k	8.3m	200J	Si	C246f
67	A620CN	900	900	65	9.5k		150J	Si	C246b
68	SW02KBR935	200	935	100H	19k	10m	175J	Si	S435j
69	SW04KBR935	400	935	100H	19k	10m	175J	Si	S435j
70	SW06KBR935	600	935	100H	19k	10m	175J	Si	S435j
71	SW08KBR935	800	935	100H	19k	10m	175J	Si	S435j
72	SW02KBN935	200	936	100H	19k§	10m	175J	Si	M747⊠
73	SW04KBN935	400	936	100H	19k§	10m	175J	Si	M747⊠
74	SW06KBN935	600	936	100H	19k§	10m	175J	Si	M747⊠
75	SW08KBN935	800	936	100H	19k§	10m	175J	Si	M747⊠

$I_O \geq 1$ kA

LINE No.	4 TYPE NUMBER	2 PIV (V)	MAX AVG FWD DC CURRENT 1 Io MAX (A)	3 @ TEMP (°C)	MAX RATING SURGE CURR PEAK 1 Cy (A)	PULSE WIDTH (s)	MAX. TEMP (°C)	MAT	DRAWING No.
79	SSiN4283A		1.0k		9.4k		180J	Si	C247
80	SSiN42100A		1.0k		9.4k		180J	Si	C247
81	SSiN42120A		1.0k		9.4k		180J	Si	C247
82	S951SXU01	100	1.0k	85C	16k§	10m	175J	Si	M759⊠
83	800PDB10	100	1.0k	102C			200J	Si	E200B
84	A430A	100	1.0k	113C	10k		175J	Si	C246b
85	NLA430A	100	1.0k	113C	10k	8.3m	200J	Si	C246b
86	SW02CXC300	200	1.0k	25	6.0k	10m	200S	Si	DO200A
87	S951SXU02	200	1.0k	85C	16k§	10m	175J	Si	M759⊠
88	800PDB20	200	1.0k	102C			200J	Si	E200B
89	A430B	200	1.0k	113C	10k		175J	Si	C246b
90	NLA430B	200	1.0k	113C	10k	8.3m	200J	Si	C246b
91	S951SXU03	300	1.0k	85C	16k§	10m	175J	Si	M759⊠
92	800PDB30	300	1.0k	102C			200J	Si	E200B
93	A430C	300	1.0k	113C	10k		175J	Si	C246b
94	NLA430C	300	1.0k	113C	10k	8.3m	200J	Si	C246b
95	S951SXU04	400	1.0k	85C	16k§	10m	175J	Si	M759⊠
96	800PDB40	400	1.0k	102C			200J	Si	E200B
97	A430D	400	1.0k	113C	10k		175J	Si	C246b
98	NLA430D	400	1.0k	113C	10k	8.3m	200J	Si	C246b
99	S951SXU05	500	1.0k	85C	16k§	10m	175J	Si	M759⊠
100	800PDB50	500	1.0k	102C			200J	Si	E200B
101	A430E	500	1.0k	113C	10k	8.3m	200J	SiΔ	C246b
102	NLA430E	500	1.0k	113C	10k	8.3m	200J	Si	C246b
103	S951SXU06	600	1.0k	85C	16k§	10m	175J	Si	M759⊠
104	801PDB60B	600	1.0k	96C	10k§	8.3m	200J	Si	E200b
105	800PDB60	600	1.0k	102C			200J	Si	E200B
106	A430M	600	1.0k	113C	10k	8.3m	200J	SiΔ	C246b
107	NLA430M	600	1.0k	113C	10k	8.3m	200J	Si	C246b
108	DS804SE07	700	1.0k	55H	9.0k		175J	Si	C248
109	S951SXU07	700	1.0k	85C	16k§	10m	175J	Si	M759⊠
110	A430S	700	1.0k	113C	10k	8.3m	200J	SiΔ	C246b
111	NLA430S	700	1.0k	113C	10k	8.3m	200J	Si	C246b
112	DS804SE08	800	1.0k	55H	9.0k		175J	Si	C248
113	S951SXU08	800	1.0k	85C	16k§	10m	175J	Si	M759⊠
114	801PDB80B	800	1.0k	96C	10k§	8.3m	200J	Si	E200b
115	A430N	800	1.0k	113C	10k	8.3m	200J	SiΔ	C246b
116	NLA430N	800	1.0k	113C	10k	8.3m	200J	Si	C246b
117	DS804SE09	900	1.0k	55H	9.0k		175J	Si	C248
118	S951SXU09	900	1.0k	85C	16k§	10m	175J	Si	M759⊠
119	A430T	900	1.0k	113C	10k	8.3m	200J	SiΔ	C246b
120	NLA430T	900	1.0k	113C	10k	8.3m	200J	Si	C246b
121	DN762-02	200	1.1k	175J	15k	10m	175J	Si#	M1337
122	DN762-04	400	1.1k	175J	15k	10m	175J	Si#	M1337
123	DN762-06	600	1.1k	175J	15k	10m	175J	Si#	M1337
124	DN762-08	800	1.1k	175J	15k	10m	175J	Si#	M1337
125	GD1400-1	100	1.15k	190J	8.0k	8.3m	190J	Si	M637
126	AR904P02	200	1150	55H	9.0k§	10m	175J	SiΔ	M1005§%
127	AR904S02	200	1150	55H	9.0k§	10m	175J	SiΔ	M1005♦%
128	GD1400-2	200	1.15k	190J	8.0k	8.3m	190J	Si	M637
129	AR904P03	300	1150	55H	9.0k§	10m	175J	SiΔ	M1005§%
130	AR904S03	300	1150	55H	9.0k§	10m	175J	SiΔ	M1005♦%
131	GD1400-3	300	1.15k	190J	8.0k	8.3m	190J	Si	M637
132	AR904P04	400	1150	55H	9.0k§	10m	175J	SiΔ	M1005§%
133	AR904S04	400	1150	55H	9.0k§	10m	175J	SiΔ	M1005♦%
134	GD1400-4	400	1.15k	190J	8.0k	8.3m	190J	Si	M637
135	AR904P05	500	1150	55H	9.0k§	10m	175J	SiΔ	M1005§%
136	AR904S05	500	1150	55H	9.0k§	10m	175J	SiΔ	M1005♦%
137	GD1400-5	500	1.15k	190J	8.0k	8.3m	190J	Si	M637
138	AR904P06	600	1150	55H	9.0k§	10m	175J	SiΔ	M1005§%
139	AR904S06	600	1150	55H	9.0k§	10m	175J	SiΔ	M1005♦%
140	GD1400-6	600	1.15k	190J	8.0k	8.3m	190J	Si	M637
141	AR904P07	700	1150	55H	9.0k§	10m	175J	SiΔ	M1005§%
142	AR904S07	700	1150	55H	9.0k§	10m	175J	SiΔ	M1005♦%
143	GD1400-7	700	1.15k	190J	8.0k	8.3m	190J	Si	M637
144	AR904P08	800	1150	55H	9.0k§	10m	175J	SiΔ	M1005§%
145	AR904S08	800	1150	55H	9.0k§	10m	175J	SiΔ	M1005♦%
146	GD1400-8	800	1.15k	190J	8.0k	8.3m	190J	Si	M637
147	AR904P09	900	1150	55H	9.0k§	10m	175J	SiΔ	M1005§%
148	AR904S09	900	1150	55H	9.0k§	10m	175J	SiΔ	M1005♦%
149	GD1400-9	900	1.15k	190J	8.0k	8.3m	190J	Si	M637
150	S1101SXU01	100	1.2k	80C	25k§	10m	175J	Si	M759⊠
151	1200PDE10	100	1.2k	100C			200J	SiΔ	M1277a
152	R720011200	100	1.2k	107C	12k	8.3m	200J	Si	C246f
153	HD1500-1	100	1.2k	150J	18k	8.3m	150J	Si	M637c
154	SW02CXC400	200	1.2k	25	8.2k	10m	200S	Si	DO200A
155	S1101SXU02	200	1.2k	80C	25k§	10m	175J	Si	M759⊠
156	1200PDE20	200	1.2k	100C			200J	SiΔ	M1277a
157	R720021200	200	1.2k	107C	12k	8.3m	200J	Si	C246f
158	1201PDE20	200	1.2k	115C	13k		200J	SiΔ	M1277
159	HD1500-2	200	1.2k	150J	18k	8.3m	150J	Si	M637c
160	S1101SXU03	300	1.2k	80C	25k§	10m	175J	Si	M759⊠
161	1200PDE30	300	1.2k	100C			200J	SiΔ	M1277a
162	R720031200	300	1.2k	100	12k	8.3m	200J	Si	C246
163	1201PDE30	300	1.2k	115C	13k		200J	SiΔ	M1277
164	HD1500-3	300	1.2k	150J	18k	8.3m	150J	Si	M637c
165	S1101SXU04	400	1.2k	80C	25k§	10m	175J	Si	M759⊠
166	1200PDE40	400	1.2k	100C			200J	SiΔ	M1277a
167	R720041200	400	1.2k	107C	12k	8.3m	200J	Si	C246f
168	1201PDE40	400	1.2k	115C	13k		200J	SiΔ	M1277
169	HD1500-4	400	1.2k	150J	18k	8.3m	150J	Si	M637c
170	S1101SXU05	500	1.2k	80C	25k§	10m	175J	Si	M759⊠
171	1200PDE50	500	1.2k	100C			200J	SiΔ	M1277a
172	R720051200	500	1.2k	100	12k	8.3m	200J	Si	C246
173	A330E	500	1.2k	112C	11k		200J	SiΔ	M1147
174	HD1500-5	500	1.2k	150J	18k	8.3m	150J	Si	M637c
175	S1101SXU06	600	1.2k	80C	25k§	10m	175J	Si	M759⊠
176	1200PDE60	600	1.2k	100C			200J	SiΔ	M1277a
177	R720061200	600	1.2k	107C	12k	8.3m	200J	Si	C246f
178	A330M	600	1.2k	112C	11k		200J	SiΔ	M1147
179	1201PDE60	600	1.2k	115C	13k		200J	SiΔ	M1277
180	HD1500-6	600	1.2k	150J	18k	8.3m	150J	Si	M637c
181	S1101SXU07	700	1.2k	80C	25k§	10m	175J	Si	M759⊠
182	R720071200	700	1.2k	100	12k	8.3m	200J	Si	C246
183	A330S	700	1.2k	112C	11k		200J	SiΔ	M1147
184	HD1500-7	700	1.2k	150J	18k	8.3m	150J	Si	M637c
185	S1101SXU08	800	1.2k	80C	25k§	10m	175J	Si	M759⊠
186	R720081200	800	1.2k	107C	12k	8.3m	200J	Si	C246f
187	A330N	800	1.2k	112C	11k		200J	SiΔ	M1147
188	1201PDE80	800	1.2k	115C	13k		200J	SiΔ	M1277
189	HD1500-8	800	1.2k	150J	18k	8.3m	150J	Si	M637c
190	S1101SXU09	900	1.2k	80C	25k§	10m	175J	Si	M759⊠
191	R720091200	900	1.2k	100	12k	8.3m	200J	Si	C246
192	A330T	900	1.2k	112C	11k		200J	SiΔ	M1147
193	HD1500-9	900	1.2k	150J	18k	8.3m	150J	Si	M637c
194	SKN1500/04	500	1.27k	100C	16k	10m	175C	Si	C246h
195	R9G0011300	100	1.3k	140C	16k	8.3m	190J	Si	C246e
196	R9G0021300	200	1.3k	140C	16k	8.3m	190J	Si	C246e
197	R9G0041300	400	1.3k	140C	16k	8.3m	190J	Si	C246e
198	R9G0061300	600	1.3k	140C	16k	8.3m	190J	Si	C246e
199	R9G0081300	800	1.3k	140C	16k	8.3m	190J	Si	C246e
200	1500PJA10	100	1.5k	72C	18k	10m	150J	Si	M1249
201	SKWD1500/01	100	1.5k	125J	33k	10m	125J	Si	M1286
202	1500PJA20	200	1.5k	72C	18k	10m	150J	Si	M1249
203	A570B	200	1.5k	80	18k	8.3m	200	SiΔ	M463
204	SKWD1500/02	200	1.5k	125J	33k	10m	125J	Si	M1286
205	1500PJA30	300	1.5k	72C	18k	10m	150J	Si	M1249
206	A570C	300	1.5k	80	18k	8.3m	200	SiΔ	M463
207	1500PJA40	400	1.5k	72C	18k	10m	150J	Si	M1249
208	A570D	400	1.5k	80	18k	8.3m	200	SiΔ	M463
209	SKWD1500/04	400	1.5k	125J	33k	10m	125J	Si	M1286
210	A570E	500	1.5k	80	18k	8.3m	200	SiΔ	M463
211	A440E	500	1.5k	115C	21k		200J	SiΔ	C245e
212	A570M	600	1.5k	80	18k	8.3m	200	SiΔ	M463
213	A440M	600	1.5k	115C	21k		200J	SiΔ	C245e
214	A440S	700	1.5k	115C	21k		200J	SiΔ	C245e
215	A440N	800	1.5k	115C	21k		200J	SiΔ	C245e
216	A440T	900	1.5k	115C	21k		200J	SiΔ	C245e
217	FD1600BP2	100	1.6k	105C	28k§	8.3m	200J	SiΔ	M880
218	FD1600BP4	200	1.6k	105C	28k§	8.3m	200J	SiΔ	M880
219	FD1600BP6	300	1.6k	105C	28k§	8.3m	200J	SiΔ	M880
220	1600FD26	300	1.6k	175J	25k	10m	175J	Si	M996

SYMBOLS AND CODES EXPLAINED IN INTERPRETER

5. GENERAL-PURPOSE RECTIFIERS - $I_O \geq 1$ kA (Cont'd)

IN ORDER OF: (1) IO MAX (2) PIV
(3) ° TEMP & (4) TYPE NMBER

LINE No.	4 TYPE NUMBER	2 PIV (V)	MAX AVG FWD DC CURRENT 1 Io MAX (A)	3 @ TEMP (°C)	MAX RATING SURGE CURR PEAK 1 Cy (A)	PULSE WIDTH (s)	MAX. TEMP (°C)	MAT	DRAWING No.
1	FD1600BP8	400	1.6k	104C	20k§	8.3m	200J	Si△	M880
2	FD1600BP10	500	1.6k	104C	20k§	8.3m	200J	Si△	M880
3	FD1600A16	800	1.6k	91C	35k§	8.3m	150J	Si△	C244a
4	SKN2000/06	700	1.65k	100C	25k	10m	175C	Si	C246l
5	HD2100-1	100	1.7k	150J	22k	8.3m	150J	Si	M637c
6	JD2300-1	100	1.7k	150J	35k	8.3m	150J	Si	M946
7	HD2100-2	200	1.7k	150J	22k	8.3m	150J	Si	M637c
8	JD2300-2	200	1.7k	150J	35k	8.3m	150J	Si	M946
9	HD2100-3	300	1.7k	150J	22k	8.3m	150J	Si	M637c
10	HD2100-4	400	1.7k	150J	22k	8.3m	150J	Si	M637c
11	JD2300-4	400	1.7k	150J	35k	8.3m	150J	Si	M946
12	HD2100-5	500	1.7k	150J	22k	8.3m	150J	Si	M637c
13	HD2100-6	600	1.7k	150J	22k	8.3m	150J	Si	M637c
14	JD2300-6	600	1.7k	150J	35k	8.3m	150J	Si	M946
15	HD2100-7	700	1.7k	150J	22k	8.3m	150J	Si	M637c
16	HD2100-8	800	1.7k	150J	22k	8.3m	150J	Si	M637c
17	JD2300-8	800	1.7k	150J	35k	8.3m	150J	Si	M946
18	HD2100-9	900	1.7k	150J	22k	8.3m	150J	Si	M637c
19	R9G0011800	100	1.8k	115C	21k	8.3m	175J	Si	C246e
20	R9G0021800	200	1.8k	115C	21k	8.3m	175J	Si	C246e
21	R9G0041800	400	1.8k	115C	21k	8.3m	175J	Si	C246e
22	R9G0061800	600	1.8k	115C	21k	8.3m	175J	Si	C246e
23	R9G0081800	800	1.8k	115C	21k	8.3m	175J	Si	C246e
24	DN961-02	200	1.9k	175J	27k	10m	175J	Si	C2460
25	DN961-04	400	1.9k	175J	27k	10m	175J	Si	C2460
26	DN961-06	600	1.9k	175J	27k	10m	175J	Si	C2460
27	DN961-08	800	1.9k	175J	27k	10m	175J	Si	C2460
$I_O \geq 2$ kA									
31	DS1101SM01	100	2.0k	55C	25k§	10m	200S	Si△	M757
32	A621A	100	2.0k	65C	25k		175J	Si	C246b
33	DS1101SM02	200	2.0k	55C	25k§	10m	200S	Si△	M757
34	A621B	200	2.0k	65C	25k		175J	Si	C246b
35	DS1101SM03	300	2.0k	55C	25k§	10m	200S	Si△	M757
36	A621C	300	2.0k	65C	25k		175J	Si	C246b
37▼	D2S400	400	2.0k	50C	70 §	10m	130J	Si	A422
38	DS1101SM04	400	2.0k	55C	25k§	10m	200S	Si△	M757
39	A621D	400	2.0k	65C	25k		175J	Si	C246b
40	DS1101SM05	500	2.0k	55C	25k§	10m	200S	Si△	M757
41	A621E	500	2.0k	65C	25k		175J	Si	C246b
42	DS1101SM06	600	2.0k	55C	25k§	10m	200S	Si△	M757
43	A621M	600	2.0k	65C	25k		175J	Si	C246b
44	2001PDK60	600	2.0k	105C	30 §	8.3m	200J	Si△	C245a
45	DS1101SM07	700	2.0k	55C	25k§	10m	200S	Si△	M757
46	A621S	700	2.0k	65C	25k		175J	Si	C246b
47	DS1101SM08	800	2.0k	55C	25k§	10m	200S	Si△	M757
48	A621N	800	2.0k	65C	25k		175J	Si	C246b
49	2001PDK80	800	2.0k	105C	30 §	8.3m	200J	Si△	C245a
50	DS1101SM09	900	2.0k	55C	25k§	10m	200S	Si△	M757
51	A621T	900	2.0k	65C	25k		175J	Si	C246b
52	HD2500-1	100	2.16k	190J	22k	8.3m	190J	Si	M637c
53	HD2500-2	200	2.16k	190J	22k	8.3m	190J	Si	M637c
54	HD2500-3	300	2.16k	190J	22k	8.3m	190J	Si	M637c
55	HD2500-4	400	2.16k	190J	22k	8.3m	190J	Si	M637c
56	HD2500-5	500	2.16k	190J	22k	8.3m	190J	Si	M637c
57	HD2500-6	600	2.16k	190J	22k	8.3m	190J	Si	M637c
58	HD2500-7	700	2.16k	190J	22k	8.3m	190J	Si	M637c
59	HD2500-8	800	2.16k	190J	22k	8.3m	190J	Si	M637c
60	HD2500-9	900	2.16k	190J	22k	8.3m	190J	Si	M637c
61	R9G0012200	100	2.2k	120C	30k	8.3m	150J	Si	C246e
62▼	D2228N200	200	2.2k	109C	29k§	10m	180J	Si	M1346b
63	R9G0022200	200	2.2k	120C	30k	8.3m	150J	Si	C246e
64▼	D2228N400	400	2.2k	109C	29k§	10m	180J	Si	M1346b
65	R9G0042200	400	2.2k	120C	30k	8.3m	150J	Si	C246e
66▼	D2228N600	600	2.2k	109C	29k§	10m	180J	Si	M1346b
67	R9G0062200	600	2.2k	120C	30k	8.3m	150J	Si	C246e
68▼	D2228N800	800	2.2k	109C	29k§	10m	180J	Si	M1346b
69	R9G0082200	800	2.2k	120C	30k	8.3m	150J	Si	C246e
70	AR2004P06	600	2250	55H	25k§	10m	175J	Si△	M1006§%
71	AR2004S06	600	2250	55H	25k§	10m	175J	Si△	M1006♦%
72	AR2004P07	700	2250	55H	25k§	10m	175J	Si△	M1006§%
73	AR2004S07	700	2250	55H	25k§	10m	175J	Si△	M1006♦%
74	AR2004P08	800	2250	55H	25k§	10m	175J	Si△	M1006§%
75	AR2004S08	800	2250	55H	25k§	10m	175J	Si△	M1006♦%
76	AR2004P09	900	2250	55H	25k§	10m	175J	Si△	M1006§%
77	AR2004S09	900	2250	55H	25k§	10m	175J	Si△	M1006♦%
78	JD3000-1	100	2.4k	150J	45k	8.3m	150J	Si	M946
79	HD3000-1	100	2.4k	190J	28k	8.3m	190J	Si	M637c
80	JD3000-2	200	2.4k	150J	45k	8.3m	150J	Si	M946
81	HD3000-2	200	2.4k	190J	28k	8.3m	190J	Si	M637c
82	HD3000-3	300	2.4k	190J	28k	8.3m	190J	Si	M637c
83	JD3000-4	400	2.4k	150J	45k	8.3m	150J	Si	M946
84	HD3000-4	400	2.4k	190J	28k	8.3m	190J	Si	M637c
85	HD3000-5	500	2.4k	190J	28k	8.3m	190J	Si	M637c
86	JD3000-6	600	2.4k	150J	45k	8.3m	150J	Si	M946
87	HD3000-6	600	2.4k	190J	28k	8.3m	190J	Si	M637c
88	JD3000-8	800	2.4k	150J	45k	8.3m	150J	Si	M946
89	2501PDK20	200	2.5k	115C	35k§	8.3m	200J	Si△	C1001⊠
90	2501PDK30	300	2.5k	115C	35k§	8.3m	200J	Si△	C1001⊠
91	2501PDK40	400	2.5k	115C	35k§	8.3m	200J	Si△	C1001⊠
92	2501PDK60	600	2.5k	115C	35k§	8.3m	200J	Si△	C1001⊠
93	SW02CXC805	200	2.7k	25	17k	10m	200S	Si	DO200A
94♦	DS2002SN01	100	2.8k	55H	33k	10m	175J	Si△	C245a
95♦	DS2002SN02	200	2.8k	55H	33k	10m	175J	Si△	C245a
96♦	DS2002SN03	300	2.8k	55H	33k	10m	175J	Si△	C245a
97♦	DS2002SN04	400	2.8k	55H	33k	10m	175J	Si△	C245a
98♦	DS2002SN05	500	2.8k	55H	33k	10m	175J	Si△	C245a
99♦	DS2002SN06	600	2.8k	55H	33k	10m	175J	Si△	C245a
100♦	DS2002SN07	700	2.8k	55H	33k	10m	175J	Si△	C245a
101♦	DS2002SN08	800	2.8k	55H	33k	10m	175J	Si△	C245a
102♦	DS2002SN09	900	2.8k	55H	33k	10m	175J	Si△	C245a
103	3000PJA10	100	3.0k		35k	10m	175J	Si	M1250
104	JD4000-1	100	3.0k	150J	50k	8.3m	150J	Si	M946
105	3000BD21	100	3.0k	175J	45k	10m	175J	Si	M997
106	JD4000-2	200	3.0k	150J	50k	8.3m	150J	Si	M946
107	JD4000-3	300	3.0k	150J	50k	8.3m	150J	Si	M946
108	JD4000-4	400	3.0k	150J	50k	8.3m	150J	Si	M946
109	JD4000-5	500	3.0k	150J	50k	8.3m	150J	Si	M946
110	JD4000-6	600	3.0k	150J	50k	8.3m	150J	Si	M946
111	JD4000-7	700	3.0k	150J	50k	8.3m	150J	Si	M946
112	JD4000-8	800	3.0k	150J	50k	8.3m	150J	Si	M946
113	JD4000-9	900	3.0k	150J	50k	8.3m	150J	Si	M946
114	SW02CXC935	200	3.2k	25	22k	10m	200S	Si	DO200A
115	JD4500-1	100	3.4k	150J	60k	8.3m	150J	Si	M946
116	JD4500-2	200	3.4k	150J	60k	8.3m	150J	Si	M946
117	JD4500-3	300	3.4k	150J	60k	8.3m	150J	Si	M946
118	JD4500-4	400	3.4k	150J	60k	8.3m	150J	Si	M946
119	JD4500-5	500	3.4k	150J	60k	8.3m	150J	Si	M946
120	JD4500-6	600	3.4k	150J	60k	8.3m	150J	Si	M946
121	JD4500-7	700	3.4k	150J	50k	8.3m	150J	Si	
122	JD4500-8	800	3.4k	150J	50k	8.3m	150J	Si	
123	JD4500-9	900	3.4k	150J	50k	8.3m	150J	Si	
124	FD3500BP-2	100	3.5k	91H	55k§	8.3m	175J	Si△	M880a
125	FD3500BP4	200	3.5k	91C	55k§	8.3m	175J	Si△	M1343
126	FD3500BP-4	200	3.5k	91H	55k§	8.3m	175J	Si△	M880a
127	FD3500BP6	300	3.5k	91C	55k§	8.3m	175J	Si△	M1343
128	FD3500BP-6	300	3.5k	91H	55k§	8.3m	175J	Si△	M880a
129	FD3500BP8	400	3.5k	91C	55k§	8.3m	175J	Si△	M1343
130	FD3500BP-8	400	3.5k	91H	55k§	8.3m	175J	Si△	M880a
131	FD3500BP10	500	3.5k	91C	55k§	8.3m	175J	Si△	M1343
132	FD3500BP-10	500	3.5k	91H	55k§	8.3m	175J	Si△	M880a
133	FD3500BP-12	600	3.5k	91H	55k§	8.3m	175J	Si△	M880a
134	RA200136XX00	100	3.6k		40k		190J	Si	C246n
135	RA200236XX00	200	3.6k		40k		190J	Si	C246n
136	RA200436XX00	400	3.6k		40k		190J	Si	C246n
137	RA200636XX00	600	3.6k		40k		190J	Si	C246n
138	RA200836XX00	800	3.6k		40k		190J	Si	C246n
139	SKN4000/01	100	4.0k	50C	60k	10m	180J	Si	C256
140	SKN4000/02	200	4.0k	50C	60k	10m	180J	Si	C256
141	SKN4000/04	400	4.0k	50C	60k	10m	180J	Si	C256
142	SKN4000/06	600	4.0k	50C	60k	10m	180J	Si	C256
143	4001PDR60	600	4.0k	105C	84k		175J	Si	C246o
144	4001PDR80	800	4.0k	105C	84k		175J	Si	C246o
145	JD5000-1	100	4.2k	190J	60k	8.3m	190J	Si	M946
146	JD5000-2	200	4.2k	190J	60k	8.3m	190J	Si	M946
147	JD5000-3	300	4.2k	190J	60k	8.3m	190J	Si	M946
148	JD5000-4	400	4.2k	190J	60k	8.3m	190J	Si	M946
149	JD5000-5	500	4.2k	190J	60k	8.3m	190J	Si	M946
150	JD5000-6	600	4.2k	190J	60k	8.3m	190J	Si	M946
151	SW02CXC14C	200	4.3k	25	36k	10m	200S	Si	DO200A
152	KD6000-1	100	4.75k	150J	70k	8.3m	150J	Si	
153	JD6000-1	100	4.75k	190J	70k	8.3m	190J	Si	M946
154	KD6000-2	200	4.75k	150J	70k	8.3m	150J	Si	
155	JD6000-2	200	4.75k	190J	70k	8.3m	190J	Si	M946
156	KD6000-3	300	4.75k	150J	70k	8.3m	150J	Si	
157	JD6000-3	300	4.75k	190J	70k	8.3m	190J	Si	M946
158	KD6000-4	400	4.75k	150J	70k	8.3m	150J	Si	
159	JD6000-4	400	4.75k	190J	70k	8.3m	190J	Si	M946
160	KD6000-5	500	4.75k	150J	70k	8.3m	150J	Si	
161	JD6000-5	500	4.75k	190J	70k	8.3m	190J	Si	M946
162	KD6000-6	600	4.75k	150J	70k	8.3m	150J	Si	
163	JD6000-6	600	4.75k	190J	70k	8.3m	190J	Si	M946
164	RA200148XX00	100	4.8k		49k		175J	Si	C246n
$I_O \geq 5$ kA									
168	AR1101P01	100	5.0k	55H	25k§	10m	175J	Si△	M1005§%
169	AR1101S01	100	5.0k	55H	25k§	10m	175J	Si△	M1005♦%
170	SKWD5000/01	100	5.0k	180J	100k	10m	180J	Si	M1301
171	AR1101P02	200	5.0k	55H	25k§	10m	175J	Si△	M1005§%
172	AR1101S02	200	5.0k	55H	25k§	10m	175J	Si△	M1005♦%
173	SKWD5000/02	200	5.0k	180J	100k	10m	180J	Si	M1301
174	AR1101P03	300	5.0k	55H	25k§	10m	175J	Si△	M1005§%
175	AR1101S03	300	5.0k	55H	25k§	10m	175J	Si△	M1005♦%
176	AR1101P04	400	5.0k	55H	25k§	10m	175J	Si△	M1005§%
177	AR1101S04	400	5.0k	55H	25k§	10m	175J	Si△	M1005♦%
178	SKWD5000/04	400	5.0k	180J	100k	10m	180J	Si	M1301
179	AR1101P05	500	5.0k	55H	25k§	10m	175J	Si△	M1005§%
180	AR1101S05	500	5.0k	55H	25k§	10m	175J	Si△	M1005♦%
181	AR1101P06	600	5.0k	55H	25k§	10m	175J	Si△	M1005§%
182	AR1101S06	600	5.0k	55H	25k§	10m	175J	Si△	M1005♦%
183	SKWD5000/06	600	5.0k	180J	100k	10m	180J	Si	M1301
184	AR1101P07	700	5.0k	55H	25k§	10m	175J	Si△	M1005§%
185	AR1101S07	700	5.0k	55H	25k§	10m	175J	Si△	M1005♦%
186	AR1101P08	800	5.0k	55H	25k§	10m	175J	Si△	M1005§%
187	AR1101S08	800	5.0k	55H	25k§	10m	175J	Si△	M1005♦%
188	AR1101P09	900	5.0k	55H	25k§	10m	175J	Si△	M1005§%
189	AR1101S09	900	5.0k	55H	25k§	10m	175J	Si△	M1005♦%
190▼	D4400N200	200	5.8k	62C	76k§	10m	180J	Si	M1346a
191▼	D4409N200	200	5.8k	62C	76k§	10m	180J	Si	M1346d
192▼	D4400N400	400	5.8k	62C	76k§	10m	180J	Si	M1346a
193▼	D4409N400	400	5.8k	62C	76k§	10m	180J	Si	M1346d
194▼	D4400N600	600	5.8k	62C	76k§	10m	180J	Si	M1346a
195▼	D4409N600	600	5.8k	62C	76k§	10m	180J	Si	M1346d
196▼	D4400N800	800	5.8k	62C	76k§	10m	180J	Si	M1346a
197▼	D4409N800	800	5.8k	62C	76k§	10m	180J	Si	M1346d
198	SKWD7000/02	200	7.0k	180J	120k	10m	180J	Si	M1302
199	SKWD7000/04	400	7.0k	180J	120k	10m	180J	Si	M1302
200	SKWD7000/06	600	7.0k	180J	120k	10m	180J	Si	M1302

SYMBOLS AND CODES
EXPLAINED IN INTERPRETER

IN ORDER OF:(1)TYPE CODE(2)MAX.FWD.CURR. (3)Vrrm(4)TYPE NO.

LINE No.	4 TYPE NUMBER	DATA SHT.	1 TYPE CODE	2 MAX. FORWARD CURRENT (A)	@ °C	3 Vrrm (V)	DIODE/ CKT. NO. OF CKTS.	CONN	VF MAX (V)	@ IF (A)	MAXIMUM REVERSE RECOVERY TIME trr (s)	IF (A)	Ir (A)	MAX.STATIC REVERSE CURRENT (A)	@ Vr (V)	PD RATED MAX (W)	OPER. TEMP. RANGE CODE -	+	DRAWINGS CIRCUIT	OUTLINE
DIODE ARRAY																				
4	BAW56G		ARR			70	1-2	B							70	180m				
5	BAW56GT		ARR			300	1-2	B							300	180m				
6	BGX50A		ARR			50	1-2	B	70	9.0					50	250m				
7	DAN401		ARR	25m		45	1-4	A	0.9	5.0m	2.0n	5.0m		0.1u	35	80m	4	8		M1223
8	DAN601		ARR	25m		45	1-6	K	0.9	5.0m	2.0n	5.0m		0.1u	35	80m	4	8		M1225
9	DAP401		ARR	25m		45	1-4	K	0.9	5.0m	4.0n	5.0m		0.1u	35	80m	4	8		M1223
10	DAP601		ARR	25m		45	1-6	A	0.9	5.0m	4.0n	5.0m		0.1u	35	80m	4	8		M1225
11▼	16G010F		ARR	28m	2	18	1-15	I	1.1	15m				1.0u	4.0	1.5	6	F	D0035	M1360
12	DAN403		ARR	100m		45	1-4	I	0.9	5.0m	4.0n	5.0m		0.5u	35	200m	4	8		M1224
13	DAN201		ARR	150m		45	1-2	K	0.9	5.0m	4.0n	5.0m		0.5u	35	300m	5	8		M1206
14	DAN201VA		ARR	150m		80	1-2	K	0.9	5.0m	4.0n	5.0m		0.5u	70	300m	5	8		M1206
15	DAN202		ARR	150m		45	1-2	K	0.9	5.0m	4.0n	5.0m		0.5u	35	200m	5	8		M1206
16	DAN202VA		ARR	150m		80	1-2	K	0.9	5.0m	4.0n	5.0m		0.5u	70	200m	5	8		M1206
17	DAP201		ARR	150m		45	1-2	A	0.9	5.0m	4.0n	5.0m		0.5u	35	300m	5	8		M1206
18	DAP201VA		ARR	150m		80	1-2	A	0.9	5.0m	4.0n	5.0m		0.5u	70	300m	5	8		M1206
19	DAP202		ARR	150m		45	1-2	A	0.9	5.0m	4.0n	5.0m		0.5u	35	200m	5	8		M1206
20	DAP202VA		ARR	150m		80	1-2	A	0.9	5.0m	4.0n	5.0m		0.5u	70	200m	5	8		M1206
21▼	16G011F		ARR	200m	2	18	1-15	I	1.1	100m				5.0u	5.0	1.5	6	F	D0035	M1360
22▼	16G011L		ARR	200m	2	18	1-15	I	1.1	100m				5.0u	5.0	1.5	6	F	D0034	M1359
23	uPA54H		ARR	200m	2A	75	6-1	K	1.0	30m	2.0n			100n	30	300m		C	D002n	SL7A
24	uPA64H		ARR	200m	2A	75	6-1	A	1.0	30m	8.0n			100n	30	300m		C	D003n	SL7A
25	FSA2565M		ARR	250m	2	60	13-1	K	1.0	100m	50n	500m	50m	100n	40	650m	5	F	D0021	DL16cp
26	DAN205		ARR	300m		40	1-2	K	1.0	50m	2.0n	10m		0.5u	35	300m	5	8		M1206
27	DAN206		ARR	300m		75	1-2	K	1.0	50m	2.0n	10m		0.5u	65	300m	5	8		M1206
28	1N5768		ARR	300m	2A	60	8-1	K	1.0	100m	20n	200m	200m	100n	40	500m	6	F	D003a	FP26h
29	1N5770		ARR	300m	2A	60	8-1	A	1.0	100m	20n	200m	200m	100n	40	500m	6	F	D003a	FP26h
30	1N5772		ARR	300m	2A	60	16-1	D	1.0	100m	20n	200m	200m	100n	40	500m	6	F	D001	FP26h
31	1N5774		ARR	300m	2A	60	8-2	D	1.0	100m	20n	200m	200m	100n	40	500m	6	F	D004	FP127
32	BAT23G		ARR	300m	2	60	16-1	D	1.0	100m	20n	200m	200m	100n	40	500m	5	C	D001	FP26l
33	BAT23H		ARR	300m	2	60	16-1	D	1.0	100m	20n	200m	200m	100n	40	500m	6	F	D001	FP26l
34	BAT24G		ARR	300m	2	40	16-1	D	1.1	100m	20n	200m	200m	100n	25	500m	5	C	D001	FP26l
35	BAT24H		ARR	300m	2	40	16-1	D	1.1	100m	20n	200m	200m	100n	25	500m	6	F	D001	FP26l
36	BAT27G		ARR	300m	2	60	16-2	D	1.0	100m	20n	200m	200m	100n	40	500m	5	C	D004	FP142
37	BAT27H		ARR	300m	2	60	16-2	D	1.0	100m	20n	200m	200m	100n	40	500m	6	F	D004	FP142
38	BAT28G		ARR	300m	2	40	16-2	D	1.1	100m	20n	200m	200m	100n	25	500m	5	C	D004	FP142
39	BAT28H		ARR	300m	2	40	16-2	D	1.1	100m	20n	200m	200m	100n	25	500m	6	F	D004	FP142
40	BAX45		ARR	300m	2	40	2-1	D	1.0	100m	25n	200m	200m	100n	40	400m		H	D001h	TO77
41	BAX46		ARR	300m	2	40	2-1	D	1.0	100m	25n	200m	200m	100n	40	400m		H	D001g	TO72
42	BAX47		ARR	300m	2	40	4-1	D	1.0	100m	25n	200m	200m	100n	40	400m		H	D001f	TO77
43	BAX48		ARR	300m	2	40	4-1	D	1.0	100m	25n	200m	200m	100n	40	400m		H	D001e	TO72
44	BAX49		ARR	300m	2	40	6-1	D	1.0	100m	25n	200m	200m	100n	40	400m		H	D001d	TO96
45	BAX50		ARR	300m	2	40	8-1	D	1.0	100m	25n	200m	200m	100n	40	400m		H	D001c	TO96
46	BAX51		ARR	300m	2	40	16-1	D	1.0	100m	25n	200m	200m	100n	40	400m		H	D001b	TO96
47	BAX52		ARR	300m	2	40	4-1	B	1.0	100m	25n	200m	200m	100n	40	400m		H	D0011	TO12
48	BAX53		ARR	300m	2	40	4-1	B	1.0	100m	25n	200m	200m	100n	40	400m		H	D0011	TO72
49	BAX54		ARR	300m	2	40	4-1	B	1.0	100m	25n	200m	200m	100n	40	400m		H	D0011	TO12
50	BAX55		ARR	300m	2	40	4-1	B	1.0	100m	25n	200m	200m	100n	40	400m		H	D0011	TO72
51	BAX56		ARR	300m	2	40	2-1	K	1.0	100m	4.0n	200m	200m	100n	40	400m		H	D002j	TO77
52	BAX57		ARR	300m	2	40	2-1	A	1.0	100m	4.0n	200m	200m	100n	40	400m		H	D003j	TO77
53	BAX58		ARR	300m	2	40	2-1	K	1.0	100m	4.0n	200m	200m	100n	40	400m		H	D002h	TO72
54	BAX59		ARR	300m	2	40	2-1	A	1.0	100m	4.0n	200m	200m	100n	40	400m		H	D003h	TO72
55	BAX60		ARR	300m	2	40	3-1	K	1.0	100m	4.0n	200m	200m	100n	40	400m		H	D002g	TO77
56	BAX61		ARR	300m	2	40	3-1	A	1.0	100m	4.0n	200m	200m	100n	40	400m		H	D003g	TO77
57	BAX62		ARR	300m	2	40	3-1	K	1.0	100m	4.0n	200m	200m	100n	40	400m		H	D002f	TO72
58	BAX63		ARR	300m	2	40	3-1	A	1.0	100m	4.0n	200m	200m	100n	40	400m		H	D003f	TO72
59	BAX64		ARR	300m	2	40	4-1	A	1.0	100m	4.0n	200m	200m	100n	40	400m		H	D002e	TO77
60	BAX65		ARR	300m	2	40	4-1	K	1.0	100m	4.0n	200m	200m	100n	40	400m		H	D003e	TO77
61	BAX66		ARR	300m	2	40	5-1	A	1.0	100m	4.0n	200m	200m	100n	40	400m		H	D002d	TO77
62	BAX67		ARR	300m	2	40	5-1	K	1.0	100m	4.0n	200m	200m	100n	40	400m		H	D003d	TO77
63	BAX68		ARR	300m	2	40	6-1	A	1.0	100m	4.0n	200m	200m	100n	40	400m		H	D002c	TO77
64	BAX69		ARR	300m	2	40	6-1	K	1.0	100m	4.0n	200m	200m	100n	40	400m		H	D003c	TO77
65	BAX70		ARR	300m	2	40	7-1	A	1.0	100m	4.0n	200m	200m	100n	40	440m		H	D003b	TO77
66	BAX71		ARR	300m	2	40	7-1	K	1.0	100m	4.0n	200m	200m	100n	40	400m		H	D003b	TO77
67	BAX72		ARR	300m	2	40	8-1	A	1.0	100m	4.0n	200m	200m	100n	40	400m		H	D002a	TO96
68	BAX73		ARR	300m	2	40	8-1	K	1.0	100m	4.0n	200m	200m	100n	40	400m		H	D003a	TO96
69	FSA2702M		ARR	300m	2	60	4-1	B	1.0	200m	6.0n	10m	10m	100n	40	500m	5	F	D0011	TO33
70	FSA2703M		ARR	300m	2	60	4-1	B	1.0	200m	6.0n	10m	10m	100n	40	500m	5	F	D0011	TO72
71	FSA2704M		ARR	300m	2	60	4-1	B	1.0	200m	6.0n	10m	10m	100n	40	500m	5	F	D0011	TO33
72	FSA2705M		ARR	300m	2	60	4-1	B	1.0	200m	6.0n	10m	10m	100n	40	500m	5	F	D0011	TO72
73	FSA1410M		ARR	350m	2	60	8-1	A	1.5	500m	50n	500m	50m	100n	40	600m	5	F	D003m	TO96
74	FSA1411M		ARR	350m	2	60	8-1	K	1.5	500m	50n	500m	50m	100n	40	600m	5	F	D002m	TO96
75	FSA2002M		ARR	350m	2	60	8-1	K	1.5	500m	50n	500m	50m	100n	40	600m	5	F	D003a	TO85
76	FSA2003M		ARR	350m	2	60	8-1	A	1.5	500m	50n	500m	50m	100n	40	600m	5	F	D003	TO85
77	FSA2500M		ARR	350m	2A	60	16-1	D	1.5	500m	50n	500m	50m	100n	50	400m	5	F	D001	FP26f
78	FSA2501M		ARR	350m	2A	60	16-1	D	1.5	500m	50n	500m	50m	100n	50	400m	5	F	D001a	DL14ad
79	FSA2501P		ARR	350m	2	60	16-1	D	1.0	100m	50n	500m	50m	100n	50	650m	5	F	D001a	TO85
80	FSA2502M		ARR	350m	2A	60	16-1	D	1.5	500m	50n	500m	50m	100n	50	400m	5	F	D001b	TO100
81	FSA2503M		ARR	350m	2A	60	8-2	D	1.5	500m	50n	500m	50m	100n	50	400m	5	F	D004	DL14ad
82	FSA2503P		ARR	350m	2	60	8-2	D	1.0	100m	50n	500m	50m	100n	50	650m	5	F	D004	TO116
83	FSA2504M		ARR	350m	2A	60	8-2	D	1.5	500m	50n	500m	50m	100n	50	400m	5	F	D004	FP21h
84	FSA2509M		ARR	350m	2	60	8-2	D	1.3	500m	50n	500m	50m	100n	40	650m	5	F	D004	TO116
85	FSA2509P		ARR	350m	2	60	8-2	D	1.3	500m	50n	500m	50m	100n	40	650m	5	F	D004	TO116
86	FSA2510M		ARR	350m	2A	60	16-1	D	1.3	500m	50n	500m	50m	100n	40	650m	5	F	D0012a	TO116
87	FSA2510P		ARR	350m	2	60	16-1	D	1.3	500m	50n	500m	50m	100n	40	650m	5	F	D0012a	TO116
88	FSA2563M		ARR	350m	2	60	8-1	K	1.0	100m	50n	500m	50m	100n	40	650m	5	F	D0019	TO116
89	FSA2563P		ARR	350m	2	60	8-1	K	1.0	100m	50n	500m	50m	100n	40	650m	5	F	D0019	TO116
90	FSA2564M		ARR	350m	2	60	8-1	A	1.0	100m	50n	500m	50m	100n	40	650m	5	F	D0019a	TO116
91	FSA2564P		ARR	350m	2	60	8-1	A	1.0	100m	50n	500m	50m	100n	40	650m	5	F	D0019a	TO116
92	FSA2565P		ARR	350m	2	60	13-1	K	1.0	100m	50n	500m	50m	100n	40	650m	5	F	D0021	DL16co
93	FSA2566M		ARR	350m	2	60	13-1	A	1.0	100m	50n	500m	50m	100n	40	650m	5	F	D0021a	DL16cp
94	FSA2566P		ARR	350m	2	60	13-1	A	1.0	100m	50n	500m	50m	100n	40	650m	5	F	D0021a	DL16co
95	FSA2619M		ARR	350m	2	100	1-8	I	1.0	10m	5.0n	10m	10m	5.0u	75	650m	5	F	D005a	DL16cj
96	FSA2619P		ARR	350m	2	100	1-8	I	1.0	10m	5.0n	10m	10m	5.0u	75	650m	5	F	D005a	DL16co
97	FSA2620M		ARR	350m	2	100	1-7	I	1.0	10m	5.0n	10m	10m	5.0u	75	650m	5	F	D005b	TO116
98	FSA2620P		ARR	350m	2	100	1-7	I	1.0	10m	5.0n	10m	10m	5.0u	75	650m	5	F	D005b	TO116
99	FSA2621M		ARR	350m	2	100	1-7	I	1.0	10m	4.0n			5.0u	75	650m	5	F		FP21h
100	FSA2719M		ARR	350m	2	75	1-8	I	1.0	10m	6.0n	10m	10m	100n	50	650m	5	F	D005a	DL16cj
101	FSA2719P		ARR	350m	2	75	1-8	I	1.0	10m	6.0n	10m	10m	100n	50	650m	5	F	D005a	DL16co
102	FSA2720M		ARR	350m	2	75	1-7	I	1.0	10m	4.0n	10m	10m	100n	50	650m	5	F	D005b	TO116
103	FSA2720P		ARR	350m	2	75	1-7	I	1.0	10m	6.0n	10m	10m	100n	50	650m	5	F	D005b	TO116
104	FSA2721M		ARR	350m	2	75	1-7	I	1.0	10m	4.0n	10m	10m	100n	50	650m	5	F	D005b	TO86
105	BAT21E		ARR	400m	2	60	16-1	D	1.0	100m	20n	200m	200m	100n	40	600m	5	C	D001a	DL18h
106	BAT21J		ARR	400m	2	60	16-1	D	1.0	100m	20n	200m	200m	100n	40	600m	6	F	D001aa	DL18h
107	BAT22E		ARR	400m	2	40	16-1	D	1.1	100m	20n	200m	200m	100n	25	600m	5	C	D001aa	DL18h
108	BAT22J		ARR	400m	2	40	16-1	D	1.1	100m	20n	200m	200m	100n	25	600m	6	F	D001a	DL18h
109	BAT25E		ARR	400m	2	60	16-2	D	1.0	100m	20n	200m	200m	100n	40	600m	5	C	D004	DL18h
110	BAT25J		ARR	400m	2	60	16-2	D	1.0	100m	20n	200m	200m	100n	40	600m	6	F	D004	DL18h

SYMBOLS AND CODES EXPLAINED IN INTERPRETER

6. DIODE ARRAYS & MATRICES - Array (Cont'd)

IN ORDER OF:(1)TYPE CODE(2)MAX.FWD.CURR. (3)Vrrm(4)TYPE NO.

LINE No.	4 TYPE NUMBER	DATA SHT.	1 TYPE CODE	2 MAX. FORWARD CURRENT (A)	@ °C	3 Vrrm (V)	DIODE/ CKT. NO. OF CKTS.	CONN	VF MAX (V)	@ IF (A)	MAXIMUM REVERSE RECOVERY TIME trr (s)	IF (A)	Ir (A)	MAX.STATIC REVERSE CURRENT (A)	@ Vr (V)	PD RATED MAX (W)	OPER. TEMP. RANGE CODE -	+	DRAWINGS CIRCUIT	OUTLINE
1	BAT26E		ARR	400m	2	40	16-2	D	1.1	100m	20n	200m	200m	100n	25	600m	5	C	D004	DL18h
2	BAT26J		ARR	400m	2	40	16-2	D	1.1	100m	20n	200m	200m	100n	25	600m	6	F	D004	DL18h
3	TND933		ARR	400m	2A	60	8-1	N	1.0	100m	20n	200m	200m	100n	40	2.0	5	F	D00-30	TO116
4	TND938		ARR	400m	2A	60	8-1	N	1.0	100m	20n	200m	200m	100n	40	2.0	5	F	D00-30a	TO116
5	TND939		ARR	400m	2A	40	8-1	N	1.0	100m	20n	200m	200m	100n	25	2.0	5	F	D00-30a	TO116
6	TND940		ARR	400m	2A	40	8-1	N	1.0	100m	20n	200m	200m	100n	25	2.0	5	F	D00-30	TO116
7	TND903		ARR	500m	2A	75	1-8	I	1.0	100m	4.0n	10m	10m	100n	50	5.0	5	F	D00-5a	TO116
8	TND905		ARR	500m	2A	100	15-1	N	1.0	10m	4.0n	10m	10m	25n	20	2.0	5	F	D00-31	TO116
9	TND908		ARR	500m	2A	100	1-8	I	1.0	10m	4.0n	10m	10m	25n	20	2.0	5	F	D00-5a	TO116
10	TND918		ARR	500m	2A	75	1-8	I	1.0	50m	4.0n	10m	10m	100n	25	2.0	5	F	D00-5a	TO116
11	TND921		ARR	500m	2A	75	1-8	I	1.0	100m	4.0n	10m	10m	100n	50	2.0	5	F	D00-5a	TO116
12	TND942		ARR	500m	2A	75	15-1	N	1.0	10m	4.0n	10m	10m	25n	20	2.0	5	F	D00-31a	TO116
13	UC1610(M)		ARR	1.0		50	8-1		1.3	1.0	15n	500m	500m	1.0m	40	1.0	5	C	D00-32	DL8Ø
14	1DMB10		ARR	1.0	2S	100	4-1	B	1.0	0.5				10u	100		4	F		M1229 †
15	1DMB20		ARR	1.0	2S	200	4-1	B	1.0	0.5				10u	200		4	F		M1229 †
16	1DMB40		ARR	1.0	2S	400	4-1	B	1.0	0.5				10u	400		4	F		M1229 †
17▼	CS299DI		ARR	2	7A	50	2-4	B	1.3	1.0				100u	40	1.0	2	8	D00-32	DL8a
18	UC3610(M)		ARR	3.0		50	8-1		1.3	1.0	15n	500m	500m	1.0m	40	1.0	0	7	D00-32	DL8Ø
19▼	CS299DC		ARR	3	7A	50	2-4	B	1.3	1.0				100u	40	1.0	0	7	D00-32	DL8b
20▼	SRB0705	2.0	ARR	7.0		50			1.2	125										T03
21▼	SRB0710	2.0	ARR	7.0		100			1.2	125										T03
22▼	SRB0720	2.0	ARR	7.0		200			1.2	125										T03
23▼	SRB0740	2.0	ARR	7.0		400			1.2	125										T03
24▼	SRB0760	2.0	ARR	7.0		600			1.2	125										T03
25▼	SRB0780	2.0	ARR	7.0		800			1.2	125										T03
26▼	SRB07100	2.0	ARR	7.0		1.0k			1.2	125										T03
27▼	SRB1505	2.0	ARR	15		50			1.2	175										T03
28▼	SRB1510	2.0	ARR	15		100			1.2	175										T03
29▼	SRB1520	2.0	ARR	15		200			1.2	175										T03
30▼	SRB1540	2.0	ARR	15		400			1.2	175										T03
31▼	SRB1560	3.0	ARR	15		600			1.2	175										T03
32▼	SRB1580	3.0	ARR	15		800			1.2	175										T03
33▼	SRB15100	3.0	ARR	15		1.0k			1.2	175										T03
34♦	SRB3005	3.0	ARR	30		50			1.3	250										T03
35▼	SRB3010	3.0	ARR	30		100			1.3	250										T03
36▼	SRB3020	3.0	ARR	30		200			1.3	250										T03
37▼	SRB3040	3.0	ARR	30		400			1.3	250										T03
38▼	SRB3060	3.0	ARR	30		600			1.3	250										T03
39▼	SRB3080	3.0	ARR	30		800			1.3	250										T03
40▼	SRB30100	3.0	ARR	30		1.0k			1.3	250										T03

DIODE MATRIX

44	DS8656N		MAT			35	3x4		1.5	50m	1.0u	50m	0.1m				0	7	D00-23	DL16au
45	S353		MAT	2.0m			160	A	1.5	1.0m				100n	10		2	7	D00-27	DL28p
46	HM0104-2		MAT	100m		30	10-4	N	1.5	20m	100n	10m	10m			450m	6	F	D00-14	DL14
47	HM0104-5		MAT	100m		30	10-4	N	1.5	20m	50n	10m	10m			450m	6	F	D00-14	DL14
48	HM0104-8		MAT	100m		30	10-4	N	1.5	20m	100n	10m	10m			450m	6	F	D00-14	DL14
49	HM0168-2		MAT	100m		30	6-8	N	1.5	20m	100n	10m	10m			450m	6	F	D00-10b	DL14
50	HM0168-5		MAT	100m		30	6-8	N	1.5	20m	50n	10m	10m			450m	6	F	D00-10b	DL14
51	HM0168-8		MAT	100m		30	6-8	N	1.5	20m	100n	10m	10m			450m	6	F	D00-10b	DL14
52	HM0186-2		MAT	100m		30	8-6	N	1.5	20m	100n	10m	10m			450m	6	F	D00-10c	DL14
53	HM0186-5		MAT	100m		30	8-6	N	1.5	20m	50n	10m	10m			450m	6	F	D00-10c	DL14
54	HM0186-8		MAT	100m		30	8-6	N	1.5	20m	100n	10m	10m			450m	6	F	D00-10c	DL14
55	HM0198-2		MAT	100m		30	9-8	N	1.5	20m	100n	10m	10m			450m	6	F	D00-18	DL18
56	HM0198-5		MAT	100m		30	9-8	N	1.5	20m	50n	10m	10m			450m	6	F	D00-18	DL18
57	HM0198-8		MAT	100m		30	9-8	N	1.5	20m	100n	10m	10m			450m	6	F	D00-18	DL18
58	HM0410-2		MAT	100m		30	4-10	N	1.5	20m	100n	10m	10m			450m	6	F	D00-15	DL14
59	HM0410-5		MAT	100m		30	4-10	N	1.5	20m	50n	10m	10m			450m	6	F	D00-15	DL14
60	HM0410-8		MAT	100m		30	4-10	N	1.5	20m	100n	10m	10m			450m	6	F	D00-15	DL14

IN ORDER OF (1) TYPE (2) MAT AND (3) TYPE NO.

BIPOLAR & UNIPOLAR TYPES

LINE No.	3 TYPE NUMBER	1 TYPE	2 MAT.	DWG. NO.	DESCRIPTION
4	1N5555	6		DO13	Voltage Transient-Suppressor;PP-1.5kW,Pd-1.0W;VR-30.5V;Ipp-32A;IR at VR-5.0uA.
5	1N5556	6		DO13	Voltage Transient-Suppressor;PP-1.5kW,Pd-1.0W;VR-40.3V;Ipp-24A;IR at VR-5.0uA.
6	1N5557	6		DO13	Voltage Transient-Suppressor;PP-1.5kW,Pd-1.0W;VR-49V;Ipp-19A;IR at VR-5.0uA.
7	1N5558	6		DO13	Voltage Transient-Suppressor;PP-1.5kW,Pd-1.0W;VR-175V;Ipp-5.7A;IR at VR-5.0uA.
8	1N5611	6		A1dy	VZ(min)43.7V;IZT 1.0mA;VR40.3V;IR5.0uA;IS24A;VZ(max)63.5V.
9	1.5KE6V8A	6		A398k	1.0mA IRM at 5.8V;7.14 max V(BR) at 10mA IR;10.5V(CL) at 143A Ipp
10	1.5KE6V8CA	6		A398k	2.0mA IRM at 5.8V;7.14 max V(BR) at 10mA IR;10.5V(CL) at 143A Ipp
11	1.5KE6V8CP	6		A398k	2.0mA IRM at 5.8V;7.48 max V(BR) at 10mA IR;10.5V(CL) at 143A Ipp
12	1.5KE6V8P	6		A398k	1.0mA IRM at 5.8V;7.48 max V(BR) at 10mA IR;10.5V(CL) at 143A Ipp
13♦	1.5KE7V5A	6		A398k	1.0mA IRM at 6.4V; 7.88 max V(BR) at 10mA IR;11.3V(CL) at 132A Ipp
14	1.5KE7V5CA	6		A398k	2.0mA IRM at 6.4V;7.88 max V(BR) at 10mA IR;11.3V(CL) at 132A Ipp
15	1.5KE7V5CP	6		A398k	2.0mA IRM at 6.4V;8.25 max V(BR) at 10mA IR;11.3V(CL) at 132A Ipp
16	1.5KE7V5P	6		A398k	1.0mA IRM at 6.5V;8.25 max V(BR) at 10mA IR;11.3V(CL) at 132A Ipp
17	1.5KE8V2A	6		A398k	200uA IRM at 7.02;8.61 max V(BR) at 10mA IR;12.1V(CL) at 124A Ipp
18	1.5KE8V2CA	6		A398k	400uA IRM at 7.02;8.61 max V(BR) at 10mA IR;12.1V(CL) at 124A Ipp
19	1.5KE8V2CP	6		A398k	400uA IRM at 7.02;9.02 max V(BR) at 10mA IR;12.1V(CL) at 124A Ipp
20	1.5KE8V2P	6		A398k	200uA IRM at 7.02;9.02 max V(BR) at 10mA IR;12.1V(CL) at 124A Ipp
21	1.5KE9V1A	6		A398k	50uA IRM at 7.78VRM;9.55V max V(BR) at 1.0mA IR;13.4V(CL) at 112A Ipp
22	1.5KE9V1CA	6		A398k	100uA IRM at 7.78VRM;9.55V max V(BR) at 1.0mA IR;13.4V(CL) at 112A Ipp
23	1.5KE9V1CP	6		A398k	100uA IRM at 7.78VRM;10V max V(BR) at 1.0mA IR;13.4V(CL) at 112A Ipp
24	1.5KE9V1P	6		A398k	50uA IRM at 7.78VRM;10V max V(BR) at 1.0mA IR;13.4V(CL) at 112A Ipp
25	1.5KE10CP	6		A398k	20uA IRM at 8.55VRM;11V max V(BR) at 1.0mA IR;14.5V(CL) at 103A Ipp
26	1.5KE10P	6		A398k	10uA IRM at 8.55VRM;11V max V(BR) at 1.0mA IR;14.5V(CL) at 103A Ipp
27	1.5KE11CP	6		A398k	10uA IRM at 9.4VRM;12.1V max V(BR) at 1.0mA IR;15.6V(CL) at 96A Ipp
28	1.5KE11P	6		A398k	5.0uA IRM at 9.4VRM;12.1V max V(BR) at 1.0mA IR;15.6V(CL) at 96A Ipp
29	1.5KE12CA	6		A398k	5.0uA IRM at 10.2VRM;12.6V max V(BR) at 1.0mA IR;16.7V(CL at 90A Ipp
30	1.5KE12CP	6		A398k	5.0uA IRM at 10.2VRM;13.2V max V(BR) at 1.0mA IR;16.7V(CL at 90A Ipp
31	1.5KE12P	6		A398k	5.0uA IRM at 10.2VRM;13.2V max V(BR) at 1.0mA IR;16.7V(CL at 90A Ipp
32	1.5KE13CA	6		A398k	5.0uA IRM at 11.1VRM;13.7V(BR) at 1.0mA IR;18.2V(CL) at 82A Ipp
33	1.5KE13CP	6		A398k	5.0uA IRM at 11.1VRM;14.3V(BR) at 1.0mA IR;18.2V(CL) at 82A Ipp
34	1.5KE13P	6		A398k	5.0uA IRM at 11.1VRM;14.3V max V(BR) at 1.0mA IR;18.2V(CL at 82A Ipp
35	1.5KE15CA	6		A398k	5.0uA IRM at 12.8VRM;15.8V(BR) at 1.0mA IR;21.2V(CL) at 71A Ipp
36	1.5KE15CP	6		A398k	5.0uA IRM at 12.8VRM;16.5V(BR) at 1.0mA IR;21.2V(CL) at 71A Ipp
37	1.5KE15P	6		A398k	5.0uA IRM at 12.8VRM;16.5V(BR) at 1.0mA IR;21.2V(CL) at 71A Ipp
38	1.5KE16CA	6		A398k	5.0uA IRM at 13.6VRM;16.8V(BR) at 1.0mA IR;22.5V(CL) at 67A Ipp
39	1.5KE16CP	6		A398k	5.0uA IRM at 13.6VRM;17.6V(BR) at 1.0mA IR;22.5V(CL) at 67A Ipp
40	1.5KE16P	6		A398k	5.0uA IRM at 13.6VRM;17.6V(BR) at 1.0mA IR;22.5V(CL) at 67A Ipp
41♦	1.5KE18CA	6		A398k	5.0uA IRM at 15.3VRM;18.9V(BR) max at 1.0mA IR;25.2V(CL) at 59.5A Ipp
42♦	1.5KE18CP	6		A398k	5.0uA IRM at 15.3VRM;19.8V(BR) max at 1.0mA IR;25.2V(CL) at 59.5A Ipp
43♦	1.5KE18P	6		A398k	5.0uA IRM at 15.3VRM;19.8V(BR) max at 1.0mA IR;25.2V(CL) at 59.5A Ipp
44	1.5KE20CA	6		A398k	5.0uA IRM at 17.1VRM;21V(BR) max at 1.0mA IR;27.7V(CL() at 54A Ipp
45	1.5KE20CP	6		A398k	5.0uA IRM at 17.1VRM;22V(BR) max at 1.0mA IR;27.7V(CL() at 54A Ipp
46	1.5KE20P	6		A398k	5.0uA IRM at 17.1VRM;22V(BR) at 1.0mA IR;27.7V(CL) at 54A Ipp
47	1.5KE22CA	6		A398k	5.0uA IRM at 18.8VRM;23.1V(BR) max at 1.0mA IR;30.6V(CL) at 49A Ipp
48	1.5KE22CP	6		A398k	5.0uA IRM at 18.8VRM;24.2V(BR) max at 1.0mA IR;30.6V(CL) at 49A Ipp
49	1.5KE22P	6		A398k	5.0uA IRM at 18.8VRM;24.2V(BR) max at 1.0mA IR;30.6V(CL) at 49A Ipp
50	1.5KE24CA	6		A398k	5.0uA IRM at 20.5VRM;25.2V(BR) max at 1.0mA IR;33.2V(CL) at 45A Ipp
51	1.5KE24CP	6		A398k	5.0uA IRM at 20.5VRM;26.4V(BR) max at 1.0mA IR;33.2V(CL) at 45A Ipp
52	1.5KE24P	6		A398k	5.0uA IRM at 20.5VRM;26.4V(BR) max at 1.0mA IR;33.2V(CL) at 45A Ipp
53	1.5KE27CA	6		A398k	5.0uA IRM at 23.1VRM;28.4V(BR) max at 1.0mA IR;37.5V(CL) at 40A Ipp
54	1.5KE27CP	6		A398k	5.0uA IRM at 23.1VRM;29.7V(BR) max at 1.0mA IR;37.5V(CL) at 40A Ipp
55	1.5KE27P	6		A398k	5.0uA IRM at 23.1VRM;29.7V(BR) max at 1.0mA IR;37.5V(CL) at 40A Ipp
56	1.5KE30CA	6		A398k	5.0uA IRM at 25.6VRM;31.5V(BR) max at 1.0mA IR;41.4V(CL) at 36A Ipp
57	1.5KE30CP	6		A398k	5.0uA IRM at 25.6VRM;33V(BR) max at 1.0mA IR;41.4V(CL) at 36A Ipp
58	1.5KE30P	6		A398k	5.0uA IRM at 25.6VRM;33V(BR) max at 1.0mA IR;41.4V(CL) at 36A Ipp
59	1.5KE33CA	6		A398k	5.0uA IRM at 28.2VRM;34.7V(BR) max at 1.0mA IR;45.7V(CL) at 33A Ipp
60	1.5KE33CP	6		A398k	5.0uA IRM at 28.2VRM;36.3V(BR) max at 1.0mA IR;45.7V(CL) at 33A Ipp
61	1.5KE33P	6		A398k	5.0uA IRM at 28.2VRM;36.3V(BR) max at 1.0mA IR;45.7V(CL) at 33A Ipp
62	1.5KE36CA	6		A398k	5.0uA IRM at 30.8VRM;37.8V(BR) max at 1.0mA IR;49.9V(CL) at 30A Ipp
63	1.5KE36CP	6		A398k	5.0uA IRM at 30.8VRM;39.6V(BR) max at 1.0mA IR;49.9V(CL) at 30A Ipp
64	1.5KE36P	6		A398k	5.0uA IRM at 30.8VRM;39.6V(BR) max at 1.0mA IR;49.9V(CL) at 30A Ipp
65	1.5KE39CA	6		A398k	5.0uA IRM at 33.3VRM;41V(BR) max at 1.0mA IR;53.9V(CL) at 28A Ipp
66	1.5KE39CP	6		A398k	5.0uA IRM at 33.3VRM;42.9V(BR) max at 1.0mA IR;53.9V(CL) at 28A Ipp
67	1.5KE39P	6		A398k	5.0uA IRM at 33.3VRM;42.9V(BR) max at 1.0mA IR;53.9V(CL) at 28A Ipp
68	1.5KE43CA	6		A398k	5.0uA IRM at 36.8VRM;45.2V(BR) max at 1.0mA IR;59.3V(CL) at 25.3A Ipp
69	1.5KE43CP	6		A398k	5.0uA IRM at 36.8VRM;47.3V(BR) max at 1.0mA IR;59.3V(CL) at 25.3A Ipp
70	1.5KE43P	6		A398k	5.0uA IRM at 36.8VRM;47.3V(BR) max at 1.0mA IR;59.3V(CL) at 25.3A Ipp
71	1.5KE47CA	6		A398k	5.0uA IRM at 40.2VRM;49.4V(BR) max at 1.0mA IR;64.8V(CL) at 24.2A Ipp
72	1.5KE47CP	6		A398k	5.0uA IRM at 40.2VRM;51.7V(BR) max at 1.0mA IR;64.8V(CL) at 24.2A Ipp
73	1.5KE47P	6		A398k	5.0uA IRM at 40.2VRM;51.7V(BR) max at 1.0mA IR;64.8V(CL) at 24.2A Ipp
74	1.5KE51CA	6		A398k	5.0uA IRM at 43.6VRM;53.6V(BR) max at 1.0mA IR;70.1V(CL) at 21.4A Ipp
75	1.5KE51CP	6		A398k	5.0uA IRM at 43.6VRM;56.1V(BR) max at 1.0mA IR;70.1V(CL) at 21.4A Ipp
76	1.5KE51P	6		A398k	5.0uA IRM at 43.6VRM;56.1V(BR) max at 1.0mA IR;70.1V(CL) at 21.4A Ipp
77	1.5KE56CA	6		A398k	5.0uA IRM at 47.8VRM;58.8V(BR) max at 1.0mA IR;77V(CL) at 19.5A Ipp
78	1.5KE56CP	6		A398k	5.0uA IRM at 47.8VRM;61.6V(BR) max at 1.0mA IR;77V(CL) at 19.5A Ipp
79	1.5KE56P	6		A398k	5.0uA IRM at 47.8VRM;61.6V(BR) max at 1.0mA IR;77V(CL) at 19.5A Ipp
80	1.5KE62CA	6		A398k	5.0uA IRM at 53VRM;65.1V(BR) max at 1.0mA IR;85V(CL) at 17.7A Ipp
81	1.5KE62CP	6		A398k	5.0uA IRM at 53VRM;68.2V(BR) max at 1.0mA IR;85V(CL) at 17.7A Ipp
82	1.5KE62P	6		A398k	5.0uA IRM at 53VRM;68.2V(BR) max at 1.0mA IR;85V(CL) at 17.7A Ipp
83	1.5KE68CA	6		A398k	5.0uA IRM at 58.1VRM;71.4V(BR) max at 1.0mA IR;92V(CL) at 16.3A Ipp
84	1.5KE68CP	6		A398k	5.0uA IRM at 58.1VRM;74.8V(BR) max at 1.0mA IR;92V(CL) at 16.3A Ipp
85	1.5KE68P	6		A398k	5.0uA IRM at 58.1VRM;74.8V(BR) max at 1.0mA IR;92V(CL) at 16.3A Ipp
86	1.5KE75CA	6		A398k	5.0uA IRM at 64.1VRM;78.8V(BR) max at 1.0mA IR;103V(CL) at 14.6A Ipp
87	1.5KE75CP	6		A398k	5.0uA IRM at 64.1VRM;82.5V(BR) max at 1.0mA IR;103V(CL) at 14.6A Ipp
88	1.5KE75P	6		A398k	5.0uA IRM at 64.1VRM;82.5V(BR) max at 1.0mA IR;103V(CL) at 14.6A Ipp
89	1.5KE82CA	6		A398k	5.0uA IRM at 70.1VRM;86.1V(BR) max at 1.0mA IR;113V(CL) at 13.3A Ipp
90	1.5KE82CP	6		A398k	5.0uA IRM at 70.1VRM;90.2V(BR) max at 1.0mA IR;113V(CL) at 13.3A Ipp
91	1.5KE82P	6		A398k	5.0uA IRM at 70.1VRM;90.2V(BR) max at 1.0mA IR;113V(CL) at 13.3A Ipp
92	1.5KE91CA	6		A398k	IRM 5.0uA at 77.8VRM;95.5V(BR) max at IR 1.0mA;125V(CL) at Ipp 12A
93	1.5KE91CP	6		A398k	IRM 5.0uA at 77.8VRM;100V(BR) max at IR 1.0mA;125V(CL) at Ipp 12A
94	1.5KE91P	6		A398k	5.0uA IRM at 77.8VRM;100V(BR) max at 1.0mA IR;125V(CL) at Ipp 12A
95	1.5KE100CA	6		A398k	IRM 5.0uA at 85.5VRM;105V(BR) max at IR 1.0mA;137V(CL) at Ipp 11A
96	1.5KE100CP	6		A398k	IRM 5.0uA at 85.5VRM;110V(BR) max at IR 1.0mA;137V(CL) at Ipp 11A
97	1.5KE100P	6		A398k	IRM 5.0uA at 85.5VRM;110V(BR) max at IR 1.0mA;137V(CL) at Ipp 11A
98	1.5KE110CA	6		A398k	IRM 5.0uA at 94VRM;116V(BR) max at IR 1.0mA;152V(CL) at Ipp 9.9A
99	1.5KE110CP	6		A398k	IRM 5.0uA at 94VRM;121V(BR) max at IR 1.0mA;152V(CL) at Ipp 9.9A
100	1.5KE110P	6		A398k	IRM 5.0uA at 94VRM;121V(BR) max at IR 1.0mA;152V(CL) at Ipp 9.9A
101	1.5KE120CA	6		A398k	IRM 5.0uA at 102VRM;126V(BR) max at IR 1.0mA;165V(CL) at Ipp 9.1A
102	1.5KE120CP	6		A398k	IRM 5.0uA at 102VRM;132V(BR) max at IR 1.0mA;165V(CL) at Ipp 9.1A
103	1.5KE120P	6		A398k	IRM 5.0uA at 102VRM;132V(BR) max at IR 1.0mA;165V(CL) at Ipp 9.1A
104	1.5KE130CA	6		A398k	IRM 5.0uA at 111VRM;137V(BR) max at IR 1.0mA;179V(CL) at Ipp 8.4A
105	1.5KE130CP	6		A398k	IRM 5.0uA at 111VRM;143V(BR) max at IR 1.0mA;179V(CL) at Ipp 8.4A
106	1.5KE130P	6		A398k	IRM 5.0uA at 111VRM;143V(BR) max at IR 1.0mA;179V(CL) at Ipp 8.4A
107	1.5KE180CA	6		A398k	IRM 5.0uA at 154VRM;189V(BR) max at IR 1.0mA;246V(CL) at Ipp 6.1A
108	1.5KE180CP	6		A398k	IRM 5.0uA at 154VRM;198V(BR) max at IR 1.0mA;246V(CL) at Ipp 6.1A
109	1.5KE200CA	6		A398k	IRM 5.0uA at 171VRM;210V(BR) max at IR 1.0mA;274V(CL) at Ipp 5.5A
110	1.5KE200CP	6		A398k	IRM 5.0uA at 171VRM;220V(BR) max at IR 1.0mA;274V(CL) at Ipp 5.5A

SYMBOLS AND CODES EXPLAINED IN INTERPRETER

7. TRANSIENT SUPPRESSOR DIODES - Bipolar & Unipolar Types (Cont'd)

IN ORDER OF (1) TYPE (2) MAT AND (3) TYPE NO.

LINE No.	3 TYPE NUMBER	1 TYPE	2 MAT.	DWG. NO.	DESCRIPTION
1	1.5KE200P	6		A398k	IRM 5.0uA at 171VRM;220V(BR) max at IR 1.0mA;274V(CL) at Ipp 5.5A
2	1.5KE220CA	6		A398k	IRM 5.0uA at 185VRM;231V(BR) max at IR 1.0mA;328V(CL) at Ipp 4.6A
3	1.5KE220CP	6		A398k	IRM 5.0uA at 185VRM;242V(BR) max at IR 1.0mA;328V(CL) at Ipp 4.6A
4	1.5KE220P	6		A398k	IRM 5.0uA at 185VRM;242V(BR) max at IR 1.0mA;328V(CL) at Ipp 4.6A
5	1.5KE250CA	6		A398k	IRM 5.0uA at 213VRM;263V(BR) max at IR 1.0mA;344V(CL) at Ipp 5.0A
6	1.5KE250CP	6		A398k	IRM 5.0uA at 213VRM;275V(BR) max at IR 1.0mA;344V(CL) at Ipp 5.0A
7	1.5KE250P	6		A398k	IRM 5.0uA at 213VRM;275V(BR) max at IR 1.0mA;344V(CL) at Ipp 5.0A
8	1.5KE280A	6		A398k	IRM 5.0uA at 239VRM;294V(BR) max at IR 1.0mA;384V(CL) at Ipp 5.0A
9	1.5KE280CA	6		A398k	IRM 5.0uA at 239VRM;294V(BR) max at IR 1.0mA;384V(CL) at Ipp 5.0A
10	1.5KE280CP	6		A398k	IRM 5.0uA at 239VRM;308V(BR) max at IR 1.0mA;384V(CL) at Ipp 5.0A
11	1.5KE280P	6		A398k	IRM 5.0uA at 239VRM;308V(BR) max at IR 1.0mA;384V(CL) at Ipp 5.0A
12	1.5KE300CA	6		A398k	IRM 5.0uA at 256VRM;315V(BR) max at IR 1.0mA;414V(CL) at Ipp 5.0A
13	1.5KE300CP	6		A398k	IRM 5.0uA at 256VRM;330V(BR) max at IR 1.0mA;414V(CL) at Ipp 5.0A
14	1.5KE300P	6		A398k	IRM 5.0uA at 256VRM;330V(BR) max at IR 1.0mA;414V(CL) at Ipp 5.0A
15	1.5KE320A	6		A398k	IRM 5.0uA at 273VRM;336V(BR) max at IR 1.0mA;438V(CL) at Ipp 4.5A
16	1.5KE320CA	6		A398k	IRM 5.0uA at 273VRM;336V(BR) max at IR 1.0mA;438V(CL) at Ipp 4.5A
17	1.5KE320CP	6		A398k	IRM 5.0uA at 273VRM;352V(BR) max at IR 1.0mA;438V(CL) at Ipp 4.5A
18	1.5KE320P	6		A398k	IRM 5.0uA at 273VRM;352V(BR) max at IR 1.0mA;438V(CL) at Ipp 4.5A
19	1.5KE350CA	6		A398k	IRM 5.0uA at 299 VRM;368 V(BR) max at IR 1.0mA;482 V(CL) at Ipp 4.0A
20	1.5KE350CP	6		A398k	IRM 5.0uA at 299VRM;385V(BR) max at IR 1.0mA;482V(CL) at Ipp 4.0A
21	1.5KE350P	6		A398k	IRM 5.0uA at 299VRM;385V(BR) max at IR 1.0mA;482V(CL) at Ipp 4.0A
22	1.5KE400CA	6		A398k	IRM 5.0uA at 342 VRM;420 V(BR) max at IR 1.0mA;548 V(CL) at Ipp 4.0A
23	1.5KE400CP	6		A398k	IRM 5.0uA at 342 VRM;440 V(BR) max at IR 1.0mA;548 V(CL) at Ipp 4.0A
24	1.5KE400P	6		A398k	IRM 5.0uA at 342 VRM;440 V(BR) max at IR 1.0mA;548 V(CL) at Ipp 4.0A
25	1.5KE440A	6		A398k	IRM 5.0uA at 376 VRM;462 V(BR) max at IR 1.0mA;603 V(CL) at Ipp 3.5A
26	1.5KE440CA	6		A398k	IRM 5.0uA at 376 VRM;462 V(BR) max at IR 1.0mA;603 V(CL) at Ipp 3.5A
27	1.5KE440CP	6		A398k	IRM 5.0uA at 376 VRM;484 V(BR) max at IR 1.0mA;603 V(CL) at Ipp 3.5A
28	1.5KE440P	6		A398k	IRM 5.0uA at 376 VRM;484 V(BR) max at IR 1.0mA;603 V(CL) at Ipp 3.5A
29	1.5SE6.8	6		A69j	VR 5.5V;VB 6.12-7.48V at IT 10mA;IR 1mA max;IPP 139A;TC .057%/°C
30	1.5SE6.8A	6		A69j	VR 5.8V;VB 6.45-7.14V at IT 10mA;IR 1mA max;IPP 143A;TC .057%/°C
31	1.5SE9.1	6		A69j	VR 7.37V;VB 8.19-10V at IT 1mA;IR 50uA max;IPP 109A;TC .068%/°C
32	1.5SE9.1A	6		A69j	VR 7.78V;VB 8.65-9.55V at IT 1mA;IR 50uA max;IPP 112A;TC .068%/°C
33	1.5SE10A	6		A69j	VR 8.55V;VB 9.5-10.5V at IT 1mA;IR 10uA max;IPP 103A;;tc .073%/°C
34	1.5SE11	6		A69j	VR 8.92V;VB 9.9-12.1V at IT 1mA;IR 5uA max;IPP 93A;TC .075%/°C
35	1.5SE11A	6		A69j	VR 9.4V;VB 10.5-11.6V at IT 1mA;IR 5uA max;IPP 96A;TC .075%/°C
36	1.5SE15	6		A69j	VR 12.1V;VB 13.5-16.5V at IT 1mA;IR 5uA max;IPP 68A;TC .084%/°C
37	1.5SE16	6		A69j	VR 12.9V;VB 14.4-17.6V at IT 1mA;IR 5uA max;IPP 64A;TC .086%/°C
38	1.5SE16A	6		A69j	VR 13.6V;VB 15.2-16.8V at IT 1mA;IR 5uA max;IPP 67A;TC .086%/°C
39	1.5SE24	6		A69j	VR 19.4V;VB 21.6-26.4V at IT 1mA;IR 5uA max;IPP 43A;TC .094%/°C
40	1.5SE24A	6		A69j	VR 20.5V;VB 22.8-25.2V at IT 1mA;IR 5uA max;IPP 45A;TC .094%/°C
41	1.5SE27	6		A69j	VR 21.8V;VB 24.3-29.7V at IT 1mA;IR 5uA max;IPP 38.5A;TC .096%/°C
42	1.5SE27A	6		A69j	VR 23.1V;VB 25.7-28.4V at IT 1mA;IR 5uA max;IPP 40A;TC .096%/°C
43	1.5SE30	6		A69j	VR 24.3V;VB 27-33V at IT 1mA;IR 5uA max;IPP 34.5A;TC .097%/°C
44	1.5SE33A	6		A69j	VR 28.2V;VB 31.4-34.7V at IT 1mA;IR 5uA max;IPP 33A;TC .098%/°C
45	1.5SE36A	6		A69j	VR 30.8V;VB 34.2-37.8V at IT 1mA;IR 5uA max;IPP 30A;TC .099%/°C
46	1.5SE39	6		A69j	VR 31.6V;VB 35.1-42.9V at IT 1mA;IR 5uA max;IPP 26.5A;TC .100%/°C
47	1.5SE43	6		A69j	VR 34.8V;VB 38.7-47.3V at IT 1mA;IR 5uA max;IPP 24A;TC .101%/°C
48	1.5SE47	6		A69j	VR 38.1V;VB 42.3-51.7V at IT 1mA;IR 5uA max;IPP 22.2A;TC .101%/°C
49	1.5SE51	6		A69j	VR 41.3V;VB 45.9-56.1V at IT 1mA;IR 5uA max;IPP 20.4A;TC .102%/°C
50	1.5SE51A	6		A69j	VR 43.6V;VB 48.5-53.6V at IT 1mA;IR 5uA max;IPP 21.4A;TC .102%/°C
51	1.5SE62	6		A69j	VR 50.2V;VB 55.8-68.2V at IT 1mA;IR 5uA max;IPP16.9A;TC .104%/°C
52	1.5SE68	6		A69j	VR 55.1V;VB 61.2-74.8V at IT 1mA;IR 5uA max;IPP 15.3A;TC .104%/°C
53	1.5SE68A	6		A69j	VR 58.1V;VB 64.6-71.4V at IT 1mA;;r 5uA max;IPP 16.3A;TC .104%/°C
54	1.5SE82A	6		A69j	VR 70.1V;VB 77.9-86.1V at IT 1mA;IR 5uA max;IPP 13.3A;TC .105%/°C
55	1.5SE100	6		A69j	VR 81V;VB 90-110V at IT 1mA;IR 5uA max;IPP 10.4A;TC .106%/°C
56	1.5SE100A	6		A69j	VR 85.5V;VB 95-105V at IT 1mA;IR 5uA max;IPP 11A;TC .106%/°C
57	1.5SE110	6		A69j	VR 89.2V;VB 99-121V at IT 1mA;IR 5uA max;IPP 9.5A;TC .107%/°C
58	1.5SE110A	6		A69j	VR 94V;VB 105-116V at IT 1mA;IR 5uA max;IPP 9.9A;TC .107%/°C
59	1.5SE120	6		A69j	VR 97.2V;VB 108-132V at IT 1mA;IR 5uA max;IPP 8.7A;TC .107%/°C
60	1.5SE130	6		A69j	VR 105V;VB 117-143V at IT 1mA;IR 5uA max;IPP 8.0A;TC .107%/°C
61	1.5SE130A	6		A69j	VR 111V;VB 124-137V at IT 1mA;IR 5uA max;IPP 8.4A;TC .107%/°C
62	1.5SE150	6		A69j	VR 121V;VB 135-165V at IT 1mA;IR 5uA max;IPP 7.0A;TC .108%/°C
63	1.5SE160	6		A69j	VR 130V;VB 144-176V at IT 1mA;IR 5uA max;IPP 6.5A;TC .108%/°C
64	1.5SE160A	6		A69j	VR 136V;VB 152-168V at IT 1mA;IR 5uA max;IPP 6.8A;TC .108%/°C
65	1.5SE170	6		A69j	VR 138V;VB 153-187V at IT 1mA;IR 5uA max;IPP 6.2A;TC .108%/°C
66	1.5SE170A	6		A69j	VR 145V;VB 162-179V at IT 1mA;IR 5uA max;IPP 6.4A;TC .108%/°C
67	1.5SE180	6		A69j	VR 146V;VB 162-198V at IT 1mA;IR 5uA max;IPP 5.8A;TC .108%/°C
68	1.5SE180A	6		A69j	VR 154V;VB 171-189V at IT 1mA;IR 5uA max;IPP 6.1A;TC .108%/°C
69	1.5SE200A	6		A69j	VR 171V;VB 190-210V at IT 1mA;IR 5uA max;IPP 5.5A;TC .108%/°C
70	2KZ6.8	6		A3q§	Zener Klipper;VR 5.5V;Clamp Volt 10.8V at Ipp 139A;Tolerance 10%
71	2KZ6.8A	6		A3q§	Zener Klipper;VR 5.5V;Clamp Volt 10.8V at Ipp 139A;Tolerance 5%
72	2KZ6.8B	6		A3q☑	Zener Klipper;VR 5.5V;Clamp Volt 10.8V at Ipp 139A;Tolerance 20%
73	2KZ7.5	6		A3q§	Zener Klipper;VR 6.05V;Clamp Volt 11.7V at Ipp 128A;Tolerance 10%
74	2KZ7.5A	6		A3q§	Zener Klipper;VR 6.05V;Clamp Volt 11.7V at Ipp 128A;Tolerance 5%
75	2KZ7.5B	6		A3q☑	Zener Klipper;VR 6.05V;Clamp Volt 11.7V at Ipp 128A;Tolerance 20%
76	2KZ8.2	6		A3q§	Zener Klipper;VR 6.63V;Clamp Volt 12.5V at Ipp 120A;Tolerance 10%
77	2KZ8.2A	6		A3q§	Zener Klipper;VR 6.63V;Clamp Volt 12.5v at Ipp 120A;Tolerance 5%
78	2KZ8.2B	6		A3q☑	Zener Klipper;VR 6.63V;Clamp Volt 12.5V at Ipp 120A;Tolerance 20%
79	2KZ9	6		A3q☑	Zener Klipper;VR 7.37V;Clamp Volt 13.8V at Ipp 109A;Tolerance 10%
80	2KZ9A	6		A3q☑	Zener Klipper;VR 7.37V;Clamp Volt 13.8V at Ipp 109A;Tolerance 5%
81	2KZ9B	6		A3q☑	Zener Klipper;VR 7.37V;Clamp Volt 13.8V at Ipp 109A;Tolerance 20%
82	2KZ9.1	6		A3q§	Zener Klipper;Breakdown Volt Range, 8.19-10V at 1.0 mA
83	2KZ9.1A	6		A3q§	Zener Klipper;Breakdown Volt Range, 8.65-9.55 at 1.0 mA
84	2KZ10	6		A3q§	Zener Klipper;VR 8.10V;Clamp VoH 15V at Ipp 100A;Tolerance 10%
85	2KZ10A	6		A3q§	Zener Klipper;VR 8.10V;Clamp Volt 15V at Ipp 100A;Tolerance 5%
86	2KZ10B	6		A3q☑	Zener Klipper;VR 8.10V;Clamp Volt 15V at Ipp 100A;Tolerance 20%
87	2KZ11	6		A3q§	Zener Klipper;VR 8.92V;Clamp Volt 16.2V at Ipp 93A;Tolerance 10%
88	2KZ11A	6		A3q§	Zener Klipper;VR 8.92V;Clamp Volt 16.2V at Ipp 93A;Tolerance 5%
89	2KZ11B	6		A3q☑	Zener Klipper;VR 8.92V;Clamp Volt 16.2V at Ipp 93A;Tolerance 20%
90	2KZ12	6		A3q§	Zener Klipper;VR 9.72V;Clamp Volt 17.3V at Ipp 87A;Tolerance 10%
91	2KZ12A	6		A3q§	Zener Klipper;VR 9.72V;Clamp Volt 17.3V at Ipp 87A;Tolerance 5%
92	2KZ12B	6		A3q☑	Zener Klipper;VR 9.72V;Clamp Volt 17.3V at Ipp 87A;Tolerance 20%
93	2KZ13	6		A3q§	Zener Klipper;VR 10.5V;Clamp Volt 19V at Ipp 79A;Tolerance 10%
94	2KZ13A	6		A3q§	Zener Klipper;VR 10.5V;Clamp Volt 19V at Ipp 79A;Tolerance 5%
95	2KZ13B	6		A3q☑	Zener Klipper;VR 10.5V;Clamp Volt 19V at Ipp 79A;Tolerance 20%
96	2KZ15	6		A3q§	Zener Klipper;VR 12.1V;Clamp volt 22V at Ipp 68A;tolerence 10%
97	2KZ15A	6		A3q§	Zener Klipper;VR 12.1V;Clamp volt 22V at Ipp 68A;tolerence 5%
98	2KZ15B	6		A3q☑	Zener Klipper;VR 12.1V;Clamp volt 22V at Ipp 68A;tolerence 20%
99	2KZ16	6		A3q§	Zener Klipper;VR 12.9V;Clamp volt 23.5V at Ipp 64A;tolerence 10%
100	2KZ16A	6		A3q§	Zener Klipper;VR 12.9V;Clamp volt 23.5V at Ipp 64A;tolerence 5%
101	2KZ16B	6		A3q☑	Zener Klipper;VR 12.9V;Clamp volt 23.5V at Ipp 64A;tolerence 20%
102	2KZ18	6		A3q§	Zener Klipper;VR 14.5V;Clamp volt 26.5V at Ipp 56.5A;tolerence 10%
103	2KZ18A	6		A3q§	Zener Klipper;VR 14.5V;Clamp volt 26.5V at Ipp 56.5A;tolerence 5%
104	2KZ18B	6		A3q☑	Zener Klipper;VR 14.5V;Clamp volt 26.5V at Ipp 56.5A;tolerence 20%
105	2KZ20	6		A3q☑	Zener Klipper;VR 16.2V;clamp volt 29.1V at Ipp 51.5A;tolerence 10%
106	2KZ43B	6		A3q☑	Zener Klipper;VR 34.8V;Clamp volt 61.9V at Ipp 24A;tolerence 20%
107	2KZ47	6		A3q§	Zener Klipper;VR 38.1V;Clamp volt 67.8V at Ipp 22.2A;tolerence 10%
108	2KZ47A	6		A3q§	Zener Klipper;VR 38.1V;Clamp volt 67.8V at Ipp 22.2A;tolerence 5%
109	2KZ47B	6		A3q☑	Zener Klipper;VR 38.1V;Clamp volt 67.8V at Ipp 22.2A;tolerence 20%
110	2KZ51	6		A3q§	Zener Klipper;VR 41.3V;Clamp volt 73.5V at Ipp 20.4A;tolerence 10%

SYMBOLS AND CODES EXPLAINED IN INTERPRETER

7. TRANSIENT SUPPRESSOR DIODES - Bipolar & Unipolar Types (Cont'd)

IN ORDER OF (1) TYPE (2) MAT AND (3) TYPE NO.

LINE No.	3 TYPE NUMBER	1 TYPE	2 MAT.	DWG. NO.	DESCRIPTION
1	2KZ51A	6		A3q§	Zener Klipper;VR 41.3V;Clamp volt 73.5V at Ipp 20.4A;tolerence 5%
2	2KZ51B	6		A3q☑	Zener Klipper;VR 41.3V;Clamp volt 73.5V at Ipp 20.4A;tolerence 20%
3	2KZ56	6		A3q§	Zener Klipper;VR 45.4V;Clamp volt 80.5V at Ipp 18.6A;tolerence 10%
4	2KZ56A	6		A3q§	Zener Klipper;VR 45.4V;Clamp volt 80.5V at Ipp 18.6A;tolerence 5%
5	2KZ56B	6		A3q☑	Zener Klipper;VR 45.4V;Clamp volt 80.5V at Ipp 18.6A;tolerence 20%
6	2KZ62	6		A3q§	Zener Klipper;VR 50.2V;Clamp volt 89V at Ipp 16.9A;tolerence 10%
7	2KZ62B	6		A3q☑	Zener Klipper;VR 50.2V;Clamp volt 89V at Ipp 16.9A;tolerence 20%
8	2KZ68	6		A3q§	Zener Klipper;VR 55.1V;Clamp volt 98V at Ipp 15.3A;tolerence 10%
9	2KZ68A	6		A3q§	Zener Klipper;VR 55.1V;Clamp volt 98V at Ipp 15.3A;tolerence 5%
10	2KZ68B	6		A3q☑	Zener Klipper;VR 55.1V;Clamp volt 98V at Ipp 15.3A;tolerence 20%
11	2KZ75	6		A3q§	Zener Klipper;VR 60.7V;Clamp volt 10.8v at Ipp 13.9A;tolerence 10%
12	2KZ75A	6		A3q§	Zener Klipper;VR 60.7V;Clamp volt 108V at Ipp 13.9A;tolerence 5%
13	2KZ75B	6		A3q☑	Zener Klipper;VR 60.7V;Clamp volt 108V at Ipp 13.9A;tolerence 20%
14	2KZ82	6		A3q§	Zener Klipper;VR 66.4V;Clamp volt 118V at Ipp 12.7A;tolerence 10%
15	2KZ82A	6		A3q§	Zener Klipper;VR 66.4V;Clamp volt 118V at Ipp 12.7A;tolerence 5%
16	2KZ82B	6		A3q☑	Zener Klipper;VR 66.4V;Clamp volt 118V at Ipp 12.7A;tolerence 20%
17	2KZ90	6		A3q☑	Zener Klipper;VR 73.7V;Clamp volt 131V at Ipp 11.4A;tolerence 10%
18	2KZ90B	6		A3q☑	Zener Klipper;VR 73.7V;Clamp volt 131V at Ipp 11.4A;tolerence 20%
19	2KZ91	6		A3q§	Zener Klipper,Breakdown Volt Range 81.9-100V at IT 1.0mA
20	2KZ91A	6		A3q§	Zener Klipper,Breakdown Volt Range 86.5-95.5V at IT 1.0mA
21	2KZ100	6		A3q§	Zener Klipper;VR 81V;Clamp volt 144V at Ipp 10.4A;tolerence 10%
22	2KZ100A	6		A3q§	Zener Klipper;VR 81V;Clamp volt 144V at Ipp 10.4 A;tolerence 5%
23	2KZ100B	6		A3q☑	Zener Klipper;VR 81V;Clamp volt 144V at Ipp 10.4A;tolerence 20%
24	2KZ110	6		A3q§	Zener Klipper;VR 89.2V;Clamp volt 158V at Ipp 9.5A;tolerence 10%
25	2KZ110A	6		A3q§	Zener Klipper;VR 89.2V;Clamp volt 158V at Ipp 9.5A;tolerence 5%
26	2KZ110B	6		A3q☑	Zener Klipper;VR 89.2V;Clamp volt 158V at Ipp 9.5A;tolerence 20%
27	2KZ120	6		A3q§	Zener Klipper;VR 97.2V;Clamp volt 173V at Ipp 8.7A;tolerence 10%
28	2KZ120A	6		A3q☑	Zener Klipper;VR 97.2V;Clamp volt 173V at Ipp 8.7A;tolerence 5%
29	2KZ120B	6		A3q☑	Zener Klipper;VR 97.2V;Clamp volt 173V at Ipp 8.7A;tolerence 20%
30	2KZ130	6		A3q§	Zener Klipper;VR 105V;Clamp volt 187V at Ipp 8.0A;tolerence 10%
31	2KZ130A	6		A3q§	Zener Klipper;VR 105V;Clamp volt 187V at Ipp 8.0A;tolerence 5%
32	2KZ130B	6		A3q☑	Zener Klipper;VR 105V;Clamp volt 187V at Ipp 8.0A;tolerence 20%
33	2KZ150	6		A3q§	Zener Klipper;VR 121V;Clamp volt 215V at Ipp 7.0A;tolerence 10%
34	2KZ150A	6		A3q§	Zener Klipper;VR 121V;Clamp volt 215V at Ipp 7.0A;tolerence 5%
35	2KZ150B	6		A3q☑	Zener Klipper;VR 121V;Clamp volt 215V at Ipp 7.0A;tolerence 20% N
36	2KZ160	6		A3q§	Zener Klipper;VR 130V;Clamp volt 230V at Ipp 6.5A;tolerence 10%
37	2KZ160A	6		A3q§	Zener Klipper;VR 130V;Clamp volt 230V at Ipp 6.5A;tolerence 5%
38	2KZ160B	6		A3q☑	Zener Klipper;VR 130V;Clamp volt 230V at Ipp 6.5A;tolerence 20%
39	2KZ170	6		A3q§	Zener Klipper;VR 138V;Clamp volt 244V at Ipp 6.2A;tolerence 10%
40	2KZ170A	6		A3q§	Zener Klipper;VR 138V;Clamp volt 244V at Ipp 6.2A;tolerence 5%
41	2KZ170B	6		A3q☑	Zener Klipper;VR 138V;Clamp volt 244V at Ipp 6.2A;tolerence 20%
42	2KZ180	6		A3q§	Zener Klipper;VR 146V;Clamp volt 258V at Ipp 5.8A;tolerence 10%
43	2KZ180A	6		A3q§	Zener Klipper;VR 146V;Clamp volt 258V at Ipp 5.8A;tolerence 5%
44♦	15KS17	6		M122i	VR17;VBR 18.9-23.1V at It 50mA;VC:32.3;Ir 5.0mA:Ip464A
45	15KS17A	6		M122i	VR17V;VBR18.9-20.9VatIt50mA;Vc29.3V;IR5.0mA;Ip512A
46	15KS18	6		M122i	VR18V;VBR20-24.4VatIt50mA;Vc34.2V;IR5.0mA;Ip439A
47	15KS18A	6		M122i	VR18V;VBR20-22.1VatIt50mA;Vc30.9V;IR5.0mA;Ip485A
48	15KS20	6		M122i	VR20V;VBR22.2-27.1VatIt20mA;Vc37.9V;IR1.5mA;Ip396A
49	15KS20A	6		M122i	VR20V;VBR22.2-24.5VatIt20mA;Vc34.3V;IR1.5mA;Ip437A
50	15KS22	6		M122i	VR22V;VBR24.4-29.8VatIt10mA;Vc41.1V;IR500uA;Ip365A
51	15KS22A	6		M122i	VR22V;VBR24.4-26.9VatIt10mA;Vc37.1V;IR500uA;Ip404A
52	15KS24	6		M122i	VR24V;VBR26.7-32.6VatIt5.0mA;Vc45V;IR150uA;Ip333A
53	15KS24A	6		M122i	VR24V;VBR26.7-29.5VatIt5.0mA;Vc40.7V;IR150uA;Ip369A
54	15KS26	6		M122i	VR26V;VBR28.9-35.3VatIt5.0mA;Vc48.7V;IR50uA;Ip308A
55	15KS26A	6		M122i	VR26V;VBR28.9-31.9VatIt5.0mA;Vc44V;IR50uA;Ip341A
56	15KS28A	6		M122i	VR28.0;VBR31.1-34.4VatIt5mA;Vc47.5V;IR25uA;Ip316A
57	15KS30	6		M122i	VR30.0;VBR33.3-40.7VatIt5mA;Vc56.2V;IR15uA;Ip267A
58	15KS30A	6		M122i	VR30.0;VBR33.3-36.8VatIt5mA;Vc50.7V;IR15uA;Ip296A
59	15KS33	6		M122i	VR33.0;VBR36.7-44.9VatIt5mA;Vc60.6V;IR10uA;Ip248A
60	15KS33A	6		M122i	VR33.0;VBR36.7-40.6VatIt5mA;Vc54.8V;IR10uA;Ip274A
61	15KS36	6		M122i	VR36.0;VBR40-48.9VatIt5mA;Vc66V;IR10uA;Ip227A
62	15KS36A	6		M122i	VR36.0;VBR40-44.2VatIt5mA;Vc59.7V;IR10uA;Ip251A
63	15KS40	6		M122i	VR40.0;VBR44.4-54.3VatIt5mA;Vc72.8V;IR10uA;Ip206A
64	15KS40A	6		M122i	VR40.0;VBR44.4-49.1VatIt5mA;Vc65.8V;IR10uA;Ip228A
65	15KS43	6		M122i	VR43.0;VBR47.8-52.8VatIt5mA;Vc77.1V;IR10uA;Ip195A
66	15KS43A	6		M122i	VR43.0;VBR50-61.1VatIt5mA;Vc69.7V;IR10uA;Ip215A
67	15KS45	6		M122i	VR45.0;VBR50-55.3VatIt5mA;Vc80.7V;IR10uA;Ip186A
68	15KS45A	6		M122i	VR45.0;VBR50-55.3VatIt5.0mA;Vc73.0V;IR10uA;Ip205.0A
69	15KS48	6		M122i	VR48.0;VBR53.3-65.1VatIt5.0mA;Vc85.9V;IR10uA;Ip175.0A
70	15KS48A	6		M122i	VR48.0;VBR53.3-58.9VatIt5.0mA;Vc77.7V;IR10uA;Ip193.0A
71	15KS51	6		M122i	VR51.0;VBR56.7-69.3VatIt5.0mA;Vc91.5V;IR10uA;Ip164.0A
72	15KS51A	6		M122i	VR51.0;VBR56.7-62.7VatIt5.0mA;Vc92.8V;IR10uA;Ip181.0A
73	15KS54	6		M122i	VR54.0;VBR60-73.3VatIt5.0mA;Vc96.8V;IR10uA;Ip155.0A
74	15KS54A	6		M122i	VR54.0;VBR60-66.3VatIt5.0mA;Vc87.5V;IR10uA;Ip171.0A
75	15KS58	6		M122i	VR58.0;VBR64.4-78.7VatIt5.0mA;Vc104.0V;IR10uA;Ip144.0A
76	15KS58A	6		M122i	VR58.0;VBR64.4-71.2VatIt5.0mA;Vc94.0V;IR10uA;Ip160.0A
77	15KS60	6		M122i	VR60.0;VBR66.7-81.5VatIt5.0mA;Vc107.0V;IR10uA;Ip140.0A
78	15KS60A	6		M122i	VR60.0;VBR66.7-73.7VatIt5.0mA;Vc97.0V;IR10uA;Ip154.0A
79	15KS64	6		M122i	VR64.0;VBR71.1-86.9VatIt5.0mA;Vc115.0V;IR10uA;Ip130.0A
80	15KS64A	6		M122i	VR64.0;VBR71.1-78.60VatIt5.0mA;Vc104.0V;IR10uA;Ip144.0A
81	15KS70	6		M122i	VR70.0;VBR77.8-95.10VatIt5.0mA;Vc126.0V;IR10uA;Ip119.0A
82	15KS70A	6		M122i	VR70.0;VBR77.8-86.0VatIt5.0mA;Vc114.0V;IR10uA;Ip132.0A
83	15KS75	6		M122i	VR75.0;VBR83.3-102.0VatIt5.0mA;Vc135.0V;IR10uA;Ip111.0A
84	15KS75A	6		M122i	VR75.0;VBR83.3-92.10VatIt5.0mA;Vc122.0V;IR10uA;Ip123.0A
85	15KS78	6		M122i	VR78.0;VBR86.7-106.0VatIt5.0mA;Vc140.0V;IR10uA;Ip107A
86	15KS78A	6		M122i	VR78.0;VBR86.7-95.80VatIt5.0mA;Vc126.0V;IR10uA;Ip119.0A
87	15KS85	6		M122i	VR85.0;VBR94.4-115.0VatIt5.0mA;Vc152.0V;IR10uA;Ip99.0A
88♦	15KS85A	6		M122i	VR85.0;VBR94.4-104.0Vat It 5.0mA;Vc 137.0V;IR10UA;Ip109.0A
89	15KS90	6		M122i	VR90.0;VBR100-112.0VatIt5.0mA;Vc160.0V;IR10uA;Ip94.0A
90	15KS90A	6		M122i	VR90.0;VBR100-111.0VatIt5.0mA;Vc146.0V;IR10uA;Ip103.0A
91	15KS100	6		M122i	VR100.0;VBR111-136.0VatIt5.0mA;Vc179.0V;IR10uA;Ip84.0A
92	15KS100A	6		M122i	VR100.0;VBR111-123.0VatIt5.0mA;Vc162.0V;IR10uA;Ip93.0A
93	15KS110	6		M122i	VR110.0;VBR122-149.0VatIt5.0mA;Vc196.0V;IR10uA;Ip77.0A
94	15KS110A	6		M122i	VR110.0;VBR122-135.0VatIt5.0mA;Vc178.0V;IR10uA;Ip84.0A
95	15KS120	6		M122i	VR120.0;VBR133-163.0VatIt5.0mA;Vc214.0V;IR10uA;Ip70.0A
96	15KS120A	6		M122i	VR120.0;VBR133-147.0VatIt5.0mA;Vc193.0V;IR10uA;Ip78.0A
97	15KS130	6		M122i	VR130.0;VBR144-176.0VatIt5.0mA;Vc231.0V;IR10uA;Ip65.0A
98	15KS130A	6		M122i	VR130.0;VBR144-159.0VatIt5.0mA;Vc209.0V;IR10uA;Ip72.0A
99	15KS150	6		M122i	VR150.0;VBR167-204.0VatIt5.0mA;Vc268V;IR10uA;Ip56.0A
100	15KS150A	6		M122i	VR150.0;VBR167-185.0VatIt5.0mA;Vc243V;IR10uA;Ip62.0A
101	15KS160	6		M122i	VR160.0;VBR178-218.0VatIt5.0mA;Vc287V;IR10uA;Ip52.0A
102	15KS160A	6		M122i	VR160.0;VBR178-197.0VatIt5.0mA;Vc259V;IR10uA;Ip58.0A
103	15KS170	6		M122i	VR170.0;VBR189-231.0VatIt5.0mA;Vc304V;IR10uA;Ip49.0A
104	15KS170A	6		M122i	VR170.0;VBR189-209.0VatIt5.0mA;Vc275V;IR10uA;Ip55.0A
105	15KS180	6		M122i	VR180.0;VBR200-244.0VatIt5.0mA;Vc321V;IR10uA;Ip47.0A
106	15KS180A	6		M122i	VR180.0;VBR200-221.0VatIt5.0mA;Vc291V;IR10uA;Ip52.0A
107	15KS200	6		M122i	VR200.0;VBR222-271.0VatIt5.0mA;Vc356V;IR10uA;Ip42.0A
108	15KS200A	6		M122i	VR200.0;VBR222-245.0VatIt5.0mA;Vc322V;IR10uA;Ip47.0A
109	15KS220	6		M122i	VR220.0;VBR245-299.0VatIt5.0mA;Vc393V;IR10uA;Ip38.0A
110	15KS220A	6		M122i	VR220.0;VBR245-271.0VatIt5.0mA;Vc356V;IR10uA;Ip42.0A

SYMBOLS AND CODES EXPLAINED IN INTERPRETER

7. TRANSIENT SUPPRESSOR DIODES - Bipolar & Unipolar Types (Cont'd)

IN ORDER OF (1) TYPE (2) MAT AND (3) TYPE NO.

LINE No.	3 TYPE NUMBER	1 TYPE	2 MAT.	DWG. NO.	DESCRIPTION
1	15KS240	6		M122i	VR240;VBR267-326.0VatIt5.0mA;Vc428V;IR10uA;Ip35.0A
2	15KS240A	6		M122i	VR240;VBR267-295.0VatIt5.0mA;Vc388V;IR10uA;Ip39.0A
3	15KS260	6		M122i	VR260;VBR289-353.0VatIt5.0mA;Vc464V;IR10uA;Ip32.0A
4	15KS260A	6		M122i	VR260;VBR289-319.0VatIt5.0mA;Vc419V;IR10uA;Ip36.0A
5	15KS280	6		M122i	VR280;VBR311-380.0VatIt5.0mA;Vc500V;IR10uA;Ip30.0A
6	15KS280A	6		M122i	VR280;VBR311-344VatIt5mA;Vc452V;IR10uA;Ip33A
7	BZW04-5V8	6		A398m	IRM 1.0mA at 5.8 VRM;7.14 V(BR) max at IR 10mA;10.5 V(CL) at Ipp 38A
8	BZW04-5V8B	6		A398m	IRM 1.0mA at 5.8 VRM;7.14 V(BR) max at IR 10mA;10.5 V(CL) at Ipp 38A;Bidirect
9	BZW04-6V0	6		DO15	VBR 7.5V at 10mA;Vclamp 11.7V max at 34A;UL recognized
10	BZW04-6V4	6		A398m	IRM 500uA at 6.4 VRM;7.88 V(BR) max at IR 10mA;11.3 V(CL) at Ipp 35.4A
11	BZW04-6V4B	6		A398m	IRM 500uA at 6.4 VRM;7.88 V(BR) max at IR 10mA;11.3 V(CL) at Ipp 35.4A;Bidirect
12♦	BZW04-6V6	6		DO15	VBR 8.2V at 10ma; Vclamp 12.5V max at 32A; UL recognized
13	BZW04-7V0	6		A398m	IRM 200uA at 7.02 VRM;8.61 V(BR) max at IR 10mA;12.1 V(CL) at Ipp 33A
14	BZW04-7V0B	6		A398m	IRM 200uA at 7.02 VRM;8.61 V(BR) max at IR 10mA;12.1 V(CL) at Ipp 33A;Bidirect
15	BZW04-7V4	6		DO15	VBR 9.1V at 1.0mA;Vclamp 13.8V max at 29A;UL recognized
16	BZW04-7V8	6		A398m	IRM 50uA at 7.78 VRM;9.55 V(BR) max at IR 10mA;13.4 V(CL) at Ipp 30A
17	BZW04-7V8B	6		A398m	IRM 50uA at 7.78 VRM;9.55 V(BR) max at IR 1.0mA;13.4 V(CL) at Ipp 30A;Bidirect
18	BZW04-8V1	6		DO15	VBR 10V at 1.0mA;Vclamp 15.0V max at 27A;UL recognized
19	BZW04-8V6	6		A398m	IRM 10uA at 8.55 VRM;10.5 V(BR) max at IR 1.0mA;14.5 V(CL) at Ipp 27.6A
20	BZW04-8V6B	6		A398m	IRM 10uA at 8.55 VRM;10.5 V(BR) max at IR 1.0mA;14.5 V(CL) at Ipp 27.6A;Bidirect
21	BZW04-8V9	6		DO15	VBR 11V at 1.0mA;Vclamp 16.2V max at 24.7A;UL recognized
22	BZW04-9V4	6		A398m	IRM 5.0uA at 9.4 VRM;11.6 V(BR) max at IR 1.0mA;15.6 V(CL) at Ipp 25.7A
23	BZW04-9V4B	6		A398m	IRM 5.0uA at 9.4 VRM;11.6 V(BR) max at IR 1.0mA;15.6 V(CL) at Ipp 25.7A;Bidirect
24	BZW04-9V7	6		DO15	VBR 12V at 1.0mA;Vclamp 17.3V max at 23.1A;UL recognized
25	BZW04-9V9	6		A398m	IRM 5.0uA at 10.2 VRM;12.6 V(BR) max at IR 1.0mA;16.7 V(CL) at Ipp 24A
26	BZW04-9V9B	6		A398m	IRM 5.0uA at 10.2 VRM;12.6 V(BR) at IR 1.0mA;16.7 V(CL) at Ipp 24A;Bidirectional
27	BZW04-10	6		DO15	VBR 13V at 1.0mA;Vclamp 19.0V max at 21A;UL recognized
28	BZW04-11	6		A398m	IRM 5.0uA at 11.1 VRM;12.7 V(BR) at IR 1.0mA;18.2 V(CL) at Ipp 22A
29	BZW04-11B	6		A398m	IRM 5.0uA at 11.1 VRM;12.7 V(BR) at IR 1.0mA;18.2 V(CL) at Ipp 22A;Bidirect
30	BZW04-12	6		DO15	VBR 15V at 1.0mA;Vclamp 22.0V max at 18.2A;UL recognized
31	BZW04-12V5	6		A398m	IRM 5.0uA at 12.8 VRM;15.8 V(BR) at IR 1.0mA;21.2 V(CL) at Ipp 19A
32	BZW04-12V5B	6		A398m	IRM 5.0uA at 12.8 VRM;15.8 V(BR) at IR 1.0mA;21.2 V(CL) at Ipp 19A;Bidirect
33	BZW04-13	6		DO15	VBR 16V at 1.0mA;Vclamp 23.5V max at 17A;UL recognized
34	BZW04-13V5	6		A398m	IRM 5.0uA at 13.6 VRM;16.8 V(BR) at IR 1.0mA;22.5 V(CL) at Ipp 17.8A
35	BZW04-13V5B	6		A398m	IRM 5.0uA at 13.6 VRM;16.8 V(BR) max at IR 1.0mA;22.5 V(CL) at Ipp 17.8A;Bidirectional
36	BZW04-14	6		DO15	VBR 18V at 1.0mA;Vclamp 26.5V max at 15.1A;UL recognized
37	BZW04-15	6		A398m	IRM 5.0uA at 15.3 VRM;18.9 V(BR) max at IR 1.0mA;25.2 V(CL) at Ipp 16A
38	BZW04-15B	6		A398m	IRM 5.0uA at 15.3 VRM;18.9 V(BR) max at IR 1.0mA;25.2 V(CL) at Ipp 16A;Bidirectional
39	BZW04-16	6		DO15	VBR 20V at 1.0mA;Vclamp 29.1V max at 13.7A;UL recognized
40	BZW04-17	6		A398m	IRM 5.0uA at 17.1 VRM;21V(BR) max at IR 1.0mA;27.7V(CL) at Ipp 14.5A
41	BZW04-17B	6		A398m	IRM 5.0uA at 17.1 VRM;21V(BR) max at IR 1.0mA;27.7V(CL) at Ipp 14.5A;Bidirectional
42	BZW04-18	6		Albg	Voltage Suppressor;V(BR) 24.2V max;IRM 5uA at VRM 17.8V
43	BZW04-18V15	6		A398m	IRM 5.0uA at 18.8 VRM;23.1 V(BR) max at IR 1.0mA;30.6 V(CL) at Ipp 13A
44	BZW04-18V5B	6		A398m	IRM 5.0uA at 18.8VRM;23.1V(BR) max at IR 1.0mA;30.6V(CL) at Ipp 13A;Bidirectional
45	BZW04-19	6		Albg	Voltage Suppressor;V(BR) 26.4V max;IRM 5uA at VRM 19.4V
46	BZW04-20	6		A398m	IRM 5.0uA at 20.5VRM;25.2V(BR) max at IR 1.0mA;33.2V(CL) at Ipp 12A
47	BZW04-20B	6		A398m	IRM 5.0uA at 20.5VRM;25.2V(BR) max at IR 1.0mA;33.2V(CL) at Ipp 12A;Bidirectional
48	BZW04-22	6		Albg	Voltage Suppressor;V(BR) 29.7V max;IRM 5uA at VRM 21.8V
49	BZW04-23	6		A398m	IRM 5.0uA at 23.1VRM;28.4V(BR) max at IR 1.0mA;37.5V(CL) at Ipp 10.7A
50	BZW04-23B	6		A398m	IRM 5.0uA at 23.1VRM;28.4V(BR) max at IR 1.0mA;37.5V(CL) at Ipp 10.7A;Bidirectional
51	BZW04-26	6		A398m	IRM 5.0uA at 25.6VRM;31.5V(BR) max at IR 1.0mA;41.5V(CL) at Ipp 9.6A
52	BZW04-26B	6		A398m	IRM 5.0uA at 25.6VRM;31.5V(BR) max at IR 1.0mA;41.5V(CL) at Ipp 9.6A;Bidirectional
53	BZW04-27	6		Albg	Voltage Suppressor;V(BR) 36.3V max;IRM 5uA at VRM 26.8V
54	BZW04-28	6		A398m	IRM 5.0uA at 28.2VRM;34.7V(BR) max at IR 1.0mA;45.7V(CL) at Ipp 8.8A
55	BZW04-28B	6		A398m	IRM 5.0uA at 28.2VRM;34.7V(BR) max at IR 1.0mA;45.7V(CL) at Ipp 8.8A;Bidirectional
56	BZW04-29	6		Albg	Voltage Suppressor;V(BR) 39.6V max;IRM 5uA at VRM 29.1V
57	BZW04-31	6		A398m	IRM 5.0uA at 30.8VRM;37.8V(BR) max at IR 1.0mA;49.9V(CL) at Ipp 8.0A
58	BZW04-31B	6		A398m	IRM 5.0uA at 30.8VRM;37.8V(BR) max at IR 1.0mA;49.9V(CL) at Ipp 8.0A;Bidirectional
59	BZW04-32	6		Albg	Voltage Suppressor;V(BR) 42.9V max;IRM 5uA at VRM 31.6V
60	BZW04-33	6		A398m	IRM 5.0uA at 33.3VRM;41.0V(BR) max at IR 1.0mA;53.9V(CL) at Ipp 7.4A
61	BZW04-33B	6		A398m	IRM 5.0uA at 33.3VRM;41.0V(BR) max at IR 1.0mA;53.9V(CL) at Ipp 7.4A;Bidirectional
62	BZW04-35	6		Albg	Voltage Suppressor;V(BR) 47.3V max;IRM 5uA at VRM 34.8V
63	BZW04-37	6		A398m	IRM 5.0uA at 36.8VRM;45.2V(BR) max at IR 1.0mA;59.3V(CL) at Ipp 6.7A
64	BZW04-37B	6		A398m	IRM 5.0uA at 36.8VRM;45.2V(BR) max at IR 1.0mA;59.3V(CL) at Ipp 6.7A;Bidirectional
65	BZW04-38	6		Albg	Voltage Suppressor;V(BR) 51.7V max;IRM 5uA at VRM 38.1V
66	BZW04-40	6		A398m	IRM 5.0uA at 40.2VRM;49.4V(BR) max at IR 1.0mA;64.8V(CL) at Ipp 6.2A
67	BZW04-40B	6		A398m	IRM 5.0uA at 40.2VRM;49.4V(BR) max at IR 1.0mA;64.8V(CL) at Ipp 6.2A;Bidirectional
68	BZW04-41	6		Albg	Voltage Suppressor;V(BR) 56.1V max;IRM 5uA at VRM 41.3V
69	BZW04-44	6		A398m	IRM 5.0uA at 43.6VRM;53.6V(BR) max at IR 1.0mA;70.1V(CL) at Ipp 5.7A
70	BZW04-44B	6		A398m	IRM 5.0uA at 43.6VRM;53.6V(BR) max at IR 1.0mA;70.1V(CL) at Ipp 5.7A;Bidirect
71	BZW04-45	6		Albg	Voltage Suppressor;V(BR) 61.6V max;IRM 5uA at VRM 45.4V
72	BZW04-48	6		A398m	IRM 5.0uA at 47.8VRM;58.8V(BR) max at IR 1.0mA;77V(CL) at Ipp 5.2A
73	BZW04-48B	6		A398m	IRM 5.0uA at 47.8VRM;58.8V(BR) max at IR 1.0mA;77V(CL) at Ipp 5.2A;Bidirectional
74	BZW04-50	6		Albg	Voltage Suppressor;V(BR) 68.2V max;IRM 5uA at VRM 50.2V
75	BZW04-53	6		A398m	IRM 5.0uA at 53VRM;65.1V(BR) max at IR 1.0mA;85V(CL) at Ipp 4.7A
76	BZW04-53B	6		A398m	IRM 5.0uA at 53VRM;65.1V(BR) max at IR 1.0mA;85V(CL) at Ipp 4.7A;Bidirectional
77	BZW04-55	6		A1bg	Voltage Suppressor;V(BR) 74.8 Vmax;IRM 5uA at VRM 55.1 V
78	BZW04-58	6		A398m	IRM 5.0uA at 58.1VRM;71.4V(BR) max at IR 1.0mA;92V(CL) at Ipp 4.3A
79	BZW04-58B	6		A398m	IRM 5.0uA at 58.1VRM;71.4V(BR) max at 1.0mA;92V(CL) at Ipp 4.3A;Bidir
80	BZW04-61	6		A1bg	Voltage Suppressor;V(BR) 82.5 Vmax;IRM 5uA at VRM 60.7 V
81	BZW04-64	6		A398m	IRM 5.0uA at 64.1VRM;78.8V(BR) max at 1.0mA;103V(CL) at Ipp 3.9A
82	BZW04-64B	6		A398m	IRM 5.0uA at 64.1VRM;78.8V(BR) max at 1.0mA;103V(CL) at Ipp 3.9A;Bidirectional
83	BZW04-66	6		A1bg	Voltage Suppressor;V(BR) 90.2 Vmax;IRM 5uA at VRM 66.4 V
84	BZW04-70	6		A398m	IRM 5.0uA at 70.1VRM;86.1V(BR) max at 1.0mA;113V(CL at Ipp 3.5A
85	BZW04-70B	6		A398m	IRM 5.0uA at 70.1VRM;86.1V(BR) max at 1.0mA;113V(CL at Ipp 3.5A;Bidirectional
86	BZW04-74	6		A1bg	Voltage Suppressor;V(BR) 100 Vmax;Irm 5uA at VRM 73.7 V1
87	BZW04-78	6		A398m	IRM 5.0uA at 77.8VRM;95.5V(BR) max at 1.0mA;125V(CL) at Ipp 3.2A
88	BZW04-78B	6		A398m	IRM 5.0uA at 77.8VRM;95.5V(BR) max at 1.0mA;125V(CL) at Ipp 3.2A;Bidir
89	BZW04-81	6		DO15	VBR 100V at 1.0mA;Vclamp 144V max at 2.8A;UL recognized
90	BZW04-85	6		A398m	IRM 5.0uA at 85.5VRM;105V(BR) max at 1.0mA;137V(CL) at Ipp 2.9A
91	BZW04-85B	6		A398m	IRM 5.0uA at 85.5VRM;105V(BR) max at 1.0mA;137V(CL) at Ipp 2.9A;Bidirectional
92	BZW04-89	6		A1bg	Voltage Suppressor;V(BR) 121 Vmax;IRM 5uA at VRM 89.2 V
93	BZW04-94	6		A398m	IRM 5.0uA at 94VRM;116V(BR) max at IR 1.0mA;152V(CL) at Ipp 2.6A
94	BZW04-94B	6		A398m	IRM 5.0uA at 94VRM;116V(BR) max at IR 1.0mA;152V(CL) at Ipp 2.6A;Bidirectional
95	BZW04-97	6		A1bg	Voltage Suppressor;V(BR) 132 Vmax;IRM 5uA at VRM 97.2 V
96	BZW04-102	6		A398m	IRM 5.0uA at 102VRM;126V(BR) max at IR 1.0mA;165V(CL) at Ipp 2.4A
97	BZW04-102B	6		A398m	IRM 5.0uA at 102VRM;126V(BR) max at 1.0mA;165V(CL) at Ipp 2.4A;Bidirect
98	BZW04-105	6		A1bg	Voltage Suppressor;V(BR) 143 Vmax;IRM 5uA at VRM 105 V
99	BZW04-111	6		A398m	IRM 5.0uA at 111VRM;137V(BR) max at 1.0mA;179V(CL) at Ipp 2.2A
100	BZW04-111B	6		A398m	IRM 5.0uA at 111VRM;137V(BR) max at 1.0mA;179V(CL) at Ipp 2.2A;Bidirect
101	BZW04-121	6		A1bg	Voltage Suppressor;V(BR) 165 Vmax;IRM 5uA at VRM 121 V
102	BZW04-128	6		A398m	IRM 5.0uA at 128VRM;158V(BR) max at IR 1.0mA;207V(CL) at Ipp 2.0A
103	BZW04-128B	6		A398m	IRM 5.0uA at 128VRM;158V(BR) max at IR 1.0mA;207V(CL) at Ipp 2.0A;Bidirect
104	BZW04-130	6		A1bg	Voltage Suppressor;V(BR) 176 Vmax;IRM 5uA at VRM 130 V
105	BZW04-136	6		A398m	IRM 5.0uA at 136VRM;168V(BR) max at IR 1.0mA;219V(CL) at Ipp 1.8A
106	BZW04-136B	6		A398m	IRM 5.0uA at 136VRM;168V(BR) max at IR 1.0mA;219V(CL) at Ipp 1.8A;Bidirect
107	BZW04-138	6		A1bg	Voltage Suppressor;V(BR) 187 Vmax;IRM 5uA at VRM 138 V
108	BZW04-144	6		A398m	IRM 5.0uA at 145VRM;179V(BR) max at IR 1.0mA;234V(CL) at Ipp 1.7A
109	BZW04-145B	6		A398m	IRM 5.0uA at 145VRM;179V(BR) max at IR 1.0mA;234V(CL) at Ipp 1.7A;Bidirect
110	BZW04-146	6		A1bg	Voltage Suppressor;V(BR) 198 Vmax;IRM 5uA at VRM 146 V

7. TRANSIENT SUPPRESSOR DIODES - Bipolar & Unipolar Types (Cont'd)

IN ORDER OF (1) TYPE (2) MAT AND (3) TYPE NO.

LINE No.	3 TYPE NUMBER	1 TYPE	2 MAT.	DWG. NO.	DESCRIPTION
1	BZW04-154	6		A398m	IRM 5.0uA at 154VRM;189V(BR) max at IR 1.0mA;246V(CL) at Ipp 1.6A
2	BZW04-154B	6		A398m	IRM 5.0uA at 154VRM;189V(BR) max at IR 1.0mA;246V(CL) at Ipp 1.6A;Bidirect
3	BZW04-162	6		A1bg	Voltage Suppressor;V(BR) 220V max;IRM 5uA at VRM 162V
4	BZW04-171	6		A398m	IRM 5.0uA at 171VRM;210V(BR) max at IR 1.0mA;274V(CL) at Ipp 1.5A
5	BZW04-171B	6		A398m	IRM 5.0uA at 171VRM;210V(BR) max at IR 1.0mA;274V(CL) at Ipp 1.5A;Bidirect
6	BZW04-188	6		A398m	IRM 5.0uA at 188VRM;231V(BR) max at IR 1.0mA;301V(CL) at Ipp 1.4A
7	BZW04-188B	6		A398m	IRM 5.0uA at 188VRM;231V(BR) max at IR 1.0mA;301V(CL) at Ipp 1.4A;Bidirect
8	BZW04-213	6		A398m	IRM 5.0uA at 213VRM;263V(BR) max at IR 1.0mA;344V(CL) at Ipp 1.5A
9	BZW04-213B	6		A398m	IRM 5.0uA at 213VRM;263V(BR) max at IR 1.0mA;344V(CL) at Ipp 1.5A;Bidirect
10	BZW04-239	6		A398m	IRM 5.0uA at 239VRM;294V(BR) max at IR 1.0mA;384V(CL) at Ipp 1.5A
11	BZW04-239B	6		A398m	IRM 5.0uA at 239VRM;294V(BR) max at 1.0mA;384V(CL) at Ipp 1.5A;Bidirectional
12	BZW04-256	6		A398m	IRM 5.0uA at 256VRM;315V(BR) max at 1.0mA;414V(CL) at Ipp 1.2A
13	BZW04-256B	6		A398m	IRM 5.0uA at 256VRM;315V(BR) max at 1.0mA;414V(CL) at Ipp 1.2A;Bidirectional
14	BZW04-273	6		A398m	IRM 5.0uA at 273VRM;336V(BR) max at IR 1.0mA;438V(CL) at Ipp 1.2A
15	BZW04-273B	6		A398m	IRM 5.0uA at 273VRM;336V(BR) max at IR 1.0mA;438V(CL) at Ipp 1.2A;Bidirectional
16	BZW04-299	6		A398m	IRM 5.0uA at 299VRM;368V(BR) max at IR 1.0mA;482V(CL) at Ipp 900mA
17	BZW04-299B	6		A398m	IRM 5.0uA at 299VRM;368V(BR) max at IR 1.0mA;482V(CL) at IPP 900mA;Bidir
18	BZW04-342	6		A398m	IRM 5.0uA at 342VRM;420V(BR) max at IR 1.0mA;548V(CL) at Ipp 900mA
19	BZW04-342B	6		A398m	IRM 5.0uA at 342VRM;420V(BR) max at IR 1.0mA;548V(CL) at Ipp 900mA;Bidirect
20	BZW04-376	6		A398m	IRM 5.0uA at 376VRM;462V(BR) max at IR 1.0mA;603V(CL) at Ipp 800mA
21	BZW04-376B	6		A398m	IRM 5.0uA at 376VRM;462V(BR) max at IR 1.0mA;603V(CL) at Ipp 800mA;Bidirect
22	BZW04P5V8	6		A398m	IRM 1.0mA at 5.8 VRM;7.48 V(BR) max at IR 10mA;10.5 V(CL) at Ipp 38A
23	BZW04P5V8B	6		A398m	IRM 1.0mA at 5.8 VRM;7.48 V(BR) max at IR 10mA;10.5 V(CL) at Ipp 38A;Bidirect
24	BZW04P6V4	6		A398m	IRM 500uA at 6.4 VRM;8.25 V(BR) max at IR 10mA;11.3 V(CL) at Ipp 35.4A
25	BZW04P6V4B	6		A398m	IRM 500uA at 6.4 VRM;8.25 V(BR) max at IR 10mA;11.3 V(CL) at Ipp 35.4A;Bidirect
26	BZW04P7V0	6		A398m	IRM 200uA at 7.02 VRM;9.02 V(BR) max at IR 10mA;12.1 V(CL) at Ipp 33A
27	BZW04P7V0B	6		A398m	IRM 200uA at 7.02 VRM;9.02 V(BR) max at IR 10mA;12.1 V(CL) at Ipp 33A;Bidirect
28	BZW04P7V8	6		A398m	IRM 50uA at 7.78 VRM;10.0 V(BR) max at IR 10mA;13.4 V(CL) at Ipp 30A
29	BZW04P7V8B	6		A398m	IRM 50uA at 7.78 VRM;10.0 V(BR) max at IR 10mA;13.4 V(CL) at Ipp 30A;Bidirect
30	BZW04P8V5	6		A398m	IRM 10uA at 8.55 VRM;11.0 V(BR) max at IR 1.0mA;14.5 V(CL) at Ipp 27.6A
31	BZW04P8V5B	6		A398m	IRM 10uA at 8.55 VRM;11.0 V(BR) max at IR 1.0mA;14.5 V(CL) at Ipp 27.6A;Bidirect
32	BZW04P9V4	6		A398m	IRM 5.0uA at 9.4 VRM;12.1 V(BR) max at IR 1.0mA;15.6 V(CL) at Ipp 25.7A
33	BZW04P9V4B	6		A398m	IRM 5.0uA at 9.4 VRM;12.1 V(BR) max at IR 1.0mA;15.6 V(CL) at Ipp 25.7A;Bidirect
34	BZW04P10	6		A398m	IRM 5.0uA at 10.2 VRM;13.2 V(BR) max at IR 1.0mA;16.7 V(CL) at Ipp 24A
35	BZW04P10B	6		A398m	IRM 5.0uA at 10.2 VRM;13.2 V(BR) max at IR 1.0mA;16.7 V(CL) at Ipp 24A;Bidirect
36	BZW04P11	6		A398m	IRM 5.0uA at 11.1 VRM;14.3 V(BR) at IR 1.0mA;18.2 V(CL) at Ipp 22A
37	BZW04P11B	6		A398m	IRM 5.0uA at 11.1 VRM;14.3 V(BR) at IR 1.0mA;18.2 V(CL) at Ipp 22A;Bidirect
38	BZW04P13	6		A398m	IRM 5.0uA at 12.8 VRM;16.5 V(BR) at IR 1.0mA;21.2 V(CL) at Ipp 19A
39	BZW04P13B	6		A398m	IRM 5.0uA at 12.8 VRM;16.5 V(BR) at IR 1.0mA;21.2 V(CL) at Ipp 19A;Bidirect
40	BZW04P14	6		A398m	IRM 5.0uA at 13.6 VRM;17.6 V(BR) at IR 1.0mA;22.5 V(CL) at Ipp 17.8A
41	BZW04P14B	6		A398m	IRM 5.0uA at 13.6 VRM;17.6 V(BR) at IR 1.0mA;22.5 V(CL) at Ipp 17.8A;Bidirect
42	BZW04P15	6		A398m	IRM 5.0uA at 15.3 VRM;19.8 V(BR) max at IR 1.0mA;25.2 V(CL) at Ipp 16A
43	BZW04P15B	6		A398m	IRM 5.0uA at 15.3 VRM;19.8 V(BR) max at IR 1.0mA;25.2 V(CL) at Ipp 16A;Bidirectional
44	BZW04P17	6		A398m	IRM 5.0uA at 17.1 VRM;22V(BR) max at IR 1.0mA;27.7V(CL) at Ipp 14.5A
45	BZW04P17B	6		A398m	IRM 5.0uA at 17.1 VRM;22V(BR) max at IR 1.0mA;27.7V(CL) at Ipp 14.5A;Bidirectional
46	BZW04P19	6		A398m	IRM 5.0uA at 18.8 VRM;24.2 V(BR) max at IR 1.0mA;30.6 V(CL) at Ipp 13A
47	BZW04P19B	6		A398m	IRM 5.0uA at 18.8 VRM;24.2 V(BR) max at IR 1.0mA;30.6 V(CL) at Ipp 13A;Bidirectional
48	BZW04P20	6		A398m	IRM 5.0uA at 20.5VRM;26.4V(BR) max at IR 1.0mA;33.2V(CL) at Ipp 12A
49	BZW04P20B	6		A398m	IRM 5.0uA at 20.5VRM;26.4V(BR) max at IR 1.0mA;33.2V(CL) at Ipp 12A;Bidirectional
50	BZW04P23	6		A398m	IRM 5.0uA at 23.1VRM;29.7V(BR) max at IR 1.0mA;37.5V(CL) at Ipp 10.7A
51	BZW04P26	6		A398m	IRM 5.0uA at 25.6VRM;33.0V(BR) max at IR 1.0mA;41.5V(CL) at Ipp 9.6A
52	BZW04P26B	6		A398m	IRM 5.0uA at 25.6VRM;33.0V(BR) max at IR 1.0mA;41.5V(CL) at Ipp 9.6A;Bidirectional
53	BZW04P28	6		A398m	IRM 5.0uA at 28.2VRM;36.3V(BR) max at IR 1.0mA;45.7V(CL) at Ipp 8.8A
54	BZW04P28B	6		A398m	IRM 5.0uA at 28.2VRM;36.3V(BR) max at IR 1.0mA;45.7V(CL) at Ipp 8.8A;Bidirectional
55	BZW04P31	6		A398m	IRM 5.0uA at 30.8VRM;39.6V(BR) max at IR 1.0mA;49.9V(CL) at Ipp 8.0A
56	BZW04P31B	6		A398m	IRM 5.0uA at 30.8VRM;39.6V(BR) max at IR 1.0mA;49.9V(CL) at Ipp 8.0A;Bidirectional
57	BZW04P33	6		A398m	IRM 5.0uA at 33.3VRM;42.9V(BR) max at IR 1.0mA;53.9V(CL) at Ipp 7.4A
58	BZW04P37	6		A398m	IRM 5.0uA at 36.8VRM;47.3V(BR) max at IR 1.0mA;59.3V(CL) at Ipp 6.7A
59	BZW04P37B	6		A398m	IRM 5.0uA at 36.8VRM;47.3V(BR) max at IR 1.0mA;59.3V(CL) at Ipp 6.7A;Bidirectional
60	BZW04P40	6		A398m	IRM 5.0uA at 40.2VRM;51.7V(BR) max at IR 1.0mA;64.8V(CL) at Ipp 6.2A
61	BZW04P40B	6		A398m	IRM 5.0uA at 40.2VRM;51.7V(BR) max at IR 1.0mA;64.8V(CL) at Ipp 6.2A;Bidirectional
62	BZW04P44	6		A398m	IRM 5.0uA at 43.6VRM;56.1V(BR) max at IR 1.0mA;70.1V(CL) at Ipp 5.7A
63	BZW04P44B	6		A398m	IRM 5.0uA at 43.6VRM;56.1V(BR) max at IR 1.0mA;70.1V(CL) at Ipp 5.7A;Bidirectional
64	BZW04P48	6		A398m	IRM 5.0uA at 47.8VRM;61.6V(BR) max at IR 1.0mA;77V(CL) at Ipp 5.2A
65	BZW04P48B	6		A398m	IRM 5.0uA at 47.8VRM;61.6V(BR) max at IR 1.0mA;77V(CL) at Ipp 5.2A;Bidirectional
66	BZW04P53	6		A398m	IRM 5.0uA at 53VRM;68.2V(BR) max at IR 1.0mA;85V(CL) at Ipp 4.7A
67	BZW04P53B	6		A398m	IRM 5.0uA at 53VRM;68.2V(BR) max at IR 1.0mA;85V(CL) at Ipp 4.7A;Bidirectional
68	BZW04P58	6		A398m	IRM 5.0uA at 58.1VRM;74.8V(BR) max at IR 1.0mA;92V(CL) at Ipp 4.3A
69	BZW04P58B	6		A398m	IRM 5.0uA at 58.1VRM;74.8V(BR) max at IR 1.0mA;92V(CL) at Ipp 4.3A;Bidirectional
70	BZW04P64	6		A398m	IRM 5.0uA at 64.1VRM;82.5V(BR) max at 1.0mA;103V(CL) at Ipp 3.9A
71	BZW04P64B	6		A398m	IRM 5.0uA at 64.1VRM;82.5V(BR) max at 1.0mA;103V(CL) at Ipp 3.9A;Bidirectional
72	BZW04P70	6		A398m	IRM 5.0uA at 70.1VRM;90.2V(BR) max at 1.0mA;113V(CL) at Ipp 3.5A
73	BZW04P70B	6		A398m	IRM 5.0uA at 70.1VRM;90.2V(BR) max at 1.0mA;113V(CL at Ipp 3.5A;Bidirectional
74	BZW04P78	6		A398m	IRM 5.0uA at 77.8VRM;100V(BR) max at 1.0mA;125V(CL) at Ipp 3.2A
75	BZW04P78B	6		A398m	IRM 5.0uA at 77.8VRM;100V(BR) max at 1.0mA;125V(CL) at Ipp 3.2A;Bidirectional
76	BZW04P85	6		A398m	IRM 5.0uA at 85.5VRM;110V(BR) max at 1.0mA;137V(CL) at Ipp 2.9A
77	BZW04P85B	6		A398m	IRM 5.0uA at 85.5VRM;110V(BR) max at 1.0mA;137V(CL) at Ipp 2.9A;Bidirectional
78	BZW04P94	6		A398m	IRM 5.0uA at 94VRM;121V(BR) max at IR 1.0mA;152V(CL) at Ipp 2.6A
79	BZW04P94B	6		A398m	IRM 5.0uA at 94VRM;121V(BR) max at IR 1.0mA;152V(CL) at Ipp 2.6A;Bidirectional
80	BZW04P102	6		A398m	IRM 5.0uA at 102VRM;132V(BR) max at IR 1.0mA;165V(CL) at Ipp 2.4A
81	BZW04P102B	6		A398m	IRM 5.0uA at 102VRM;132V(BR) max at IR 1.0mA;165V(CL) at Ipp 2.4A;Bidirectional
82	BZW04P111	6		A398m	IRM 5.0uA at 111VRM;143V(BR) max at 1.0mA;179V(CL) at Ipp 2.2A
83	BZW04P111B	6		A398m	IRM 5.0uA at 111VRM;143V(BR) max at 1.0mA;179V(CL) at Ipp 2.2A;Bidirect
84	BZW04P128	6		A398m	IRM 5.0uA at 128VRM;165V(BR) max at IR 1.0mA;207V(CL) at Ipp 2.0A
85	BZW04P128B	6		A398m	IRM 5.0uA at 128VRM;165V(BR) max at IR 1.0mA;207V(CL) at Ipp 2.0A;Bidirect
86	BZW04P136	6		A398m	IRM 5.0uA at 136VRM;176V(BR) max at IR 1.0mA;219V(CL) at Ipp 1.8A
87	BZW04P136B	6		A398m	IRM 5.0uA at 136VRM;176V(BR) max at IR 1.0mA;219V(CL) at Ipp 1.8A;Bidirect
88	BZW04P145	6		A398m	IRM 5.0uA at 145VRM;187V(BR) max at IR 1.0mA;234V(CL) at Ipp 1.7A
89	BZW04P145B	6		A398m	IRM 5.0uA at 145VRM;187V(BR) max at IR 1.0mA;234V(CL) at Ipp 1.7A;Bidirect
90	BZW04P154	6		A398m	IRM 5.0uA at 154VRM;198V(BR) max at IR 1.0mA;246V(CL) at Ipp 1.6A
91	BZW04P154B	6		A398m	IRM 5.0uA at 154VRM;198V(BR) max at IR 1.0mA;246V(CL) at Ipp 1.6A;Bidirect
92	BZW04P171	6		A398m	IRM 5.0uA at 171VRM;220V(BR) max at IR 1.0mA;274V(CL) at Ipp 1.5A
93	BZW04P171B	6		A398m	IRM 5.0uA at 171VRM;220V(BR) max at IR 1.0mA;274V(CL) at Ipp 1.5A;Bidirect
94	BZW04P188	6		A398m	IRM 5.0uA at 188VRM;242V(BR) max at IR 1.0mA;301V(CL) at Ipp 1.4A
95	BZW04P188B	6		A398m	IRM 5.0uA at 188VRM;242V(BR) max at IR 1.0mA;301V(CL) at Ipp 1.4A;Bidirect
96	BZW04P213	6		A398m	IRM 5.0uA at 213VRM;275V(BR) max at IR 1.0mA;344V(CL) at Ipp 1.5A
97	BZW04P213B	6		A398m	IRM 5.0uA at 213VRM;275V(BR) max at IR 1.0mA;344V(CL) at Ipp 1.5A;Bidirect
98	BZW04P239	6		A398m	IRM 5.0uA at 239VRM;308V(BR) max at IR 1.0mA;384V(CL) at Ipp 1.5A
99	BZW04P239B	6		A398m	IRM 5.0uA at 239VRM;308V(BR) max at IR 1.0mA;384V(CL) at Ipp 1.5A;Bidirect
100	BZW04P256	6		A398m	IRM 5.0uA at 256VRM;330V(BR) max at 1.0mA;414V(CL) at Ipp 1.2A
101	BZW04P256B	6		A398m	IRM 5.0uA at 256VRM;330V(BR) max at 1.0mA;414V(CL) at Ipp 1.2A;Bidirectional
102	BZW04P273	6		A398m	IRM 5.0uA at 273VRM;352V(BR) max at IR 1.0mA;438V(CL) at Ipp 1.2A
103	BZW04P273B	6		A398m	IRM 5.0uA at 273VRM;352V(BR) max at IR 1.0mA;438V(CL) at Ipp 1.2A;Bidirectional
104	BZW04P299	6		A398m	IRM 5.0uA at 299VRM;385V(BR) max at IR 1.0mA;482V(CL) at Ipp 900mA
105	BZW04P299B	6		A398m	IRM 5.0uA at 299VRM;385V(BR) max at IR 1.0mA;482V(CL) at Ipp 900mA;Bidirectional
106	BZW04P342	6		A398m	IRM 5.0uA at 342VRM;440V(BR) max at IR 1.0mA;548V(CL) at Ipp 900mA
107	BZW04P342B	6		A398m	IRM 5.0uA at 342VRM;440V(BR) max at IR 1.0mA;548V(CL) at Ipp 900mA;Bidirect
108	BZW04P376	6		A398m	IRM 5.0uA at 376VRM;484V(BR) max at IR 1.0mA;603V(CL) at Ipp 800mA
109	BZW04P376B	6		A398m	IRM 5.0uA at 376VRM;484V(BR) max at IR 1.0mA;603V(CL) at Ipp 800mA;Bidirect
110	BZW06-5V8	6		A398m	IRM 1.0mA at 5.8VRM;7.14V(BR) max at IR 10mA;10.5V(CL) at Ipp 57A

7. TRANSIENT SUPPRESSOR DIODES - Bipolar & Unipolar Types (Cont'd)

IN ORDER OF (1) TYPE (2) MAT AND (3) TYPE NO.

LINE No.	3 TYPE NUMBER	1 TYPE	2 MAT.	DWG. NO.	DESCRIPTION
1	BZW06-5V8B	6		A398m	IRM 1.0mA at 5.8VRM;7.14V(BR) max at 10mA;10.5V(CL) at Ipp 57A;Bidirect
2	BZW06-6V4	6		A398m	IRM 500uA at 6.4VRM;7.88V(BR) max at IR 10mA;11.3V(CL) at Ipp 53A
3	BZW06-6V4B	6		A398m	IRM 500uA at 6.4VRM;7.88V(BR) max at IR 10mA;11.3V(CL) at Ipp 53A;Bidirectional
4	BZW06-7V0	6		A398m	IRM 200uA at 7.02VRM;8.61V(BR) max at IR 10mA;12.1V(CL) at Ipp 50A
5	BZW06-7V0B	6		A398m	IRM 200uA at 7.02VRM;8.61V(BR) max at IR 10mA;12.1V(CL) at Ipp 50A;Bidirectional
6	BZW06-7V8	6		A398m	IRM 50uA at 7.78VRM;9.55V(BR) max at IR 1.0mA;13.4V(CL) at Ipp 45A
7	BZW06-7V8B	6		A398m	IRM 50uA at 7.78VRM;9.55V(BR) max at IR 1.0mA;13.4V(CL) at Ipp 45A;Bidirectional
8	BZW06-8V5	6		A398m	IRM 10uA at 8.55VRM;10.5V(BR) max at IR 1.0mA;14.5V(CL) at Ipp 41A
9	BZW06-8V5B	6		A398m	IRM 10uA at 8.55VRM;10.5V(BR) max at IR 1.0mA;14.5V(CL) at Ipp 41A;Bidirectional
10	BZW06-9V4	6		A398m	IRM 5.0uA at 9.4VRM;11.6V(BR) max at IR 1.0mA;15.6V(CL) at Ipp 38A
11	BZW06-9V4B	6		A398m	IRM 5.0uA at 9.4VRM;11.6V(BR) max at IR 1.0mA;15.6V(CL) at Ipp 38A;Bidirectional
12♦	BZW06-10	6		A398m	IRM 5.0uA at 10.2VRM;12.6V(BR) max at IR 1.0mA;16.7V(CL) at Ipp 36A
13♦	BZW06-10B	6		A398m	IRM 5.0uA at 10.2VRM;12.6V(BR) max at IR 1.0mA;16.7V(CL) at Ipp 36A;Bidirectional
14♦	BZW06-11	6		A398m	IRM 5.0uA at 11.1VRM;13.7V(BR) max at IR 1.0mA;18.2V(CL) at Ipp 33A
15♦	BZW06-11B	6		A398m	IRM 5.0uA at 11.1VRM;13.7V(BR) max at IR 1.0mA;18.2V(CL) at Ipp 33A;Bidirectional
16♦	BZW06-13	6		A398m	IRM 5.0uA at 12.8VRM;15.8V(BR) max at IR 1.0mA;21.2V(CL) at Ipp 28A
17♦	BZW06-13B	6		A398m	IRM 5.0uA at 12.8VRM;15.8V(BR) max at IR 1.0mA;21.2V(CL) at Ipp 28A;Bidirectional
18♦	BZW06-14	6		A398m	IRM 5.0uA at 13.6VRM;16.8V(BR) max at IR 1.0mA;22.5V(CL) at Ipp 27A
19♦	BZW06-14B	6		A398m	IRM 5.0uA at 13.6VRM;16.8V(BR) max at IR 1.0mA;22.5V(CL) at Ipp 27A;Bidirectional
20♦	BZW06-15	6		A398m	Irm 5.0uA at 15.
21♦	BZW06-15B	6		A398m	Irm 5.0uA at 15.3 Vrm; 18.9 V(BR) max at Ir 1.0mA;25.2 V(CL) at Ipp 24A;Bidirectional
22♦	BZW06-17	6		A398m	IRM 5.0uA at 17.1VRM;21V(BR) max at IR 1.0mA;27.7V(CL) at Ipp 22A
23♦	BZW06-17B	6		A398m	IRM 5.0uA at 17.1VRM;21V(BR) max at IR 1.0mA;27.7V(CL) at Ipp 22A;Bidirectional
24	BZW06-19	6		A398m	IRM 5.0uA at 18.8VRM;23.1V(BR) max at IR 1.0mA;30.6V(CL) at Ipp 20A
25	BZW06-19B	6		A398m	IRM 5.0uA at 18.8VRM;23.1V(BR) max at IR 1.0mA;30.6V(CL) at Ipp 20A;Bidirectional
26	BZW06-20	6		A398m	IRM 5.0uA at 20.5VRM;25.2V(BR) max at IR 1.0mA;33.2V(CL) at Ipp 18A
27	BZW06-20B	6		A398m	IRM 5.0uA at 20.5VRM;25.2V(BR) max at IR 1.0mA;33.2V(CL) at Ipp 18A;Bidirectional
28	BZW06-23	6		A398m	IRM 5.0uA at 23.1VRM;28.4V(BR) max at IR 1.0mA;37.5V(CL) at Ipp 16A
29	BZW06-23B	6		A398m	IRM 5.0uA at 23.1VRM;28.4V(BR) max at IR 1.0mA;37.5V(CL) at Ipp 16A;Bidirectional
30	BZW06-26	6		A398m	IRM 5.0uA at 25.6VRM;31.5V(BR) max at IR 1.0mA;41.4V(CL) at Ipp 14.5A
31	BZW06-26B	6		A398m	IRM 5.0uA at 25.6VRM;31.5V(BR)m ax at IR 1.0mA;41.4V(CL) at Ipp 14.5A;Bidirectional
32	BZW06-28	6		A398m	IRM 5.0uA at 28.2VRM;34.7V(BR) max at IR 1.0mA;45.7V(CL) at Ipp 13.1A
33	BZW06-28B	6		A398m	IRM 5.0uA at 28.2VRM;34.7V(BR) at IR 1.0mA;45.7V(CL) at Ipp 13.1A;Bidirectional
34	BZW06-31	6		A398m	IRM 5.0uA at 30.8VRM;37.8V(BR) max at IR 1.0mA;49.9V(CL) at Ipp 12A
35	BZW06-31B	6		A398m	IRM 5.0uA at 30.8VRM;37.8V(BR) max at IR 1.0mA;49.9V(CL) at Ipp 12A;Bidirectional
36	BZW06-33	6		A398m	IRM 5.0uA at 33.3VRM;41V(BR) max at IR 1.0mA;53.9V(CL) at Ipp 11.1A
37	BZW06-33B	6		A398m	IRM 5.0uA at 33.3VRM;41V(BR) max at IR 1.0mA;53.9V(CL) at Ipp 11.1A;Bidirectional
38	BZW06-37	6		A398m	IRM 5.0uA at 36.8VRM;45.2V(BR) max at IR 1.0mA;59.3V(CL) at Ipp 10.1A
39	BZW06-37B	6		A398m	IRM 5.0uA at 36.8VRM;45.2V(BR) max at IR 1.0mA;59.3V(CL) at Ipp 10.1A;Bidirectional
40	BZW06-40	6		A398m	IRM 5.0uA at 40.2VRM;49.4V(BR) max at IR 1.0mA;64.8V(CL) at Ipp 9.3A
41	BZW06-40B	6		A398m	IRM 5.0uA at 40.2VRM;49.4V(BR) max at IR 1.0mA;64.8V(CL) at Ipp 9.3A;Bidirectional
42	BZW06-44	6		A398m	IRM 5.0uA at 43.6VRM;53.6V(BR) max at IR 1.0mA;70.1V(CL) at Ipp 8.6A
43	BZW06-44B	6		A398m	IRM 5.0uA at 43.6VRM;53.6V(BR) max at IR 1.0mA;70.1V(CL) at Ipp 8.6A;Bidirectional
44	BZW06-48	6		A398m	IRM 5.0uA at 47.8VRM;58.8V(BR) max at IR 1.0mA;77V(CL) at Ipp 7.8A
45	BZW06-48B	6		A398m	IRM 5.0uA at 47.8VRM;58.8V(BR) max at IR 1.0mA;77V(CL) at Ipp 7.8A;Bidirectional
46	BZW06-53	6		A398m	IRM 5.0uA at 53VRM;65.1V(BR) max at IR 1.0mA;85V(CL) at Ipp 7.1A
47	BZW06-53B	6		A398m	IRM 5.0uA at 53VRM;65.1V(BR) max at IR 1.0mA;85V(CL) at Ipp 7.1A;Bidirectional
48	BZW06-58	6		A398m	IRM 5.0uA at 58.1VRM;71.4V(BR) max at IR 1.0mA;92V(CL) at Ipp 6.5A
49	BZW06-58B	6		A398m	IRM 5.0uA at 58.1VRM;71.4V(BR) max at IR 1.0mA;92V(CL) at Ipp 6.5A;Bidirectional
50	BZW06-64	6		A398m	IRM 5.0uA at 64.1VRM;78.8V(BR) max at IR 1.0mA;103V(CL) at Ipp 5.8A
51	BZW06-64B	6		A398m	IRM 5.0uA at 64.1VRM;78.8V(BR) max at IR 1.0mA;103V(CL) at Ipp 5.8A;Bidirectional
52	BZW06-70	6		A398m	IRM 5.0uA at 70.1VRM;86.1V(BR) max at IR 1.0mA;113V(CL) at Ipp 5.3A
53	BZW06-70B	6		A398m	IRM 5.0uA at 70.1VRM;86.1V(BR) max at IR 1.0mA;113V(CL) at Ipp 5.3A;Bidirectional
54	BZW06-78	6		A398m	IRM 5.0uA at 77.8VRM;95.5V(BR) max at IR 1.0mA;125V(CL) at Ipp 4.8A
55	BZW06-78B	6		A398m	IRM 5.0uA at 77.8VRM;95.5V(BR) max at IR 1.0mA;125V(CL) at Ipp 4.8A;Bidirectional
56	BZW06-85	6		A398m	IRM 5.0uA at 85.5VRM;105V(BR) max at IR 1.0mA;137V(CL) at Ipp 4.4A
57	BZW06-85B	6		A398m	IRM 5.0uA at 85.5VRM;105V(BR) max at IR 1.0mA;137V(CL) at Ipp 4.4A;Bidirectional
58	BZW06-94	6		A398m	IRM 5.0uA at 94VRM;116V(BR) max at IR 1.0mA;152V(CL) at Ipp 3.9A
59	BZW06-94B	6		A398m	IRM 5.0uA at 94VRM;116V(BR) max at IR 1.0mA;152V(CL) at Ipp 3.9A;Bidirectional
60	BZW06-102	6		A398m	IRM 5.0uA at 102VRM;126V(BR) max at IR 1.0mA;165V(CL) at Ipp 3.6A
61	BZW06-102B	6		A398m	IRM 5.0uA at 102VRM;126V(BR) max at IR 1.0mA;165V(CL) at Ipp 3.6A;Bidirectional
62	BZW06-111	6		A398m	IRM 5.0uA at 111VRM;137V(BR) max at IR 1.0mA;179V(CL) at Ipp 3.4A
63	BZW06-111B	6		A398m	IRM 5.0uA at 111VRM;137V(BR) max at IR 1.0mA;179V(CL) at Ipp 3.4A;Bidirectional
64	BZW06-128	6		A398m	IRM 5.0uA at 128VRM;158V(BR) max at IR 1.0mA;207V(CL) at Ipp 2.9A
65	BZW06-128B	6		A398m	IRM 5.0uA at 128VRM;158V(BR) max at IR 1.0mA;207V(CL) at Ipp 2.9A;Bidirectional
66	BZW06-136	6		A398m	IRM 5.0uA at 136VRM;168V(BR) max at IR 1.0mA;219V(CL) at Ipp 2.7A
67	BZW06-136B	6		A398m	IRM 5.0uA at 136VRM;168V(BR) max at IR 1.0mA;219V(CL) at Ipp 2.7A;Bidirectional
68	BZW06-145	6		A398m	IRM 5.0uA at 145VRM;179V(BR) max at IR 1.0mA;234V(CL) at Ipp 2.6A
69	BZW06-145B	6		A398m	IRM 5.0uA at 145VRM;179V(BR) max at IR 1.0mA;234V(CL) at Ipp 2.6A;Bidirectional
70	BZW06-154	6		A398m	IRM 5.0uA at 154VRM;189V(BR) max at IR 1.0mA;246V(CL) at Ipp 2.4A
71	BZW06-154B	6		A398m	IRM 5.0uA at 154VRM;189V(BR) max at IR 1.0mA;246V(CL) at Ipp 2.4A;Bidirectional
72	BZW06-171	6		A398m	IRM 5.0ua at 171VRM;210V(BR) max at IR 1.0mA;274V(CL) at Ipp 2.2A
73	BZW06-171B	6		A398m	IRM 5.0ua at 171VRM;210V(BR) max at IR 1.0mA;274V(CL) at Ipp 2.2A;Bidirectional
74	BZW06-188	6		A398m	IRM 5.0uA at 188 VRM;231 V(BR) max at IR 1.0mA;301 V(CL) at Ipp 2.0A
75	BZW06-188B	6		A398m	IRM 5.0uA at 188 VRM;231 V(BR) max at IR 1.0mA;301 V(CL) at Ipp 2.0A;Bidirectional
76	BZW06-213	6		A398m	IRM 5.0uA at 213 VRM;263 V(BR) max at IR 1.0mA;344 V(CL) at Ipp 2.0A
77	BZW06-213B	6		A398m	IRM 5.0uA at 213 VRM;263 V(BR) max at IR 1.0mA;344 V(CL) at Ipp 2.0A;Bidirectional
78	BZW06-239	6		A398m	IRM 5.0uA at 239 VRM;294 V(BR) max at IR 1.0mA;384 V(CL) at Ipp 2.0A
79	BZW06-239B	6		A398m	IRM 5.0uA at 239 VRM;294 V(BR) max at IR 1.0mA;384 V(CL) at Ipp 2.0A;Bidirectional
80	BZW06-256	6		A398m	IRM 5.0uA at 256 VRM;315 V(BR) max at IR 1.0mA;414 V(CL) at Ipp 1.6A
81	BZW06-256B	6		A398m	IRM 5.0uA at 256 VRM;315 V(BR) max at IR 1.0mA;414 V(CL) at Ipp 1.6A;Bidirectional
82	BZW06-273	6		A398m	IRM 5.0uA at 273 VRM;336 V(BR) max at IR 1.0mA;438 V(CL) at Ipp 1.6A
83	BZW06-273B	6		A398m	IRM 5.0uA at 273 VRM;336 V(BR) max at IR 1.0mA;438 V(CL) at Ipp 1.6A;Bidirectional
84	BZW06-299	6		A398m	IRM 5.0A at 299 VRM;368 V(BR) max at IR 1.0mA;482 V(CL) at Ipp 1.6A
85	BZW06-299B	6		A398m	IRM 5.0uA at 299 VRM;368 V(BR) max at 1.0mA;482 V(CL) at Ipp 1.6A;Bidirectional
86	BZW06-342	6		A398m	IRM 5.0uA at 342 VRM;420 V(BR) max at 1.0mA;548 V(CL) at Ipp 1.3A
87	BZW06-342B	6		A398m	IRM 5.0uA at 342 VRM;420 V(BR) max at 1.0mA;548 V(CL) at Ipp 1.3A;Bidirectional
88	BZW06-376	6		A398m	IRM 5.0uA at 376 VRM;462 V(BR) max at 1.0mA;603 V(CL) at Ipp 1.3A
89	BZW06-376B	6		A398m	IRM 5.0uA at 376 VRM;462 V(BR) max at 1.0mA;603 V(CL) at Ipp 1.3A;Bidirectional
90	BZW06P5V8	6		A398m	IRM 1.0mA at 5.8VRM;7.48V(BR) max at 10mA;10.5V(CL) at Ipp 57A
91	BZW06P5V8B	6		A398m	IRM 1.0mA at 5.8VRM;7.48V(BR) max at 10mA;10.5V(CL) at Ipp 57A
92	BZW06P6V4	6		A398m	IRM 500uA at 6.4VRM;8.25V(BR) max at IR 10mA;11.3V(CL) at Ipp 53A
93	BZW06P6V4B	6		A398m	IRM 500uA at 6.4VRM;8.25V(BR) max at IR 10mA;11.3V(CL) at Ipp 53A;Bidirect
94	BZW06P7V0	6		A398m	IRM 200uA at 7.02VRM;9.02V(BR) max at IR 10mA;12.1V(CL) at Ipp 50A
95	BZW06P7V0B	6		A398m	IRM 200uA at 7.02VRM;9.02V(BR) max at IR 10mA;12.1V(CL) at Ipp 50A;Bidirect
96	BZW06P7V8	6		A398m	IRM 50uA at 7.78VRM;10(V(BR) max at IR 1.0mA;13.4V(CL) at Ipp 45A
97	BZW06P7V8B	6		A398m	IRM 50uA at 7.78VRM;10(V(BR) max at IR 1.0mA;13.4V(CL) at Ipp 45A;Bidirect
98♦	BZW06P8V5	6		A398m	IRM 10uA at 8.55VRM;11V(BR) max at IR 1.0mA;14.5V(CL) at Ipp 41A
99♦	BZW06P8V5B	6		A398m	IRM 10uA at 8.55VRM;11V(BR) max at IR 1.0mA;14.5V(CL) at Ipp 41A;Bidirectional
100	BZW06P9V4	6		A398m	IRM 5.0uA at 9.4VRM;12.1V(BR) max at IR 1.0mA;15.6V(CL) at Ipp 48A
101	BZW06P9V4B	6		A398m	IRM 5.0uA at 9.4VRM;12.1V(BR) max at IR 1.0mA;15.6V(CL) at Ipp 48A;Bidirectional
102	BZW06P10	6		A398m	IRM 5.0uA at 10.2VRM;13.2V(BR) max at IR 1.0mA;16.7V(CL) at Ipp 36A
103	BZW06P10B	6		A398m	IRM 5.0uA at 10.2VRM;13.2V(BR) max at IR 1.0mA;16.7V(CL) at Ipp 36A;Bidirectional
104	BZW06P11	6		A398m	IRM 5.0uA at 11.1VRM;14.3V(BR) max at IR 1.0mA;18.2V(CL) at Ipp 33A
105	BZW06P11B	6		A398m	IRM 5.0uA at 11.1VRM;14.3V(BR) max at IR 1.0mA;18.2V(CL) at Ipp 33A;Bidirectional
106	BZW06P13	6		A398m	IRM 5.0uA at 12.8VRM;16.5V(BR) max at IR 1.0mA;21.2V(CL) at Ipp 28A
107	BZW06P13B	6		A398m	IRM 5.0uA at 12.8VRM;16.5V(BR) max at IR 1.0mA;21.2V(CL) at Ipp 28A;Bidirectional
108	BZW06P14	6		A398m	IRM 5.0uA at 13.6VRM;17.6V(BR) max at IR 1.0mA;22.5V(CL) at Ipp 27A
109	BZW06P14B	6		A398m	IRM 5.0uA at 13.6VRM;17.6V(BR) max at IR 1.0mA;22.5V(CL) at Ipp 27A;Bidirectional
110	BZW06P15	6		A398m	IRM 5.0uA at 15.3VRM;19.8V(BR) max at IR 1.0mA;25.2V(CL) at Ipp 24A

7. TRANSIENT SUPPRESSOR DIODES - Bipolar & Unipolar Types (Cont'd)

IN ORDER OF (1) TYPE (2) MAT AND (3) TYPE NO.

LINE No.	3 TYPE NUMBER	1 TYPE	2 MAT.	DWG. NO.	DESCRIPTION
1	BZW06P15B	6		A398m	IRM 5.0uA at 15.3VRM;19.8V(BR) max at IR 1.0mA;25.2V(CL) at Ipp 24A;Bidirectional
2	BZW06P17	6		A398m	IRM 5.0uA at 17.1VRM;22V(BR) max at IR 1.0mA;27.7V(CL) at Ipp 22A
3	BZW06P17B	6		A398m	IRM 5.0uA at 17.1VRM;22V(BR) max at IR 1.0mA;27.7V(CL) at Ipp 22A;Bidirectioanl
4	BZW06P19	6		A398m	IRM 5.0uA at 18.8VRM;24.2V(BR) max at IR 1.0mA;30.6V(CL) at Ipp 20A nl
5	BZW06P19B	6		A398m	IRM 5.0uA at 18.8VRM;24.2V(BR) max at IR 1.0mA;30.6V(CL) at Ipp 20A;Bidirectional
6	BZW06P20	6		A398m	IRM 5.0uA at 20.5VRM;26.4V(BR) at IR 1.0mA;33.2V(CL) at Ipp 18A
7	BZW06P20B	6		A398m	IRM 5.0uA at 20.5VRM;26.4V(BR) at IR 1.0mA;33.2V(CL) at Ipp 18A;Bidirectional
8	BZW06P23	6		A398m	IRM 5.0uA at 23.1VRM;29.7V(BR) at IR 1.0mA;37.5V(CL) at Ipp 16A
9	BZW06P23B	6		A398m	IRM 5.0uA at 23.1VRM;29.7V(BR) at IR 1.0mA;37.5V(CL) at Ipp 16A;Bidirectional
10	BZW06P26	6		A398m	IRM 5.0uA at 25.6VRM;33V(BR) at IR 1.0mA;41.4V(CL) at Ipp 14.5A
11	BZW06P26B	6		A398m	IRM 5.0uA at 25.6VRM;33V(BR) at IR 1.0mA;41.4V(CL) at Ipp 14.5A;Bidirectional
12	BZW06P28	6		A398m	IRM 5.0uA at 28.2VRM;36.3V(BR) at IR 1.0mA;45.7V(CL) at Ipp 13.1A
13	BZW06P28B	6		A398m	IRM 5.0uA at 28.2VRM;36.3V(BR) at IR 1.0mA;45.7V(CL) at Ipp 13.1A;Bidirectional
14	BZW06P31	6		A398m	IRM 5.0uA at 30.8VRM;39.6V(BR) at IR 1.0mA;49.9V(CL) at Ipp 12A
15	BZW06P31B	6		A398m	IRM 5.0uA at 30.8VRM;39.6V(BR) at IR 1.0mA;49.9V(CL) at Ipp 12A;Bidirectional
16	BZW06P33	6		A398m	IRM 5.0uA at 33.3VRM;42.9V(BR) at IR 1.0mA;53.9V(CL) at Ipp 11.1A
17	BZW06P33B	6		A398m	IRM 5.0uA at 33.3VRM;42.9V(BR) max at IR 1.0mA;53.9V(CL) at Ipp 11.1A;Bidirectional
18	BZW06P37	6		A398m	IRM 5.0uA at 36.8VRM;47.3V(BR) max at IR 1.0mA;59.3V(CL) at Ipp 10.1A
19	BZW06P37B	6		A398m	IRM 5.0uA at 36.8VRM;47.3V(BR) max at IR 1.0mA;59.3V(CL) at Ipp 10.1A;Bidirectional
20	BZW06P40	6		A398m	IRM 5.0uA at 40.2VRM;51.7V(BR) max at IR 1.0mA;64.8V(CL) at Ipp 9.3A
21	BZW06P40B	6		A398m	IRM 5.0uA at 40.2VRM;51.7V(BR) max at IR 1.0mA;64.8V(CL) at Ipp 9.3A;Bidirectional
22	BZW06P44	6		A398m	IRM 5.0uA at 43.6VRM;56.1V(BR) max at IR 1.0mA;70.1V(CL) at Ipp 8.6A
23	BZW06P44B	6		A398m	IRM 5.0uA at 43.6VRM;56.1V(BR) max at IR 1.0mA;70.1V(CL) at Ipp 8.6A;Bidirectional
24	BZW06P48	6		A398m	IRM 5.0uA at 47.8VRM;61.6V(BR) max at IR 1.0mA;77V(CL) at Ipp 7.8A
25	BZW06P48B	6		A398m	IRM 5.0uA at 47.8VRM;61.6V(BR) max at IR 1.0mA;77V(CL) at Ipp 7.8A;Bidirectional
26	BZW06P53	6		A398m	IRM 5.0uA at 53VRM;68.2V(BR) max at IR 1.0mA;85V(CL) at Ipp 7.1A
27	BZW06P53B	6		A398m	IRM 5.0uA at 53VRM;68.2V(BR) max at IR 1.0mA;85V(CL) at Ipp 7.1A;Bidirectional
28	BZW06P58	6		A398m	IRM 5.0uA at 58.1VRM;74.8V(BR) max at IR 1.0mA;92V(CL) at Ipp 6.5A
29	BZW06P58B	6		A398m	IRM 5.0uA at 58.1VRM;74.8V(BR) max at IR 1.0mA;92V(CL) at Ipp 6.5A;Bidirectional
30	BZW06P64	6		A398m	IRM 5.0uA at 64.1VRM;82.5V(BR) max at IR 1.0mA;103V(CL) at Ipp 5.8A
31	BZW06P64B	6		A398m	IRM 5.0uA at 64.1VRM;82.5V(BR) max at IR 1.0mA;103V(CL) at Ipp 5.8A;Bidirectional
32	BZW06P70	6		A398m	IRM 5.0uA at 70.1VRM;90.2V(BR) max at IR 1.0mA;113V(CL) at Ipp 5.3A
33	BZW06P70B	6		A398m	IRM 5.0uA at 70.1VRM;90.2V(BR) max at IR 1.0mA;113V(CL) at Ipp 5.3A;Bididirectional
34♦	BZW06P78	6		A398m	IRM 5.0uA at 77.8VRM;100V(BR) max at IR 1.0mA;125V(CL) at Ipp 4.8A
35♦	BZW06P78B	6		A398m	IRM 5.0uA at 77.8VRM;100V(BR) max at IR 1.0mA;125V(CL) at Ipp 4.8A;Bidirectional
36	BZW06P85	6		A398m	IRM 5.0uA at 85.5VRM;110V(BR) max at IR 1.0mA;137V(CL) at Ipp 4.4A
37	BZW06P85B	6		A398m	IRM 5.0uA at 85.5VRM;110V(BR) max at IR 1.0mA;137V(CL) at Ipp 4.4A;Bidirectional
38	BZW06P94	6		A398m	IRM 5.0uA at 94VRM;121V(BR) max at IR 1.0mA;152V(CL) at Ipp 3.9A
39	BZW06P94B	6		A398m	IRM 5.0uA at 94VRM;121V(BR) max at IR 1.0mA;152V(CL) at Ipp 3.9A;Bidirectional
40	BZW06P102	6		A398m	IRM 5.0uA at 102VRM;132V(BR) max at IR 1.0mA;165V(CL) at Ipp 3.6A
41	BZW06P102B	6		A398m	IRM 5.0uA at 102VRM;132V(BR) max at IR 1.0mA;165V(CL) at Ipp 3.6A;Bidirectional
42	BZW06P111	6		A398m	IRM 5.0uA at 111VRM;143V(BR) max at IR 1.0mA;179V(CL) at Ipp 3.4A
43	BZW06P111B	6		A398m	IRM 5.0uA at 111VRM;143V(BR) max at IR 1.0mA;179V(CL) at Ipp 3.4A;Bidirectional
44	BZW06P128	6		A398m	IRM 5.0uA at 128VRM;165V(BR) max at IR 1.0mA;207V(CL) at Ipp 2.9A
45	BZW06P128B	6		A398m	IRM 5.0uA at 128VRM;165V(BR) max at IR 1.0mA;207V(CL) at Ipp 2.9A;Bidirectional
46	BZW06P136	6		A398m	IRM 5.0uA at 136VRM;176V(BR) max at IR 1.0mA;219V(CL) at Ipp 2.7A
47	BZW06P136B	6		A398m	IRM 5.0uA at 136VRM;176V(BR) max at IR 1.0mA;219V(CL) at Ipp 2.7A;Bidirectional
48	BZW06P145	6		A398m	IRM 5.0uA at 145VRM;187V(BR) max at IR 1.0mA;234V(CL) at Ipp 2.6A
49	BZW06P145B	6		A398m	IRM 5.0uA at 145VRM;187V(BR) max at IR 1.0mA;234V(CL) at Ipp 2.6A;Bidirectional
50	BZW06P154	6		A398m	IRM 5.0uA at 154VRM;198V(BR) max at IR 1.0mA;246V(CL) at Ipp 2.4A
51	BZW06P154B	6		A398m	IRM 5.0uA at 154VRM;198V(BR) max at IR 1.0mA;246V(CL) at Ipp 2.4A;Bidirectional
52	BZW06P171	6		A398m	IRM 5.0uA at 171VRM;220V(BR) max at IR 1.0mA;274V(CL) at Ipp 2.2A
53	BZW06P171B	6		A398m	IRM 5.0uA at 171 VRM;220 V(BR) max at IR 1.0mA;274 V(CL) at Ipp 2.2A;Bidirectional
54	BZW06P188	6		A398m	IRM 5.0uA at 188 VRM;242 V(BR) max at IR 1.0mA;301 V(CL) at Ipp 2.0A
55	BZW06P188B	6		A398m	IRM 5.0uA at 188 VRM;242 V(BR) max at IR 1.0mA;301 V(CL) at Ipp 2.0A;Bidirectional
56	BZW06P213	6		A398m	IRM 5.0uA at 213 VRM;275 V(BR) max at IR 1.0mA;344 V(CL) at Ipp 2.0A
57	BZW06P213B	6		A398m	IRM 5.0uA at 213 VRM;275 V(BR) max at IR 1.0mA;344 V(CL) at Ipp 2.0A;Bidirectional
58	BZW06P239	6		A398m	IRM 5.0uA at 239 VRM;308 V(BR) max at IR 1.0mA;384 V(CL) at Ipp 2.0A
59	BZW06P239B	6		A398m	IRM 5.0uA at 239 VRM;308 V(BR) max at IR 1.0mA;384 V(CL) at Ipp 2.0A;Bidirectional
60	BZW06P256	6		A398m	IRM 5.0uA at 256 VRM;330 V(BR) max at IR 1.0mA;414 V(CL) at Ipp 1.6A
61	BZW06P256B	6		A398m	IRM 5.0uA at 256 VRM;330 V(BR) max at IR 1.0mA;414 V(CL) at Ipp 1.6A;Bidirectional
62	BZW06P273	6		A398m	IRM 5.0uA at 273 VRM;352 V(BR) max at IR 1.0mA;438 V(CL) at Ipp 1.6A
63	BZW06P273B	6		A398m	IRM 5.0uA at 273 VRM;352 V(BR) max at IR 1.0mA;438 V(CL) at Ipp 1.6A;Bidirectional
64	BZW06P299	6		A398m	IRM 5.0A at 299 VRM;385 V(BR) max at IR 1.0mA;482 V(CL) at Ipp 1.6A
65	BZW06P299B	6		A398m	IRM 5.0A at 299 VRM;385 V(BR) max at IR 1.0mA;482 V(CL) at Ipp 1.6A;Bidirectional
66	BZW06P342	6		A398m	IRM 5.0uA at 342 VRM;440 V(BR) max at 1.0mA;548 V(CL) at Ipp 1.3A
67	BZW06P342B	6		A398m	IRM 5.0uA at 342 VRM;440 V(BR) max at 1.0mA;548 V(CL) at Ipp 1.3A;Bidirectional
68	BZW06P376	6		A398m	IRM 5.0uA at 376 VRM;484 V(BR) max at 1.0mA;603 V(CL) at Ipp 1.3A
69	BZW06P376B	6		A398m	IRM 5.0uA at 376 VRM;484 V(BR) max at 1.0mA;603 V(CL) at Ipp 1.3A;Bidirectional
70	BZW25-12	6		M981	IRM 5.0uA at 12.0VRM;16.5V(BR) max at IR 1.0mA;21.9V(CL) at Ipp 114A
71	BZW25-12B	6		M981	IRM 5.0uA at 12 VRM;16.5 V(BR) max at 1.0mA;21.9 V(CL) at Ipp 114A;Bidirectional
72	BZW25-24	6		M981	IRM 5.0uA at 24.0VRM;33.0V(BR) max at IR 1.0mA;43.8V(CL) at Ipp 57A
73	BZW25-24B	6		M981	IRM 5.0uA at 24 VRM;33.0 V(BR) max at 1.0mA;43.8 V(CL) at Ipp 57A;Bidirectional
74	BZW25-47	6		M981	IRM 5.0uA at 47.0VRM;61.6V(BR) max at IR 1.0mA;81.9V(CL) at Ipp 30.5A
75	BZW25-47B	6		M981	IRM 5.0uA at 47 VRM;66.6 V(BR) max at 1.0mA;81.9 V(CL) at Ipp 30.5A;Bidirectional
76	BZW25-120	6		M981	IRM 5.0uA at 120VRM;165V(BR) max at IR 1.0mA;219V(CL) at Ipp 11A
77	BZW25-120B	6		M981	IRM 5.0uA at 120VRM;165V(BR) max at 1.0mA;219V(CL) at Ipp 11A;Bidirectional
78	BZW30-13	6		A69ai	IRM 5.0uA at 13.0VRM;17.6 V(BR) max at IR 1.0mA;25V(CL) at Ipp 120A
79	BZW30-15	6		A69ai	IRM 5.0uA at 14.6VRM;19.8 V(BR) max at IR 1.0mA;27.5V(CL) at Ipp 109A
80	BZW30-16	6		A69ai	IRM 5.0uA at 16.2VRM;22.0 V(BR) max at IR 1.0mA;30V(CL) at Ipp 100A
81	BZW30-18	6		A69ai	IRM 5.0uA at 17.8VRM;24.2 V(BR) max at IR 1.0mA;32.3V(CL) at Ipp 93A
82	BZW30-19	6		A69ai	IRM 5.0uA at 19.4VRM;26.4 V(BR) max at IR 1.0mA;34.5V(CL) at Ipp 87A
83	BZW30-22	6		A69ai	IRM 5.0uA at 21.8VRM;29.7 V(BR) max at IR 1.0mA;38V(CL) at Ipp 79A
84	BZW30-29	6		A69ai	IRM 5.0uA at 29.1VRM;39.6V(BR) max at 1.0mA;53.1V(CL) at Ipp 56.5A
85	BZW30-32	6		DO27	Voltage Suppressor;V(BR) 42.9V max;IRM 5uA at VRM 31.6V
86	BZW30-35	6		A69ai	IRM 5.0uA at 34.8VRM;47.3V(BR) max at 1.0mA;63.8V(CL) at Ipp 47A
87	BZW30-38	6		A69ai	IRM 5.0uA at 38.1VRM;51.7V(BR) max at 1.0mA;69.8V(CL) at Ipp 43A
88	BZW30-41	6		A69ai	IRM 5.0uA at 41.3VRM;56.1V(BR) max at 1.0mA;73.7V(CL) at Ipp 40.7A
89	BZW30-45	6		A69ai	IRM 5.0uA at 45.4VRM;61.6V(BR) max at 1.0mA;77.9V(CL) at Ipp 38.5A
90	BZW30-50	6		A69ai	IRM 5.0uA at 50.2VRM;68.2V(BR) max at 1.0mA;87V(CL) at Ipp 34.5A
91	BZW30-55	6		A69ai	IRM 5.0uA at 55.1VRM;74.8V(BR) max at 1.0mA;95.2V(CL) at Ipp 31.5A
92	BZW30-61	6		A69ai	IRM 5.0uA at 60.7VRM;82.5V(BR) max at 1.0mA;108V(CL) at Ipp 27.7A
93	BZW30-66	6		A69ai	IRM 5.0uA at 66.4VRM;90.2V(BR) max at 1.0mA;119V(CL) at Ipp 25.2A
94	BZW30-74	6		A69ai	IRM 5.0uA at 73.7VRM;100V(BR) max at 1.0mA;135V(CL) at Ipp 22.2A
95	BZW30-81	6		A69ai	IRM 5.0uA at 81.0VRM;110V(BR) max at 1.0mA;147V(CL) at Ipp 20.4A
96	BZW30-89	6		A69ai	IRM 5.0uA at 89.2VRM;121V(BR) max at 1.0mA;161V(CL) at Ipp 18.6A
97	BZW30-97	6		A69ai	IRM 5.0uA at 97.2VRM;132V(BR) max at 1.0mA;178V(CL) at Ipp 16.9A
98	BZW30-105	6		A69ai	IRM 5.0uA at 105VRM;143V(BR) max at 1.0mA;186V(CL) at Ipp 16.1A
99	BZW30-121	6		A69ai	IRM 5.0uA at 121VRM;165V(BR) max at 1.0mA;216V(CL) at Ipp 13.9A
100	BZW30-130	6		A69ai	IRM 5.0uA at 130VRM;176V(BR) max at 1.0mA;231V(CL) at Ipp 13.0A
101	BZW30-138	6		A69ai	IRM 5.0uA at 138VRM;187V(BR) max at 1.0mA;242V(CL) at Ipp 12.4A
102	BZW30-146	6		A69ai	IRM 5.0uA at 146VRM;198V(BR) max at 1.0mA;263V(CL) at Ipp 11.4A
103	BZW30-162	6		A69ai	IRM 5.0uA at 162VRM;220V(BR) max at 1.0mA;288V(CL) at Ipp 10.4A
104	BZW30-175	6		A69ai	IRM 5.0uA at 175VRM;242V(BR) max at 1.0mA;316V(CL) at Ipp 9.5A
105	BZW30-202	6		A69ai	IRM 5.0uA at 202VRM;275V(BR) max at 1.0mA;361V(CL) at Ipp 8.3A
106	BZW30-243	6		A69ai	IRM 5.0uA at 243VRM;330V(BR) max at IR 1.0mA;429V(CL) at Ipp 7.0A
107	BZW30-283	6		A69ai	IRM 5.0uA at 283VRM;385V(BR) max at IR 1.0mA;500V(CL) at Ipp 6.0A
108	BZW30-324	6		A69ai	IRM 5.0uA at 324VRM;440V(BR) max at IR 1.0mA;575V(CL) at Ipp 5.2A
109	BZW30-405	6		A69ai	IRM 5.0uA at 405VRM;550V(BR) max at 1.0mA;720V(CL) at Ipp 4.2A
110	BZW30-486	6		A69ai	IRM 5.0uA at 486VRM;660V(BR) max at 1.0mA;860V(CL) at Ipp 3.5A

SYMBOLS AND CODES EXPLAINED IN INTERPRETER

7. TRANSIENT SUPPRESSOR DIODES – Bipolar & Unipolar Types (Cont'd)

IN ORDER OF (1) TYPE (2) MAT AND (3) TYPE NO.

LINE No.	3 TYPE NUMBER	1 TYPE	2 MAT.	DWG. NO.	DESCRIPTION
1	DAG1A1	6	Δ	A313d	Suppression Diode;Vr 100V;IF (av) 1.3A;VF 1.1V at IF 1.3A
2	DAG1A2	6	Δ	A313d	Suppression Diode;Vr 200V;IF (av) 1.3A;VF 1.1V at IF 1.3A
3	DAG1A3	6	Δ	A313d	Suppression Diode;Vr 300V;IF (av) 1.3A;VF 1.1V at IF 1.3A
4	DAG1A4	6	Δ	A313d	Suppression Diode;Vr 400V;IF (av) 1.3A;VF 1.1V at IF 1.3A
5	DAG1A05	6	Δ	A313d	Suppression Diode;Vr 50V;IF (av) 1.3A;VF 1.1V at IF 1.3A
6	DTZ6V8A	6		A398k	IRM 1.0mA at 5.8VRM;7.14V(BR) max at 10mA;10.5V(CL) at Ipp 143A;Bidirectional
7	DTZ6V8P	6		A398k	IRM 1.0mA at 5.8VRM;7.48V(BR) max at 10mA;10.5V(CL) at Ipp 143A;Bidirectional
8	DTZ7V5P	6		A398k	IRM 500uA at 6.4VRM;8.25V(BR) max at IR 10mA;11.3V(CL) at Ipp 132A;Bidirectional
9	DTZ8V2P	6		A398k	IRM 200uA at 7.02VRM;9.02V(BR) max at IR 10mA;12.1V(CL) at Ipp 124A;Bidirectional
10	DTZ9V1P	6		A398k	IRM 50uA at 7.78VRM;10V(BR) max at IR 1.0mA;13.4V(CL) at Ipp 112A;Bidirectional
11	DTZ10P	6		A398k	IRM 10mA at 8.55VRM;11V(BR) max at IR 1.0mA;14.5V(CL) at Ipp 103A;Bidirectional
12	DTZ11P	6		A398k	IRM 5.0uA at 9.4VR4;12.1V(BR) max at IR 1.0mA;15.6V(CL) at Ipp 96A;Bidirectional
13	DTZ12P	6		A398k	IRM 5.0uA at 10.2VR4;13.2V(BR) max at IR 1.0mA;16.7V(CL) at Ipp 90A;Bidirectional
14	DTZ13P	6		A398k	IRM 5.0uA at 11.1VRM;14.3V(BR) max at IR 1.0mA;18.2V(CL) at Ipp 82A;Bidirectional
15	DTZ15P	6		A398k	IRM 5.0uA at 12.8VRM;16.5V(BR) max at IR 1.0mA;21.2V(CL) at Ipp 71A;Bidirectional
16	DTZ16P	6		A398k	IRM 5.0uA at 13.6VRM;17.6V(BR) max at IR 1.0mA;22.5V(CL) at Ipp 67A;Bidirectional
17	DTZ18P	6		A398k	IRM 5.0uA at 15.3VRM;19.8V(BR) max at IR 1.0mA;25.2V(CL) at Ipp 59.5A;Bidirectional
18	DTZ20P	6		A398k	IRM 5.0uA at 17.1VRM;22V(BR) max at IR 1.0mA;27.7V(CL) at Ipp 54A;Bidirectional
19	DTZ22P	6		A398k	IRM 5.0uA at 18.8VRM;24.2V(BR) max at IR 1.0mA;30.6V(CL) at Ipp 49A;Bidirectional
20	DTZ24P	6		A398k	IRM 5.1uA at 20.5VRM;26.4V(BR) max at IR 1.0mA;33.2V(CL) at Ipp 45A;Bidirectional
21	DTZ27P	6		A398k	IRM 5.0uA at 23.1VRM;29.7V(BR) max at IR 1.0mA;37.5V(CL) at Ipp 40A;Bidirectional
22	DTZ30P	6		A398k	IRM 5.0uA at 25.6VRM;33V(BR) max at IR 1.0mA;41.4V(CL) at Ipp 36A;Bidirectional
23	DTZ33P	6		A398k	IRM 5.0uA at 28.2VRM;36.3V(BR) max at IR 1.0mA;45.7V(CL) at Ipp 33A;Bidirectional
24	DTZ36P	6		A398k	IRM 5.0uA at 30.8VRM;39.6V(BR) max at IR 1.0mA;49.9V(CL) at Ipp 30A;Bidirectional
25	DTZ39P	6		A398k	IRM 5.0uA at 33.3VRM;42.9V(BR) max at IR 1.0mA;53.9V(CL) at Ipp 28A;Bidirectional
26	DTZ43P	6		A398k	IRM 5.0uA at 36.8VRM;47.3V(BR) max at IR 1.0mA;59.3V(CL) at Ipp 25.3A;Bidirectional
27	DTZ47P	6		A398k	IRM 5.0uA at 40.2VRM;51.7V(BR) max at IR 1.0mA;64.8V(CL) at Ipp 23.2A;Bidirectional
28	DTZ51P	6		A398k	IRM 5.0uA at 43.6VRM;56.1V(BR) max at IR 1.0mA;70.1V(CL) at Ipp 21.4A;Bidirectional
29	DTZ56P	6		A398k	IRM 5.0uA at 47.8VRM;61.6V(BR) max at IR 1.0mA;77V(CL) at Ipp 19.5A;Bidirectional
30	DTZ62P	6		A398k	IRM 5.0uA at 53VRM;68.2V(BR) max at IR 1.0mA;85V(CL) at Ipp 17.7A;Bidirectional
31	DTZ68P	6		A398k	IRM 5.0uA at 58.1VRM;74.8V(BR) max at IR 1.0mA;92V(CL) at Ipp 16.3A;Bidirectional
32	DTZ75P	6		A398k	IRM 5.1uA at 64.1VRM;82.5V(BR) max at IR 1.0mA;103V(CL) at Ipp 14.6A;Bidirectional
33	DTZ82P	6		A398k	IRM 5.0uA at 70.1VRM;90.2V(BR) max at IR 1.0mA;113V(CL) at Ipp 13.3A;Bidirectional
34	DTZ91P	6		A398k	IRM 5.0uA at 77.8VRM;100V(BR) max at IR 1.0mA;125V(CL) at Ipp 12A;Bidirectional
35	DTZ100P	6		A398k	IRM 5.0uA at 85.5VRM;110V(BR) max at IR 1.0mA;137V(CL) at Ipp 11A;Bidirectional
36	DTZ110P	6		A398k	IRM 5.0uA at 94VRM;121V(BR) max at IR 1.0mA;152V(CL) at Ipp 9.9A;Bidirectional
37	DTZ120P	6		A398k	IRM 5.0uA at 102VRM;132V(BR) max at IR 1.0mA;165V(CL) at Ipp 9.1A;Bidirectional
38	DTZ130P	6		A398k	IRM 5.0uA at 111VRM;143V(BR) max at IR 1.0mA;179V(CL) at Ipp 8.4A;Bidirectional
39	DTZ150P	6		A398k	IRM 5.0uA at 128VRM;165V(BR) max at IR 1.0mA;207V(CL) at Ipp 7.2A;Bidirectional
40	DTZ160P	6		A398k	IRM 5.0uA at 136VRM;176V(BR) max at IR 1.0mA;219V(CL) at Ipp 6.8A;Bidirectional
41	DTZ170P	6		A398k	IRM 5.0uA at 145VRM;187V(BR) max at IR 1.0mA;234V(CL) at Ipp 6.4A;Bidirectional
42	DTZ180P	6		A398k	IRM 5.0uA at 154VRM;198V(BR) max at IR 1.0mA;246V(CL) at Ipp 6.1A;Bidirectional
43	DTZ200P	6		A398k	IRM 5.0uA at 171VRM;220V(BR) max at IR 1.0mA;274V(CL) at Ipp 5.5A;Bidirectional
44	DTZ220P	6		A398k	IRM 5.0uA at 185VRM;242V(BR) max at IR 1.0mA;328V(CL) at Ipp 4.6A;Bidirectional
45	DTZ250A	6		A398k	IRM 5.0uA at 213VRM;263V(BR) max at IR 1.0mA;344V(CL) at Ipp 5.0A;Bidirectional
46	DTZ250P	6		A398k	IRM 5.0uA at 213VRM;275V(BR) max at IR 1.0mA;344V(CL) at Ipp 5.0A;Bidirectional
47	DTZ280A	6		A398k	IRM 5.0uA at 239VRM;294V(BR) max at IR 1.0mA;384V(CL) at Ipp 5.0A;Bidirectional
48	DTZ280P	6		A398k	IRM 5.0uA at 239VRM;308V(BR) max at IR 1.0mA;384V(CL) at Ipp 5.0A;Bidirectional
49	DTZ300A	6		A398k	IRM 5.0uA at 256VRM;315V(BR) max at IR 1.0mA;414V(CL) at Ipp 5.0A;Bidierctional
50	DTZ300P	6		A398k	IRM 5.0uA at 256VRM;300V(BR) max at IR 1.0mA;414V(CL) at Ipp 5.0A;Bidirectional
51	DTZ320A	6		A398k	IRM 5.0uA at 273VRM;336V(BR) max at IR 1.0mA;438V(CL) at Ipp 4.5A;Bidirectional
52	DTZ320P	6		A398k	IRM 5.0uA at 273VRM;352V(BR) max at IR 1.0mA;438V(CL) at Ipp 4.5A;Bidirectional
53	DTZ350A	6		A398k	IRM 5.0uA at 299VRM;368V(BR) max at IR 1.0mA;482V(CL) at Ipp 4.0A;Bidirectional
54	DTZ350P	6		A398k	IRM 5.0uA at 299VRM;385V(BR) max at IR 1.0mA;482V(CL) at Ipp 4.0A;Bidirectional
55	DTZ400A	6		A398k	IRM 5.0uA at 342VRM;420V(BR) max at IR 1.0mA;548V(CL) at Ipp 4.0A;Bidirectional
56	DTZ400P	6		A398k	IRM 5.0uA at 342VRM;440V(BR) max at IR 1.0mA;548V(CL) at Ipp 4.0A;Bidirectional
57	DTZ440A	6		A398k	IRM 5.0uA at 376VRM;462V(BR) max at IR 1.0mA;603V(CL) at Ipp 3.5A;Bidirectional
58	DTZ440P	6		A398k	IRM 5.0uA at 376VRM;484V(BR) max at IR 1.0mA;603V(CL) at Ipp 3.5A;Bidirectional
59	GMP5	6		A398n	IRM 300uA at 5VRM;5.3V(BR) max at IR 1.0mA;6.7V(CL) at Ipp 1.0A
60	GMP5A	6		A398n	IRM 100uA at 5VRM;5.5V(BR) max at IR 1.0mA;6.7V(CL) at Ipp 1.0A
61	GMP5B	6		A398n	IRM 300uA at 5VRM;5.3V(BR) max at IR 1.0mA;6.4V(CL) at Ipp 1.0A
62	GT6102	6		A94ae	IRM 100uA at 5.2VRM;7.48V(BR) max at 175mA;10.8V(CL) at Ipp 55A
63	GT6102A	6		A94ae	IRM 100uA at 5.2VRM;7.14V(BR) max at 175mA;10.5V(CL) at Ipp 57A
64	GT6103	6		A94ae	IRM 50uA at 5.7VRM;7.5V(BR) max at 175mA;11.7V(CL) at Ipp 51A
65	GT6103A	6		A94ae	IRM 50uA at 5.7VRM;7.5V(BR) max at 175mA;11.3V(CL) at Ipp 53A
66	GT6104	6		A94ae	IRM 20uA at 6.2VRM;9.02V(BR) max at 150mA;12.5V(CL) at Ipp 48A
67	GT6104A	6		A94ae	IRM 20uA at 6.2VRM;8.61V(BR) max at 150mA;12.1V(CL) at Ipp 50A
68	GT6105	6		A94ae	IRM 20uA at 6.9VRM;10.01V(BR) max at 150mA;13.8V(CL) at Ipp 43A
69	GT6105A	6		A94ae	IRM 20uA at 6.9VRM;9.55V(BR) max at 150mA;13.4V(CL) at Ipp 45A
70	GT6106	6		A94ae	IRM 20uA at 7.6VRM;11V(BR) max at 125mA;15V(CL) at Ipp 40A
71	GT6106A	6		A94ae	IRM 20uA at 7.6VRM;10.50V(BR) max at 125mA;14.5V(CL) at Ipp 41A
72	GT6107	6		A94ae	IRM 20uA at 8.4VRM;12.10V(BR) max at 125mA;16.2V(CL) at Ipp 37A
73	GT6107A	6		A94ae	IRM 20uA at 8.4VRM;11.55V(BR) max at 125mA;15.6V(CL) at Ipp 38A
74	GT6108	6		A94ae	IRM 20uA at 9.1VRM;13.20V(BR) max at 100mA;17.3V(CL) at Ipp 35A
75	GT6108A	6		A94ae	IRM 20uA at 9.1VRM;12.60V(BR) max at 100mA;16.7V(CL) at Ipp 36A
76	GT6109	6		A94ae	IRM 20uA at 9.9VRM;14.30V(BR) max at 100mA;19V(CL) at Ipp 32A
77	GT6109A	6		A94ae	IRM 20uA at 9.9VRM;13.65V(BR) max at 100mA;18.2V(CL) at Ipp 33A
78	GT6110	6		A94ae	IRM 20uA at 11.4VRM;16.50V(BR) max at 75mA;22V(CL) at Ipp 27.5A
79	GT6110A	6		A94ae	IRM 20uA at 11.4VRM;15.75V(BR) maxt at 75mA;21.2V(CL) at Ipp 28A
80	GT6111	6		A94ae	IRM 20uA at 12.2VRM;17.60V(BR) maxt at 75mA;23.5V(CL) at Ipp 26A
81	GT6111A	6		A94ae	IRM 20uA at 12.2VRM;16.80V(BR) max at 75mA;22.5V(CL) at Ipp 27A
82	GT6112	6		A94ae	IRM 1.0uA at 13.7VRM;19.80V(BR) max at 65mA;26.5V(CL) at Ipp 22.5A
83	GT6112A	6		A94ae	IRM 1.0uA at 13.7VRM;18.9V(BR) max at IR 65mA;25.2V(CL) at Ipp 24A
84	GT6113	6		A94ae	IRM 1.0uA at 15.2VRM;22.0V(BR) max at IR 65mA;29.1V(CL) at Ipp 20.5A
85	GT6113A	6		A94ae	IRM 1.0uA at 15.2VRM;21.0V(BR) max at IR 65mA;27.7V(CL) at Ipp 22A
86	GT6114	6		A94ae	IRM 1.0uA at 16.7VRM;24.2V(BR) max at IR 50mA;31.9V(CL) at Ipp 18.5A
87♦	GT6114A	6		A94ae	IRM 1.0uA at 16.7VRM;23.1V(BR) max at IR 50mA;30.6V(CL) at Ipp 20A
88♦	GT6115	6		A94ae	IRM 1.0uA at 18.2VRM;26.4V(BR) max at IR 50mA;34.7V(CL) at Ipp 17.5A
89♦	GT6115A	6		A94ae	IRM 1.0uA at 18.2VRM;25.2V(BR) max at IR 50mA;33.2V(CL) at Ipp 18A
90	GT6116	6		A94ae	IRM 1.0uA at 20.6VRM;29.7V(BR) max at IR 50mA;39.1V(CL) at Ipp 15.5A
91	GT6116A	6		A94ae	IRM 1.0uA at 20.6VRM;28.3V(BR) max at IR 50mA;37.5V(CL) at Ipp 16A
92	GT6117	6		A94ae	IRM 1.0uA at 22.8VRM;33.0V(BR) max at IR 40mA;43.5V(CL) at Ipp 13.5A
93	GT6117A	6		A94ae	IRM 1.0uA at 22.8VRM;31.5V(BR) max at IR 40mA;41.4V(CL) at Ipp 14.5A
94	GT6118	6		A94ae	IRM 1.0uA at 25.1VRM;36.3V(BR) max at IR 40mA;47.7V(CL) at Ipp 12.5A
95	GT6118A	6		A94ae	IRM 1.0uA at 25.1VRM;34.6V(BR) max at IR 40mA;45.7V(CL) at Ipp 13.1A
96♦	GT6119	6		A94ae	IRM 1.0uA at 27.4VRM;39.6V(BR) max at IR 30mA;52V(CL) at Ipp 11.5A
97	GT6119A	6		A94ae	IRM 1.0uA at 27.4VRM;37.8V(BR) max at IR 30mA;49.9V(CL) at Ipp 12A
98	GT6120	6		A94ae	IRM 1.0uA at 29.7VRM;42.9V(BR) max at IR 30mA;56.4V(CL) at Ipp 10.6A
99	GT6120A	6		A94ae	IRM 1.0uA at 29.7VRM;40.9V(BR) max at IR 30mA;53.9V(CL) at Ipp 11.1A
100	GT6121	6		A94ae	IRM 1.0uA at 32.7VRM;47.3V(BR) max at IR 30mA;61.9V(CL) at Ipp 9.7A
101	GT6121A	6		A94ae	IRM 1.0uA at 32.7VRM;45.1V(BR) max at IR 30mA;59.3V(CL) at Ipp 10.1A
102	GT6122	6		A94ae	IRM 1.0uA at 35.8VRM;51.7V(BR) max at IR 25mA;67.8V(CL) at Ipp 8.8A
103	GT6122A	6		A94ae	IRM 1.0uA at 35.8VRM;49.3V(BR) max at IR 25mA;64.8V(CL) at Ipp 9.3A
104	GT6123	6		A94ae	IRM 1.0uA at 38.8VRM;56.1V(BR) max at IR 25mA;73.5V(CL) at Ipp 8.2A
105	GT6123A	6		A94ae	IRM 1.0uA at 38.8VRM;53.5V(BR) max at IR 25mA;70.1V(CL) at Ipp 8.6A
106	GT6124	6		A94ae	IRM 1.0uA at 42.6VRM;61.6V(BR) max at IR 20mA;80.5V(CL) at Ipp 7.5A
107	GT6124A	6		A94ae	IRM 1.0uA at 42.6VRM;58.8V(BR) max at IR 20mA;77V(CL) at Ipp 7.8A
108	GT6125	6		A94ae	IRM 1.0uA at 47.1VRM;68.2V(BR) max at IR 20mA;89V(CL) at Ipp 6.7A
109	GT6125A	6		A94ae	IRM 1.0uA at 47.1VRM;65.1V(BR) max at IR 20mA;85V(CL) at Ipp 7.1A
110	GT6126	6		A94ae	IRM 1.0uA at 51.7VRM;74.8V(BR) max at IR 20mA;98V(CL) at Ipp 6.1A

7. TRANSIENT SUPPRESSOR DIODES - Bipolar & Unipolar Types (Cont'd)

IN ORDER OF (1) TYPE (2) MAT AND (3) TYPE NO.

LINE No.	3 TYPE NUMBER	1 TYPE	2 MAT.	DWG. NO.	DESCRIPTION
1	GT6126A	6		A94ae	IRM 1.0uA at 51.7VRM;71.4V(BR) max at IR 20mA;92V(CL) at Ipp 6.5A
2	GT6127	6		A94ae	IRM 1.0uA at 56.0VRM;82.5V(BR) max at IR 20mA;108V(CL) at Ipp 5.6A
3	GT6127A	6		A94ae	IRM 1.0uA at 56.0VRM;78.7V(BR) max at IR 20mA;103V(CL) at Ipp 5.8A
4	GT6128	6		A94ae	IRM 1.0uA at 62.2VRM;90.2V(BR) max at IR 15mA;118V(CL) at Ipp 5.1A
5	GT6128A	6		A94ae	IRM 1.0uA at 62.2VRM;86.1V(BR) max at IR 15mA;113V(CL) at Ipp 5.3A
6	GT6129	6		A94ae	IRM 1.0uA at 69.2VRM;100.1V(BR) max at IR 15mA;131V(CL) at Ipp 4.6A
7	GT6129A	6		A94ae	IRM 1.0uA at 69.2VRM;95.5V(BR) max at IR 15mA;125V(CL) at Ipp 4.8A
8	GT6130	6		A94ae	IRM 1.0uA at 76.0VRM;110.0V(BR) max at IR 12mA;144V(CL) at Ipp 4.2A
9	GT6130A	6		A94ae	IRM 1.0uA at 76.0VRM;105.0V(BR) max at IR 12mA;137V(CL) at Ipp 4.4A
10	GT6131	6		A94ae	IRM 1.0uA at 83.6VRM;121.0V(BR) max at IR 12mA;158V(CL) at Ipp 3.8A
11	GT6131A	6		A94ae	IRM 1.0uA at 83.6VRM;115.5V(BR) max at IR 12mA;152V(CL) at Ipp 3.9A
12	GT6132	6		A94ae	IRM 1.0uA at 91.2VRM;132.0V(BR) max at IR 10mA;173V(CL) at Ipp 3.5A
13	GT6132A	6		A94ae	IRM 1.0uA at 91.2VRM;126.0V(BR) max at IR 10mA;165V(CL) at Ipp 3.6A
14	GT6133	6		A94ae	IRM 1.0uA at 98.8VRM;143.0V(BR) max at IR 10mA;187V(CL) at Ipp 3.2A
15	GT6133A	6		A94ae	IRM 1.0uA at 98.8VRM;136.5V(BR) max at IR 10mA;179V(CL) at Ipp 3.4A
16	GT6134	6		A94ae	IRM 1.0uA at 114.0VRM;165.0V(BR) max at IR 8mA;215V(CL) at Ipp 2.8A
17	GT6134A	6		A94ae	IRM 1.0uA at 114.0VRM;157.5V(BR) max at IR 8mA;207V(CL) at Ipp 2.9A
18	GT6135	6		A94ae	IRM 1.0uA at 121.6VRM;176.0V(BR) max at IR 8mA;230V(CL) at Ipp 2.6A
19	GT6135A	6		A94ae	IRM 1.0uA at 121.6VRM;168.0V(BR) max at IR 8mA;219V(CL) at Ipp 2.7A
20	GT6136	6		A94ae	IRM 1.0uA at 136.8VRM;198V(BR) max at IR 5mA;258V(CL) at Ipp 2.3A
21	GT6136A	6		A94ae	IRM 1.0uA at 136.8VRM;189V(BR) max at IR 5mA;246V(CL) at Ipp 2.4A
22	GT6137	6		A94ae	IRM 1.0uA at 152.0VRM;220V(BR) max at IR 5mA;287V(CL) at Ipp 2.1A
23	GT6137A	6		A94ae	IRM 1.0uA at 152.0VRM;210V(BR) max at IR 5mA;274V(CL) at Ipp 2.2A
24	GT6138	6		A94af	IRM 500uA at 5.2VRM;7.48V(BR)max at IR 175mA;11.0V(CL) at Ipp 136.4A
25	GT6138A	6		A94af	IRM 500uA at 5.2VRM;7.14V(BR)max at IR 175mA;10.5V(CL) at Ipp 142.8A
26	GT6139	6		A94af	IRM 300uA at 5.7VRM;8.25V(BR)max at IR 175mA;11.8V(CL) at Ipp 127.1A
27	GT6139A	6		A94af	IRM 300uA at 5.7VRM;7.87V(BR)max at IR 175mA;11.2V(CL) at Ipp 133.9A
28	GT6140	6		A94af	IRM 100uA at 6.2VRM;9.02V(BR)max at IR 150mA;12.7V(CL) at Ipp 118.1A
29	GT6140A	6		A94af	IRM 100uA at 6.2VRM;8.61V(BR)max at IR 150mA;12.1V(CL) at Ipp 124.0A
30	GT6141	6		A94af	IRM 100uA at 6.9VRM;10.01V(BR)max at IR 150mA;14.0V(CL) at Ipp 107.1A
31	GT6141A	6		A94af	IRM 100uA at 6.9VRM;9.55V(BR)max at IR 150mA;13.4V(CL) at Ipp 111.9A
32	GT6142	6		A94af	IRM 100uA at 7.6VRM;11.00V(BR)max at IR 125mA;15.2V(CL) at Ipp 98.7A
33	GT6142A	6		A94af	IRM 100uA at 7.6VRM;10.5V(BR) max at IR 125mA;14.5V(CL) at Ipp 103.4A
34♦	GT6143	6		A94af	IRM 20uA at 8.4 VRM; 12.10 V(BR) max at IR 125mA;16.3 V(CL) at Ipp 92.0A
35♦	GT6143A	6		A94af	IRM 20uA at 8.4 VRM; 11.55 V(BR) max at IR 125mA;15.6 V(CL) at Ipp 96.2A
36♦	GT6144	6		A94af	IRM 20uA at 9.1 VRM; 13.20 V(BR) max at IR 100mA;17.7 V(CL) at Ipp 84.7A
37♦	GT6144A	6		A94af	IRM 20uA at 9.1 VRM; 12.60 V(BR) max at IR 100mA;16.9 V(CL) at Ipp 88.8A
38♦	GT6145	6		A94af	IRM 20uA at 9.9 VRM; 14.30 V(BR) max at IR 100mA;19.0 V(CL) at Ipp 78.9A
39♦	GT6145A	6		A94af	IRM 20uA at 9.9 VRM; 13.65 V(BR) max at IR 100mA;18.2 V(CL) at Ipp 82.4A
40♦	GT6146	6		A94af	IRM 20uA at 11.4 VRM: 16.50 V(BR) max at IR 75mA; 21.9 V (CL) at Ipp 68.5A
41♦	GT6146A	6		A94af	IRM 20uA at 11.4 VRM: 15.75 V(BR) max at IR 75mA; 21.0 V (CL) at Ipp 71.4A
42♦	GT6147	6		A94af	IRM 20uA at 12.2 VRM: 17.60 V(BR) max at IR 75mA; 23.4 V (CL) at Ipp 64.1A
43♦	GT6147A	6		A94af	IRM 20uA at 12.2 VRM: 16.80 V(BR) max at IR 75mA; 22.3 V (CL) at Ipp 67.3A
44♦	GT6148	6		A94af	IRM 10uA at 13.7 VRM: 19.80 V(BR) max at IR 65mA; 26.3 V (CL) at Ipp 57.0A
45	GT6148A	6		A94af	IRM 10uA at 13.7VRM;18.9V(BR) max at IR 65mA;25.1V(CL) at Ipp 59.8A
46	GT6149	6		A94af	IRM 5.0uA at 15.2VRM;22.0V(BR) max at IR 65mA;29.0V(CL) at Ipp 51.7A
47	GT6149A	6		A94af	IRM 5.0uA at 15.2VRM;21.0V(BR) max at IR 65mA;27.7V(CL) at Ipp 54.2A
48	GT6150	6		A94af	IRM 5.0uA at 16.7VRM;24.2V(BR) max at IR 50mA;31.9V(CL) at Ipp 47.0A
49	GT6150A	6		A94af	IRM 5.0uA at 16.7VRM;23.1V(BR) max at IR 50mA;30.5V(CL) at Ipp 49.2A
50	GT6151	6		A94af	IRM 5.0uA at 18.2VRM;26.4V(BR) max at IR 50mA;34.8V(CL) at Ipp 43.1A
51	GT6151A	6		A94af	IRM 5.0uA at 18.2VRM;25.2V(BR) max at IR 50mA;33.3V(CL) at Ipp 45.0A
52	GT6152	6		A94af	IRM 5.0uA at 20.6VRM;29.7V(BR) max at IR 50mA;39.2V(CL) at Ipp 38.3A
53	GT6152A	6		A94af	IRM 5.0uA at 20.6VRM;28.3V(BR) max at IR 50mA;37.4V(CL) at Ipp 40.1A
54	GT6153	6		A94af	IRM 5.0uA at 22.8VRM;33.0V(BR) max at IR 40mA;43.6V(CL) at Ipp 34.4A
55	GT6153A	6		A94af	IRM 5.0uA at 22.8VRM;31.5V(BR) max at IR 40mA;41.6V(CL) at Ipp 36.0A
56	GT6154	6		A94af	IRM 5.0uA at 25.1VRM;36.3V(BR) max at IR 40mA;47.9V(CL) at Ipp 31.3A
57	GT6154A	6		A94af	IRM 5.0uA at 25.1VRM;34.6V(BR) max at IR 40mA;45.7V(CL) at Ipp 32.8A
58	GT6155	6		A94af	IRM 5.0uA at 27.4VRM;39.6V(BR) max at IR 30mA;52.3V(CL) at Ipp 28.7A
59	GT6155A	6		A94af	IRM 5.0uA at 27.4VRM;37.8V(BR) max at IR 30mA;49.9V(CL) at Ipp 30.1A
60	GT6156	6		A94af	IRM 5.0uA at 29.7VRM;42.9V(BR) max at IR 30mA;56.2V(CL) at Ipp 26.7A
61	GT6156A	6		A94af	IRM 5.0uA at 29.7VRM;40.9V(BR) max at IR 30mA;53.6V(CL) at Ipp 28.0A
62	GT6157	6		A94af	IRM 5.0uA at 32.7VRM;47.3V(BR) max at IR 30mA;62.0V(CL) at Ipp 24.2A
63	GT6157A	6		A94af	IRM 5.0uA at 32.7VRM;45.1V(BR) max at IR 30mA;59.1V(CL) at Ipp 25.4A
64	GT6158	6		A94af	IRM 5.0uA at 35.8VRM;51.7V(BR) max at IR 25mA;61.7V(CL) at Ipp 22.2A
65	GT6158A	6		A94af	IRM 5.0uA at 35.8VRM;49.3V(BR) max at IR 25mA;64.6V(CL) at Ipp 23.2A
66	GT6159	6		A94af	IRM 5.0uA at 38.8VRM;56.1V(BR) max at IR 25mA;73.5V(CL) at Ipp 20.4A
67	GT6159A	6		A94af	IRM 5.0uA at 38.8VRM;53.5V(BR) max at IR 25mA;70.1V(CL) at Ipp 21.4A
68♦	GT6160	6		A94af	IRM 5.0uA at 42.6VRM;61.6V(BR) max at IR 20mA;80.7V(CL) at Ipp 18.6A
69	GT6160A	6		A94af	IRM 5.0uA at 42.6VRM;58.8V(BR) max at IR 20mA;77.0V(CL) at Ipp 19.5A
70	GT6161	6		A94af	IRM 5.0uA at 47.1VRM;68.2V(BR) max at IR 20mA;89.3V(CL) at Ipp 16.8A
71	GT6161A	6		A94af	IRM 5.0uA at 47.1VRM;65.1V(BR) max at IR 20mA;85.3V(CL) at Ipp 17.6A
72	GT6162	6		A94af	IRM 5.0uA at 51.7VRM;74.8V(BR) max at IR 20mA;98.0V(CL) at Ipp 15.3A
73	GT6162A	6		A94af	IRM 5.0uA at 51.7VRM;71.4V(BR) max at IR 20mA;97.1V(CL) at Ipp 15.4A
74	GT6163	6		A94af	IRM 5.0uA at 56.0VRM;82.5V(BR) max at IR 20mA;108.1V(CL) at Ipp 13.9A
75	GT6163A	6		A94af	IRM 5.0uA at 56.0VRM;78.7V(BR) max at IR 20mA;103.1V(CL) at Ipp 14.5A
76	GT6164	6		A94af	IRM 5.0uA at 62.2VRM;90.2V(BR) max at IR 15mA;118.2V(CL) at Ipp 12.7A
77	GT6164A	6		A94af	IRM 5.0uA at 62.2VRM;86.1V(BR) max at IR 15mA;112.8V(CL) at Ipp 13.3A
78	GT6165	6		A94af	IRM 5.0uA at 69.2VRM;100.1V(BR) max at IR 15mA;131.1V(CL) at Ipp 11.4A
79	GT6165A	6		A94af	IRM 5.0uA at 69.2VRM;95.5V(BR) max at IR 15mA;125.1V(CL) at Ipp 12.0A
80♦	GT6166	6		A94af	IRM 5.0uA at 76.0VRM;110.0V(BR) max at IR 12mA;144.1V(CL) at Ipp 10.4A
81	GT6166A	6		A94af	IRM 5.0uA at 76.0VRM;105.0V(BR) max at IR 12mA;137.6V(CL) at Ipp 10.9A
82	GT6167	6		A94af	IRM 5.0uA at 83.6VRM;121.0V(BR) max at IR 12mA;158.5V(CL) at Ipp 9.5A
83	GT6167A	6		A94af	IRM 5.0uA at 83.6VRM;115.5V(BR) max at IR 12mA;151.3V(CL) at Ipp 9.9A
84	GT6168	6		A94af	IRM 5.0uA at 91.2VRM;132.0V(BR) max at IR 10mA;172.9V(CL) at Ipp 8.7A
85	GT6168A	6		A94af	IRM 5.0uA at 91.2VRM;136.0V(BR) max at IR 10mA;165.1V(CL) at Ipp 9.1A
86	GT6169	6		A94af	IRM 5.0uA at 98.8VRM;143.0V(BR) max at IR 10mA;187.3V(CL) at Ipp 8.0A
87	GT6169A	6		A94af	IRM 5.0uA at 98.8VRM;136.5V(BR) max at IR 10mA;178.8V(CL) at Ipp 8.4A
88	GT6170	6		A94af	IRM 5.0uA at 114.0VRM;165.0V(BR) max at IR 8mA;216.2V(CL) at Ipp 6.9A
89	GT6170A	6		A94af	IRM 5.0uA at 114.0VRM;157.5V(BR) max at IR 8mA;206.3V(CL) at Ipp 7.3A
90	GT6171	6		A94af	IRM 5.0uA at 121.6VRM;176.0V(BR) max at IR 8mA;228.3V(CL) at Ipp 6.6A
91	GT6171A	6		A94af	IRM 5.0uA at 121.6VRM;168.0V(BR) max at IR 8mA;218.4V(CL) at Ipp 6.9A
92	GT6172	6		A94af	IRM 5.0uA at 136.8VRM;198V(BR) max at IR 5mA;257.4V(CL) at Ipp 5.8A
93	GT6172A	6		A94af	IRM 5.0uA at 136.8VRM;189V(BR) max at IR 5.0mA;245.7V(CL) at Ipp 6.1A
94	GT6173	6		A94af	IRM 5.0uA at 152.0VRM;220V(BR) max at IR 5.0mA;286.0V(CL) at Ipp 5.2A
95	GT6173A	6		A94af	IRM 5.0uA at 152.0VRM;210V(BR) max at IR 5.0mA;273.0V(CL) at Ipp 5.5A
96	ICTE5S	6		A398k	IRM 300uA at 5VRM;5.5V(BR) max at IR 1.0mA;6.6V(CL) at Ipp 1.0A
97	ICTE5SC	6		A398k	IRM 300uA at 5VRM;5.5V(BR) max at IR 1.0mA;6.6V(CL) at Ipp 1.0A;Bidirectional
98	KZ6.8	6		DO27§	Zener Klipper;Breakdown Volt Range 6.12-7.48V;IT 175mA
99	KZ6.8A	6		DO27§	Zener Klipper;Breakdown Volt Range 6.46-7.14V;IT 175mA
100	KZ7.5	6		DO27§	Zener Klipper;Breakdown Volt Range 6.75-8.25V;IT 175mA
101	KZ7.5A	6		DO27§	Zener Klipper;Breakdown Volt Range 7.13-7.85V;IT 175mA
102	KZ8.2	6		DO27§	Zener Klipper;Breakdown Volt Range 7.38-9.02V;IT 150mA
103	KZ8.2A	6		DO27§	Zener Klipper;Breakdown Volt Range 7.79-8.61V;IT 150mA
104	KZ9.1	6		DO27§	Zener Klipper;Breakdown Volt Range 8.19-10V;IT 150mA
105	KZ9.1A	6		DO27§	Zener Klipper;Breakdown Volt Range 8.65-9.55V;IT 150mA
106	KZ10	6		DO27§	Zener Klipper;Breakdown Volt Range 9.0-11V;IT 125mA
107	KZ10A	6		DO27§	Zener Klipper;Breakdown Volt Range 9.5-10.5V;IT 125mA
108	KZ11	6		DO27§	Zener Klipper;Breakdown Volt Range 9.9-12.1V;IT 125mA
109	KZ11A	6		DO27§	Zener Klipper;Breakdown Volt Range 10.4-11.5V;IT 125mA
110	KZ12	6		DO27§	Zener Klipper;Breakdown Volt Range 10.8-13.2V;IT 100mA

SYMBOLS AND CODES EXPLAINED IN INTERPRETER

7. TRANSIENT SUPPRESSOR DIODES - Bipolar & Unipolar Types (Cont'd)

IN ORDER OF (1) TYPE (2) MAT AND (3) TYPE NO.

LINE No.	3 TYPE NUMBER	1 TYPE	2 MAT.	DWG. NO.	DESCRIPTION
1	KZ12A	6		DO27§	Zener Klipper;Breakdown Volt Range 11.4-12.6V;IT 100mA
2	KZ13	6		DO27§	Zener Klipper;Breakdown Volt Range 11.7-14.3V;IT 100mA
3	KZ13A	6		DO27§	Zener Klipper;Breakdown Volt Range 12.3-13.6V;IT 100mA
4	KZ15	6		DO27§	Zener Klipper;Breakdown Volt Range 13.5-16.5V;IT 75mA
5	KZ15A	6		DO27§	Zener Klipper;Breakdown Volt Range 14.2-15.7V;IT 75mA
6	KZ16	6		DO27§	Zener Klipper;Breakdown Volt Range 14.4-17.6V;IT 75mA
7	KZ16A	6		DO27§	Zener Klipper;Breakdown Volt Range 15.2-16.8V;IT 75mA
8	KZ18	6		DO27§	Zener Klipper;Breakdown Volt Range 16.2-19.8V;IT 65mA
9	KZ18A	6		DO27§	Zener Klipper;Breakdown Volt Range 17.1-18.9V;IT 65mA
10	KZ20	6		DO27§	Zener Klipper;Breakdown Volt Range 18-22V;IT 65mA
11	KZ20A	6		DO27§	Zener Klipper;Breakdown Volt Range 19-21V;IT 65mA
12	KZ22	6		DO27§	Zener Klipper;Breakdown Volt Range 19.8-24.2V;IT 50mA
13	KZ22A	6		DO27§	Zener Klipper; Breakdown Volt Range 20.9-23.1V; IT 50mA
14	KZ24	6		DO27§	Zener Klipper;Breakdown Volt Range 21.6-26.4V;IT 50mA
15	KZ24A	6		DO27§	Zener Klipper;Breakdown Volt Range 22.8-25.2V;IT 50mA
16	KZ27	6		DO27§	Zener Klipper;Breakdown Volt Range 24.3-29.7V;IT 50mA
17	KZ27A	6		DO27§	Zener Klipper;Breakdown Volt Range 25.7-28.3V;IT 50mA
18	KZ30	6		DO27§	Zener Klipper;Breakdown Volt Range 27-33V;IT 40mA
19	KZ30A	6		DO27§	Zener Klipper;Breakdown Volt Range 28.5-31.5V;IT 40mA
20	KZ33	6		DO27§	Zener Klipper;Breakdown Volt Range 29.7-26.3V;IT 40mA
21	KZ33A	6		DO27§	Zener Klipper;Breakdown Volt Range 31.4-34.6V;IT 40mA
22	KZ36	6		DO27§	Zener Klipper;Breakdown Volt Range 32.4-39.6V;IT 30mA
23	KZ36A	6		DO27§	Zener Klipper;Breakdown Volt Range 34.2-37.8V;IT 30mA
24	KZ39	6		DO27§	Zener Klipper;Breakdown Volt Range 35.1-42.9V;IT 30mA
25	KZ39A	6		DO27§	Zener Klipper;Breakdown Volt Range 37.1-40.9V;IT 30mA
26	KZ43	6		DO27§	Zener Klipper;Breakdown Volt Range 38.7-47.3V;IT 30mA
27	KZ43A#B	6		DO27§	Zener Klipper;Breakdown Volt Range 40.9-45.1V;IT 30mA
28	KZ47	6		DO27§	Zener Klipper;Breakdown Volt Range 42.3-51.7V;IT 25mA
29	KZ47A#B	6		DO27§	Zener Klipper;Breakdown Volt Range 44.7-49.3V;IT 25mA
30	KZ51	6		DO27§	Zener Klipper;Breakdown Volt Range 45.9-56.1V;IT 25mA
31	KZ51A#B	6		DO27§	Zener Klipper;Breakdown Volt Range 48.5-53.5V;IT 25mA
32	KZ56	6		DO27§	Zener Klipper;Breakdown Volt Range 50.4-61.6V;IT 20mA
33	KZ56A#B	6		DO27§	Zener Klipper;Breakdown Volt Range 53.2-58.8V;IT 20mA
34	KZ62	6		DO27§	Zener Klipper;Breakdown Volt Range 55.8-68.2V;IT 20mA
35	KZ62A#B	6		DO27§	Zener Klipper;Breakdown Volt Range 58.9-65.1V;IT 20mA
36	KZ68	6		DO27§	Zener Klipper; Breakdown Volt Range 61.2-74.8V;IT 20mA
37	KZ68A#B	6		DO27§	Zener Klipper; Breakdown Volt Range 64.6-71.4V;IT 20mA
38	KZ75	6		DO27§	Ziner Klipper;Breakdown Volt Range 67.5-82.5;IT20mA
39	KZ75A#B	6		DO27§	Ziner Klipper;Breakdown Volt Range 71.3-78.7;IT20mA
40	KZ82	6		DO27§	Ziner Klipper;Breakdown Volt Range 73.8-90.2V;15mA
41	KZ82A#B	6		DO27§	Ziner Klipper;Breakdown Volt Range 77.9-86.1;IT15mA
42	KZ91	6		DO27§	Ziner Klipper;Breakdown Volt Range 81.9-100;IT15mA
43	KZ91A#B	6		DO27§	Ziner Klipper;Breakdown Volt Range 86.5-95.5;IT15mA
44	KZ100	6		DO27§	Zener Klipper;Breakdown Volt Range 90-110V;IT12mA
45	KZ100A#B	6		DO27§	Zener Klipper;Breakdown Volt Range 95-105V;IT12mA
46	KZ110	6		DO27§	Zener Klipper;Breakdown Volt Range 99-121V;IT12mA
47	KZ110A#B	6		DO27§	Zener Klipper;Breakdown Volt Range 104-115V;IT12mA
48	KZ120	6		DO27§	Zener Klipper;Breakdown Volt Range 108-132V;IT10mA
49	KZ120A	6		DO27§	Zener Klipper;Breakdown Volt Range 114-126V;IT10mA
50	KZ130	6		DO27§	Zener Klipper;Breakdown Volt Range 117-143V;IT10mA
51	KZ130A	6		DO27§	Zener Klipper;Breakdown Volt Range 123-136V;IT10mA
52	KZ150	6		DO27§	Zener Klipper; Breakdown Volt Range 135-165V;IT 8.0mA
53	KZ150A	6		DO27§	Zener Klipper;Breakdown Volt Range 142-157V;IT8.0mA
54	KZ160	6		DO27§	Zener Klipper;Breakdown Volt Range 144-176V;IT8.0mA
55	KZ160A	6		DO27§	Zener Klipper;Breakdown Volt Range 152-168V;IT8.0mA
56	KZ180	6		DO27§	Zener Klipper;Breakdown Volt RANGE 162-198V;IT5.0mA
57	KZ180A	6		DO27§	Zener Klipper;Breakdown Volt Range 171-189V;IT5.0mA
58	KZ200	6		DO27§	Zener Klipper;Breakdown Volt Range 180-220V;IT5.0mA
59	KZ200A	6		DO27§	Zener Klipper;Breakdown Volt Range 190-210V;IT5.0mA
60	L8B6v8C	6		A298ar	VBR 6.8V nom;Ir 1.0mA at Vr 5.80V;Temp Coef .057%°C
61	L8B7v5C	6		A298ar	VBR 7.5V nom;Ir 500uA at Vr 6.40V;Temp Coef .065%°C
62	L8B8v2C	6		A298ar	VBR 8.2V nom;Ir 200uA at Vr 7.02V;Temp Coef .065%°C
63	L8B9v1C	6		A298ar	VBR 9.1V nom;Ir 50uA at Vr 7.78V;Temp Coef .068%°C
64	L8B10C	6		A298ar	VBR 10V nom;Ir 10uA at Vr 8.55V;Temp Coef .073%°C
65	L8B11C	6		A298ar	VBR 11V nom;Ir 5.0uA at Vr 9.40V;Temp Coef .075%°C
66	L8B12C	6		A298ar	VBR 12V nom;Ir 5.0uA at Vr 10.2V;Temp Coef .078%°C
67	L8B13C	6		A298ar	VBR 13V nom;Ir 5.0uA at Vr 11.1V;Temp Coef .081%°C
68	L8B15C	6		A298ar	VBR 15V nom;Ir 5.0uA at Vr 12.8V;Temp Coef .084%°C
69	L8B18C	6		A298ar	BVR 18V nom;Ir 5.0uA at Vr 15.3V;Temp Coef .088%°C
70	L8B20C	6		A298ar	VBR 20V nom;Ir 5.0uA at Vr 17.1V;Temp Coef .090%°C
71	L8B22C	6		A298ar	VBR 22V nom;Ir 5.0uA at Vr 18.8V;Temp Coef .092%°C
72	L8B24C	6		A298ar	VBR 24V nom;Ir 5.0uA at Vr 20.5V;Temp Coef .094%°C
73	L8B27C	6		A298ar	VBR 27V nom;Ir 5.0uA at Vr 23.1V;Temp Coef .096%°C
74	L8B30C	6		A298ar	VBR 30V nom;Ir 5.0uA at Vr 25.6V;Temp Coef .097%°CC
75	L8B33C	6		A298ar	VBR 33V nom;Ir 5.0uA at Vr 28.2V;Temp Coef .098%°C
76	L8B36C	6		A298ar	VBR 36V nom;Ir 5.0uA at Vr 30.8V;Temp Coef .099%°C
77	L8B39C	6		A298ar	VBR 39V nom;Ir 5.0uA at Vr 33.3V;Temp Coef .100%°C
78	L8B43C	6		A298ar	VBR 43V nom;Ir 5.0uA at Vr 36.8V;Temp Coef .101%°C
79	L8B47C	6		A298ar	VBR 47V nom;Ir 5.0uA at Vr 40.2V;Temp Coef .101%°C
80	L8B51C	6		A298ar	VBR 51V nom;Ir 5.0uA at Vr 43.6V;Temp Coef .102%°C
81	L8B56C	6		A298ar	VBR 56V nom;Ir 5.0uA at Vr 47.8V;Temp Coef .103%°C
82	L8B62C	6		A298ar	VBR 62V nom;Ir 5.0uA at Vr 53V;Temp Coef .104% °C
83	L8B68C	6		A298ar	VBR 68V nom;Ir 5.0uA at Vr 58.1V;Temp Coef .104%°C
84	L8B75C	6		A298ar	VBR 75 V nom;Ir 5.0uA atVr 64.0V;Temp Coef .105%°C
85	L8B82C	6		A298ar	VBR 82V nom;Ir 5.0uA at Vr 70.1V;Temp Coef .105%°C
86	L8B91C	6		A298ar	VBR 91V nom;Ir 5.0uA at Vr 77.8V;Temp Coef .106%°C
87	L8B100C	6		A298ar	VBR 100V nom;Ir 5.0uA at Vr 85.5V;Temp Coef .106%°C
88	L8B110C	6		A298ar	VBR 110V nom Ir 5.0uA at Vr 94V;Temp Coef .107%°C
89	L8B120C	6		A298ar	VBR 120V nom;Ir 5.0uA at Vr 102V;Temp Coef .107%°C
90	L8B130C	6		A298ar	VBR 130V nom;Ir 5.0uA at Vr 111V;Temp Coef .107%°C
91	L8B150C	6		A298ar	VBR 150V nom;Ir 5.0uA at Vr 128V;Temp Coef .108%°C
92	L8B160C	6		A298ar	VBR 160V nom;Ir 5.0uA at Vr 136V;Temp Coef .108%°C
93	L8B170C	6		A298ar	VBR 170V nom;Ir 5.0uA at Vr 145V;Temp Coef .108%°C
94	L8B180C	6		A298ar	VBR 180V nom;Ir 5.0uA at Vr 154V;Temp Coef .108%°C
95	L8B200C	6		A298ar	VBR 200V nom;Ir 5.0uA at Vr 171V;Temp Coef .108%°C
96	L8B220C	6		A298ar	VBR 220V nom;Ir 5.0uA at Vr 185V;Temp Coef .108%°C
97	L8B250C	6		A298ar	VBR 250V nom;Ir 5.0uA at Vr 214V;Temp Coef .110%°C
98	L8B300C	6		A298ar	VBR 300V nom;Ir 5.0uA at Vr 256V;Temp Coef .110%°C
99	L8B350C	6		A298ar	VBR 350V nom;Ir 5.0uA at Vr 300V;Temp Coef .110%°C
100	L8B400C	6		A298ar	VBR 400V nom;Ir 5.0uA at Vr 342V;Temp Coef .110%°C
101	L8C6v8C	6		A298ar	VBR 6.8V nom;Ir 1.0mA at Vr 5.50V;Temp Coef .057%°C
102	L8C7v5C	6		A298ar	VBR 7.5V nom;Ir 500uA at Vr 6.05V;Temp Coef .061%°C
103	L8C8v2C	6		A298ar	VBR 8.2V nom;Ir 200uA at Vr 6.63V;Temp Coef .065%°C
104	L8C9v1C	6		A298ar	VBR 9.1V nom;Ir 50uA at Vr 7.37V;Temp Coef .068%°C
105	L8C10C	6		A298ar	VBR 10V nom;Ir 10uA at Vr 8.10V;Temp Coef .073%°C
106	L8C11C	6		A298ar	VBR 11V nom;Ir 5.0uA at Vr 8.92V;Temp Coef .075%°C
107	L8C12C	6		A298ar	VBR 12V nom;Ir 5.0uA at Vr 9.72V;Temp Coef .078%°C
108	L8C13C	6		A298ar	VBR 13V nom;Ir 5.0uA at Vr 10.5V;Temp Coef .081%°C
109	L8C15C	6		A298ar	VBR 15V nom;Ir 5.0uA at Vr 12.1V;Temp Coef .084%°C
110	L8C16C	6		A298ar	VBR 16V nom;Ir 5.0uA at Vr 12.9V;Temp Coef .086%°C

SYMBOLS AND CODES EXPLAINED IN INTERPRETER

7. TRANSIENT SUPPRESSOR DIODES - Bipolar & Unipolar Types (Cont'd)

IN ORDER OF (1) TYPE (2) MAT AND (3) TYPE NO.

LINE No.	3 TYPE NUMBER	1 TYPE	2 MAT.	DWG. NO.	DESCRIPTION
1	L8C18C	6		A298ar	VBR 18V nom;Ir 5.0uA at Vr 14.5V;Temp Coef .088%°C
2	L8C20C	6		A298ar	VBR 20V nom;Ir 5.0uA at Vr 16.2V;Temp Coef .090%°C
3	L8C22C	6		A298ar	VBR 22V nom;Ir 5.0uA at Vr 17.8V;Temp Coef .092%°C
4	L8C24C	6		A298ar	VBR 24V nom;Ir 5.0uA at Vr 19.4V;Temp Coef .094%°C
5	L8C27C	6		A298ar	VBR 27V nom;Ir 5.0uA at Vr 21.8V;Temp Coef .096%°C
6	L8C30C	6		A298ar	VBR 30V nom;Ir 5.0uA at Vr 24.3V;Temp Coef .097%°C
7	L8C33C	6		A298ar	VBR 33V nom;Ir 5.0uA at Vr 26.8V;Temp Coef .098%°C
8	L8C36C	6		A298ar	VBR 36V nom;Ir 5.0uA at Vr 29.1V;Temp Coef .099%°C
9	L8C39C	6		A298ar	VBR 39V nom;Ir 5.0uA at Vr 31.6V;Temp Coef .100%°C
10	L8C43C	6		A298ar	VBR 43V nom;Ir 5.0uA at Vr 34.8V;Temp Coef .100%°C
11	L8C47C	6		A298ar	VBR 47V nom;Ir 5.0uA at Vr 38.1V;Temp Coef .101%°C
12	L8C51C	6		A298ar	VBR 51V nom;Ir 5.0uA at Vr 41.3V;Temp Coef .102%°C
13	L8C56C	6		A298ar	VBR 56V nom;Ir 5.0uA at Vr 45.4V;Temp Coef .103%°C
14	L8C62C	6		A298ar	VBR 62V nom;Ir 5.0uA at Vr 50.2V;Temp Coef .104%°C
15	L8C68C	6		A298ar	VBR 68V nom;Ir 5.0uA at Vr 55.1V;Temp Coef .104%°C
16	L8C75C	6		A298ar	VBR 75V nom;Ir 5.0uA at Vr 60.7V;Temp Coef .105%°C
17	L8C82C	6		A298ar	VBR 82V nom Ir 5.0uA at Vr 66.4V;Temp Coef .105%°C
18	L8C91C	6		A298ar	VBR 91V nom;Ir 5.0uA at Vr 73.7V;Temp Coef .106%°C
19	L8C100C	6		A298ar	VBR 100V nom;Ir 5.0uA at Vr 81V;Temp Coef .106%°C
20	L8C110C	6		A298ar	VBR 110V nom;Ir 5.0uA at Vr 89.2V;Temp Coef .107%°C
21	L8C120C	6		A298ar	VBR 120V nom;Ir 5.0uA at Vr 97.2V;Temp Coef .107%°C
22	L8C130C	6		A298ar	VBR 130 V nom;Ir 5.0uA at Vr 105V;Temp Coef .107%°C
23	L8C150C	6		A298ar	VBR 150V nom;Ir 5.0uA at Vr 121V;Temp Coef .108%°C
24	L8C160C	6		A298ar	VBR 160V nom;Ir 5.0uA at Vr 130V;Temp Coef .108%°Cv
25	L8C170C	6		A298ar	VBR 170V nom;Ir 5.0uA at Vr 138V;Temp Coef .108%°C
26	L8C180C	6		A298ar	VBR 180V nom;Ir 5.0uA at Vr 146V;Temp Coef .108%°C
27	L8C200C	6		A298ar	VBR 200V nom;Ir 5.0uA at Vr 162V;Temp Coef .108%°C
28	L8C220C	6		A298ar	VBR 220V nom;Ir 5.0uA at Vr 175V;Temp Coef .108%°C
29	L8C250C	6		A298ar	VBR 250V nom;Ir 5.0uA at Vr 202V;Temp Coef .110%°C
30	L8C300C	6		A298ar	VBR 300V nom;Ir 5.0iA at Vr 243V;Temp Coef .110%°C
31	L8C350C	6		A298ar	VBR 350V nom;Ir 5.0uA at Vr 284V;Temp Coef .110%°C
32	L8C400C	6		A298ar	VBR 400V nom;Ir 5.0uA at Vr 324V;Temp Coef .110%°C
33	MKT1V200	6		A1aas	V(BO) 260V max;VTM1.5V max;I(BO)200uA max,VDRM ±180V;di/dt 140A/uS;TJj 125°C
34	MKT1V200A	6		A1aas	V(BO) 235V max;VTM1.5V max;I(BO) 200uA max,VDRM ±180V;di/dt 140A/uS;Tj 125°C
35	MKT1V200B	6		A1aas	V(BO) 260V max;VTM 1.5V max;I(BO) 200uA max,VDRM ±180V;di/dt 140A/uS;TJ 25°C
36	MR2520L	6		A416a	VRRM 23V;IRSM 68A;TJ 175°C;V(BR) 32V (IR 100mAdc,Tc 25°C)
37	MR2525L	6		A416	IR 50uA at 20VR;40V(BR) max at IR 40A;IRSM 110A;VRWM 23V
38	P6KE6V8A	6		A1ee	IRM 1.0uA at 5.8VRM;7.14V(BR) max at IR 10mA;10.5V(CL) at Ipp 57A
39	P6KE6V8CA	6		A1ee	IRM 2.0uA at 5.8VRM;7.14V(BR) max at IR 10mA;10.5V(CL) at Ipp 57A;Bidirectional
40	P6KE6V8CP	6		A1ee	IRM 2.0uA at 5.8VRM;7.48V(BR) max at IR 10mA;10.5V(CL) at Ipp 57A;Bidirectional
41	P6KE6V8P	6		A1ee	IRM 1.0uA at 5.8VRM;7.48V(BR) max at IR 10mA;10.5V(CL) at Ipp 57A
42	P6KE7V5A	6		A1ee	IRM 500uA at 6.4VRM;7.88V(BR) max at IR 10mA;11.3V(CL) at Ipp 53A
43	P6KE7V5CA	6		A1ee	IRM 1.0mA at 6.4VRM;7.88V(BR) max at IR 10mA;11.3V(CL) at Ipp 53A;Bidirectional
44	P6KE7V5CP	6		A1ee	IRM 1.0mA at 6.4VRM;8.25V(BR) max at IR 10mA;11.3V(CL) at Ipp 53A;Bidirectional
45	P6KE7V5P	6		A1ee	IRM 500uA at 6.4VRM;8.25V(BR) max at IR 10mA;11.3V(CL) at Ipp 53A
46	P6KE8V2A	6		A1ee	IRM 200uA at 7.02VRM;8.61V(BR) max at IR 10mA;12.1V(CL) at Ipp 50A
47	P6KE8V2CA	6		A1ee	IRM 400uA at 7.02VRM;8.61V(BR) max at IR 10mA;12.1V(CL) at Ipp 50A;Bidirectional
48	P6KE8V2CP	6		A1ee	IRM 400uA at 7.02VRM;9.02V(BR) max at IR 10mA;12.1V(CL) at Ipp 50A;Bidirectional
49	P6KE8V2P	6		A1ee	IRM 200uA at 7.02VRM;9.02V(BR) max at IR 10mA;12.1V(CL) at Ipp 50A
50	P6KE9V1A	6		A1ee	IRM 50uA at 7.78VRM;9.55V(BR) max at IR 1.0mA;13.4V(CL) at Ipp 45A
51	P6KE9V1CA	6		A1ee	IRM 100uA at 7.78VRM;9.55V(BR) max at IR 1.0mA;13.4V(CL) at Ipp 45A;Bidirectional
52	P6KE9V1CP	6		A1ee	IRM 100uA at 7.78VRM;10V(BR) max at IR 1.0mA;13.4V(CL) at Ipp 45A;Bidirectional
53	P6KE9V1P	6		A1ee	IRM 50uA at 7.78VRM;10V(BR) max at IR 1.0mA;13.4V(CL) at Ipp 45A
54	P6KE10CP	6		A1ee	IRM 20uA at 8.55VRM;11V(BR) max at IR 1.0mA;14.5V(CL) at Ipp 41A;Bidirectional
55♦	P6KE10P	6		A1ee	IRM 10uA at 8.55VRM;11V(BR) max at IR 1.0mA;14.5V(CL) at Ipp 41A
56♦	P6KE11CP	6		A1ee	IRM 10uA at 9.4VRM;12.1V(BR) max at IR 1.0mA;15.6V(CL) at Ipp 38A;Bidirectional
57♦	P6KE11P	6		A1ee	IRM 5.0uA at 9.4VRM;12.1V(BR) max at IR 1.0mA;15.6V(CL) at Ipp 38A
58	P6KE12CA	6		A1ee	IRM 5.0uA at 10.2VRM;12.6V(BR) max at 1.0mA;16.7V(CL) at Ipp 36A;Bidirectional
59♦	P6KE12CP	6		A1ee	IRM 5.0uA at 10.2VRM;13.2V(BR) max at IR 1.0mA;16.7V(CL) at Ipp 36A;Bidirectional
60	P6KE12P	6		A1ee	IRM 5.0uA at 10.2VRM;13.2V(BR) max at IR 1.0mA;16.7V(CL) at Ipp 36A
61	P6KE13CA	6		A1ee	IRM 5.0uA at 11.1VRM;13.7V(BR) max at 1.0mA;18.2V(CL) at Ipp 33A;Bidirectional
62	P6KE13CP	6		A1ee	IRM 5.0uA at 11.1VRM;14.3V(BR) max at IR 1.0mA;18.2V(CL) at Ipp 33A;Bidirectional
63	P6KE13P	6		A1ee	IRM 5.0uA at 11.1VRM;14.3V(BR) max at IR 1.0mA;18.2V(CL) at Ipp 33A
64	P6KE15CA	6		A1ee	IRM 5.0uA at 12.8VRM;15.8V(BR) max at 1.0mA;21.2V(CL) at Ipp 28A;Bidirectional
65	P6KE15CP	6		A1ee	IRM 5.0uA at 12.8VRM;16.5V(BR) max at IR 1.0mA;21.2V(CL) at Ipp 28A;Bidirectional
66	P6KE15P	6		A1ee	IRM 5.0uA at 12.8VRM;16.5V(BR) max at IR 1.0mA;21.2V(CL) at Ipp 28A
67	P6KE16CA	6		A1ee	IRM 5.0uA at 13.6VRM;16.8V(BR) max at 1.0mA;22.5V(CL) at Ipp 27A;Bidirectional
68	P6KE16CP	6		A1ee	IRM 5.0uA at 13.6VRM;17.6V(BR) max at IR 1.0mA;22.5V(CL) at Ipp 27A;Bidirectional
69	P6KE16P	6		A1ee	IRM 5.0uA at 13.6VRM;17.6V(BR) max at IR 1.0mA;22.5V(CL) at Ipp 27A
70	P6KE18CA	6		A1ee	IRM 5.0uA at 15.3VRM;18.9V(BR) max at 1.0mA;25.2V(CL) at Ipp 24A;Bidirectional
71	P6KE18CP	6		A1ee	IRM 5.0uA at 15.3VRM;19.8V(BR) max at IR 1.0mA;25.2V(CL) at Ipp 24A;Bidirectional
72	P6KE18P	6		A1ee	IRM 5.0uA at 15.3VRM;19.8V(BR) max at IR 1.0mA;25.2V(CL) at Ipp 24A
73	P6KE20CA	6		A1ee	IRM 5.0uA at 17.1VRM;21.0V(BR) max at 1.0mA;27.7V(CL) at Ipp 22A;Bidirectional
74	P6KE20CP	6		A1ee	IRM 5.0uA at 17.1VRM;22.0V(BR) max at 1.0mA;27.7V(CL) at Ipp 22A;Bidirectional
75	P6KE20P	6		A1ee	IRM 5.0uA at 17.1VRM;22V(BR) max at IR 1.0mA;27.7V(CL) at Ipp 22A
76	P6KE22CA	6		A1ee	IRM 5.0uA at 18.8VRM;23.1V(BR) max at 1.0mA;30.6V(CL) at Ipp 20A;Bidirectional
77	P6KE22CP	6		A1ee	IRM 5.0uA at 18.8VRM;24.2V(BR) max at 1.0mA;30.6V(CL) at Ipp 20A;Bidirectional
78	P6KE22P	6		A1ee	IRM 5.0uA at 18.8VRM;24.2V(BR) max at 1.0mA;30.6V(CL) at Ipp 20A
79	P6KE24CA	6		A1ee	IRM 5.0uA at 20.5VRM;25.2V(BR) max at IR 1.0mA;33.2V(CL) at Ipp 18A;Bidirectional
80	P6KE24CP	6		A1ee	IRM 5.0uA at 20.5VRM;26.4V(BR) max at 1.0mA;33.2V(CL) at Ipp 18A;Bidirectional
81	P6KE24P	6		A1ee	IRM 5.0uA at 20.5VRM;26.4V(BR) max at 1.0mA;33.2V(CL) at Ipp 18A
82	P6KE27CA	6		A1ee	IRM 5.0uA at 23.1VRM;28.4V(BR) max at IR 1.0mA;37.5V(CL) at Ipp 16A;Bidirectional
83	P6KE27CP	6		A1ee	IRM 5.0uA at 23.1VRM;29.7V(BR) max at IR 1.0mA;37.5V(CL) at Ipp 16A;Bidirectional
84	P6KE27P	6		A1ee	IRM 5.0uA at 23.1VRM;29.7V(BR) max at IR 1.0mA;37.5V(CL) at Ipp 16A
85	P6KE30CA	6		A1ee	IRM 5.0uA at 25.6VRM;31.5V(BR) max at IR 1.0mA;41.4V(CL) at Ipp 14.5A;Bidirectional
86	P6KE30CP	6		A1ee	IRM 5.0uA at 25.6VRM;33.0V(BR) max at IR 1.0mA;41.4V(CL) at Ipp 14.5A;Bidirectional
87	P6KE30P	6		A1ee	IRM 5.0uA at 25.6VRM;33.0V(BR) max at IR 1.0mA;41.4V(CL) at Ipp 14.5A
88	P6KE33CA	6		A1ee	IRM 5.0uA at 28.2VRM;34.7V(BR) max at IR 1.0mA;45.7V(CL) at Ipp 13.1A;Bidirectional
89	P6KE33CP	6		A1ee	IRM 5.0uA at 28.2VRM;36.3V(BR) max at IR 1.0mA;45.7V(CL) at Ipp 13.1A;Bidirectional
90	P6KE33P	6		A1ee	IRM 5.0uA at 28.2VRM;36.3V(BR) max at IR 1.0mA;45.7V(CL) at Ipp 13.1A
91	P6KE36CA	6		A1ee	IRM 5.0uA at 30.8VRM;37.8V(BR) max at IR 1.0mA;49.9V(CL) at Ipp 12A;Bidirectional
92	P6KE36CP	6		A1ee	IRM 5.0uA at 30.8VRM;39.6V(BR) max at IR 1.0mA;49.9V(CL) at Ipp 12A;Bidirectional
93	P6KE36P	6		A1ee	IRM 5.0uA at 30.8VRM;39.6V(BR) max at IR 1.0mA;49.9V(CL) at Ipp 12A
94	P6KE39CA	6		A1ee	IRM 5.0uA at 33.3VRM;41.0V(BR) max at IR 1.0mA;53.9V(CL) at Ipp 11.1A;Bidirectional
95	P6KE39CP	6		A1ee	IRM 5.0uA at 33.3VRM;42.9V(BR) max at IR 1.0mA;53.9V(CL) at Ipp 11.1A;Bidirectional
96	P6KE39P	6		A1ee	IRM 5.0uA at 33.3VRM;42.9V(BR) max at IR 1.0mA;53.9V(CL) at Ipp 11.1A
97	P6KE43CA	6		A1ee	IRM 5.0uA at 36.8VRM;45.2V(BR) max at IR 1.0mA;59.3V(CL) at Ipp 10.1A;Bidirectional
98	P6KE43CP	6		A1ee	IRM 5.0uA at 36.8VRM;47.3V(BR) max at IR 1.0mA;59.3V(CL) at Ipp 10.1A;Bidirectional
99	P6KE43P	6		A1ee	IRM 5.0uA at 36.8VRM;47.3V(BR) max at IR 1.0mA;59.3V(CL) at Ipp 10.1A
100	P6KE47CA	6		A1ee	IRM 5.0uA at 40.2VRM;49.4V(BR) max at IR 1.0mA;64.8V(CL) at Ipp 9.3A;Bidirectional
101	P6KE47CP	6		A1ee	IRM 5.0uA at 40.2VRM;51.7V(BR) max at IR 1.0mA;64.8V(CL) at Ipp 9.3A;Bidirectional
102	P6KE47P	6		A1ee	IRM 5.0uA at 40.2VRM;51.7V(BR) max at IR 1.0mA;64.8V(CL) at Ipp 9.3A
103	P6KE51CA	6		A1ee	IRM 5.0uA at 43.6VRM;53.6V(BR) max at IR 1.0mA;70.1V(CL) at Ipp 8.6A;Bidirectional
104	P6KE51CP	6		A1ee	IRM 5.0uA at 43.6VRM;56.1V(BR) max at IR 1.0mA;70.1V(CL) at Ipp 8.6A;Bidirectional
105	P6KE51P	6		A1ee	IRM 5.0uA at 43.6VRM;56.1V(BR) max at IR 1.0mA;70.1V(CL) at Ipp 8.6A
106	P6KE56CA	6		A1ee	IRM 5.0uA at 47.8VRM;58.8V(BR) max at IR 1.0mA;77V(CL) at Ipp 7.8A;Bidirectional
107	P6KE56CP	6		A1ee	IRM 5.0uA at 47.8VRM;61.6V(BR) max at IR 1.0mA;77V(CL) at Ipp 7.8A;Bidirectional
108	P6KE56P	6		A1ee	IRM 5.0uA at 47.8VRM;61.6V(BR) max at IR 1.0mA;77V(CL) at Ipp 7.8A
109	P6KE62CA	6		A1ee	IRM 5.0uA at 53VRM;65.1V(BR) max at IR 1.0mA;85V(CL) at Ipp 7.1A;Bidirectional
110	P6KE62CP	6		A1ee	IRM 5.0uA at 53VRM;68.2V(BR) max at IR 1.0mA;85V(CL) at Ipp 7.1A;Bidirectional

SYMBOLS AND CODES EXPLAINED IN INTERPRETER

7. TRANSIENT SUPPRESSOR DIODES - Bipolar & Unipolar Types (Cont'd)

IN ORDER OF (1) TYPE (2) MAT AND (3) TYPE NO.

LINE No.	3 TYPE NUMBER	1 TYPE	2 MAT.	DWG. NO.	DESCRIPTION
1	P6KE62P	6		A1ee	IRM 5.0uA at 53VRM;68.2V(BR) max at IR 1.0mA;85V(CL) at Ipp 7.1A
2	P6KE68CA	6		A1ee	IRM 5.0uA at 58.1VRM;71.4V(BR) max at IR 1.0mA;92V(CL) at Ipp 6.5A;Bidirectional
3	P6KE68CP	6		A1ee	IRM 5.0uA at 58.1VRM;74.8V(BR) max at IR 1.0mA;92V(CL) at Ipp 6.5A;Bidirectional
4	P6KE68P	6		A1ee	IRM 5.0uA at 58.1VRM;74.8V(BR) max at IR 1.0mA;92V(CL) at Ipp 6.5A
5	P6KE75CA	6		A1ee	IRM 5.0uA at 64.1VRM;78.8V(BR) max at IR 1.0mA;103V(CL) at Ipp 5.8A;Bidirectional
6	P6KE75CP	6		A1ee	IRM 5.0uA at 64.1VRM;82.5V(BR) max at IR 1.0mA;103V(CL) at Ipp 5.8A;Bidirectional
7	P6KE75P	6		A1ee	IRM 5.0uA at 64.1VRM;82.5V(BR) max at IR 1.0mA;103V(CL) at Ipp 5.8A
8	P6KE82CA	6		A1ee	IRM 5.0uA at 70.1VRM;86.1V(BR) max at IR 1.0mA;113V(CL) at Ipp 5.3A;Bidirectional
9	P6KE82CP	6		A1ee	IRM 5.0uA at 70.1VRM;90.2V(BR) max at IR 1.0mA;113V(CL) at Ipp 5.3A;Bidirectional
10	P6KE82P	6		A1ee	IRM 5.0uA at 70.1VRM;90.2V(BR) max at IR 1.0mA;113V(CL) at Ipp 5.3A
11	P6KE91CA	6		A1ee	IRM 5.0uA at 77.8VRM;95.5V(BR) max at IR 1.0mA;125V(CL) at Ipp 4.8A;Bidirectional
12	P6KE91CP	6		A1ee	IRM 5.0uA at 77.8VRM;100V(BR) max at IR 1.0mA;125V(CL) at Ipp 4.8A
13	P6KE91P	6		A1ee	IRM 5.0uA at 77.8VRM;100V(BR) max at IR 1.0mA;125V(CL) at Ipp 4.8A
14	P6KE100CA	6		A1ee	IRM 5.0uA at 85.5VRM;105V(BR) max at IR 1.0mA;137V(CL) at Ipp 4.4A;Bidirectional
15	P6KE100CP	6		A1ee	IRM 5.0uA at 85.5VRM;110V(BR) max at IR 1.0mA;137V(CL) at Ipp 4.4A;Bidirectional
16	P6KE100P	6		A1ee	IRM 5.0uA at 85.5VRM;110V(BR) max at IR 1.0mA;137V(CL) at Ipp 4.4A
17	P6KE110CA	6		A1ee	IRM 5.0uA at 94VRM;116V(BR) max at IR 1.0mA;152V(CL) at Ipp 3.9A;Bidirectional
18	P6KE110CP	6		A1ee	IRM 5.0uA at 94VRM;121V(BR) max at IR 1.0mA;152V(CL) at Ipp 3.9A;Bidirectional
19	P6KE110P	6		A1ee	IRM 5.0uA at 94VRM;121V(BR) max at IR 1.0mA;152V(CL) at Ipp 3.9A
20	P6KE120CA	6		A1ee	IRM 5.0uA at 102VRM;132V(BR) max at IR 1.0mA;165V(CL) at Ipp 3.6A;Bidirectional
21	P6KE120CP	6		A1ee	IRM 5.0uA at 102VRM;132V(BR) max at IR 1.0mA;165V(CL) at Ipp 3.6A;Bidirectional
22	P6KE120P	6		A1ee	IRM 5.0uA at 102VRM;132V(BR) max at IR 1.0mA;165V(CL) at Ipp 3.6A
23	P6KE130CA	6		A1ee	IRM 5.0uA at 111VRM;137V(BR) max at IR 1.0mA;179V(CL) at Ipp 3.4A;Bidirectional
24	P6KE130CP	6		A1ee	IRM 5.0uA at 111VRM;143V(BR) max at IR 1.0mA;179V(CL) at Ipp 3.4A;Bidirectional
25	P6KE130P	6		A1ee	IRM 5.0uA at 111VRM;143V(BR) max at IR 1.0mA;179V(CL) at Ipp 3.4A
26	P6KE150CA	6		A1ee	IRM 5.0uA at 128VRM;158V(BR) max at IR 1.0mA;207V(CL) at Ipp 2.9A;Bidirectional
27	P6KE150CP	6		A1ee	IRM 5.0uA at 128VRM;165V(BR) max at IR 1.0mA;207V(CL) at Ipp 2.9A;Bidirectional
28	P6KE150P	6		A1ee	IRM 5.0uA at 128VRM;165V(BR) max at IR 1.0mA;207V(CL) at Ipp 2.9A
29	P6KE160CA	6		A1ee	IRM 5.0uA at 136VRM;168V(BR) max at IR 1.0mA;219V(CL) at Ipp 2.7A;Bidirectional
30	P6KE160CP	6		A1ee	IRM 5.0uA at 136VRM;176V(BR) max at IR 1.0mA;219V(CL) at Ipp 2.7A;Bidirectional
31	P6KE160P	6		A1ee	IRM 5.0uA at 136VRM;176V(BR) max at IR 1.0mA;219V(CL) at Ipp 2.7A
32	P6KE170CA	6		A1ee	IRM 5.0uA at 145VRM;179V(BR) max at IR 1.0mA;234V(CL) at Ipp 2.6A;Bidirectional
33	P6KE170CP	6		A1ee	IRM 5.0uA at 145VRM;187V(BR) max at IR 1.0mA;234V(CL) at Ipp 2.6A;Bidirectional
34	P6KE170P	6		A1ee	IRM 5.0uA at 145VRM;187V(BR) max at IR 1.0mA;234V(CL) at Ipp 2.6A
35	P6KE180CA	6		A1ee	IRM 5.0uA at 154VRM;189V(BR) max at IR 1.0mA;246V(CL) at Ipp 2.4A;Bidirectional
36	P6KE180CP	6		A1ee	IRM 5.0uA at 154VRM;198V(BR) max at IR 1.0mA;246V(CL) at Ipp 2.4A;Bidirectional
37	P6KE180P	6		A1ee	IRM 5.0uA at 154VRM;198V(BR) max at IR 1.0mA;246V(CL) at Ipp 2.4A
38	P6KE200CA	6		A1ee	IRM 5.0uA at 171VRM;210V(BR) max at IR 1.0mA;274V(CL) at Ipp 2.2A;Bidirectional
39	P6KE200CP	6		A1ee	IRM 5.0uA at 171VRM;220V(BR) max at IR 1.0mA;274V(CL) at Ipp 2.2A
40	P6KE200P	6		A1ee	IRM 5.0uA at 171VRM;220V(BR) max at IR 1.0mA;274V(CL) at Ipp 2.2A
41	P6KE220A	6		A1ee	IRM 5.0uA at 188VRM;231V(BR) max at IR 1.0mA;301V(CL) at Ipp 2A
42	P6KE220CA	6		A1ee	IRM 5.0uA at 188VRM;231V(BR) max at IR 1.0mA;301V(CL) at Ipp 2A;Bidirectional
43	P6KE220CP	6		A1ee	IRM 5.0uA at 188VRM;242V(BR) max at IR 1.0mA;301V(CL) at Ipp 2A;Bidirectional
44	P6KE220P	6		A1ee	IRM 5.0uA at 188VRM;242V(BR) max at IR 1.0mA;301V(CL) at Ipp 2A
45	P6KE250A	6		A1ee	IRM 5.0uA at 213VRM;263V(BR) max at IR 1.0mA;344V(CL) at Ipp 2A
46	P6KE250CA	6		A1ee	IRM 5.0uA at 213VRM;263V(BR) max at IR 1.0mA;344V(CL) at Ipp 2A;Bidirectional
47	P6KE250CP	6		A1ee	IRM 5.0uA at 213VRM;275V(BR) max at IR 1.0mA;344V(CL) at Ipp 2A;Bidirectional
48	P6KE250P	6		A1ee	IRM 5.0uA at 213VRM;275V(BR) max at IR 1.0mA;344V(CL) at Ipp 2A
49	P6KE280A	6		A1ee	IRM 5.0uA at 239VRM;294V(BR) max at IR 1.0mA;384V(CL) at Ipp 2A
50	P6KE280CA	6		A1ee	IRM 5.0uA at 239VRM;294V(BR) max at IR 1.0mA;384V(CL) at Ipp 2A;Bidirectional
51	P6KE280CP	6		A1ee	IRM 5.0uA at 239VRM;308V(BR) max at IR 1.0mA;384V(CL) at Ipp 2A;Bidirectional
52	P6KE280P	6		A1ee	IRM 5.0uA at 239VRM;308V(BR) max at IR 1.0mA;384V(CL) at Ipp 2A
53	P6KE300A	6		A1ee	IRM 5.0uA at 256VRM;315V(BR) max at IR 1.0mA;414V(CL) at Ipp 1.6A
54	P6KE300CA	6		A1ee	IRM 5.0uA at 256VRM;315V(BR) max at IR 1.0mA;414V(CL) at Ipp 1.6A;Bidirectional
55	P6KE300CP	6		A1ee	IRM 5.0uA at 256VRM;330V(BR) max at IR 1.0mA;414V(CL) at Ipp 1.6A;Bidirectional
56	P6KE300P	6		A1ee	IRM 5.0uA at 256VRM;330V(BR) max at IR 1.0mA;414V(CL) at Ipp 1.6A
57	P6KE320A	6		A1ee	IRM 5.0uA at 273VRM;336V(BR) max at IR 1.0mA;438V(CL) at Ipp 1.6A
58	P6KE320CA	6		A1ee	IRM 5.0uA at 273VRM;336V(BR) max at IR 1.0mA;438V(CL) at Ipp 1.6A;Bidirectional
59	P6KE320CP	6		A1ee	IRM 5.0uA at 273VRM;352V(BR) max at IR 1.0mA;438V(CL) at Ipp 1.6A;Bidirectional
60	P6KE320P	6		A1ee	IRM 5.0uA at 273VRM;352V(BR) max at IR 1.0mA;438V(CL) at Ipp 1.6A
61	P6KE350A	6		A1ee	IRM 5.0uA at 299VRM;368V(BR) max at IR 1.0mA;482V(CL) at Ipp 1.6A
62	P6KE350CA	6		A1ee	IRM 5.0uA at 299VRM;368V(BR) max at IR 1.0mA;482V(CL) at Ipp 1.6A;Bidirectioanl
63	P6KE350CP	6		A1ee	IRM 5.0uA at 299VRM;385V(BR) max at IR 1.0mA;482V(CL) at Ipp 1.6A;Bidirectioanl
64	P6KE350P	6		A1ee	IRM 5.0uA at 299VRM;385V(BR) max at IR 1.0mA;482V(CL) at Ipp 1.6A
65	P6KE400A	6		A1ee	IRM 5.0uA at 342VRM;420V(BR) max at IR 1.0mA;548V(CL) at Ipp 1.3A
66	P6KE400CA	6		A1ee	IRM 5.0uA at 342VRM;420V(BR) max at IR 1.0mA;548V(CL) at Ipp 1.3A;Bidirectional
67	P6KE400CP	6		A1ee	IRM 5.0uA at 342VRM;440V(BR) max at IR 1.0mA;548V(CL) at Ipp 1.3A;Bidirectional
68	P6KE400P	6		A1ee	IRM 5.0uA at 342VRM;440V(BR) max at IR 1.0mA;548V(CL) at Ipp 1.3A
69	P6KE440A	6		A1ee	IRM 5.0uA at 376VRM;462V(BR) max at IR 1.0mA;603V(CL) at Ipp 1.3A
70	P6KE440CA	6		A1ee	IRM 5.0uA at 376VRM;462V(BR) max at IR 1.0mA;603V(CL) at Ipp 1.3A;Bidirectional
71	P6KE440CP	6		A1ee	IRM 5.0uA at 376VRM;484V(BR) max at IR 1.0mA;603V(CL) at Ipp 1.3A;Bidirectional
72	P6KE440P	6		A1ee	IRM 5.0uA at 376VRM;484V(BR) max at IR 1.0mA;603V(CL) at Ipp 1.3A
73	PFC6V4	6		DO27	Voltage Suppressor;V(BR) 7.88V max;IRM 1000uA at VRM 6.40
74	PFC7V0	6		DO27	Voltage Suppressor;V(BR) 8.61V max;IRM 500uA at VRM 7.02
75	PFC7V8	6		DO27	Voltage Suppressor;V(BR) 9.55V max;IRM 200uA at VRM 7.78
76	PFC8V5	6		DO27	Voltage Suppressor;V(BR) 10.5V max;IRM 50uA at VRM 8.55
77	PFC9V4	6		DO27	Voltage Suppressor;V(BR) 11.6V max;IRM 10uA at VRM 9.40
78	PFC10	6		DO27	Voltage Suppressor;V(BR) 12.6V max;IRM 5uA at VRM 10.2
79	PFC11	6		DO27	Voltage Suppressor;V(BR) 13.7V max;IRM 5uA at VRM 11.1
80	PFC13	6		DO27	Voltage Suppressor;V(BR) 15.8V max;IRM 5uA at VRM 12.8
81	PFC14	6		DO27	Voltage Suppressor;V(BR) 16.8V max;IRM 5uA at VRM 13.6
82	PFC15	6		DO27	Voltage Suppressor;V(BR) 18.9V max;IRM 5uA at VRM 15.3
83	PFC17	6		DO27	Voltage Suppressor;V(BR) 21V max;IRM 5uA at VRM 17.1
84	PFC19	6		DO27	Voltage Suppressor;V(BR) 23.1V max;IRM 5uA at VRM 18.89
85	PFC20	6		DO27	Voltage Suppressor;V(BR) 25.2V max;IRM 5uA at VRM 20.5V
86	PFC23	6		DO27	Voltage Suppressor;V(BR) 28.4V max;IRM 5uA at VRM 23.1V
87	PFC26	6		DO27	Voltage Suppressor;V(BR) 31.5V max;IRM 5uA at VRM 25.6V
88	PFC28	6		DO27	Voltage Suppressor;V(BR) 34.7V max;IRM 5uA at VRM 28.2V
89	PFC31	6		DO27	Voltage Suppressor;V(BR) 37.8V max;IRM 5uA at VRM 30.8V
90	PFC33	6		DO27	Voltage Suppressor;V(BR) 41V max;IRM 5uA at VRM 33.3V
91	PFC37	6		DO27	Voltage Suppressor;V(BR) 45.2V max;IRM 5uA at VRM 36.8V
92	PFC40	6		DO27	Voltage Suppressor;V(BR) 49.4V max;IRM 5uA at VRM 40.2V
93	PFC44	6		DO27	Voltage Suppressor;V(BR) 53.6V max;IRM 5uA at VRM 43.6V
94	PFC48	6		DO27	Voltage Suppressor;V(BR) 58.8V max;IRM 5uA at VRM 47.8V
95	PFC53	6		DO27	Voltage Suppressor;V(BR) 65.1V max;IRM 5uA at VRM 53V
96	PFC58	6		DO27	Voltage Suppressor;V(BR) 71.4V max;IRM 5uA at VRM 58.1V
97	PFC64	6		DO27	Voltage Suppressor;V(BR) 78.8V max;IRM 5uA at VRM 64.1V
98	PFC70	6		DO27	Voltage Suppressor;V(BR) 86.1V max;IRM 5uA at VRM 70.1V
99	PFC78	6		DO27	Voltage Suppressor;V(BR) 95.5V max;IRM 5uA at VRM 77.8V
100	PFC85	6		DO27	Voltage Suppressor;V(BR) 105V max;IRM 5uA at VRM 85.5V
101	PFC94	6		DO27	Voltage Suppressor;V(BR) 116V max;IRM 5uA at VRM 94V
102	PFC102	6		DO27	Voltage Suppressor;V(BR) 126V max;IRM 5uA at VRM 102V
103	PFC111	6		DO27	Voltage Suppressor;V(BR) 137V max;IRM 5uA at VRM 111V
104	PFC128	6		DO27	Voltage Suppressor;V(BR) 158V max;IRM 5uA at VRM 128V
105	PFC136	6		DO27	Voltage Suppressor;V(BR) 168V max;IRM 5uA at VRM 136V
106	PFC145	6		DO27	Voltage Suppressor;V(BR) 179V max;IRM 5uA at VRM 145V
107	PFC154	6		DO27	Voltage Suppressor;V(BR) 189V max;IRM 5uA at VRM 154V
108	PFC171	6		DO27	Voltage Suppressor;V(BR) 210V max;IRM 5uA at VRM 171V
109	PFZ6V8P	6		A398k	IRM 1.0mA at 5.8VRM;7.48V(BR) max at 10mA;10.5V(CL) at Ipp 143A
110	PFZ7V5P	6		A398k	IRM 500uA at 6.4VRM;8.25V(BR) max at IR 10mA;11.3V(CL) at Ipp 132A

7. TRANSIENT SUPPRESSOR DIODES - Bipolar & Unipolar Types (Cont'd)

IN ORDER OF (1) TYPE (2) MAT AND (3) TYPE NO.

LINE No.	3 TYPE NUMBER	1 TYPE	2 MAT.	DWG. NO.	DESCRIPTION
1	PFZ8V2P	6		A398k	IRM 200uA at 7.02VRM;9.02V(BR) max at IR 10mA;12.1V(CL) at Ipp 124A
2	PFZ9V1P	6		A398k	IRM 50uA at 7.78VRM;10V(BR) max at IR 1.0mA;13.4V(CL) at Ipp 112A
3	PFZ10P	6		A398k	IRM 10mA at 8.55VRM;11V(BR) max at IR 1.0mA;14.5V(CL) at Ipp 103A
4	PFZ11P	6		A398k	IRM 5.0uA at 9.4VRM;12.1V(BR) max at IR 1.0mA;15.6V(CL) at Ipp 96A
5	PFZ12P	6		A398k	IRM 5.0uA at 10.2VR4;13.2V(BR) max at IR 1.0mA;16.7V(CL) at Ipp 90A
6	PFZ13P	6		A398k	IRM 5.0uA at 11.1VRM;14.3V(BR) max at IR 1.0mA;18.2V(CL) at Ipp 82A
7	PFZ15P	6		A398k	IRM 5.0uA at 12.8VRM;16.5V(BR) max at IR 1.0mA;21.2V(CL) at Ipp 71A
8	PFZ16P	6		A398k	IRM 5.0uA at 13.6VRM;17.6V(BR) max at IR 1.0mA;22.5V(CL) at Ipp 67A
9	PFZ18P	6		A398k	IRM 5.0uA at 15.3VRM;19.8V(BR) max at IR 1.0mA;25.2V(CL) at Ipp 59.5A
10	PFZ20P	6		A398k	IRM 5.0uA at 17.1VRM;22V(BR) max at IR 1.0mA;27.7V(CL) at Ipp 54A
11	PFZ22P	6		A398k	IRM 5.0uA at 18.8VRM;24.2V(BR) max at IR 1.0mA;30.6V(CL) at Ipp 49A
12	PFZ24P	6		A398k	IRM 5.1uA at 20.5VRM;26.4V(BR) max at IR 1.0mA;33.2V(CL) at Ipp 45A
13	PFZ27P	6		A398k	IRM 5.0uA at 23.1VRM;29.7V(BR) max at IR 1.0mA;37.5V(CL) at Ipp 40A
14	PFZ30P	6		A398k	IRM 5.0uA at 25.6VRM;33V(BR) max at IR 1.0mA;41.4V(CL) at Ipp 36A
15	PFZ33P	6		A398k	IRM 5.0uA at 28.2VRM;36.3V(BR) max at IR 1.0mA;45.7V(CL) at Ipp 33A
16	PFZ36P	6		A398k	IRM 5.0uA at 30.8VRM;39.6V(BR) max at IR 1.0mA;49.9V(CL) at Ipp 30A
17	PFZ39P	6		A398k	IRM 5.0uA at 33.3VRM;42.9V(BR) max at IR 1.0mA;53.9V(CL) at Ipp 28A
18	PFZ43P	6		A398k	IRM 5.0uA at 36.8VRM;47.3V(BR) max at IR 1.0mA;59.3V(CL) at Ipp 25.3A
19	PFZ47P	6		A398k	IRM 5.0uA at 40.2VRM;51.7V(BR) max at IR 1.0mA;64.8V(CL) at Ipp 23.2A
20	PFZ51P	6		A398k	IRM 5.0uA at 43.6VRM;56.1V(BR) max at IR 1.0mA;70.1V(CL) at Ipp 21.4A
21	PFZ56P	6		A398k	IRM 5.0uA at 47.8VRM;61.6V(BR) max at IR 1.0mA;77V(CL) at Ipp 19.5A
22	PFZ62P	6		A398k	IRM 5.0uA at 53VRM;68.2V(BR) max at IR 1.0mA;85V(CL) at Ipp 17.7A
23	PFZ68P	6		A398k	IRM 5.0uA at 58.1VRM;74.8V(BR) max at IR 1.0mA;92V(CL) at Ipp 16.3A
24	PFZ75P	6		A398k	IRM 5.1uA at 64.1VRM;82.5V(BR) max at IR 1.0mA;103V(CL) at Ipp 14.6A
25	PFZ82P	6		A398k	IRM 5.0uA at 70.1VRM;90.2V(BR) max at IR 1.0mA;113V(CL) at Ipp 13.3A
26	PFZ91P	6		A398k	IRM 5.0uA at 77.8VRM;100V(BR) max at IR 1.0mA;125V(CL) at Ipp 12A
27	PFZ100P	6		A398k	IRM 5.0uA at 85.5VRM;110V(BR) max at IR 1.0mA;137V(CL) at Ipp 11A
28	PFZ110P	6		A398k	IRM 5.0uA at 94VRM;121V(BR) max at IR 1.0mA;152V(CL) at Ipp 9.9A
29	PFZ120P	6		A398k	IRM 5.0uA at 102VRM;132V(BR) max at IR 1.0mA;165V(CL) at Ipp 9.1A
30	PFZ130P	6		A398k	IRM 5.0uA at 111VRM;143V(BR) max at IR 1.0mA;179V(CL) at Ipp 8.4A
31	PFZ150P	6		A398k	IRM 5.0uA at 128VRM;165V(BR) max at IR 1.0mA;207V(CL) at Ipp 7.2A
32	PFZ160P	6		A398k	IRM 5.0uA at 136VRM;176V(BR) max at IR 1.0mA;219V(CL) at Ipp 6.8A
33	PFZ170P	6		A398k	IRM 5.0uA at 145VRM;187V(BR) max at IR 1.0mA;234V(CL) at Ipp 6.4A
34	PFZ180P	6		A398k	IRM 5.0uA at 154VRM;198V(BR) max at IR 1.0mA;246V(CL) at Ipp 6.1A
35	PFZ200P	6		A398k	IRM 5.0uA at 171VRM;220V(BR) max at IR 1.0mA;274V(CL) at Ipp 5.5A
36	PFZ220P	6		A398k	IRM 5.0uA at 185VRM;242V(BR) max at IR 1.0mA;328V(CL) at Ipp 4.6A
37	PFZ250A	6		A398k	IRM 5.0uA at 213VRM;263V(BR) max at IR 1.0mA;344V(CL) at Ipp 5.0A
38	PFZ250P	6		A398k	IRM 5.0uA at 213VRM;275V(BR) max at IR 1.0mA;344V(CL) at Ipp 5.0A
39	PFZ280A	6		A398k	IRM 5.0uA at 239VRM;294V(BR) max at IR 1.0mA;384V(CL) at Ipp 5.0A
40	PFZ280P	6		A398k	IRM 5.0uA at 239VRM;308V(BR) max at IR 1.0mA;384V(CL) at Ipp 5.0A
41	PFZ300A	6		A398k	IRM 5.0uA at 256VRM;315V(BR) max at IR 1.0mA;414V(CL) at Ipp 5.0A
42	PFZ300P	6		A398k	IRM 5.0uA at 256VRM;300V(BR) max at IR 1.0mA;414V(CL) at Ipp 5.0A
43	PFZ320A	6		A398k	IRM 5.0uA at 273VRM;336V(BR) max at IR 1.0mA;438V(CL) at Ipp 4.5A
44	PFZ320P	6		A398k	IRM 5.0uA at 273VRM;352V(BR) max at IR 1.0mA;438V(CL) at Ipp 4.5A
45	PFZ350A	6		A398k	IRM 5.0uA at 299VRM;368V(BR) max at IR 1.0mA;482V(CL) at Ipp 4.0A
46	PFZ350P	6		A398k	IRM 5.0uA at 299VRM;385V(BR) max at IR 1.0mA;482V(CL) at Ipp 4.0A
47	PFZ400A	6		A398k	IRM 5.0uA at 342VRM;420V(BR) max at IR 1.0mA;548V(CL) at Ipp 4.0A
48	PFZ400P	6		A398k	IRM 5.0uA at 342VRM;440V(BR) max at IR 1.0mA;548V(CL) at Ipp 4.0A
49	PFZ440A	6		A398k	IRM 5.0uA at 376VRM;462V(BR) max at IR 1.0mA;603V(CL) at Ipp 3.5A
50	PFZ440P	6		A398k	IRM 5.0uA at 376VRM;484V(BR) max at IR 1.0mA;603V(CL) at Ipp 3.5A
51	PZD16	6			Voltage Suppressor;V(BR) 20V max;IRM 5mA at VRM 10V
52	PZD36	6			Voltage Suppressor;V(BR) 43.5V max;IRM 5mA at VRM 25V
53	PZD62	6		DO27	Voltage Suppressor;V(BR) 75V max;IRM 5mA at VRM 42V
54	PZD160	6		DO27	Voltage Suppressor;V(BR) 200V max;IRM 5mA at VRM 110V
55	S5555E	6		A69j	VR 30.5V;VB 33V at IT 1.0mA;IR 5.0uA max;IPP 32A;TC .093%/°C
56	S5556E	6		A69j	VR 40.3V;VB 43.7V at IT 1.0mA;IR 5.0uA max;IPP 24A;TC .094%/°C
57	S5557E	6		A69j	VR 49.0V;VB 54V at IT 1.0mA;IR 5.0uA max;IPP 19A;TC .096%/°C
58	S5558E	6		A69j	VR 175V;VB 191V at IT 1.0mA;IR 5.0uA max;IPP 5.7A;TC .100%/°C
59	S5907	6		DO13	VR 5.4V;VB 6V at IT 1mA;IR 100uA max;IPP 120A
60	S5908	6		A69j	VR 5.4V;VB 6V at IT 1mA;IR 100uA max;IPP 120A
61	SPIP8.4	6		M1338	VR12V;IR250A;BVmin14VatIt10mA;Vc22VatIp341A
62	SPIP24	6		M1338	VR34V;IR250A;BVmin40atIt10mA;Vc67VatIp112A
63	SPIP30	6		M1338	VR42.5V;IR250A;BVmin50atIt1.0mA;Vc84VatIp90A
64	SPIP60	6		M1338	VR85V;IR250A;BVmin100atIt1.0mA;Vc167VatIp90A
65	SPIP120	6		M1338	VR170V;IR250A;BVmin200atIt1.0mA;Vc319VatIp47A
66	SPIP208	6		M1338	VR295V;IR250A;BVmin347atIt1.0mA;Vc536VatIp28A
67	SPIP250	6		M1338	VR354V;IR250A;BVmin418atIt1.0mA;Vc652VatIp23A
68	SPIP440	6		M1338	VR623V;IR250A;BVmin735atIt1.0mA;Vc1138VatIp13.2A
69	SPIP500	6		M1338	VR708V;IR250A;BVmin835atIt1.0mA;Vc1292VatIp11.6A
70	T-GMP5	6		A344r	IRM 300uA at 5.0VRM;5.3V(BR) min at IR 1.0mA;6.7V(CL) at Ipp 1.0A
71	T-GMP5A	6		A344r	IRM 100uA at 5.0VRM;5.3V(BR) min at IR 1.0mA;6.7V(CL) at Ipp 1.0A
72	T-GMP5B	6		A344r	IRM 300uA at 5.0VRM;5.3V(BR) min at IR 1.0mA;6.4V(CL) at Ipp 1.0A
73	TPA62A12	6		A344r	IRM 2.0uA at 56VRM;62V(BR) min at IR 1.0mA;82V(CL) at 300mA;IH 120mA
74	TPA62A18	6		A344r	IRM 2.0uA at 56VRM;62V(BR) min at IR 1.0mA;82V(CL) at 300mA;IH 180mA
75	TPA62B12	6		A344r	IRM 2.0uA at 56VRM;62V(BR) min at IR 1.0mA;75V(CL) at 300mA;IH 120mA
76	TPA62B18	6		A344r	IRM 2.0uA at 56VRM;62V(BR) min at IR 1.0mA;75V(CL) at 300mA;IH 180mA
77	TPA68A12	6		A344r	IRM 2.0uA at 61VRM;68V(BR) min at IR 1.0mA;90V(CL) at 300mA;IH 120mA
78	TPA68A18	6		A344r	IRM 2.0uA at 61VRM;68V(BR) min at IR 1.0mA;90V(CL) at 300mA;IH 180mA
79	TPA68B12	6		A344r	IRM 2.0uA at 61VRM;68V(BR) min at IR 1.0mA;82V(CL) at 300mA;IH 120mA
80	TPA68B18	6		A344r	IRM 2.0uA at 61VRM;68V(BR) min at IR 1.0mA;82V(CL) at 300mA;IH 180mA
81	TPA75A12	6		A344r	IRM 2.0uA at 67VRM;75V(BR) min at IR 1.0mA;100V(CL) at 300mA;IH 120mA
82	TPA75A18	6		A344r	IRM 2.0uA at 67VRM;75V(BR) min at IR 1.0mA;100V(CL) at 300mA;IH 180mA
83	TPA75B12	6		A344r	IRM 2.0uA at 67VRM;75V(BR) min at IR 1.0mA;91V(CL) at 300mA;IH 120mA
84	TPA75B18	6		A344r	IRM 2.0uA at 67VRM;75V(BR) min at IR 1.0mA;91V(CL) at 300mA;IH 180mA
85	TPA82A12	6		A344r	IRM 2.0uA at 74VRM;82V(BR) min at IR 1.0mA;109V(CL) at 300mA;IH 120mA
86	TPA82A18	6		A344r	IRM 2.0uA at 74VRM;82V(BR) min at IR 1.0mA;109V(CL) at 300mA;IH 180mA
87	TPA82B12	6		A344r	IRM 2.0uA at 74VRM;82V(BR) min at IR 1.0mA;99V(CL) at 300mA;IH 120mA
88	TPA82B18	6		A344r	IRM 2.0uA at 74VRM;82V(BR) min at IR 1.0mA;99V(CL) at 300mA;IH 180mA
89	TPA91A12	6		A344r	IRM 2.0uA at 82VRM;91V(BR) min at IR 1.0mA;121V(CL) at 300mA;IH 120mA
90	TPA91A18	6		A344r	IRM 2.0uA at 82VRM;91V(BR) min at IR 1.0mA;121V(CL) at 300mA;IH 180mA
91	TPA91B12	6		A344r	IRM 2.0uA at 82VRM;91V(BR) min at IR 1.0mA;110V(CL) at 300mA;IH 120mA
92	TPA91B18	6		A344r	IRM 2.0uA at 82VRM;91V(BR) min at IR 1.0mA;110V(CL) at 300mA;IH 180mA
93	TPA100A12	6		A344r	IRM 2.0uA at 90VRM;100V(BR) min at IR 1.0mA;133V(CL) at 300mA;IH 120mA
94	TPA100A18	6		A344r	IRM 2.0uA at 90VRM;100V(BR) min at IR 1.0mA;133V(CL) at 300mA;IH 180mA
95	TPA100B12	6		A344r	IRM 2.0uA at 90VRM;100V(BR) min at IR 1.0mA;121V(CL) at 300mA;IH 120mA
96	TPA100B18	6		A344r	IRM 2.0uA at 90VRM;100V(BR) min at IR 1.0mA;121V(CL) at 300mA;IH 180mA
97	TPA110A12	6		A344r	IRM 2.0uA at 99VRM;110V(BR) min at IR 1.0mA;147V(CL) at 300mA;IH 120mA
98	TPA110A18	6		A344r	IRM 2.0uA at 99VRM;110V(BR) min at IR 1.0mA;147V(CL) at 300mA;IH 180mA
99	TPA110B12	6		A344r	IRM 2.0uA at 99VRM;110V(BR) min at IR 1.0mA;133V(CL) at 300mA;IH 120mA
100	TPA110B18	6		A344r	IRM 2.0uA at 99VRM;110V(BR) min at IR 1.0mA;133V(CL) at 300mA;IH 180mA
101	TPA120A12	6		A344r	IRM 2.0uA at 108VRM;120V(BR) min at IR 1.0mA;160V(CL) at 300mA;IH 120mA
102	TPA120A18	6		A344r	IRM 2.0uA at 108VRM;120V(BR) min at IR 1.0mA;160V(CL) at 300mA;IH 180mA
103	TPA120B12	6		A344r	IRM 2.0uA at 108VRM;120V(BR) min at IR 1.0mA;145V(CL) at 300mA;IH 120mA
104	TPA120B18	6		A344r	IRM 2.0uA at 108VRM;120V(BR) min at IR 1.0mA;145V(CL) at 300mA;IH 180mA
105	TPA130A12	6		A344r	IRM 2.0uA at 117VRM;130V(BR) min at IR 1.0mA;173V(CL) at 300mA;IH 120mA
106	TPA130A18	6		A344r	IRM 2.0uA at 117VRM;130V(BR) min at IR 1.0mA;173V(CL) at 300mA;IH 180mA
107	TPA130B12	6		A344r	IRM 2.0uA at 117VRM;130V(BR) min at IR 1.0mA;157V(CL) at 300mA;IH 120mA
108	TPA130B18	6		A344r	IRM 2.0uA at 117VRM;130V(BR) min at IR 1.0mA;157V(CL) at 300mA;IH 180mA
109	TPA150A12	6		A344r	IRM 2.0uA at 135VRM;150V(BR) min at IR 1.0mA;200V(CL) at 300mA;IH 120mA
110	TPA150A18	6		A344r	IRM 2.0uA at 135VRM;150V(BR) min at IR 1.0mA;200V(CL) at 300mA;IH 180mA

7. TRANSIENT SUPPRESSOR DIODES - Bipolar & Unipolar Types (Cont'd)

IN ORDER OF (1) TYPE (2) MAT AND (3) TYPE NO.

LINE No.	3 TYPE NUMBER	1 TYPE	2 MAT.	DWG. NO.	DESCRIPTION
1	TPA150B12	6		A344r	IRM 2.0uA at 135VRM;150V(BR) min at IR 1.0mA;181V(CL) at 300mA;IH 120mA
2	TPA150B18	6		A344r	IRM 2.0uA at 135VRM;150V(BR) min at IR 1.0mA;181 V(CL) at 300mA;IH 180mA
3	TPA160A18	6		A344r	IRM 2.0uA at 144VRM;160V(BR) min at IR 1.0mA;213 V(CL) at 300mA;IH 180mA
4	TPA160B12	6		A344r	IRM 2.0uA at 144VRM;160V(BR) min at IR 1.0mA;193 V(CL) at 300mA;IH 120mA
5	TPA160B18	6		A344r	IRM 2.0uA at 144VRM;160V(BR) min at IR 1.0mA;193 V(CL) at 300mA;IH 180mA
6	TPA180A12	6		A344r	IRM 2.0uA at 162VRM;180V(BR) min at IR 1.0mA;240 V(CL) at 300mA;IH 120mA
7	TPA180A18	6		A344r	IRM 2.0uA at 162VRM;180V(BR) min at IR 1.0mA;240 V(CL) at 300mA;IH 180mA
8	TPA180B12	6		A344r	IRM 2.0uA at 162VRM;180V(BR) min at IR 1.0mA;217 V(CL) at 300mA;IH 120mA
9	TPA180B18	6		A344r	IRM 2.0uA at 162VRM;180V(BR) min at IR 1.0mA;217 V(CL) at 300mA;IH 180mA
10	TPA200A12	6		A344r	IRM 2.0uA at 180VRM;200V(BR) min at IR 1.0mA;267 V(CL) at 300mA;IH 120mA
11	TPA200A18	6		A344r	IRM 2.0uA at 180VRM;200V(BR) min at IR 1.0mA;267 V(CL) at 300mA;IH 180mA
12	TPA200B12	6		A344r	IRM 2.0uA at 180VRM;200V(BR) min at IR 1.0mA;241 V(CL) at 300mA;IH 120mA
13	TPA200B18	6		A3445	IRM 2.0uA at 180VRM;200V(BR) min at IR 1.0mA;241V(CL) at 300mA;IH180mA
14	TPA220A12	6		A3445	IRM 2.0uA at 198VRM;220V(BR) min at IR 1.0mA;293V(CL) at 300mA;IH120mA
15	TPA220A18	6		A3445	IRM 2.0uA at 198VRM;220V(BR) min at IR 1.0mA;293V(CL) at 300mA;IH180mA
16	TPA220B12	6		A3445	IRM 2.0uA at 198VRM;220V(BR) min at IR 1.0mA;265V(CL) at 300mA;IH120mA
17	TPA220B18	6		A3445	IRM 2.0uA at 198VRM;220V(BR) min at IR 1.0mA;265V(CL) at 300mA;IH180mA
18	TPA240A12	6		A3445	IRM 2.0uA at 216VRM;240V(BR) min at IR 1.0mA;320V(CL) at 300mA;IH120mA
19	TPA240A18	6		A3445	IRM 2.0uA at 216VRM;240V(BR) min at IR 1.0mA;320V(CL) at 300mA;IH180mA
20	TPA240B12	6		A3445	IRM 2.0uA at 216VRM;240V(BR) min at IR 1.0mA;289V(CL) at 300mA;IH120mA
21	TPA240B18	6		A3445	IRM 2.0uA at 216VRM;240V(BR) min at IR 1.0mA;289V(CL) at 300mA;IH180mA
22	TPA270A12	6		A3445	IRM 2.0uA at 243VRM;270V(BR) min at IR 1.0mA;360V(CL) at 300mA;IH120mA
23	TPA270A18	6		A3445	IRM 2.0uA at 243VRM;270V(BR) min at IR 1.0mA;360V(CL) at 300mA;IH180mA
24	TPA270B12	6		A3445	IRM 2.0uA at 243VRM;270V(BR) min at IR 1.0mA;325V(CL) at 300mA;IH120mA
25	TPA270B18	6		A344r	IRM 2.0uA at 243VRM;270V(BR) min at IR 1.0mA;325V(CL) at 300mA;IH 180mA
26	TVS5-1(M)	6		A380a	VR 5.0V;IFSM 50A;PR 5.0W;Ipp 45A;IR 1.0mA at 5V,Min. Zz500Ω
27	TVS5-2(M)	6		A380a	VR 5.0V;IFSM 50A;PR 5.0W;Ipp 45A;IR 0.7mA at 5V,Min. Zz800Ω
28	TVS5-3(M)	6		A380a	VR 5.0V;IFSM 50A;PR 5.0W;Ipp 53.7A;IR 0.3mA at 5V,Min. Zz3.0kΩ
29	TVS305	6		A380	IRM 50uA at 5.0VRM;6.0V(BR) min at IR 1.0mA;8.7V(CL) at Ipp 17A
30	TVS310	6		A380	IRM 2.0uA at 10VRM;11.1V(BR) min at IR 1.0mA;16.8V(CL) at Ipp 8.9A
31	TVS312	6		A380	IRM 1.0uA at 12VRM;13.8V(BR) min at IR 1.0mA;21.0V(CL) at Ipp 7.1A
32	TVS315	6		A380	IRM 1.0uA at 15VRM;16.7V(BR) min at IR 1.0mA;25.0V(CL) at Ipp 5.9A
33	TVS318	6		A380	IRM 1.0uA at 18VRM;20.4V(BR) min at IR 1.0mA;31V(CL) at Ipp 4.9A
34	TVS324	6		A380	IRM 1.0uA at 24VRM;28.4V(BR) min at IR 1.0mA;42V(CL) at Ipp 3.6A
35	TVS328	6		A380	IRM 1.0uA at 28VRM;30.7V(BR) min at IR 1.0mA;46V(CL) at Ipp 3.2A
36	TVS348	6		A380	IRM 1.0uA at 48VRM;54V(BR) min at IR 1.0mA;82V(CL) at Ipp 1.7A
37	TVS360	6		A380	IRM 1.0uA at 60VRM;67V(BR) min at IR 1.0mA;105V(CL) at Ipp 1.4A
38	TVS410	6		A380	IRM 1.0uA at 100VRM;111V(BR) min at IR 1.0mA;160V(CL) at Ipp 910mA
39	TVS420	6		A380	IRM 1.0uA at 200VRM;234V(BR) min at IR 1.0mA;360V(CL) at Ipp 420mA
40	TVS430	6		A380	IRM 1.0uA at 300VRM;342V(BR) min at IR 1.0mA;520V(CL) at Ipp 280mA
41	TVS505	6		A380a	IRM 300uA at 5.0VRM;6.0V(BR) min at IR 1.0mA;9.3V(CL) at Ipp 53.7A
42	TVS510	6		A380a	IRM 5.0uA at 10.0VRM;11.1V(BR) min at IR 1.0mA;16.5V(CL) at Ipp 30.3A
43	TVS512	6		A380a	IRM 5.0uA at 12.0VRM;13.8V(BR) min at IR 1.0mA;21.0V(CL) at Ipp 23.8A
44	TVS515	6		A380a	IRM 5.0uA at 15.0VRM;16.7V(BR) min at IR 1.0mA;25.2V(CL) at Ipp 19.8A
45	TVS518	6		A380a	IRM 5.0uA at 18.0VRM;20.4V(BR) min at IR 1.0mA;30.5V(CL) at Ipp 16.3A
46	TVS524	6		A380a	IRM 5.0uA at 24.0VRM;28.4V(BR) min at IR 1.0mA;42.0V(CL) at Ipp 11.9A
47	TVS528	6		A380a	IRM 5.0uA at 28.0VRM;30.7V(BR) min at IR 1.0mA;46.5V(CL) at Ipp 10.7A
48	TZ17	6			Breakdown Volt Range 18.9-23.1V;VR 17V;Vc 32.3V at 1.0mSec
49	TZ17A	6			Breakdown Volt Range 18.9-20.9V;VR 17V;Vc 29.3V at 1.0mSec
50	TZ18A	6			Breakdown Volt Range 20-22.1V;VR 18V;Vc 30.9V at 1.0m Sec
51	TZ20A	6			Breakdown Volt Range 22.2-24.5V;VR 20V;Vc 34.3V at 1.0mSec
52	TZ22A	6			Breakdown Volt Range 24.4-26.9V;VR 22V;Vc 37.1V at 1.0mSec
53	TZ24A	6			Breakdown Volt Range 26.7-29.5V;VR 24V;Vc 40.7V at 1.0mSec
54	TZ26	6			Breakdown Volt Range 28.9-35.3V;VR 26V;Vc 48.7V at 1.0mSec
55	TZ26A	6			Breakdown Volt Range 28.9-31.9V;VR 26V;Vc 44V at 1.0mSec
56	TZ28	6			Breakdown Volt Range 31.1-38V;VR 28V;Vc 52.4V at 1.0mSec
57	TZ28A	6			Breakdown Volt Range 31.1-34.4V;VR 28V;Vc 47.5V at 1.0mSec
58	TZ30	6			Breakdown Volt Rnage 33.3-40.7V;VR 30V;Vc 56.2V at 1.0 mSec
59	TZ30A	6			Breakdown Volt Range 33.3-36.8V;VR 30V;Vc 50.7V at 1.0mSec
60	TZ33	6			Breakdown Volt Range 36.7-44.9V;VR 33V;Vc 60.6V at 1.0mSec
61	TZ33A	6			Breakdown Volt Range 36.7-40.6V;VR 33V;Vc 54.8V at 1.0mSec
62	TZ36	6			Breakdwon Volt Range 40-48.9V;VR 36V;Vc 66V at 1.0mSec
63	TZ36A	6			Breakdown Volt Range 40-44.2V;VR 36V;Vc 59.7V at 1.0mSec
64	TZ40	6			Breakdown Volt Range 44.4-54.3V;VR 40V;Vc 72.8V at 1.0mSec
65	TZ40A	6			Breakdown Volt Range 44.4-49.1V;VR 40V;Vc 65.8V at 1.0mSecc
66	TZ43	6			Breakdown Volt Range 47.8-58.4V;VR 43V;Vc 77.1V at 1.0mSec
67	TZ43A	6			Breakdown Volt Range 47.8-52.8V;VR 43V;Vc 69.7V at 1.0mSec
68	TZ45	6			Breakdown Volt Range 50-61.1V;VR 45V;Vc 80.7V at 1.0mSec
69	TZ45A	6			Breakdown Volt Range 50-55.3V;VR 45V;Vc 73V at 1.0mSec
70	TZ48	6			Breakdwon Volt Range 53.3-65.1V;VR 48V;Vc 85.9V at 1.0mSec
71	TZ48A	6			Breakdown Volt Range 53.3-58.9V;VR 48V;Vc 77.7V at 1.0 mSecC
72	TZ51	6			Breakdown Volt Range 56.7-69.3V;VR 51V;Vc 91.5V at 1.0mSec
73	TZ51A	6			Breakdown Volt Range 56.7-62.7V;VR 51V;Vc 82.8V at 1.0 mSec
74	TZ54	6			Breakdown Volt Range 60-73.3V;VR 54V;Vc 96.8V at 1.0mSec
75	TZ54A	6			Breakdown Volt Range 60-66.3 V;VR 54V;Vc 87.5V at 1.0 mSec
76	TZ58	6			Breakdown Volt Range 64.4-78.7V;VR 58V;Vc 104V at 1.0mSec
77	TZ58A	6			Breakdown Volt Range 64.4-71.2V;VR 58V;Vc 94V at 1.0mSec
78	TZ60	6			Breakdown Volt Range 66.7-81.5V;VR 60V;Vc 107V at 1.0mSec
79	TZ60A	6			Breakdown Volt Range 66.7-73.7V;VR 60V;Vc 97.3V at 1.0mSec
80	TZ64	6			Breakdown Volt Range 71.1-86.9V;VR 64V;Vc 115V at 1.0mSec
81	TZ64A	6			Breakdown Volt Range 71.1-78.6V;VR 64V;Vc 104V at 1.0mSec
82	TZ70	6			Breakdown Volt Range 77.8-95.1V;VR 70V;Vc 126V at 1.0mSec
83	TZ70A	6			Breakdown Volt Range 77.8-86.V;VR 70V;Vc 114V at 1.0mSec
84	TZ75	6			Breakdown Volt Range 83.3-102V;VR 75V;Vc 135V at 1.0mSec
85	TZ75A	6			Breakdown Volt Range 83.3-92.1V;VR 75V;Vc 122V at 1.0mSec
86	TZ78	6			Breakdown Volt Range 86.7-106V;VR 78V;Vc 140V at 1.0mSec
87	TZ78A	6			Breakdown Volt Range 86.7-95.8V;VR 78V;Vc 126V at 1.0mSec
88	TZ85	6			Breakdown Volt Range 94.4-115V;VR 85V;Vc 152V at 1.0mSec
89	TZ85A	6			Breakdown Volt Range 94.4-104V;VR 85V;Vc 137V at 1.0mSec
90	TZ90	6			Breakdown Volt Range 100-122V;VR 90V;Vc 160V at 1.0mSec
91	TZ90A	6			Breakdown Volt Range 100-111V;VR 90V;Vc 146V at 1.0mSec
92	TZ100	6			Breakdown Volt Range 111-136V;VR 100V;Vc 179V at 1.0mSec
93	TZ100A	6			Breakdown Volt Range 111-123V;VR 100V;Vc 162V at 1.0mSec
94	TZ110	6			Breakdown Volt Range 122-149V;VR 110V;Vc 196V at 1.0mSec
95	TZ110A	6			Breakdown Volt Range 122-135V;VR 110V;Vc 178V at 1.0mSec
96	TZ120	6			Breakdown Volt Range 133-163V;VR 120V;Vc 214V at 1.0mSec
97	TZ120A	6			Breakdown Volt Range 133-147V;VR 120V;Vc 193V at 1.0mSec
98	TZ130	6			Breakdown Volt Range 144-176V;VR 130V;Vc 231V at 1.0mSec
99	TZ130A	6			Breakdown Volt Range 144-159V;VR 130V;Vc 209V at 1.0mSec
100	TZ150	6			Breakdown Volt Range 167-204V;VR 150V;Vc 268V at 1.0mSec
101	TZ150A	6			Breakdown Volt Range 167-185V;VR 150V;Vc 243V at 1.0mSec
102	TZ160	6			Breakdown Volt Range 178-218V;VR 160V;Vc 287V at 1.0mSec
103	TZ160A	6			Breakdown Volt Range 178-197V;VR 160V;Vc 259V at 1.0mSec
104	TZ170	6			Breakdown Volt Range 189-231V;VR 170V;Vc 304V at 1.0mSec
105	TZ170A	6			Breakdown Volt Range 189-209V;VR 170V;Vc 275V at 1.0mSec
106	TZ180	6			Breakdown Volt Range 200-244V;VR 180V;Vc 321V at 1.0mSec
107	TZ180A	6			Breakdown Volt Range 200-221V;VR 180V;Vc 291V at 1.0mSec
108	TZ200	6			Breakdown Volt Range 222-271V;VR 200V;Vc 356V at 1.0mSec
109	TZ200A	6			Breakdown Volt Range 222-245V;VR 200V;Vc 322V at 1.0mSec
110	TZ220	6			Breakdown Volt Range 245-299V;VR 220V;Vc 393V at 1.0mSec

SYMBOLS AND CODES EXPLAINED IN INTERPRETER

7. TRANSIENT SUPPRESSOR DIODES - Bipolar & Unipolar Types (Cont'd)

IN ORDER OF (1) TYPE (2) MAT AND (3) TYPE NO.

LINE No.	3 TYPE NUMBER	1 TYPE	2 MAT.	DWG. NO.	DESCRIPTION
1	TZ220A	6			Breakdown Volt Range 245-271V;VR 220V;Vc 356V at 1.0mSec
2	TZ240	6			Breakdwon Volt Range 267-326V;VR 240V;Vc 428V at 1.0mSec
3	TZ240A	6			Breakdown Volt Range 267-295V;VR 240V;Vc 388V at 1.0mSec
4	TZ260	6			Breakdown Volt Range 289-353V;VR 260V;Vc 464V at 1.0mSec
5	TZ260A	6			Breakdown Volt Range 289-319V;VR 260V;Vc 419V at 1.0mSec
6	TZ280	6			Breakdown Volt Range 311-380V;VR 280V;Vc 500V at 1.0m sec
7	TZ280A	6			Breakdown Volt Range 311-344V;VR 280V;Vc 452V at 1.0m sec
8▼	V8CH8(A)	6		M1362	Vrms 4.0V;Ipeak 100A; Vvar 11V at 1mA max;V clamp 22V at Ip 5A
9▼	V8CP22(A)	6		M1363c	Vrms 4.0V;Ipeak 100A;Vvar 11V at 1mA max;Vclamp 30V at Ip 5A
10▼	V8SM8(A)	6		M1364	Vrms 4.0V;Ipeak 100A;Vvar 11V at 1mA max;Vclamp 22V at Ip 5A
11▼	V12CH8(A)	6		M1362	Vrms 6.0V;Ipeak 250A;Vvar 16V at 1mA max;V clamp 34V at Ip 5A
12▼	V12SM8(A)	6		M1364	Vrms 6.0V;Ipeak 250A;Vvar 16V at 1mA max;Vclamp 34V at Ip 5A
13▼	V18CH8(A)	6		M1362	Vrms 10V;Ipeak 250A;Vvar 21.6at 1mA max;V clamp 42V at Ip 5A
14▼	V18SM8(A)	6		M1364	Vrms 10V;Ipeak 250A;Vvar 21.6V at 1mA max;Vclamp 42V at Ip 5A
15▼	V18SM16(A)	6		M1364a	Vrms 10V;Ipeak 1.0kA;Vvar 21.6V at 1mA max;Vclamp 39V at Ip 10A
16▼	V22CH8(A)	6		M1362	Vrms 14V;Ipeak 250A;Vvar 26at 1mA max;V clamp 47V at Ip 5A
17▼	V22SM8(A)	6		M1364	Vrms 14V;Ipeak 250A;Vvar 26V at 1mA max;Vclamp 47V at Ip 5A
18▼	V22SM16(A)	6		M1364a	Vrms 14V;Ipeak 1.0kA;Vvar 26V at 1mA max;Vclamp 43V at Ip 10A
19▼	V27CH8(A)	6		M1362	Vrms 17V;Ipeak 250A;Vvar 31.1Vat 1mA max;Vclamp 57V at Ip 5A
20▼	V27SM8(A)	6		M1364	Vrms 17V;Ipeak 250A;Vvar 31.1V at 1mA max;Vclamp 57V at Ip 5A
21▼	V27SM16(A)	6		M1364a	Vrms 17V;Ipeak 1.0kA;Vvar 31.1V at 1mA max;Vclamp 53V at Ip 10A
22▼	V33CH8(A)	6		M1362	Vrms 20V;Ipeak 250A;Vvar 36.5Vat 1mA max;Vclamp 68V at Ip 5A
23▼	V33SM8(A)	6		M1364	Vrms 20V;Ipeak 250A;Vvar 36.5V at 1mA max;Vclamp 68V at Ip 5A
24▼	V33SM16(A)	6		M1364a	Vrms 20V;Ipeak 1.0kA;Vvar 36.5V at 1mA max;Vclamp 64V at Ip 10A
25▼	V39CH8(A)	6		M1362	Vrms 25V;Ipeak 250A;Vvar 43Vat 1mA max;Vclamp 79V at Ip 5A
26▼	V39CP20(A)	6		M1363b	Vrms 25V;Ipeak 300A;Vvar 43V at 1mA max;Vclamp 85V at Ip 10A
27▼	V39SM8(A)	6		M1364	Vrms 25V;Ipeak 250A;Vvar 43V at 1mA max;Vclamp 79V at Ip 5A
28▼	V39SM16(A)	6		M1364a	Vrms 25V;Ipeak 1.0kA;Vvar 43V at 1mA max;Vclamp 76V at Ip 10A
29▼	V47CH8(A)	6		M1362	Vrms 30V;Ipeak 250A;Vvar 52Vat 1mA max;Vclamp 92V at Ip 5A
30▼	V47CP20(A)	6		M1363b	Vrms 30V;Ipeak 300A;Vvar 52V at 1mA max;Vclamp 100V at Ip 10A
31▼	V47SM8(A)	6		M1364	Vrms 30V;Ipeak 250A;Vvar 52V at 1mA max;Vclamp 92V at Ip 5A
32▼	V47SM16(A)	6		M1364a	Vrms 30V;Ipeak 1.0kA;Vvar 52V at 1mA max;Vclamp 89V at Ip 10A
33▼	V56CH8(A)	6		M1362	Vrms 35V;Ipeak 250A;Vvar 62Vat 1mA max;Vclamp 107 at Ip 5A
34▼	V56SM8(A)	6		M1364	Vrms 35V;Ipeak 250A;Vvar 62V at 1mA max;Vclamp 107V at Ip 5A
35▼	V56SM16(A)	6		M1364a	Vrms 35V;Ipeak 1.0kA;Vvar 62V at 1mA max;Vclamp 103V at Ip 10A
36▼	V68CH8(A)	6		M1362	Vrms 40V;Ipeak 250A;Vvar 75Vat 1mA max;Vclamp 127 at Ip 5A
37▼	V68SM8(A)	6		M1364	Vrms 40V;Ipeak 250A;Vvar 75V at 1mA max;Vclamp 127V at Ip 5A
38▼	V68SM16(A)	6		M1364a	Vrms 40V;Ipeak 1.0kA;Vvar 75V at 1mA max;Vclamp 123V at Ip 10A
39▼	V82CH8(A)	6		M1362	Vrms 50V;Ipeak 1.2kA;Vvar 91Vat 1mA max;Vclamp 135 at Ip 10A
40▼	V82SM8(A)	6		M1364	Vrms 50V;Ipeak 250A;Vvar 91V at 1mA max;Vclamp 145V at Ip 10A
41▼	V82SM16(A)	6		M1364a	Vrms 50V;Ipeak 1.0kA;Vvar 90V at 1mA max;Vclamp 150V at Ip 50A
42▼	V100CH8(A)	6		M1362	Vrms 60V;Ipeak 1.2kA;Vvar 110V at 1mA max;Vclamp 165V at Ip 10A
43▼	V100SM8(A)	6		M1364	Vrms 60V;Ipeak 250A;Vvar 110V at 1mA max;Vclamp 170V at Ip 10A
44▼	V100SM16(A)	6		M1364a	Vrms 60V;Ipeak 1.0kA;Vvar 110V at 1mA max;Vclamp 175V at Ip 50A
45▼	V120CH8(A)	6		M1362	Vrms 75V;Ipeak 1.2kA;Vvar 132V at 1mA max;Vclamp 200V at Ip 10A
46▼	V120SM8(A)	6		M1364	Vrms 75V;Ipeak 1.2kA;Vvar 132V at 1mA max;Vclamp 205V at Ip 10A
47▼	V120SM16(A)	6		M1364a	Vrms 75V;Ipeak 4.5kA;Vvar 132V at 1mA max;Vclamp 210V at Ip 50A
48▼	V150CH8(A)	6		M1362	Vrms 95V;Ipeak 1.2kA;Vvar 165V at 1mA max;Vclamp 250V at Ip 10A
49▼	V150SM8(A)	6		M1364	Vrms 95V;Ipeak 1.2kA;Vvar 165V at 1mA max;Vclamp 250V at Ip 10A
50▼	V150SM16(A)	6		M1364a	Vrms 95V;Ipeak 4.5kA;Vvar 165V at 1mA max;Vclamp 255V at Ip 50A
51▼	V180CH8(A)	6		M1362	Vrms 115V;Ipeak 1.2kA;Vvar 198V at 1mA max;Vclamp 295V at Ip 10A
52▼	V180SM8(A)	6		M1364	Vrms 115V;Ipeak 1.2kA;Vvar 198V at 1mA max;Vclamp 295V at Ip 10A
53▼	V180SM16(A)	6		M1364a	Vrms 115V;Ipeak 4.5kA;Vvar 198V at 1mA max;Vclamp 300V at Ip 50A
54▼	V200CH8(A)	6		M1362	Vrms 130V;Ipeak 1.2kA;Vvar 228V at 1mA max;Vclamp 340V at Ip 10A
55▼	V200CP20(A)	6		M1363a	Vrms 130V;Ipeak 500A;Vvar 228V at 1mA max;Vclamp 400V at Ip 10A
56▼	V200SM8(A)	6		M1364	Vrms 130V;Ipeak 1.2kA;Vvar 228V at 1mA max;Vclamp 340V at Ip 10A
57▼	V200SM16(A)	6		M1364a	Vrms 130V;Ipeak 4.5kA;Vvar 228V at 1mA max;Vclamp 340V at Ip 50A
58▼	V220SM8(A)	6		M1364	Vrms 140V;Ipeak 1.2kA;Vvar 242V at 1mA max;Vclamp 360V at Ip 10A
59▼	V220SM16(A)	6		M1364a	Vrms 140V;Ipeak 4.5kA;Vvar 242V at 1mA max;Vclamp 360V at Ip 50A
60▼	V240CH8(A)	6		M1362	Vrms 150V;Ipeak 1.2kA;Vvar 268V at 1mA max;Vclamp 360V at Ip 10A
61▼	V240CP20(A)	6		M1363a	Vrms 150V;Ipeak 500A;Vvar 268V at 1mA max;Vclamp 470V at Ip 10A
62▼	V240SM8(A)	6		M1364	Vrms 150V;Ipeak 1.2kA;Vvar 268V at 1mA max;Vclamp 395V at Ip 10A
63▼	V240SM16(A)	6		M1364a	Vrms 150V;Ipeak 4.5kA;Vvar 268V at 1mA max;Vclamp 395V at Ip 50A
64▼	V270SM8(A)	6		M1364	Vrms 175V;Ipeak 1.2kA;Vvar 303V at 1mA max;Vclamp 455V at Ip 10A
65▼	V270SM16(A)	6		M1364a	Vrms 175V;Ipeak 4.5kA;Vvar 303V at 1mA max;Vclamp 455V at Ip 50A
66▼	V302CA42(A)	6			Disc;43.5mmx 36mm Wide;Vrms 2.5kV;Ipeak 65kA;Vvar 5.9kVdc at 1mA max
67▼	V360CH8(A)	6		M1362	Vrms 230V;Ipeak 1.2kA;Vvar 396V at 1mA max;Vclamp 595V at Ip 10A
68▼	V360SM8(A)	6		M1364	Vrms 230V;Ipeak 1.2kA;Vvar 396V at 1mA max;Vclamp 595V at Ip 10A
69▼	V360SM16(A)	6		M1364a	Vrms 230V;Ipeak 4.5kA;Vvar 396V at 1mA max;Vclamp 595V at Ip 50A
70▼	V390CH8(A)	6		M1362	Vrms 250V;Ipeak 1.2kA;Vvar 429V at 1mA max;Vclamp 650V at Ip 10A
71▼	V390SM8(A)	6		M1364	Vrms 250V;Ipeak 1.2kA;Vvar 429V at 1mA max;Vclamp 650V at Ip 10A
72▼	V390SM16(A)	6		M1364a	Vrms 250V;Ipeak 4.5kA;Vvar 429V at 1mA max;Vclamp 650V at Ip 50A
73▼	V430CH8(A)	6		M1362	Vrms 275V;Ipeak 1.2kA;Vvar 473V at 1mA max;Vclamp 710V at Ip 10A
74▼	V430SM8(A)	6		M1364	Vrms 275V;Ipeak 1.2kA;Vvar 473V at 1mA max;Vclamp 710V at Ip 10A
75▼	V430SM16(A)	6		M1364a	Vrms 275V;Ipeak 4.5kA;Vvar 473V at 1mA max;Vclamp 710V at Ip 50A
76	ZAG100A1	6	Δ	A313d	Suppression Diode;Vr 100V;VAVL 230-415V at IR 1.0mA
77	ZAG100A2	6	Δ	A313d	Suppression Diode;Vr 200V;VAVL 280-505V at IR 1.0mA
78	ZAG100A3	6	Δ	A313d	Suppression Diode;Vr 300V;VAVL 375-725V at IR 1.0mA
79	ZAG100A4	6	Δ	A313d	Suppression Diode;Vr 400V;VAVL 465-805V at IR 1.0mA
80	ZAG100A05	6	Δ	A313d	Suppression Diode;Vr 50V;VAVL 145-275V at IR 1.0mA
81	ZZ16	6		DO13	Vz 13V at Iz 5mA;VR 10V at IR 5uA;Ctot 1800pF at VR equal 0V,Freq 1.0MHz
82	ZZ36	6		DO13	Vz 29.6V at Iz 5mA;VR 25V at IR 5uA;Ctot 700pF at VR equal 0V,Freq 1.0MHz
83	ZZ62	6		DO13	Vz 50V at Iz 5mA;VR 42V at IR 5uA;Ctot 450pF at VR equal 0V,Freq 1.0MHz
84	ZZ160	6		DO13	Vz 130V at Iz 5mA;VR 110V at IR 5uA;Ctot 200pF at VR equal 0V,Freq 1.0MHz
85	ZZY16	6		DO13	Vz 13V at Iz 5mA;VR 10V at IR 5uA;Ctot 1200pF at VR equal 0V,Freq 1.0MHz
86	ZZY36	6		DO13	Vz 29.6V at Iz 5mA;VR 25V at IR 5uA;Ctot 500pF at VR equal 0V,Freq 1.0MHz
87	ZZY62	6		DO13	Vz 50V at Iz 5mA;VR 42V at IR 5uA;Ctot 300pF at VR equal 0V,Freq 1.0MHz
88	ZZY160	6		DO13	Vz 130V at Iz 5mA;VR 110V at IR 5uA;Ctot 150pF at VR equal 0V,Freq 1.0MHz
89	1N4632A	6	Si	A398f	Transient Voltage Suppressor;VBR -60-66V;IRM 5.0uA max
90	1N4633A	6	Si	A398f	Transient Voltage Suppressor;VBR -64-71V;IRM 5.0uA max
91	1N4634A	6	Si	A398f	Transient Voltage Suppressor;VBR -66-73V;IRM 5.0uA max
92	1N4635A	6	Si	A398f	Transient Voltage Suppressor;VBR -71-78V;IRM 5.0uA max
93	1N4636A	6	Si	A398f	Transient Voltage Suppressor;VBR -77-86V;IRM 5.0uA max
94	1N4637A	6	Si	A398f	Transient Voltage Suppressor;VBR -88-92V;IRM 5.0uA max
95	1N5629	6	Si	DO13	PP 1.5kW;Pd 1.0W;VR(wkg)5.50V;IR(surge) max 139A;IR max 1.0m.
96	1N5629A	6	Si	DO13	PP 1.5kW;Pd 1.0W;VR(wkg)5.80V;IR(surge) max 143A;IR max 1.0m.
97	1N5630	6	Si	DO13	PP 1.5kW;Pd 1.0W;VR(wkg)6.05V;IR(surge) max 128A;IR max 500u.
98	1N5630A	6	Si	DO13	PP 1.5kW;Pd 1.0W;VR(wkg) 6.40V;IR(surge)max 132A;IR max 500u.
99	1N5631	6	Si	DO13	PP 1.5kW;Pd 1.0W;VR(wkg) 6.63V;IR(surge)max 120A;IR max 200u.
100	1N5631A	6	Si	DO13	PP 1.5kW;Pd 1.0W;VR(wkg) 7.02V;IR(surge)max 124A;IR max 200u.
101	1N5632	6	Si	DO13	PP 1.5kW;Pd 1.0W;VR(wkg) 7.37V;IR(surge)max 109A;IR max 50u.
102	1N5632A	6	Si	DO13	PP 1.5kW;Pd 1.0W;VR(wkg) 7.78V;IR(surge)max 112A;IR max 50u.
103	1N5633	6	Si	DO13	PP 1.5kW;Pd 1.0W;VR(wkg) 8.10V;IR(surge)max 100A;IR max 10u.
104	1N5633A	6	Si	DO13	PP 1.5kW;Pd 1.0W;VR(wkg) 8.55V;IR(surge)max 103A;IR max 10u.
105	1N5634	6	Si	DO13	PP 1.5kW;Pd 1.0W;VR(wkg) 8.92V;IR(surge)max 93A;IR max 5.0u.
106	1N5634A	6	Si	DO13	PP 1.5kW;Pd 1.0W;VR(wkg) 9.40V;IR(surge)max 96A;IR max 5.0u.
107	1N5635	6	Si	DO13	PP 1.5kW;Pd 1.0W;VRM(wkg)9.72V;IR(Surge)max 87A;IR max 5.0uA
108	1N5635A	6	Si	DO13	PP 1.5kW;Pd 1.0W;VRM(wkg)10.2V;IR(Surge)max 90A;IR max 5.0uA
109	1N5636	6	Si	DO13	PP 1.5kW;Pd 1.0W;VRM(wkg)10.5V;IR(Surge)max 79A;IR max 5.0uA
110	1N5636A	6	Si	DO13	PP 1.5kW;Pd 1.0W;VRM(wkg)11.1V;IR(Surge)max 82A;IR max 5.0uA

7. TRANSIENT SUPPRESSOR DIODES - Bipolar & Unipolar Types (Cont'd)

IN ORDER OF (1) TYPE (2) MAT AND (3) TYPE NO.

LINE No.	3 TYPE NUMBER	1 TYPE	2 MAT.	DWG. NO.	DESCRIPTION
1	1N5637	6	Si	DO13	PP 1.5kW;Pd 1.0W;VR(wkg) 12.1V;IR(surge)max 68A;IR max 5.0uA.
2	1N5637A	6	Si	DO13	PP 1.5kW;Pd 1.0W;VR(wkg) 12.8V;IR(surge)max 71A;IR max 5.0uA.
3	1N5638	6	Si	DO13	PP 1.5kW;Pd 1.0W;VR(wkg) 12.9V;IR(surge)max 64A;IR max 5.0uA.
4	1N5638A	6	Si	DO13	PP 1.5kW;Pd 1.0W;VR(wkg) 13.6V;IR(surge)max 67A;IR max 5.0uA.
5	1N5639	6	Si	DO13	PP 1.5kW;Pd 1.0W;VR(wkg) 14.5V;IR(surge)max 56.5A;IR max 5.0uA.
6	1N5639A	6	Si	DO13	PP 1.5kW;Pd 1.0W;VR(wkg) 15.3V;IR(surge)max 59.5A;IR max 5.0uA.
7	1N5640	6	Si	DO13	PP 1.5kW;Pd 1.0W;VR(wkg) 16.2V;IR(surge)max 51.5A;IR max 5.0uA.
8	1N5640A	6	Si	DO13	PP 1.5kW;Pd 1.0W;VR(wkg) 17.1V;IR(surge)max 54A;IR max 5.0uA.
9	1N5641	6	Si	DO13	PP 1.5kW;Pd 1.0W;VR(wkg) 17.8V;IR(surge)max 47A;IR max 5.0uA.
10	1N5641A	6	Si	DO13	PP 1.5kW;Pd 1.0W;VR(wkg) 18.8V;IR(surge)max 49A;IR max 5.0uA.
11	1N5642	6	Si	DO13	PP 1.5kW;Pd 1.0W;VR(wkg) 19.4V;IR(surge)max 43A;IR max 5.0uA.
12	1N5642A	6	Si	DO13	PP 1.5kW;Pd 1.0W;VR(wkg) 20.5V;IR(surge)max 45A;IR max 5.0uA.
13	1N5643	6	Si	DO13	PP 1.5kW;Pd 1.0W;VR(wkg) 21.8V;IR(surge)max 38.5A;IR max 5.0uA.
14	1N5643A	6	Si	DO13	PP 1.5kW;Pd 1.0W;VR(wkg) 23.1V;IR(surge)max 40A;IR max 5.0uA.
15	1N5644	6	Si	DO13	PP 1.5kW;Pd 1.0W;VR(wkg) 24.3V;IR(surge)max 34.5A;IR max 5.0uA.
16	1N5644A	6	Si	DO13	PP 1.5kW;Pd 1.0W;VR(wkg) 25.6V;IR(surge)max 36A;IR max 5.0uA.
17	1N5645	6	Si	DO13	PP 1.5kW;Pd 1.0W;VR(wkg) 26.8V;IR(surge)max 31.5A;IR max 5.0uA.
18	1N5645A	6	Si	DO13	PP 1.5kW;Pd 1.0W;VR(wkg) 28.2V;IR(surge)max 33A;IR max 5.0uA.
19	1N5646	6	Si	DO13	PP 1.5kW;Pd 1.0W;VR(wkg) 29.1V;IR(surge)max 29A;IR max 5.0uA.
20	1N5646A	6	Si	DO13	PP 1.5kW;Pd 1.0W;VR(wkg) 30.8V;IR(surge)max 30A;IR max 5.0uA.
21	1N5647	6	Si	DO13	PP 1.5kW;Pd 1.0W;VR(wkg) 31.6V;IR(surge)max 26.5A;IR max 5.0uA.
22	1N5647A	6	Si	DO13	PP 1.5kW;Pd 1.0W;VR(wkg) 33.3V;IR(surge)max 28A;IR max 5.0uA.
23	1N5648	6	Si	DO13	PP 1.5kW;Pd 1.0W;VR(wkg) 34.8V;IR(surge)max 24A;IR max 5.0uA.
24	1N5648A	6	Si	DO13	PP 1.5kW;Pd 1.0W;VR(wkg) 36.8V;IR(surge)max 25.3A;IR max 5.0uA.
25	1N5649	6	Si	DO13	PP 1.5kW;Pd 1.0W;VR(wkg) 38.1V;IR(surge)max 22.2A;IR max 5.0uA.
26	1N5649A	6	Si	DO13	PP 1.5kW;Pd 1.0W;VR(wkg) 40.2V;IR(surge)max 23.2A;IR max 5.0uA.
27	1N5650	6	Si	DO13	PP 1.5kW;Pd 1.0W;VR(wkg) 41.3V;IR(surge)max 20.4A;IR max 5.0uA.
28	1N5650A	6	Si	DO13	PP 1.5kW;Pd 1.0W;VR(wkg) 43.6V;IR(surge)max 21.4A;IR max 5.0uA.
29	1N5651	6	Si	DO13	PP 1.5kW;Pd 1.0W;VR(wkg) 45.4V;IR(surge)max 18.6A;IR max 5.0uA.
30	1N5651A	6	Si	DO13	PP 1.5kW;Pd 1.0W;VR(wkg) 47.8V;IR(surge)max 19.5A;IR max 5.0uA.
31	1N5652	6	Si	DO13	PP 1.5kW;Pd 1.0W;VR(wkg) 50.2V;IR(surge)max 16.9A;IR max 5.0uA.
32	1N5652A	6	Si	DO13	PP 1.5kW;Pd 1.0W;VR(wkg) 53.0V;IR(surge)max 17.7A;IR max 5.0uA.
33	1N5653	6	Si	DO13	PP 1.5kW;Pd 1.0W;VR(wkg) 55.1V;IR(surge)max 15.3A;IR max 5.0uA.
34	1N5653A	6	Si	DO13	PP 1.5kW;Pd 1.0W;VR(wkg) 58.1V;IR(surge)max 16.3A;IR max 5.0uA.
35	1N5654	6	Si	DO13	PP 1.5kW;Pd 1.0W;VR(wkg) 60.7V;IR(surge)max 13.9A;IR max 5.0uA.
36	1N5654A	6	Si	DO13	PP 1.5kW;Pd 1.0W;VR(wkg) 64.1V;IR(surge)max 14.6A;IR max 5.0uA.
37	1N5655	6	Si	DO13	PP 1.5kW;Pd 1.0W;VR(wkg) 66.4V;IR(surge)max 12.7A;IR max 5.0uA.
38	1N5655A	6	Si	DO13	PP 1.5kW;Pd 1.0W;VR(wkg) 70.1V;IR(surge)max 13.3A;IR max 5.0uA.
39	1N5656	6	Si	DO13	PP 1.5kW;Pd 1.0W;VR(wkg) 73.7V;IR(surge)max 11.4A;IR max 5.0uA.
40	1N5656A	6	Si	DO13	PP 1.5kW;Pd 1.0W;VR(wkg) 77.8V;IR(surge)max 12.0A;IR max 5.0uA.
41	1N5657	6	Si	DO13	PP 1.5kW;Pd 1.0W;VR(wkg) 81.0V;IR(surge)max 10.4A;IR max 5.0uA.
42	1N5657A	6	Si	DO13	PP 1.5kW;Pd 1.0W;VR(wkg) 85.5V;IR(surge)max 11.0A;IR max 5.0uA.
43	1N5658	6	Si	DO13	PP 1.5kW;Pd 1.0W;VR(wkg) 89.2V;IR(surge)max 9.5A;IR max 5.0uA.
44	1N5658A	6	Si	DO13	PP 1.5kW;Pd 1.0W;VR(wkg) 94.0V;IR(surge)max 9.9A;IR max 5.0uA.
45	1N5659	6	Si	DO13	PP 1.5kW;Pd 1.0W;VR(wkg) 97.2V;IR(surge)max 8.7A;IR max 5.0uA.
46	1N5659A	6	Si	DO13	PP 1.5kW;Pd 1.0W;VR(wkg) 102V;IR(surge)max 9.1A;IR max 5.0uA.
47	1N5660	6	Si	DO13	PP 1.5kW;Pd 1.0W;VR(wkg) 105V;IR(surge)max 8.0A;IR max 5.0uA.
48	1N5660A	6	Si	DO13	PP 1.5kW;Pd 1.0W;VR(wkg) 111V;IR(surge)max 8.4A;IR max 5.0uA.
49	1N5661	6	Si	DO13	PP 1.5kW;Pd 1.0W;VR(wkg) 121V;IR(surge)max 7.0A;IR max 5.0uA.
50	1N5661A	6	Si	DO13	PP 1.5kW;Pd 1.0W;VR(wkg) 128V;IR(surge)max 7.2A;IR max 5.0uA.
51	1N5662	6	Si	DO13	PP 1.5kW;Pd 1.0W;VR(wkg) 130V;IR(surge)max 6.5A;IR max 5.0uA.
52	1N5662A	6	Si	DO13	PP 1.5kW;Pd 1.0W;VR(wkg) 136V;IR(surge)max 6.8A;IR max 5.0uA.
53	1N5663	6	Si	DO13	PP 1.5kW;Pd 1.0W;VR(wkg) 138V;IR(surge)max 6.2A;IR max 5.0uA.
54	1N5663A	6	Si	DO13	PP 1.5kW;Pd 1.0W;VR(wkg) 145V;IR(surge)max 6.4A;IR max 5.0uA.
55	1N5664	6	Si	DO13	PP 1.5kW;Pd 1.0W;VR(wkg) 146V;IR(surge)max 5.8A;IR max 5.0uA.
56	1N5664A	6	Si	DO13	PP 1.5kW;Pd 1.0W;VR(wkg) 154V;IR(surge)max 6.1A;IR max 5.0uA.
57	1N5665	6	Si	DO13	PP 1.5kW;Pd 1.0W;VR(wkg) 162V;IR(surge)max 5.2A;IR max 5.0uA.
58	1N5665A	6	Si	DO13	PP 1.5kW;Pd 1.0W;VR(wkg) 171V;IR(surge)max 5.5A;IR max 5.0uA.
59	1N5907	6	Si	DO13	PP 1.5kW;Pd 1.0W;VR(wkg)5.0V;IR(surge)max 165A;IR max 146mA.
60	1N5908	6	Si	A1xa	PP 1.5kW;Pd 5.0W;VR(wkg)5.0V;IR(surge)max 165A;IR max 700mA.
61	1N6036	6	Si	DO13	BV 6.75-8.25Vdc at IR 10mA;VRWM 5.5V;IR 1mA;ISurge 128A max.
62	1N6036A	6	Si	DO13	BV 7.13-7.88Vdc at IR 10mA;VRWM 6.0V;IR 1mA;ISurge 132A max.
63	1N6037	6	Si	DO13	BV 7.38-9.02Vdc at IR 10mA;VRWM 6.5V;IR 500uA;ISurge 120A max.
64	1N6037A	6	Si	DO13	BV 7.79-8.61Vdc at IR 10mA;VRWM 7.0V;IR 500uA;ISurge 124A max.
65	1N6038	6	Si	DO13	BV 8.19-10Vdc at IR 10mA;VRWM 7.0V;IR 200uA;ISurge 109A max.
66	1N6038A	6	Si	DO13	BV 8.65-9.55Vdc at IR 10mA;VRWM 7.5V;IR 200uA;ISurge 112A max.
67	1N6039	6	Si	DO13	BV 9.0-11Vdc at IR 1.0mA;VRWM 8.0V;IR 50uA;ISurge 100A max.
68	1N6039A	6	Si	DO13	BV 9.5-10.5Vdc at IR 1.0mA;VRWM 8.0V;IR 50uA;ISurge 103A max.
69	1N6040	6	Si	DO13	BV 9.9-12.1Vdc at IR 1.0mA;VRWM 8.5V;IR 10uA;ISurge 93A max.
70	1N6040A	6	Si	DO13	BV 10.5-11.6Vdc at IR 1.0mA;VRWM 9.0V;IR 10uA;ISurge 96A max.
71	1N6041	6	Si	DO13	BV 10.8-13.2Vdc at IR 1.0mA;VRWM 9.0V;IR 5uA;ISurge 87A max.
72	1N6041A	6	Si	DO13	BV 11.4-12.6Vdc at IR 1.0mA;VRWM 10V;IR 5uA;ISurge 90A max.
73	1N6042	6	Si	DO13	BV 11.7-14.3Vdc at IR 1mA;VRWM 10V;IR 5uA;ISurge 79A max.
74	1N6042A	6	Si	DO13	BV 12.4-13.7Vdc at IR 1mA;VRWM 11V;IR 5uA;ISurge 82A max.
75	1N6043	6	Si	DO13	BV 13.5-16.7Vdc at IR 1mA;VRWM 11V;IR 5uA;ISurge 68A max.
76	1N6043A	6	Si	DO13	BV 14.3-15.8Vdc at IR 1mA;VRWM 12V;IR 5uA;ISurge 71A max.
77	1N6044	6	Si	DO13	BV 14.4-17.6Vdc at IR 1mA;VRWM 12V;IR 5uA;ISurge 64A max.
78	1N6044A	6	Si	DO13	BV 15.2-16.8Vdc at IR 1mA;VRWM 13V;IR 5uA;ISurge 67A max.
79	1N6045	6	Si	DO13	BV 16.2-19.8Vdc at IR 1mA;VRWM 14V;IR 5uA;ISurge 56.5A max.
80	1N6045A	6	Si	DO13	BV 17.1-18.9Vdc at IR 1mA;VRWM 15V;IR 5uA;ISurge 59.5A max.
81	1N6046	6	Si	DO13	BV 18-22Vdc at IR 1mA;VRWM 16V;IR 5uA;ISurge 51.5A max.
82	1N6046A	6	Si	DO13	VNom 20V;VRM 16V;IR 5.0uA;Surge I 54A max
83	1N6047	6	Si	DO13	BV 19.8-24.2Vdc at IR 1mA;VRWM 17V;IR 5uA;ISurge 47A max.
84	1N6047A	6	Si	DO13	BV 20.9-23.1Vdc at IR 1mA;VRWM 18V;IR 5uA;ISurge 49A max.
85	1N6048	6	Si	DO13	BV 21.9-26.4Vdc at IR 1mA;VRWM 19V;IR 5uA;ISurge 43A max.
86	1N6048A	6	Si	DO13	BV 22.8-25.2Vdc at IR 1mA;VRWM 20V;IR 5uA;ISurge 45A max.
87	1N6049	6	Si	DO13	BV 24.3-29.7Vdc at IR 1mA;VRWM 21V;IR 5uA;ISurge 38.5A max.
88	1N6049A	6	Si	DO13	BV 25.7-28.4Vdc at IR 1mA;VRWM 22V;IR 5uA;ISurge 40A max.
89	1N6050	6	Si	DO13	BV 27-33Vdc at IR 1mA;VRWM 24V;IR 5uA;ISurge 34.5A max.
90	1N6050A	6	Si	DO13	BV 28.5-31.5Vdc at IR 1mA;VRWM 25V;IR 5uA;ISurge 36A max.
91	1N6051	6	Si	DO13	BV 29.7-36.3Vdc at IR 1mA;VRWM 26V;IR 5uA;ISurge 31.5A max.
92	1N6051A	6	Si	DO13	BV 31.4-34.7Vdc at IR 1mA;VRWM 28V;IR 5uA;ISurge 33A max.
93	1N6052	6	Si	DO13	BV 32.4-39.6Vdc at IR 1mA;VRWM 29VV;IR 5uA;ISurge 29A max.
94	1N6052A	6	Si	DO13	BV 34.2-37.8Vdc at IR 1mA;VRWM 30V;IR 5uA;ISurge 30A max.
95	1N6053	6	Si	DO13	BV 35.1-42.9Vdc at IR 1mA;VRWM 31V;IR 5uA;ISurge 26.5A max.
96	1N6053A	6	Si	DO13	BV 37.1-41Vdc at IR 1mA;VRWM 33V;IR 5uA;ISurge 28A max.
97	1N6054	6	Si	DO13	BV 38.7-47.3Vdc at IR 1mA;VRWM 34V;IR 5uA;ISurge 24A max.
98	1N6054A	6	Si	DO13	BV 40.9-45.2Vdc at IR 1mA;VRWM 36V;IR 5uA;ISurge 25.3A max.
99	1N6055	6	Si	DO13	BV 42.3-51.7Vdc at IR 1mA;VRWM 38V;IR 5uA;ISurge 22.2A max.
100	1N6055A	6	Si	DO13	BV 44.7-49.4Vdc at IR 1mA;VRWM 40V;IR 5uA;ISurge 23.2A max.
101	1N6056	6	Si	DO13	BV 45.9-56.1Vdc at IR 1mA;VRWM 41V;IR 5uA;ISurge 20.4A max.
102	1N6056A	6	Si	DO13	BV 48.5-53.6Vdc at IR 1mA;VRWM 43V;IR 5uA;ISurge 21.4A max.
103	1N6057	6	Si	DO13	BV 50.4-61.6Vdc at IR 1mA;VRWM 45V;IR 5uA;ISurge 18.6A max.
104	1N6057A	6	Si	DO13	BV 53.2-58.8Vdc at IR 1mA;VRWM 47V;IR 5uA;ISurge 19.5A max.
105	1N6058	6	Si	DO13	BV 50.4-58.8Vdc at IR 1mA;VRWM 48V;IR 5uA;ISurge 16.9A max.
106	1N6058A	6	Si	DO13	BV 58.9-68.2Vdc at IR 1mA;VRWM 53V;IR 5uA;ISurge 17.7A max.
107	1N6059	6	Si	DO13	BV 61.2-74.8Vdc at IR 1mA;VRWM 55V;IR 5uA;ISurge 15.3A max.
108	1N6059A	6	Si	DO13	BV 64.6-71.4Vdc at IR 1mA;VRWM 58V;IR 5uA;ISurge 16.3A max.
109	1N6060	6	Si	DO13	BV 67.5-82.5Vdc at IR 1mA;VRWM 60V;IR 5uA;ISurge 13.9A max.
110	1N6060A	6	Si	DO13	BV 71.3-78.8Vdc at IR 1mA;VRWM 64V;IR 5uA;ISurge 14.6A max.

IN ORDER OF (1) TYPE (2) MAT AND (3) TYPE NO.

LINE No.	3 TYPE NUMBER	1 TYPE	2 MAT.	DWG. NO.	DESCRIPTION
1	1N6061	6	Si	DO13	BV 73.8-90.2Vdc at IR 1mA;VRWM 66V;IR 5uA;ISurge 12.7A max.
2	1N6061A	6	Si	DO13	BV 77.9-86.1Vdc at IR 1mA;VRWM 70V;IR 5uA;ISurge 13.3A max.
3	1N6062	6	Si	DO13	BV 81.9-100.1Vdc at IR 1mA;VRWM 73V;IR 5uA;ISurge 11.4A max.
4	1N6062A	6	Si	DO13	BV 86.5-95.5Vdc at IR 1mA;VRWM 75V;IR 5uA;ISurge 12A max.
5	1N6063	6	Si	DO13	BV 90-110Vdc at IR 1mA;VRWM 81V;IR 5uA;ISurge 10.4A max.
6	1N6063A	6	Si	DO13	BV 95-105Vdc at IR 1mA;VRWM 82V;IR 5uA;ISurge 11A max.
7	1N6064	6	Si	DO13	BV 99-121Vdc at IR 1mA;VRWM 90V;IR 5uA;ISurge 9.5A max.
8	1N6064A	6	Si	DO13	BV 105-116Vdc at IR 1mA;VRWM 94V;IR 5uA;ISurge 9.9A max.
9	1N6065	6	Si	DO13	BV 108-132Vdc at IR 1mA;VRWM 95V;IR 5uA;ISurge 8.5A max.
10	1N6065A	6	Si	DO13	BV 114-126Vdc at IR 1mA;VRWM 100V;IR 5uA;ISurge 8.9A max.
11	1N6066	6	Si	DO13	BV 117-143Vdc at IR 1mA;VRWM 105V;IR 5uA;ISurge 7.8A max.
12	1N6066A	6	Si	DO13	BV 124-137Vdc at IR 1mA;VRWM 110V;IR 5uA;ISurge 8.2A max.
13	1N6067	6	Si	DO13	BV 135-165Vdc at IR 1mA;VRWM 121V;IR 5uA;ISurge 6.7A max.
14	1N6067A	6	Si	DO13	BV 143-158Vdc at IR 1mA;VRWM 128V;IR 5uA;ISurge 7.0A max.
15	1N6068	6	Si	DO13	BV 153-187Vdc at IR 1mA;VRWM 137V;IR 5uA;ISurge 5.8A max.
16	1N6068A	6	Si	DO13	BV 162-179Vdc at IR 1mA;VRWM 145V;IR 5uA;ISurge 6.1A max.
17	1N6069	6	Si	DO13	BV 162-198Vdc at IR 1mA;VRWM 145V;IR 5uA;ISurge 5.5A max.
18	1N6069A	6	Si	DO13	BV 171-189Vdc at IR 1mA;VRWM 150V;IR 5uA;ISurge 5.7A max.
19	1N6070	6	Si	DO13	BV 171-210Vdc at IR 1mA;VRWM 155V;IR 5uA;ISurge 5.1A max.
20	1N6070A	6	Si	DO13	BV 181-200Vdc at IR 1mA;VRWM 160V;IR 5uA;ISurge 5.4A max.
21	1N6071	6	Si	DO13	BV 180-220Vdc at IR 1mA;VRWM 165V;IR 5uA;ISurge 4.9A max.
22	1N6071A	6	Si	DO13	BV 190-210Vdc at IR 1mA;VRWM 170V;IR 5uA;ISurge 5.1A max.
23	1N6072	6	Si	DO13	BV 198-242Vdc at IR 1mA;VRWM 175V;IR 5uA;ISurge 4.3A max.
24	1N6072A	6	Si	DO13	BV 209-231Vdc at IR 1mA;VRWM 185V;IR 5uA;ISurge 4.6A max.
25	1N6102	6	Si	A69n	VBR 6.12-7.48Vdc;IT 175mAdc;IL 100uAdc;VSM 11Vpk;ISM 45.4Apk;TC 5;VM(wkg) 5.2Vdc
26	1N6102A	6	Si	A69n	VBR 6.46-7.14Vdc;IT 175mAdc;IL 100uAdc;VSM 10.5Vpk;ISM 47.6Apk;TC 5;VM(wkg) 5.2Vdc
27	1N6103	6	Si	A69n	VBR 6.75-825Vdc;IT 175mAdc;IL 50uAdc;VSM 11.8Vpk;ISM 42.4Apk;TC 6;VM(wkg) 5.7Vdc
28	1N6103A	6	Si	A69n	VBR 7.13-7.87Vdc;IT 175mAdc;IL 50uAdc;VSM 11.2Vpk;ISM 44.6Apk;TC 6;VM(wkg) 5.7Vdc
29	1N6104	6	Si	A69n	VBR 7.38-9.02Vdc;IT 150mAdc;IL 20uAdc;VSM 12.7Vpk;ISM 39.4Apk;TC 6;VM(wkg)6.2Vdc
30	1N6104A	6	Si	A69n	VBR 7.79-8.61Vdc;IT 150mAdc;IL 20uAdc;VSM 12.1Vpk;ISM 41.3Apk;TC 6;VM(wkg)6.2Vdc
31	1N6105	6	Si	A69n	VBR 8.19-10.01Vdc;IT 150mAdc;IL 20uAdc;VSM 14Vpk;ISM 35.7Apk;TC 6;VM(wkg)6.9Vdc
32	1N6105A	6	Si	A69n	VBR 8.65-9.55Vdc;IT 150mAdc;IL 20uAdc;VSM 13.4Vpk;ISM 37.3Apk;TC 6;VM(wkg)6.9Vdc
33	1N6106	6	Si	A69n	VBR 9.00-11Vdc;IT 125mAdc;IL 20uAdc;VSM 15.2Vpk;ISM 32.9Apk;TC 7;VM(wkg)7.6Vdc
34	1N6106A	6	Si	A69n	VBR 9.50-10.5Vdc;IT 125mAdc;IL 20uAdc;VSM 14.5Vpk;ISM 34.5Apk;TC 7;VM(wkg)7.6Vdc
35	1N6107	6	Si	A69n	VBR 9.90-12.1Vdc;IT 125mAdc;IL 20uAdc;VSM 16.3Vpk;ISM 30.7Apk;TC 7;VM(wkg)8.4Vdc
36	1N6107A	6	Si	A69n	VBR 10.45-11.55Vdc;IT 125mAdc;IL 20uAdc;VSM 15.6Vpk;ISM 32Apk;TC 7;VM(wkg)8.4Vdc
37	1N6108	6	Si	A69n	VBR 10.8-13.2Vdc;IT 100mAdc;IL 20uAdc;VSM 17.7Vpk;ISM 28.2Apk;TC 7;VM(wkg)9.1Vdc
38	1N6108A	6	Si	A69n	VBR 11.4-12.6Vdc;IT 100mAdc;IL 20uAdc;VSM 16.9Vpk;ISM 29.6Apk;TC 7;VM(wkg)9.1Vdc
39	1N6109	6	Si	A69n	VBR 11.7-14.3Vdc;IT 100mAdc;IL 20uAdc;VSM 19Vpk;ISM 26.3Apk;TC 8;VM(wkg)9.9Vdc
40	1N6109A	6	Si	A69n	VBR 12.35-13.65Vdc;IT 100mAdc;IL 20uAdc;VSM 18.2Vpk;ISM 27.5Apk;TC 8;VM(wkg)9.9Vdc
41	1N6110	6	Si	A69n	VBR 13.5-16.5Vdc;IT 75mAdc;IL 20uAdc;VSM 21.9Vpk;ISM 22.8Apk;TC 8;VM(wkg)11.4Vdc
42	1N6110A	6	Si	A69n	VBR 14.25-15.75Vdc;IT 75mAdc;IL 20uAdc;VSM 21Vpk;ISM 23.8Apk;TC 8;VM(wkg)11.4Vdc
43	1N6111	6	Si	A69n	VBR 14.4-17.6Vdc;IT 75mAdc;IL 20uAdc;VSM 23.4Vpk;ISM 21.4Apk;TC 8;VM(wkg)12.2Vdc
44	1N6111A	6	Si	A69n	VBR 15.2-16.8Vdc;IT 75mAdc;IL 20uAdc;VSM 22.3Vpk;ISM 22.4Apk;TC 8;VM(wkg)12.2Vdc
45	1N6112	6	Si	A69n	VBR 16.2-19.8Vdc;IT 65mAdc;IL 1uAdc;VSM 26.3Vpk;ISM 19Apk;TC 8.5;VM(wkg) 13.7Vdc
46	1N6112A	6	Si	A69n	VBR 17.1-18.9Vdc;IT 65mAdc;IL 1uAdc;VSM 25.1Vpk;ISM 19.9Apk;TC 8.5;VM(wkg) 13.7Vdc
47	1N6113	6	Si	A69n	VBR 18-22Vdc;IT 65mAdc;IL 1uAdc;VSM 29Vpk;ISM 17.2Apk;TC 8.5;VM(wkg) 15.2Vdc
48	1N6113A	6	Si	A69n	VBR 19-21Vdc;IT 65mAdc;IL 1uAdc;VSM 27.7Vpk;ISM 18Apk;TC 8.5;VM(wkg) 15.2Vdc
49	1N6114	6	Si	A69n	VBR 19.8-24.2Vdc;IT 50mAdc;IL 1uAdc;VSM 31.9Vpk;ISM 15.7Apk;TC 8.5;VM(wkg) 16.7Vdc
50	1N6114A	6	Si	A69n	VBR 20.9-23.1Vdc;IT 50mAdc;IL 1uAdc;VSM 30.5Vpk;ISM 16.4Apk;TC 8.5;VM(wkg) 16.7Vdc
51	1N6115	6	Si	A69n	VBR 21.6-26.4Vdc;IT 50mAdc;IL 1uAdc;VSM 34.8Vpk;ISM 14.4Apk;TC 9.0;VM(wkg) 18.2Vdc
52	1N6115A	6	Si	A69n	VBR 22.8-25.2Vdc;IT 50mAdc;IL 1uAdc;VSM 33.3Vpk;ISM 15Apk;TC 9.0;VM(wkg) 18.2Vdc
53	1N6116	6	Si	A69n	VBR 24.3-29.7Vdc;IT 50mAdc;IL 1uAdc;VSM 39.2Vpk;ISM 12.8Apk;TC 9.0;VM(wkg) 20.6Vdc
54	1N6116A	6	Si	A69n	VBR 25.7-28.3Vdc;IT 50mAdc;IL 1uAdc;VSM 37.4Vpk;ISM 13.4Apk;TC 9.0;VM(wkg) 20.6Vdc
55	1N6117	6	Si	A69n	VBR 27-33Vdc;IT 40mAdc;IL 1uAdc;VSM 43.6Vpk;ISM 11.5Apk;TC 9.0;VM(wkg) 22.8Vdc
56	1N6117A	6	Si	A69n	VBR 28.5-31.5Vdc;IT 40mAdc;IL 1uAdc;VSM 41.6Vpk;ISM 12Apk;TC 9.0;VM(wkg) 22.8Vdc
57	1N6118	6	Si	A69n	VBR 29.7-36.3Vdc;IT 40mAdc;IL 1uAdc;VSM 47.9Vpk;ISM 10.4Apk;TC 9.5;VM(wkg) 25.1Vdc
58	1N6118A	6	Si	A69n	VBR 31.4-34.6Vdc;IT 40mAdc;IL 1uAdc;VSM 45.7Vpk;ISM 10.9Apk;TC 9.5;VM(wkg) 25.1Vdc
59	1N6119	6	Si	A69n	VBR 32.4-39.6Vdc;IT 30mAdc;IL 1uAdc;VSM 52.3Vpk;ISM 9.6Apk;TC 9.5;VM(wkg)27.4Vdc
60	1N6119A	6	Si	A69n	VBR 34.2-37.8Vdc;IT 30mAdc;IL 1uAdc;VSM 49.9Vpk;ISM 10Apk;TC 9.5;VM(wkg) 27.4Vdc
61	1N6120	6	Si	A69n	VBR 35.1-42.9Vdc;IT 30mAdc;IL 1uAdc;VSM 56.2Vpk;ISM 8.9Apk;TC 9.5;VM(wkg) 29.7Vdc
62	1N6120A	6	Si	A69n	VBR 37.1-40.9Vdc;IT 30mAdc;IL 1uAdc;VSM 53.6Vpk;ISM 9.3Apk;TC 9.5;VM(wkg) 29.7Vdc
63	1N6121	6	Si	A69n	VBR 38.7-47.3Vdc;IT 30mAdc;IL 1uAdc;VSM 62Vpk;ISM 8.1Apk;TC 9.5;VM(wkg) 32.7Vdc
64	1N6121A	6	Si	A69n	VBR 40.9-45.1Vdc;IT 30mAdc;IL 1uAdc;VSM 59.1Vpk;ISM 8.5Apk;TC 9.5;VM(wkg) 32.7Vdc
65	1N6122	6	Si	A69n	VBR 42.3-51.7Vdc;IT 25mAdc;IL 1uAdc;VSM 67.7Vpk;ISM 7.4Apk;TC 9.5;VM(wkg) 35.8Vdc
66	1N6122A	6	Si	A69n	VBR 44.7-49.3Vdc;IT 25mAdc;IL 1uAdc;VSM 64.6Vpk;ISM 7.7Apk;TC 9.5;VM(wkg) 35.8Vdc
67	1N6123	6	Si	A69n	VBR 45.9-56.1Vdc;IT 25mAdc;IL 1uAdc;VSM 73.5Vpk;ISM 6.8Apk;TC 9.5;VM(wkg) 38.8Vdc
68	1N6123A	6	Si	A69n	VBR 48.5-53.5Vdc;IT 25mAdc;IL 1uAdc;VSM 70.1Vpk;ISM 7.1Apk;TC 9.5;VM(wkg) 38.8Vdc
69	1N6124	6	Si	A69n	VBR 50.4-61.6Vdc;IT 20mAdc;IL 1uAdc;VSM 80.7Vpk;ISM 6.2Apk;TC 9.5;VM(wkg) 42.6Vdc
70	1N6124A	6	Si	A69n	VBR 53.2-58.8Vdc;IT 20mAdc;IL 1uAdc;VSM 77Vpk;ISM 6.5Apk;TC 9.5;VM(wkg) 42.6Vdc
71	1N6125	6	Si	A69n	VBR 55.8-68.2Vdc;IT 20mAdc;IL 1uAdc;VSM 89.3Vpk;ISM 5.6Apk;TC 10;VM(wkg) 47.1Vdc
72	1N6125A	6	Si	A69n	VBR 58.9-65.1Vdc;IT 20mAdc;IL 1uAdc;VSM 85.3Vpk;ISM 5.9Apk;TC 10;VM(wkg) 47.1Vdc
73	1N6126	6	Si	A69n	VBR 61.2-74.8Vdc;IT 20mAdc;IL 1uAdc;VSM 98Vpk;ISM 5.1Apk;TC 10;VM(wkg) 51.7Vdc
74	1N6126A	6	Si	A69n	VBR 64.6-71.4Vdc;IT 20mAdc;IL 1uAdc;VSM 97.1Vpk;ISM 5.1Apk;TC 10;VM(wkg) 51.7Vdc
75	1N6127	6	Si	A69n	VBR 67.5-82.5Vdc;IT 20mAdc;IL 1uAdc;VSM 108.1Vpk;ISM 4.6Apk;TC 10;VM(wkg) 56Vdc
76	1N6127A	6	Si	A69n	VBR 71.3-78.7Vdc;IT 20mAdc;IL 1uAdc;VSM 103.1Vpk;ISM 4.8Apk;TC 10;VM(wkg) 56Vdc
77	1N6128	6	Si	A69n	VBR 73.8-90.2Vdc;IT 15mAdc;IL 1uAdc;VSM 118.2Vpk;ISM 4.2Apk;TC 10;VM(wkg) 62.2Vdc
78	1N6128A	6	Si	A69n	VBR 77.9-86.1Vdc;IT 15mAdc;IL 1uAdc;VSM 112.8Vpk;ISM 4.4Apk;TC 10;VM(wkg) 62.2Vdc
79	1N6129	6	Si	A69n	VBR 81.9-100.1Vdc;IT 15mAdc;IL 1uAdc;VSM 131.1Vpk;ISM 3.8Apk;TC 10;VM(wkg) 69.2Vdc
80	1N6129A	6	Si	A69n	VBR 86.5-95.5Vdc;IT 15mAdc;IL 1uAdc;VSM 125.1Vpk;ISM 4.0Apk;TC 10;VM(wkg) 69.2Vdc
81	1N6130	6	Si	A69n	VBR 90-110Vdc;IT 12mAdc;IL 1uAdc;VSM 144.1Vpk;ISM 3.5Apk;TC 10;VM(wkg) 76Vdc
82	1N6130A	6	Si	A69n	VBR 95-105Vdc;IT 12mAdc;IL 1uAdc;VSM 137.6Vpk;ISM 3.6Apk;TC 10;VM(wkg) 76Vdc
83	1N6131	6	Si	A69n	VBR 99-121Vdc;IT 12mAdc;IL 1uAdc;VSM 158.5Vpk;ISM 3.2Apk;TC 10;VM(wkg) 83.6Vdc
84	1N6131A	6	Si	A69n	VBR 104.5-115.5Vdc;IT 12mAdc;IL 1uAdc;VSM 151.3Vpk;ISM 3.3Apk;TC 10;VM(wkg) 83.6Vdc
85	1N6132	6	Si	A69n	VBR 108-132Vdc;IT 10mAdc;IL 1uAdc;VSM 172.9Vpk;ISM 2.9Apk;TC 10;VM(wkg) 91.2Vdc
86	1N6132A	6	Si	A69n	VBR 114-126Vdc;IT 10mAdc;IL 1uAdc;VSM 165.1Vpk;ISM 3.0Apk;TC 10;VM(wkg) 91.2Vdc
87	1N6133	6	Si	A69n	VBR 117-143Vdc;IT 10mAdc;IL 1uAdc;VSM 187.3Vpk;ISM 2.7Apk;TC 10.5;VM(wkg) 98.8Vdc
88	1N6133A	6	Si	A69n	VBR 123.5-136.5Vdc;IT 10mAdc;IL 1uAdc;VSM 178.8Vpk;ISM 2.8Apk;TC 10.5;VM(wkg) 98.8Vdc
89	1N6134	6	Si	A69n	VBR 135-165Vdc;IT 8mAdc;IL 1uAdc;VSM 216.2Vpk;ISM 2.3Apk;TC 10.5;VM(wkg)114Vdc
90	1N6134A	6	Si	A69n	VBR 142.5-157.5Vdc;IT 8mAdc;IL 1uAdc;VSM 206.3Vpk;ISM 2.4Apk;TC 10.5;VM(wkg)114Vdc
91	1N6135	6	Si	A69n	VBR 144-176Vdc;IT 8mAdc;IL 1uAdc;VSM 228.8Vpk;ISM 2.2Apk;TC 10.5;VM(wkg) 121.6Vdc
92	1N6135A	6	Si	A69n	VBR 152-168Vdc;IT 8mAdc;IL 1uAdc;VSM 218.4Vpk;ISM 2.3Apk;TC 10.5;VM(wkg) 121.6Vdc
93	1N6136	6	Si	A69n	VBR 162-198Vdc;IT 5mAdc;IL 1uAdc;VSM 257.4Vpk;ISM 1.9Apk;TC 11;VM(wkg) 136.8Vdc
94	1N6136A	6	Si	A69n	VBR 171-189Vdc;IT 5mAdc;IL 1uAdc;VSM 245.7Vpk;ISM 2.0Apk;TC 11;VM(wkg) 136.8Vdc
95	1N6137	6	Si	A69n	VBR 180-220Vdc;IT 5mAdc;IL 1uAdc;VSM 286Vpk;ISM 1.7Apk;TC 11;VM(wkg) 152Vdc
96	1N6137A	6	Si	A69n	VBR 190-210Vdc;IT 5mAdc;IL 1uAdc;VSM 273Vpk;ISM 1.8Apk;TC 11;VM(wkg) 152Vdc
97	1N6139	6	Si	A69p	VBR 6.75-8.25Vdc;IT 175mAdc;IL 300uAdc;VSM 11.8Vpk;ISM 127.1Apk;TC 6.0;VM(wkg) 5.7Vdc
98	1N6139A	6	Si	A69p	VBR 7.13-7.87Vdc;IT 175mAdc;IL 300uAdc;VSM 11.2Vpk;ISM 133.9Apk;TC 6.0;VM(wkg) 5.7Vdc
99	1N6140	6	Si	A69p	VBR 7.38-9.02Vdc;IT 150mAdc;IL 100uAdc;VSM 12.7Vpk;ISM 118.1Apk;TC 6.0;VM(wkg) 6.2Vdc
100	1N6140A	6	Si	A69p	VBR 7.79-8.61Vdc;IT 150mAdc;IL 100uAdc;VSM 12.1Vpk;ISM 124Apk;TC 6.0;VM(wkg) 6.2Vdc
101	1N6141	6	Si	A69p	VBR 8.19-10.01Vdc;IT 150mAdc;IL 100uAdc;VSM 14Vpk;ISM 107.1Apk;TC 6.0;VM(wkg) 6.9Vdc
102	1N6141A	6	Si	A69p	VBR 8.65-9.55Vdc;IT 150mAdc;IL 100uAdc;VSM 13.4Vpk;ISM 111.9Apk;TC 6.0;VM(wkg) 6.9Vdc
103	1N6142	6	Si	A69p	VBR 9-11Vdc;IT 125mAdc;IL 100uAdc;VSM 15.2Vpk;ISM 98.7Apk;TC 7.0;VM(wkg) 7.6Vdc
104	1N6142A	6	Si	A69p	VBR 9.5-10.5Vdc;IT 125mAdc;IL 100uAdc;VSM 14.5Vpk;ISM 103.4Apk;TC 7.0;VM(wkg) 7.6Vdc
105	1N6143	6	Si	A69p	VBR 9.9-12.1Vdc;IT 125mAdc;IL 20uAdc;VSM 16.3Vpk;ISM 92Apk;TC 7.0;VM(wkg)8.4Vdc
106	1N6143A	6	Si	A69p	VBR 10.45-11.55Vdc;IT 125mAdc;IL 20uAdc;VSM 15.6Vpk;ISM 96.2Apk;TC 7.0;VM(wkg)8.4Vdc
107	1N6144	6	Si	A69p	VBR 10.8-13.2Vdc;IT 100mAdc;IL 20uAdc;VSM 17.7Vpk;ISM 84.7Apk;TC 7.0;VM(wkg)9.1Vdc
108	1N6144A	6	Si	A69p	VBR 11.4-12.6Vdc;IT 100mAdc;IL 20uAdc;VSM 16.9Vpk;ISM 88.8Apk;TC 7.0;VM(wkg)9.1Vdc
109	1N6145	6	Si	A69p	VBR 11.7-14.3Vdc;IT 100mAdc;IL 20uAdc;VSM 19Vpk;ISM 78.9Apk;TC 8.0;VM(wkg)9.9Vdc
110	1N6145A	6	Si	A69p	VBR 12.35-13.65Vdc;IT 100mAdc;IL 20uAdc;VSM 18.2Vpk;ISM 82.4Apk;TC 8.0;VM(wkg)9.9Vdc

SYMBOLS AND CODES EXPLAINED IN INTERPRETER

7. TRANSIENT SUPPRESSOR DIODES - Bipolar & Unipolar Types (Cont'd)

IN ORDER OF (1) TYPE (2) MAT AND (3) TYPE NO.

LINE No.	3 TYPE NUMBER	1 TYPE	2 MAT.	DWG. NO.	DESCRIPTION
1	1N6146	6	Si	A69p	VBR 13.5-16.5Vdc;IT 75mAdc;IL 20uAdc;VSM 21.9Vpk;ISM 68.5Apk;TC 8.0;VM(wkg)11.4Vdc
2	1N6146A	6	Si	A69p	VBR 14.25-15.75Vdc;IT 75mAdc;IL 20uAdc;VSM 21Vpk;ISM 71.4Apk;TC 8.0;VM(wkg)11.4Vdc
3	1N6147	6	Si	A69p	VBR 14.4-17.6Vdc;IT 75mAdc;IL 20uAdc;VSM 23.4Vpk;ISM 64.1Apk;TC 8.0;VM(wkg)12.2Vdc
4	1N6147A	6	Si	A69p	VBR 15.2-16.8Vdc;IT 75mAdc;IL 20uAdc;VSM 22.3Vpk;ISM 67.3Apk;TC 8.0;VM(wkg)12.2Vdc
5	1N6148	6	Si	A69p	VBR 16.2-19.8Vdc;IT 65mAdc;IL 10uAdc;VSM 26.3Vpk;ISM 57Apk;TC 8.5;VM(wkg) 13.7Vdc
6	1N6148A	6	Si	A69p	VBR 17.1-18.9Vdc;IT 65mAdc;IL 10uAdc;VSM 25.1Vpk;ISM 59.8Apk;TC 8.5;VM(wkg) 13.7Vdc
7	1N6149	6	Si	A69p	VBR 18-22Vdc;IT 65mAdc;IL 5uAdc;VSM 29Vpk;ISM 51.7Apk;TC 8.5;VM(wkg) 15.2Vdc
8	1N6149A	6	Si	A69p	VBR 19-21Vdc;IT 65mAdc;IL 5uAdc;VSM 27.7Vpk;ISM 54.2Apk;TC 8.5;VM(wkg) 15.2Vdc
9	1N6150	6	Si	A69p	VBR 19.8-24.2Vdc;IT 50mAdc;IL 5uAdc;VSM 31.9Vpk;ISM 47Apk;TC 8.5;VM(wkg) 16.7Vdc
10	1N6150A	6	Si	A69p	VBR 20.9-23.1Vdc;IT 50mAdc;IL 5uAdc;VSM 30.5Vpk;ISM 49.2Apk;TC 8.5;VM(wkg) 16.7Vdc
11	1N6151	6	Si	A69p	VBR 21.6-26.4Vdc;IT 50mAdc;IL 5uAdc;VSM 34.8Vpk;ISM 43.1Apk;TC 9.0;VM(wkg) 18.2Vdc
12	1N6151A	6	Si	A69p	VBR 22.8-25.2Vdc;IT 50mAdc;IL 5uAdc;VSM 33.3Vpk;ISM 45Apk;TC 9.0;VM(wkg) 18.2Vdc
13	1N6152	6	Si	A69p	VBR 24.3-29.7Vdc;IT 50mAdc;IL 5uAdc;VSM 39.2Vpk;ISM 38.3Apk;TC 9.0;VM(wkg) 20.6Vdc
14	1N6152A	6	Si	A69p	VBR 25.7-28.3Vdc;IT 50mAdc;IL 5uAdc;VSM 37.4Vpk;ISM 40.1Apk;TC 9.0;VM(wkg) 20.6Vdc
15	1N6153	6	Si	A69p	VBR 27-33Vdc;IT 40mAdc;IL 5uAdc;VSM 43.6Vpk;ISM 34.4Apk;TC 9.0;VM(wkg) 22.8Vdc
16	1N6153A	6	Si	A69p	VBR 28.5-31.5Vdc;IT 40mAdc;IL 5uAdc;VSM 41.6Vpk;ISM 36Apk;TC 9.0;VM(wkg) 22.8Vdc
17	1N6154	6	Si	A69p	VBR 29.7-36.3Vdc;IT 40mAdc;IL 5uAdc;VSM 47.9Vpk;ISM 31.3Apk;TC 9.5;VM(wkg) 25.1Vdc
18	1N6154A	6	Si	A69p	VBR 31.4-34.6Vdc;IT 40mAdc;IL 5uAdc;VSM 45.7Vpk;ISM 32.8Apk;TC 9.5;VM(wkg) 25.1Vdc
19	1N6155	6	Si	A69p	VBR 32.4-39.6Vdc;IT 30mAdc;IL 5uAdc;VSM 52.3Vpk;ISM 28.7Apk;TC 9.5;VM(wkg) 27.4Vdc
20	1N6155A	6	Si	A69p	VBR 34.2-37.8Vdc;IT 30mAdc;IL 5uAdc;VSM 49.9Vpk;ISM 30.1Apk;TC 9.5;VM(wkg) 27.4Vdc
21	1N6156	6	Si	A69p	VBR 35.1-42.9Vdc;IT 30mAdc;IL 5uAdc;VSM 56.2Vpk;ISM 26.7Apk;TC 9.5;VM(wkg) 29.7Vdc
22	1N6156A	6	Si	A69p	VBR 37.1-40.9Vdc;IT 30mAdc;IL 5uAdc;VSM 53.6Vpk;ISM 28Apk;TC 9.5;VM(wkg) 29.7Vdc
23	1N6157	6	Si	A69p	VBR 38.7-47.3Vdc;IT 30mAdc;IL 5uAdc;VSM 62Vpk;ISM 24.2Apk;TC 9.5;VM(wkg) 32.7Vdc
24	1N6157A	6	Si	A69p	VBR 40.9-45.1Vdc;IT 30mAdc;IL 5uAdc;VSM 59.1Vpk;ISM 25.4Apk;TC 9.5;VM(wkg) 32.7Vdc
25	1N6158	6	Si	A69p	VBR 42.3-51.7Vdc;IT 25mAdc;IL 5uAdc;VSM 67.7Vpk;ISM 22.2Apk;TC 9.5;VM(wkg) 35.8Vdc
26	1N6158A	6	Si	A69p	VBR 44.7-49.3Vdc;IT 25mAdc;IL 5uAdc;VSM 64.6Vpk;ISM 23.2Apk;TC 9.5;VM(wkg) 35.8Vdc
27	1N6159	6	Si	A69p	VBR 45.9-56.1Vdc;IT 25mAdc;IL 5uAdc;VSM 73.5Vpk;ISM 20.4Apk;TC 9.5;VM(wkg) 38.8Vdc
28	1N6159A	6	Si	A69p	VBR 48.5-53.5Vdc;IT 25mAdc;IL 5uAdc;VSM 70.1Vpk;ISM 21.4Apk;TC 9.5;VM(wkg) 38.8Vdc
29	1N6160	6	Si	A69p	VBR 50.4-61.6Vdc;IT 20mAdc;IL 5uAdc;VSM 80.7Vpk;ISM 18.6Apk;TC 9.5;VM(wkg) 42.6Vdc
30	1N6160A	6	Si	A69p	VBR 53.2-58.8Vdc;IT 20mAdc;IL 5uAdc;VSM 77Vpk;ISM 19.5Apk;TC 9.5;VM(wkg) 42.6Vdc
31	1N6161	6	Si	A69p	VBR 55.8-68.2Vdc;IT 20mAdc;IL 5uAdc;VSM 89.3Vpk;ISM 16.8Apk;TC 10;VM(wkg) 47.1Vdc
32	1N6161A	6	Si	A69p	VBR 58.9-65.1Vdc;IT 20mAdc;IL 5uAdc;VSM 85.3Vpk;ISM 17.6Apk;TC 10;VM(wkg) 47.1Vdc
33	1N6162	6	Si	A69p	VBR 61.2-74.8Vdc;IT 20mAdc;IL 5uAdc;VSM 98Vpk;ISM 15.3Apk;TC 10;VM(wkg) 51.7Vdc
34	1N6162A	6	Si	A69p	VBR 64.6-74.1Vdc;IT 20mAdc;IL 5uAdc;VSM 97.1Vpk;ISM 15.4Apk;TC 10;VM(wkg) 51.7Vdc
35	1N6163	6	Si	A69p	VBR 67.5-82.5Vdc;IT 20mAdc;IL 5uAdc;VSM 108.1Vpk;ISM 13.9Apk;TC 10;VM(wkg) 56Vdc
36	1N6163A	6	Si	A69p	VBR 71.3-78.7Vdc;IT 20mAdc;IL 5uAdc;VSM 103.1Vpk;ISM 14.5Apk;TC 10;VM(wkg) 56Vdc
37	1N6164	6	Si	A69p	VBR 73.8-90.2Vdc;IT 15mAdc;IL 5uAdc;VSM 118.2Vpk;ISM 12.7Apk;TC 10;VM(wkg) 62.2Vdc
38	1N6164A	6	Si	A69p	VBR 77.9-86.1Vdc;IT 15mAdc;IL 5uAdc;VSM 112.8Vpk;ISM 13.3Apk;TC 10;VM(wkg) 62.2Vdc
39	1N6165	6	Si	A69p	VBR 81.9-100.1Vdc;IT 15mAdc;IL 5uAdc;VSM 131.1Vpk;ISM 11.4Apk;TC 10;VM(wkg) 69.2Vdc
40	1N6165A	6	Si	A69p	VBR 86.5-95.5Vdc;IT 15mAdc;IL 5uAdc;VSM 125.1Vpk;ISM 12Apk;TC 10;VM(wkg) 69.2Vdc
41	1N6166	6	Si	A69p	VBR 90-110Vdc;IT 12mAdc;IL 5uAdc;VSM 144.1Vpk;ISM 10.4Apk;TC 10;VM(wkg) 76Vdc
42	1N6166A	6	Si	A69p	VBR 95-105Vdc;IT 12mAdc;IL 5uAdc;VSM 137.6Vpk;ISM 10.9Apk;TC 10;VM(wkg) 76Vdc
43	1N6167	6	Si	A69p	VBR 99-121Vdc;IT 12mAdc;IL 5uAdc;VSM 158.5Vpk;ISM 9.5Apk;TC 10;VM(wkg) 83.6Vdc
44	1N6167A	6	Si	A69p	VBR 104.5-115.5Vdc;IT 12mAdc;IL 5uAdc;VSM 151.3Vpk;ISM 9.9Apk;TC 10;VM(wkg) 83.6Vdc
45	1N6168	6	Si	A69p	VBR 108-132Vdc;IT 10mAdc;IL 5uAdc;VSM 172.9Vpk;ISM 8.7Apk;TC 10;VM(wkg) 91.2Vdc
46	1N6168A	6	Si	A69p	VBR 114-126Vdc;IT 10mAdc;IL 5uAdc;VSM 165.1Vpk;ISM 9.1Apk;TC 10;VM(wkg) 91.2Vdc
47	1N6169	6	Si	A69p	VBR 117-143Vdc;IT 10mAdc;IL 5uAdc;VSM 187.3Vpk;ISM 8.0Apk;TC 10.5;VM(wkg) 98.8Vdc
48	1N6169A	6	Si	A69p	VBR 123.5-136.5Vdc;IT 10mAdc;IL 5uAdc;VSM 178.8Vpk;ISM 8.4Apk;TC 10.5;VM(wkg) 98.8Vdc
49	1N6170	6	Si	A69p	VBR 135-165Vdc;IT 8mAdc;IL 5uAdc;VSM 216.2Vpk;ISM 6.9Apk;TC 10.5;VM(wkg) 114Vdc
50	1N6170A	6	Si	A69p	VBR 142.5-157.5Vdc;IT 8mAdc;IL 5uAdc;VSM 206.3Vpk;ISM 7.3Apk;TC 10.5;VM(wkg) 114Vdc
51	1N6171	6	Si	A69p	VBR 144-176Vdc;IT 8mAdc;IL 5uAdc;VSM 228.8Vpk;ISM 6.6Apk;TC 10.5;VM(wkg) 121.6Vdc
52	1N6171A	6	Si	A69p	VBR 152-168Vdc;IT 8mAdc;IL 5uAdc;VSM 218.4Vpk;ISM 6.9Apk;TC 10.5;VM(wkg) 121.6Vdc
53	1N6172	6	Si	A69p	VBR 162-198Vdc;IT 5mAdc;IL 5uAdc;VSM 257.4Vpk;ISM 5.8Apk;TC 11;VM(wkg) 136.8Vdc
54	1N6172A	6	Si	A69p	VBR 171-189Vdc;IT 5mAdc;IL 5uAdc;VSM 245.7Vpk;ISM 6.1Apk;TC 11;VM(wkg) 136.8Vdc
55	1N6173	6	Si	A69p	VBR 180-220Vdc;IT 5mAdc;IL 5uAdc;VSM 286Vpk;ISM 5.2Apk;TC 11;VM(wkg) 152Vdc
56	1N6173A	6	Si	A69p	VBR 190-210Vdc;IT 5mAdc;IL 5uAdc;VSM 273Vpk;ISM 5.5Apk;TC 11;VM(wkg) 152Vdc
57	1N6267	6	Si	A298ar	BV 6.12-7.48V at IR 10mA;VRWM 5.50V;IR 1.0mA;I Surge 139Amax;Pd 5.0W
58	1N6267A	6	Si	A298ar	BV 6.45-7.14V at IR 10mA;VRWM 5.80V;IR 1.0mA;I Surge 143Amax;Pd 5.0W
59	1N6268	6	Si	A298ar	BV 6.75-8.25V at IR 10mA;VRWM 6.05V;IR 500uA;I Surge 128Amax;Pd 5.0W
60	1N6268A	6	Si	A298ar	BV 7.13-7.88V at IR 10mA;VRWM 6.40V;IR 500uA;I Surge 132Amax;Pd 5.0W
61	1N6269	6	Si	A298ar	BV 7.38-9.02V at IR 10mA;VRWM 6.63V;IR 200uA;I Surge 120Amax;Pd 5.0W
62	1N6269A	6	Si	A298ar	BV 7.79-8.61V at IR 10mA;VRWM 7.02V;IR 200uA;I Surge 124Amax;Pd 5.0W
63	1N6270	6	Si	A298ar	BV 8.19-10.00V at IR 1.0mA;VRWM 7.37V;IR 50uA;I Surge 109Amax;Pd 5.0W
64	1N6270A	6	Si	A298ar	BV 8.65-9.55V at IR 1.0mA;VRWM 7.78V;IR 50uA;I Surge 112Amax;Pd 5.0W
65	1N6271	6	Si	A298ar	BV 9.00-11.00V at IR 1.0mA;VRWM 8.10V;IR 10uA;I Surge 100Amax;Pd 5.0W
66	1N6271A	6	Si	A298ar	BV 9.50-10.50V at IR 1.0mA;VRWM 8.55V;IR 10uA;I Surge 103Amax;Pd 5.0W
67	1N6272	6	Si	A298ar	BV 9.90-12.10V at IR 1.0mA;VRWM 8.92V;IR 5.0uA;I Surge 93Amax;Pd 5.0W
68	1N6272A	6	Si	A298ar	BV 10.5-11.6V at IR 1.0mA;VRWM 9.40V;IR 5.0uA;I Surge 96Amax;Pd 5.0W
69	1N6273	6	Si	A298ar	BV 10.8-13.2V at IR 1.0mA;VRWM 9.72V;IR 5.0uA;I Surge 87Amax;Pd 5.0W
70	1N6273A	6	Si	A298ar	BV 11.4-12.6V at IR 1.0mA;VRWM 10.2V;IR 5.0uA;I Surge 90Amax;Pd 5.0W
71	1N6274	6	Si	A298ar	BV 11.7-14.3V at IR 1.0mA;VRWM 10.5V;IR 5.0uA;I Surge 79Amax;Pd 5.0W
72	1N6274A	6	Si	A298ar	BV 12.4-13.7V at IR 1.0mA;VRWM 11.1V;IR 5.0uA;I Surge 82Amax;Pd 5.0W
73	1N6275	6	Si	A298ar	BV 13.5-16.5V at IR 1.0mA;VRWM 12.1V;IR 5.0uA;I Surge 68Amax;Pd 5.0W
74	1N6275A	6	Si	A298ar	BV 14.3-15.8V at IR 1.0mA;VRWM 12.8V;IR 5.0uA;I Surge 71Amax;Pd 5.0W
75	1N6276	6	Si	A298ar	BV 14.4-17.6V at IR 1.0mA;VRWM 12.9V;IR 5.0uA;I Surge 64Amax;Pd 5.0W
76	1N6276A	6	Si	A298ar	BV 15.2-16.8V at IR 1.0mA;VRWM 13.6V;IR 5.0uA;I Surge 67Amax;Pd 5.0W
77	1N6277	6	Si	A298ar	BV 16.2-19.8V at IR 1.0mA;VRWM 14.5V;IR 5.0uA;I Surge 56.5Amax;Pd 5.0W
78	1N6277A	6	Si	A298ar	BV 17.1-18.9V at IR 1.0mA;VRWM 15.3V;IR 5.0uA;I Surge 59.5Amax;Pd 5.0W
79	1N6278	6	Si	A298ar	BV 18.0-22.0V at IR 1.0mA;VRWM 16.2V;IR 5.0uA;I Surge 51.5Amax;Pd 5.0W
80	1N6278A	6	Si	A298ar	BV 19.0-21.0V at IR 1.0mA;VRWM 17.1V;IR 5.0uA;I Surge 54Amax;Pd 5.0W
81	1N6279	6	Si	A298ar	BV 19.8-24.2V at IR 1.0mA;VRWM 17.8V;IR 5.0uA;I Surge 47Amax;Pd 5.0W
82	1N6279A	6	Si	A298ar	BV 20.9-23.1V at IR 1.0mA;VRWM 18.8V;IR 5.0uA;I Surge 49Amax;Pd 5.0W
83	1N6280	6	Si	A298ar	BV 21.6-26.4V at IR 1.0mA;VRWM 19.4V;IR 5.0uA;I Surge 43Amax;Pd 5.0W
84	1N6280A	6	Si	A298ar	BV 22.8-25.2V at IR 1.0mA;VRWM 20.5V;IR 5.0uA;I Surge 45Amax;Pd 5.0W
85	1N6281	6	Si	A298ar	BV 24.3-29.7V at IR 1.0mA;VRWM 21.8V;IR 5.0uA;I Surge 38.5Amax;Pd 5.0W
86	1N6281A	6	Si	A298ar	BV 25.7-28.4V at IR 1.0mA;VRWM 23.1V;IR 5.0uA;I Surge 40Amax;Pd 5.0W
87	1N6282	6	Si	A298ar	BV 27.0-33.0V at IR 1.0mA;VRWM 24.3V;IR 5.0uA;I Surge 34.5Amax;Pd 5.0W
88	1N6282A	6	Si	A298ar	BV 28.5-31.5V at IR 1.0mA;VRWM 25.6V;IR 5.0uA;I Surge 36Amax;Pd 5.0W
89	1N6283	6	Si	A298ar	BV 29.7-36.3V at IR 1.0mA;VRWM 26.8V;IR 5.0uA;I Surge 31.5Amax;Pd 5.0W
90	1N6283A	6	Si	A298ar	BV 31.4-34.7V at IR 1.0mA;VRWM 28.2V;IR 5.0uA;I Surge 33Amax;Pd 5.0W
91	1N6284	6	Si	A298ar	BV 32.4-39.6V at IR 1.0mA;VRWM 29.1V;IR 5.0uA;I Surge 29Amax;Pd 5.0W
92	1N6284A	6	Si	A298ar	BV 34.2-37.8V at IR 1.0mA;VRWM 30.8V;IR 5.0uA;I Surge 30Amax;Pd 5.0W
93	1N6285	6	Si	A298ar	BV 35.1-42.9V at IR 1.0mA;VRWM 31.6V;IR 5.0uA;I Surge 26.5Amax;Pd 5.0W
94	1N6285A	6	Si	A298ar	BV 37.1-41.0V at IR 1.0mA;VRWM 33.3V;IR 5.0uA;I Surge 28Amax;Pd 5.0W
95	1N6286	6	Si	A298ar	BV 38.7-47.3V at IR 1.0mA;VRWM 34.8V;IR 5.0uA;I Surge 24Amax;Pd 5.0W
96	1N6286A	6	Si	A298ar	BV 40.9-45.2V at IR 1.0mA;VRWM 36.8V;IR 5.0uA;I Surge 25.3Amax;Pd 5.0W
97	1N6287	6	Si	A298ar	BV 42.3-51.7V at IR 1.0mA;VRWM 38.1V;IR 5.0uA;I Surge 22.2Amax;Pd 5.0W
98	1N6287A	6	Si	A298ar	BV 44.7-49.4V at IR 1.0mA;VRWM 40.2V;IR 5.0uA;I Surge 23.2Amax;Pd 5.0W
99	1N6288	6	Si	A298ar	BV 45.9-56.1V at IR 1.0mA;VRWM 41.3V;IR 5.0uA;I Surge 20.4Amax;Pd 5.0W
100	1N6288A	6	Si	A298ar	BV 48.5-53.6V at IR 1.0mA;VRWM 43.6V;IR 5.0uA;I Surge 21.4Amax;Pd 5.0W
101	1N6289	6	Si	A298ar	BV 50.4-61.6V at IR 1.0mA;VRWM 45.4V;IR 5.0uA;I Surge 18.6Amax;Pd 5.0W
102	1N6289A	6	Si	A298ar	BV 53.2-58.8V at IR 1.0mA;VRWM 47.8V;IR 5.0uA;I Surge 19.5Amax;Pd 5.0W
103	1N6290	6	Si	A298ar	BV 55.8-68.2V at IR 1.0mA;VRWM 50.2V;IR 5.0uA;I Surge 16.9Amax;Pd 5.0W
104	1N6290A	6	Si	A298ar	BV 58.9-65.1V at IR 1.0mA;VRWM 53.0V;IR 5.0uA;I Surge 17.7Amax;Pd 5.0W
105	1N6291	6	Si	A298ar	BV 61.2-74.8V at IR 1.0mA;VRWM 55.1V;IR 5.0uA;I Surge 15.3Amax;Pd 5.0W
106	1N6291A	6	Si	A298ar	BV 64.6-71.4V at IR 1.0mA;VRWM 58.1V;IR 5.0uA;I Surge 16.3Amax;Pd 5.0W
107	1N6292	6	Si	A298ar	BV 67.5-82.5V at IR 1.0mA;VRWM 60.7V;IR 5.0uA;I Surge 13.9Amax;Pd 5.0W
108	1N6292A	6	Si	A298ar	BV 71.3-78.8V at IR 1.0mA;VRWM 64.1V;IR 5.0uA;I Surge 14.6Amax;Pd 5.0W
109	1N6293	6	Si	A298ar	BV 73.8-90.2V at IR 1.0mA;VRWM 66.4V;IR 5.0uA;I Surge 12.7Amax;Pd 5.0W
110	1N6293A	6	Si	A298ar	BV 77.9-86.1V at IR 1.0mA;VRWM 70.1V;IR 5.0uA;I Surge 13.3Amax;Pd 5.0W

SYMBOLS AND CODES EXPLAINED IN INTERPRETER

7. TRANSIENT SUPPRESSOR DIODES - Bipolar & Unipolar Types (Cont'd)

IN ORDER OF (1) TYPE (2) MAT AND (3) TYPE NO.

LINE No.	3 TYPE NUMBER	1 TYPE	2 MAT.	DWG. NO.	DESCRIPTION
1	1N6294	6	Si	A298ar	BV 81.9-100V at IR 1.0mA;VRWM 73.7V;IR 5.0uA;I Surge 11.4Amax;Pd 5.0W
2	1N6294A	6	Si	A298ar	BV 86.5-95.5V at IR 1.0mA;VRWM 77.8V;IR 5.0uA;I Surge 12.0Amax;Pd 5.0W
3	1N6295	6	Si	A298ar	BV 90-110V at IR 1.0mA;VRWM 81.0V;IR 5.0uA;I Surge 10.4Amax;Pd 5.0W
4	1N6295A	6	Si	A298ar	BV 95-105V at IR 1.0mA;VRWM 85.5V;IR 5.0uA;I Surge 11.0Amax;Pd 5.0W
5	1N6296	6	Si	A298ar	BV 99-121V at IR 1.0mA;VRWM 89.2V;IR 5.0uA;I Surge 9.5Amax;Pd 5.0W
6	1N6296A	6	Si	A298ar	BV 105-116V at IR 1.0mA;VRWM 94.0V;IR 5.0uA;I Surge 9.9Amax;Pd 5.0W
7	1N6297	6	Si	A298ar	BV 108-132V at IR 1.0mA;VRWM 97.2V;IR 5.0uA;I Surge 8.7Amax;Pd 5.0W
8	1N6297A	6	Si	A298ar	BV 114-126V at IR 1.0mA;VRWM 102V;IR 5.0uA;I Surge 9.1Amax;Pd 5.0W
9	1N6298	6	Si	A298ar	BV 117-143V at IR 1.0mA;VRWM 105V;IR 5.0uA;I Surge 8.0Amax;Pd 5.0W
10	1N6298A	6	Si	A298ar	BV 124-137V at IR 1.0mA;VRWM 111V;IR 5.0uA;I Surge 8.4Amax;Pd 5.0W
11	1N6299	6	Si	A298ar	BV 135-165V at IR 1.0mA;VRWM 121V;IR 5.0uA;I Surge 7.0Amax;Pd 5.0W
12	1N6299A	6	Si	A298ar	BV 143-158V at IR 1.0mA;VRWM 128V;IR 5.0uA;I Surge 7.2Amax;Pd 5.0W
13	1N6300	6	Si	A298ar	BV 144-176V at IR 1.0mA;VRWM 130V;IR 5.0uA;I Surge 6.5Amax;Pd 5.0W
14	1N6300A	6	Si	A298ar	BV 152-168V at IR 1.0mA;VRWM 136V;IR 5.0uA;I Surge 6.8Amax;Pd 5.0W
15	1N6301	6	Si	A298ar	BV 153-187V at IR 1.0mA;VRWM 138V;IR 5.0uA;I Surge 6.2Amax;Pd 5.0W
16	1N6301A	6	Si	A298ar	BV 162-179V at IR 1.0mA;VRWM 145V;IR 5.0uA;I Surge 6.4Amax;Pd 5.0W
17	1N6302	6	Si	A298ar	BV 162-198V at IR 1.0mA;VRWM 146V;IR 5.0uA;I Surge 5.8Amax;Pd 5.0W
18	1N6302A	6	Si	A298ar	BV 171-189V at IR 1.0mA;VRWM 154V;IR 5.0uA;I Surge 6.1Amax;Pd 5.0W
19	1N6303	6	Si	A298ar	BV 180-220V at IR 1.0mA;VRWM 162V;IR 5.0uA;I Surge 5.2Amax;Pd 5.0W
20	1N6303A	6	Si	A298ar	BV 190-210V at IR 1.0mA;VRWM 171V;IR 5.0uA;I Surge 5.5Amax;Pd 5.0W
21	1N6309	6	Si	A398i	Vz2 nom,±5%,Iz 20mA,2.4V;Zz 30Ω;IZM 227mA;VR 1.0V;ir surge 2.5A;PT 750mW
22	1N6310	6	Si	A398i	Vz2 nom,±5%,Iz 20mA,2.7V;Zz 30Ω;IZM 208mA;VR 1.0V;ir surge 2.2A;PT 750mW
23	1N6311	6	Si	A398i	Vz2 nom,±5%,Iz 20mA 3.0V;Zz 29Ω;IZM 193mA;VR 1.0V;ir surge 2.0A;PT 750mW
24	1N6312	6	Si	A398i	Vz2 nom,±5%,Iz 20mA,3.3V;Zz 24Ω;IZM 179mA;VR 1.0V;ir surge 1.8A;PT 750mW
25	1N6314	6	Si	A398i	Vz2 nom,±5%,Iz 20mA,3.9V;Zz 20Ω;IZM 157mA;VR 1.0V;ir surge 1.5A;PT 750mW
26	1N6316	6	Si	A398i	Vz2 nom,±5%,Iz 20mA,4.7V;Zz 16Ω;IZM 129mA;VR 1.5V;ir surge 1.27A;PT 750mW
27	1N6317	6	Si	A398i	Vz2 non,±5%,Iz 20mA,5.1V;Zz 14Ω;IZM 120mA;VR 2.0V;ir surge 1.17A;PT 750mW
28	1N6318	6	Si	A398i	Vz2 nom,±5%,Iz 20mA,5.6V;Zz 8.0Ω;IZM 110mA;VR 2.5V;ir surge 1.10A;PT 750mW
29	1N6319	6	Si	A398i	Vz2 nom,±5%,Iz 20mA,6.2V;Zz 30Ω;IZM 99mA;VR 3.5V;ir surge .97A;PT 750mW
30	1N6320	6	Si	A398i	Vz2 nom,±5%,Iz 20mA,6.8V;Zz 3.0Ω;IZM 90mA;VR 4.0V;ir surge 1.23A;PT 750mW
31	1N6323	6	Si	A398i	Vz nom,±5%,Iz 20mA, 9.1V;Zz 6.0Ω;IZM 68mA;VR 7.0V;ir Surge .97A;PT 750mW
32	1N6324	6	Si	A398i	Vz2 nom,±5%,Iz 20mA, 10V;Zz 6.0Ω;IZM 62mA;VR 8.0V;ir Surge .89A;PT 750mW
33	1N6325	6	Si	A398i	Vz nom,±5%,Iz 20mA, 11V;Zz 7.0Ω;IZM 56mA;VR 8.5Vir Surge .83A;PT 750mW
34	1N6326	6	Si	A398i	Vz nom,±5%,Iz 20mA, 12V;Zz 7.0Ω;IZM 52mA;VR 9.0V;ir Surge .77;PT 750mW
35	1N6327	6	Si	A398i	Vz2nom,±5%,Iz 9.5A, 13V;Zz 8.0Ω;IZM 48mA;VR 9.9V;ir Surge .71;PT 750mW
36	1N6328	6	Si	A398i	Vz2 nom,±5%,Iz 8.5mA, 15V;Zz 10Ω;IZM 42mA;VR 11;ir Surge .62A;PT 750mW
37	1N6329	6	Si	A398i	Vz2 nom,±5%,Iz 7.8mA, 16V;Zz 12Ω;IZM 40mA;VR 12V;ir Surge .58A;PT 750mW
38	1N6330	6	Si	A398i	Vz2 nom,±5%,Iz 7.0mA, 18V;Zz 14Ω;IZM 35mA;VR 14V;ir Surge .52A;PT 750mW
39	1N6331	6	Si	A398i	Vz2 nom,±5%,IZ 6.2mA, 20V;Zz 18Ω;IZM 32mA,VR 15V;ir Surge .47;PT 750mW
40	1N6402	6	Si	A398f	Transient Voltage Suppressor;VBR 6.4-7.3V;IRM 800uA max
41	1N6402A	6	Si	A398f	Transient Voltage Suppressor;VBR -6.4-7.0V;IRM 800uA max
42	1N6403	6	Si	A398f	Transient Voltage Suppressor;VBR 6.6-8.15V;IRM 800uA max
43	1N6403A	6	Si	A398f	Transient Voltage Suppressor;VBR -6.6-7.37V;IRM 800uA max
44	1N6404	6	Si	A398f	Transient Voltage Suppressor;VBR 7.2-8.8V;IRM 500uA max
45	1N6404A	6	Si	A398f	Transient Voltage Suppressor;VBR -7.2-7.9V;IRM 500uA max
46	1N6405	6	Si	A398f	Transient Voltage Suppressor;VBR -7.7-9.51V;IRM 200uA max
47	1N6405A	6	Si	A398f	Transient Voltage Suppressor;VBR -7.7-8.6V;IRM 200uA max
48	1N6406	6	Si	A398f	Transient Voltage Suppressor;VBR 8.3-10.2V;IRM 100uA max
49	1N6406A	6	Si	A398f	Transient Voltage Suppressor;VBR -8.3-9.2V;IRM 100uA max
50	1N6407	6	Si	A398f	Transient Voltage Suppressor;VBR 8.8-10.9V;IRM 50uA max
51	1N6407A	6	Si	A398f	Transient Voltage Suppressor;VBR -8.9-9.8V;IRM 50uA max
52	1N6408	6	Si	A398f	Transient Voltage Suppressor;VBR 9.4-11.5V;IRM 10uA max
53	1N6408A	6	Si	A398f	Transient Voltage Suppressor;VBR -9.4 - 10.4V;IRM 10uA max
54	1N6409	6	Si	A398f	Transient Voltage Suppressor;VBR 10 - 12V;IRM 5.0uA max
55	1N6409A	6	Si	A398f	Transient Voltage Suppressor:VBR -10 - 11.1V;IRM 5.0uA max
56	1N6410	6	Si	A398f	Transient Voltage Suppressor:VBR 11 - 13V;IRM 5.0uA max
57	1N6410A	6	Si	A398f	Transient Voltage Suppressor:VBR -11 - 12V;IRM 5.0uA max
58	1N6411	6	Si	A398f	Transient Voltage Suppressor;VBR 12-14V;IRM 5.0uA max
59	1N6411A	6	Si	A398f	Transient Voltage Suppressor;VBR -12-13V;IRM 5.0uA max
60	1N6412	6	Si	A398f	Transient Voltage Suppressor;VBR 13-16V;IRM 5.0uA max
61	1N6412A	6	Si	A398f	Transient Voltage Suppressor;VBR -13-14V;IRM 5.0uA max
62	1N6413	6	Si	A398f	Transient Voltage Suppressor;VBR 14-17V;IRM 5.0uA max
63	1N6413A	6	Si	A398f	Transient Voltage Suppressor;VBR -14-15V;IRM 5.0uA max
64	1N6414	6	Si	A398F	Transient Voltage Suppressor;VBR 15-19V;IRM 5.0uA max
65	1N6414A	6	Si	A398F	Transient Voltage Suppressor;VBR -15-17V;IRM 5.0uA max
66	1N6415	6	Si	A398F	Transient Voltage Suppressor;VBR 16-20V;IRM 5.0uA max
67	1N6415A	6	Si	A398F	Transient Voltage Suppressor;VBR -16-18V;IRM 5.0uA max
68	1N6416	6	Si	A398F	Transient Voltage Suppressor;VBR 17-21V;IRM 5.0uA max
69	1N6416A	6	Si	A398F	Transient Voltage Suppressor;VBR -17-19V;IRM 5.0uA max
70	1N6417	6	Si	A398F	Transient Voltage Suppressor;VBR 18-23V;IRM 5.0uA max
71	1N6417A	6	Si	A398F	Transient Voltage Suppressor;VBR -18-20V;IRM 5.0uA max
72	1N6418	6	Si	A398F	Transient Voltage Suppressor;VBR 20-24V;IRM 5.0uA max
73	1N6418A	6	Si	A398F	Transient Voltage Suppressor;VBR -20-22V;IRM 5.0uA max
74	1N6419	6	Si	A398F	Transient Voltage Suppressor;VBR 22-27V;IRM 5.0 uA max
75	1N6419A	6	Si	A398F	Transient Voltage Suppressor;VBR -22-24V;IRM 5.0uA max
76	1N6420	6	Si	A398F	Transient Voltage Suppressor;VBR 24-29V;IRM 5.0uA max
77	1N6420A	6	Si	A398F	Transient Voltage Suppressor;VBR -24-26V;IRM 5.0uA max
78	1N6421	6	Si	A398F	Transient Voltage Suppressor;VBR 26-32V;IRM 5.0uA max
79	1N6421A	6	Si	A398F	Transient Voltage Suppressor;VBR -26-29V;IRM 5.0uA max
80	1N6422	6	Si	A398F	Transient Voltage Suppressor;VBR 28-35V;IRM 5.0uA max
81	1N6422A	6	Si	A398F	Transient Voltage Suppressor;VBR -28-31V;IRM 5.0uA max
82	1N6423	6	Si	A398F	Transient Voltage Suppressor;VBR 31-38V;IRM 5.0uA max
83	1N6423A	6	Si	A398F	Transient Voltage Suppressor;VBR -31-34V;IRM 5.0uA max
84	1N6424	6	Si	A398F	Transient Voltage Suppressor;VBR 33-40V;IRM 5.0uA max
85	1N6424A	6	Si	A398F	Transient Voltage Suppressor;VBR -33-36V;IRM 5.0uA max
86	1N6425	6	Si	A398F	Transient Voltage Suppressor;VBR 36-44V;IRM 5.0uA max
87	1N6425A	6	Si	A398f	Transient Voltage Suppressor;VBR-36-40V;IRM 5.0uA max
88	1N6426	6	Si	A398F	Transient Voltage Suppressor;VBR 40-48V;IRM 5.0uA max
89	1N6426A	6	Si	A398F	Transient Voltage Suppressor;VBR -40-44V;IRM 5.0uA max
90	1N6427	6	Si	A398F	Transient Voltage Suppressor;VBR 44-54V;IRM 5.0uA max
91	1N6427A	6	Si	A398F	Transient Voltage Suppressor;VBR -44-49V;IRM 5.0uA max
92	1N6428	6	Si	A398F	Transient Voltage Suppressor;VBR 47-58V;IRM 5.0uA max
93	1N6428A	6	Si	A398F	Transient Voltage Suppressor;VBR -47-52V;IRM 5.0uA max
94	1N6429	6	Si	A398F	Transient Voltage Suppressor;VBR 50-61V;IRM 5.0uA max
95	1N6429A	6	Si	A398F	Transient Voltage Suppressor;VBR -50-55V;IRM 5.0uA max
96	1N6430	6	Si	A398F	Transient Voltage Suppressor;VBR 53-65V;IRM 5.0uA max
97	1N6430A	6	Si	A398F	Transient Voltage Suppressor;VBR -53-58V;IRM 5.0uA max
98	1N6431	6	Si	A398F	Transient Voltage Suppressor;VBR 56-69V;IRM 5.0uA max
99	1N6431A	6	Si	A398F	Transient Voltage Suppressor;VBR -56-62V;IRM 5.0uA max
100	1N6438	6	Si	A398f	Transient Voltage Suppressor;VBR 86-106V;IRM 5.0uA max
101	1N6438A	6	Si	A398f	Transient Voltage Suppressor;VBR -86-95V;IRM 5.0uA max
102	1N6439	6	Si	A398f	Transient Voltage Suppressor;VBR 94-115V;IRM 5.0uA max
103	1N6439A	6	Si	A398f	Transient Voltage Suppressor;VBR -94-104V;IRM 5.0uA max
104	1N6440	6	Si	A398f	Transient Voltage Suppressor;VBR 100-122V;IRM 5.0uA max
105	1N6440A	6	Si	A398f	Transient Voltage Suppressor;VBR -100-111V;IRM 5.0uA max
106	1N6441	6	Si	A398f	Transient Voltage Suppressor;VBR 111-136V;IRM 5.0uA max
107	1N6441A	6	Si	A398f	Transient Voltage Suppressor;VBR -111-123V;IRM 5.0uA max
108	1N6442	6	Si	A398f	Transient Voltage Suppressor;VBR 122-149V;IRM 5.0uA max
109	1N6442A	6	Si	A398f	Transient Voltage Suppressor;VBR -122-135V;IRM 5.0uA max
110	1N6443	6	Si	A398f	Transient Voltage Suppressor;VBR 133-163V;IRM 5.0uA max

SYMBOLS AND CODES EXPLAINED IN INTERPRETER

7. TRANSIENT SUPPRESSOR DIODES - Bipolar & Unipolar Types (Cont'd)

IN ORDER OF (1) TYPE (2) MAT AND (3) TYPE NO.

LINE No.	3 TYPE NUMBER	1 TYPE	2 MAT.	DWG. NO.	DESCRIPTION
1	1N6443A	6	Si	A398f	Transient Voltage Suppressor;VBR -133-147V;IRM 5.0uA max
2	1N6444	6	Si	A398f	Transient Voltage Suppressor;VBR 144-176V;IRM 5.0uA max
3	1N6445	6	Si	A398f	Transient Voltage Suppressor;VBR 167-204V;IRM 5.0uA max
4	1N6445A	6	Si	A398f	Transient Voltage Suppressor;VBR -167-185V;IRM 5.0uA max
5	1N6446	6	Si	A398f	Transient Voltage Suppressor;VBR 178-218V;IRM 5.0uA max
6	1N6446A	6	Si	A398f	Transient Voltage Suppressor;VBR -178-197V;IRM 5.0uA max
7	1N6447	6	Si	A398f	Transient Voltage Suppressor;VBR 189-231V;IRM 5.0uA max
8	1N6447A	6	Si	A398f	Transient Voltage Suppressor;VBR -189-209V;IRM 5.0uA max
9	1N6448	6	Si	A398f	Transient Voltage Suppressor;VBR 200-244V;IRM 5.0uA max
10	1N6448A	6	Si	A398f	Transient Voltage Suppressor;VB4 -200-221V;IRM 5.0uA max
11	1N6449	6	Si	A398f	Transient Voltage Suppressor;VBR 222-271V;IRM 5.0uA max
12	1N6449A	6	Si	A398f	Transient Voltage Suppressor;VBR -222-245V;IRM 5.0uA max
13	1N6450	6	Si	A398F	Transient Voltage Suppressor;VBR 245-299V;IRM 5.0uA max
14	1N6450A	6	Si	A398F	Transient Voltage Suppressor;VBR -245-271V;IRM 5.0uA max
15	1N6451A	6	Si	A398F	Transient Voltage Suppressor;VBR -267-295V;IRM 5.0uA max
16	1N6452	6	Si	A398F	Transient Voltage Suppressor;VBR 289-353V;IRM 5.0uA max
17	1N6452A	6	Si	A398F	Transient Voltage Suppressor;VBR -289-319V;IRM 5.0uA max
18	1N6453	6	Si	A398F	Transient Voltage Suppressor;VBR 311-380V;IRM 5.0uA max
19	1N6453A	6	Si	A398F	Transient Voltage Suppressor;VBR -311-344V;IRM 5.0uA max
20	1N6454	6	Si	A398F	Transient Voltage Suppressor;VBR 333-407V;IRM 5.0uA max
21	1N6454A	6	Si	A398F	Transient Voltage Suppressor;VBR -333-368V;IRM 5.0uA max
22	1N6455A	6	Si	A398F	Transient Voltage Suppressor;VBR -355-393V;IRM 5.0uA max
23	1N6456	6	Si	A398f	Transient Voltage Suppressor;VBR 377-461 V;IRM 5.0uA max
24	1N6456A	6	Si	A398f	Transient Voltage Suppressor;VBR-377-417V;IRM 5.0uA max
25	1.5K6.8	6	Si	DO13	PP 1.5kW;Pd 1.0W;VR(wkg)5.50V;IR(surge)max 139 A;IR max 1.0m
26	1.5K6.8A	6	Si	DO13	PP 1.5kW;Pd 1.0W;VR(wkg)5.80V;IR(surge)max 143 A;IR max 1.0m
27	1.5K7.5	6	Si	DO13	PP 1.5kW;Pd 1.0W;VR(wkg)6.05V;IR(surge)max128 A;IR max 500u
28	1.5K7.5A	6	Si	DO13	PP 1.5kW;Pd 1.0W;VR(wkg)6.40V;IR(surge)max 132 A;IR max 500u
29	1.5K8.2	6	Si	DO13	PP 1.5kW;Pd 1.0W;VR(wkg)6.63V;IR(surge)max 120 A;IR max 200u
30	1.5K8.2A	6	Si	DO13	PP 1.5kW;Pd 1.0W;VR(wkg)7.02V;IR(surge)max 124 A;IR max 200u
31	1.5K9.1	6	Si	DO13	PP 1.5kW;Pd 1.0W;VR(wkg)7.37V;IR(surge)max 109 A;IR max 50u
32	1.5K9.1A	6	Si	DO13	PP 1.5kW;Pd 1.0W;VR(wkg)7.78V;IR(surge)max 112 A;IR max 50u
33	1.5K10	6	Si	DO13	PP 1.5kW;Pd 1.0W;VR(wkg)8.10V;IR(surge)max 100 A;IR max 10u
34	1.5K10A	6	Si	DO13	PP 1.5kW;Pd 1.0W;VR(wkg)8.55V;IR(surge)max 103 A;IR max 10u
35	1.5K11	6	Si	DO13	PP 1.5kW;Pd 1.0W;VR(wkg)8.92V;IR(surge)max 93 A;IR max 5.0u
36	1.5K11A	6	Si	DO13	PP 1.5kW;Pd 1.0W;VR(wkg)9.40V;IR(surge)max 96 A;IR max 5.0u
37	1.5K12	6	Si	DO13	PP 1.5kW;Pd 1.0W;VR(wkg) 9.72V;IR(surge)max 87A;IR max 5.0uA
38	1.5K12A	6	Si	DO13	PP 1.5kW;Pd 1.0W;VR(wkg) 10.2V;IR(surge) max 90A;IR max 5.0uA
39	1.5K13	6	Si	DO13	PP 1.5kW;Pd 1.0W;VR(wkg) 10.5V;IR(surge)max 79A;IR max 5.0uA
40	1.5K13A	6	Si	DO13	PP 1.5kW;Pd 1.0W;VR(wkg) 11.1V;IR(surge)max 82A;IR max 5.0uA
41	1.5K15	6	Si	DO13	PP 1.5kW;Pd 1.0W;VR(wkg) 12.1V;IR(surge)max 68A;IR max 5.0uA
42	1.5K15A	6	Si	DO13	PP 1.5kW;Pd 1.0W;VR(wkg) 12.8V;IR(surge)max 71A;IR max 5.0uA
43	1.5K16	6	Si	DO13	PP 1.5kW;Pd 1.0W;VR(wkg) 12.9V;IR(surge)max 64A;IR max 5.0uA
44	1.5K16A	6	Si	DO13	PP 1.5kW;Pd 1.0W;VR(wkg) 13.6V;IR(surge)max 67A;IR max 5.0uA
45	1.5K18	6	Si	DO13	PP 1.5kW;Pd 1.0W;VR(wkg) 14.5V;IR(surge) max 56.5A;IR max 5.0uA
46	1.5K18A	6	Si	DO13	pp 1.5kW;Pd 1.0W;VR(wkg) 15.3V;IR(surge)max 59.5A;IR max 5.0uA
47	1.5K20	6	Si	DO13	PP 1.5kW;Pd 1.0W;VR(wkg) 16.2V;IR(surge)max 51.5A;IR max 5.0uA
48	1.5K20A	6	Si	DO13	PP 1.5kW;Pd 1.0W;VR(wkg) 17.1V;IR(surge)max 54A;IR max 5.0uA
49	1.5K22	6	Si	DO13	PP 1.5 kW;Pd 1.0W;VR(wkg)17.8V;IR(surge)max 47A;IR max 5.0u
50	1.5K22A	6	Si	DO13	PP 1.5 kW;Pd 1.0W;vr(wkg)18.8V;IR(surge)max 49A;IR max 5.0u
51	1.5K24	6	Si	DO13	PP 1.5 kW;Pd 1.0W;VR(wkg)19.4V;IR(surge)max 43A;IR max 5.0u
52	1.5K24A	6	Si	DO13	PP 1.5 kW;Pd 1.0W;VR(wkg)20.5V;IR(surge)max 45A;IR max 5.0u
53	1.5K27	6	Si	DO13	PP 1.5 kW;Pd 1.0W;VR(wkg)21.8V;IR(surge)max 38.5A;IR max 5.0u
54	1.5K27A	6	Si	DO13	PP 1.5 kW;Pd 1.0W;VR(wkg)23.1V;IR(surge)max 40A;IR max 5.0u
55	1.5K30	6	Si	DO13	PP 1.5 kW;Pd 1.0W;VR(wkg)24.3V;IR(surge)max 34.5A;IR max 5.0u
56	1.5K30A	6	Si	DO13	PP 1.5 kW;Pd 1.0W;VR(wkg)25.6V;IR(surge)max 36A;IR max 5.0u
57	1.5K33	6	Si	DO13	PP 1.5 kW;Pd 1.0W;VR(wkg)26.8V;IR(surge)max 31.5A;IR max 5.0u
58	1.5K33A	6	Si	DO13	PP 1.5 kW;Pd 1.0W;VR(wkg)28.2V;IR(surge)max 33A;IR max 5.0u
59	1.5K36	6	Si	DO13	PP 1.5 kW;Pd 1.0W;VR(wkg)29.1V;IR(surge)max 29A;IR max 5.0u
60	1.5K36A	6	Si	DO13	PP 1.5 kW;Pd 1.0W;VR(wkg)30.8V;IR(surge)max 30A;IR max 5.0u
61	1.5K39	6	Si	DO13	PP 1.5 kW;Pd 1.0W;VR(wkg)31.6V;IR(surge)max 26.5A;IR max 5.0u
62	1.5K39A	6	Si	DO13	PP 1.5 kW;Pd 1.0W;vr(wkg)33.3V;IR(surge)max 28A;IR max 5.0u
63	1.5K43	6	Si	DO13	PP 1.5 kW;Pd 1.0W;VR(wkg)34.8V;IR(surge)max 24A;IR max 5.0u
64	1.5K43A	6	Si	DO13	PP 1.5 kW;Pd 1.0W;VR(wkg)36.8V;IR(surge)max 25.3A;IR max 5.0u
65	1.5K47	6	Si	DO13	PP 1.5 kW;Pd 1.0W;VR(wkg)38.1V;IR(surge)max 22.2A;IR max 5.0u
66	1.5K47A	6	Si	DO13	PP 1.5 kW;Pd 1.0W;VR(wkg)40.2V;IR(surge)max 23.2A;IR max 5.0u
67	1.5K51	6	Si	DO13	PP 1.5 kW;Pd 1.0W;VR(wkg)41.3V;IR(surge)max 20.4A;IR max 5.0u
68	1.5K51A	6	Si	DO13	PP 1.5 kW;Pd 1.0W;VR(wkg)43.6V;IR(surge)max 21.4A;IR max 5.0u
69	1.5K56	6	Si	DO13	PP 1.5 kW;Pd 1.0W;VR(wkg)45.4V;IR(surge)max 18.6A;IR max 5.0u
70	1.5K56A	6	Si	DO13	PP 1.5 kW;Pd 1.0W;VR(wkg)47.8V;IR(surge)max 19.5A;IR max 5.0u
71	1.5K62	6	Si	DO13	PP 1.5 kW;Pd 1.0W;VR(wkg)50.2V;IR(surge)max 16.9A;IR max 5.0u
72	1.5K62A	6	Si	DO13	PP 1.5 kW;Pd 1.0W;VR(wkg)53.0V;IR(surge)max 17.7A;IR max 5.0u
73	1.5K68	6	Si	DO13	PP 1.5 kW;Pd 1.0W;VR(wkg)55.1V;IR(surge)max 15.3A;IR max 5.0u
74	1.5K68A	6	Si	DO13	PP 1.5 kW;Pd 1.0W;vr(wkg)58.1V;IR(surge)max 16.3A;IR max 5.0u
75	1.5K75	6	Si	DO13	PP 1.5 kW;Pd 1.0W;VR(wkg)60.7V;IR(surge)max 13.9A;IR max 5.0u
76	1.5K75A	6	Si	DO13	PP 1.5 kW;Pd 1.0W;VR(wkg)64.1V;IR(surge)max 14.6A;IR max 5.0u
77	1.5K82	6	Si	DO13	PP 1.5 kW;Pd 1.0W;VR(wkg)66.4V;IR(surge)max 12.7A;IR max 5.0u
78	1.5K82A	6	Si	DO13	PP 1.5 kW;Pd 1.0W;VR(wkg)70.1V;IR(surge)max 13.3A;IR max 5.0u
79	1.5K91	6	Si	DO13	PP 1.5 kW;Pd 1.0W;VR(wkg)73.7V;IR(surge)max 11.4A;IR max 5.0u
80	1.5K91A	6	Si	DO13	PP 1.5 kW;Pd 1.0W;VR(wkg)77.8V;IR(surge)max 12.0A;IR max 5.0u
81	1.5K100	6	Si	DO13	PP 1.5 kW;Pd 1.0W;VR(wkg)81.0V;IR(surge)max 10.4A;IR max 5.0u
82	1.5K100A	6	Si	DO13	PP 1.5 kW;Pd 1.0W;VR(wkg)85.5V;IR(surge)max 11.0A;IR max 5.0u
83	1.5K110	6	Si	DO13	PP 1.5 kW;Pd 1.0W;VR(wkg)89.2V;IR(surge)max 9.5A;IR max 5.0u
84	1.5K110A	6	Si	DO13	PP 1.5 kW;Pd 1.0W;VR(wkg)94.0V;IR(surge)max 9.9A;IR max 5.0u
85	1.5K120	6	Si	DO13	PP 1.5 kW;Pd 1.0W;VR(wkg)97.2V;IR(surge)max 8.7A;IR max 5.0u
86	1.5K120A	6	Si	DO13	PP 1.5 kW;Pd 1.0W;vr(wkg)102V;IR(surge)max 9.1A;IR max 5.0u
87	1.5K130	6	Si	DO13	PP 1.5 kW;Pd 1.0W;VR(wkg)105V;IR(surge)max 8.0A;IR max 5.0u
88	1.5K130A	6	Si	DO13	PP 1.5 kW;Pd 1.0W;VR(wkg)111V;IR(surge)max 8.4A;IR max 5.0u
89	1.5K150	6	Si	DO13	PP 1.5 kW;Pd 1.0W;VR(wkg)121V;IR(surge)max 7.0A;IR max 5.0u
90	1.5K150A	6	Si	DO13	PP 1.5 kW;Pd 1.0W;VR(wkg)128V;IR(surge)max 7.2A;IR max 5.0u
91	1.5K160	6	Si	DO13	PP 1.5 kW;Pd 1.0W;VR(wkg)130V;IR(surge)max 6.5A;IR max 5.0u
92	1.5K160A	6	Si	DO13	PP 1.5 kW;Pd 1.0W;VR(wkg)136V;IR(surge)max 6.8A;IR max 5.0u
93	1.5K170	6	Si	DO13	PP 1.5 kW;Pd 1.0W;VR(wkg)138V;IR(surge)max 6.2A;IR max 5.0u
94	1.5K170A	6	Si	DO13	PP 1.5 kW;Pd 1.0W;VR(wkg)145V;IR(surge)max 6.4A;IR max 5.0u
95	1.5K180	6	Si	DO13	PP 1.5 kW;Pd 1.0W;VR(wkg)146V;IR(surge)max 5.8A;IR max 5.0u
96	1.5K180A	6	Si	DO13	PP 1.5 kW;Pd 1.0W;VR(wkg)154V;IR(surge)max 6.1A;IR max 5.0u
97	1.5K200	6	Si	DO13	PP 1.5 kW;Pd 1.0W;VR(wkg)162V;IR(surge)max 5.2A;IR max 5.0u
98	1.5K200A	6	Si	DO13	PP 1.5 kW;Pd 1.0W;VR(wkg)171V;IR(surge)max 5.5A;IR max 5.0u
99	1.5KC6.8	6	Si	F130	VR 5.50V;VB 6.12-7.48V at IT 10mA;IR 1.0mAmax;IPP 139A;TC .057%/°C
100	1.5KC6.8A	6	Si	F130	VR 5.80V;VB 6.45-7.14V at IT 10mA;IR 1.0mAmax;IPP 143A;TC .057%/°C
101	1.5KC7.5	6	Si	F130	VR 6.05V;VB 6.75-8.25V at IT 10mA;IR 500uAmax;IPP 128A;TC .061%/°C
102	1.5KC7.5A	6	Si	F130	VR 6.40V;VB 7.13-7.88V at IT 10mA;IR 500uAmax;IPP 132A;TC .061%/°C
103	1.5KC7.5C	6	Si	F130	VC 11.7V max;VR 6.05V;BV 8.25V max at 10mA;Temp 175°C max Oper.
104	1.5KC7.5CA	6	Si	F130	VC 11.3Vmax;VR 6.40V;BV 7.88Vmax at 10mA;Temp 175°C max Oper
105	1.5KC8.2	6	Si	F130	VR 6.63V;VB 7.38-9.02V at IT 10mA;IR 200uAmax;IPP 120A;TC .065%/°C
106	1.5KC8.2A	6	Si	F130	VR 7.02V;VB 7.79-8.61V at IT 10mA;IR 200uAmax;IPP 124A;TC .065%/°C
107	1.5KC8.2C	6	Si	A298ar	VC 12.5V max;VR 6.63V;BV 9.02Vmax at 10mA;Temp 175°C max Oper
108	1.5KC8.2CA	6	Si	A298ar	VC 12.1V max;VR 7.02V;BV 8.61Vmax at 10mA;Temp 175°C max Oper
109	1.5KC9.1	6	Si	F130	VR 7.37V;VB 8.19-10.0V at IT 1.0mA;IR 50uAmax;IPP 109A;TC .068%/°C
110	1.5KC9.1A	6	Si	F130	VR 7.78V;VB 8.65-9.55V at IT 1.0mA;IR 50uAmax;IPP 112A;TC .068%/°C

SYMBOLS AND CODES EXPLAINED IN INTERPRETER

7. TRANSIENT SUPPRESSOR DIODES - Bipolar & Unipolar Types (Cont'd)

IN ORDER OF (1) TYPE (2) MAT AND (3) TYPE NO.

LINE No.	3 TYPE NUMBER	1 TYPE	2 MAT.	DWG. NO.	DESCRIPTION
1	1.5KC9.1C	6	Si	A298ar	VC 13.8V max;VR 7.37V;BV 10V max at 10mA;Temp 175°C max Oper
2	1.5KC9.1CA	6	Si	A298ar	VC 13.4V max;VR 7.78V;BV 9.55Vmax at 10mA;Temp 175°C max Oper
3	1.5KC10	6	Si	F130	VR 8.10V;VB 9.00-11.0V at IT 1.0mA;IR 10uAmax;IPP 100A;TC .073%/°C
4	1.5KC10A	6	Si	F130	VR 8.55V;VB 9.5-10.5V at IT 1.0mA;IR 10uAmax;IPP 103A;TC .073%/°C
5	1.5KC10C	6	Si	A298ar	VC 15V max;VR 8.10V;BV 11V maxat 10mA;Temp 175°C max Oper
6	1.5KC10CA	6	Si	A298ar	VC 14.5V max;VR 8.55V;BV 10.5Vmax at 10mA;Temp 175°C max Oper
7	1.5KC11	6	Si	F130	VR 8.92V;VB 9.9-12.1V at IT 1.0mA;IR 5.0uAmax;IPP 93A;TC .075%/°C
8	1.5KC11A	6	Si	F130	VR 9.40V;VB 10.5-11.6V at IT 1.0mA;IR 5.0uAmax;IPP 96A;TC .075%/°C
9	1.5KC11C	6	Si	A298ar	VC16.2V max;VR8.92V;BV12.1V max at 1.0mA;Temp 175°C max Oper
10	1.5KC11CA	6	Si	A298ar	VC 16.2Vmax;VR 8.92V;BV 12.1Vmax at 1.0mA;Temp 175°C max Oper
11	1.5KC12	6	Si	F130	Max Clamping Volt 17.3V at Ipp 87A;BV Range 10.8/13.2V at IT 1.0mA
12	1.5KC12A	6	Si	F130	Max Clamping Volt 16.7V at Ipp 90A;BV Range 11.4/12.6V at IT 1.0mA
13	1.5KC13	6	Si	F130	Max Clamping Volt 19V at Ipp 79A; BV Range 11.7/14.3V at IT 1.0mA
14	1.5KC13A	6	Si	F130	Max Clamping Volt 18.2V at Ipp 82A; BV Range 12.4/13.7V at IT 1.0mA
15	1.5KC15	6	Si	F130	Max Clamping Volt 22V at Ipp 68A; BV Range 13.5/16.5V at IT 1.0mA
16	1.5KC15A	6	Si	F130	Max Clamping Volt 21.2V at Ipp 71A; BV Range 14.3/15.8V at IT 1.0mA
17	1.5KC16	6	Si	F130	Max Clamping Volt 23.5V at Ipp 64A; BV Range 14.4/17.6V at IT 1.0mA
18	1.5KC16A	6	Si	F130	Max Clamping Volt 22.5V at Ipp 67A;BV Range 15.2/16.8V at IT 1.0mA
19	1.5KC18	6	Si	F130	Max Cleaning Volt 26.5V at Ipp 56.5A;BV Range 16.2/19.8V at IT 1.0mA
20	1.5KC18A	6	Si	F130	Max Clamping Volt 25.2V at Ipp 59.5A; BV Range 17.1/18.9V at IT 1.0mA
21	1.5KC20	6	Si	F130	Max Clamping Volt 29.1V at Ipp 51.5A; BV Range 18/22V at IT 1.0mA
22	1.5KC20A	6	Si	F130	Max Clamping Volt 27.7V at Ipp 54A; BV Range 19/21V at IT 1.0mA
23	1.5KC22	6	Si	F130	Max Clamping Volt 31.9V at Ipp 47A; BV Range 19.8/24.2V at IT 1.0mA
24	1.5KC22A	6	Si	F130	Max Clamping Volt 30.6V at Ipp 49A; BV Range 20.9/23.1V at IT 1.0mA
25	1.5KC24	6	Si	F130	Max Clamping Volt 34.7V at Ipp 43A; BV Range 21.6/26.4V at IT 1.0mA
26	1.5KC24A	6	Si	F130	Max Clamping Volt 33.2V at Ipp 45A; BV Range 22.8/25.2V at IT 1.0mA
27	1.5KC27	6	Si	F130	Max Clamping Volt 39.1V at Ipp 38.5A; BV Range 24.3/297V at IT 1.0mA
28	1.5KC27A	6	Si	F130	Max Clamping Volt 37.5V at Ipp 40A; BV Range 25.7/28.4V at IT 1.0mA
29	1.5KC30	6	Si	F130	Max Clamping Volt 43.5V at Ipp 34.5A; BV Range 27/33V at IT 1.0mA
30	1.5KC30A	6	Si	F130	Max Clamping Volt 41.4V at Ipp 36A; BV Range 28.5/31.5V at IT 1.0mA
31	1.5KC33	6	Si	F130	Max Clamping Volt 47.7V at Ipp 31.5A; BV Range 29.7/36.3V at IT 1.0mA
32	1.5KC33A	6	Si	F130	Max Clamping Volt 45.7V at Ipp 33A; BV Range 31.4/34.7V at IT 1.0mA
33	1.5KC36	6	Si	F130	Max Clamping Volt 52V at Ipp 29A; BV Range 32.4/39.6V at IT 1.0mA
34	1.5KC36A	6	Si	F130	Max Clamping Volt 49.9V at Ipp 30A; BV Range 34.2/37.8V at IT 1.0mA
35	1.5KC39	6	Si	F130	Max Clamping Volt 56.4V at Ipp 26.5A; BV Range 35.1/42.9V at IT 1.0mA
36	1.5KC39A	6	Si	F130	Max Clamping Volt 53.9V at Ipp 28A;BV Range 37.1/41V at IT 1.0mA
37	1.5KC43	6	Si	F130	Max Clamping Volt 61.9V at Ipp 24A; BV Range 38.7/47.3V at IT 1.0mA
38	1.5KC43A	6	Si	F130	Max Clamping Volt 59.3V at Ipp 25.3A; BV Range 40.9/45.2V at IT 1.0mA
39	1.5KC47	6	Si	F130	Max Clamping Volt 67.8V at Ipp 22.2A; BV Range 42.3/51.7V atIT 1.0mA
40	1.5KC47A	6	Si	F130	Max Clamping Volt 64.8V at Ipp 23.2A; BV Range 44.7/49.4V atIT 1.0mA
41	1.5KC51	6	Si	F130	Max Clamping Volt 73.5V at Ipp 20.4A; BV Range 45.9/56.1V at IT 1.0mA
42	1.5KC51A	6	Si	F130	Max Clamping Volt 70.1V at Ipp 21.4A; BV Range 48.5/53.6V at IT 1.0mA
43	1.5KC56	6	Si	F130	Max Clamping Volt 80.5V at Ipp 18.6A; BV Range 50.4/61.6V at IT 1.0mA
44	1.5KC56A	6	Si	F130	Max Clamping Volt 77V at Ipp 19.5A; BV Range 53.2/58.8V at IT 1.0mA
45	1.5KC62	6	Si	F130	Max Clamping Volt 89V at Ipp 16.9A; BV Range 58.8/68.2V at IT 1.0mA
46	1.5KC62A	6	Si	F130	Max Clamping Volt 85V at Ipp 17.7A;BV Range 58.9/65.1V at IT 1.0mA
47	1.5KC68	6	Si	F130	Max Clamping Volt 98V at Ipp 15.3A; BV Range 61.2/74.8V at IT 1.0mA
48	1.5KC68A	6	Si	F130	Max Clamping Volt 92V at Ipp 16.3A; BV Range 64.6/71.4V at IT 1.0mA
49	1.5KC75	6	Si	F130	Max Clamping Volt 108V at Ipp 13.9A;BV Range 67.5/82.5V at IT 1.0mA
50	1.5KC75A	6	Si	F130	Max Clamping Volt 103V at Ipp 14.6A; BV Range 71.3/78.8V at IT 1.0mA
51	1.5KC82	6	Si	F130	Max Clamping Volt 118V at Ipp 12.7A; BV Range 73.8/90.2V at IT 1.0mA
52	1.5KC82A	6	Si	F130	Max Clamping Volt 113V at Ipp 13.3A; BV Range 77.9/86.1V at IT 1.0mA
53	1.5KC91	6	Si	F130	Max Clamping Volt 131V at Ipp 11.4A; BV Range 81.9/100V at IT 1.0mA
54	1.5KC91A	6	Si	F130	Max Clamping Volt 125V at Ipp 12A; BV Range 86.5/95.5V at IT 1.0mA
55	1.5KC100	6	Si	F130	Max Clamping Volt 144V at Ipp 10.4A; BV Range 90/110V at IT 1.0mA
56	1.5KC100A	6	Si	F130	Max Clamping Volt 137V at Ipp 11A;BV Range 95/105V at IT 1.0mA
57	1.5KC110	6	Si	F130	Max Clamping Volt 158V at Ipp 9.5A;BV Range 99/121V at IT 1.0mA
58	1.5KC110A	6	Si	F130	Max Clamping Volt 152V at Ipp 9.9A; BV Range 105/116V at IT 1.0mA
59	1.5KE6.8	6	Si	A298ar	IR 1.0mA at 5.5VRWM;7.48V(BR) max at IR 10mA;V(CL) 10.8V at Ipp 139A
60	1.5KE6.8A	6	Si	A298ar	IR 1.0mA at 5.8VRWM;7.14V(BR) max at IR 10mA;V(CL) 10.5V at Ipp 143A
61	1.5KE7.5	6	Si	A298ar	IR 500uA at 6.05VRWM;8.25V(BR) max at IR 10mA;V(CL) 11.7V at Ipp 128A
62	1.5KE7.5A	6	Si	A298ar	IR 500uA at 6.40VRWM;7.88V(BR) max at IR 10mA;V(CL) 11.3V at Ipp 132A
63	1.5KE7.5C	6	Si	A298ar	VC 11.7V max;VR 6.05V;BV 8.25Vmax at 10mA;Temp 175°C max Operr
64	1.5KE7.5CA	6	Si	A298ar	VC 11.3V max;VR 6.40V;BV 7.88Vmax at 10mA;Temp 175°C max Oper
65	1.5KE8.2	6	Si	A298ar	IR 200uA at 6.63VRWM;9.02V(BR) max at IR 10mA;V(CL) 12.5V at Ipp 120A
66	1.5KE8.2A	6	Si	A298ar	IR 200uA at 7.02VRWM;8.61V(BR) max at IR 10mA;V(CL) 12.1V at Ipp 124A
67	1.5KE8.2C	6	Si	A298ar	VC 12.5V max;VR 6.63V;BV 9.02Vmax at 10mA;Temp 175°C max Oper
68	1.5KE8.2CA	6	Si	A298ar	VC 12.1V max;VR 7.02V;BV 8.61Vmax at 10mA;Temp 175°C max Oper
69	1.5KE9.1	6	Si	A298ar	IR 50uA at 7.37VRWM;10.0V(BR) max at IR 1.0mA;V(CL) 13.8V at Ipp 109A
70	1.5KE9.1A	6	Si	A298ar	IR 50A at 7.78VRWM;9.55V(BR) max at IR 1.0mA;V(CL) 13.4V at Ipp 112A
71	1.5KE9.1C	6	Si	A298ar	VC 13.8V max;VR 7.37V;BV 10V max at 1.0mA;Temp 175°C max Oper
72	1.5KE9.1CA	6	Si	A298ar	VC 13.4V max;VR 7.78V;BV 9.55Vmax at 1.0mA;Temp 175°C max Oper
73	1.5KE10	6	Si	A298ar	IR 10uA at 8.10VRWM;11.0V(BR) max at IR 1.0mA;15.0V(CL) at Ipp 100A
74	1.5KE10A	6	Si	A298ar	IR 10uA at 8.55VRWM;10.5V(BR) max at IR 1.0mA;14.5V(CL) at Ipp 103A
75	1.5KE10C	6	Si	A298ar	VC15V max;VR 8.10V;BV11V max at 1.0mA;Temp 175°C max Oper
76	1.5KE10CA	6	Si	A298ar	VC 14.5V max;VR 8.55V;BV 10.5Vmax at 1.0mA;Temp 175°C max Oper
77	1.5KE11	6	Si	A298ar	IR 5.0uA at 8.92VRWM;12.1V(BR) max at IR 1.0mA;16.2V(CL) at Ipp 93A
78	1.5KE11A	6	Si	A298ar	IR 5.0uA at 9.40VRWM;11.6V(BR) max at IR 1.0mA;15.6V(CL) at Ipp 96A
79	1.5KE11C	6	Si	A298ar	VC 16.2V max;VR 8.92V;BV 12.1Vmax at 1.0mA;Temp 175°C max Oper
80	1.5KE11CA	6	Si	A298ar	VC 15.6V max;VR 9.40V;BV 11.6Vmax at 1.0mA;Temp 175°C max Oper
81	1.5KE12	6	Si	A298ar	IR 5.0uA at 9.72VRWM;13.2V(BR) max at IR 1.0mA;17.3V(CL) at Ipp 87A
82	1.5KE12A	6	Si	A298ar	IR 5.0uA at 10.2VRWM;12.6V(BR) max at IR 1.0mA;16.7V(CL) at Ipp 90A
83	1.5KE13	6	Si	A298ar	IR 5.0uA at 10.5VRWM;14.3V(BR) max at IR 1.0mA;19.0V(CL) at Ipp 79A
84	1.5KE13A	6	Si	A298ar	IR 5.0uA at 11.1VRWM;13.7V(BR) max at IR 1.0mA;18.2V(CL) at Ipp 82A
85	1.5KE15	6	Si	A298ar	IR 5.0uA at 12.1VRWM;16.5V(BR) max at IR 1.0mA;22.0V(CL) at Ipp 68A
86	1.5KE15A	6	Si	A298ar	IR 5.0uA at 12.8VRWM;15.8V(BR) max at IR 1.0mA;21.2V(CL) at Ipp 71A
87	1.5KE16	6	Si	A298ar	IR 5.0uA at 12.9VRWM;17.6V(BR) max at IR 1.0mA;23.5V(CL) at Ipp 64A
88	1.5KE16A	6	Si	A298ar	IR 5.0uA at 13.6VRWM;16.8V(BR) max at IR 1.0mA;22.5V(CL) at Ipp 67A
89	1.5KE18	6	Si	A298ar	IR 5.0uA at 14.5VRWM;19.8V(BR) max at IR 1.0mA;26.5V(CL) at Ipp 56.5A
90	1.5KE18A	6	Si	A298ar	IR 5.0uA at 15.3VRWM;18.9V(BR) max at IR 1.0mA;25.2V(CL) at Ipp 59.5A
91	1.5KE20	6	Si	A298ar	IR 5.0uA at 16.2VRWM;22.0V(BR) max at IR 1.0mA;29.1V(CL) at Ipp 51.5A
92	1.5KE20A	6	Si	A298ar	IR 5.0uA at 17.1VRWM;21.0V(BR) max at IR 1.0mA;27.7V(CL) at Ipp 54A
93	1.5KE22	6	Si	A298ar	IR 5.0uA at 17.8VRWM;24.2V(BR) max at IR 1.0mA;31.9V(CL) at Ipp 47A
94	1.5KE22A	6	Si	A298ar	IR 5.0uA at 18.8VRWM;23.1V(BR) max at IR 1.0mA;30.6V(CL) at Ipp 49A
95	1.5KE24	6	Si	A298ar	IR 5.0uA at 19.4VRWM;26.4V(BR) max at IR 1.0mA;34.7V(CL) at Ipp 43A
96	1.5KE24A	6	Si	A298ar	IR 5.0uA at 20.5VRWM;25.2V(BR) max at IR 1.0mA;33.2V(CL) at Ipp 45A
97	1.5KE27	6	Si	A298ar	IR 5.0uA at 21.8VRWM;29.7V(BR) max at IR 1.0mA;39.1V(CL) at Ipp 38.5A
98	1.5KE27A	6	Si	A298ar	IR 5.0uA at 23.1VRWM;28.4V(BR) max at IR 1.0mA;37.5V(CL) at Ipp 40A
99	1.5KE30	6	Si	A298ar	IR 5.0uA at 24.3VRWM;33.0V(BR) max at IR 1.0mA;43.5V(CL) at Ipp 34.5A
100	1.5KE30A	6	Si	A298ar	IR 5.0uA at 25.6VRWM;31.5V(BR) max at IR 1.0mA;41.4V(CL) at Ipp 36A
101	1.5KE33	6	Si	A298ar	IR 5.0uA at 26.8VRWM;36.3V(BR) max at IR 1.0mA;47.7V(CL) at Ipp 31.5A
102	1.5KE33A	6	Si	A298ar	IR 5.0uA at 28.2VRWM;34.7V(BR) max at IR 1.0mA;45.7V(CL) at Ipp 33A
103	1.5KE36	6	Si	A298ar	IR 5.0uA at 29.1VRWM;39.6V(BR) max at IR 1.0mA;52.0V(CL) at Ipp 29A
104	1.5KE36A	6	Si	A298ar	IR 5.0uA at 30.8VRWM;37.8V(BR) max at IR 1.0mA;49.9V(CL) at Ipp 30A
105	1.5KE39	6	Si	A298ar	IR 5.0uA at 31.6VRWM;42.9V(BR) max at IR 1.0mA;56.4V(CL) at Ipp 26.5A
106	1.5KE39A	6	Si	A298ar	IR 5.0uA at 33.3VRWM;41.0V(BR) max at IR 1.0mA;53.9V(CL) at Ipp 28.0A
107	1.5KE43	6	Si	A298ar	IR 5.0uA at 34.8VRWM;47.3V(BR) max at IR 1.0mA;61.9V(CL) at Ipp 24.0A
108	1.5KE43A	6	Si	A298ar	IR 5.0uA at 36.8VRWM;45.2V(BR) max at IR 1.0mA;59.3V(CL) at Ipp 25.3A
109	1.5KE47	6	Si	A298ar	IR 5.0uA at 38.1VRWM;51.7V(BR) max at IR 1.0mA;67.8V(CL) at Ipp 22.2A
110	1.5KE47A	6	Si	A298ar	IR 5.0uA at 40.2VRWM;49.4V(BR) max at IR 1.0mA;64.8V(CL) at Ipp 23.2A

SYMBOLS AND CODES EXPLAINED IN INTERPRETER

7. TRANSIENT SUPPRESSOR DIODES - Bipolar & Unipolar Types (Cont'd)

IN ORDER OF (1) TYPE (2) MAT AND (3) TYPE NO.

LINE No.	3 TYPE NUMBER	1 TYPE	2 MAT.	DWG. NO.	DESCRIPTION
1	1.5KE51	6	Si	A298ar	IR 5.0uA at 41.3VRWM;56.1V(BR) max at IR 1.0mA;73.5V(CL) at Ipp 20.4A
2	1.5KE51A	6	Si	A298ar	IR 5.0uA at 43.6VRWM;53.6V(BR) max at IR 1.0mA;70.1V(CL) at Ipp 21.4A
3	1.5KE56	6	Si	A298ar	IR 5.0uA at 45.4VRWM;61.6V(BR) max at IR 1.0mA;80.5V(CL) at Ipp 18.6A
4	1.5KE56A	6	Si	A298ar	IR 5.0uA at 47.8VRWM;58.8V(BR) max at IR 1.0mA;77.0V(CL) at Ipp 19.5A
5	1.5KE62	6	Si	A298ar	IR 5.0uA at 50.2VRWM;68.2V(BR) max at IR 1.0mA;89.0V(CL) at Ipp 16.9A
6	1.5KE62A	6	Si	A298ar	IR 5.0uA at 53.0VRWM;65.1V(BR) max at IR 1.0mA;85.0V(CL) at Ipp 17.7A
7	1.5KE68	6	Si	A298ar	IR 5.0uA at 55.1VRWM;74.8V(BR) max at IR 1.0mA;98.0V(CL) at Ipp 15.3A
8	1.5KE68A	6	Si	A298ar	IR 5.0uA at 58.1VRWM;71.4V(BR) max at IR 1.0mA;92.0V(CL) at Ipp 16.3A
9	1.5KE75	6	Si	A298ar	IR 5.0uA at 60.7VRWM;82.5V(BR) max at IR 1.0mA;108.0V(CL) at Ipp 13.9A
10	1.5KE75A	6	Si	A298ar	IR 5.0uA at 64.1VRWM;78.8V(BR) max at IR 1.0mA;103.0V(CL) at Ipp 14.6A
11	1.5KE82	6	Si	A298ar	IR 5.0uA at 66.4VRWM;90.2V(BR) max at IR 1.0mA;118.0V(CL) at Ipp 12.7A
12	1.5KE82A	6	Si	A298ar	IR 5.0uA at 70.1VRWM;86.1V(BR) max at IR 1.0mA;113.0V(CL) at Ipp 13.3A
13	1.5KE91	6	Si	A298ar	IR 5.0uA at 73.7VRWM;100V(BR) max at IR 1.0mA;131.0V(CL) at Ipp 11.4A
14	1.5KE91A	6	Si	A298ar	IR 5.0uA at 77.8VRWM;95.5V(BR) max at IR 1.0mA;125.0V(CL) at Ipp 12.0A
15	1.5KE100	6	Si	A298ar	IR 5.0uA at 81.0VRWM;110V(BR) max at IR 1.0mA;144.0V(CL) at Ipp 10.4A
16	1.5KE100A	6	Si	A298ar	IR 5.0uA at 85.5VRWM;105V(BR) max at IR 1.0mA;137.0V(CL) at Ipp 11.0A
17	1.5KE110	6	Si	A298ar	IR 5.0uA at 89.2VRWM;121V(BR) max at IR 1.0mA;158.0V(CL) at Ipp 9.5A
18	1.5KE110A	6	Si	A298ar	IR 5.0uA at 94.0VRWM;116V(BR) max at IR 1.0mA;152.0V(CL) at Ipp 9.9A
19	1.5KE120	6	Si	A298ar	IR 5.0uA at 97.2VRWM;132V(BR) max at IR 1.0mA;173.0V(CL) at Ipp 8.7A
20	1.5KE120A	6	Si	A298ar	IR 5.0uA at 102VRWM;126V(BR) max at IR 1.0mA;165.0V(CL) at Ipp 9.1A
21	1.5KE130	6	Si	A298ar	IR 5.0uA at 105VRWM;143V(BR) max at IR 1.0mA;187.0V(CL) at Ipp 8.0A
22	1.5KE130A	6	Si	A298ar	IR 5.0uA at 111VRWM;137V(BR) max at IR 1.0mA;179.0V(CL) at Ipp 8.4A
23	1.5KE150	6	Si	A298ar	IR 5.0uA at 121VRWM;165V(BR) max at IR 1.0mA;215.0V(CL) at Ipp 7.0A
24	1.5KE150A	6	Si	A298ar	IR 5.0uA at 128VRWM;158V(BR) max at IR 1.0mA;207.0V(CL) at Ipp 7.2A
25	1.5KE160	6	Si	A298ar	IR 5.0uA at 130VRWM;176V(BR) max at IR 1.0mA;230.0V(CL) at Ipp 6.5A
26	1.5KE160A	6	Si	A298ar	IR 5.0uA at 136VRWM;168V(BR) max at IR 1.0mA;219.0V(CL) at Ipp 6.8A
27	1.5KE170	6	Si	A298ar	IR 5.0uA at 138VRWM;187V(BR) max at IR 1.0mA;244.0V(CL) at Ipp 6.2A
28	1.5KE170A	6	Si	A298ar	IR 5.0uA at 145VRWM;179V(BR) max at IR 1.0mA;234.0V(CL) at Ipp 6.4A
29	1.5KE180	6	Si	A298ar	IR 5.0uA at 146VRWM;198V(BR) max at IR 1.0mA;258.0V(CL) at Ipp 5.8A
30	1.5KE180A	6	Si	A298ar	IR 5.0uA at 154VRWM;189V(BR) max at IR 1.0mA;246.0V(CL) at Ipp 6.1A
31	1.5KE200	6	Si	A298ar	IR 5.0uA at 162VRWM;220V(BR) max at IR 1.0mA;287.0V(CL) at Ipp 5.2A
32	1.5KE200A	6	Si	A298ar	IR 5.0uA at 171VRWM;210V(BR) max at IR 1.0mA;274.0V(CL) at Ipp 5.5A
33	1.5KE220	6	Si	A69g	VR175V;VB 198-242V at IT 1 mA;IR 5uA max;IPP 4.3A max;TC .108%/°C
34	1.5KE220A	6	Si	A69g	VR185V;VB209-231V at IT 1 mA;IR 5uA max;IPP 4.6A max;TC .108%/°C
35	1.5KE250	6	Si	A69g	VR202V;VB225-275V at IT 1 mA;IR 5uA max;IPP 5.0A max;TC .110%/°C
36	1.5KE250A	6	Si	A69g	VR214V;VB237-263V at IT 1 mA;IR 5uA max;IPP 5.0A max;TC .110%/°C
37	1.5KE300	6	Si	A69g	VR243V;VB270-330V at IT 1 mA;IR 5uA max;IPP 5.0A max;TC .110%/°C
38	1.5KE300A	6	Si	A69g	VR256V;VB285-315V at IT 1 mA;IR 5uA max;IPP 5.0A max;TC .110%/°C
39	1.5KE350	6	Si	A69g	VR284V;VB315-385V at IT 1 mA;IR 5uA max;IPP 4.0A max;TC .110%/°C
40	1.5KE350A	6	Si	A69g	VR300V;VB333-368V at IT 1 mA;IR 5uA max;IPP 4.0A max;TC .110%/°C
41	1.5KE400	6	Si	A69g	VR324V;VB360-440V at IT 1 mA;IR 5uA max;IPP 4.0A max;TC .110%/°C
42	1.5KE400A	6	Si	A69g	VR342V;VB380-420V at IT 1 mA;IR 5uA max;IPP 4.0A max;TC .110%/°C
43	1.5S220	6	Si	DO13	VR175V;VBR198-242V;It1.0mA;Vc344VatIp4.3A;IR5.0A
44	1.5S220A	6	Si	DO13	VR185V;VBR209-231V;It1.0mA;Vc328VatIp4.6A;IR5.0A
45	1.5S250	6	Si	DO13	VR202V;VBR225-275V;It1.0mA;Vc360VatIp5.0A;IR5.0A
46	1.5S250A	6	Si	DO13	VR214V;VBR237-253V;It1.0mA;Vc344VatIp5.0A;IR5.0A
47	1.5S300	6	Si	DO13	VR243V;VBR270-330V;It1.0mA;Vc430VatIp5.0A;IR5.0A
48	1.5S300A	6	Si	DO13	VR256V;VBR285-315V;It1.0mA;Vc414VatIp5.0A;IR5.0A
49	1.5S350	6	Si	DO13	VR284V;VBR315-385V;It1.0mA;Vc504VatIp4.0A;IR5.0A
50	1.5S350A	6	Si	DO13	VR300V;VBR333-368V;It1.0mA;Vc482VatIp4.0A;IR5.0A
51	1.5S400	6	Si	DO13	VR324V;VBR360-440V;It1.0mA;Vc574VatIp4.0A;IR5.0A
52	1.5S400A	6	Si	DO13	VR342V;VBR380-420V;It1.0mA;Vc548VatIp4.0A;IR5.0A
53	1.5SE7.5	6	Si	A69g	VR 6.05V;VB 6.75-8.25V at IT 10mA;IR 500uA max;IPP 128A;TC .061%/°C
54	1.5SE7.5A	6	Si	A69g	VR 6.4V;VB 7.13-7.88V at IT 10mA;IR 500uA max;IPP 132A;TC .061%/°C
55	1.5SE8.2	6	Si	A69g	VR 6.63V;VB 7.38-9.02V at IT 10mA;IR 200uA max;IPP 120A;TC .065%/°C
56	1.5SE8.2A	6	Si	A69g	VR 7.02V;VB 7.79-8.61V at IF 10mA;IR 200uA max;IPP 124A;TC .065%/°C
57	1.5SE10	6	Si	A69g	VR 8.10V;VB 9-11V at IT 1mA;IR 50uA max;IPP 100A;TC .073%/°C
58	1.5SE12	6	Si	A69g	VR 9.72V;VB10.8-13.2V at IT 1mA;IR 5uA max;IPP 87A;TC .078%/°C
59	1.5SE12A	6	Si	A69g	VR 10.2V;VB 11.4-12.6V at IT 1mA;IR 5uA max;IPP 90A;TC .078%/°C
60	1.5SE13	6	Si	A69g	VR 10.5V;VB 11.7-14.3V at IT 1mA;IR 5uA max;IPP 79A;TC .081%/°C
61	1.5SE13A	6	Si	A69g	VR 11.1V;VB12.4-13.7V at IT 1mA;IR 5uA max;IPP 82A;TC .081%/°C
62	1.5SE15A	6	Si	A69g	VR 12.8V;VB 14.3-15.8V at IT 1mA;IR 5uA max;IPP 71A;TC .084%/°C
63	1.5SE18	6	Si	A69g	VR 14.5V;VB 16.2-19.8V at IT 1mA;IR 5uA max;IPP 56.5;TC .088%/°C
64	1.5SE18A	6	Si	A69g	VR 15.3V;VB 17.1-18V at IT 1mA;IR 5uA max;IPP 59.5A;TC .088%/°C
65	1.5SE20	6	Si	A69g	VR 16.2V;VB 18-22V at IT 1mA;IR 5uA max;IPP 51.5A;TC .090%/°C
66	1.5SE20A	6	Si	A69g	VR 17.1V;VB 19-21V at IT 1mA;IR 5uA max;IPP 54A;TC .090%/°C
67	1.5SE22	6	Si	A69g	VR 17.8V;VB 19.8-24.2V at IT 1mA;IR 5uA max;IPP 47A;TC .092%/°C
68	1.5SE22A	6	Si	A69g	VR 18.8V;VB 20.9-23.1V at IT 1mA;IR 5uA max;IPP 49A;TC .092%/°C
69	1.5SE30A	6	Si	A69g	VR 25.6V;VB 28.5-31.5V at IT 1mA;IR 5uA max;IPP 36A;TC .097%/°C
70	1.5SE33	6	Si	A69g	VR 26.8V;VB 29.7-36.3V at IT 1mA;IR 5uA max;IPP 31.5A;TC .098%/°C
71	1.5SE36	6	Si	A69g	VR 29.1V;VB 32.4-39.6V at IT 1mA;IR 5uA max;IPP 39A;TC .099%/°C
72	1.5SE39A	6	Si	A69g	VR 33.3V;VB37.1-41V at IT 1mA;IR 5uA max;IPP 28A;TC .100%/°C
73	1.5SE43A	6	Si	A69g	VR 36.8V;VB 40.9-45.2V at IT 1mA;IR 5uA max;IPP 25.3A;TC .101%/°C
74	1.5SE47A	6	Si	A69g	VR 40.2V;VB44.7-49.4V at IT 1mA;IR 5uA max;IPP 23.2A;TC .101%/°C
75	1.5SE56	6	Si	A69g	VR 45.4V;VB 50.4-61.6V at IT 1mA;IR 5uA max;IPP 18.6A;TC .103%/°C
76	1.5SE56A	6	Si	A69g	VR 47.8V;VB 53.2-58.8V at IT 1mA;IR 5uA max;IPP 19.5A;TC .103%/°C
77	1.5SE62A	6	Si	A69g	VR 53V;VB 58.9-65.1V at IT 1mA;IR 5uA max;IPP 17.7A;TC .104%/°C
78	1.5SE75	6	Si	A69g	VR 60.7V;VB67.5-82.5V at IT 1mA;IR 5uA max;IPP 13.9A;TC .105%/°C
79	1.5SE75A	6	Si	A69g	VR 64.1V;VB 71.3-78.8V at IT 1mA;IR 5uA max;IPP 14.6A;TC .105%/°C
80	1.5SE82	6	Si	A69g	VR 66.4V;VB 73.8-90.2V at IT 1mA;IR 5uA max;IPP 12.7A;TC .105%/°C
81	1.5SE91	6	Si	A69g	VR 73.7V;VB81.9-100V at IT 1mA;IR 5uA max;IPP 11.4A;TC .106%/°C
82	1.5SE91A	6	Si	A69g	VR 77.8V;VB 86.5-95.5V at IT 1mA;IR 5uA max;IIP 12A;TC .106%/°C
83	1.5SE120A	6	Si	A69g	VR 102V;VB 114-126V at IT 1mA;IR 5uA max;IPP 9.1A;TC .107%/°C
84	1.5SE150A	6	Si	A69g	VR 128V;VB 143-158V at IT 1mA;IR 5uA max;IPP 7.2A;TC .108%/°C
85	1.5SE200	6	Si	A69g	VR 162V;VB 180-220V at IT 1mA;IR 5uA max;IPP 5.2A;TC .108%/°C
86	1.5SE220	6	Si	A69g	VR 175V;VB 198-242V at IT 1.0mA;IR 5.0mAmax;IPP4.3A;TC .110%/°C
87	1.5SE220A	6	Si	A69g	VR 185V;VB 209-231V at IT 1.0mA;IR 5.0mAmax;IPP 4.6A;TC .110%/°C
88	1.5SE250	6	Si	A69g	VR 202V;VB 225-275V at IT 1.0mA;IR 5.0mAmax;IPP 5.0A;TC .110%/°C
89	1.5SE250A	6	Si	A69g	VR 214V;VB 237-263V at IT 1.0mA;IR 5.0mAmax;IPP 5.0A;TC .110%/°C
90	1.5SE300	6	Si	A69g	VR 243V;VB 270-330V at IT 1.0mA;IR 5.0mAmax;IPP 5.0A;TC .110%/°C
91	1.5SE300A	6	Si	A69g	VR 256V;VB 285-315V at IT 1.0mA;IR 5.0mAmax;IPP 5.0A;TC .110%/°C
92	1.5SE350	6	Si	A69g	VR 284V;VB 315-385V at IT 1.0mA;IR 5.0mAmax;IPP 4.0A;TC .110%/°C
93	1.5SE350A	6	Si	A69g	VR 300V;VB 333-368V at IT 1.0mA;IR 5.0mAmax;IPP 4.0A;TC .110%/°C
94	1.5SE400	6	Si	A69g	VR 324V;VB 360-440V at IT 1.0mA;IR 5.0mAmax;IPP 4.0A;TC .110%/°C
95	1.5SE400A	6	Si	A69g	VR 342V;VB 380-420V at IT 1.0mA;IR 5.0mAmax;IPP 4.0A;TC .110%/°C
96	5KP5.0	6	Si	A50h	VR 5.0V;BV 6.40VΔ at 50mA;Clamp Volt 9.6VΔ;Ipk 520AΔ
97	5KP5.0A	6	Si	A50h	VR 5.0V;BV 6.40VΔ at 50mA;Clamp Volt 9.2VΔ;Ipk 543AΔ;IR 2.0mAmax
98	5KP6.0	6	Si	A50h	VR 6.0V;BV 6.67VΔ at 50mA;Clamp Volt 11.4VΔ;Ipk 439AΔ
99	5KP6.0A	6	Si	A50h	VR 6.0V;BV 6.67VΔ at 50mA;Clamp Volt 10.3VΔ;Ipk 485AΔ;IR 5.0mAmax
100	5KP6.5	6	Si	A50h	VR 6.5V;BV 7.22VΔ at 50mA;Clamp Volt 12.3VΔ;Ipk 407AΔ
101	5KP6.5A	6	Si	A50h	VR 6.5V;BV 7.22VΔ at 50mA;Clamp Volt 11.2VΔ;Ipk 447AΔ;IR 2.0mAmax
102	5KP7.0	6	Si	A50h	VR 7.0V;BV 7.78VΔ at 50mA;Clamp Volt 13.3VΔ;Ipk 378AΔ
103	5KP7.0A	6	Si	A50h	VR 7.0V;BV 7.78VΔ at 50mA;Clamp Volt 12.0VΔ;Ipk 417AΔ;IR 1.0mAmax
104	5KP7.5	6	Si	A50h	VR 7.5V;BV 8.33VΔ at 5.0mA;Clamp Volt 14.3VΔ;Ipk 350AΔ
105	5KP7.5A	6	Si	A50h	VR 7.5V;BV 8.33VΔ at 5.0mA;Clamp Volt 12.9VΔ;Ipk 388AΔ;IR 250uAmax
106	5KP8.0	6	Si	A50h	VR 8.0V;BV 8.89VΔ at 5.0mA;Clamp Volt 15.0VΔ;Ipk 333AΔ
107	5KP8.0A	6	Si	A50h	VR 8.0V;BV 8.89VΔ at 5.0mA;Clamp Volt 13.6VΔ;Ipk 367AΔ;IR 150uAmax
108	5KP8.5	6	Si	A50h	VR 8.5V;BV 9.44VΔ at 5.0mA;Clamp Volt 15.9VΔ;Ipk 314AΔ
109	5KP8.5A	6	Si	A50h	VR 8.5V;BV 9.44VΔ at 5.0mA;Clamp Volt 14.4VΔ;Ipk 347AΔ;IR 50uAmax
110	5KP9.0	6	Si	A50h	VR 9.0V;BV 10.0VΔ at 5.0mA;Clamp Volt 16.9VΔ;Ipk 295AΔ

7. TRANSIENT SUPPRESSOR DIODES - Bipolar & Unipolar Types (Cont'd)

IN ORDER OF (1) TYPE (2) MAT AND (3) TYPE NO.

LINE No.	3 TYPE NUMBER	1 TYPE	2 MAT.	DWG. NO.	DESCRIPTION
1	5KP9.0A	6	Si	A50h	VR 9.0V;BV 10.0VΔ at 5.0mA;Clamp Volt 15.4VΔ;Ipk 325AΔ;IR 20uAmax
2	5KP10	6	Si	A50h	VR 10V;BV 11.1VΔ at 5.0mA;Clamp Volt 18.8VΔ;Ipk 266AΔ
3	5KP10A	6	Si	A50h	VR 10V;BV 11.0VΔ at 5.0mA;Clamp Volt 17.0VΔ;Ipk 294AΔ;IR 15uAmax
4	5KP11	6	Si	A50h	VR 11V;BV 12.2VΔ at 5.0mA;Clamp Volt 20.1VΔ;Ipk 249AΔ
5	5KP11A	6	Si	A50h	VR 11V;BV 12.2VΔ at 5.0mA;Clamp Volt 18.2VΔ;Ipk 274AΔ;IR 10uAmax
6	5KP12	6	Si	A50h	VR 12V;BV 13.3VΔ at 5.0mA;Clamp Volt 22.0VΔ;Ipk 227AΔ
7	5KP12A	6	Si	A50h	VR 12V;BV 13.3VΔ at 5.0mA;Clamp Volt 19.9VΔ;Ipk 251AΔ;IR 10uAmax
8	5KP13	6	Si	A50h	VR 13V;BV 14.4VΔ at 5.0mA;Clamp Volt 23.8VΔ;Ipk 210AΔ
9	5KP13A	6	Si	A50h	VR 13V;BV 14.4VΔ at 5.0mA;Clamp Volt 21.5VΔ;Ipk 232AΔ;IR 10uAmax
10	5KP14	6	Si	A50h	VR 14V;BV 15.6VΔ at 5.0mA;Clamp Volt 25.8VΔ;Ipk 194AΔ
11	5KP14A	6	Si	A50h	VR 14V;BV 15.6VΔ at 5.0mA;Clamp Volt 23.2VΔ;Ipk 215AΔ;IR 10uAmax
12	5KP15	6	Si	A50h	VR 15V;BV 16.7VΔ at 5.0mA;Clamp Volt 26.9VΔ;Ipk 188AΔ
13	5KP15A	6	Si	A50h	VR 15V;BV 16.7VΔ at 5.0mA;Clamp Volt 24.4VΔ;Ipk 206AΔ;IR 10uAmax
14	5KP16	6	Si	A50h	VR 16V;BV 17.8VΔ at 5.0mA;Clamp Volt 28.8VΔ;Ipk 176AΔ
15	5KP16A	6	Si	A50h	VR 16V;BV 17.8VΔ at 5.0mA;Clamp Volt 26.0VΔ;Ipk 192AΔ;IR 10uAmax
16	5KP17	6	Si	A50h	VR 17V;BV 18.9VΔ at 5.0mA;Clamp Volt 30.5VΔ;Ipk 164AΔ
17	5KP17A	6	Si	A50h	VR 17V;BV 18.9VΔ at 5.0mA;Clamp Volt 27.6VΔ;Ipk 181AΔ;IR 10uAmax
18	5KP18	6	Si	A50h	VR 18V;BV 20.0VΔ at 5.0mA;Clamp Volt 32.2VΔ;Ipk 155AΔ
19	5KP18A	6	Si	A50h	VR 18V;BV 20.0VΔ at 5.0mA;Clamp Volt 29.2VΔ;Ipk 172AΔ;IR 10uAmax
20	5KP20	6	Si	A50h	VR 20V;BV 22.2VΔ at 5.0mA;Clamp Volt 35.8VΔ;Ipk 139AΔ
21	5KP20A	6	Si	A50h	VR 20V;BV 22.2VΔ at 5.0mA;Clamp Volt 32.4VΔ;Ipk 154AΔ;IR 10uAmax
22	5KP22	6	Si	A50h	VR 22V;BV 24.4VΔ at 5.0mA;Clamp Volt 39.4VΔ;Ipk 127AΔ
23	5KP22A	6	Si	A50h	VR 22V;BV 24.4VΔ at 5.0mA;Clamp Volt 35.5VΔ;Ipk 141AΔ;IR 10uAmax
24	5KP24	6	Si	A50h	VR 24V;BV 26.7VΔ at 5.0mA;Clamp Volt 43.0VΔ;Ipk 116AΔ
25	5KP24A	6	Si	A50h	VR 24V;BV 26.7VΔ at 5.0mA;Clamp Volt 38.9VΔ;Ipk 128AΔ;IR 10uAmax
26	5KP26	6	Si	A50h	VR 26V;BV 28.9VΔ at 5.0mA;Clamp Volt 46.6VΔ;Ipk 107AΔ
27	5KP26A	6	Si	A50h	VR 26V;BV 28.9VΔ at 5.0mA;Clamp Volt 42.1VΔ;Ipk 119AΔ;IR 10uAmax
28	5KP28	6	Si	A50h	VR 28V;BV 31.1VΔ at 5.0mA;Clamp Volt 50.1VΔ;Ipk 99AΔ
29	5KP28A	6	Si	A50h	VR 28V;BV 31.1VΔ at 5.0mA;Clamp Volt 45.4VΔ;Ipk 110AΔ;IR 10uAmax
30	5KP30	6	Si	A50h	VR 30V;BV 33.3VΔ at 5.0mA;Clamp Volt 53.5VΔ;Ipk 93AΔ
31	5KP30A	6	Si	A50h	VR 30V;BV 33.3VΔ at 5.0mA;Clamp Volt 48.4VΔ;Ipk 103AΔ;IR 10uAmax
32	5KP33	6	Si	A50h	VR 33V;BV 36.7VΔ at 5.0mA;Clamp Volt 59.0VΔ;Ipk 85AΔ
33	5KP33A	6	Si	A50h	VR 33V;BV 36.7VΔ at 5.0mA;Clamp Volt 53.3VΔ;Ipk 94AΔ;IR 10uAmax
34	5KP36	6	Si	A50h	VR 36V;BV 40.0VΔ at 5.0mA;Clamp Volt 64.3VΔ;Ipk 78AΔ
35	5KP36A	6	Si	A50h	VR 36V;BV 40.0VΔ at 5.0mA;Clamp Volt 58.1VΔ;Ipk 86AΔ;IR 10uAmax
36	5KP40	6	Si	A50h	VR 40V;BV 44.4VΔ at 5.0mA;Clamp Volt 71.4VΔ;Ipk 70AΔ
37	5KP40A	6	Si	A50h	VR 40V;BV 44.4VΔ at 5.0mA;Clamp Volt 64.5VΔ;Ipk 78AΔ;IR 10uAmax
38	5KP43	6	Si	A50h	VR 43V;BV 47.8VΔ at 5.0mA;Clamp Volt 76.7VΔ;Ipk 65AΔ
39	5KP43A	6	Si	A50h	VR 43V;BV 47.8VΔ at 5.0mA;Clamp Volt 69.4VΔ;Ipk 72AΔ;IR 10uAmax
40	5KP45	6	Si	A50h	VR 45V;BV 50.0VΔ at 5.0mA;Clamp Volt 80.3VΔ;Ipk 62AΔ
41	5KP45A	6	Si	A50h	VR 45V;BV 50.0VΔ at 5.0mA;Clamp Volt 72.7VΔ;Ipk 69AΔ;IR 10uAmax
42	5KP48	6	Si	A50h	VR 48V;BV 53.3VΔ at 5.0mA;Clamp Volt 85.5VΔ;Ipk 58AΔ
43	5KP48A	6	Si	A50h	VR 48V;BV 53.3VΔ at 5.0mA;Clamp Volt 77.4VΔ;Ipk 65AΔ;IR 10uAmax
44	5KP51	6	Si	A50h	VR 51V;BV 56.7VΔ at 5.0mA;Clamp Volt 91.1VΔ;Ipk 55AΔ
45	5KP51A	6	Si	A50h	VR 51V;BV 56.7VΔ at 5.0mA;Clamp Volt 82.4VΔ;Ipk 61AΔ;IR 10uAmax
46	5KP54	6	Si	A50h	VR 54V;BV 60.0VΔ at 5.0mA;Clamp Volt 96.3VΔ;Ipk 52AΔ
47	5KP54A	6	Si	A50h	VR 54V;BV 60.0VΔ at 5.0mA;Clamp Volt 87.1VΔ;Ipk 57AΔ;IR 10uAmax
48	5KP58	6	Si	A50h	VR 58V;BV 64.4VΔ at 5.0mA;Clamp Volt 103VΔ;Ipk 49AΔ
49	5KP58A	6	Si	A50h	VR 58V;BV 64.4VΔ at 5.0mA;Clamp Volt 93.6VΔ;Ipk 53AΔ;IR 10uAmax
50	5KP60	6	Si	A50h	VR 60V;BV 66.7VΔ at 5.0mA;Clamp Volt 107VΔ;Ipk 47AΔ
51	5KP60A	6	Si	A50h	VR 60V;BV 66.7VΔ at 5.0mA;Clamp Volt 96.8VΔ;Ipk 52AΔ;IR 10uAmax
52	5KP64	6	Si	A50h	VR 64V;BV 71.1VΔ at 5.0mA;Clamp Volt 114VΔ;Ipk 44AΔ
53	5KP64A	6	Si	A50h	VR 64V;BV 71.1VΔ at 5.0mA;Clamp Volt 103VΔ;Ipk 49AΔ;IR 10uAmax
54	5KP70	6	Si	A50h	VR 70V;BV 77.8VΔ at 5.0mA;Clamp Volt 125VΔ;Ipk 40AΔ
55	5KP70A	6	Si	A50h	VR 70V;BV 77.8VΔ at 5.0mA;Clamp Volt 113VΔ;Ipk 44AΔ;IR 10uAmax
56	5KP75	6	Si	A50h	VR 75V;BV 83.3VΔ at 5.0mA;Clamp Volt 134VΔ;Ipk 37AΔ
57	5KP75A	6	Si	A50h	VR 75V;BV 83.3VΔ at 5.0mA;Clamp Volt 121VΔ;Ipk 41AΔ;IR 10uAmax
58	5KP78	6	Si	A50h	VR 78V;BV 86.7VΔ at 5.0mA;Clamp Volt 139VΔ;Ipk 36AΔ
59	5KP78A	6	Si	A50h	VR 78V;BV 86.7VΔ at 5.0mA;Clamp Volt 126VΔ;Ipk 40AΔ;IR 10uAmax
60	5KP85	6	Si	A50h	VR 85V;BV 94.4VΔ at 5.0mA;Clamp Volt 151VΔ;Ipk 33AΔ
61	5KP85A	6	Si	A50h	VR 85V;BV 94.4VΔ at 5.0mA;Clamp Volt 137VΔ;Ipk 36AΔ;IR 10uAmax
62	5KP90	6	Si	A50h	VR 90V;BV 100VΔ at 5.0mA;Clamp Volt 160VΔ;Ipk 31AΔ
63	5KP90A	6	Si	A50h	VR 90V;BV 100VΔ at 5.0mA;Clamp Volt 146VΔ;Ipk 34AΔ;IR 10uAmax
64	5KP100	6	Si	A50h	VR 100V;BV 111VΔ at 5.0mA;Clamp Volt 179VΔ;Ipk 28AΔ
65	5KP100A	6	Si	A50h	VR 100V;BV 111VΔ at 5.0mA;Clamp Volt 162VΔ;Ipk 31AΔ;IR 10uAmax
66	5KP110	6	Si	A50h	VR 110V;BV 122VΔ at 5.0mA;Clamp Volt 196VΔ;Ipk 26AΔ
67	5KP110A	6	Si	A50h	VR 110V;BV 122VΔ at 5.0mA;Clamp Volt 177VΔ;Ipk 28AΔ;IR 10uAmax
68	15KP17	6	Si	M212n	VR 17V;BV 18.9VΔ at 50mA;Clamp Volt 32.3VΔ;Ipk 464AΔ
69	15KP17A	6	Si	M212n	VR 17V;BV 18.9VΔ at 50mA;Clamp Volt 29.3VΔ;IPk 512AΔ;IR 5.0mAmax
70	15KP18	6	Si	M212n	VR 18V;BV 20.0VΔ at 50mA;Clamp Volt 34.2VΔ;Ipk 439AΔ
71	15KP18A	6	Si	M212n	VR 18V;BV 20.0VΔ at 50mA;Clamp Volt 30.9VΔ;Ipk 485AΔ;IR 5.0mAmax
72	15KP20	6	Si	M212n	VR 20V;BV 22.2VΔ at 20mA;Clamp Volt 37.9VΔ;Ipk 396AΔ
73	15KP20A	6	Si	M212n	VR 20V;BV 22.2VΔ at 20mA;Clamp Volt 34.3VΔ;Ipk 437AΔ;IR 1.5mAmax
74	15KP22	6	Si	M212n	VR 22V;BV 24.4VΔ at 10mA;Clamp Volt 41.1VΔ;Ipk 365AΔ
75	15KP22A	6	Si	M212n	VR 22V;BV 24.4VΔ at 10mA;Clamp Volt 37.1VΔ;Ipk 404AΔ;IR 500uAmax
76	15KP24	6	Si	M212n	VR 24V;BV 26.7VΔ at 5.0mA;Clamp Volt 45.0VΔ;Ipk 333AΔ
77	15KP24A	6	Si	M212n	VR 24V;BV 26.7VΔ at 5.0mA;Clamp Volt 40.7VΔ;Ipk 369AΔ;IR 150uAmax
78	15KP26	6	Si	M212n	VR 26V;BV 28.9VΔ at 5.0mA;Clamp Volt 48.7VΔ;Ipk 308AΔ
79	15KP26A	6	Si	M212n	VR 26V;BV 28.9VΔ at 5.0mA;Clamp Volt 44.0VΔ;Ipk 341AΔ;IR 50uAmax
80	15KP28	6	Si	M212n	VR 28V;BV 31.1VΔ at 5.0mA;Clamp Volt 52.4VΔ;Ipk 286AΔ
81	15KP28A	6	Si	M212n	VR 28V;BV 31.1VΔ at 5.0mA;Clamp Volt 47.5VΔ;Ipk 316AΔ;IR 25uAmax
82	15KP30	6	Si	M212n	VR 30V;BV 33.3VΔ at 5.0mA;Clamp Volt 56.2VΔ;Ipk 267AΔ
83	15KP30A	6	Si	M212n	VR 30V;BV 33.3VΔ at 5.0mA;Clamp Volt 50.7VΔ;Ipk 296AΔ;IR 15uAmax
84	15KP33	6	Si	M212n	VR 33V;BV 36.7VΔ at 5.0mA;Clamp Volt 60.6VΔ;Ipk 248AΔ
85	15KP33A	6	Si	M212n	VR 33V;BV 36.7VΔ at 5.0mA;Clamp Volt 54.8VΔ;IPK 274AΔ;IR 10uAmax
86	15KP36	6	Si	M212n	VR 36V;BV 40.0VΔ at 5.0mA;Clamp Volt 66.0VΔ;Ipk 227AΔ
87	15KP36A	6	Si	M212n	VR 36V;BV 40.0VΔ at 5.0mA;Clamp Volt 59.7VΔ;Ipk 251AΔ;IR 10uAmax
88	15KP40	6	Si	M212n	VR 40V;BV 44.4VΔ at 5.0mA;Clamp Volt 72.8VΔ;Ipk 206AΔ
89	15KP40A	6	Si	M212n	VR 40V;BV 44.4VΔ at 5.0mA;Clamp Volt 65.8VΔ;Ipk 228AΔ;IR 10uAmax
90	15KP43	6	Si	M212n	VR 43V;BV 47.8VΔ at 5.0mA;Clamp Volt 77.1VΔ;Ipk 195AΔ
91	15KP43A	6	Si	M212n	VR 43V;BV 47.8VΔ at 5.0mA;Clamp Volt 69.7VΔ;Ipk 215AΔ;IR 10uAmax
92	15KP45	6	Si	M212n	VR 45V;BV 50.0VΔ at 5.0mA;Clamp Volt 80.7VΔ;Ipk 186AΔ
93	15KP45A	6	Si	M212n	VR 45V;BV 50.0VΔ at 5.0mA;Clamp Volt 73.0VΔ;Ipk 205AΔ;IR 10uAmax
94	15KP48	6	Si	M212n	VR 48V;BV 53.3VΔ at 5.0mA;Clamp Volt 85.9VΔ;Ipk 175AΔ
95	15KP48A	6	Si	M212n	VR 48V;BV 53.3VΔ at 5.0mA;Clamp Volt 77.7VΔ;Ipk 193AΔ;IR 10uAmax
96	15KP51	6	Si	M212n	VR 51V;BV 56.7VΔ at 5.0mA;Clamp Volt 91.5VΔ;Ipk 164AΔ
97	15KP51A	6	Si	M212n	VR 51V;BV 56.7VΔ at 5.0mA;Clamp Volt 82.8VΔ;Ipk 181AΔ;IR 10uAmax
98	15KP54	6	Si	M212n	VR 54V;BV 60.0VΔ at 5.0mA;Clamp Volt 96.8VΔ;Ipk 155AΔ
99	15KP54A	6	Si	M212n	VR 54V;BV 60.0VΔ at 5.0mA;Clamp Volt 87.5VΔ;Ipk 171AΔ;IR 10uAmax
100	15KP58	6	Si	M212n	VR 58V;BV 64.4VΔ at 5.0mA;Clamp Volt 104VΔ;Ipk 144AΔ
101	15KP58A	6	Si	M212n	VR 58V;BV 64.4VΔ at 5.0mA;Clamp Volt 94.0VΔ;Ipk 160AΔ;IR 10uAmax
102	15KP60	6	Si	M212n	VR 60V;BV 66.7VΔ at 5.0mA;Clamp Volt 107VΔ;Ipk 140AΔ
103	15KP60A	6	Si	M212n	VR 60V;BV 66.7VΔ at 5.0mA;Clamp Volt 97.3VΔ;Ipk 154AΔ;IR 10uAmax
104	15KP64	6	Si	M212n	VR 64V;BV 71.1VΔ at 5.0mA;Clamp Volt 115VΔ;Ipk 130AΔ
105	15KP64A	6	Si	M212n	VR 64V;BV 71.1VΔ at 5.0mA;Clamp Volt 104VΔ;Ipk 144AΔ;IR 10uAmax
106	15KP70	6	Si	M212n	VR 70V;BV 77.8VΔ at 5.0mA;Clamp Volt 126VΔ;Ipk 119AΔ
107	15KP70A	6	Si	M212n	VR 70V;BV 77.8VΔ at 5.0mA;Clamp Volt 114VΔ;Ipk 132AΔ;IR 10uAmax
108	15KP75	6	Si	M212n	VR 75V;BV 83.3VΔ at 5.0mA;Clamp Volt 135VΔ;Ipk 111AΔ
109	15KP75A	6	Si	M212n	VR 75V;BV 83.3VΔ at 5.0mA;Clamp Volt 122VΔ;Ipk 123AΔ;IR 10uAmax
110	15KP78	6	Si	M212n	VR 78V;BV 86.7VΔ at 5.0mA;Clamp Volt 140VΔ;Ipk 107AΔ

SYMBOLS AND CODES EXPLAINED IN INTERPRETER

IN ORDER OF (1) TYPE (2) MAT AND (3) TYPE NO.

LINE No.	3 TYPE NUMBER	1 TYPE	2 MAT.	DWG. NO.	DESCRIPTION
1	15KP78A	6	Si	M212n	VR 78V;BV 86.7VΔ at 5.0mA;Clamp Volt 126VΔ;Ipk 119AΔ;IR 10uAmax
2	15KP85	6	Si	M212n	VR 85V;BV 94.4VΔ at 5.0mA;Clamp Volt 152VΔ;Ipk 99AΔ
3	15KP85A	6	Si	M212n	VR 85V;BV 94.4VΔ at 5.0mA;Clamp Volt 137VΔ;Ipk 109AΔ;IR 10uAmax
4	15KP90	6	Si	M212n	VR 90V;BV 100VΔ at 5.0mA;Clamp Volt 160VΔ;Ipk 94AΔ
5	15KP90A	6	Si	M212n	VR 90V;BV 100VΔ at 5.0mA;Clamp Volt 146VΔ;Ipk 103AΔ;IR 10uAmax
6	15KP100	6	Si	M212n	VR 100V;BV 111VΔ at 5.0mA;Clamp Volt 179VΔ;Ipk 84AΔ
7	15KP100A	6	Si	M212n	VR 100V;BV 111VΔ at 5.0mA;Clamp Volt 162VΔ;Ipk 93AΔ;IR 10uAmax
8	15KP110	6	Si	M212n	VR 110V;BV 122VΔ at 5.0mA;Clamp Volt 196VΔ;Ipk 77AΔ
9	15KP110A	6	Si	M212n	VR 110V;BV 122VΔ at 5.0mA;Clamp Volt 178VΔ;Ipk 84AΔ;IR 10UuAmax
10	15KP120	6	Si	M212n	VR 120V;BV 133VΔ at 5.0mA;Clamp Volt 214VΔ;Ipk 70AΔ
11	15KP120A	6	Si	M212n	VR 120V;BV 133VΔ at 5.0mA;Clamp Volt 193VΔ;Ipk 78AΔ;IR 10uAmax
12	15KP130	6	Si	M212n	VR 130V;BV 144VΔ at 5.0mA;Clamp Volt 231VΔ;Ipk 65AΔ
13	15KP130A	6	Si	M212n	VR 130V;BV 144VΔ at 5.0mA;Clamp Volt 209VΔ;Ipk 72AΔ;IR 10uAmax
14	15KP150	6	Si	M212n	VR 150V;BV 167VΔ at 5.0mA;Clamp Volt 268VΔ;Ipk 56AΔ
15	15KP150A	6	Si	M212n	VR 150V;BV 167VΔ at 5.0mA;Clamp Volt 243VΔ;Ipk 62AΔ;IR 10uAmax
16	15KP160	6	Si	M212n	VR 160V;BV 178VΔ at 5.0mA;Clamp Volt 287VΔ;Ipk 52AΔ
17	15KP160A	6	Si	M212n	VR 160V;V 178VΔ at 5.0mA;Clamp Volt 259VΔ;Ipk 58AΔ;IR 10uAmax
18	15KP170	6	Si	M212n	VR 170V;BV 189VΔ at 5.0mA;Clamp Volt 304VΔ;Ipk 49AΔ
19	15KP170A	6	Si	M212n	VR 170V;BV 189VΔ at 5.0mA;Clamp Volt 275VΔ;Ipk 55AΔ;IR 10uAmax
20	15KP180	6	Si	M212n	VR 180V;BV 200VΔ at 5.0mA;Clamp Volt 321VΔ;Ipk 47AΔ
21	15KP180A	6	Si	M212n	VR 180V;BV 200VΔ at 5.0mA;Clamp Volt 291VΔ;Ipk 52AΔ;IR 10uAmax
22	15KP200	6	Si	M212n	VR 200V;BV 222VΔ at 5.0mA;Clamp Volt 356VΔ;Ipk 42AΔ
23	15KP200A	6	Si	M212n	VR 200V;BV 222VΔ at 5.0mA;Clamp Volt 322VΔ;Ipk 47AΔ;IR 10uAmax
24	15KP220	6	Si	M212n	VR 220V;BV 245VΔ at 5.0mA;Clamp Volt 393VΔ;Ipk 38AΔ
25	15KP220A	6	Si	M212n	VR 220V;BV 245VΔ at 5.0mA;Clamp Volt 356VΔ;Ipk 42AΔ;IR 10uAmax
26	15KP240	6	Si	M212n	VR 240V;BV 267VΔ at 5.0mA;Clamp Volt 428VΔ;Ipk 35AΔ
27	15KP240A	6	Si	M212n	VR 240V;BV 267VΔ at 5.0mA;Clamp Volt 388VΔ;Ipk 39AΔ;IR 10uAmax
28	15KP260	6	Si	M212n	VR 260V;BV 289VΔ at 5.0mA;Clamp Volt 464VΔ;Ipk 32AΔ
29	15KP260A	6	Si	M212n	VR 260V;BV 289VΔ at 5.0mA;Clamp Volt 419VΔ;Ipk 36AΔ;IR 10uAmax
30	15KP280	6	Si	M212n	VR 280V;BV 311VΔ at 5.0mA;Clamp Volt 500VΔ;Ipk 30AΔ
31	15KP280A	6	Si	M212n	VR 280V;BV 311VΔ at 5.0mA;Clamp Volt 452VΔ;Ipk 33AΔ;IR 10uAmax
32	60KS200C	6	Si	M964▼	VR 180V;BV 200V min at 1.0mA;Clamp Volt 335V;IPP 180A;PD 10W
33	704-15K36	6	Si	C237b	VR 31.5V;BV 36Vmin at 10mA;Clamp Volt 51V;IR 100uAmax;Vf 3.0V at 100A
34	704-15K36T	6	Si	C237a	VR 31.5V;BV 36Vmin at 10mA;Clamp Volt 51V;IR 500uAmax;Vf 15V at 100A
35	704-34	6	Si	DO13	Vrso 29V;Vclamp 51V;Iso(leakage)5.0uA;Pd(peak)1.5kW;If surge 100A at 8.0msec.
36	704-34A	6	Si	DO13	Vrso 30.5V;Vclamp 47.5V;IR max 5uA;Pd(peak)1.5kW;IPP 32A
37	704-34B	6	Si	DO13	Vrso 29V;Vclamp 44V;Iso(leakage)5.0uA;Pd(peak)1.5kW;If surge 100A at 8.0msec.
38	704-45A	6	Si	DO13	Vrso 49V;Vclamp 63.5V;IR max 5uA;Pd(peak) 1.5kW;IPP 24A
39	704-56A	6	Si	DO13	Vrso 49.0V;Vclamp 78.5V;IR max 5uA;Pd(peak) 1.5kW;IPP 19A
40	704-190A	6	Si	DO13	Vrso 175V;Vclamp 265V;IR max 5uA;Pd(peak) 1.5kW;IPP 5.7A
41	5555E	6	Si	A298ar	VR30.5V;VBR33VNOM;It1.0mA;Vc47.5VatIp32A;IR5.0A
42	5556E	6	Si	A298ar	VR40.3V;VBR43.7VNOM;It1.0mA;Vc63.5VatIp24A;IR5.0A
43	5557E	6	Si	A298ar	VR49V;VBR54VNOM;It1.0mA;Vc78.5VatIp19A;IR5.0A
44	5558E	6	Si	A298ar	VR175V;VBR191VNOM;It1.0mA;Vc265VatIp5.7A;IR5.0A
45	BOD1-04	6	Si	M841	Breakover Diode; VBR400V; IF 300mA;dv/dt1.0k V/uS min;Hold Volt 2.0V; Hold I 5.0mA
46	BOD1-05	6	Si	M841	Breakover Diode;VBR500V;IF 300 mA; dv/dt 1.0k V/uS min;Hold Volt 2.0V; Hold I 5.0mA
47	BOD1-06	6	Si	M841	Breakover Diode;VBR600V;IF 300 mA; dv/dt1.0k V/uS min;Hold Volt 2.0V;Hold I 5.0mA
48	BOD1-07	6	Si	M841	Breakover Diode; VBR700V;IF 300mA; dv/dt 1.0k V/uS min; Hold Volt 2.0V; Hold I 5.0mA
49	BOD1-08	6	Si	M841	Breakover Diode; VBR800V;IF 300mA; dv/dt 1.0k V/uS min; Hold Volt 2.0V; Hold I 5.0mA
50	BOD1-09	6	Si	M841	Breakover Diode; VBR900V; IF 300mA; dv/dt 1.0k V/uS min; Hold Volt 2.0V; Hold I 5.0mA
51	BOD1-10	6	Si	M841	Breakover Diode; VBR1.0k;IF 300mA; dv/dt 1.0k V/uS min; Hold Volt 2.0V; Hold I 5.0mA
52	BOD1-11L	6	Si	M1090	Breakover Diode; VBR1.1kV; IF 300mA; dv/dt 1.0kV/uS min; Min Hold Volt 4.0V; Hold I 10mA
53	BOD1-11LD	6	Si		Breakover Diode;VBR 1.1kV; IF300mA;dv/dt 10kV/uS min;I hold 10mA
54	BOD1-11R	6	Si	M841	Breakover Diode VBR1.1kV; IF 300mA; dv/dt 1.0k VuSmin;Min Hold Volt 4.0V; Hold I 10mA
55	BOD1-11RD	6	Si		Breakover Diode:VBR 1.1kV;IF 300mA;dv/dt 1.0kV/us min;min Hold 4.0V;I Hold 10mA
56	BOD1-12L	6	Si		Breakover Diode:VBR 1.2kV;IF 300mA;dv/dt 1.0kV/us min;min Hold 4.0V;I Hold 10mA
57	BOD1-12LD	6	Si		Breakover Diode:VBR 1.2kV;IF 300mA;dv/dt 1.0kV/us min;min Hold 4.0V;I Hold 10mA
58	BOD1-12R	6	Si	M1090a	Breakover Diode; VBR1.2kV;IF 300mA; dv/dt 1.0k V/uS min; Min Hold Volt 4.0V; Hold I10 m
59	BOD1-12RD	6	Si		Breakover Diode:VBR 1.2kV;IF 300mA;dv/dt 1.0kV/us min;min Hold 4.0V;IHold 10mA
60	BOD1-13L	6	Si		Breakover Diode:VBR 1.3kV;IF 300mA;dv/dt 1.0kV/us min;min Hold 4.0V;IHold 10mA
61	BOD1-13LD	6	Si		Breakover Diode:VBR 1.3kV;IF 300mA;dv/dt 1.0kV/us min;min Hold 4.0V;IHold 10mA
62	BOD1-13R	6	Si	M1090a	Breakover Diode; VBR1.3kV;IF 300mA; dv/dt 1.0k V/uSmin; Min Hold Volt 4.0V;Hold I 10 m
63	BOD1-13RD	6	Si		Breakover Diode:VBR 1.3kV;IF 300mA;dv/dt 1.0kV/us min;min Hold 4.0V;IHold 10mA
64	BOD1-14L	6	Si		Breakover Diode:VBR 1.4kV;IF 300mA;dv/dt 1.0kV/us min;min Hold 4.0V;IHold 10mA
65	BOD1-14LD	6	Si		Breakover Diode:VBR 1.4kV;IF 300mA;dv/dt 1.0kV/us min;min Hold 4.0V;IHold 10mA
66	BOD1-14RD	6	Si		Breakover Diode:VBR 1.4kV;IF 300MA;dv/dt 1.0kV/us min;min Hold 4.0V;IHold 10mA
67	BOD1-15L	6	Si		Breakover Diode:VBR 1.5kV;IF 300mA;dv/dt 1.0kV/us min;min Hold 4.0V;IHold 10mA
68	BOD1-15LD	6	Si		Breakover Diode:VBR 1.5kV;IF 300mA;dv/dt 1.0kV/us min;min Hold 4.0V;IHold 10mA
69	BOD1-15R	6	Si	M1090a	Breakover Diode; VBR1.5kV; IF 300mA; dv/dt 1.0k V/uS min; Min Hold Volt 4.0V; Hold I 10 m
70	BOD1-15RD	6	Si		Breakover Diode:VBR 1.5kV;IF 300mA;dv/dt 1.0kV/us min;min Hold 4.0V;IHold 10mA
71	BOD1-16L	6	Si		Breakover Diode:VBR 1.6kV;IF 300mA;dv/dt 1.5kV/us min;min Hold 4.0V;IHold 10mA
72	BOD1-16LD	6	Si		Breakover Diode:VBR 1.6kV;IF 300mA;dv/dt 1.5kV/us min;min Hold 4.0V;IHold 10mA
73	BOD1-16R	6	Si	M1090a	Breakover Diode: VBR 1.4kV; IF 300mA; dv/dt 1.0kV/us min Hold 4.0V; IHold 10mA
74	BOD1-16RD	6	Si		Breakover Diode:VBR 1.6kV;IF 300mA;dv/dt 1.5kV/us min;min Hold 4.0V;IHold 10mA
75	BOD1-17L	6	Si		Breakover Diode:VBR 1.7kV;IF 300mA;dv/dt 1.5kV/us min;min Hold 4.0V;IHold 10mA
76	BOD1-17LD	6	Si		Breakover Diode:VBR 1.7kV;IF 300mA;dv/dt 1.5kV/us min;min Hold 4.0V;IHold 10mA
77	BOD1-17R	6	Si	M1090a	Breakover Diode;VBR1.7kV;IF 300mA;dv/dt1.5kV/us min;Min Hold Volt 4.0V;Hold I 10mA
78	BOD1-17RD	6	Si		Breakover Diode:VBR 1.7kV;IF 300mA;dV/dt 1.5kV/us min;min Hold 4.0V;IHold 10mA
79	BOD1-18L	6	Si		Breakover Diode:VBR 1.8kV;IF 300mA;dv/dt 1.5kV/us min;min Hold 4.0V;IHold 10mA
80	BOD1-18LD	6	Si		Breakover Diode:VBR 1.8kV;IF 300mA;dv/dt 1.5kV/us min;min Hold 4.0V;IHold 10mA
81	BOD1-18R	6	Si	M1090a	Breakover Diode;VBR1.8kV;IF 300mA;dv/dt1.5kV/us min;Min Hold Volt 4.0V;Hold I 10mA
82	BOD1-18RD	6	Si		Breakover Diode:VBR 1.8kV;IF 300mA;dv/dt 1.5kV/us min;min Hold 4.0V;IHold 10mA
83	BOD1-19L	6	Si		Breakover Diode:VBR 1.9kV;IF 300mA;dv/dt 1.5kV/us min;min Hold 4.0V;IHold 10mA
84	BOD1-19LD	6	Si		Breakover Diode:VBR 1.9kV;IF 300mA;dv/dt 1.5kV/us min;min Hold 4.0V;IHold 10mA
85	BOD1-19R	6	Si	M1090a	Breakover Diode; VBR1.9kV; IF 300mA; dv/dt 1.5kV/uS min;Min Hold Volt 4.0V; Hold I 10mA
86	BOD1-19RD	6	Si		Breakover Diode:VBR 1.9kV;IF 300mA;dv/dt 1.5kV/us min;min Hold 4.0V;IHold 10mA
87	BOD1-20L	6	Si		Breakover Diode:VBR 2.0kV;IF 300mA;dV/dt 1.5kV/us min;min Hold 4.0V;IHold 10mA
88	BOD1-20LD	6	Si		Breakover Diode:VBR 2.0kV;IF 300mA;dv/dt 1.5kV/us min;min Hold 4.0V;IHold 10mA
89	BOD1-20R	6	Si	M1090a	Breakover Diode; VBR2.0kV; IF 300mA;dv/dt 1.5kV/uS min; Min Hold Volt 4.0V; Hold I 10 mA
90	BOD1-20RD	6	Si		Breakover Diode:VBR 2.0kV;IF 300mA;dv/dt 1.5kV/us min;min Hold 4.0V;IHold 10mA
91	BOD1-21L	6	Si		Breakover Diode:VBR 2.1kV;IF 300mA;dv/dt 2.0kV/us min;min Hold 4.0V;I Hold 10mA
92	BOD1-21LD	6	Si		Breakover Diode;VBR 2.1kV;IF 300mA;dv/dt 2kV/uS min;I hold 10mA
93	BOD1-21R	6	Si	M1090a	Breakover Diode;VBR2.1kV;IF 300mA;dv/dt2.0kV/us min;Min Hold Volt 4.0V;Hold I 10mA
94	BOD1-21RD	6	Si		Breakover Diode:VBR 2.1kV;IF 300mA;dV/dt 2.0kV/us min;min Hold 4.0V;IHold 10mA
95	BOD1-22L	6	Si		Breakover Diode:VBR 2.2kV;IF 300mA;dv/dt 2.0kV/us min;min Hold 4,0V;IHold 10mA
96	BOD1-22LD	6	Si		Breakover Diode:VBR 2.2kV;IF 300mA;dv/dt 2.0kV/us min;min Hold 4.0V;IHold 10mA
97	BOD1-22R	6	Si	M1090a	Breakover Diode;VBR2.2kV;IF 300mA;dv/dt2.0kV/us min;Min Hold Volt 4.0V;Hold I 10mA
98	BOD1-22RD	6	Si		Breakover Diode:VBR 2.2kV;IF 300mA;dv/dt 2.0kV/us min;min Hold 4.0V;IHold 10mA
99	BOD1-23L	6	Si		Breakover Diode;VBR 2.3kV;IF 300mA;dv/dt 2.0kV/uS min;min Hold 4.0V;IHold 10mA
100	BOD1-23LD	6	Si		Breakover Diode;VBR 2.3kV;IF 300mA;dv/dt 2.0kV/us min;min Hold 4.0V;I Hold 10mA
101	BOD1-23R	6	Si	M1090a	Breakover Diode;VBR2.3kV;IF 300mA;dv/dt2.0kV/us min;Min Hold Volt 4.0V;Hold I 10mA
102	BOD1-23RD	6	Si		Breakover Diode:VBR 2.3kV;IF 300mA;dv/dt 2.0kV/us min;min Hold 4.0V;I Hold 10Ma
103	BOD1-24L	6	Si		Breakover Diode:VBR 2.4kV;IF 300mA;dv/dt 2.0kV/us min;min Hold 4.0V;I Hold 10mA
104	BOD1-24LD	6	Si		Breakover Diode:VBR 2.4kV/IF 300mA;dv/dt 2.0kV/us min;min Hold 4.0V;I Hold 10mA
105	BOD1-24R	6	Si	M1090a	Breakover Diode; VBR 2.4kV; IF 300mA; dv/dt 2.0kV/uS min;Min Hold Volt 4.0V; Hold I 10 mA
106	BOD1-24RD	6	Si		Breakover Diode:VBR 2.4kV;IF 300mA;dv/dt 2.0kV/us min;min Hold 4.0V;I Hold 10mA
107	BOD1-25L	6	Si		Breakover Diode;VBR 2.5kV;IF 300mA;dv/dt 2.0kV/us min;min Hold 4.0V;I Hold 10mA
108	BOD1-25LD	6	Si		Breakover Diode;VBR 2.5kV;IF 300mA;dv/dt 2.0kV/us min;min Hold 4.0V;I Hold 10mA
109	BOD1-25R	6	Si	M1090a	Breakover Diode:VBR 2.3KV;IF 300mA;dv/dt 2.0KV/us min:min Hold 4.0V;I Hold 10mA
110	BOD1-25RD	6	Si		Breakover Diode:VBR 2.3KV;IF 300mA;dv/dt 2.0KV/us min:min Hold 4.0V; I Hold 10mA

SYMBOLS AND CODES EXPLAINED IN INTERPRETER

7. TRANSIENT SUPPRESSOR DIODES - Bipolar & Unipolar Types (Cont'd)

IN ORDER OF (1) TYPE (2) MAT AND (3) TYPE NO.

LINE No.	3 TYPE NUMBER	1 TYPE	2 MAT.	DWG. NO.	DESCRIPTION
1	BOD1-26L	6	Si		Breakover Diode:VBR 2.6kV;IF 300mA;dv/dt 2.5kV/uS min;min Hold 4.0V;IHold 10mA
2	BOD1-26LD	6	Si		Breakover Diode:VBR 2.6kV;IF 300mA;dv/dt 2.5kV/uS min;min Hold 4.0V;IHold 10mA
3	BOD1-26R	6	Si	M1090a	Breakover Diode; VBR2.6kV; IF 300mA; dv/dt 2.5kV/uS min;Min Hold Volt 4.0V; Hold I 10mA
4	BOD1-26RD	6	Si		Breakover Diode:VBR 2.6kV;IF 300mA;dv/dt 2.5kV/uS min;min Hold 4.0V;IHold 10mA
5	BOD1-28L	6	Si		Breakover Diode:VBR 2.8kV;IF 300mA;dv/dt 2.5kV/uS min;min Hold 4.0V;IHold 10mA
6	BOD1-28LD	6	Si		Breakover Diode:VBR 2.8kV;IF 300mA;dv/dt 2.5kV/uS min;min Hold 4.0V;IHold 10mA
7	BOD1-28R	6	Si	M1090a	Breakover Diode;VBR2.8kV; IF 300mA;dv/dt 2.5kV/uS min;Min Hold Volt 4.0V; Hold I 10mA
8	BOD1-28RD	6	Si		Breakover Diode:VBR 2.8kV;IF 300mA;dv/dt 2.5kV/uS min;min Hold 4.0V;IHold 10mA
9	BOD1-30L	6	Si		Breakover Diode; VBR 3.0kV; IF 300mA; dv/dt 2.5kV/uS min; min Hold 4.0V; IHold 10mA
10	BOD1-30LD	6	Si		Breakover Diode:VBR 3.0kV;IF 300mA;dv/dt 2.5kV/uS min;min Hold 4.0V;IHold 10mA
11	BOD1-30R	6	Si	M1090a	Breakover Diode;VBR3.0kV;IF 300mA;dv/dt2.5kV/us min;Min Hold Volt 4.0V;Hold I 10mA
12	BOD1-30RD	6	Si		Breakover Diode:VBR 3.0kV;IF 300mA;dv/dt 2.5kV/uS min;min Hold 4.0V;IHold 10mA
13	BOD1-32R	6	Si	M1090a	Breakover Diode:VBR 3.2kV;IF 300mA;dv/dt 3kV/us min;min Hold 4.0V;IHold 10mA
14	BOD1-34R	6	Si	M1090a	Breakover Diode:VBR 3.4kV;IF 300mA;dv/dt 3kV/us min;min Hold 4.0V;IHold 10mA
15	BOD1-36R	6	Si	M1090a	Breakover Diode; VBR3.6kV; IF 300mA; dv/dt 3.5kV/uSmin;Min Hold Volt 4.0V; Hold I 10mA
16	BOD1-38R	6	Si	M1090a	Breakover Diode;VBR3.8kV; IF 300mA; dv/dt 3.5kV/uSmin; Min Hold Volt 4.0V; Hold I 10mA
17	BOD1-40R	6	Si	M1090a	Breakover Diode:VBR 4.0kV;IF 300mA;dv/dt 3.5kV/us min;min Hold 4.0V;IHold 10mA
18	BODI-11LD	6	Si		Breakover Diode; VBR 1.1kV; IF 300mA; dv/dt 10kV/uS Min; I hold 10mA
19	BZT03C7V5	6	Si	A393c	Regulator Diode; VZ 7.5; IZ 100mA; VR 5.6; IR 1.5mA at VR 6.2V
20	BZT03C8V2	6	Si	A393c	Regulator Diode; VZ 8.2; IZ 100mA; VR 6.2; IR 1.2 mA at VR 6.8V
21	BZW03C8V2	6	Si	A393d	VR Clamp 12.3; IR 2.4mA at VR 6.8V; IRSM 40.6A
22	BZW03C9V1	6	Si	A393d	VR Clamp 13.3; IR 100uA at VR 7.5V; IRSM 37.6A
23	BZW03C10	6	Si	A393d	VR Clamp 14.8; IR 40uA at VR 8.2V; IRSM 34.0A
24	BZW03C11	6	Si	A393d	VR Clamp 15.7; IR 30uA at VR 9.1V; IRSM 31.8A
25	BZW03C12	6	Si	A393d	VR Clamp 17.0; IR 20uA at VR 10V; IRSM 29.4A
26	BZW03C13	6	Si	A393d	VR Clamp 18.9; IR 10uA at VR 11V; IRSM 26.4A
27	BZW03C15	6	Si	A393d	VR Clamp 20.9; IR 10uA at VR 12V; IRSM 23.9A
28	BZW03C16	6	Si	A393d	VR Clamp 22.9; IR 10uA at VR 13V; IRSM 21.8A
29	BZW03C18	6	Si	A393d	VR Clamp 25.6; IR 10uA at VR 15V; IRSM 19.5A
30	BZW03C20	6	Si	A393d	VR Clamp 28.4; IR 10uA at VR 16V; IRSM 17.6A
31	BZW03C22	6	Si	A393d	VR Clamp 31.0; IR 10uA at VR 18V; IRSM 16.1A
32	BZW03C24	6	Si	A393d	VR Clamp 33.8; IR 10uA at VR 20V; IRSM 14.8A
33	BZW03C27	6	Si	A393d	VR Clamp 38.1; IR 10uA at VR 22V; IRSM 13.1A
34	BZW03C30	6	Si	A393d	VR Clamp 42.2; IR 10uA at VR 24V; IRSM 11.8A
35	BZW03C33	6	Si	A393d	VR Clamp 46.2; IR 10uA at VR 27V; IRSM 10.8A
36	BZW03C36	6	Si	A393d	VR Clamp 50.1; IR 10uA at VR 30V; IRSM 10.0A
37	BZW03C39	6	Si	A393d	VR Clamp 54.1; IR 10uA at VR 33V; IRSM 9.2A
38	BZW03C43	6	Si	A393d	VR Clamp 60.7; IR 10uA at VR 36V; IRSM 8.2A
39	BZW03C47	6	Si	A393d	VR Clamp 65.5; IR 10uA at VR 39V; IRSM 7.6A
40	BZW03C51	6	Si	A393d	VR Clamp 70.8; IR 10uA at VR 43V; IRSM 7.0A
41	BZW03C56	6	Si	A393d	VR Clamp 78.6; IR 10uA at VR 47V; IRSM 6.3A
42	BZW03C62	6	Si	A393d	VR Clamp 86.5; IR 10uA at VR 51V; IRSM 5.8A
43	BZW03C68	6	Si	A393d	VR Clamp 94.4; IR 10uA at VR 56V; IRSM 5.3A
44	BZW03C75	6	Si	A393d	VR Clamp 103.5; IR 10uA at VR 62V; IRSM 4.8A
45	BZW03C82	6	Si	A393d	VR Clamp 114; IR 10uA at VR 68V; IRSM 4.3A
46	BZW03C91	6	Si	A393d	VR Clamp 126; IR 10uA at VR 75V; IRSM 3.9A
47	BZW03C100	6	Si	A393d	VR Clamp 139; IR 10uA at VR 82V; IRSM 3.6A
48	BZW03C110	6	Si	A393d	VR Clamp 152; IR 10uA at VR 91V; IRSM 3.3A
49	BZW03C120	6	Si	A393d	VR Clamp 167; IR 10uA at VR 100V; IRSM 3.0A
50	BZW03C130	6	Si	A393d	VR Clamp 185; IR 10uA at VR 110V; IRSM 2.7A
51	BZW03C150	6	Si	A393d	VR Clamp 204; IR 10uA at VR 120V; IRSM 2.4A
52	BZW03C160	6	Si	A393d	VR Clamp 224; IR 10uA at VR 130V; IRSM 2.2A
53	BZW03C180	6	Si	A393d	VR Clamp 249; IR 10uA at VR 150V; IRSM 2.0A
54	BZW03C200	6	Si	A393d	VR Clamp 276; IR 10uA at VR 160V; IRSM 1.8A
55	BZW03C220	6	Si	A393d	VR Clamp 305; IR 10uA at VR 180V; IRSM 1.6A
56	BZW03C240	6	Si	A393d	VR Clamp 336; IR 10uA at VR 200V; IRSM 1.5A
57	BZW03C270	6	Si	A393d	VR Clamp 380; IR 10uA at VR 220V; IRSM 1.3A
58♦	BZW04-8V5	6	Si	DO15	TRM 10 uA at 8.55VRM; 11.0 V(BR) max at IR 1.0 mA; 14.5 V(CL)at Ipp 27.6A
59	BZW04-24	6	Si	Albg	Voltage Suppressor;V(BR) 33V max;IRM 5uA at VRM 24.3V
60▼	BZW04-145	6	Si	DO15	IRM5.0uA at 145VRM; 187 V(BR) max at 1.0mA; 234 V(CL) at Ipp1.7A
61	BZW06-138	6	Si	A1bg	BV 187V max;Vc Volt/Ipp 244V/6.2A max
62	BZW07-10	6	Si	A344z	PRSM 700W/1.0mS;Clamp Volt 25V at IR(Surge)max 30A;V(BR)R 16V;IR max 5.0u
63	BZW07-10B	6	Si	A344z	PRSM 700W/1.0mS;Clamp Volt 25V at IR(Surge)max 30A;V(BR)R 16V;IR max 5.0u
64	BZW07-27	6	Si	A344z	PRSM 700W/1.0mS;Clamp Volt 53V at IR(Surge)max 1.3A;V(BR)R 36V;IR max 5.0u
65	BZW07-27B	6	Si	A344z	PRSM 700W/1.0mS;Clamp Volt 53V at IR(Surge)max 13A;V(BR)R 36V;IR max 5.0u
66	BZW07-43	6	Si	A344z	PRSM 700W/1.0mS;Clamp Volt 90V at IR(Surge)max 8.0A;V(BR)R 62V;IR max 5.0u
67	BZW07-43B	6	Si	A344z	PRSM 700W/1.0mS;Clamp Volt 90V at IR(Surge)max 8.0A;V(BR)R 62V;IR max 5.0u
68	BZW07-110	6	Si	A344z	PRSM 700W/1.0mS;Clamp Volt 235V at IR(Surge)max 3.0A;V(BR)R 160V;IR max 5.0u
69	BZW07-110B	6	Si	A344z	PRSM 700W/1.0mS;Clamp Volt 235V at IR(Surge)max 3.0A;V(BR)R 160V;IR max 5.0u
70	BZW10-12	6	Si	M1030 †	Use as Polarity Guard;VI 12V;IR 40uA Temp 70°C Amb
71	BZW10-15	6	Si	M1030 †	Use as Polarity Guard;VI 15V;IR 40uA Temp 70°C Amb
72▼	BZW11-7V0	6	Si	DO27	IRM 200uA at 7.2 VRM; 9.02 V(BR) max at IR 1.0 mA; 12.1 V(CL)at Ipp 82.6A
73▼	BZW11-7V8	6	Si	DO27	IRM 50uA at 7.78 VRM; 10.0 V(BR) max at IR 1.0mA; 13.4 V(CL)at Ipp 74.6A
74▼	BZW11-8V5	6	Si	DO27	IRM 10uA at 8.85 VRM; 11.0 V(BR) max at IR 1.0mA; 14.5 V(CL)at Ipp 68.9A
75▼	BZW11-9V4	6	Si	DO27	IRM 5.0uA at 9.4 VRM; 12.1 V(BR) max at IR 1.0mA; 15.6 V(CL)at Ipp 64.1A
76	BZW11-10	6	Si	DO27	PRSM 1.0kW/1.0mS;Clamp Volt 26V at IR(Surge)max 38.5A;V(BR)R 16V;IR max 5.0u
77	BZW11-10B	6	Si	DO27	PRSM 1.0kW/1.0ms;Clamp Volt 26V at IR(Surge)max 38.5A;V(BR)R16V;IR max 5.0u
78▼	BZW11-11	6	Si	DO27	IRM 5.0uA at 11.1 VRM; 14.3 V(BR) max at IR 1.0 mA; 18.2 V(CL) at Ipp 54.9A
79▼	BZW11-13	6	Si	DO27	IRM 5.0uA at 12.8 VRM; 16.5 V(BR) max at IR 1.0 mA; 21.2 V(CL) at Ipp 47.1A
80▼	BZW11-14	6	Si	DO27	IRM 5.0uA at 15.3 VRM; 19.8 V(BR) max at IR 1.0 mA; 25.2 V(CL) at Ipp 39.6A
81▼	BZW11-15	6	Si	DO27	IRM 5.0uA at 15.3 VRM; 19.8 V(BR) max at IR 1.0 mA; 25.2 V(CL) at Ipp 39.6A
82▼	BZW11-17	6	Si	DO27	IRM5.0uA at 17.1 VRM; 22 V(BR) max at IR1.0mA; 27.7 V(CL) at Ipp36.1A
83▼	BZW11-19	6	Si	DO27	IRM5.0uA at 18.8 VRM; 24.2 V(BR) max at IR1.0mA; 30.6 V(CL) at Ipp32.6A
84▼	BZW11-20	6	Si	DO27	IRM5.0uA at 20.5 VRM; 26.4 V(BR) max at IR1.0mA; 33.2 V(CL) at Ipp30.1A
85▼	BZW11-23	6	Si	DO27	IRM5.0uA at 23.1 VRM; 29.7 V(BR) max at IR1.0mA; 37.5 V(CL) at Ipp26.6A
86▼	BZW11-26	6	Si	DO27	IRM5.0uA at 25.6 VRM; 33 V(BR) max at IR1.0mA; 41.5 V(CL) at Ipp24A
87	BZW11-27	6	Si	DO27	PRSM 1.0kW/1.0mS;Clamp Volt 56.5V at IR(Surge)max 17.5A;V(BR)R 36V;IR max 5.0u
88	BZW11-27B	6	Si	DO27	PRSM 1.0kW/1.0mS;Clamp Volt 56.5V at IR(Surge)max 17.5A;V(BR)R 36V;IR max 5.0u
89▼	BZW11-28	6	Si	DO27	IRM5.0uA at 28.2 VRM; 36.3 V(BR) max at IR1.0mA; 45.7 V(CL) at Ipp21.8A
90▼	BZW11-31	6	Si	DO27	IRM5.0uA at 30.8 VRM; 39.6 V(BR) max at IR1.0mA; 49.9 V(CL) at Ipp20A
91▼	BZW11-33	6	Si	DO27	IRM5.0uA at 33.3 VRM; 42.9 V(BR) max at IR1.0mA; 53.9 V(CL) at Ipp18.5A
92▼	BZW11-37	6	Si	DO27	IRM5.0uA at 36.8 VRM; 47.3 V(BR) max at IR1.0mA; 59.3 V(CL) at Ipp16.8A
93▼	BZW11-40	6	Si	DO27	IRM5.0uA at 40.2 VRM; 51.7 V(BR) max at IR1.0mA; 64.8 V(CL) at Ipp15.4A
94	BZW11-43	6	Si	DO27	PRSM 1.0kW/1.0mS;Clamp Volt 97.8V at IR(Surge)max 10A;V(BR)R 62V;IR max 5.0u
95	BZW11-43B	6	Si	DO27	PRSM 1.0kW/1.0mS;Clamp Volt 97.8V at IR(Surge)max 10A;V(BR)R 62V;IR max 5.0u
96▼	BZW11-44	6	Si	DO27	IRM5.0uA at 43.6 VRM; 56.1 V(BR) max at IR1.0mA; 70.1 V(CL) at Ipp14.2A
97▼	BZW11-48	6	Si	DO27	IRM5.0uA at 47.8 VRM; 61.6 V(BR) max at IR1.0mA; 77 V(CL) at Ipp12.9A
98▼	BZW11-53	6	Si	DO27	IRM 5.0 uA at 53 VRM; 68.2V(BR)max at IR 1.0 mA; 85 V(CL)at Ipp 11.7A
99▼	BZW11-58	6	Si	DO27	IRM 5.0 uA at 58.1 VRM; 74.8 V(BR)max at IR 1.0 mA; 92 V(CL)at Ipp 10.8A
100▼	BZW11-64	6	Si	DO27	IRM 5.0 uAat 64.1 VRM; 82.5 V(BR)max at IR 1.0 mA;103 V(CL)at Ipp 9.7A
101▼	BZW11-70	6	Si	DO27	IRM 5.0 uAat 70.1 VRM; 90.2 V(BR)max at IR 1.0 mA;113 V(CL)at Ipp 8.8A
102▼	BZW11-78	6	Si	DO27	IRM 5.0 uAat 77.8 VRM; 100 V(BR)max at IR 1.0 mA;125 V(CL)at Ipp 8.0A
103▼	BZW11-85	6	Si	DO27	IRM 5.0 uAat 85.8 VRM; 110 V(BR)max at IR 1.0 mA;137 V(CL)at Ipp 7.2A
104▼	BZW11-94	6	Si	DO27	IRM 5.0 uAat 94 VRM; 121 V(BR)max at IR 1.0 mA;152 V(CL)at Ipp 6.5A
105▼	BZW11-102	6	Si	DO27	IRM 5.0uA at 102 VRM; 132 V(BR) max at IR 1.0mA; 165 V(CL)at Ipp 6.0A
106	BZW11-110	6	Si	DO27	PRSM 1.0kW/1.0mS;Clamp Volt 260V at IR(Surge)max 3.8A;V(BR)R 160V;IR max 5.0u
107	BZW11-110B	6	Si	DO27	PRSM 1.0kW/1.0mS;Clamp Volt 260V at IR(Surge)max; 3.8A;V(BR)R 160V;IR max 5.0u
108▼	BZW11-128	6	Si	DO27	IRM 5.0 uA at 128 VRM; 165 V(BR) max at IR 1.0 mA; 207 V(CL) at Ipp 4.8A
109▼	BZW11-136	6	Si	DO27	IRM 5.0 uA at 136 VRM; 176 V(BR) max at IR 1.0 mA; 219 V(CL) at Ipp 4.5A
110▼	BZW11-145	6	Si	DO27	IRM 5.0 uAat 145 VRM; 187 V(BR)max at IR 1.0 mA;234 V(CL)at Ipp 4.2A

SYMBOLS AND CODES EXPLAINED IN INTERPRETER

7. TRANSIENT SUPPRESSOR DIODES – Bipolar & Unipolar Types (Cont'd)

IN ORDER OF (1) TYPE (2) MAT AND (3) TYPE NO.

LINE No.	3 TYPE NUMBER	1 TYPE	2 MAT.	DWG. NO.	DESCRIPTION
1▼	BZW11-154	6	Si	DO27	IRM 5.0 uAat 154 VRM; 198 V(BR)max at IR 1.0 mA;246 V(CL)at Ipp 4.0A
2▼	BZW11-171	6	Si	DO27	IRM5.0 uAat 171 VRM;220V(BR)max at IR 1.0 mA; 274 V(CL) at Ipp 3.6A
3	BZW14	6	Si	A313	VR 12V; VClamp 28V; VF 1.3V; IR 40uA; Max Temp 150°C
4	BZW30-12	6	Si	A69ai	IRM 5.0uA at 12.1VRM;16.5 V(BR) max at IR 1.0mA;23.4V(CL) at Ipp 128A
5	BZW30-24	6	Si	A69ai	IRM 5.0uA at 24.3VRM;33V(BR) max at 1.0mA;44.1V(CL) at Ipp 68A
6	BZW30-27	6	Si	A69ai	IRM 5.0uA at 26.8VRM;36.3V(BR) max at 1.0mA;46.9V(CL) at Ipp 64A
7	BZW50-8V2	6	Si	A318	PRSM 5.0kW/1.0mS;Clamp Volt 15.3V at IR(Surge)max 327A;V(BR)R 10.1V;IR max 10u
8	BZW50-10	6	Si	A318	PRSM 5.0kW/1.0mS;Clamp Volt 18.8V at IR(Surge)max 266A;V(BR)R 12.4V;IR max 5.0u
9	BZW50-12	6	Si	A318	PRSM 5.0kW/1.0mS;Clamp Volt 22V at IR(Surge)max 227A;V(BR)R 14.8V;IR max 5.0u
10	BZW50-12B	6	Si	A1aaj	BV 16.3V max;Vc Volt/Ipp 22V/227A max
11	BZW50-15	6	Si	A318	PRSM 5.0kW/1.0mS;Clamp Volt 26.9V at IR(Surge)max 186A;V(BR)R 18.5V;IR max 5.0u
12	BZW50-15B	6	Si	A1aaj	BV 20.4V max;Vc Volt/Ipp 26.9V/186A max
13	BZW50-18	6	Si	A318	PRSM 5.0kW/1.0mS;Clamp Volt 32.2V at IR(Surge)max 155A;V(BR)R 22.2V;IR max 5.0u
14	BZW50-18B	6	Si	A1aaj	BV 24.4V max;Vc Volt/Ipp 32.2V/155A max
15	BZW50-22	6	Si	A318	PRSM5.0kW/1.0ms;Clamp Volt 39.4V at IR(Surge)max 127A;V(BR)R27.1V;IR max 5.0u
16	BZW50-22B	6	Si	A1aaj	BV 29.8V max;Vc Volt/Ipp 39.4V/127A max
17	BZW50-27	6	Si	A318	PRSM 5.0kW/1.0mS;Clamp Volt 48.3V at IR(Surge)max 103A;V(BR)R 33.3V;IR max 5.0u
18	BZW50-27B	6	Si	A1aaj	BV 36.6V max;Vc Volt/Ipp 48.3V/103A max
19	BZW50-33	6	Si	A318	PRSM 5.0kW/1.0mS; Clamp Volt 59V at IR (Surge) max 85A; V(BR)R 40.7V; IR max 5.0u
20	BZW50-33B	6	Si	A1aaj	BV 44.7V max;Vc Volt/Ipp 59V/85A max
21	BZW50-39	6	Si	A318	PRSM 5.0kW/1.0mS; Clamp Volt 69.4V at IR (Surge) max 72A; V(BR)R 48.1V; IR max 5.0u
22	BZW50-39B	6	Si	A1aaj	BV 53V max;Vc Volt/Ipp 69.4V/72A max
23	BZW50-47	6	Si	A318	PRSM 5.0kW/1.0mS; Clamp Volt 83.2V at IR (Surge) max 60.1A; V(BR)R 57.8V; IR max 5.0u
24	BZW50-47B	6	Si	A1aaj	BV 63.6V max;Vc Volt/Ipp 83.2V/60.1A max
25	BZW50-56	6	Si	A318	PRSM 5.0kW/1.0mS; Clamp Volt 99.6V at IR (Surge) max 50A; V(BR)R 69.1V; IR max 5.0u
26	BZW50-56B	6	Si	A1aaj	BV 76V max;Vc Volt/Ipp 99.6V/50A max
27	BZW50-68	6	Si	A318	PRSM 5.0kW/1.0mS; Clamp Volt 121V at IR (Surge) max 41A; V(BR)R 84V; IR max 5.0u
28	BZW50-68B	6	Si	A1aaj	BV 92.4V max;Vc Volt/Ipp 121V/41A max
29	BZW50-82	6	Si	A318	PRSM 5.0kW/1.0mS; Clamp Volt 145V at IR (Surge) max 34A; V(BR)R 101.2V; IR max 5.0u
30	BZW50-82B	6	Si	A1aaj	BV 111V max;Vc Volt/Ipp 145V/34A max
31	BZW50-100	6	Si	A318	PRSM 5.0kW/1.0mS; Clamp Volt 179V at IR (Surge) max 28A; V(BR)R 123.5V; IR max 5.0u
32	BZW50-100B	6	Si	A1aaj	BV 136V max;Vc Volt/Ipp 179V/28A max
33	BZW50-120	6	Si	A318	PRSM 5.0kW/1.0mS; Clamp Volt 215V at IR (Surge) max 23A; V(BR)R 148.1V; IR max 5.0u
34	BZW50-120B	6	Si	A1aaj	BV 163V max;Vc Volt/Ipp 215V/23A max
35	BZW50-150	6	Si	A318	PRSM 5.0kW/1.0mS; Clamp Volt 269V at IR (Surge) max 19A; V(BR)R 185.2V; IR max 5.0u
36	BZW50-150B	6	Si	A1aaj	BV 204V max;Vc Volt/Ipp 269V/19A max
37	BZW50-180	6	Si	A318	PRSM 5.0kW/1.0mS; Clamp Volt 322V at IR (Surge) max 16A; V(BR)R 222V; IR max 5.0u
38	BZW50-180B	6	Si	A1aaj	BV 244V max;Vc Volt/Ipp 322V/16A max
39	BZW70-5V6	6	Si	A283a	VR 5.6V;VBR 6.4V;IR 500uA;VF 1.5V max at IF 1.0A.
40	BZW70-6V2	6	Si	A283a	VR 6.2V;VBR 7.0V;IR 500uA;VF 1.5V max at IF 1.0A.
41	BZW70-6V8	6	Si	A283a	VR 6.8V;VBR 7.7V;IR 500uA;VF 1.5V max at IF 1.0A.
42	BZW70-7V5	6	Si	A283a	VR 7.5V;VBR 8.5V;IR 100uA;VF 1.5V max at IF 1.0A.
43	BZW70-8V2	6	Si	A283a	VR 8.2V;VBR 9.4V;IR 100uA;VF 1.5V max at IF 1.0A.
44	BZW70-9V1	6	Si	A283a	VR 9.1V;VBR 10.4V;IR 100uA;VF 1.5V max at IF 1.0A.
45	BZW70-10	6	Si	A283a	VR 10V;VBR 11.4V;IR 100uA;VF 1.5V max at IF 1.0A.
46	BZW70-11	6	Si	A283a	VR 11V;VBR 12.4V;IR 100uA;VF 1.5V max at IF 1.0A.
47	BZW70-12	6	Si	A283a	VR 12V;VBR 13.8V;IR 100uA;VF 1.5V max at IF 1.0A.
48	BZW70-13	6	Si	A283a	VR 13V;VBR 15.3V;IR 100uA;VF 1.5V max at IF 1.0A.
49	BZW70-15	6	Si	A283a	VR 15V;VBR 16.8V;IR 100uA;VF 1.5V max at IF 1.0A.
50	BZW70-16	6	Si	A283a	VR 16V;VBR 18.8V;IR 100uA;VF 1.5V max at IF 1.0A.
51	BZW70-18	6	Si	A283a	VR 18V;VBR 20.8V;IR 100uA;VF 1.5V max at IF 1.0A.
52	BZW70-20	6	Si	A283a	VR 20V;VBR 22.8V;IR 100uA;VF 1.5V max at IF 1.0A.
53	BZW70-22	6	Si	A283a	VR 22V;VBR 25V;IR 100uA;VF 1.5V max at IF 1.0A.
54	BZW70-24	6	Si	A283a	VR 24V;VBR 28V;IR 100uA;VF 1.5V max at IF 1.0A.
55	BZW70-27	6	Si	A283a	VR 27V;VBR 31V;IR 100uA;VF 1.5V max at IF 1.0A.
56	BZW70-30	6	Si	A283a	VR 30V;VBR 34V;IR 100uA;VF 1.5V max at IF 1.0A.
57	BZW70-33	6	Si	A283a	VR 33V;VBR 37V;IR 100uA;VF 1.5V max at IF 1.0A.
58	BZW70-36	6	Si	A283a	VR 36V;VBR 40V;IR 100uA;VF 1.5V max at IF 1.0A.
59	BZW70-39	6	Si	A283a	VR 39V;VBR 44V;IR 100uA;VF 1.5V max at IF 1.0A.
60	BZW70-43	6	Si	A283a	VR 43V;VBR 48V;IR 100uA;VF 1.5V max at IF 1.0A.
61	BZW70-47	6	Si	A283a	VR 47V;VBR 52V;IR 100uA;VF 1.5V max at IF 1.0A.
62	BZW70-51	6	Si	A283a	VR 51V;VBR 58V;IR 100uA;VF 1.5V max at IF 1.0A.
63	BZW70-56	6	Si	A283a	VR 56V;VBR 64V;IR 100uA;VF 1.5V max at IF 1.0A.
64	BZW70-62	6	Si	A283a	VR 62V;VBR 70V;IR 100uA;VF 1.5V max at IF 1.0A.
65♦	CP2009	6	Si △	A1aap	VRM 7.37V;VBR 8.19-10.0 Vat It 1.0mA;IR 100uA;Vc 13.0V at IRSM 115.0 A;BiDi
66	CP2009A	6	Si △	A1aap	VRM 7.78V;VBR 8.65-9.55V at It 1.0mA;IR 100uA;Vc 12.40V at IRSM 121.0A;BiDi
67	CP2010	6	Si △	A1aap	VRM 8.10V;VBR 9.0-11.0V at It 1.0mA;IR 20uA;Vc 14.30V at IRSM 105.0A;BiDi
68	CP2010A	6	Si △	A1aap	VRM 8.55V;VBR 9.5-10.50V at It 1.0mA;IR 20.0uA;Vc 13.70V at IRSM 110A;BiDi
69	CP2011	6	Si △	A1aap	VRM 8.92V;VBR 9.9-12.10V at It 1.0mA;IR 10.0uA;Vc 15.70V at IRSM 95.0A;BiDi
70	CP2011A	6	Si △	A1aap	VRM 9.40V;VBR 10.5-11.60V at It 1.0mA;IR 10.0uA;Vc 15.10V at IRSM 99.0A;BiDi
71	CP2012	6	Si △	A1aap	VRM 9.72V;VBR 10.8-13.20V at It 1.0mA;IR 10.0uA;Vc 17.20V at IRSM 87.0A;BiDi
72	CP2012A	6	Si △	A1aap	VRM 10.20V;VBR 11.4-12.60V at It 1.0mA;IR 10.0uA;Vc 16.40V at IRSM 92A;BiDi
73	CP2013	6	Si △	A1aap	VRM 10.50V;VBR 11.7-14.30V at It 1.0mA;IR 10.0uA;Vc 18.60V at IRSM 81.0A;BiDi
74	CP2013A	6	Si △	A1aap	VRM 11.10V;VBR 12.4-13.70V at It 1.0mA;IR 10.0uA;Vc 17.80V at IRSM 84.0A;BiDi
75	CP2015	6	Si △	A1aap	VRM 12.10V;VBR 13.5-16.50V at It 1.0mA;IR 10.0uA;Vc 21.50V at IRSM 70A;BiDi
76♦	CP2015A	6	Si △	A1aap	VRM 12.80V;VBR 14.3-15.80VatIt 1.0mA;IR 10.0uA;Vc 20.50Vat IRSM 73.0A;BiDi
77	CP2016	6	Si △	A1aap	VRM 12.90V;VBR 14.4-17.60V at It 1.0mA;IR 10.0uA;Vc 22.90V at IRSM 66.0A;BiDi
78	CP2016A	6	Si △	A1aap	VRM 13.60V;VBR 15.2-16.80V at It 1.0mA;IR 10.0uA;Vc 21.80V at IRSM 68.0A;BiDi
79	CP2018	6	Si △	A1aap	VRM 14.50V;VBR 16.2-19.80V at It 1.0mA;IR 10.0uA;Vc 25.70V at IRSM 58.0A;BiDi
80	CP2018A	6	Si △	A1aap	VRM 15.3V;VBR 17.1-18.90V at It 1.0mA;IR 10.0uA;Vc 24.60V at IRSM 61.0A;BiDi
81	CP2020	6	Si △	A1aap	VRM 16.2V;VBR 18-22.0V at It 1.0mA;IR 10.0uA;Vc 28.60V at IRSM 52.0A;BiDi
82	CP2020A	6	Si △	A1aap	VRM 17.10V;VBR 19-21.00V at It 1.0mA;IR 10.0uA;Vc 27.30V at IRSM 55.0A;BiDi
83♦	CP2022	6	Si △	A1aap	VRM 17.80V;VBR 19.8-24.20 VatIt 1.0mA;IR 10.0uA;Vc 31.50Vat IRSM 47.0 A;BiDi
84	CP2022A	6	Si △	A1aap	VRM 18.80V;VBR 20.9-23.10V at It 1.0mA;IR 10.0uA;Vc 30.0V at IRSM 50.0A;BiDi
85	CP2024	6	Si △	A1aap	VRM 19.40V;VBR 21.6-26.40V at It 1.0mA;IR 10.0uA;Vc 34.30V at IRSM 44.0A;BiDi
86	CP2024A	6	Si △	A1aap	VRM 20.50V;VBR 22.8-25.20V at It 1.0mA;IR 10.0uA;Vc 32.80V at IRSM 46.0A;BiDi
87	CP2027	6	Si △	A1aap	VRM 21.80V;VBR 24.3-29.70V at It 1.0mA;IR 10.0uA;Vc 38.60V at IRSM 39.0A;BiDi
88	CP2027A	6	Si △	A1aap	VRM 23.10V;VBR 25.7-28.40V at It 1.0mA;IR 10.0uA;Vc 36.90V at IRSM 41.0A;BiDi
89	CP2030	6	Si △	A1aap	VRM 24.30V;VBR 27-33.00V at It 1.0mA;IR 10.0uA;Vc 42.90V at IRSM 35.0A;BiDi
90♦	CP2030A	6	Si △	A1aap	VRM 25.60V;VBR 28.5-31.50 VatIt 1.0mA;IR 10.0uA;Vc 40.90Vat IRSM 37.0 A;BiDi
91	CP2033	6	Si △	A1aap	VRM 26.80V;VBR 29.7-36.30V at It 1.0mA;IR 10.0uA;Vc 47.2V at IRSM 32.0A;BiDi
92	CP2033A	6	Si △	A1aap	VRM 28.2V;VBR 31.4-34.70V at It 1.0mA;IR 10.0uA;Vc 45.1V at IRSM 33.0A;BiDi
93	CP2036	6	Si △	A1aap	VRM 29.1V;VBR 32.4-39.60V at It 1.0mA;IR 10.0uA;Vc 51.50V at IRSM 29.2A;BiDi
94	CP2036A	6	Si △	A1aap	VRM 30.80V;VBR 34.2-37.80V at It 1.0mA;IR 10.0uA;Vc 49.10V at IRSM 30.4A;BiDi
95	CP2039	6	Si △	A1aap	VRM 31.60V;VBR 35.1-42.90V at It 1.0mA;IR 10.0uA;Vc 55.8V at IRSM 26.9A;BiDi
96	CP2039A	6	Si △	A1aap	VRM 33.30V;VBR 37.1-41.0V at It 1.0mA;IR 10.0uA;Vc 53.3V at IRSM 28.2A;BiDi
97	CP2043	6	Si △	A1aap	VRM 34.80V;VBR 38.7-47.30V at It 1.0mA;IR 10.0uA;Vc 61.50V at IRSM 24.4A;BiDi
98	CP2043A	6	Si △	A1aap	VRM 36.80V;VBR 40.9-45.20V at It 1.0mA;IR 10.0uA;Vc 58.80V at IRSM 25.5A;BiDi
99	CP2047	6	Si △	A1aap	VRM 38.10V;VBR 42.3-51.70V at It 1.0mA;IR 10.0uA;Vc 67.20V at IRSM 22.3A;BiDi
100	CP2047A	6	Si △	A1aap	VRM 50.20V;VBR 44.7-49.40V at It 1.0mA;IR 10.0uA;Vc 64.20V at IRSM 23.3A;BiDi
101	CP2051	6	Si △	A1aap	VRM 41.30V;VBR 45.9-56.10V at It 1.0mA;IR 10.0uA;Vc 72.90V at IRSM 20.6A;BiDi
102	CP2051A	6	Si △	A1aap	VRM 43.60V;VBR 48.5-53.60V at It 1.0mA;IR 10.0uA;Vc 69.70V at IRSM 21.5A;BiDi
103	CP2056	6	Si △	A1aap	VRM 45.50V;VBR 50.4-61.60V at It 1.0mA;IR 10.0uA;Vc 80.10V at IRSM 18.7A;BiDi
104	CP2056A	6	Si △	A1aap	VRM 47.80V;VBR 53.2-58.80V at It 1.0mA;IR 10.0uA;Vc 76.40V at IRSM 19.6A;BiDi
105	CP2062	6	Si △	A1aap	VRM 50.20V;VBR 55.8-68.20V at It 1.0mA;IR 10.0uA;Vc 88.0V at IRSM 17.0A;BiDi
106	CP2062A	6	Si △	A1aap	VRM 53.0V;VBR 58.9-65.10V at It 1.0mA;IR 10.0uA;Vc 84.00V at IRSM 17.8A;BiDi
107	CP2068	6	Si △	A1aap	VRM 55.10V;VBR 61.2-74.80V at It 1.0mA;IR 10.0uA;Vc 97.0V at IRSM 15.0A;BiDi
108	CP2068A	6	Si △	A1aap	VRM 58.10V;VBR64.6-71.40V at It 1.0mA;IR 10uA;Vc 92.0V at IRSM 16.3A;BiDi
109	CP2075	6	Si △	A1aap	VRM 60.7V;VBR 67.5-82.50V at It 1.0mA;IR 10uA;Vc 107.0V at IRSM 14.0A;BiDi
110	CP2075A	6	Si △	A1aap	VRM 64.10V;VBR 71.3-78.80V at It 1.0mA;IR 10.0uA;Vc 102.0V at IRSM 14.7A;BiDi

7. TRANSIENT SUPPRESSOR DIODES - Bipolar & Unipolar Types (Cont'd)

IN ORDER OF (1) TYPE (2) MAT AND (3) TYPE NO.

LINE No.	3 TYPE NUMBER	1 TYPE	2 MAT.	DWG. NO.	DESCRIPTION
1	CP2082	6	Si Δ	A1aap	VRM 66.4V;VBR 73.8-90.20V at It 1.0mA;IR 10.0uA;Vc 117.0V at IRSM 12.8A;BiDi
2	CP2082A	6	Si Δ	A1aap	VRM 70.10V;VBR 77.9-86.10V at It 1.0mA;IR 10.0uA;Vc 111.0V at IRSM 13.5A;BiDi
3	CP2091	6	Si Δ	A1aap	VRM 73.7V;VBR 81.9-100.0V at It 1.0mA;IR 10.0uA;Vc 130.0V at IRSM 11.50A;BiDi
4	CP2091A	6	Si Δ	A1aap	VRM 77.8V;VBR 86.5-95.50V at It 1.0mA;IR 10.0uA;Vc 124.0V at IRSM 12.1A;BiDi
5	CP2100	6	Si Δ	A1aap	VRM 81.0V;VBR 90.0-110.0V at It 1.0mA;IR 10.0uA;Vc 143.0V at IRSM 10.5A;BiDi
6	CP2100A	6	Si Δ	A1aap	VRM 85.5V;VBR 95-105.80V at It 1.0mA;IR 10uA;Vc 136.0V at IRSM 11.0A;BiDi
7	CP2110	6	Si Δ	A1aap	VRM 89.0V;VBR 99-121.0V at It 1.0mA;IR 10uA;Vc 157.0V at IRSM 9.50A;BiDi
8♦	CP2110A	6	Si Δ	A1aap	VRM 94.0V;VBR105-116.0V at It 1.0mA;IR 10uA;Vc 150.0V at IRSM 10.0A;BiDi
9	CP2120	6	Si Δ	A1aap	VRM 97.0V;VBR 108-132.0V at It 1.0mA;IR 10.0uA;Vc 171.0V at IRSM 8.8A;BiDi
10♦	CP2130	6	Si Δ	A1aap	VRM 105.0V;VBR117-143.0V at It 1.0mA;IR 10.0uA;Vc 185.0V at IRSM 8.10A;BiDi
11♦	CP2130A	6	Si Δ	A1aap	VRM 111.0V;VBR124-137.0V at It 1.0mA;IR 10.0uA;Vc 178.0V at IRSM 8.40A;BiDi
12	CP2140	6	Si Δ	A1aap▼	VBR 154; Ir Max 5.0u at VR 113V; Irms 36mA Temp Jmax 175°C
13♦	CP2150	6	Si Δ	A1aap	VRM 121.0V;VBR 135-165.0V at It 1.0mA;IR 10.0uA;Vc 214.0V at IRSM 7.00A;BiDi
14♦	CP2150A	6	Si Δ	A1aap	VRM 128.0V;VBR 143-158.0V at It 1.0mA;IR 10.0uA;Vc 205.0V at IRSM 7.30A;BiDi
15♦	CP2160	6	Si Δ	A1aap	VRM 130.0V;VBR 144-176.0V at It 1.0mA;IR 10.0uA;Vc 228.0V at IRSM 6.60A;BiDi
16♦	CP2160A	6	Si Δ	A1aap	VRM 136.0V;VBR 152-168.0V at It 1.0mA;IR 10.0uA;Vc 218.0V at IRSM 6.80A;BiDi
17♦	CP2170	6	Si Δ	A1aap	VRM 138.0V;VBR 153-187.0V at It 1.0mA;IR 10.0uA;Vc 243.0V at IRSM 6.20A;BiDi
18♦	CP2170A	6	Si Δ	A1aap	VRM 154.0V;VBR 162-179.0V at It 1.0mA;IR 10.0uA;Vc 232.0V at IRSM 6.40A;BiDi
19	CP2180	6	Si Δ	A1aap	VRM 146.0V;VBR 162-198.0V at It 1.0mA;IR 10.0uA;Vc 257.0V at IRSM 5.8A;BiDi
20♦	CP2180A	6	Si Δ	A1aap	VRM 154.0V;VBR 171-189.0V at It 1.0mA;IR 10.0uA;Vc 245.0V at IRSM 6.10A;BiDi
21♦	CP2200	6	Si Δ	A1aap	VRM 162.0V;VBR 180-220.0V at It 1.0mA;IR 10.0uA;Vc 286.0V at IRSM 5.20A;BiDi
22♦	CP2200A	6	Si Δ	A1aap	VRM 171.0V;VBR 190-210.0V at It 1.0mA;IR 10.0uA;Vc 273.0V at IRSM 5.50A;BiDi
23	CP2220	6	Si Δ	A1aap	VRM 175.0V;VBR 198-242V at It 1.0mA;IR 10.0uA;Vc 314.0V at IRSM 4.80A;BiDi
24♦	CP2220A	6	Si Δ	A1aap	VRM 185.0V;VBR 209-231.0V at It 1.0mA;IR 10.0uA;Vc 300.0V at IRSM 5.0A;BiDi
25	CP2250	6	Si Δ	A1aap	VRM 202V;VBR 225-275.0V at It 1.0mA;IR 10.0uA;Vc 357.0V at IRSM 4.2A;BiDi
26♦	CP2250A	6	Si Δ	A1aap	VRM 214.0V;VBR 237-263.0V at It1.0mA;IR10.0uA;Vc341.0Vat IRSM 4.4A;BiDi
27	CP2275	6	Si Δ	A1aap	VRM 223V;VBR 247.5-302.5V at It 1.0mA;Ir 10.0uA;Vc 393V at IRSM 3.8A;BiDi
28♦	CP2275A	6	Si Δ	A1aap	VRM 235.0V;VBR 261.3-288.80V at It 10.mA;IR10.0uA;Vc375.0Vat IRSM 4.0A;BiDi
29♦	CP3009	6	Si Δ	A1aaq	VRM 7.37V;VBR 8.19-10.00V at It 10.0mA;IR 100.0uA;Vc 13.50V at IRSM 259A;BiDi
30	CP3009A	6	Si Δ	A1aaq	VRM 7.780V;VBR 8.65-9.550V at It 1.0mA;IR 100.0uA;Vc 12.90V at IRSM 271A;BiDi
31♦	CP3010	6	Si Δ	A1aaq	VRM 8.10V;VBR 9-11.00V at It 1.0mA;IR 20.0uA;Vc 14.90V at IRSM 235A;BiDi
32	CP3010A	6	Si Δ	A1aaq	VRM 8.550V;VBR 9.5-10.500V at It 1.0mA;IR 20.0uA;Vc 14.20V at IRSM 246A;BiDi
33	CP3011	6	Si Δ	A1aaq	VRM 8.92V;VBR 9.9-12.10V at It 1.0mA;IR 10.0uA;Vc 16.30V at IRSM 215A;BiDi
34	CP3011A	6	Si Δ	A1aaq	VRM 9.40V;VBR 10.5-11.60V at it 1.0mA;IR 10.0uA;Vc 15.70V at IRSM 223A;BiDi
35	CP3012	6	Si Δ	A1aaq	VRM 9.720V;VBR 10.8-13.20V at it 1.0mA;IR 10.0uA;Vc 17.80V at IRSM 197A;BiDi
36	CP3012A	6	Si Δ	A1aaq	VRM 10.20V;VBR 11.4-12.60V at it 1.0mA;IR 10.0uA;Vc 17.0V at IRSM 206A;BiDi
37	CP3013	6	Si Δ	A1aaq	VRM 10.50V;VBR 11.7-14.30V at it 1.0mA;IR 10.0uA;Vc 19.30V at IRSM 181A;BiDi
38	CP3013A	6	Si Δ	A1aaq	VRM 11.10V;VBR 12.4-13.70V at It 1.0mA;IR 10.0uA;Vc 18.50V at IRSM 189.0A;BiDi
39	CP3015	6	Si Δ	A1aaq	VRM 12.10V;VBR 13.5-16.50V at It 1.0mA;IR 10.0uA;Vc 22.30V at IRSM 157.0A;BiDi
40	CP3015A	6	Si Δ	A1aaq	VRM 12.80V;VBR 14.3-15.80V at It 1.0mA;IR 10.0uA;Vc 21.30V at IRSM 164.0A;BiDi
41	CP3016	6	Si Δ	A1aaq	VRM 12.90V;VBR 14.4-17.60V at It 1.0mA;IR 10.0uA;Vc 23.80V at IRSM 147A;BiDi
42	CP3016A	6	Si Δ	A1aaq	VRM 13.60V;VBR 15.2-16.80V at It 1.0mA;IR 10.0uA;Vc 22.70V at IRSM 154.0A;BiDi
43	CP3018	6	Si Δ	A1aaq	VRM 14.50V;VBR 16.2-19.80V at It 1.0mA;IR 10.0uA;Vc 26.70V at IRSM 131.0A;BiDi
44	CP3018A	6	Si Δ	A1aaq	VRM 15.30V;VBR 17.1-18.90V at It 1.0mA;IR 10.0uA;Vc 25.50V at IRSM 137A;BiDI
45	CP3020	6	Si Δ	A1aaq	VRM 16.20V;VBR 18-22.00V at It 1.0mA;IR 10.0uA;Vc 29.70V at IRSM 118.0A;BiDi
46	CP3020A	6	Si Δ	A1aaq	VRM 17.10V;VBR 19-21.00V at It 1.0mA;IR 10.0uA;Vc 28.40V at IRSM 123.0A;BiDi
47	CP3022	6	Si Δ	A1aaq	VRM 17.80V;VBR 19.8-24.20V at It 1.0mA;IR 10.0uA;Vc 32.70V at IRSM 107A;BiDi
48	CP3022A	6	Si Δ	A1aaq	VRM 18.80V;VBR 20.9-23.10V at It 1.0mA;IR 10.0uA;Vc 31.20V at IRSM 112A;BiDi
49	CP3024	6	Si Δ	A1aaq	VRM 19.40V;VBR 21.6-26.40V at It 1.0mA;IR 10.0uA;Vc 35.60V at IRSM 98.0A;BiDi
50	CP3024A	6	Si Δ	A1aaq	VRM 20.50V;VBR 22.8-25.20V at It 1.0mA;IR 10.0uA;Vc 34.0V at IRSM 103A;BiDi
51	CP3027	6	Si Δ	A1aaq	VRM 21.80V;VBR 24.3-29.70V at It 1.0mA;IR 10.0uA;Vc 40.10V at IRSM 87.3A;BiDi
52	CP3027A	6	Si Δ	A1aaq	VRM 23.10V;VBR 25.7-28.40V at It 1.0mA;IR 10.0uA;Vc 38.30V at IRSM 91.4A;BiDi
53	CP3030	6	Si Δ	A1aaq	VRM 24.33V;VBR 27-33.00V at It 1.0mA;IR 10.0uA;Vc 44.50V at IRSM 78.7A;BiDi
54	CP3030A	6	Si Δ	A1aaq	VRM 25.60V;VBR 28.5-31.50V at It 1.0mA;IR 10.0uA;Vc 42.50V at IRSM 82.4A;BiDi
55	CP3033	6	Si Δ	A1aaq	VRM 26.80V;VBR 29.7-36.30V at It 1.0mA;IR 10.0uA;Vc 49.0V at IRSM 71.4A;BiDi
56	CP3033A	6	Si Δ	A1aaq	VRM 28.20V;VER 31.4-34.70V at It 1.0mA;IR 10.0uA;Vc 46.80V at IRSM 74.8A;BiDi
57	CP3036	6	Si Δ	A1aaq	VRM 29.10V;VBR 32.4-39.60V at It 1.0mA;IR 10.0uA;Vc 53.40V at IRSM 65.5A;BiDi
58	CP3036A	6	Si Δ	A1aaq	VRM 30.80V;VBR 34.2-37.80V at It 1.0mA;IR 10.0uA;Vc 51.0V at IRSM 68.6A;BiDi
59	CP3039	6	Si Δ	A1aaq	VRM 31.60V;VBR 35.1-42.90V at It 1.0mA;IR 10.0uA;Vc 58.0V at IRSM 60.3A;BiDi
60	CP3039A	6	Si Δ	A1aaq	VRM 33.30V;VBR 37.1-41.0V at It 1.0mA;IR 10.0uA;Vc 55.3V at IRSM 63.3A;BiDi
61	CP3043	6	Si Δ	A1aaq	VRM 34.80V;VBR 38.7-47.3V at It 1.0mA;IR 10.0uA;Vc 63.9V at IRSM 54.8A;BiDi
62	CP3043A	6	Si Δ	A1aaq	VRM 36.80V;VBR 40.9-45.20V at It 1.0mA;IR 10.0uA;Vc 61.0V at IRSM 57.4A;BiDi
63	CP3047	6	Si Δ	A1aaq	VRM 38.10V;VBR 42.3-51.70V at It 1.0mA;IR 10.0uA;Vc 69.8V at IRSM 50.1A;BiDi
64	CP3047A	6	Si Δ	A1aaq	VRM 40.20V;VBR 44.7-49.40V at It 1.0mA;IR 10.0uA;Vc 66.70V at IRSM 52.5A;BiDi
65	CP3051	6	Si Δ	A1aaq	VRM 41.30V;VBR 45.9-56.10V at It 1.0mA;IR 10.0uA;Vc 75.30V at IRSM 46.5A;BiDi
66	CP3051A	6	Si Δ	A1aaq	VRM 43.60V;VBR 48.5-53.60V at It 1.0mA;IR 10.0uA;Vc 72.30V at IRSM 48.4A;BiDi
67	CP3056	6	Si Δ	A1aaq	VRM 45.5V;VBR 50.4-61.60V at It 1.0mA;Ir 10.0uA;Vc 83.10V at IRSM 42.1A;BiDi
68	CP3056A	6	Si Δ	A1aaq	VRM 47.80V;VBR 53.2-58.80V at It 1.0mA;IR 10.0uA;Vc 79.4V at IRSM 44.1A;BiDi
69	CP3062	6	Si Δ	A1aaq	VRM 50.2V;VBR 55.8-68.20V at It 1.0mA;Ir 10.0uA;Vc 92.0V at IRSM 38.0A;BiDi
70	CP3062A	6	Si Δ	A1aaq	VRM 53.00V;VBR 58.9-65.10V at It 1.0mA;IR 10.0uA;Vc 87.0V at IRSM 40.2A;BiDi
71	CP3068	6	Si Δ	A1aaq	VRM 55.1V;VBR 61.2-74.80V at It 1.0mA;Ir 10.0uA;Vc 101.0V at IRSM 34.7A;BiDi
72	CP3068A	6	Si Δ	A1aaq	VRM 58.10V;VBR 64.6-71.40V at It 1.0mA;IR 10.0uA;Vc 96.0V at IRSM 36.4A;BiDi
73	CP3075	6	Si Δ	A1aaq	VRM 60.70V;VBR 67.5-82.50V at It 1.0mA;IR 10.0uA;Vc 111.0V at IRSM 31.5A;BiDi
74	CP3075A	6	Si Δ	A1aaq	VRM 64.10V;VBR 71.3-78.80V at It 1.0mA;IR 10.0uA;Vc 106.0V at IRSM 33.0A;BiDi
75	CP3082	6	Si Δ	A1aaq	VRM 66.40V;VBR 73.8-90.20V at It 1.0mA;IR 10.0uA;Vc 121.0V at IRSM 28.9A;BiDi
76	CP3082A	6	Si Δ	A1aaq	VRM 70.10V;VBR 77.9-86.10V at It 1.0mA;IR 10.0uA;Vc 116.0V at IRSM 30.1A;BiDi
77	CP3091	6	Si Δ	A1aaq	VRM 73.7V;VBR 81.9-100.0V at It1.0mA;IR 10.0uA;Vc 135.0V at IRSM 25.9A;BiDi
78♦	CP3091A	6	Si Δ	A1aaq	VRM 77.8V;VBR 86.5-95.50V at iT1.0mA;IR 10.0uA;Vc 128.0V at IRSM 27.4A;BiDi
79	CP3100	6	Si Δ	A1aaq	VRM 81.0V;VBR 90-110.0V at It1.0mA;IR 10.0uA;Vc 148.0V at IRSM 23.7A;BiDi
80	CP3100A	6	Si Δ	A1aaq	VRM 85.5V;VBR 95-105.0V at It1.0mA;IR 10.0uA;Vc 141.0V at IRSM 24.8A;BiDi
81	CP3110	6	Si Δ	A1aaq	VRM 89.0V;VBR 99-121.0V at It1.0mA;IR 10.0uA;Vc 163.0V at IRSM 21.4A;BiDi
82	CP3110A	6	Si Δ	A1aaq	VRM 94.0V;VBR 105-116.0V at It1.0mA;IR 10.0uA;Vc 156.0V at IRSM 22.4A;BiDi
83	CP3120	6	Si Δ	A1aaq	VRM 97.0V;VBR 108-132.0V at It 1.0mA;Ir 10.0uA;Vc 178.0V at IRSM 19.60A;BiDi
84	CP3120A	6	Si Δ	A1aaq	VRM 102.0V;VBR 114-126.0V at It1.0mA;IR 10.0uA;Vc 170.0V at IRSM 20.6A;BiDi
85	CP3130	6	Si Δ	A1aaq	VRM 105.0V;VBR 117-143.0V at It1.0mA;IR 10.0uA;Vc 193.0V at IRSM 18.1A;BiDi
86♦	CP3130A	6	Si Δ	A1aaq	VRM 111.0V;VBR 124-137.01V at It 1.0mA;IR 10.0uA;Vc 184.0V at IRSM 19.0A;BiDi
87	CP3140	6	Si Δ	A1aaq	VBR 154; IR Max 5.0u at VR 113V; Cap Max 1200pF; Temp Jmax 175°C
88	CP3150	6	Si Δ	A1aaq	VRM 121.0V;VBR 135-165.0V at It1.0mA;IR 10.0uA;Vc 222.0V at IRSM 15.7A;BiDi
89	CP3150A	6	Si Δ	A1aaq	VRM 128.0V;VBR 143-158.0V at It1.0mA;IR 10.0uA;Vc 213.0V at IRSM 16.4A;BiDi
90	CP3160	6	Si Δ	A1aaq	VRM 130.0V;VBR 144-176.0V at It1.0mA;IR 10.0uA;Vc 237.0V at IRSM 14.7A;BiDi
91	CP3160A	6	Si Δ	A1aaq	VRM 136.0V;VBR 152-168.0V at It1.0mA;IR 10uA;Vc 226V at IRSM 15.4A;BiDi
92	CP3170	6	Si Δ	A1aaq	VRM 138.0V;VBR 153-187.0V at It1.0mA;IR 10uA;Vc 252V at IRSM 13.9A;BiDi
93	CP3170A	6	Si Δ	A1aaq	VRM 145.0V;VBR 162-179.0V at It1.0mA;IR 10uA;Vc 241.0V at IRSM 14.5A;BiDi
94	CP3180	6	Si Δ	A1aaq	VRM 146.0V;VBR 162-198.0V at It 1.0mA;Ir 10.0uA;Vc 267.0 at IRSM 13.10A;BiDi
95	CP3180A	6	Si Δ	A1aaq	VRM 154.0V;VBR 171-189.0V at It1.0mA;IR 10uA;Vc 255.0V at IRSM 13.7A;BiDi
96	CP3200	6	Si Δ	A1aaq	VRM 162.0V;VBR 180-220.0V at It1.0mA;IR 10uA;Vc 297.0V at IRSM 11.8A;BiDi
97	CP3200A	6	Si Δ	A1aaq	VRM 171.0V;VBR 190-210.0V at It1.0mA;IR 10uA;Vc 283.0V at IRSM 12.3A;BiDi
98	CP3220	6	Si Δ	A1aaq	VRM 175.0V;VBR 198-242.0V at It 1.0mA;Ir 10.0uA;Vc 326.0 at IRSM 10.7A;BiDi
99	CP3220A	6	Si Δ	A1aaq	VRM 185.0V;VBR 209-231.0V at It1.0mA;IR 10uA;Vc 311.0V at IRSM 11.2A;BiDi
100	CP3250	6	Si Δ	A1aaq	VRM 202.0V;VBR 225-275.0V at It1.0mA;IR 10uA;Vc 371.0V at IRSM 9.4A;BiDi
101	CP3250A	6	Si Δ	A1aaq	VRM 214.0V;VBR 237-263.0V at It1.0mA;IR 10uA;Vc 355.0V at IRSM 9.9A;BiDi
102	CP3275	6	Si Δ	A1aaq	VRM 223.0V;VBR 247.5-302.5V at It 1.0mA;IR 10.0uA;Vc 408.0V at IRSM 8.60A;BiDi
103	CP3275A	6	Si Δ	A1aaq	VRM 235.0V;VBR 261.3-288.8V at It1.0mA;IR 10uA;Vc 389.0V at IRSM 9.0A;BiDi
104	DFP027	6	Si Δ	A1aaq	Double Bidirectional Clamp,3 leads;VBR 29.7 at 1000uA;IR Max.10uA;TJ125°C
105	DFP068	6	Si Δ	A1aaq	Double Bidirectional Clamp,3 leads;VBR 74.8 at 1.0uA;IR Max.10uA;TJ125°C
106	DFP140	6	Si Δ	A1aaq	Double Bidirectional Clamp,3 leads;VBR 154 at 1.0uA;IR Max.10uA;TJ125°C
107	DFP180	6	Si Δ	A1aaq	Double Bidirectional Clamp,3 leads;VBR 198 at 1.0uA;IR Max.10uA;TJ125°C
108	DFP240	6	Si Δ	A1aaq	Double Bidirectional Clamp,3 leads;VBR 264 at 1.0uA;IR Max.10uA;TJ125°C
109	DS5	6	Si	M1234	Stabilizer VRB 5V;IFM 30mA;PD 200mW max;VF 1.0V at 30mA;Tj 125max
110	DSAS05-0	6	Si	F103	Surge Voltage Suppressors;VBR 425V;IRM 1.0kA;PRAV 30W;PRSM 800kW.

7. TRANSIENT SUPPRESSOR DIODES - Bipolar & Unipolar Types (Cont'd)

IN ORDER OF (1) TYPE (2) MAT AND (3) TYPE NO.

LINE No.	3 TYPE NUMBER	1 TYPE	2 MAT.	DWG. NO.	DESCRIPTION
1	DSAS05-2	6	Si	F103	Surge Voltage Suppressors;VBR 475V;IRM 1.0kA;PRAV 30W;PRSM 800kW.
2	DSAS05-4	6	Si	F103	Surge Voltage Suppressors;VBR 525V;IRM 1.0kA;PRAV 30W;PRSM 800kW.
3	DSAS05-6	6	Si	F103	Surge Voltage Suppressors;VBR 575V;IRM 1.0kA;PRAV 30W;PRSM 800kW.
4	DSAS5U	6	Si	S528	VRRM 500V; IRRM 70 A at 50Hz; PRSM 350kW(10us); Cont Pwr Diss During Avalanche 30W
5	DSAS6U	6	Si	S528	VRRM 600V; IRRM 70 A at 50Hz; PRSM 350kW (10us); Cont Pwr Diss During Avalanche 30W
6	DSAS07-0	6	Si	F103	Surge Voltage Suppressors;VBR 625V;IRM 850A;PRAV 30W;PRSM 800kW.
7	DSAS07-2	6	Si	F103	Surge Voltage Suppressors;VBR 675V;IRM 850A;PRAV 30W;PRSM 800kW.
8	DSAS07-4	6	Si	F103	Surge Voltage Suppressors;VBR 725V;IRM 850A;PRAV 30W;PRSM 800kW.
9	DSAS07-6	6	Si	F103	Surge Voltage Suppressors;VBR 775V;IRM 850A;PRAV 30W;PRSM 800kW.
10	DSAS7U	6	Si	S528	VRRM 700V; IRRM 60 A at 50Hz; PRSM 350kW (10us); Cont Pwr Diss During Avalanche 30W
11	DSAS8U	6	Si	S528	VRRM 800V;IRRM 60A at 50Hz;PRSM 350kW(10us);Cont Pwr Diss During Avalanche 30W
12	DSAS9U	6	Si	S528	VRRM 900V;IRRM 50A at 50Hz;PRSM 350kW(10us);Cont Pwr Diss During Avalanche 30W
13	DSAS10U	6	Si	S528	VRRM 1.0kV;IRRM 50A at 50Hz;PRSM 350kW(10us);Cont Pwr Diss During Avalanche 30W
14	DSAS11U	6	Si	S528	VRRM 1.1kV;IRRM 41A at 50Hz;PRSM 350kW(10us);Cont Pwr Diss During Avalanche 30W
15	DSAS12U	6	Si	S528	VRRM 1.2kV;IRRM 41A at 50Hz;PRSM 350kW(10us);Cont Pwr Diss During Avalanche 30W
16	DSAS13U	6	Si	S528	VRRM 1.3kV;IRRM 35A at 50Hz;PRSM 350kW(10us);Cont Pwr Diss During Avalanche 30W
17	DSAS14U	6	Si	S528	VRRM 1.4kV;IRRM 35A at 50Hz;PRSM 350kW(10us);Cont Pwr Diss During Avalanche 30W
18	DSAS15U	6	Si	S528	VRRM 1.5kV;IRRM 30A at 50Hz;PRSM 350kW(10us);Cont Pwr Diss During Avalanche 30 W
19	DSAS16U	6	Si	S528	VRRM 1.6kV;IRRM 30A at 50Hz;PRSM 350kW(10us);Cont Pwr Diss During Avalanche 30W
20	DTZ7V5A	6	Si	A398k	IRM 500uA at 6.4VRM;7.88V(BR) max at IR 10mA;11.3V(CL) at Ipp 132A;Bidirectional
21	DTZ8V2A	6	Si	A398k	IRM 200uA at 7.02VRM;8.61V(BR) max at IR 10mA;12.1V(CL) at Ipp 124A;Bidirectional
22	DTZ9V1A	6	Si	A398k	IRM 50uA at 7.78VRM;9.55V(BR) max at IR 10mA;13.4V(CL) at Ipp 112A;Bidirectional
23	DTZ10A	6	Si	A398k	IRM 10uA at 8.55VRM;10.5V(BR) max at IR 1.0mA;14.5V(CL) at Ipp 103A;Bidirectional
24	DTZ11A	6	Si	A398k	IRM 5.0uA at 9.4VRM;11.6V(BR) max at IR 1.0mA;15.6V(CL) at Ipp 96A;Bidirectional
25	DTZ12A	6	Si	A398k	IRM 5.0uA at 10.2VRM;12.6V(BR) max at IR 1.0mA;16.7V(CL) at Ipp 90A;Bidirectional
26	DTZ13A	6	Si	A398k	IRM 5.0uA at 11.1VRM;13.7V(BR) max at IR 1.0mA;18.2V(CL) at Ipp 82A;Bidirectional
27	DTZ15A	6	Si	A398k	IRM 5.0uA at 12.8VRM;15.8V(BR) max at IR 1.0mA;21.2V(CL) at Ipp 71A;Bidirectional
28	DTZ16A	6	Si	A398k	IRM 5.0uA at 13.6VRM;16.8V(BR) max at IR 1.0mA;22.5V(CL) at Ipp 67A;Bidirectional
29	DTZ18A	6	Si	A398k	IRM 5.0uA at 15.3VRM;18.9V(BR) max at IR 1.0mA;25.2V(CL) at Ipp 59.5A;Bidirectional
30	DTZ20A	6	Si	A398k	IRM 5.0uA at 17.1VRM;21V(BR) max at IR 1.0mA;27.7V(CL) at Ipp 54A;Bidirectional
31	DTZ22A	6	Si	A398k	IRM 5.0uA at 18.8VRM;23.1V(BR) max at IR 1.0mA;30.6V(CL) at Ipp 49A;Bidirectional
32	DTZ24A	6	Si	A398k	IRM 5.0uA at 20.5VRM;25.2V(BR) max at IR 1.0mA;33.2V(CL) at Ipp 45A;Bidirectional
33	DTZ27A	6	Si	A398k	IRM 5.0uA at 23.1VRM;28.4V(BR) max at IR 1.0mA;37.5V(CL) at Ipp 40A;Bidirectional
34	DTZ30A	6	Si	A398k	IRM 5.0uA at 25.6VRM;31.5V(BR) max at IR 1.0mA;41.4V(CL) at Ipp 36A;Bidirectional
35	DTZ33A	6	Si	A398k	IRM 5.0uA at 28.2VRM;34.7V(BR) max at IR 1.0mA;45.7V(CL) at Ipp 33A;Bidirectional
36	DTZ36A	6	Si	A398k	IRM 5.0uA at 30.8VRM;37.8V(BR) max at IR 1.0mA;49.9V(CL) at Ipp 30A;Bidirectional
37	DTZ39A	6	Si	A398k	IRM 5.0uA at 33.3VRM;41V(BR) max at IR 1.0mA;53.9V(CL) at Ipp 28A;Bidirectional
38	DTZ43A	6	Si	A398k	IRM 5.0uA at 36.8VRM;45.2V(BR) max at IR 1.0mA;59.3V(CL) at Ipp 25.3A;Bidirectional
39	DTZ47A	6	Si	A398k	IRM 5.0uA at 40.2VRM;49.4V(BR) max at Ir 1.0mA;64.8V(CL) at Ipp 23.2A;Bidirectional
40	DTZ51A	6	Si	A398k	IRM 5.0uA at 43.6VRNM53.6V(BR) max at IR 1.0mA;70.1V(CL) at Ipp 21.4A;Bidirectional
41	DTZ56A	6	Si	A398k	IRM 5.0uA at 47.8VRM;58.8V(BR) max at IR 1.0mA;77V(CL) at Ipp 19.5A;Bidirectional
42	DTZ62A	6	Si	A398k	IRM 5.0uA at 53VRM;65.1V(BR) max at IR 1.0mA;85V(CL) at Ipp 17.7A;Bidirectional
43	DTZ68A	6	Si	A398k	IRM 5.0uA at 58.1VRM;71.4V(BR) max at IR 1.0mA;92V(CL) at Ipp 16.3A;Bidirectional
44	DTZ75A	6	Si	A398k	IRM 5.0uA at 64.1VRM;78.8V(BR) max at IR 1.0mA;103V(CL) at Ipp 14.6A;Bidirectional
45	DTZ82A	6	Si	A398k	IRM 5.0uA at 70.1VRM;86.1V(BR) max at IR 1.0mA;113V(CL) at Ipp 13.3A;Bidirectional
46	DTZ91A	6	Si	A398k	IRM 5.0uA at 77.8VRM;95.5V(BR) max at IR 1.0mA;125V(CL) at Ipp 12A;Bidirectional
47	DTZ100A	6	Si	A398k	IRM 5.0uA at 85.5VRM;105V(BR) max at Ir 1.0mA;137V(CL) at Ipp 11A;Bidirectional
48	DTZ110A	6	Si	A398k	IRM 5.0uA at 94VRM;116V(BR) max at IR 1.0mA;152V(CL) at Ipp 9.9A;bidirectional
49	DTZ120A	6	Si	A398k	IRM 5.0uA at 102VRM;126V(BR) max at IR 1.0mA;165V(CL) at Ipp 9.1A;Bidirectional
50	DTZ130A	6	Si	A398k	IRM 5.0uA at 111VRM;137V(BR) max at IR 1.0mA;179V(CL) at Ipp 8.4A;Bidirectional
51	DTZ150A	6	Si	A398k	IRM 5.0uA at 128VRM;158V(BR) max at IR 1.0mA;207V(CL) at Ipp 7.2A;Bidirectional
52	DTZ160A	6	Si	A398k	IRM 5.0uA at 138VRM;168V(BR) max at IR 1.0mA;219V(CL) at Ipp 6.8A;Bidirectional
53	DTZ170A	6	Si	A398k	IRM 5.0uA at 145VRM;179V(BR) max at IR 1.0mA;234V(CL) at Ipp 6.4A;Bidirectional
54	DTZ180A	6	Si	A398k	IRM 5.0uA at 154VRM;189V(BR) max at IR 1.0mA;246V(CL) at Ipp 6.1A;Bidirectional
55	DTZ200A	6	Si	A398k	IRM 5.0uA at 171VRM;210V(BR) max at IR 1.0mA;274V(CL) at Ipp 5.5A;Bidirectional
56	DTZ220A	6	Si	A398k	IRM 5.0uA at 185VRM;231V(BR) max at IR 1.0mA;328V(CL) at Ipp 4.6A;Bidirectional
57	ESDA5	6	Si	M1089 †	Transient Voltage Supressor; Stand off Volt 5.0V;Max Clamp Volt 6.7V at 1App
58	ESDA8	6	Si	M1089 †	Transient Voltage Supressor; Stand off Volt 8.0V;Max Clamp Volt 11.2V at 1App
59	ESDA10	6	Si	M1089 †	Transient Voltage Supressor; Stand off Volt 10V;Max Clamp Volt 13.8V at 1App
60	ESDA12	6	Si	M1089 †	Transient Voltage Supressor; Stand off Volt 12V;Max Clamp Volt 16.7V at 1App
61	ESDA15	6	Si	M1089 †	Transient Voltage Supressor; Stand off Volt 15V;Max Clamp Volt 21V at 1App
62	ESDA20	6	Si	M1089 †	Transient Voltage Supressor; Stand off Volt 20V;Max Clamp Volt 27V at 1App
63	ESDA25	6	Si	M1089 †	Transient Voltage Supressor; Stand off Volt 25V;Max Clamp Volt 34.5V at 1App
64	ESDA30	6	Si	M1089 †	Transient Voltage Supressor; Stand off Volt 30V;Max Clamp Volt 41.9V at 1App
65	ESDA50	6	Si	M1089 †	Transient Voltage Supressor; Stand off Volt 50V;Max Clamp Volt 70.9V at 1App
66	FP1009	6	Si Δ	A1aao	VRM 7.37V;VBR 8.19-10.00V at It1.0mA;IR 50.0uA;Vc 13.50V at IRSM 44.4A;BiDi
67	FP1009A	6	Si Δ	A1aao	VRM 7.78V;VBR 8.65-9.550V at It1.0mA;IR 50.0uA;Vc 12.90V at IRSM 46.5A;BiDi
68♦	FP1010	6	Si Δ	A1aao	VRM 8.10V;VBR 9.0-11.0V at It 1.0mA;IR 10uA;Vc 14.9V at IRSM 40.3A;BiDi
69	FP1010A	6	Si Δ	A1aao	VRM 8.55V;VBR 9.50-10.50V at It1.0mA;IR 10uA;Vc 14.2V at IRSM 42.3A;BiDi
70	FP1011	6	Si Δ	A1aao	VRM 8.92V;VBR 9.90-12.10V at It1.0mA;IR 5.0uA;Vc 16.3V at IRSM 36.8A;BiDi
71	FP1011A	6	Si Δ	A1aao	VRM 9.40V;VBR 10.50-11.60V at It1.0mA;IR 5.0uA;Vc 15.7V at IRSM 38.2A;BiDi
72	FP1012	6	Si Δ	A1aao	VRM 9.72V;VBR 10.8-13.20V at It 1.0mA;IR 5.0uA;Vc 17.80V at IRSM 33.7A;BiDi
73	FP1012A	6	Si Δ	A1aao	VRM 10.2V;VBR 11.4-12.6V at It1.0mA;IR 5.0uA;Vc 17.0V at IRSM 35.3A;BiDi
74	FP1013	6	Si Δ	A1aao	VRM 10.5V;VBR 11.7-14.3V at It1.0mA;IR 5.0uA;Vc 19.3V at IRSM 31.1A;BiDi
75	FP1013A	6	Si Δ	A1aao	VRM 11.10V;VBR 12.4-13.7V at It1.0mA;IR 5.0uA;Vc 18.5V at IRSM 32.4A;BiDi
76	FP1015	6	Si Δ	A1aao	VRM 12.10V;VBR 13.5-16.5V at It1.0mA;IR 5.0uA;Vc 22.3V at IRSM 26.9A;BiDi
77	FP1015A	6	Si Δ	A1aao	VRM 12.8V;VBR 14.3-15.8V at It1.0mA;IR 5.0uA;Vc 21.3V at IRSM 28.2A;BiDi
78	FP1016	6	Si Δ	A1aao	VRM 12.9V;VBR 14.4-17.6V at It1.0mA;IR 5.0uA;Vc 23.8V at IRSM 25.2A;BiDi
79	FP1016A	6	Si Δ	A1aao	VRM 13.6V;VBR 15.2-16.8V at It1.0mA;IR 5.0uA;Vc 22.7V at IRSM 26.4A;BiDi
80	FP1018	6	Si Δ	A1aao	VRM 14.50V;VBR 16.2-19.80V at It 1.0mA;IR 5.0uA;Vc 26.70V at IRSM 22.5A;BiDi
81	FP1018A	6	Si Δ	A1aao	VRM 15.3V;VBR 17.1-18.9V at It1.0mA;IR 5.0uA;Vc 25.5V at IRSM 23.5A;BiDi
82♦	FP1020	6	Si Δ	A1aao	VRM 16.2V;VBR 18.0-22.0V at It1.0mA;IR 5.0uA;Vc 29.7V at IRSM 20.2A;BiDi
83♦	FP1020A	6	Si Δ	A1aao	VRM 17.10V;VBR 19.0-21.0V at It1.0mA;IR 5.0uA;Vc 28.4V at IRSM 21.1A;BiDi
84♦	FP1022	6	Si Δ	A1aao	VRM 17.8V;VBR 19.8-24.2V at It1.0mA;IR 5.0uA;Vc 32.7V at IRSM 18.3A;BiDi
85♦	FP1022A	6	Si Δ	A1aao	VRM 18.8V;VBR 20.9-23.1V at It1.0mA;IR 5.0uA;Vc 31.2V at IRSM 19.2A;BiDi
86♦	FP1024	6	Si Δ	A1aao	VRM 19.4V;VBR 21.6-26.4V at It1.0mA;IR 5.0uA;Vc 35.6V at IRSM 16.9A;BiDi
87♦	FP1024A	6	Si Δ	A1aao	VRM 20.5V;VBR 22.8-25.2V at It1.0mA;IR 5.0uA;Vc 34.0V at IRSM 17.6A;BiDi
88♦	FP1027	6	Si Δ	A1aao	VRM21.80V;VBR 24.3-29.70V at It 100u A;IR 5.0uA;Vc 35.60V at IRSM 20.2 A;b;d;
89♦	FP1027A	6	Si Δ	A1aao	VRM 23.1V;VBR 25.7-28.4V at It 100uA;IR5.0uA;Vc 34.1V at IRSM 21.1A;BiDi
90♦	FP1030	6	Si Δ	A1aao	VRM 24.33V;VBR 27.0-33.0V at It 100uA;IR5.0uA;Vc 39.6V at IRSM 18.2A;BiDi
91♦	FP1030A	6	Si Δ	A1aao	VRM 25.6V;VBR 28.5-31.5V at It 100uA;IR5.0uA;Vc 38.0V at IRSM 19.0A;BiDi
92♦	FP1033	6	Si Δ	A1aao	VRM 26.8V;VBR 29.7-36.3V at It 100uA;IR5.0uA;Vc 43.5V at IRSM 16.5A;BiDi
93♦	FP1033A	6	Si Δ	A1aao	VRM 28.2V;VBR 31.4-34.7V at It 100uA;IR5.0uA;Vc 41.6V at IRSM 17.3A;BiDi
94♦	FP1036	6	Si Δ	A1aao	VRM29.10V;VBR 32.4-39.60V at It 100u A;IR 5.0uA;Vc 45.50V at IRSM 17.8 A;b;d;
95♦	FP1036A	6	Si Δ	A1aao	VRM 30.8V;VBR 34.2-37.8V at It 100uA;IR5.0uA;Vc 43.5V at IRSM 18.7A;BiDi
96♦	FP1039	6	Si Δ	A1aao	VRM 31.6V;VBR 35.1-42.9V at It 100uA;IR 5.0uA;Vc 49.3V at IRSM 16.5A;BiDi
97♦	FP1039A	6	Si Δ	A1aao	VRM 33.3V;VBR 37.1-41.0V at It 100uA;IR 5.0uA;Vc 47.2V at IRSM 17.2A;BiDi
98♦	FP1043	6	Si Δ	A1aao	VRM 34.8V;VBR 38.7-47.3V at It 100uA;IR 5.0uA;Vc 54.4V at IRSM 14.9A;BiDi
99♦	FP1043A	6	Si Δ	A1aao	VRM 36.8V;VBR 40.9-45.2V at It 100uA;IR 5.0uA;Vc 52.0V at IRSM 15.6A;BiDi
100♦	FP1047	6	Si Δ	A1aao	VRM 38.1V;VBR 42.3-51.7V at It 100uA;IR 5.0uA;Vc 58.2V at IRSM 15.5A;BiDi
101♦	FP1047A	6	Si Δ	A1aao	VRM 40.2V;VBR 44.7-49.4V at It 100uA;IR 5.0uA;Vc 55.6V at IRSM 16.2A;BiDi
102♦	FP1051	6	Si Δ	A1aao	VRM 41.3V;VBR 45.9-56.1V at It 100uA;IR 5.0uA;Vc 63.10V at IRSM 14.3A;BiDi
103♦	FP1051A	6	Si Δ	A1aao	VRM 43.6V;VBR 48.5-53.6V at It 100uA;IR 5.0uA;Vc 60.3V at IRSM 14.9A;BiDi
104♦	FP1056	6	Si Δ	A1aao	VRM45.50V;VBR 50.4-61.60V at It 100u A;IR 5.0uA;Vc 69.30V at IRSM 13.0 A;b;d;
105♦	FP1056A	6	Si Δ	A1aao	VRM 47.8V;VBR 53.2-58.8V at It 100uA;IR 5.0uA;Vc 66.2V at IRSM 13.6A;BiDi
106♦	FP1062	6	Si Δ	A1aao	VRM50.20V;VBR 55.8-68.60V at It 100u A;IR 5.0uA;Vc 76.0V at IRSM 11.7 A;B;D;
107♦	FP1062A	6	Si Δ	A1aao	VRM 53.0V;VBR 58.9-65.1V at It 100uA;IR 5.0uA;Vc 73.0V at IRSM 12.3A;BiDi
108♦	FP1068	6	Si Δ	A1aaq	VRM55.1V;VBR61.2-74.8V at It 100uA;IR5.0uA;Vc 84.0V at IRSM 10.7 A;B;D;
109♦	FP1068A	6	Si Δ	A1aao	VRM 58.1V;VBR 64.6-71.4V at It 100uA;IR 5.0uA;Vc 80.0V at IRSM 11.2A;BiDi
110♦	FP1075	6	Si Δ	A1aao	VRM 60.7V;VBR 67.5-82.5V at It 100uA;IR 5.0uA;Vc 92.0V at IRSM 9.7A;BiDi

SYMBOLS AND CODES EXPLAINED IN INTERPRETER

7. TRANSIENT SUPPRESSOR DIODES - Bipolar & Unipolar Types (Cont'd)

IN ORDER OF (1) TYPE (2) MAT AND (3) TYPE NO.

LINE No.	3 TYPE NUMBER	1 TYPE	2 MAT.	DWG. NO.	DESCRIPTION
1♦	FP1075A	6	Si Δ	A1aao	VRM 64.1V;VBR 71.3-78.8V at It 100uA;IR 5.0uA;Vc 88.0V at IRSM 10.2A;BiDi
2♦	FP1082	6	Si Δ	A1aao	VRM 66.4V;VBR 73.8-90.2V at It 100uA;IR 5.0uA;Vc 103.0V at IRSM 7.80A;BiDi
3♦	FP1082A	6	Si Δ	A1aao	VRM 70.1V;VBR 77.9-86.1V at It 100uA;IR 5.0uA;Vc 99.0V at IRSM 8.20A;BiDi
4♦	FP1091	6	Si Δ	A1aao	VRM 73.7V;VBR 81.9-100.0V at It 100uA;IR 5.0uA;Vc 115.0V at IRSM 8.5A;BiDi
5♦	FP1091A	6	Si Δ	A1aao	VRM 77.8V;VBR 86.5-95.5V at It 100uA;IR 5.0uA;Vc 109.0V at IRSM 8.9A;BiDi
6♦	FP1100	6	Si Δ	A1aao	VRM 81.0V;VBR 90.0-110.0V at It 100uA;IR5.0uA;Vc 123.0V at IRSM 7.8A;BiDi
7♦	FP1100A	6	Si Δ	A1aao	VRM 85.5V;VBR 95.0-105.8V at It 100uA;IR5.0uA;Vc 118.0V at IRSM 8.1A;BiDi
8♦	FP1110	6	Si Δ	A1aao	VRM 89.0V;VBR 99.0-121.0V at It 100uA;IR5.0uA;Vc 136.0V at IRSM 8.0A;BiDi
9♦	FP1110A	6	Si Δ	A1aao	VRM 94.0V;VBR 105.0-116.0V at It 100uA;IR5.0uA;Vc 130.0V at IRSM 8.3A;BiDi
10♦	FP1120	6	Si Δ	A1aaq	VRM97.0V;VBR108-132.0V at It 100uA;IR5.0uA;Vc148.0V at IRSM 7.3 A;B;D;
11♦	FP1120A	6	Si Δ	A1aao	VRM 102.0V;VBR 114.0-126.0V at It 100uA;IR 5.0uA;Vc 141.0V at IRSM 7.7A;BiDi
12♦	FP1130	6	Si Δ	A1aao	VRM 105.0V;VBR 117.0-143.0V at It 100uA;IR 5.0uA;Vc 160.0V at IRSM 6.8A;BiDi
13♦	FP1130A	6	Si Δ	A1aao	VRM 111.0V;VBR 124.0-137.0V at It 100uA;IR 5.0uA;Vc 154.0V at IRSM 7.10A;BiDi
14	FP1140	6	Si Δ	A1aao	VBR 154; IR Max 10u at VR 113v;Vclamp 84V; Temp Jmax 125°c
15♦	FP1150	6	Si Δ	A1aao	VRM 121.0V;VBR 135.0-165.0V at It 100uA;IR 5.0uA;V 185.0V at IRSM 5.90A;BiDi
16♦	FP1150A	6	Si Δ	A1aao	VRM 128.0V;VBR 143.0-158.0V at It 100uA;IR 5.0uA;V 177.0V at IRSM 6.10A;BiDi
17♦	FP1160	6	Si Δ	A1aao	VRM 130.0V;VBR 144.0-176.0V at It 100uA;IR 5.0uA;V 198.0V at IRSM 5.50A;BiDi
18♦	FP1160A	6	Si Δ	A1aao	VRM 136.0V;VBR 152.0-168.0V at It 100uA;IR 5.0uA;V 189.0V at IRSM 5.80A;BiDi
19♦	FP1170	6	Si Δ	A1aao	VRM 138.0V;VBR 153.0-187.0V at It 100uA;IR 5.0uA;V 210.0V at IRSM 5.20A;BiDi
20♦	FP1170A	6	Si Δ	A1aao	VRM 145.0V;VBR 162.0-179.0V at It 100uA;IR 5.0uA;V 201.0V at IRSM 5.40A;BiDi
21♦	FP1180	6	Si Δ	A1aaq	VRM146.0V;VBR162-198.0V at It 100uA;IR 5.0uA;Vc 222.0V at IRSM 4.90 A;B;D;
22♦	FP1180A	6	Si Δ	A1aao	VRM 154.0V;VBR 171.0-189.0V at It 100uA;IR 5.0uA;V 212.0V at IRSM 5.10A;BiDi
23♦	FP1200	6	Si Δ	A1aao	VRM 162.0V;VBR 180.0-220.0V at It 100uA;IR 5.0uA;V 247.0V at IRSM 4.4A;BiDi
24♦	FP1200A	6	Si Δ	A1aao	VRM 171.0V;VBR 190.0-210.0V at It 100uA;IR 5.0uA;V 236.0V at IRSM 4.6A;BiDi
25♦	FP1220	6	Si Δ	A1aaq	VRM175.0V;VBR198-242.0V at It 100uA;IR 5.0uA;Vc 272.0V at IRSM 4.90 A;B;D;
26♦	FP1220A	6	Si Δ	A1aao	VRM 185.0V;VBR 209.0-231.0V at It 100uA;IR 5.0uA;V 259.0V at IRSM 4.2A;BiDi
27♦	FP1250	6	Si Δ	A1aao	VRM 202.0V;VBR 225.0-275.0V at It 100uA;IR 5.0uA;V 309.0V at IRSM 3.5A;BiDi
28♦	FP1250A	6	Si Δ	A1aao	VRM 214.0V;VBR 237.0-263.0V at It 100uA;IR 5.0uA;V 295.0V at IRSM 3.7A;BiDi
29♦	FP1275	6	Si Δ	A1aaq	VRM223.0V;VBR247.5-302.5V At It 100uA;IR 5.0uA;Vc 340.0V At IRSM 3.20 A;B;D;
30♦	FP1275A	6	Si Δ	A1aao	VRM 235.0V;VBR 261.3-288.8V at It100uA;IR 5.0uA;Vc 324.0V at IRSM 3.30A;BiDi
31	FP2009	6	Si Δ	A1aap	VRM 7.37V;VBR 8.19-10.00V at It1.0mA;IR 50uA;Vc 13.0V at IRSM 115.4A;BiDi
32	FP2009A	6	Si Δ	A1aap	VRM 7.78V;VBR 8.65-9.55V at It1.0mA;IR 50uA;Vc 12.4V at IRSM 120.8A;BiDi
33	FP2010	6	Si Δ	A1aap	VRM 8.10V;VBR 9.00-11.00V at It1.0mA;IR 10uA;Vc 14.3V at IRSM 104.9A;BiDi
34♦	FP2010A	6	Si Δ	A1aap	VRM 8.55V;VBR 9.50-10.50V at It1.0mA;IR 10uA;Vc 13.7V at IRSM 109.9A;BiDi
35	FP2011	6	Si Δ	A1aap	VRM 8.92V;VBR 9.90-12.10V at It1.0mA;IR 5.0uA;Vc 15.7V at IRSM 95.4A;BiDi
36	FP2011A	6	Si Δ	A1aap	VRM 9.40V;VBR 10.50-11.60V at It1.0mA;IR 5.0uA;Vc 15.1V at IRSM 99.5A;BiDi
37	FP2012	6	Si Δ	A1aap	VRM 9.72V;VBR 10.8-13.20V at It 1.0mA;IR 5.0uA;Vc 17.20V at IRSM 87.4A;BiDi
38	FP2012A	6	Si Δ	A1aap	VRM 10.2V;VBR 11.40-12.60V at It1.0mA;IR 5.0uA;Vc 16.4V at IRSM 91.6A;BiDi
39	FP2013	6	Si Δ	A1aap	VRM 10.5V;VBR 11.70-14.30V at It1.0mA;IR 5.0uA;Vc 18.6V at IRSM 80.7A;BiDi
40	FP2013A	6	Si Δ	A1aap	VRM 11.10V;VBR 12.40-13.70V at It1.0mA;IR 5.0uA;Vc 17.8V at IRSM 84.2A;BiDi
41	FP2015	6	Si Δ	A1aap	VRM 12.1V;VBR 13.50-16.50V at It1.0mA;IR 5.0uA;Vc 21.5V at IRSM 69.9A;BiDi
42	FP2015A	6	Si Δ	A1aap	VRM 12.8V;VBR 14.30-15.80V at It1.0mA;IR 5.0uA;Vc 20.5V at IRSM 73.0A;BiDi
43	FP2016	6	Si Δ	A1aap	VRM 12.9V;VBR 14.4-17.6V at It1.0mA;IR 5.0uA;Vc22.9V at IRSM 65.6A;BiDi
44	FP2016A	6	Si Δ	A1aap	VRM 13.6V;VBR 15.2-16.8V at It1.0mA;IR 5.0uA;Vc 21.8V at IRSM 68.7A;BiDi
45	FP2018	6	Si Δ	A1aap	VRM 14.50V;VBR 16.2-19.80V at It 1.0mA;IR 5.0uA;Vc 25.70V at IRSM 58.3A;BiDi
46	FP2018A	6	Si Δ	A1aap	VRM 15.3V;VBR 17.1-18.9V at It1.0mA;IR 5.0uA;Vc 24.6V at IRSM 61.0A;BiDi
47	FP2020	6	Si Δ	A1aap	VRM 16.2V;VBR 18.0-22.0V at It1.0mA;IR 5.0uA;Vc 28.6V at IRSM 52.4A;BiDi
48	FP2020A	6	Si Δ	A1aap	VRM 17.1V;VBR 19.0-21.0V at It1.0mA;IR 5.0uA;Vc 27.3V at IRSM 54.9A;BiDi
49	FP2022	6	Si Δ	A1aap	VRM 17.8V;VBR 19.8-24.2V at It1.0mA;IR 5.0uA;Vc 31.5V at IRSM 47.7A;BiDi
50	FP2022A	6	Si Δ	A1aap	VRM 18.8V;VBR 20.9-23.1V at It1.0mA;IR 5.0uA;Vc 30.0V at IRSM 50.0A;BiDi
51	FP2024	6	Si Δ	A1aap	VRM 19.4V;VBR 21.6-26.4V at It1.0mA;IR 5.0uA;Vc 34.0V at IRSM 43.7A;BiDi
52	FP2024A	6	Si Δ	A1aap	VRM 20.5V;VBR 22.8-25.2V at It1.0mA;IR 5.0uA;Vc 32.8V at IRSM 45.8A;BiDi
53	FP2027	6	Si Δ	A1aap	VRM 21.80V;VBR 24.3-29.70V at It 0.1mA;IR 5.0uA;Vc 35.60V at IRSM 50.5A;BiDi
54	FP2027A	6	Si Δ	A1aap	VRM 23.1V;VBR 25.7-28.4V at It0.1mA;IR 5.0uA;Vc 34.1V at IRSM 52.8A;BiDi
55♦	FP2030	6	Si Δ	A1aap	VRM 24.33V;VBA 27.0-33.0V at It0.1mA;Ir 5.0uA;Vc 39.6V at IRSM 45.5A;BiDi
56	FP2030A	6	Si Δ	A1aap	VRM 25.6V;VBR 28.5-31.5V at It0.1mA;IR 5.0uA;Vc 38.0V at IRSM 47.6A;BiDi
57	FP2033	6	Si Δ	A1aap	VRM 26.8V;VBR 29.7-36.3V at It 100uA;IR 5.0uA;Vc 43.5V at IRSM 41.3A;BiDi
58	FP2033A	6	Si Δ	A1aap	VRM 28.2V;VBR 31.4-34.7V at It 100uA;IR 5.0uA;Vc 41.6V at IRSM 43.2A;BiDi
59	FP2036	6	Si Δ	A1aap	VRM 29.10V;VBR 32.4-39.60V at It 0.1mA;IR 5.0uA;Vc 45.5V at IRSM 44.5A;BiDi
60	FP2036A	6	Si Δ	A1aap	VRM 30.8V;VBR 34.2-37.8V at It 100uA;IR 5.0uA;Vc 43.5V at IRSM 46.7A;BiDi
61	FP2039	6	Si Δ	A1aap	VRM 31.6V;VBR 35.1-42.9V at It 100uA;IR 5.0uA;Vc 49.3V at IRSM 41.1A;BiDi
62	FP2039A	6	Si Δ	A1aap	VRM 33.3V;VBR 37.1-41.0V at It 100uA;IR 5.0uA;Vc 47.1V at IRSM 43.0A;BiDi
63	FP2043	6	Si Δ	A1aap	VRM 34.8V;VBR 38.7-47.3V at It 100uA;IR 5.0uA;Vc 54.4V at IRSM 37.3A;BiDi
64	FP2043A	6	Si Δ	A1aap	VRM 36.8V;VBR 40.9-45.2V at It 100uA;IR 5.0uA;Vc 52.0V at IRSM 39.0A;BiDi
65♦	FP2047	6	Si Δ	A1aap	VRM 38.1V;VBR 42.3-51.7V at It100uA;IR 5.0uA;Vc 58.2V at IRSM 38.7A;BiDi
66♦	FP2047A	6	Si Δ	A1aap	VRM 40.2V;VBR 44.7-49.4V at It100uA;IR 5.0uA;Vc 55.6V at IRSM 40.5A;BiDi
67♦	FP2051	6	Si Δ	A1aap	VRM 41.3V;VBR 45.9-56.1V at It100uA;IR 5.0uA;Vc 63.1V at IRSM 35.7A;BiDi
68♦	FP2051A	6	Si Δ	A1aap	VRM 43.6V;VBR 48.5-53.6V at It100uA;IR 5.0uA;Vc 60.3V at IRSM 37.3A;BiDi
69♦	FP2056	6	Si Δ	A1aap	VRM45.5V;VBR 50.4-61.60V at It 100uA;IR 5.0uA;Vc 69.30 Vat IRSM 32.5 A;B;D;
70♦	FP2056A	6	Si Δ	A1aap	VRM 47.8V;VBR 53.2-58.8V at It100uA;IR 5.0uA;Vc 666.2 at IRSM 34.0A;BiDi
71♦	FP2062	6	Si Δ	A1aap	VRM50.2V;VBR 55.8-68.20V at It 100uA;IR 5.0uA;Vc 76.0V at IRSM 29.3 A;B;D;
72♦	FP2062A	6	Si Δ	A1aap	VRM 53.0V;VBR 58.9-65.10V at It100uA;Ir 5.0uA;Vc 73.0V at IRSM 30.7A;BiDi
73♦	FP2068	6	Si Δ	A1aap	VRM55.1V;VBR 61.2-74.80V at It 100uA;IR 5.0uA;Vc 84.0V at IRSM 26.7 A;B;D;
74♦	FP2068A	6	Si Δ	A1aap	VRM 58.1V;VBR 64.6-71.4V at It100uA;Ir 5.0uA;Vc 80.0V at IRSM 28.0A;BiDi
75♦	FP2075	6	Si Δ	A1aap	VRM 60.7V;VBR 67.5-82.5V at It100uA;Ir 5.0uA;Vc 92.0V at IRSM 24.2A;BiDi
76♦	FP2075A	6	Si Δ	A1aap	VRM 64.1V;VBR 71.3-78.8V at It100uA;Ir 5.0uA;Vc 88.0V at IRSM 25.4A;BiDi
77♦	FP2082	6	Si Δ	A1aap	VRM 66.4V;VBR 73.8-90.2V at It100uA;Ir 5.0uA;Vc 103.0V at IRSM 19.6A;BiDi
78♦	FP2082A	6	Si Δ	A1aap	VRM 70.1V;VBR 77.9-86.1V at It100uA;Ir 5.0uA;Vc 99.0V at IRSM 20.5A;BiDi
79♦	FP2091	6	Si Δ	A1aap	VRM 73.7V;VBR 81.9-100.0V at It100uA;IR 5.0uA;Vc 115.0V at IRSM 21.2A;BiDi
80♦	FP2091A	6	Si Δ	A1aap	VRM 77.8V;VBR 86.5-95.5V at It100uA;IR 5.0uA;Vc 109.0V at IRSM 22.2A;BiDi
81♦	FP2100	6	Si Δ	A1aap	VRM 81.0V;VBR 90.0-110.0V at It100uA;IR 5.0uA;Vc 123.0V at IRSM 19.3A;BiDi
82♦	FP2100A	6	Si Δ	A1aap	VRM 85.5V;VBR 95.0-105.0V at It100uA;IR 5.0uA;Vc 118.0V at IRSM 20.2A;BiDi
83♦	FP2110	6	Si Δ	A1aap	VRM 89.0V;VBR 99.0-121.0V at It100uA;IR 5.0uA;Vc 136.0V at IRSM 19.8A;BiDi
84♦	FP2110A	6	Si Δ	A1aap	VRM 94.0V;VBR 105.0-116.0V at It100uA;IR 5.0uA;Vc 130.0V at IRSM 20.7A;BiDi
85♦	FP2120	6	Si Δ	Alaap	VRM 97.0V; VBR 108-132.0V at It 100uA;IR 5.0uA;Vc 148.0 V at IRSM 18.2 A;BiDi
86♦	FP2120A	6	Si Δ	A1aap	VRM 102.0V;VBR 114.0-126.0V at It100uA;IR 5.0uA;Vc 141.0V at IRSM 19.0A;BiDi
87♦	FP2130	6	Si Δ	A1aap	VRM 105.0V;VBR 117.0-143.0V at It100uA;IR 5.0uA;Vc 160.0V at IRSM 16.8A;BiDi
88♦	FP2130A	6	Si Δ	A1aap	VRM 111.0V;VBR 124.0-137.0V at It100uA;IR 5.0uA;Vc 154.0V at IRSM 17.5A;BiDi
89	FP2140	6	Si Δ	A1aap	VBR 154; IR Max 10u at VR 113V; Temp Jmax 125°C; Cap Max 400pF
90♦	FP2150	6	Si Δ	A1aap	VRM 121.0V;VBR 135.0-165.0V at It100uA;IR 5.0uA;Vc 185.0V at IRSM 14.5A;BiDi
91♦	FP2150A	6	Si Δ	A1aap	VRM 128.0V;VBR 143.0-158.0V at It100uA;IR 5.0uA;Vc 177.0V at IRSM 15.2A;BiDi
92♦	FP2160	6	Si Δ	A1aap	VRM 130.0V;VBR 144.0-176.0V at It100uA;IR 5.0uA;Vc 198.0V at IRSM 13.6A;BiDi
93♦	FP2160A	6	Si Δ	A1aap	VRM 136.0V;VBR 152.0-168.0V at It100uA;IR 5.0uA;Vc 189.0V at IRSM 14.3A;BiDi
94♦	FP2170	6	Si Δ	A1aap	VRM 138.0V;VBR 153.0-187.0V at It100uA;IR 5.0uA;Vc 210.0V at IRSM 12.8A;BiDi
95♦	FP2170A	6	Si Δ	A1aap	VRM 145.0V;VBR 162.0-179.0V at It100uA;IR 5.0uA;Vc 201.0V at IRSM 13.4A;BiDi
96♦	FP2180	6	Si Δ	A1aap	VRM 146.0V;VBR 162-198.0V at It 100uA;IR 5.0uA;Vc 222.0 V at IRSM 12.1 A;BiDi
97♦	FP2180A	6	Si Δ	A1aap	VRM 154.0V;VBR 171.0-189.0V at It100uA;IR 5.0uA;Vc 212.0V at IRSM 12.7A;BiDi
98♦	FP2200	6	Si Δ	A1aap	VRM 162.0V;VBR 180.0-220.0V at It100uA;IR 5.0uA;Vc 247.0V at IRSM 10.9A;BiDi
99♦	FP2200A	6	Si Δ	A1aap	VRM 171.0V;VBR 190.0-210.0V at It100uA;IR 5.0uA;Vc 236.0V at IRSM 11.4A;BiDi
100♦	FP2220	6	Si Δ	A1aap	VRM 175.0V;VBR 198-242.0V at It 100uA;IR 5.0uA;Vc 272.0 V at IRSM 9.90 A;BiDi
101♦	FP2220A	6	Si Δ	A1aap	VRM 185.0V;VBR 209.0-231.0V at It100uA;IR 5.0uA;Vc 259.0V at IRSM 10.4A;BiDi
102♦	FP2250	6	Si Δ	A1aap	VRM 202.0V;VBR 225.0-275.0V at It100uA;IR 5.0uA;Vc 309.0V at IRSM 8.7A;BiDi
103♦	FP2250A	6	Si Δ	A1aap	VRM 214.0V;VBR 237.0-263.0V at It100uA;IR 5.0uA;Vc 295.0V at IRSM 9.10A;BiDi
104♦	FP2275	6	Si Δ	A1aap	VRM 223.0V;VBR 247.5-302.5V at It 100uA;IR 5.0uA;Vc 340.0V at IRSM 7.90AIBIDI
105♦	FP2275A	6	Si Δ	A1aap	VRM 235.0V;VBR 261.3-288.8V at It100uA;IR 5.0uA;Vc 324.0V at IRSM 8.3A;BiDi
106♦	FP3009	6	Si Δ	A1aaq	VRM 7.37V;VBR 8.19-10.0V at It100uA;IR 100uA;Vc 13.5V at IRSM 259A;BiDi
107	FP3009A	6	Si Δ	A1aaq	VRM 7.78V;VBR 8.65-9.55V at It 1.0mA;IR 100uA;Vc 12.9V at IRSM 271A;BiDi
108	FP3010	6	Si Δ	A1aaq	VRM 8.10V;VBR 9.0-11.0V at It 1.0mA;IR 20uA;Vc 14.9V at IRSM 235A;BiDi
109	FP3010A	6	Si Δ	A1aaq	VRM 8.55V;VBR 9.5-10.5V at It 1.0mA;IR 20uA;Vc 14.2V at IRSM 246A;BiDi
110	FP3011	6	Si Δ	A1aaq	VRM 8.92V;VBR 9.9-12.1V at It 1.0mA;IR 10uA;Vc 16.3V at IRSM 215A;BiDi

IN ORDER OF (1) TYPE (2) MAT AND (3) TYPE NO.

LINE No.	3 TYPE NUMBER	1 TYPE	2 MAT.	DWG. NO.	DESCRIPTION
1	FP3011A	6	Si Δ	A1aaq	VRM 9.40V;VBR 10.5-11.6V at It 1.0mA;IR 10uA;Vc 15.7V at IRSM 223A;BiDi
2	FP3012	6	Si Δ	A1aaq	VRM 9.72V;VBR 10.8-13.20V at It 1.0mA;IR 10.0uA;Vc 17.80V at IRSM 197.0A;BiDi
3♦	FP3012A	6	Si Δ	A1aaq	VRM10.2V;VBR 11.4-12.6V at It1.0mA;IR 10uA;Vc 17.0V at IRSM 206A;BiDi
4	FP3013	6	Si Δ	A1aaq	VRM 10.5V;VBR 11.7-14.3V at It 1.0mA;IR 10uA;Vc 19.8V at IRSM 181.0A;BiDi
5	FP3013A	6	Si Δ	A1aaq	VRM 11.10V;VBR 12.4-13.7V at It 1.0mA;IR 10uA;Vc 18.5V at IRSM 189.0A;BiDi
6	FP3015	6	Si Δ	A1aaq	VRM 12.1V;VBR 13.5-16.5V at It 1.0mA;IR 10uA;Vc 22.3V at IRSM 157.0A;BiDi
7	FP3015A	6	Si Δ	A1aaq	VRM 12.8V;VBR 14.3-15.8V at It 1.0mA;IR 10uA;Vc 21.3V at IRSM 164.0A;BiDi
8	FP3016	6	Si Δ	A1aaq	VRM 12.9V;VBR 14.4-17.6V at It 1.0mA;IR 10uA;Vc 23.8V at IRSM 147.0A;BiDi
9	FP3016A	6	Si Δ	A1aaq	VRM 13.6V;VBR 15.2-16.8V at It 1.0mA;IR 10uA;Vc 22.7V at IRSM 154.0A;BiDi
10	FP3018	6	Si Δ	A1aaq	VRM 14.50V;VBR 16.2-19.80V at It 1.0mA;IR 10.0uA;Vc 28.70V at IRSM 131.0A;BiDi
11	FP3018A	6	Si Δ	A1aaq	VRM 15.3V;VBR 17.1-18.9V at It 1.0mA;IR 10uA;Vc 25.5V at IRSM 137.0A;BiDi
12	FP3020	6	Si Δ	A1aaq	VRM 16.2V;VBR 18.0-22.0V at It 1.0mA;IR 10uA;Vc 29.7V at IRSM 118.0A;BiDi
13	FP3020A	6	Si Δ	A1aaq	VRM 17.1V;VBR 19.0-21.0V at It 1.0mA;IR 10uA;Vc 28.4V at IRSM 123.0A;BiDi
14	FP3022	6	Si Δ	A1aaq	VRM 17.8V;VBR 19.8-24.2V at It 1.0mA;IR 10uA;Vc 32.7V at IRSM 107.0A;BiDi
15	FP3022A	6	Si Δ	A1aaq	VRM 18.8V;VBR 20.9-23.1V at It 1.0mA;IR 10uA;Vc 31.2V at IRSM 112.0A;BiDi
16	FP3024	6	Si Δ	A1aaq	VRM 19.4V;VBR 21.6-26.4V at It 1.0mA;IR 10uA;Vc 35.6V at IRSM 98.0A;BiDi
17	FP3024A	6	Si Δ	A1aaq	VRM 20.5V;VBR 22.8-25.2V at It 1.0mA;IR 10uA;Vc 34.0V at IRSM 103.0A;BiDi
18	FP3027	6	Si Δ	A1aaq	VRM 21.80V;VBR 24.3-29.70V at It 0.1mA;IR 10.0uA;Vc 35.60V at IRSM 118.0A;BiDi
19	FP3027A	6	Si Δ	A1aaq	VRM 23.1V;VBR 25.7-28.4V at It 100uA;IR 10uA;Vc 34.1V at IRSM 123.0A;BiDi
20	FP3030	6	Si Δ	A1aaq	VRM 24.33v;VBR 27.0-33.0V at It 100uA;IR 10uA;Vc 39.6V at IRSM 106.0A;BiDi
21	FP3030A	6	Si Δ	A1aaq	VRM 25.6v;VBR 28.5-31.5V at It 100uA;IR 10uA;Vc 38.0V at IRSM 111.0A;BiDi
22	FP3033	6	Si Δ	A1aaq	VRM 26.8v;VBR 29.7-36.3V at It 100uA;IR 10uA;Vc 43.5V at IRSM 96.0A;BiDi
23	FP3033A	6	Si Δ	A1aaq	VRM 28.2V;VBR 31.4-34.7V at It 100uA;IR 10uA;Vc 41.6V at IRSM 101.0A;BiDi
24	FP3036	6	Si Δ	A1aaq	VRM 29.10V;VBR 32.4-39.60V at It 0.1mA;IR 10.0uA;Vc 45.50V at IRSM 104.0A;BiDi
25	FP3036A	6	Si Δ	A1aaq	VRM 30.8V;VBR 34.2-37.8V at It 100uA;IR 10uA;Vc 43.5V at IRSM 109.0A;BiDi
26	FP3039	6	Si Δ	A1aaq	VRM 31.6V;VBR 35.1-42.9V at It 100uA;IR 10uA;Vc 49.3V at IRSM 96.0A;BiDi
27	FP3039A	6	Si Δ	A1aaq	VRM 33.3V;VBR 37.1-41.0V at It 100uA;IR 10uA;Vc 47.2V at IRSM 100.0A;BiDi
28	FP3043	6	Si Δ	A1aaq	VRM 34.8V;VBR 38.7-47.3V at It 100uA;IR 10uA;Vc 54.4V at IRSM 87.0A;BiDi
29	FP3043A	6	Si Δ	A1aaq	VRM 36.8V;VBR 40.9-45.2V at It 100uA;IR 10uA;Vc 52.0V at IRSM 91.0A;BiDi
30♦	FP3047	6	Si Δ	A1aaq	VRM 38.1V;VBR 42.3-51.7V at It100uA;IR 10uA;Vc 58.2V at IRSM 90.0A;BiDi
31♦	FP3047A	6	Si Δ	A1aaq	VRM 40.2V;VBR 44.7-79.4V at It100uA;IR 10uA;Vc 55.6V at IRSM 94.0A;BiDi
32♦	FP3051	6	Si Δ	A1aaq	VRM 41.3V;VBR 45.9-56.1V at It100uA;IR 10uA;Vc 63.1V at IRSM 83.0A;BiDi
33♦	FP3051A	6	Si Δ	A1aaq	VRM 43.6;VBR 48.5-53.6V at It100uA;IR 10uA;Vc 60.3V at IRSM 87.0A;BiDi
34♦	FP3056	6	Si Δ	A1aaq	VRM 45.50V;VBR 50.4-61.60V at It 100uA;IR 10.0uA;Vc 69.30V at IRSM 76.0 AIBIDI
35♦	FP3056A	6	Si Δ	A1aaq	VRM 47.8;VBR 53.2-58.8V at It100uA;IR 10uA;Vc 66.2V at IRSM 79.0A;BiDi
36♦	FP3062	6	Si Δ	A1aaq	VRM 50.20V;VBR 55.8-68.20V at It 100uA;IR 10.0uA;Vc 76.0V at IRSM 69.0 AIBID I
37♦	FP3062A	6	Si Δ	A1aaq	VRM 53.0;VBR 58.9-65.1V at It100uA;IR 10uA;Vc 73.0V at IRSM 71.8A;BiDi
38♦	FP3068	6	Si Δ	A1aaq	VRM 55.1V;VBR 61.2-74.80V at It 100uA;IR 10.0uA;Vc 84.0V at IRSM 62.5 AIBID I
39♦	FP3068A	6	Si Δ	A1aaq	VRM 58.1;VBR 64.6-71.4V at It100uA;IR 10uA;Vc 80.0V at IRSM 65.6A;BiDi
40♦	FP3075	6	Si Δ	A1aaq	VRM 60.7;VBR 67.5-82.5V at It100uA;IR 10uA;Vc 92.0V at IRSM 57.1A;BiDi
41♦	FP3075A	6	Si Δ	A1aaq	VRM 64.1;VBR 71.3-78.8V at It100uA;IR 10uA;Vc 88.0V at IRSM 59.6A;BiDi
42♦	FP3082	6	Si Δ	A1aaq	VRM 66.4;VBR 73.8-90.2V at It100uA;IR 10uA;Vc 103.0V at IRSM 46.0A;BiDi
43♦	FP3082A	6	Si Δ	A1aaq	VRM 70.1V;VBR 77.9-86.1V at It100uA;IR 10uA;Vc 99.0V at IRSM 47.8A;BiDi
44♦	FP3091	6	Si Δ	A1aaq	VRM 73.7V;VBR 81.9-100.0V at It100uA;IR 10uA;Vc 115.0V at IRSM 63.5A;BiDi
45♦	FP3091A	6	Si Δ	A1aaq	VRM 77.8V;VBR 86.5-95.5V at It100uA;IR 10uA;Vc 109.0V at IRSM 67.0A;BiDi
46♦	FP3100	6	Si Δ	A1aaq	VRM 81.0V;VBR 90.0-110.0V at It100uA;IR 10uA;Vc 123.0V at IRSM 58.1A;BiDi
47♦	FP3100A	6	Si Δ	A1aaq	VRM 85.5V;VBR 95.0-105.0V at It100uA;IR 10uA;Vc 118.0V at IRSM 60.5A;BiDi
48♦	FP3110	6	Si Δ	A1aaq	VRM 89.0V;VBR 99.0-121.0V at It100uA;IR 10uA;Vc 136.0V at IRSM 59.5A;BiDi
49♦	FP3110A	6	Si Δ	A1aaq	VRM 94.0V;VBR 105.0-116.0V at It100uA;IR 10uA;Vc 130.0V at IRSM 62.3A;BiDi
50♦	FP3120	6	Si Δ	A1aaq	VRM 97.0V;VBR 108-132.0V at It 100uA;IR 10uA;Vc 148.0V at IRSM 54.6 AiBiDi I
51♦	FP3120A	6	Si Δ	A1aaq	VRM 102.0V;VBR 114.0-126.0V at It100uA;IR 10uA;Vc 141.0V at IRSM 57.4A;BiDi
52♦	FP3130	6	Si Δ	A1aaq	VRM 105.0V;VBR 117.0-143.0V at It100uA;IR 10uA;Vc 160.0V at IRSM 50.6A;BiDi
53♦	FP3130A	6	Si Δ	A1aaq	VRM 111.0V;VBR 124.0-137.0V at It100uA;IR 10uA;Vc 154.0V at IRSM 52.6A;BiDi
54	FP3140	6	Si Δ	A1aaq	VBR 154;IR Max. 10u at VR 113V;Temp Jmax 125°C
55♦	FP3150	6	Si Δ	A1aaq	VRM 121.0V;VBR 135.0-165.0V at It100uA;IR 10uA;Vc 185.0V at IRSM 43.7A;BiDi
56♦	FP3150A	6	Si Δ	A1aaq	VRM 128.0V;VBR 143.0-158.0V at It100uA;IR 10uA;Vc 177.0V at IRSM 45.8A;BiDi
57♦	FP3160	6	Si Δ	A1aaq	VRM 130.0V;VBR 144.0-176.0V at It100uA;IR 10uA;Vc 198.0V at IRSM 40.9A;BiDi
58♦	FP3160A	6	Si Δ	A1aaq	VRM 136.0V;VBR 152.0-168.0V at It100uA;IR 10uA;Vc 189.0V at IRSM 42.9A;BiDi
59♦	FP3170	6	Si Δ	A1aaq	VRM 138.0V;VBR 153.0-187.0V at It100uA;IR 10uA;Vc 210.0V at IRSM 38.5A;BiDi
60♦	FP3170A	6	Si Δ	A1aaq	VRM 145.0V;VBR 162.0-179.0V at It100uA;IR 10uA;Vc 201.0V at IRSM 40.2A;BiDi
61♦	FP3180	6	Si Δ	A1aaq	VRM 146.0V;VBR162-198.0 Vat It 100u4;IR 10.0uA;Vc 222 Vat IRSM 36.5 AiBiDi
62♦	FP3180A	6	Si Δ	A1aaq	VRM 154.0V;VBR 171.0-189.0V at It100A;IR 10uA;Vc 212.0V at IRSM 38.2A;BiDi
63♦	FP3200	6	Si Δ	A1aaq	VRM 162.0V;VBR 180.0-220.0V at It100A;IR 10uA;Vc 247.0V at IRSM 32.7A;BiDi
64♦	FP3200A	6	Si Δ	A1aaq	VRM 171.0V;VBR 190.0-210.0V at It100A;IR 10uA;Vc 263.0V at IRSM 34.3A;BiDi
65♦	FP3220	6	Si Δ	A1aaq	VRM 175.0V;VBR198-242.0 Vat It 100u4;IR 10.0uA;Vc 272.0Vat IRSM 29.8 AiBiDi
66♦	FP3220A	6	Si Δ	A1aaq	VRM 185.0V;VBR 209.0-231.0V at It100A;IR 10uA;Vc 259.0V at IRSM 31.3A;BiDi
67♦	FP3250	6	Si Δ	A1aaq	VRM 202.0V;VBR 225.0-275.0V at It100A;IR 10uA;Vc 309.0V at IRSM 26.2A;BiDi
68♦	FP3250A	6	Si Δ	A1aaq	VRM 214.0V;VBR 237.0-263.0V at It100A;IR 10uA;Vc 295.0V at IRSM 27.4A;BiDi
69♦	FP3275	6	Si Δ	A1aaq	VRM 223.0V;VBR247.5-302.50V at It 100uA;IR10.0uA;Vr 340.0V at IRSM 23.8AiBiDi
70♦	FP3275A	6	Si Δ	A1aaq	VRM 235.0V;VBR 261.3-288.8V at It100A;IR 10uA;Vc 324.0V at IRSM 24.9A;BiDi
71	FSY07	6	Si	DO35	Io ±150mA;Surge current ±1A at 100usi VF 550-680mv at IF 50ua;VF 650-810mv at IF 2ma
72	GHV2	6	Si	A69h	VR .8V;VB 1.33V at 10mA;IR 10uA max;CT 517pf max;TC 4mV/°C;Pd 1W at 50°C
73	GHV3	6	Si	A69h	VR 1.2V;VB 2V at 10mA;IR 10uA max;CT 319pf max;TC 6mV/°C;Pd 1W at 50°C
74	GHV4	6	Si	A69h	VR 1.6V;VB 2.7V at 10mA;IR 10uA max;CT 259pf max;TC 8mV/°C;Pd 1W at 50°C
75	GHV5	6	Si	A69h	VR 2V;VB 3.3V at 10mA;IR 10uA max;CT 191pf max;TC 10mV/°C;Pd 1W at 50°C
76	GHV6	6	Si	A69h	VR 2.4V;VB 4V at 10mA;IR 10uA max;CT 159pf max;TC 12mV/°C;Pd 1W at 50°C
77	GHV7	6	Si	A69h	VR 2.8V;VB 4.7V at 10mA;IR 10uA max;CT 140pf max;TC 14mV/°C;Pd 1W at 50°C
78	GHV8	6	Si	A69h	VR 3.2V;VB 5.4V at 10mA;IR 10uA max;CT 130pf max;TC 16mV/°C;Pd 1W at 50°C
79	GLT12	6	Si	DO4	BV 16.5V max;Vc Volt/Ipp 21.9V/114A max
80	GLT24	6	Si	DO4	BV 33V max;Vc Volt/Ipp 43.8V/57A max
81	GLT47	6	Si	DO4	BV 66V max;Vc Volt/Ipp 81.9V/30.5A max
82	GLT120	6	Si	DO4	BV 165V max;Vc Volt/Ipp 219V/11A max
83	ICT5	6	Si	DO13	VR 5V;VB 6V min at 1mA;IR 300uA max;Vf 3.5V max at 100A;IPP 160A max
84	ICT8	6	Si	DO13▼	VR 8V;VB 9.4V min at 1mA;IR 25uA max;Vf 3.5V max at 100A;IPP 100A max
85	ICT8C	6	Si	DO13	VC 11.4V max at Ipp 1.0A;VR 8.0V;BV 9.4V min at 1.0mA;IR 25uA max;Temp 175°C max Oper
86	ICT10	6	Si	DO13▼	VR 10V;VB 11.7V min at 1mA;IR 2uA max;Vf 3.5V max at 100A;IPP 90A max
87	ICT10C	6	Si	DO13	VC 14.1V max at Ipp 1.0A;VR 10V;BV11.7V min at 1.0mA;IR 2.0uA max Temp 175°C max Oper
88	ICT12	6	Si	DO13▼	VR 12V;VB 14.1V min at 1mA;IR 2uA max;Vf 3.5V max at 100A;IPP 70A max
89	ICT12C	6	Si	DO13	VC 16.7V max at Ipp 1.0A;VR 12V;BV 14.1V min at 1.0mA;IR 2.0uA max Temp 175°C max Oper
90	ICT15	6	Si	DO13▼	VR 15V;VB 17.6V min at 1mA;IR 2uA max;Vf 3.5V max at 100A;IPP 60A max
91	ICT15C	6	Si	DO13	VC 20.8V max at Ipp 1.0A;VR 15V;BV 17.6V min at 1.0mA;IR 2.0uA max Temp 175°C max Oper
92	ICT18	6	Si	DO13▼	VR 18V;VB 21.2V min at 1mA;IR 2uA max;Vf 3.5V max at 100A;IPP 50A max
93	ICT18C	6	Si	DO13	VC 24.8V max at Ipp 1.0A;VR 18V;BV 21.2V min at 1.0mA;IR 2.0uA max; Temp 175°C max Oper
94	ICT22	6	Si	DO13▼	VR 22V;VB 25.9V min at 1mA;IR 2uA max;Vf 3.5V max at 100A;IPP 40A max
95	ICT22C	6	Si	DO13	VC 30.8V max at Ipp 1.0A;VR 22V;BV 25.9V min at 1.0mA;IR 2.0uA max;Temp 175°C max Oper
96	ICT36	6	Si	DO13▼	VR 36V;VB 42.4V min at 1mA;IR 2uA max;Vf 3.5V max at 100A;IPP 23A max
97	ICT36C	6	Si	DO13	VC 50.6V max at Ipp 1.0A;VR 36V;BV 42.4V min at 1.0mA;IR 2.0uA max;Temp 175°C max Oper
98	ICT45	6	Si	DO13▼	VR 45V;VB 52.9V min at 1mA;IR 2uA max;Vf 3.5V max at 100A;IPP 19A max
99	ICT45C	6	Si	DO13	VC 63.3V max at Ipp 1.0A;VR 45V;BV 52.9V min at 1.0mA;IR 2.0uA max Temp 175°C max Oper
100	ICTE5	6	Si	A298ar	IR 300uA at 5.0VRWM;6.0V(BR) max at IR 1.0mA;9.4V(CL) at Ipp 160A
101	ICTE5C	6	Si	A298ar	IR 300uA at 5.0VRWM;6.0V(BR) min at IR 1.0mA;9.4V(CL) at Ipp 160A
102	ICTE8	6	Si	A298ar	IR 25uA at 8.0VRWM;9.4V(BR) min at IR 1.0mA;15.0V(CL) at Ipp 100A
103	ICTE8C	6	Si	A298ar	IR 25uA at 8.0VRWM;9.4V(BR) min at IR 1.0mA;15.0V(CL) at Ipp 100A
104	ICTE10	6	Si	A298ar	IR 2.0uA at 10VRWM;11.7V(BR) min at IR 1.0mA;16.7V(CL) at Ipp 90A
105	ICTE10C	6	Si	A298ar	IR 2.0uA at 10VRWM;11.7V(BR) min at IR 1.0mA;16.7V(CL) at Ipp 90A
106	ICTE12	6	Si	A298ar	IR 2.0uA at 12VRWM;14.1V(BR) min at IR 1.0mA;21.2V(CL) at Ipp 70A
107	ICTE12C	6	Si	A298ar	IR 2.0uA at 12VRWM;14.1V(BR) min at IR 1.0mA;21.2V(CL) at Ipp 70A
108	ICTE15	6	Si	A298ar	IR 2.0uA at 15VRWM;17.6V(BR) min at IR 1.0mA;25.0V(CL) at Ipp 60A
109	ICTE15C	6	Si	A298ar	IR 2.0uA at 15VRWM;17.6V(BR) min at IR 1.0mA;25.0V(CL) at Ipp 60A
110	ICTE18	6	Si	A298ar	IR 2.0uA at 18VRWM;21.2V(BR) min at IR 1.0mA;30.0V(CL) at Ipp 50A

SYMBOLS AND CODES EXPLAINED IN INTERPRETER

7. TRANSIENT SUPPRESSOR DIODES - Bipolar & Unipolar Types (Cont'd)

IN ORDER OF (1) TYPE (2) MAT AND (3) TYPE NO.

LINE No.	3 TYPE NUMBER	1 TYPE	2 MAT.	DWG. NO.	DESCRIPTION
1	ICTE18C	6	Si	A298ar	IR 2.0uA at 18VRWM;21.2V(BR) min at IR 1.0mA;30.0V(CL) at Ipp 50A
2	ICTE22	6	Si	A298ar	IR 2.0uA at 22VRWM;25.9V(BR) min at IR 1.0mA;37.5V(CL) at Ipp 40A
3	ICTE22C	6	Si	A298ar	IR 2.0uA at 22VRWM;25.9V(BR) min at IR 1.0mA;37.5V(CL) at Ipp 40A
4	ICTE36	6	Si	A298ar	IR 2.0uA at 36VRWM;42.4V(BR) min at IR 1.0mA;65.2V(CL) at Ipp 23A
5	ICTE36C	6	Si	A298ar	IR 2.0uA at 36VRWM;42.4V(BR) min at IR 1.0mA;65.2V(CL) at Ipp 23A
6	ICTE45	6	Si	A298ar	IR 2.0uA at 45VRWM;52.9V(BR) min at IR 1.0mA;78.9V(CL) at Ipp 19A
7	ICTE45C	6	Si	A298ar	IR 2.0uA at 45VRWM;52.9V(BR) min at IR 1.0mA;78.9V(CL) at Ipp 19A
8	IN6313	6	Si	A398i	Vz2 nom,±5%,Iz 20mA,3.6V;Zz 22Ω;IZM 167mA;VR 1.0V;ir surge 1.65A;PT 750mW
9	IN6321	6	Si	A398i	Vz2 nom,±5%,Iz 20mA, 7.5V;Zz 4.0Ω;IZM 83mA;VR 5.0V;ir Surge 1.16A;PT 750mW
10	IN6322	6	Si	A398i	Vz2 nom,±5%,Iz 20mA, 7.5V;Zz 4.0±;IZM 83mA;VR 5.0V;ir Surge 1.16A;PT 750mW
11	JR135V	6	Si	TO92	H.V. Protection Diode; Top 135°C Max; VF 135; IF 770uA max;2Lead TO 92
12	JR170V	6	Si	TO92	H.V. Protection Diode; Top 135°C Max; VF 170; IF 770uA max;2Lead TO 92
13	JR200V	6	Si	TO92	H.V. Protection Diode; Top 135°C Max; VF 200; IF 770uA max;2Lead TO 92
14	JR220V	6	Si	TO92	H.V. Protection Diode; Top 135°C Max; VF 220; IF 770uA max;2Lead TO 92
15	JR240V	6	Si	TO92	H.V. Protection Diode; Top 135°C Max; VF 240; IF 770uA max;2Lead TO 92
16	L4B5.1	6	Si	A344q▼	BV4.8-5.4Vat IT 5.0mA;VR4.2Vat IR5.0mA max;PRSM1.5kw;Clamp.Volt 8.0V
17	L4B5.6	6	Si	A344q▼	BV5.3-5.9Vat IT 5.0mA;VR4.7Vat IR5.0mA max;PRSM1.5kw;Clamp.Volt 8.0V
18	L4B6.2	6	Si	A344q▼	BV5.8-6.6Vat IT 5.0mA;VR5.2Vat IR2.0mA max;PRSM1.5kw;Clamp.Volt 8.0V
19	L4B6.8	6	Si	A344q▼	BV6.4-7.2Vat IT 5.0mA;VR5.7Vat IR1.0mA max;PRSM1.5kw;Clamp.Volt 10.5V
20	L4B7.5	6	Si	A344q▼	BV7.1-7.9Vat IT 5.0mA;VR6.3Vat IR500uA max;PRSM1.5kw;Clamp.Volt 11.3V
21	L4B8.2	6	Si	A344q▼	BV7.7-8.7Vat IT 5.0mA;VR6.9Vat IR200uA max;PRSM1.5kw;Clamp.Volt 12.1V
22	L4B9.1	6	Si	A344q▼	BV8.6-9.6Vat IT 1.0mA;VR7.7Vat IR50uA max;PRSM1.5kw;Clamp.Volt 13.4V
23	L4B10	6	Si	A344q▼	BV9.5-10.5Vat IT 1.0mA;VR8.5Vat IR10uA max;PRSM1.5kw;Clamp.Volt 14.5V
24	L4B11	6	Si	A344q▼	BV10.4-11.6Vat IT 1.0mA;VR9.3Vat IR10uA max;PRSM1.5kw;Clamp.Volt 15.6V
25	L4B12	6	Si	A344q▼	BV11.4-12.7Vat IT 1.0mA;VR10.2Vat IR10uA max;PRSM1.5kw;Clamp.Volt 16.7V
26	L4B13	6	Si	A344q▼	BV12.4-14.1Vat IT 1.0mA;VR11.1Vat IR10uA max;PRSM1.5kw;Clamp.Volt 18.2V
27	L4B15	6	Si	A344q▼	BV13.8-15.6Vat IT 1.0mA;VR12.4Vat IR10uA max;PRSM1.5kw;Clamp.Volt 21.2V
28	L4B16	6	Si	A344q▼	BV15.3-17.1Vat IT1.0mA;VR13.7Vat IR 10uAmax;PRSM 1.5kw;Clamp.Volt22.5V
29	L4B18	6	Si	A344q▼	BV16.8-19.1Vat IT1.0mA;VR15.1Vat IR 10uAmax;PRSM 1.5kw;Clamp.Volt25.2V
30	L4B20	6	Si	A344q▼	BV18.8-21.2Vat IT1.0mA;VR16.9Vat IR 10uAmax;PRSM 1.5kw;Clamp.Volt27.7V
31	L4B22	6	Si	A344q▼	BV20.8-23.3Vat IT1.0mA;VR18.7Vat IR 10uAmax;PRSM 1.5kw;Clamp.Volt30.6V
32	L4B24	6	Si	A344q▼	BV22.7-25.9Vat IT1.0mA;VR20.4Vat IR 10uAmax;PRSM 1.5kw;Clamp.Volt33.2V
33	L4B27	6	Si	A344q▼	BV25.1-28.9Vat IT1.0mA;VR22.5Vat IR 10uAmax;PRSM 1.5kw;Clamp.Volt37.5V
34	L4B30	6	Si	A344q▼	BV28.0-32.0Vat IT1.0mA;VR25.2Vat IR 10uAmax;PRSM 1.5kw;Clamp.Volt41.4V
35	L4B33	6	Si	A344q▼	BV31.0-35.0Vat IT1.0mA;VR27.9Vat IR 10uAmax;PRSM 1.5kw;Clamp.Volt45.7V
36	L4B36	6	Si	A344q▼	BV34.0-38.0Vat IT1.0mA;VR30.6Vat IR 10uAmax;PRSM 1.5kw;Clamp.Volt49.9V
37	L4B39	6	Si	A344q▼	BV37.0-41.0Vat IT1.0mA;VR33.2Vat IR 10uAmax;PRSM 1.5kw;Clamp.Volt53.9V
38	L4B43	6	Si	A344q▼	BV40.0-46.0Vat IT1.0mA;VR36.0Vat IR 10uAmax;PRSM 1.5kw;Clamp.Volt59.3V
39	L4B47	6	Si	A344q▼	BV44.0-50.0Vat IT1.0mA;VR39.6Vat IR 10uAmax;PRSM 1.5kw;Clamp.Volt64.8V
40	L4B51	6	Si	A344q▼	BV48.0-54.0Vat IT1.0mA;VR43.2Vat IR 10uAmax;PRSM 1.5kw;Clamp.Volt70.1V
41	L4B56	6	Si	A344q▼	BV52.0-60.0Vat IT1.0mA;VR46.8Vat IR 10uAmax;PRSM 1.5kw;Clamp.Volt77V
42	L4B62	6	Si	A344q▼	BV58.0-66.0Vat IT1.0mA;VR52.2Vat IR 10uAmax;PRSM 1.5kw;Clamp.Volt85V
43	L4B68	6	Si	A344q▼	BV64.0-72.0Vat IT1.0mA;VR57.6Vat IR 10uAmax;PRSM 1.5kw;Clamp.Volt92V
44	L4B75	6	Si	A344q▼	BV70.0-79.0Vat IT1.0mA;VR63.0Vat IR 10uAmax;PRSM 1.5kw;Clamp.Volt103V
45	L4B82	6	Si	A344q▼	BV77.0-87.0Vat IT1.0mA;VR69.0Vat IR 10uAmax;PRSM 1.5kw;Clamp.Volt113V
46	L4B91	6	Si	A344q▼	BV85.0-96.0Vat IT1.0mA;VR76.0Vat IR 10uAmax;PRSM 1.5kw;Clamp.Volt125V
47	L4B100	6	Si	A344q▼	BV94.0-106Vat IT1.0mA;VR84.0Vat IR 10uAmax;PRSM 1.5kw;Clamp.Volt137V
48	L4B110	6	Si	A344q▼	BV104-116Vat IT1.0mA;VR93.0Vat IR 10uAmax;PRSM 1.5kw;Clamp.Volt152V
49	L4B120	6	Si	A344q▼	BV114-127Vat IT1.0mA;VR102Vat IR 10uAmax;PRSM 1.5kw;Clamp.Volt165V
50	L4B130	6	Si	A344q▼	BV124-141Vat IT1.0mA;VR111Vat IR 10uAmax;PRSM 1.5kw;Clamp.Volt179V
51	L4B150	6	Si	A344q▼	BV138-156Vat IT1.0mA;VR124Vat IR 10uAmax;PRSM 1.5kw;Clamp.Volt207V
52	L4B160	6	Si	A344q▼	BV150-171Vat IT1.0mA;VR137Vat IR 10uAmax;PRSM 1.5kw;Clamp.Volt230V
53	L4B180	6	Si	A344q▼	BV168-191Vat IT1.0mA;VR151Vat IR 10uAmax;PRSM 1.5kw;Clamp.Volt246V
54	L4B200	6	Si	A344q▼	BV188-212Vat IT1.0mA;VR169Vat IR 10uAmax;PRSM 1.5kw;Clamp.Volt274V
55	L4H5.4	6	Si	A344q▼	BV5.3-5.5Vat IT5.0mA;VR4.7Vat IR1.0Amax;PRSM1.5kw;Clamp.Volt8.0V
56	L4H6.2A	6	Si	A344q▼	BV6.0-6.4Vat IT1.0mA;VR5.0Vat IR300Amax;PRSM1.5kw;Clamp.Volt8.0V
57	L6B5.1	6	Si	S29c▼	BV4.8-5.4Vat IT25mA;VR4.2Vat IR15mAmax;PRSM50kw;Clamp Volt8.0V
58	L6B5.6	6	Si	S29c▼	BV5.3-5.9Vat IT25mA;VR4.7Vat IR15mAmax;PRSM50kw;Clamp Volt8.0V
59	L6B6.2	6	Si	S29c▼	BV5.8-6.6Vat IT20mA;VR5.2Vat IR10mAmax;PRSM50kw;Clamp Volt10V
60	L6B6.8	6	Si	S29c▼	BV6.4-7.2Vat IT25mA;VR5.7Vat IR5.0mAmax;PRSM50kw;Clamp Volt10.5V
61	L6B7.5	6	Si	S29c▼	BV7.1-7.9Vat IT25mA;VR6.3Vat IR1.0mAmax;PRSM50kw;Clamp Volt11.3V
62	L6B8.2	6	Si	S29c▼	BV7.7-8.7Vat IT25mA;VR6.9Vat IR1.0mAmax;PRSM50kw;Clamp Volt12.1V
63	L6B9.1	6	Si	S29c▼	BV8.6-9.6Vat IT10mA;VR7.7Vat IR500mAmax;PRSM50kw;Clamp Volt13.4V
64	L6B10	6	Si	S29c▼	BV9.5-10.5Vat IT10mA;VR8.5Vat IR100uAmax;PRSM50kw;Clamp Volt 14.5V
65	L6B11	6	Si	S29c▼	BV10.4-11.6Vat IT10mA;VR9.3Vat IR100uAmax;PRSM50kw;Clamp Volt 15.6V
66	L6B12	6	Si	S29c▼	BV11.4-12.7Vat IT10mA;VR10.2Vat IR100uAmax;PRSM50kw;Clamp Volt 16.7V
67	L6B13	6	Si	S29c▼	BV12.4-14.1Vat IT10mA;VR11.1Vat IR100uAmax;PRSM50kw;Clamp Volt 18.2V
68	L6B15	6	Si	S29c▼	BV13.8-15.6Vat IT10mA;VR12.4Vat IR100uAmax;PRSM50kw;Clamp Volt 21.2V
69	L6B16	6	Si	S29c▼	BV15.3-17.1Vat IT10mA;VR13.7Vat IR100uAmax;PRSM50kw;Clamp Volt 22.5V
70	L6B18	6	Si	S29c▼	BV16.8-19.1Vat IT10mA;VR15.1Vat IR100uAmax;PRSM50kw;Clamp Volt 25.2V
71	L6B20	6	Si	S29c▼	BV18.8-21.2Vat IT10mA;VR16.9Vat IR100uAmax;PRSM50kw;Clamp Volt 27.7V
72	L6B22	6	Si	S29c▼	BV20.8-23.3Vat IT10mA;VR18.7Vat IR100uAmax;PRSM50kw;Clamp Volt 30.6V
73	L6B24	6	Si	S29c▼	BV22.7-25.9Vat IT 10mA;VR20.4Vat IR 100uA max;PRSM 50kW;Clamp Volt 33.2V
74	L6B27	6	Si	S29c▼	BV25.1-28.9Vat IT10mA;VR22.5Vat IR100uAmax;PRSM50kw;Clamp Volt 37.5V
75	L6B30	6	Si	S29c▼	BV28.0-32.0Vat IT10mA;VR25.2Vat IR100uAmax;PRSM50kw;Clamp Volt 41.4V
76	L6B33	6	Si	S29c▼	BV31.0-35.0Vat IT10mA;VR27.9Vat IR100uAmax;PRSM50kw;Clamp Volt 45.7V
77	L6B36	6	Si	S29c▼	BV34.0-38.0Vat IT10mA;VR30.6Vat IR100uAmax;PRSM50kw;Clamp Volt 49.9V
78	L6B39	6	Si	S29c▼	BV37.0-41.0Vat IT10mA;VR33.2Vat IR100uAmax;PRSM50kw;Clamp Volt 53.9V
79	L6B43	6	Si	S29c▼	BV40.0-46.0Vat IT10mA;VR36.0Vat IR100uAmax;PRSM50kw;Clamp Volt 59.3V
80	L6B47	6	Si	S29c▼	BV44.0-50.0Vat IT10mA;VR39.6Vat IR100uAmax;PRSM50kw;Clamp Volt 64.8V
81	L6B51	6	Si	S29c▼	BV48.0-54.0Vat IT10mA;VR43.2Vat IR100uAmax;PRSM50kw;Clamp Volt 70.1V
82	L6B56	6	Si	S29c▼	BV52.0-60.0Vat IT10mA;VR46.8Vat IR100uAmax;PRSM50kw;Clamp Volt 77.0V
83	L6B62	6	Si	S29c▼	BV58.0-66.0Vat IT10mA;VR52.2Vat IR100uAmax;PRSM50kw;Clamp Volt 85.0V
84	L6B68	6	Si	S29c▼	BV64.0-72.0Vat IT10mA;VR57.6Vat IR100uAmax;PRSM50kw;Clamp Volt 92.0V
85	L6B75	6	Si	S29c▼	BV70.0-79.0Vat IT10mA;VR63.0Vat IR100uAmax;PRSM50kw;Clamp Volt 103V
86	L6B82	6	Si	S29c▼	BV77.0-87.0Vat IT10mA;VR69.0Vat IR100uAmax;PRSM50kw;Clamp Volt 113V
87	L6B91	6	Si	S29c▼	BV85.0-96.0Vat IT10mA;VR76.0Vat IR100uAmax;PRSM50kw;Clamp Volt 125V
88	L6B100	6	Si	S29c▼	BV94.0-106Vat IT10mA;VR84.0Vat IR100uAmax;PRSM50kw;Clamp Volt 137V
89	L6B110	6	Si	S29c▼	BV104-116Vat IT10mA;VR93.0Vat IR100uAmax;PRSM50kw;Clamp Volt 152V
90	L6B120	6	Si	S29c▼	BV114-127Vat IT10mA;VR102Vat IR100uAmax;PRSM50kw;Clamp Volt 165V
91	L6B130	6	Si	S29c▼	BV124-141Vat IT10mA;VR111Vat IR100uAmax;PRSM50kw;Clamp Volt 179V
92	L6B150	6	Si	S29c▼	BV138-156Vat IT10mA;VR124Vat IR100uAmax;PRSM50kw;Clamp Volt 207V
93	L6B160	6	Si	S29c▼	BV153-171Vat IT10mA;VR137Vat IR100uAmax;PRSM50kw;Clamp Volt 230V
94	L6B180	6	Si	S29c▼	BV168-191Vat IT10mA;VR151Vat IR100uAmax;PRSM50kw;Clamp Volt 246V
95	L6B200	6	Si	S29c▼	BV188-212Vat IT10mA;VR169Vat IR100uAmax;PRSM50kw;Clamp Volt 274V
96	L6H5.4	6	Si	S29c▼	BV5.3-5.5Vat IT25mA;VR4.7Vat IR15mAmax;PRSM50kw;Clamp Volt 7.5V
97	L6H6.2A	6	Si	S29c▼	BV6.0-6.4Vat IT10mA;VR5.0Vat IR5.0mAmax;PRSM50kw;Clamp Volt 8.0V
98	L7B5.1	6	Si	S87j▼	BV4.8-5.4Vat IT25mA;VR4.2Vat IR10mAmax;PRSM9.0kw;Clamp Volt 8.0V
99	L7B5.6	6	Si	S87j▼	BV5.3-5.9Vat IT25mA;VR4.7Vat IR5.0mAmax;PRSM9.0kw;Clamp Volt 8.0V
100	L7B6.2	6	Si	S87j▼	BV5.8-6.6Vat IT20mA;VR5.2Vat IR2.0mAmax;PRSM9.0kw;Clamp Volt 10V
101	L7B6.8	6	Si	S87j▼	BV6.4-7.2Vat IT10mA;VR5.7Vat IR1.0mAmax;PRSM9.0kw;Clamp Volt 10.5V
102	L7B7.5	6	Si	S87j▼	BV7.1-7.9Vat IT10mA;VR6.3Vat IR500uAmax;PRSM9.0kw;Clamp Volt 11.3V
103	L7B8.2	6	Si	S87j▼	BV7.7-8.7Vat IT10mA;VR6.9Vat IR200uAmax;PRSM9.0kw;Clamp Volt 12.1V
104	L7B9.1	6	Si	S87j▼	BV8.6-9.6Vat IT1.0mA;VR7.7Vat IR50uAmax;PRSM9.0kw;Clamp Volt 13.4V
105	L7B10	6	Si	S87j▼	BV9.5-10.5Vat IT1.0mA;VR8.5Vat IR10uAmax;PRSM9.0kw;Clamp Volt 14.5V
106	L7B11	6	Si	S87j▼	BV10.4-11.6Vat IT1.0mA;VR9.3Vat IR10uAmax;PRSM9.0kw;Clamp Volt 15.6V
107	L7B12	6	Si	S87j▼	BV11.4-12.7Vat IT1.0mA;VR10.2Vat IR10uAmax;PRSM9.0kw;Clamp Volt 16.7V
108	L7B13	6	Si	S87j▼	BV12.4-14.1Vat IT1.0mA;VR11.1Vat IR10uAmax;PRSM9.0kw;Clamp Volt 18.2V
109	L7B15	6	Si	S87j▼	BV13.8-15.6Vat IT1.0mA;VR12.4Vat IR10uAmax;PRSM9.0kw;Clamp Volt 21.2V
110	L7B16	6	Si	S87j▼	BV15.3-17.1Vat IT1.0mA;VR13.7Vat IR10uAmax;PRSM9.0kw;Clamp Volt 22.5V

7. TRANSIENT SUPPRESSOR DIODES - Bipolar & Unipolar Types (Cont'd)

IN ORDER OF (1) TYPE (2) MAT AND (3) TYPE NO.

LINE No.	3 TYPE NUMBER	1 TYPE	2 MAT.	DWG. NO.	DESCRIPTION
1	L7B18	6	Si	S87j▼	BV16.8-19.1Vat IT1.0mA;VR15.1Vat IR10uAmax;PRSM9.0kw;Clamp Volt 25.2V
2	L7B20	6	Si	S87j▼	BV18.8-21.2Vat IT1.0mA;VR16.9Vat IR10uAmax;PRSM9.0kw;Clamp Volt 27.7V
3	L7B22	6	Si	S87j▼	BV20.8-23.3Vat IT1.0mA;VR18.7Vat IR10uAmax;PRSM9.0kw;Clamp Volt 30.6V
4	L7B24	6	Si	S87j▼	BV22.7-25.9Vat IT1.0mA;VR20.4Vat IR10uAmax;PRSM9.0kw;Clamp Volt 33.2V
5	L7B27	6	Si	S87j▼	BV25.1-28.9Vat IT1.0mA;VR22.5Vat IR10uAmax;PRSM9.0kw;Clamp Volt 37.5V
6	L7B30	6	Si	S87j▼	BV28.0-32.0Vat IT1.0mA;VR25.2Vat IR10uAmax;PRSM9.0kw;Clamp Volt 41.4V
7	L7B33	6	Si	S87j▼	BV31.0-35.0Vat IT1.0mA;VR27.9Vat IR10uAmax;PRSM9.0kw;Clamp Volt 45.7V
8	L7B36	6	Si	S87j▼	BV34.0-38.0Vat IT1.0mA;VR30.6Vat IR10uAmax;PRSM9.0kw;Clamp Volt 49.9V
9	L7B39	6	Si	S87j▼	BV37.0-41.0Vat IT1.0mA;VR33.2Vat IR10uAmax;PRSM9.0kw;Clamp Volt 53.9V
10	L7B43	6	Si	S87j▼	BV40.0-46.0Vat IT1.0mA;VR36.0Vat IR10uAmax;PRSM9.0kw;Clamp Volt 59.3V
11	L7B47	6	Si	S87j▼	BV44.0-50.0Vat IT1.0mA;VR39.6Vat IR10uAmax;PRSM9.0kw;Clamp Volt 64.8V
12	L7B51	6	Si	S87j▼	BV48.0-54.0Vat IT1.0mA;VR43.2Vat IR10uAmax;PRSM9.0kw;Clamp Volt 70.1V
13	L7B56	6	Si	S87j▼	BV52.0-60.0Vat IT1.0mA;VR46.8Vat IR10uAmax;PRSM9.0kw;Clamp Volt 77.0V
14	L7B62	6	Si	S87j▼	BV58.0-66.0Vat IT1.0mA;VR52.2Vat IR10uAmax;PRSM9.0kw;Clamp Volt 85.0V
15	L7B68	6	Si	S87j▼	BV64.0-72.0Vat IT1.0mA;VR57.6Vat IR10uAmax;PRSM9.0kw;Clamp Volt 92.0V
16	L7B75	6	Si	S87j▼	BV70.0-79.0Vat IT1.0mA;VR63.0Vat IR10uAmax;PRSM9.0kw;Clamp Volt 103V
17	L7B82	6	Si	S87j▼	BV77.0-87.0Vat IT1.0mA;VR69.0Vat IR10uAmax;PRSM9.0kw;Clamp Volt 113V
18	L7B91	6	Si	S87j▼	BV85.0-96.0Vat IT1.0mA;VR76.0Vat IR10uAmax;PRSM9.0kw;Clamp Volt 125V
19	L7B100	6	Si	S87j▼	BV94.0-106Vat IT1.0mA;VR84.0Vat IR10uAmax;PRSM9.0kw;Clamp Volt 137V
20	L7B110	6	Si	S87j▼	BV104-116Vat IT1.0mA;VR93.0Vat IR10uAmax;PRSM9.0kw;Clamp Volt 152V
21	L7B120	6	Si	S87j▼	BV114-127Vat IT1.0mA;VR102Vat IR10uAmax;PRSM9.0kw;Clamp Volt 165V
22	L7B130	6	Si	S87j▼	BV124-141Vat IT1.0mA;VR111Vat IR10uAmax;PRSM9.0kw;Clamp Volt 179V
23	L7B150	6	Si	S87j▼	BV138-156Vat IT1.0mA;VR124Vat IR10uAmax;PRSM9.0kw;Clamp Volt 207V
24	L7B160	6	Si	S87j▼	BV153-171Vat IT1.0mA;VR137Vat IR10uAmax;PRSM9.0kw;Clamp Volt 230V
25	L7B180	6	Si	S87j▼	BV168-191Vat IT1.0mA;VR151Vat IR10uAmax;PRSM9.0kw;Clamp Volt 246V
26	L7B200	6	Si	S87j▼	BV188-212Vat IT1.0mA;VR169Vat IR10uAmax;PRSM9.0kw;Clamp Volt 274V
27	L7H5.4	6	Si	S87j▼	BV5.3-5.5Vat IT25mA;VR4.7Vat IR5.0mAmax;PRSM9.0kw;Clamp Volt 7.5V
28	L7H6.2A	6	Si	S87j▼	BV6.0-6.4Vat IT1.0mA;VR5.0Vat IR300uAmax;PRSM9.0kw;Clamp Volt 8.0V
29	L8B5.1	6	Si	A21a▼	BV4.8-5.4Vat IT25mA;VR4.2Vat IR10mAmax;PRSM9.0kw;Clamp Volt 8.0V
30	L8B5.6	6	Si	A21a▼	BV5.3-5.9Vat IT25mA;VR4.7Vat IR5.0mAmax;PRSM9.0kw;Clamp Volt 8.0V
31	L8B6.2	6	Si	A21a▼	BV5.8-6.6Vat IT20mA;VR5.2Vat IR2.0mAmax;PRSM9.0kw;Clamp Volt 10V
32	L8B6.8	6	Si	A21a▼	BV6.4-7.2Vat IT10mA;VR5.7Vat IR1.0mAmax;PRSM9.0kw;Clamp Volt 10.5V
33	L8B7.5	6	Si	A21a▼	BV7.1-7.9Vat IT10mA;VR6.3Vat IR500uAmax;PRSM9.0kw;Clamp Volt 11.3V
34	L8B8.2	6	Si	A21a▼	BV7.7-8.7Vat IT10mA;VR6.9Vat IR200uAmax;PRSM9.0kw;Clamp Volt 12.1V
35	L8B9.1	6	Si	A21a▼	BV8.6-9.6Vat IT1.0mA;VR7.7Vat IR50uAmax;PRSM9.0kw;Clamp Volt 13.4V
36	L8B10	6	Si	A21a▼	BV9.5-10.5Vat IT1.0mA;VR8.5Vat IR10uAmax;PRSM9.0kw;Clamp Volt 14.5V
37	L8B11	6	Si	A21a▼	BV10.4-11.6Vat IT1.0mA;VR9.3Vat IR10uAmax;PRSM9.0kw;Clamp Volt 15.6V
38	L8B12	6	Si	A21a▼	BV11.4-12.7Vat IT1.0mA;VR10.2Vat IR10uAmax;PRSM9.0kw;Clamp Volt 16.7V
39	L8B13	6	Si	A21a▼	BV12.4-14.1Vat IT1.0mA;VR11.1Vat IR10uAmax;PRSM9.0kw;Clamp Volt 18.2V
40	L8B15	6	Si	A21a▼	BV13.8-15.6Vat IT1.0mA;VR12.4Vat IR10uAmax;PRSM9.0kw;Clamp Volt 21.2V
41	L8B16	6	Si	A21a▼	BV15.3-17.1Vat IT1.0mA;VR13.7Vat IR10uAmax;PRSM9.0kw;Clamp Volt 22.5V
42	L8B18	6	Si	A21a▼	BV16.8-19.1Vat IT1.0mA;VR15.1Vat IR10uAmax;PRSM9.0kw;Clamp Volt 25.2V
43	L8B20	6	Si	A21a▼	BV18.8-21.2Vat IT1.0mA;VR16.9Vat IR10uAmax;PRSM9.0kw;Clamp Volt 27.7V
44	L8B22	6	Si	A21a▼	BV20.8-23.3Vat IT1.0mA;VR18.7Vat IR10uAmax;PRSM9.0kw;Clamp Volt 30.6V
45	L8B24	6	Si	A21a▼	BV22.7-25.9Vat IT1.0mA;VR20.4Vat IR10uAmax;PRSM9.0kw;Clamp Volt 33.2V
46	L8B27	6	Si	A21a▼	BV25.1-28.9Vat IT1.0mA;VR22.5Vat IR10uAmax;PRSM9.0kw;Clamp Volt 37.5V
47	L8B30	6	Si	A21a▼	BV28.0-32.0Vat IT1.0mA;VR25.2Vat IR10uAmax;PRSM9.0kw;Clamp Volt 41.4V
48	L8B33	6	Si	A21a▼	BV31.0-35.0Vat IT1.0mA;VR27.9Vat IR10uAmax;PRSM9.0kw;Clamp Volt 45.7V
49	L8B36	6	Si	A21a▼	BV34.0-38.0Vat IT1.0mA;VR30.6Vat IR10uAmax;PRSM9.0kw;Clamp Volt 49.9V
50	L8B39	6	Si	A21a▼	BV37.0-41.0Vat IT1.0mA;VR33.2Vat IR10uAmax;PRSM9.0kw;Clamp Volt 53.9V
51	L8B43	6	Si	A21a▼	BV40.0-46.0Vat IT1.0mA;VR36.0Vat IR10uAmax;PRSM9.0kw;Clamp Volt 59.3V
52	L8B47	6	Si	A21a▼	BV44.0-50.0Vat IT1.0mA;VR39.6Vat IR10uAmax;PRSM9.0kw;Clamp Volt 64.8V
53	L8B51	6	Si	A21a▼	BV48.0-54.0Vat IT1.0mA;VR43.2Vat IR10uAmax;PRSM9.0kw;Clamp Volt 70.1V
54	L8B56	6	Si	A21a▼	BV52.0-60.0Vat IT1.0mA;VR46.8Vat IR10uAmax;PRSM9.0kw;Clamp Volt 77.0V
55	L8B62	6	Si	A21a▼	BV58.0-66.0Vat IT1.0mA;VR52.2Vat IR10uAmax;PRSM9.0kw;Clamp Volt 85.0V
56	L8B68	6	Si	A21a▼	BV64.0-72.0Vat IT1.0mA;VR57.6Vat IR10uAmax;PRSM9.0kw;Clamp Volt 92.0V
57	L8B75	6	Si	A21a▼	BV70.0-79.0Vat IT1.0mA;VR63.0Vat IR10uAmax;PRSM9.0kw;Clamp Volt 103V
58	L8B82	6	Si	A21a▼	BV77.0-87.0Vat IT1.0mA;VR69.0Vat IR10uAmax;PRSM9.0kw;Clamp Volt 113V
59	L8B91	6	Si	A21a▼	BV85.0-96.0Vat IT1.0mA;VR76.0Vat IR10uAmax;PRSM9.0kw;Clamp Volt 125V
60	L8B100	6	Si	A21a▼	BV94.0-106Vat IT1.0mA;VR84.0Vat IR10uAmax;PRSM9.0kw;Clamp Volt 137V
61	L8B110	6	Si	A21a▼	BV104-116Vat IT1.0mA;VR93.0Vat IR10uAmax;PRSM9.0kw;Clamp Volt 152V
62	L8B120	6	Si	A21a▼	BV114-127Vat IT1.0mA;VR102Vat IR10uAmax;PRSM9.0kw;Clamp Volt 165V
63	L8B130	6	Si	A21a▼	BV124-141Vat IT1.0mA;VR111Vat IR10uAmax;PRSM9.0kw;Clamp Volt 179V
64	L8B150	6	Si	A21a▼	BV138-156Vat IT1.0mA;VR124Vat IR10uAmax;PRSM9.0kw;Clamp Volt 207V
65	L8B160	6	Si	A21a▼	BV153-171Vat IT1.0mA;VR137Vat IR10uAmax;PRSM9.0kw;Clamp Volt 230V
66	L8B180	6	Si	A21a▼	BV168-191Vat IT1.0mA;VR151Vat IR10uAmax;PRSM9.0kw;Clamp Volt 246V
67	L8B200	6	Si	A21a▼	BV188-212Vat IT1.0mA;VR169Vat IR10uAmax;PRSM9.0kw;Clamp Volt 274V
68	L8H5.4	6	Si	A21a▼	BV5.3-5.5Vat IT25mA;VR4.7Vat IR5.0mAmax;PRSM9.0kw;Clamp Volt 7.5V
69	L8H6.2A	6	Si	A21a▼	BV6.0-6.4V at IT1.0mA;VR5.0V at IR300uA max; PRSM9.0kW; Clamp Volt 8.0V
70	L9B5.1	6	Si	A19d▼	BV4.8-5.4Vat IT25mA;VR4.2Vat IR10mAmax;PRSM9.0kw;Clamp Volt 8.0V
71	L9B5.6	6	Si	A19d▼	BV5.3-5.9Vat IT25mA;VR4.7Vat IR5.0mAmax;PRSM9.0kw;Clamp Volt 8.0V
72	L9B6.2	6	Si	A19d▼	BV5.8-6.6Vat IT20mA;VR5.2Vat IR2.0mAmax;PRSM9.0kw;Clamp Volt 10.0V
73	L9B6.8	6	Si	A19d▼	BV6.4-7.2Vat IT10mA;VR5.7Vat IR1.0mAmax;PRSM9.0kw;Clamp Volt 10.5V
74	L9B7.5	6	Si	A19d▼	BV7.1-7.9Vat IT10mA;VR6.3Vat IR500uAmax;PRSM9.0kw;Clamp Volt 11.3V
75	L9B8.2	6	Si	A19d▼	BV7.7-8.7Vat IT10mA;VR6.9Vat IR200uAmax;PRSM9.0kw;Clamp Volt 12.1V
76	L9B9.1	6	Si	A19d▼	BV8.6-9.6Vat IT1.0mA;VR7.7Vat IR50uAmax;PRSM9.0kw;Clamp Volt 13.4V
77	L9B10	6	Si	A19d▼	BV9.5-10.5Vat IT1.0mA;VR8.5Vat IR10uAmax;PRSM9.0kw;Clamp Volt 14.5V
78	L9B11	6	Si	A19d▼	BV10.4-11.6Vat IT1.0mA;VR9.3Vat IR10uAmax;PRSM9.0kw;Clamp Volt 15.6V
79	L9B12	6	Si	A19d▼	BV11.4-12.7Vat IT1.0mA;VR10.2Vat IR10uAmax;PRSM9.0kw;Clamp Volt 16.7V
80	L9B13	6	Si	A19d▼	BV12.4-14.1Vat IT1.0mA;VR11.1Vat IR10uAmax;PRSM9.0kw;Clamp Volt 18.2V
81	L9B15	6	Si	A19d▼	BV13.8-15.6Vat IT1.0mA;VR12.4Vat IR10uAmax;PRSM9.0kw;Clamp Volt 21.2V
82	L9B16	6	Si	A19d▼	BV15.3-17.1Vat IT1.0mA;VR13.7Vat IR10uAmax;PRSM9.0kw;Clamp Volt 22.5V
83	L9B18	6	Si	A19d▼	BV16.8-19.1Vat IT1.0mA;VR15.1Vat IR10uAmax;PRSM9.0kw;Clamp Volt 25.2V
84	L9B20	6	Si	A19d▼	BV18.8-21.2Vat IT1.0mA;VR16.9Vat IR10uAmax;PRSM9.0kw;Clamp Volt 27.7V
85	L9B22	6	Si	A19d▼	BV20.8-23.3Vat IT1.0mA;VR18.7Vat IR10uAmax;PRSM9.0kw;Clamp Volt 30.6V
86	L9B24	6	Si	A19d▼	BV22.7-25.9Vat IT1.0mA;VR20.4Vat IR10uAmax;PRSM9.0kw;Clamp Volt 33.2V
87	L9B27	6	Si	A19d▼	BV25.1-28.9Vat IT1.0mA;VR22.5Vat IR10uAmax;PRSM9.0kw;Clamp Volt 37.5V
88	L9B30	6	Si	A19d▼	BV28.0-32.0Vat IT1.0mA;VR25.2Vat IR10uAmax;PRSM9.0kw;Clamp Volt 41.4V
89	L9B33	6	Si	A19d▼	BV31.0-35.0Vat IT1.0mA;VR27.9Vat IR10uAmax;PRSM9.0kw;Clamp Volt 45.7V
90	L9B36	6	Si	A19d▼	BV34.0-38.0Vat IT1.0mA;VR30.6Vat IR10uAmax;PRSM9.0kw;Clamp Volt 49.9V
91	L9B39	6	Si	A19d▼	BV37.0-41.0Vat IT1.0mA;VR33.2Vat IR10uAmax;PRSM9.0kw;Clamp Volt 53.9V
92	L9B43	6	Si	A19d▼	BV40.0-46.0Vat IT1.0mA;VR36.0Vat IR10uAmax;PRSM9.0kw;Clamp Volt 59.3V
93	L9B47	6	Si	A19d▼	BV44.0-50.0Vat IT1.0mA;VR39.6Vat IR10uAmax;PRSM9.0kw;Clamp Volt 64.8V
94	L9B51	6	Si	A19d▼	BV48.0-54.0Vat IT1.0mA;VR43.2Vat IR10uAmax;PRSM9.0kw;Clamp Volt 70.1V
95	L9B56	6	Si	A19d▼	BV52.0-60.0Vat IT1.0mA;VR46.8Vat IR10uAmax;PRSM9.0kw;Clamp Volt 77.0V
96	L9B62	6	Si	A19d▼	BV58.0-66.0Vat IT1.0mA;VR52.2Vat IR10uAmax;PRSM9.0kw;Clamp Volt 85.0V
97	L9B68	6	Si	A19d▼	BV64.0-72.0Vat IT1.0mA;VR57.6Vat IR10uAmax;PRSM9.0kw;Clamp Volt 92.0V
98	L9B75	6	Si	A19d▼	BV70.0-79.0Vat IT1.0mA;VR63.0Vat IR10uAmax;PRSM9.0kw;Clamp Volt 103V
99	L9B82	6	Si	A19d▼	BV77.0-87.0Vat IT1.0mA;VR69.0Vat IR10uAmax;PRSM9.0kw;Clamp Volt 113V
100	L9B91	6	Si	A19d▼	BV85.0-96.0Vat IT1.0mA;VR76.0Vat IR10uAmax;PRSM9.0kw;Clamp Volt 125V
101	L9B100	6	Si	A19d▼	BV94.0-106Vat IT1.0mA;VR84.0Vat IR10uAmax;PRSM9.0kw;Clamp Volt 137V
102	L9B110	6	Si	A19d▼	BV104-116Vat IT1.0mA;VR93.0Vat IR10uAmax;PRSM9.0kw;Clamp Volt 152V
103	L9B120	6	Si	A19d▼	BV114-127Vat IT1.0mA;VR102Vat IR10uAmax;PRSM9.0kw;Clamp Volt 165V
104	L9B130	6	Si	A19d▼	BV124-141Vat IT1.0mA;VR111Vat IR10uAmax;PRSM9.0kw;Clamp Volt 179V
105	L9B150	6	Si	A19d▼	BV138-156Vat IT1.0mA;VR124Vat IR10uAmax;PRSM9.0kw;Clamp Volt 207V
106	L9B160	6	Si	A19d▼	BV153-171Vat IT1.0mA;VR137Vat IR10uAmax;PRSM9.0kw;Clamp Volt 230V
107	L9B180	6	Si	A19d▼	BV168-191Vat IT1.0mA;VR151Vat IR10uAmax;PRSM9.0kw;Clamp Volt 246V
108	L9B200	6	Si	A19d▼	BV188-212Vat IT1.0mA;VR169Vat IR10uAmax;PRSM9.0kw;Clamp Volt 274V
109	L9H5.4	6	Si	A19d▼	BV5.3-5.5Vat IT25mA;VR4.7Vat IR5.0mAmax;PRSM9.0kw;Clamp Volt 7.5V
110	L9H6.2A	6	Si	A19d▼	BV6.0-6.4Vat IT1.0mA;VR5.0Vat IR300uAmax;PRSM9.0kw;Clamp Volt 8.0V

7. TRANSIENT SUPPRESSOR DIODES - Bipolar & Unipolar Types (Cont'd)

IN ORDER OF (1) TYPE (2) MAT AND (3) TYPE NO.

LINE No.	3 TYPE NUMBER	1 TYPE	2 MAT.	DWG. NO.	DESCRIPTION
1	LC6.5	6	Si	DO13	VC 12.3V max;VR 6.5V;BV8.82 max at 10mA;Temp 175°C max Oper
2	LC6.5A	6	Si	DO13	VC 11.2V max;VR 6.5V;BV 7.98V max at 10mA;Temp 175°C max Oper
3	LC7.0	6	Si	DO13	VC 13.3V max;VR 7.0V;BV 9.51V max at 10mA;Temp 175°C max Oper
4	LC7.0A	6	Si	DO13	VC 12V max;VR 7.0V;BV 8.60V max at 10mA;Temp 175°C max Oper
5	LC7.5	6	Si	DO13	VC 14.3V max;VR 7.5V;BV 10.2V max at 10mA;Temp 175°C max Oper
6	LC7.5A	6	Si	DO13	VC 12.9V max;VR 7.5V;BV 9.21V max at 10mA;Temp 175°C max Oper
7	LC8.0	6	Si	DO13	VC15V max; VR 8.0V; BV 10.9V max at 1.0mA; Temp 175°Cmax Oper
8	LC8.0A	6	Si	DO13	VC13.6V max;VR8.0V;BV9.83 max at 1.0mA;Temp 175°C max Oper
9	LC8.5	6	Si	DO13	VC15.9V max; VR8.5V; BV11.5V max at 1.0mA; Temp 175°C max Oper
10	LC8.5A	6	Si	DO13	VC 14.4V max;VR 8.5V; BV 10.4V max at 1.0mA; Temp 175°Cmax Oper
11	LC9.0	6	Si	DO13	VC16.9V max; VR 9.0V; BV12.2V max at 1.0mA; Temp 175°C max Oper
12	LC9.0A	6	Si	DO13	VC15.4V max;VR9.0V;BV11.1V max at 1.0mA;Temp 175°C max Oper
13	LC10	6	Si	DO13	VC18.8 V max; VR10V; BV 13.6V max at 1.0mA; Temp 175°C max Oper
14	LC10A	6	Si	DO13	VC17V max;VR10V;BV12.3V max at 1.0mA;Temp 175°C max Oper
15	LC11	6	Si	DO13	VC 20.1V max; VR11V; BV 14.9V max at 1.0mA; Temp 175°C max Oper
16	LC11A	6	Si	DO13	VC 18.2V max; VR 11V; BV 13.5V max at 1.0mA; Temp 175°C max Oper
17	LC12	6	Si	DO13	VC 22V max; VR 12V; BV 16.3V max at 1.0mA; Temp 175°C max Oper
18	LC12A	6	Si	DO13	VC 19.9V max; VR 12V; BV 14.7V max at 1.0mA; Temp 175°C max Oper
19	LC13	6	Si	DO13	VC 23.8V max; VR 13V; BV 17.6V max at 1.0mA; Temp 175°C max Oper
20	LC13A	6	Si	DO13	VC 21.5V max; VR 13V; BV 15.9V max at 1.0mA; Temp 175°C max Oper
21	LC14	6	Si	DO13	VC 25.8V max; VR 14V; BV 19.1V max at 1.0mA; Temp 175°C max Oper
22	LC14A	6	Si	DO13	VC 23.2V max; VR 14V; BV 17.2V max at 1.0mA; Temp 175°C max Oper
23	LC15	6	Si	DO13	VC 26.9V max; VR15V; BV 20.4V max at 1.0mA; Temp 175°C max Oper
24	LC15A	6	Si	DO13	VC 24.4V max; VR 15V; BV 18.5V max at 1.0mA; Temp 175°C max Oper
25	LC16	6	Si	DO13	VC 28.8V max; VR 16V; BV 21.8V max at 1.0mA; Temp 175°C max Oper
26	LC16A	6	Si	DO13	VC26V max;VR16V;BV19.7V max at 1.0mA;Temp 175°C max Oper
27	LC17	6	Si	DO13	VC30.5V max;VR17V;BV23.1V max at 1.0mA;Temp 175°C max Oper
28	LC17A	6	Si	DO13	VC 27.6V max; VR 17V; BV 20.9V max at 1.0mA; Temp 175°C max Oper
29	LC18	6	Si	DO13	VC 23.2V max; VR 18V; BV 24.4V max at 1.0mA; Temp 175°C max Oper
30	LC18A	6	Si	DO13	VC 29.2V max; VR 18V; BV 22.1V max at 1.0mA; Temp 175°C max Oper
31	LC20	6	Si	DO13	VC 35.8V max;VR 20V;BV27.1V max at 1.0mA;Temp 175°C max Oper
32	LC20A	6	Si	DO13	VC 32.4V max;VR 20V;BV 24.5V max at 1.0mA;Temp 175° max Oper
33	LC22	6	Si	DO13	VC 39.4Vmax; VR 22V;BV29.8V max at 1.0mA;Temp 175°C max Oper
34	LC22A	6	Si	DO13	VC 35.5V max;VR 22V;BV26.9V max at 1.0mA;Temp 175°C max Oper
35	LC24	6	Si	DO13	VC 43V max;VR 24V;BV 32.6V maxat 1.0mA;Temp 175°C max Oper
36	LC24A	6	Si	DO13	VC 38.9V max;VR 24V;BV 29.5V max at 1.0mA;Temp 175°C max Oper
37	LC26	6	Si	DO13	VC 46.6V max;VR 26V;BV35.3V max at 1.0ma;Temp 175°C max Oper:
38	LC26A	6	Si	DO13	VC 42.1V max;VR 26V;BV31.9V max at 1.0mA;Temp 175°C max Oper
39	LC28	6	Si	DO13	VC 50.1V max;VR 28V;BV 38V maxat 1.0mA;Temp 175°C max Oper
40	LC28A	6	Si	DO13	VC 45.4V max;VR 28V;BV 34.4V max at 1.0mA;Temp 175°C max Oper
41	LC30	6	Si	DO13	VC 53.5V max;VR 30V;BV 40.7V max at 1.0mA;Temp 175°C max Operr
42	LC30A	6	Si	DO13	VC 48.4V max;VR 30V;BV 36.8V max at 1.0mA;Temp 175°C max Oper
43	LC33	6	Si	DO13	VC59V max;VR33V;BV44.9V max at1.0mA;Temp 175°C max Oper
44	LC33A	6	Si	DO13	VC53.3V max;VR33V;BV40.6Vmax at 1.0mA;Temp 175°C max Oper
45	LC36	6	Si	DO13	VC 64.3 V max; VR36V; BV 48.9V max at 1.0mA; Temp 175°C max Oper
46	LC36A	6	Si	DO13	VC 58.1V max; VR 36V; BV 44.2V max at 1.0mA; Temp 175°C max Oper
47	LC40	6	Si	DO13	VC 71.4V max; VR 40V; BV 54.3V max at 1.0mA; Temp 175°C max Oper
48	LC40A	6	Si	DO13	VC 64.5V max; VR 40V; BV 49.1V max at 1.0 mA; Temp 175°C max Oper
49	LC43	6	Si	DO13	VC76.7Vmax;VR43V;BV58.4Vmax at 1.0mA;Temp 175°C max Oper
50	LC43A	6	Si	DO13	VC 69.4V max; VR 43V; BV 52.8Vmax at 1.0mA; Temp 175°C max Oper
51	LC45	6	Si	DO13	VC 60.3V max; VR 45V; BV 61.1V max at 1.0mA; Temp 175°C max Oper
52	LC45A	6	Si	DO13	VC72.7Vmax;VR45V;BV55.3Vmax at 1.0mA;Temp 175°C max Oper
53	LC48	6	Si	DO13	VC 85.5V max; VR 48V; BV 65.1V max at 1.0mA; Temp 175°C max Oper
54	LC48A	6	Si	DO13	VC 77.4V max; VR 48V; BV 58.9V max at 1.0mA; Temp 175°C max Oper
55	LC51	6	Si	DO13	VC91.1V max; VR 51V; BV 69.3V max at 1.0mA; Temp 175°C max Oper
56	LC51A	6	Si	DO13	VC 82.4V max; VR 51V; BV 62.7V max at 1.0mA; Temp 175°C max Oper
57	LC54	6	Si	DO13	VC 96.3V max; VR 54V; BV 73.3V max at 1.0mA; Temp 175°C max Oper
58	LC54A	6	Si	DO13	VC87.1V max;VR54V;BV66.3V max at 1.0mA;Temp 175°C max Oper
59	LC58	6	Si	DO13	VC 103V max; VR 58V; BV 78.7V max at 1.0mA; Temp 175°C max Oper
60	LC58A	6	Si	DO13	VC 93.6V max; VR 58V; BV 71.2V max at 1.0 mA; Temp 175°C max Oper
61	LC60	6	Si	DO13	VC 107V max; VR 60V; BV 81.5V max at 1.0mA; Temp 175°C max Oper
62	LC60A	6	Si	DO13	VC96.8V max; VR 60V; BV 73.7V max at 1.0mA; Temp 175°C max Oper
63	LC64	6	Si	DO13	VC114V max;VR64V;BV86.9V max at 1.0mA;Temp 175°C max Oper
64	LC64A	6	Si	DO13	VC103V max;VR64V;BV78.6V max at 1.0mA;Temp 175°C max Oper
65	LC70	6	Si	DO13	VC125V max;VR70V;BV95.1V max at 1.0mA;Temp 175°C max Oper
66	LC70A	6	Si	DO13	VC113V max;VR70V;BV86V max at 1.0mA;Temp 175°C max Oper
67	LC75	6	Si	DO13	VC 134V max;VR 75V;BV 102V maxat 1.0mA; Temp 175°C max Oper
68	LC75A	6	Si	DO13	VC 121V max;VR 75V;BV 92.1V max at 1.0mA; Temp 175°C max Oper
69	LC80	6	Si	DO13	VC 142V max;VR 80V;BV 108V maxat 1.0mA;Temp 175°C max Oper
70	LC80A	6	Si	DO13	VC 129V max;VR 80V:BV 98V max at 1.0mA;Temp 175°C max Oper
71	LC90	6	Si	DO13	VC 160V max;VR 90V; BV 122V max at 1.0mA;Temp 175°C max Oper
72	LC90A	6	Si	DO13	VC 146V max;VR 90V;BV 111V maxat 1.0mA; Temp 175°C max Oper
73	LC100	6	Si	DO13	VC 179V max;VR 100V;BV 136V max at 1.0mA;Temp 175°C max Oper
74	LC100A	6	Si	DO13	VC 162V max;VR 100V;BV 123V max at 1.0mA;Temp 175°C max Oper
75	LC110	6	Si	DO13	VC 196V max;VR 110V;BV 149V max at 1.0mA;Temp 175°C max Oper
76	LC110A	6	Si	DO13	VC 178V max;VR 110V;BV 135V max at 1.0mA;Temp 175°C max Oper
77	LC120	6	Si	DO13	VC 214V max;VR 120V;BV 163V max at 1.0mA;Temp 175°C max Oper
78	LC120A	6	Si	DO13	VC 193V max;VR 120V;BV 147V max at 1.0mA;Temp 175°C max Oper
79	LC130	6	Si	DO13	VC 231Vmax;VR 130V;BV 176Vmax at 1.0mA;Temp 175°C max Oper
80	LC130A	6	Si	DO13	VC 209Vmax;VR 130V;BV 159Vmax at 1.0mA;Temp 175°C max Oper
81	LC150	6	Si	DO13	VC 268Vmax;VR 150V;BV 204Vmax at 1.0mA;Temp 175°C max Oper
82	LC150A	6	Si	DO13	VC 243Vmax;VR 150V;BV 185Vmax at 1.0mA;Temp 175°C max Oper
83	LC160	6	Si	DO13	VC 287V max; VR 160V; BV 218 V max at 1.0mA; Temp 175°C max Oper
84	LC160A	6	Si	DO13	VC 259V max; VR160V; BV 197V max at 1.0mA; Temp 175°C max Oper
85	LC170	6	Si	DO13	VC 304V max; VR 170V; BV 231V max at 1.0mA; Temp 175°C max Oper
86	LC170A	6	Si	DO13	VC 1275Vmax;VR 170V;BV 209Vmax at 1.0mA;Temp 175°C max Oper
87	LCC2	6	Si	A69ak	Bipolar Junction Type Suppressor;VBR 1.33V at 10mA;VR.80V;IR 10uAmax;C 517pfmax at 0V,1.0MHz
88	LCC3	6	Si	A69ak	Bipolar Junction Type Suppressor;VBR 2.0V at 10mA;VR1.2V;IR 10uAmax;C 319pf max at 0V,1.0MHz
89	LCC4	6	Si	A69ak	Bipolar Junction Type Suppressor;VBR 2.7V at 10mA;VR1.6V;IR 10uAmax;C 259pf max at 0V,1.0MHz
90	LCC5	6	Si	A69ak	Bipolar Junction Type Suppressor;VBR 3.3V at 10mA;VR2.0V;IR 10uAmax;C 191pf max at 0V,1.0MHz
91	LCC6	6	Si	A69ak	Bipolar Junction Type Suppressor;VBR 4.0V at 10mA;VR2.4V;IR 10uAmax;C 159pf max at 0V,1.0MHz
92	LCC7	6	Si	A69ak	Bipolar Junction Type Suppressor;VBR 4.7V at 10mA;VR2.8V;IR 10uAmax;C 140pf max at 0V,1.0MHz
93	LCC8	6	Si	A69ak	Bipolar Junction Type Suppressor;VBR 5.4V at 10mA;VR3.2V;IR 10uAmax;C 130pf max at 0V,1.0MHz
94	LCC9	6	Si	A69ak	Bipolar Junction Type Suppressor;VBR 6.0V at 10mA;VR3.6V;IR 10uAmax;C 114pf max at 0V,1.0MHz
95	LCC10	6	Si	A69ak	Bipolar Junction Type Suppressor;VBR 6.7V at 10mA;VR4.0V;IR 10uAmax;C 102pf max at 0V,1.0MHz
96	LCC11	6	Si	A69ak	Bipolar Junction Type Suppressor;VBR 7.3V at 10mA;VR4.4V;IR 10uAmax;C 93pf max at 0V,1.0MHz
97	LCC12	6	Si	A69ak	Bipolar Junction Type Suppressor;VBR 8.0V at 10mA;VR4.8V;IR 10uAmax;C 86pf max at 0V,1.0MHz
98	LCC13	6	Si	A69ak	Bipolar Junction Type Suppressor;VBR 8.7V at 10mA;VR5.2V;IR 10uAmax;C 79pf max at 0V,1.0MHz
99	LCC14	6	Si	A69ak	Bipolar Junction Type Suppressor;VBR 9.4V at 10mA;VR5.6V;IR 10uAmax;C 74pf max at 0V,1.0MHz
100	LCC15	6	Si	A69ak	Bipolar Junction Type Suppressor;VBR 10V at 10mA;VR 6.0V;IR 10uAmax;C 67pf max at 0V,1.0MHz
101	LCC16	6	Si	A69ak	Bipolar Junction Type Suppressor;VBR 10.7V at 10mA;VR6.4V;IR 10uAmax;C 62pf max at 0V,1.0MHz
102	LCE6.5	6	Si	A298ar	VC12.3V;VR6.5V;BV8.82Vmin;IR1.0mAmax;Temp 175°C max Oper
103	LCE6.5A	6	Si	A298ar	VC11.2V;VR6.5V;BV7.98Vmin;IR1.0mAmax;Temp 175°C max Oper
104	LCE7.0	6	Si	A298ar	VC13.3V;VR7.0V;BV9.51Vmin;IR500uAmax;Temp 175°C max Oper
105	LCE7.0A	6	Si	A298ar	VC12V;VR7.0V;BV8.60Vmin;IR500 uA max;Temp 175°Cmax Oper
106	LCE7.5	6	Si	A298ar	VC 14.3V;VR7.5V;BV10.2Vmin;IR 250uA max;Temp 175°Cmax Oper
107	LCE7.5A	6	Si	A298ar	VC12.9V;VR7.5V;BV9.21Vmin;IR 250 uA max;Temp 175°C max Oper
108	LCE8.0	6	Si	A298ar	VC15V;VR8.0V;BV10.9Vmin;IR100 uA max;Temp 175°C max Oper
109	LCE8.0A	6	Si	A298ar	VC13.6V;VR8.0V;BV9.83Vmin;IR 100uA max;Temp 175°C max Oper
110	LCE8.5	6	Si	A298ar	VC 15.9V max; VR 8.5V; BV 11.5V max; IR 50uA max; Temp 175°C max Oper

IN ORDER OF (1) TYPE (2) MAT AND (3) TYPE NO.

LINE No.	3 TYPE NUMBER	1 TYPE	2 MAT.	DWG. NO.	DESCRIPTION
1	LCE8.5A	6	Si	A298ar	VC 14.4V max; VR 8.5V; BV 10.4V max IR 50uA max; Temp 175°C max Oper
2	LCE9.0	6	Si	A298ar	VC 16.9V max; VR 9.0V; BV 12.2V max; IR 10uA max; Temp 175°C max Oper
3	LCE9.0A	6	Si	A298ar	VC 15.4V max; VR 9.0V; BV 11.1V max; IR 10uA max; Temp 175°C max Oper
4	LCE10	6	Si	A298ar	VC 18.8V max; VR 10V; BV 13.6V max; IR 5.0uA max; Temp 175°C max Oper
5	LCE10A	6	Si	A298ar	VC 17V max; VR 10V; BV 12.3V max; IR 5.0uA max; Temp 175°C max Oper
6	LCE11	6	Si	A298ar	VC 20.1V max; VR 11V; BV 14.9V max; IR 50uA max; Temp 175°C max Oper
7	LCE11A	6	Si	A298ar	VC 18.2V max; VR 11V; BV 13.5V max; IR 5.0uA max; Temp 175°C max Oper
8	LCE12	6	Si	A298ar	VC 22V max; VR 12V; BV 16.3V max; IR 5.0uA max; Temp 175°C max Oper
9	LCE12A	6	Si	A298ar	VC 19.9V max; VR 12V; BV 14.7V max; IR 5.0uA max; Temp 175°C max Oper
10	LCE13	6	Si	A298ar	VC 23.8V max; VR 13V; BV 17.6V max; IR 5.0uA max; Temp 175°C max Oper
11	LCE13A	6	Si	A298ar	VC 21.5V max; VR 13V; BV 15.9V max; IR 5.0uA max; Temp 175°C max Oper
12	LCE14	6	Si	A298ar	VC 25.8V max;VR 14V;BV 19.1V max;IR 5.0uA max;Temp 175°C max Oper.
13	LCE14A	6	Si	A298ar	VC23.2Vmax;VR14V;BV7.2Vmax;IR5.0uAmax;Temp 175°C max Oper
14	LCE15	6	Si	A298ar	VC 26.9V max;VR 15V;BV 20.4V max;IR 5.0uA max;Temp 175°C max Oper.
15	LCE15A	6	Si	A298ar	VC 24.4V max;VR 15V;BV 18.5V max;IR 5.0uA max;Temp 175°C max Oper.
16	LCE16	6	Si	A298ar	VC 28.8V max;VR 16V;BV 21.8V max;IR 5.0uA max;Temp 175°C max Oper.
17	LCE16A	6	Si	A298ar	VC 26V max;VR 16V;BV 19.7V max;IR 5.0uA max;Temp 175°C max Oper.
18	LCE17	6	Si	A298ar	VC 30.5V max;VR 17V;BV 23.1V max;IR 5.0uA max;Temp 175°C max Oper.
19	LCE17A	6	Si	A298ar	VC 27.6V max;VR 17V;BV 20.9V max;IR 5.0uA max;Temp 175°C max Oper.
20	LCE18	6	Si	A298ar	VC 32.2V max;VR 18V;BV 24.4V max;IR 5.0uA max;Temp 175°C max Oper.
21	LCE18A	6	Si	A298ar	VC 29.2V max;VR 18V;BV 22.1V max;IR 5.0uA max;Temp 175°C max Oper.
22	LCE20	6	Si	A298ar	VC 35.8V max;VR 20V;BV 27.1V max;IR 5.0uA max;Temp 175°C max Oper.
23	LCE20A	6	Si	A298ar	VC 32.4V max;VR 20V;BV 24.5V max;IR 5.0uA max;Temp 175°C max Oper.
24	LCE22	6	Si	A298ar	VC39.4Vmax;VR22V;BV29.8Vmax;IR 5.0uAmax; Temp 175°C max Oper
25	LCE22A	6	Si	A298ar	VC35.5V max; VR22V;BV26.9V max; IR5.0uA max; Temp 175°C max Oper
26	LCE24	6	Si	A298ar	VC 43V max; VR24V; BV 32.6Vmax; IR 5.0uA max; Temp 175°Cmax Oper
27	LCE24A	6	Si	A298ar	VC38.9V max;VR24V;BV29.5V max;IR5.0uAmax;Temp 175°C max Oper
28	LCE26	6	Si	A298ar	VC46.6V max;VR26V;BV35.3V max;IR 5.0uA max;Temp 175°C max Oper
29	LCE26A	6	Si	A298ar	VC42.1V max;VR26V;BV31.9V max; IR 5.0uA max; Temp 175°C max Oper
30	LCE28	6	Si	A298ar	VC50.1V max; VR28V; BV38V max; IR 5.0uA max; Temp 175°C Oper
31	LCE28A	6	Si	A298ar	VC45.4V max; VR 28V; BV34.4V max; IR 5.0uA max; Temp 175°C Oper
32	LCE30	6	Si	A298ar	VC53.5V max; VR 30V; BV40.7V max; IR 5.0uA max; Temp 175° C max Oper
33	LCE30A	6	Si	A298ar	VC 48.4V max; VR 30V; BV 36.8 V max; IR 5.0uA max; Temp 175 °C max Oper
34	LCE33	6	Si	A298ar	VC 59V max; VR33V; BV 44.9Vmax ; IR 5.0uA max; Temp 175°Cmax Oper
35	LCE33A	6	Si	A298ar	VC53.3V max; VR33V; BV40.6Vmax ; IR 5.0uA max; Temp 175°Cmax Oper
36	LCE36	6	Si	A298ar	VC 64.3V max;VR 36V; BV 48.9V max; IR 5.0uA max; Temp 175°C max Oper
37	LCE36A	6	Si	A298ar	VC 58.1V max; VR36V; BV 44.2V max;IR 5.0uA max; Temp 175°C max Oper
38	LCE40	6	Si	A298ar	VC 71.4V max; VR 40V; BV 54.3V max; IR 5.0uA max; Temp 175°C max Oper
39	LCE40A	6	Si	A298ar	VC64.5V max;VR40V;BV49.1V max;IR5.0uA max;Temp 175°C max Oper
40	LCE43	6	Si	A298ar	VC76.7V max; VR43V; BV 58.4V max; IR 5.0uA max; Temp 175°C max Oper
41	LCE43A	6	Si	A298ar	VC69.4 V max; VR 43V; BV 52.8V max; IR 5.0uA max; Temp 175°C max Oper
42	LCE45	6	Si	A298ar	VC 80.3V max; VR 45V; BV 61.1V max; IR 5.0uA max; Temp 175°C max Oper
43	LCE45A	6	Si	A298ar	VC 72.7V max; VR 45V; BV 55.3V max; IR 5.0uA max; Temp 175°C max Oper
44	LCE48	6	Si	A298ar	VC 85.5 Vmax; VR 48V; BV 65.1V max; IR 5.0uA max; Temp 175°C max Oper
45	LCE48A	6	Si	A298ar	VC 77.4V max; VR48V; BV 58.9V max; IR 5.0uA max; Temp 175°C max Oper
46	LCE51	6	Si	A298ar	VC 91.1V max; VR 51V; BV 69.3V max; IR 5.0uA max; Temp 175°C max Oper
47	LCE51A	6	Si	A298ar	VC 82.4V max; VR 51V; BV 62.7V max; IR 5.0uA max; Temp 175°C max Oper
48	LCE54	6	Si	A298ar	VC 96.3V max;VR 54V;BV 73.3V max;IR 5.0uA max;Temp 175°C max Oper.
49	LCE54A	6	Si	A298ar	VC 87.1V max;VR 54V;BV 66.3V max;IR 5.0uA max;Temp 175°C max Oper.
50	LCE58	6	Si	A298ar	VC 103V max;VR 58V;BV 78.7V max;IR 5.0uA max;Temp 175°C max Oper.
51	LCE58A	6	Si	A298ar	VC 93.6V max;VR 58V;BV 71.2V max;IR 5.0uA max;Temp 175°C max Oper.
52	LCE60	6	Si	A298ar	VC 107V max;VR 60V;BV 81.5V max;IR 5.0uA max;Temp 175°C max Oper.
53	LCE60A	6	Si	A298ar	VC 96.8V max;VR 60V;BV 73.7V max;IR 5.0uA max;Temp 175°C max Oper.
54	LCE64	6	Si	A298ar	VC 114V max;VR 64V;BV 86.9V max;IR 5.0uA max;Temp 175°C max Oper.
55	LCE64A	6	Si	A298ar	VC 103V max;VR 64V;BV 78.6V max;IR 5.0uA max;Temp 175°C max Oper.
56	LCE70	6	Si	A298ar	VC 125V max;VR 70V;BV 95.1V max;IR 5.0uA max;Temp 175°C max Oper.
57	LCE70A	6	Si	A298ar	VC 113V max;VR 70V;BV 86V max;IR 5.0uA max;Temp 175°C max Oper.
58	LCE75	6	Si	A298ar	VC 134V max;VR 75V;BV 102V max;IR 5.0uA max;Temp 175°C max Oper.
59	LCE75A	6	Si	A298ar	VC 121V max;VR 75V;BV 92.1V max;IR 5.0uA max;Temp 175°C max Oper.
60	LCE80	6	Si	A298ar	VC 142V max;VR 80V;BV 108V max;IR 5.0uA max;Temp 175°C max Oper
61	LCE80A	6	Si	A298ar	VC 129V max;VR 80V;BV 98V max;IR 5.0uA max;Temp 175°C max Oper
62	LCE90	6	Si	A298ar	VC 160V max;VR 90V;BV 122V max;IT 5.0uA max;Temp 175°C max Oper
63	LCE90A	6	Si	A298ar	VC 146V max;VR 90V;BV 111V max;IR 5.0uA max; Temp 175°C max Oper
64	LCE100	6	Si	A298ar	VC 179V max;VR 100V;BV 136V max;IR 5.0uA max;Temp 175°C max Oper
65	LCE100A	6	Si	A298ar	VC 162V max;VR 100V;BV 123V max IR 5.0uA max;Temp 175°C max Oper
66	LCE110	6	Si	A298ar	VC 196V max;VR 110V;BV 149V max;IR 5.0uA max Temp 175°C max Oper
67	LCE110A	6	Si	A298ar	VC 178V max;VR 110V;BV 135V max;IR 5.0uA max;Temp 175°C max Oper.
68	LCE120	6	Si	A298ar	VC 214V max;VR 120V;BV 163V max;IR 5.0uA max;Temp 175°C max Oper.
69	LCE120A	6	Si	A298ar	VC 193V max;VR 120V;BV 147V max;IR 5.0uA max;Temp 175°C max Oper.
70	LCE130	6	Si	A298ar	VC 231V max;VR 130V;BV 176V max;IR 5.0uA max;Temp 175°C max Oper.
71	LCE130A	6	Si	A298ar	VC 209V max;VR 130V;BV 159V max;IR 5.0uA max;Temp 175°C max Oper.
72	LCE150	6	Si	A298ar	VC 268V max;VR 150V;BV 204V max;IR 5.0uA max;Temp 175°C max Oper.
73	LCE150A	6	Si	A298ar	VC 243V max;VR 150V;BV 185V max;IR 5.0uA max;Temp 175°C max Oper.
74	LCE160	6	Si	A298ar	VC 287V max;VR 160V;BV 218V max;IR 5.0uA max;Temp 175°C max Oper.
75	LCE160A	6	Si	A298ar	VC 259V max;VR 160V;BV 197V max;IR 5.0uA max;Temp 175°C max Oper.
76	LCE170	6	Si	A298ar	VC 304V max;VR 170V;BV 231V max;IR 5.0uA max;Temp 175°C max Oper.
77	LCE170A	6	Si	A298ar	VC 275V max;VR 170V;BV 209V max;IR 5.0uA max;Temp 175°C max Oper.
78	MDA220	6	Si	M999	Secondary Transient Protector For Use in Telephone Subscriber Circuits.
79	ML8.2A	6	Si	A356	VBR 7.38-9.02Vdc;IT 150mAdc;IL 20uAdc;VSM 11.9Vp;ISM 44Ap;VM 6.1Vdc
80	ML10A	6	Si	A356	VBR9.0-11.0Vdc;IT125mAdc;IL5.0uAdc;VSM14.0Vp;ISM35.7Ap;VM7.6Vdc
81	ML20A	6	Si	A356	VBR18.0-22.0Vdc;IT65mAdc;IL1.0uAdc;VSM22.9Vp;ISM17.9Ap;VM15.2Vdc
82	ML30A	6	Si	A356	VBR27.0-33.0Vdc;IT40mAdc;IL1.0uAdc;VSM41.9Vp;ISM11.9Ap;VM22.8Vdc
83	ML39A	6	Si	A356	VBR35.1-42.9Vdc;IT30mAdc;IL1.0uAdc;VSM54.5Vp;ISM9.2Ap,VM29.7Vdc
84	ML51A	6	Si	A356	VBR45.9-56.1Vdc;IT25mAdc;IL1.0uAdc;VSM71.2Vp;ISM7.0Ap;VM38.8Vdc
85	ML60A	6	Si	A356	VBR54.0-66.0Vdc;IT20mAdc;IL1.0uAdc;VSM82.8Vp;ISM6.0Ap;VM47.1Vdc
86	ML82A	6	Si	A356	VBR73.8-90.2Vdc;IT15mAdc;IL1.0uAdc;VSM119.5Vp;ISM4.4Ap;VM62.2Vdc
87	ML100A	6	Si	A356	VBR90.0-110.0Vdc;IT12mAdc;IL1.0uAdc;VSM139.7Vp;ISM3.6Ap;VM76.0Vdc
88	ML110A	6	Si	A356	VBR 99.0-121Vdc;IT 10mAdc;IL 1.0uAdc;VSM 167.6Vp;ISM 3.0Ap;VM 91.2Vdc
89	MPT5	6	Si	DO13▾	VR 5V;VB 6.0Vmin at 1.0mA;IR 300uAmax;Vf 3.5Vmax at 100A;IPP 160Amax
90	MPT8	6	Si	DO13▾	VR 8V;VB 9.4Vmin at 1.0mA;IR 25uAmax;Vf 3.5Vmax at 100A;IPP 100Amax
91	MPT8C	6	Si	DO13	VC 11.4V max;VR 8.0V;BV 9.4V min at 1.0mA;Temp 175°C max Oper.
92	MPT10	6	Si	DO13▾	VR 10V;VB 11.7Vmin at 1.0mA;IR 2.0uAmax;Vf 3.5Vmax at 100A;IPP90Amax
93	MPT10C	6	Si	DO13	VC 14.1V max;VR 10V;BV 11.7V min at 1.0mA;Temp 175°C max Oper.
94	MPT12	6	Si	DO13▾	VR 12V;VB 14.1Vmin at 1.0mA;IR 2.0uAmax;Vf 3.5Vmax at 100A;IPP 70Amax
95	MPT12C	6	Si	DO13	VC 16.7V max;VR 12V;BV 14.1V min at 1.0mA;Temp 175°C max Oper.
96	MPT15	6	Si	DO13▾	VR 15V;VB 17.6Vmin at 1.0mA;IR *-#UAmax;Vf 3.5Vmax at 100A;IPP 60Amax
97	MPT15C	6	Si	DO13	VC 20.8V max;VR 15V;BV 17.6V min at 1.0mA;Temp 175°C max Oper.
98	MPT18	6	Si	DO13▾	VR 18V;VB 21.2Vmin at 1.0mA;IR 2.0uAmax;Vf 3.5Vmax at 100A;IPP 50Amax
99	MPT18C	6	Si	DO13	VC 24.8V max;VR 18V;BV 21.2V min at 1.0mA;Temp 175°C max Oper.
100	MPT22	6	Si	DO13▾	VR 22V;VB 25.9Vmin at 1.0mA;IR 2.0uAmax;Vf 3.5Vmax at 100A;IPP 40Amax
101	MPT22C	6	Si	DO13	VC 30.8V max;VR 22V;BV 25.9V min at 1.0mA;Temp 175°C max Oper.
102	MPT36	6	Si	DO13▾	VR 36V;VB 42.4Vmin at 1.0mA;IR 2.0uAmax;Vf 3.5Vmax at 100A;IPP 23Amax
103	MPT36C	6	Si	DO13	VC 50.6V max;VR 36V;BV 42.4V min at 1.0mA;Temp 175°C max Oper.
104	MPT45	6	Si	DO13▾	VR 45V;VB 52.9Vmin at 1.0mA;IR 2.0uAmax;Vf 3.5Vmax at 100A;IPP 19Amax
105	MPT45C	6	Si	DO13	VC 63.3V max;VR 45V;BV 52.9V min at 1.0mA;Temp 175°C max Oper.
106	MPTE5	6	Si	A298ar	IR 300uA at 5.0VRWM;6.0V(BR) min at IR 1.0mA;9.4V(CL) at Ipp 160A
107	MPTE5C	6	Si	A298ar	IR 300uA at 5.0VRWM;6.0V(BR) min at IR 1.0mA;9.4V(CL) at Ipp 160A
108	MPTE8	6	Si	A298ar	IR 25uA at 8.0VRWM;9.4V(BR) min at IR 1.0mA;15.0V(CL) at Ipp 100A
109	MPTE8C	6	Si	A298ar	IR 25uA at 8.0VRWM;9.4V(BR) min at IR 1.0mA;15.0V(CL) at Ipp 100A
110	MPTE10	6	Si	A298ar	IR 2.0uA at 10VRWM;11.7V(BR) min at IR 1.0mA;16.7V(CL) at Ipp 90A

7. TRANSIENT SUPPRESSOR DIODES - Bipolar & Unipolar Types (Cont'd)

IN ORDER OF (1) TYPE (2) MAT AND (3) TYPE NO.

LINE No.	3 TYPE NUMBER	1 TYPE	2 MAT.	DWG. NO.	DESCRIPTION
1	MPTE10C	6	Si	A298ar	IR 2.0uA at 10VRWM;11.7V(BR) min at IR 1.0mA;16.7V(CL) at Ipp 90A
2	MPTE12	6	Si	A298ar	IR 2.0uA at 12VRWM;14.1V(BR) min at IR 1.0mA;21.2V(CL) at Ipp 70A
3	MPTE12C	6	Si	A298ar	IR 2.0uA at 12VRWM;14.1V(BR) min at IR 1.0mA;21.2V(CL) at Ipp 70A
4	MPTE15	6	Si	A298ar	IR 2.0uA at 15VRWM;17.6V(BR) min at IR 1.0mA;25.0V(CL) at Ipp 60A
5	MPTE15C	6	Si	A298ar	IR 2.0uA at 15VRWM;17.6V(BR) min at IR 1.0mA;25.0V(CL) at Ipp 60A
6	MPTE18	6	Si	A298ar	IR 2.0uA at 18VRWM;21.2V(BR) min at IR 1.0mA;30.0V(CL) at Ipp 50A
7	MPTE18C	6	Si	A298ar	IR 2.0uA at 18VRWM;21.2V(BR) min at IR 1.0mA;30.0V(CL) at Ipp 50A
8	MPTE22	6	Si	A298ar	IR 2.0uA at 22VRWM;25.9V(BR) min at IR 1.0mA;37.5V(CL) at Ipp 40A
9	MPTE22C	6	Si	A298ar	IR 2.0uA at 22VRWM;25.9V(BR) min at IR 1.0mA;37.5V(CL) at Ipp 40A
10	MPTE36	6	Si	A298ar	IR 2.0uA at 36VRWM;42.4V(BR) min at IR 1.0mA;65.2V(CL) at Ipp 23A
11	MPTE36C	6	Si	A298ar	IR 2.0uA at 36VRWM;42.4V(BR) min at IR 1.0mA;65.2V(CL) at Ipp 23A
12	MPTE45	6	Si	A69g▼	IR 2.0uA at 45VRWM;52.9V(BR) min at IR 1.0mA;78.9V(CL) at Ipp 19A
13	MPTE45C	6	Si	A298ar	IR 2.0uA at 45VRWM;52.9V(BR) min at IR 1.0mA;78.9V(CL) at Ipp 19A
14	MPZ5-16A	6	Si	M426	Power Transient Suppressor;Pd-350W;Vop(Pk)-14V typ;Vop(Rms)-10.
15	MPZ5-16B	6	Si	M426	Power Transient Suppressor;Pd-350W;Vop(Pk)-14V typ;Vop(Rms)-10.
16	MPZ5-32A	6	Si	M426	Power Transient Suppressor;Pd 350W;Vop(Pk) 28V typ;Vop(Rms) 20.
17	MPZ5-32B	6	Si	M426	Power Transient Suppressor;Pd-350W;Vop(Pk)-28V typ;Vop(Rms)-20.
18	MPZ5-32C	6	Si	M426	Power Transient Suppressor;Pd-350W;Vop(Pk)-28V typ;Vop(Rms)-20.
19	MPZ5-180A	6	Si	M426	Power Transient Suppressor;Pd-350W;Vop(Pk)-165V typ;Vop(Rms)-117.
20	MPZ5-180B	6	Si	M426	Power Transient Suppressor;Pd-350W;Vop(Pk)-165V typ;Vop(Rms)-117.
21	MPZ5-180C	6	Si	M426	Power Transient Suppressor;Pd-350W;Vop(Pk)-165V typ;Vop(Rms)-117.
22	P6KE6.8	6	Si	A1ee	IR 1.0mA at 5.50VRWM;7.48V(BR) max at IR 10mA;10.8V(CL) at Ipp 56A
23	P6KE6.8A	6	Si	A1ee	IR 1.0mA at 5.80VRWM;7.14V(BR) max at IR 10mA;10.5V(CL) at Ipp 57A
24	P6KE7.5	6	Si	A1ee	IR 500uA at 6.05VRWM;8.25V(BR) max at IR 10mA;11.7V(CL) at Ipp 51A
25	P6KE7.5A	6	Si	A1ee	IR 500uA at 6.40VRWM;7.88V(BR) max at IR 10mA;11.3V(CL) at Ipp 53A
26	P6KE7.5C	6	Si	A398f	VC 11.7V max; VR 6.05V; BV 8.25 V max at 10 mA; Temp 175°C max Oper
27	P6KE8.2	6	Si	A1ee	IR 200uA at 6.63VRWM;9.02V(BR) max at IR 10mA;12.5V(CL) at Ipp 48A
28	P6KE8.2A	6	Si	A1ee	IR 200uA at 7.02VRWM;8.61V(BR) max at IR 10mA;12.1V(CL) at Ipp 50A
29	P6KE8.2C	6	Si	A398f	VC 12.5 V max; VR 6.63V; BV9.02 V max at 1.0 mA; Temp 175°C max Oper
30	P6KE9.1	6	Si	A1ee	IR 50uA at 7.37VRWM;10.0V(BR) max at IR 1.0mA;13.8V(CL) at Ipp 44A
31	P6KE9.1A	6	Si	A1ee	IR 50uA at 7.78VRWM;9.55V(BR) max at IR 1.0mA;13.4V(CL) at Ipp 45A
32	P6KE9.1C	6	Si	A398f	VC 13.8V max;VR 7.3V;BV 10V max at 1.0mA;Temp 175°C max Oper
33	P6KE9.1CA	6	Si	A398f	VC 13.4V max;VR 7.78V;BV 9.55Vmax at 1.0mA;Temp 175°C max Oper
34	P6KE10	6	Si	A1ee	IR 10uA at 8.10VRWM;11.0V(BR) max at IR 1.0mA;15.0V(CL) at Ipp 40A
35	P6KE10A	6	Si	A1ee	IR 10uA at 8.55VRWM;10.5V(BR) max at IR 1.0mA;14.5V(CL) at Ipp 41A
36	P6KE10C	6	Si	A398f	VC 15V max;VR 8.10V;BV 11V maxat 1.0mA;Temp 175°C max Oper
37	P6KE10CA	6	Si	A398f	VC 14.5V max;VR 8.55V;BV 10.5Vmax at 1.0mA;Temp 175°C max Oper
38	P6KE11	6	Si	A1ee	IR 5.0uA at 8.92VRWM;12.1V(BR) max at IR 1.0mA;16.2V(CL) at Ipp 37A
39	P6KE11A	6	Si	A1ee	IR 5.0uA at 9.40VRWM;11.6V(BR) max at IR 1.0mA;15.6V(CL) at Ipp 38A
40	P6KE11C	6	Si	A398f	VC 16.2V max;VR 8.92V;BV 12.1Vmax at 1.0mA;Temp 175°C max Oper
41	P6KE11CA	6	Si	A398f	VC 15.6V max;VR 9.40V;BV 11.6Vmax at 1.0mA;Temp 175°C max Oper
42	P6KE12	6	Si	A1ee	IR 5.0uA at 9.72VRWM;13.2V(BR) max at IR 1.0mA;17.3V(CL) at Ipp 35A
43	P6KE12A	6	Si	A1ee	IR 5.0uA at 10.2VRWM;12.6V(BR) max at IR 1.0mA;16.7V(CL) at Ipp 36A
44	P6KE13	6	Si	A1ee	IR 5.0uA at 10.5VRWM;14.3V(BR) max at IR 1.0mA;19.0V(CL) at Ipp 32A
45	P6KE13A	6	Si	A1ee	IR 5.0uA at 11.1VRWM;13.7V(BR) max at IR 1.0mA;18.2V(CL) at Ipp 33A
46	P6KE15	6	Si	A1ee	IR 5.0uA at 12.1VRWM;16.5V(BR) max at IR 1.0mA;22.0V(CL) at Ipp 27A
47	P6KE15A	6	Si	A1ee	IR 5.0uA at 12.8VRWM;15.8V(BR) max at IR 1.0mA;21.2V(CL) at Ipp 28A
48	P6KE16	6	Si	A1ee	IR 5.0uA at 12.9VRWM;17.6V(BR) max at IR 1.0mA;23.5V(CL) at Ipp 26A
49	P6KE16A	6	Si	A1ee	IR 5.0uA at 13.6VRWM;16.8V(BR) max at IR 1.0mA;22.5V(CL) at Ipp 27A
50	P6KE18	6	Si	A1ee	IR 5.0uA at 14.5VRWM;19.8V(BR) max at IR 1.0mA;26.5V(CL) at Ipp 23A
51	P6KE18A	6	Si	A1ee	IR 5.0uA at 15.3VRWM;18.9V(BR) max at IR 1.0mA;25.2V(CL) at Ipp 24A
52	P6KE20	6	Si	A1ee	IR 5.0uA at 16.2VRWM;22.0V(BR) max at IR 1.0mA;29.1V(CL) at Ipp 21A
53	P6KE20A	6	Si	A1ee	IR 5.0uA at 17.1VRWM;21.0V(BR) max at IR 1.0mA;27.7V(CL) at Ipp 22A
54	P6KE22	6	Si	A1ee	IR 5.0uA at 17.8VRWM;24.2V(BR) max at IR 1.0mA;31.9V(CL) at Ipp 19A
55	P6KE22A	6	Si	A1ee	IR 5.0uA at 18.8VRWM;23.1V(BR) max at IR 1.0mA;30.6V(CL) at Ipp 20A
56	P6KE24	6	Si	A1ee	IR 5.0uA at 19.4VRWM;26.4V(BR) max at IR 1.0mA;34.7V(CL) at Ipp 17A
57	P6KE24A	6	Si	A1ee	IR 5.0uA at 20.5VRWM;25.2V(BR) max at IR 1.0mA;33.2V(CL) at Ipp 18A
58	P6KE27	6	Si	A1ee	IR 5.0uA at 21.8VRWM;29.7V(BR) max at IR 1.0mA;39.1V(CL) at Ipp 15A
59	P6KE27A	6	Si	A1ee	IR 5.0uA at 23.1VRWM;28.4V(BR) max at IR 1.0mA;37.5V(CL) at Ipp 16A
60	P6KE30	6	Si	A1ee	IR 5.0uA at 24.3VRWM;33.0V(BR) max at IR 1.0mA;43.5V(CL) at Ipp 14A
61	P6KE30A	6	Si	A1ee	IR 5.0uA at 25.6VRWM;31.5V(BR) max at IR 1.0mA;41.4V(CL) at Ipp 14.4A
62	P6KE33	6	Si	A1ee	IR 5.0uA at 26.8VRWM;36.3V(BR) max at IR 1.0mA;47.7V(CL) at Ipp 12.6A
63	P6KE33A	6	Si	A1ee	IR 5.0uA at 28.2VRWM;34.7V(BR) max at IR 1.0mA;45.7V(CL) at Ipp 13.2A
64	P6KE36	6	Si	A1ee	IR 5.0uA at 29.1VRWM;39.6V(BR) max to IR 1.0mA;52.0V(CL) at Ipp 11.6A
65	P6KE36A	6	Si	A1ee	IR 5.0uA at 30.8VRWM;37.8V(BR) max to IR 1.0mA;49.9V(CL) at Ipp 12A
66	P6KE39	6	Si	A1ee	IR 5.0uA at 31.6VRWM;42.9V(BR) max to IR 1.0mA;56.4V(CL) at Ipp 10.6A
67	P6KE39A	6	Si	A1ee	IR 5.0uA at 33.3VRWM;41.0V(BR) max to IR 1.0mA;53.9V(CL) at Ipp 11.2A
68	P6KE43	6	Si	A1ee	IR 5.0uA at 34.8VRWM;47.3V(BR) max to IR 1.0mA;61.9V(CL) at Ipp 9.6A
69	P6KE43A	6	Si	A1ee	IR 5.0uA at 36.8VRWM;45.2V(BR) max to IR 1.0mA;59.3V(CL) at Ipp 10.1A
70	P6KE47	6	Si	A1ee	IR 5.0uA at 38.1VRWM;51.7V(BR) max to IR 1.0mA;67.8V(CL) at Ipp 8.9A
71	P6KE47A	6	Si	A1ee	IR 5.0uA at 40.2VRWM;49.4V(BR) max to IR 1.0mA;64.8V(CL) at Ipp 9.3A
72	P6KE51	6	Si	A1ee	IR 5.0uA at 41.3VRWM;56.1V(BR) max to IR 1.0mA;73.5V(CL) at Ipp 8.2A
73	P6KE51A	6	Si	A1ee	IR 5.0uA at 43.6VRWM;53.6V(BR) max to IR 1.0mA;70.1V(CL) at Ipp 8.6A
74	P6KE56	6	Si	A1ee	IR 5.0uA at 45.4VRWM;61.6V(BR) max to IR 1.0mA;80.5V(CL) at Ipp 7.4A
75	P6KE56A	6	Si	A1ee	IR 5.0uA at 47.8VRWM;58.8V(BR) max to IR 1.0mA;77.0V(CL) at Ipp 7.8A
76♦	P6KE62	6	Si	A1ee	Ir 5.0uA at 50.2 VRWM;68.2 V(RR) max at IR 1.0mA;89.0 V(CL) at Ipp 6.8A
77♦	P6KE62A	6	Si	A1ee	Ir 5.0uA at 53.0 VRWM;65.1 V(BR) max at IR 1.0mA;85.0 V(CL) at Ipp 7.1A
78♦	P6KE68	6	Si	A1ee	Ir 5.0uA at 55.1 VRWM;74.8 V(BR) max at IR 1.0mA;98.0 V(CL) at Ipp 6.1A
79♦	P6KE68A	6	Si	A1ee	Ir 5.0uA at 58.1 VRWM;71.4 V(BR) max at IR 1.0mA;92.0 V(CL) at Ipp 6.5A
80♦	P6KE75	6	Si	A1ee	Ir 5.0uA at 60.7 VRWM;82.5 V(BR) max at IR 1.0mA;108.0 V(CL) at Ipp 5.5A
81♦	P6KE75A	6	Si	A1ee	Ir 5.0uA at 64.1 VRWM;78.8 V(BR) max at IR 1.0mA;103.0 V(CL) at Ipp 5.8A
82♦	P6KE82	6	Si	Alee	IR 5.0uA at 66.4 VRWM: 90.2 V(BR) max at Ir 1.0mA;118.0 V(CL) at Ipp 5.1A
83♦	P6KE82A	6	Si	Alee	IR 5.0uA at 70.1 VRWM: 86.1 V(BR) max at Ir 1.0mA;113.0 V(CL) at Ipp 5.3A
84♦	P6KE91	6	Si	Alee	IR 5.0uA at 73.7 VRWM: 100.0 V(BR) max at IR 1.0mA; 131.0 V(CL) at Ipp 4.8A
85♦	P6KE91A	6	Si	A1ee	IR 5.0uA at 77.8 VRWM;95.50V(BR) max at IR 1.0mA;125.0 V(CL) at Ipp 4.8A
86♦	P6KE100	6	Si	A1ee	IR 5.0uA at 81.0 VRWM;110.0V(BR) max at IR 1.0mA;144.0 V(CL) at Ipp 4.2A
87♦	P6KE100A	6	Si	Alee	IR 5.0uA at 85.5 VRWM: 105.0 V(BR) max at IR 1.0mA; 137.0 V(CL) at Ipp 4.4A
88	P6KE110	6	Si	A1ee	IR 5.0uA at 89.2VRWM;121V(BR) max at IR 1.0mA;158.0V(CL) at Ipp 3.8A
89	P6KE110A	6	Si	A1ee	IR 5.0uA at 94.0VRWM;116V(BR) max at IR 1.0mA;152.0V(CL) at Ipp 4.0A
90	P6KE120	6	Si	A1ee	IR 5.0uA at 97.2VRWM;132V(BR) max at IR 1.0mA;173.0V(CL) at Ipp 3.5A
91	P6KE120A	6	Si	A1ee	IR 5.0uA at 102.0VRWM;126V(BR) max at IR 1.0mA;165.0V(CL) at Ipp 3.6A
92	P6KE130	6	Si	A1ee	IR 5.0uA at 105.0VRWM;143V(BR) max at IR 1.0mA;187.0V(CL) at Ipp 3.2A
93	P6KE130A	6	Si	A1ee	IR 5.0uA at 111.0VRWM;137V(BR) max at IR 1.0mA;179.0V(CL) at Ipp 3.3A
94	P6KE150	6	Si	A1ee	IR 5.0uA at 121.0VRWM;165V(BR) max at IR 1.0mA;215.0V(CL) at Ipp 2.8A
95	P6KE150A	6	Si	A1ee	IR 5.0uA at 128.0VRWM;158V(BR) max at IR 1.0mA;207.0V(CL) at Ipp 2.9A
96	P6KE160	6	Si	A1ee	IR 5.0uA at 130.0VRWM;176V(BR) max at IR 1.0mA;230.0V(CL) at Ipp 2.6A
97	P6KE160A	6	Si	A1ee	IR 5.0uA at 136.0VRWM;168V(BR) max at IR 1.0mA;219.0V(CL) at Ipp 2.7A
98	P6KE170	6	Si	A1ee	IR 5.0uA at 138.0VRWM;187V(BR) max at IR 1.0mA;244.0V(CL) at Ipp 2.5A
99	P6KE170A	6	Si	A1ee	IR 5.0uA at 145.0VRWM;179V(BR) max at IR 1.0mA;234.0V(CL) at Ipp 2.6A
100	P6KE180	6	Si	A1ee	IR 5.0uA at 146.0VRWM;198V(BR) max at IR 1.0mA;258.0V(CL) at Ipp 2.3A
101	P6KE180A	6	Si	A1ee	IR 5.0uA at 154.0VRWM;189V(BR) max at IR 1.0mA;246.0V(CL) at Ipp 2.4A
102	P6KE200	6	Si	A1ee	IR 5.0uA at 162.0VRWM;220V(BR) max at IR 1.0mA;287.0V(CL) at Ipp 2.1A
103	P6KE200A	6	Si	A1ee	IR 5.0uA at 171.0VRWM;210V(BR) max at IR 1.0mA;274.0V(CL) at Ipp 2.2A
104	P6SE6.8	6	Si	A1ts	Transient Suppressor;VR 5.5V;Clamping Volt 10.8V at Ipp 56A (1mSec)
105	P6SE6.8A	6	Si	A1ts	Transient Suppressor;VR 5.8V;Clamping Volt 10.5V at Ipp 57A (1mSec)
106	P6SE7.5	6	Si	A1ts	Transient Suppressor;VR 6.0V;Clamping Volt 11.7V at Ipp 51A (1mSec)
107	P6SE7.5A	6	Si	A1ts	Transient Suppressor;VR 6.4V;Clamping Volt 11.3V at Ipp 53A (1mSec)
108	P6SE8.2	6	Si	A1ts	Transient Suppressor;VR 6.6V;Clamping Volt 12.5V at Ipp 48A (1mSec)
109	P6SE8.2A	6	Si	A1ts	Transient Suppressor;VR 7.0V;Clamping Volt 12.1V at Ipp 50A (1mSec)
110	P6SE9.1	6	Si	A1ts	Transient Suppressor;VR 7.3V;Clamping Volt 13.8V at Ipp 44A (1mSec)

SYMBOLS AND CODES EXPLAINED IN INTERPRETER

7. TRANSIENT SUPPRESSOR DIODES - Bipolar & Unipolar Types (Cont'd)

IN ORDER OF (1) TYPE (2) MAT AND (3) TYPE NO.

LINE No.	3 TYPE NUMBER	1 TYPE	2 MAT.	DWG. NO.	DESCRIPTION
1	P6SE9.1A	6	Si	A1ts	Transient Suppressor;VR 7.7V;Clamping Volt 13.4V at Ipp 45A (1mSec)
2	P6SE10	6	Si	A1ts	Transient Suppressor;VR 8.1V;Clamping Volt 15V at Ipp 40A (1mSec)
3	P6SE10A	6	Si	A1ts	Transient Suppressor;VR 8.5V;Clamping Volt 14.5V at Ipp 41A (1mSec)
4	P6SE11	6	Si	A1ts	Transient Suppressor;VR 8.9V;Clamping Volt 16.2V at Ipp 37A (1mSec)
5	P6SE11A	6	Si	A1ts	Transient Suppressor;VR 9.4V;Clamping Volt 15.6V at Ipp 38A (1mSec)
6	P6SE12	6	Si	A1ts	Transient Suppressor;VR 9.72V;Clamping Volt 17.3V at Ipp 35A (1mSec)
7	P6SE12A	6	Si	A1ts	Transient Suppressor;VR 10.2V;Clamping Volt 16.7V at Ipp 36A (1mSec)
8	P6SE13	6	Si	A1ts	Transient Suppresor;VR 10.5V;Clamping Volt 19V at Ipp 32A (1mSec)
9	P6SE13A	6	Si	A1ts	Transient Suppressor;VR 11.1V;Clamping Volt 18.2V at Ipp 33A (1mSec)
10	P6SE15	6	Si	A1ts	Transient Suppressor;VR 12.1V;Clamping Volt 22V at Ipp 27A (1mSec)
11	P6SE15A	6	Si	A1ts	Transient Suppressor;VR 12.8V;Clamping Volt 21.2V at Ipp 28A (1mSec)
12	P6SE16	6	Si	A1ts	Transient Suppressor;VR 12.9V;Clamping Volt 23.5V at Ipp 26A (1mSec)
13	P6SE16A	6	Si	A1ts	Transient Suppressor;VR 13.6V;Clamping Volt 22.5V at Ipp 27A (1mSec)
14	P6SE18	6	Si	A1ts	Transient Suppressor;VR 14.5V;Clamping Volt 26.5V at Ipp 23A (1mSec)
15	P6SE18A	6	Si	A1ts	Transient Suppressor;VR 15.3V;Clamping Volt 25.2V at Ipp 24A (1mSec)
16	P6SE20	6	Si	A1ts	Transient Suppressor;VR 16.2V;Clamping Volt 29.1V at Ipp 21A (1mSec)
17	P6SE20A	6	Si	A1ts	Transient Suppressor;VR 17.1V;Clamping Volt 27.7V at Ipp 22A (1mSec)
18	P6SE22	6	Si	A1ts	Transient suppressor;VR 17.8V;Clamping volt 31.9V at Ipp 19A (1mSec)
19	P6SE22A	6	Si	A1ts	Transient suppressor;VR 18.8V;Clamping volt 30.6V at Ipp 20A(1mSec)
20	P6SE24	6	Si	A1ts	Transient suppressor;VR 19.4V;Clamping volt 34.7V at Ipp 17A(1mSec)
21	P6SE24A	6	Si	A1ts	Transient suppressor;VR 20.5V;Clamping volt 33.2V at Ipp 18A(1mSec)
22	P6SE27	6	Si	A1ts	Transient suppressor;VR 21.8V;Clamping volt 39.1V at Ipp 15A(1mSec)
23	P6SE27A	6	Si	A1ts	Transient suppressor;VR 23.1V;Clamping volt 37.5V at Ipp 16A(1mSec)
24	P6SE30	6	Si	A1ts	Transient suppressor;VR 24.3V;Clamping volt 43.5V at Ipp 14A(1mSec)
25	P6SE30A	6	Si	A1ts	Transient suppressor;VR 25.6V;Clamping volt 41.4V at Ipp 14.4A(1mSec)
26	P6SE33	6	Si	A1ts	Transient suppressor;VR 26.8V;Clamping volt 47.7V at Ipp 12.6A(1mSec)
27	P6SE33A	6	Si	A1ts	Transient suppressor;VR 28.2V;Clamping volt 45.7V at Ipp 13.2A(1mSec)
28	P6SE36	6	Si	A1ts	Transient suppressor;VR 29.1V;Clamping volt 52V at Ipp 11.3A(1mSec)
29	P6SE36A	6	Si	A1ts	Transient suppressor;VR 30.8V;Clamping volt 49.9V at Ipp 12A(1mSec)
30	P6SE39	6	Si	A1ts	Transient suppressor;VR 31.6V;Clamping volt 56.4V at Ipp 10.6A(1mSec)
31	P6SE39A	6	Si	A1ts	Transient suppressor;VR 33.3V;Clamping volt 53.9V at Ipp 11.2A(1mSec)
32	P6SE43	6	Si	A1ts	Transient suppressor;VR 34.8V;Clamping volt 61.9V at Ipp 9.6A(1mSec)
33	P6SE43A	6	Si	A1ts	Transient suppressor;VR 36.8V;Clamping volt 59.3V at Ipp 10.1A(1mSec)
34	P6SE47	6	Si	A1ts	Transient suppressor;VR 38.1V;Clamping volt 67.8V at Ipp 8.9A(1mSec)
35	P6SE47A	6	Si	A1ts	Transient suppressor;VR 40.2V;Clamping volt 64.8V at Ipp 9.3A(1mSec)
36	P6SE51	6	Si	A1ts	Transient suppressor;VR 41.3V;Clamping volt 73.5V at Ipp 8.2A(1mSec)
37	P6SE51A	6	Si	A1ts	Transient suppressor;VR 43.6V;Clamping volt 70.1V at Ipp 8.6A(1mSec)
38	P6SE56	6	Si	A1ts	Transient suppressor;VR 45.4V;Clamping volt 80.5V at Ipp 7.4A(1mSec)
39	P6SE56A	6	Si	A1ts	Transient suppressor;VR 47.8V;Clamping volt 77V at Ipp 7.8A(1mSec)
40	P6SE62	6	Si	A1ts	Transient suppressor;VR 50.2V;Clamping volt 89V at Ipp 6.8A(1mSec)
41	P6SE62A	6	Si	A1ts	Transient suppressor;VR 53V;Clamping volt 85V at Ipp 7.1A(1mSec)
42	P6SE68	6	Si	A1ts	Transient suppressor;VR 55.1V;Clamping volt 98V at Ipp 6.1A(1mSec)
43	P6SE68A	6	Si	A1ts	Transient suppressor;VR 58.1V;Clamping volt 92V at Ipp 6.5A(1mSec)
44	P6SE75	6	Si	A1ts	Transient suppressor;VR 60.7V;Clamping volt 108V at Ipp 5.5A(1mSec)
45	P6SE75A	6	Si	A1ts	Transient suppressor;VR 64.1V;Clamping volt 103V at Ipp 5.8A(1mSec)
46	P6SE82	6	Si	A1ts	Transient suppressor;VR 66.4V;Clamping volt 118V at Ipp 5.1A(1mSec)
47	P6SE82A	6	Si	A1ts	Transient suppressor;VR 70.1V;Clamping volt 113V at Ipp 5.3A(1mSec)
48	P6SE91	6	Si	A1ts	Transient suppressor;VR 73.7V;Clamping volt 131V at Ipp 4.5A(1mSec)
49	P6SE91A	6	Si	A1ts	Transient suppressor;VR 77.8V;Clamping volt 125V at Ipp 4.8A(1mSec)
50	P6SE100	6	Si	A1ts	Transient suppressor;VR 81V;Clamping volt 144V at Ipp 4.2A(1mSec)
51	P6SE100A	6	Si	A1ts	Transient suppressor;VR 85.5V;Clamping volt 137V at Ipp 4.4A(1mSec)
52	P6SE110	6	Si	A1ts	Transient suppressor;VR 89.2V;Clamping volt 158V at Ipp 3.8A(1mSec)
53	P6SE110A	6	Si	A1ts	Transient suppressor;VR 94V;Clamping volt 152V at Ipp 4.0A(1mSec)
54	P6SE120	6	Si	A1ts	Transient suppressor;VR 97.2V;Clamping volt 173V at Ipp 3.5A(1mSec)
55	P6SE120A	6	Si	A1ts	Transient suppressor;VR 102V;Clamping volt 165V at Ipp 3.6A (1mSec)
56	P6SE130	6	Si	A1ts	Transient suppressor;VR 105V;Clamping volt 187V at Ipp 3.2A(1mSec)
57	P6SE130A	6	Si	A1ts	Transient suppressor;VR 111V;Clamping volt 179V at Ipp 3.3A(1mSec)
58	P6SE150	6	Si	A1ts	Transient suppressor;VR 121V;Clamping volt 215V at Ipp 2.8A(1mSec)
59	P6SE150A	6	Si	A1ts	Transient suppressor;VR 128V;Clamping volt 207V at Ipp 2.9A(1mSec)
60	P6SE160	6	Si	A1ts	Transient suppressor;VR 130V;Clamping volt 230V at Ipp 2.6A(1mSec)
61	P6SE160A	6	Si	A1ts	Transient suppressor;VR 136V;Clamping volt 219V at Ipp 2.7A(1mSec)
62	P6SE170	6	Si	A1ts	Transient suppressor;VR 138V;Clamping volt 244V at Ipp 2.5A(1mSec)
63	P6SE170A	6	Si	A1ts	Transient suppressor;VR 145V;Clamping volt 234V at Ipp 2.6A(1mSec)
64	P6SE180	6	Si	A1ts	Transient suppressor;VR 146V;Clamping volt 258V at Ipp 2.3A(1mSec)
65	P6SE180A	6	Si	A1ts	Transient suppressor;VR 154V;Clamping volt 246V at Ipp 2.4A(1mSec)
66	P6SE200	6	Si	A1ts	Transient suppressor;VR 162V;clamping volt 287V at Ipp 2.1 A(1mSee)
67	P6SE200A	6	Si	A1ts	Transient suppressor;VR 171V;clamping volt 274V at Ipp 2.2 A(1mSee)
68	PF8Z6V8	6	Si	DO27	PRSM 800W/1.0mS;Clamp Volt 10.5V at IR(Surge)max 76A;V(BR)R 6.8V
69	PF8Z8V2	6	Si	DO27	PRSM 800W/1.0mS;Clamp Volt 12V at IR(Surge)max 66.5A;V(BR)R 8.2V
70	PF8Z10	6	Si	DO13	PRSM 800W/1.0ms;Clamp Volt 14.5V at IR(Surge)max 55A;V(BR)R 10V
71	PF8Z12	6	Si	DO27	PRSM 800W/1.0mS;Clamp Volt 17V at IR(Surge)max 47A;V(BR)R 12V
72	PF8Z15	6	Si	DO27	PRSM 800W/1.0mS;Clamp Volt 21.5V at IR(Surge)max 37A;V(BR)R 15V
73	PF8Z18	6	Si	DO27	PRSM 800W/1.0ms;Clamp Volt 25.5V at IR(Surge) max 31.5A;V(BR)R 18V
74	PF8Z22	6	Si	DO27	PRSM 800W/1.0mS;Clamp Volt 31.5V at IR(Surge)max 25.5A;V(BR)R 22V
75	PF8Z27	6	Si	DO27	PRSM 800W/1.0mS;Clamp Volt 38.5V at IR(Surge)max 21A;V(BR)R 27V
76	PF8Z33	6	Si	DO27	PRSM 800W/1.0mS;Clamp Volt 47V at IR(Surge)max 17A;V(BR)R 33V
77	PF8Z39	6	Si	DO27	PRSM 800W/1.0mS;Clamp Volt 56V at IR(Surge)max 14.5A;V(BR)R 39V
78	PF8Z47	6	Si	DO27	PRSM 800 W/1.0mS;Clamp Volt 67 Vat IR(Surge) max 12A;V(BR)R 47V
79	PF8Z56	6	Si	DO27	PRSM 800W/1.0mS;Clamp Volt 80V at IR(Surge)max 10A;V(BR)R 56V
80	PF8Z62	6	Si	DO27	PRSM 800W/1.0mS;Clamp Volt 88.5V at IR(Surge)max 9.0A;V(BR)R 62V
81	PF8Z68	6	Si	DO27	PRSM 800W/1.0mS;Clamp Volt 97V at IR(Surge)max 8.3A;V(BR)R 68V
82	PF8Z82	6	Si	DO27	PRSM 800W/1.0mS;Clamp Volt 117V at IR(Surge)max 6.8A;V(BR)R 82V
83	PF8Z100	6	Si	DO27	PRSM 800W/1.0mS;Clamp Volt 143V at IR(Surge)max 5.6A;V(BR)R 100V
84	PF8Z120	6	Si	DO27	PRSM 800W/1.0mS;Clamp Volt 172V at IR(Surge)max 4.6A;V(BR)R 120V
85	PF8Z150	6	Si	DO2F	Prsm 800W/1.0ms; Clamping Volt190V at Ir surge max 4.2A;V(br)R 150V
86	PF8Z180	6	Si	DO2F	PRSM 800W/1.0mS; Clamp Volt 25V at IR (Sugre) max 3.1A; V(BR)R 180V
87	PFZ6V8A	6	Si	A398k	IRM 1.0mA at 5.8VRM;7.14V(BR) max at IR 10mA;10.5V(CL) at Ipp 143A
88	PFZ7V5A	6	Si	A398k	IRM 500uA at 6.4VRM;7.88V(BR) max at IR 10mA;11.3V(CL) at Ipp 132A
89	PFZ8V2A	6	Si	A398k	IRM 200uA at 7.02VRM;8.61V(BR) max at IR 10mA;12.1V(CL) at Ipp 124A
90	PFZ9V1A	6	Si	A398k	IRM 50uA at 7.78VRM;9.55V(BR) max at IR 10mA;13.4V(CL) at Ipp 112A
91	PFZ10A	6	Si	DO27	Clamp Volt 14.5V;V(BR)R 10V;PRSM 1.5kW/1.0ms
92	PFZ11A	6	Si	A398k	IRM 5.0uA at 9.4VRM;11.6V(brBRmax at IR 1.0mA;15.6V(CL) at Ipp 96A
93	PFZ12A	6	Si	A398k	IRM 5.0uA at 10.2VRM;12.6V(BR) max at IR 1.0mA;16.7V(CL) at Ipp 90A
94	PFZ13A	6	Si	A398k	IRM 5.0uA at 11.1VRM;13.7V(BR) max at IR 1.0mA;18.2V(CL) at Ipp 82A
95	PFZ15A	6	Si	A398k	IRM 5.0uA at 12.8VRM;15.8V(BR) max at IR 1.0mA;21.2V(CL) at Ipp 71A
96	PFZ16A	6	Si	A398k	IRM 5.0uA at 13.6VRM;16.8V(BR) max at IR 1.0mA;22.5V(CL) at Ipp 67A
97	PFZ18A	6	Si	A398k	IRM 5.0uA at 15.3VRM;18.9V(br)BRax at IR 1.0mA;25.2V(CL) at Ipp 59.5A
98	PFZ20A	6	Si	A398k	IRM 5.0uA at 17.1VRM;21V(BR) max at IR 1.0mA;27.7V(CL) at Ipp 54A
99	PFZ22A	6	Si	A398k	IRM 5.0uA at 18.8VRM;23.1V(BR) max at IR 1.0mA;30.6V(CL) at Ipp 49A
100	PFZ24A	6	Si	A398k	IRM 5.0uA at 20.5VRM;25.2V(BR) max at IR 1.0mA;33.2V(CL) at Ipp 45A
101	PFZ27A	6	Si	A398k	IRM 5.0uA at 23.1VRM;28.4V(BR) max at IR 1.0mA;37.5V(CL) at Ipp 40A
102	PFZ30A	6	Si	A398k	IRM 5.0uA at 25.6VRM;31.5V(BR) max at IR 1.0mA;41.4V(CL) at Ipp 36A
103	PFZ33A	6	Si	A398k	IRM 5.0uA at 28.2VRM;34.7V(BR) max at IR 1.0mA;45.7V(CL) at Ipp 33A
104	PFZ36A	6	Si	A398k	IRM 5.0uA at 30.8VRM;37.8V(BR) max at IR 1.0mA;49.9V(CL) at Ipp 30A
105	PFZ39A	6	Si	A398k	IRM 5.0uA at 33.3VRM;41V(BR) max at IR 1.0mA;53.9V(CL) at Ipp 28A
106	PFZ43A	6	Si	A398k	IRM 5.0uA at 36.8VRM;45.2V(BR) max at IR 1.0mA;59.3 V(CL) at Ipp 25.3A
107	PFZ47A	6	Si	A398k	IRM 5.0uA at 40.2VRM;49.4V(BR) max at IR 1.0mA;64.8V(CL) at Ipp 23.2A
108	PFZ51A	6	Si	A398k	IRM 5.0uA at 43.6VRM;53.6V(BR) max at IR 1.0mA;70.1V(CL) at Ipp 21.4A
109	PFZ56A	6	Si	A398k	IRM 5.0uA at 47.8VRM;58.8V(BR) max at IR 1.0mA;77V(CL) at Ipp 19.5A
110	PFZ62A	6	Si	A398k	IRM 5.0uA at 53VRM;65.1V(BR) max at IR 1.0mA;85V(CL) at Ipp 17.7A

7. TRANSIENT SUPPRESSOR DIODES - Bipolar & Unipolar Types (Cont'd)

IN ORDER OF (1) TYPE (2) MAT AND (3) TYPE NO.

LINE No.	3 TYPE NUMBER	1 TYPE	2 MAT.	DWG. NO.	DESCRIPTION
1	PFZ68A	6	Si	A398k	IRM 5.0uA at 58.1VRM;71.4V(BR) max at IR 1.0mA;92V(CL) at Ipp 16.3A
2	PFZ75A	6	Si	A398k	IRM 5.0uA at 64.1VRM;78.8V(BR) max at IR 1.0mA;103V(CL) at Ipp 14.6A
3	PFZ82A	6	Si	A398k	IRM 5.0uA at 70.1VRM;86.1V(BR) max at IR 1.0mA;113V(CL) at Ipp 13.3A
4	PFZ91A	6	Si	A398k	IRM 5.0uA at 77.8VRM;95.5V(BR) max at IR 1.0mA;125V(CL) at Ipp 12A
5	PFZ100A	6	Si	A398k	IRM 5.0uA at 85.5VRM;105V(BR) max at IR 1.0mA;137V(CL) at Ipp 11A
6	PFZ110A	6	Si	A398k	IRM 5.0uA at 94VRM;116V(BR) max at IR 1.0mA;152V(CL) at Ipp 9.9A
7	PFZ120A	6	Si	A398k	IRM 5.0uA at 102VRM;126V(BR) max at IR 1.0mA;165V(CL) at Ipp 9.1A
8	PFZ130A	6	Si	A398k	IRM 5.0uA at 111VRM;137V(BR) max at IR 1.0mA;179V(CL) at Ipp 8.4A
9	PFZ150A	6	Si	A398k	IRM 5.0uA at 128VRM;158V(BR) max at IR 1.0mA;207V(CL) at Ipp 7.2A
10♦	PFZ160A	6	Si	A398k	IRM 5.0uA at 136VRM;168V(BR) max at IR 1.0mA;219V(CL) at Ipp 6.8A
11	PFZ170A	6	Si	A398k	IRM 5.0uA at 145VRM;179V(BR) max at IR 1.0mA;234V(CL) at Ipp 6.4A
12	PFZ180A	6	Si	A398k	IRM 5.0uA at 154VRM;189V(BR) max at IR 1.0mA;246V(CL) at Ipp 6.1A
13	PFZ200A	6	Si	A398k	IRM 5.0uA at 171VRM;210V(BR) max at IR 1.0mA;274V(CL) at Ipp 5.5A
14	PFZ220A	6	Si	A398k	IRM 5.0uA at 185VRM;231V(BR) max at IR 1.0mA;328V(CL) at Ipp 4.6A
15	PFZD6V8	6	Si	DO27	PRSM 800W/1.0mS; Clamp Volt 10.5V at IR (Sugre) max 76A; V(BR)R 6.8V
16	PFZD8V2	6	Si	DO27	PRSM 800W/1.0mS; Clamp Volt 12V at IR (Surge) max 66.5A; V(BR)R 8.2V
17	PFZD10	6	Si	DO27	PRSM 800W/1.0mS; Clamp Volt 14.5V at IR (Surge) max 55A; V(BR)R 10V
18	PFZD12	6	Si	DO27	PRSM 800W/1.0mS; Clamp Volt 17V at IR (Surge) max 47A; V(BR)R 12V
19	PFZD15	6	Si	DO27	PRSM 800W/1.0mS; Clamp Volt 21.5V at IR (Surge) max 37A; V(BR)R 15V
20	PFZD18	6	Si	DO27	PRSM 800W/1.0mS; Clamp Volt 25.5V at IR (Surge) max 31.5A; V(BR)R 18V
21	PFZD22	6	Si	DO27	PRSM 800W/1.0mS; Clamp Volt 31.5V at IR (Surge) max 25.5A; V(BR)R 22V
22	PFZD27	6	Si	DO27	PRSM 800W/1.0mS; Clamp Volt 38.5V at IR (Surge) max 21A; V(BR)R 27V
23	PFZD33	6	Si	DO27	PRSM 800W/1.0mS; Clamp Volt 47V at IR (Surge) max 17A; V(BR)R 33V
24	PFZD39	6	Si	DO27	PRSM 800W/1.0mS; Clamp Volt 56V at IR (Surge) max 14.5A; V(BR)R 39V
25	PFZD47	6	Si	DO27	PRSM 800W/1.0mS; Clamp Volt 67V at IR (Surge) max 12A; V(BR)R 47V
26	PFZD56	6	Si	DO27	PRSM 800W/1.0mS; Clamp Volt 80V at IR (Surge) max 10A; V(BR)R 56V
27	PFZD62	6	Si	DO27	PRSM 800W/1.0mS; Clamp Volt 88.5V at IR (Surge) max 9.0A; V(BR)R 62V
28	PFZD68	6	Si	DO27	PRSM 800W/1.0mS; Clamp Volt 97V at IR (Surge) max 8.3A; V(BR)R 68V
29	PFZD82	6	Si	DO27	PRSM 800W/1.0mS; Clamp Volt 117V at IR (Surge) max 6.8A V(BR)R 82V
30	PFZD100	6	Si	DO27	PRSM 800W/1.0mS; Clamp Volt 143V at IR (Surge) max 5.6A; V(BR)R 100V
31	PFZD120	6	Si	DO27	PRSM 800W/1.0mS; Clamp Volt 172V at IR (Surge) max 4.6A; V(BR)R 120V
32	PFZD150	6	Si	DO27	PRSM 800W/1.0mS; Clamp Volt 215V at IR (Surge) max 3.7A; V(BR)R 150V
33	PFZD180	6	Si	DO27	PRSM 800W/1.0mS; Clamp Volt 257V at IR (Surge) max 3.1A; V(BR)R 180V
34	PIP8.4	6	Si	M963▼	VR 12V;VB 14Vmin at 10mA;Clamp Volt 22Vmax;IPP 341A;PP 7.5kw
35	PIP24	6	Si	M963▼	VR 34V;VB 40Vmin at 10mA;Clamp Volt 67Vmax;IPP 112A;PP 7.5kw
36	PIP30	6	Si	M963▼	VR 42.5V;VB 50Vmin at 1.0mA;Clamp Volt 84Vmax;IPP 90A;PP 7.5kw
37	PIP60	6	Si	M963▼	VR 85V;VB 100Vmin at 1.0mA;Clamp Volt 167Vmax;IPP 90A;PP 15kw
38	PIP120	6	Si	M963▼	VR 170V;VB 200Vmin at 1.0mA;Clamp Volt 319Vmax;IPP 47A;PP 15kw
39	PIP208	6	Si	M963▼	VR 294V;VB 347Vmin at 1.0mA;Clamp Volt 536Vmax;IPP 28A;PP 15kw
40	PIP250	6	Si	M963▼	VR 354V;VB 418Vmin at 1.0mA;Clamp Volt 652Vmax;IPP 23A;PP 15kw
41	PIP440	6	Si	M963▼	VR 623V;VB 735V min at 1.0mA;Clamp Volt 1138Vmax;IPP 13.2A;PP 15kW
42	PIP500	6	Si	M963▼	VR 708V;VB 835V min at 1.0mA;Clamp Volt 1292Vmax;IPP 11.6A;PP 15kW
43	S5KP5.0	6	Si	A416b	VR 5.0V;VB 6.40-7.30V at IT 50mA;IR 2.0mAmax;IPP 520A;TC 4.0mV/°C
44	S5KP5.0A	6	Si	A416b	VR 5.0V;VB 6.40-7.00V at IT 50mA;IR 2.0mAmax;IPP 543A;TC 4.0mV/°C
45	S5KP6.0	6	Si	A416b	VR 6.0V;VB 6.67-8.15V at IT 50mA;IR 5.0mAmax;IPP 439A;TC 4.0mV/°C
46	S5KP6.0A	6	Si	A416b	VR 6.0V;VB 6.67-7.37V at IT 50mA;IR 5.0mAmax;IPP 485A;TC 4.0mV/°C
47	S5KP6.5	6	Si	A416b	VR 6.5V;VB 7.22-8.82V at IT 50mA;IR 2.0mAmax;IPP 407A;TC 4.0mV/°C
48	S5KP6.5A	6	Si	A416b	VR 6.5V;VB 7.22-7.98V at IT 50mA;IR 2.0mAmax;IPP 447A;TC 4.0mV/°C
49	S5KP7.0	6	Si	A416b	VR 7.0V;VB 7.78-9.51V at IT 50mA;IR 1.0mAmax;IPP 378A;TC 5.0mV/°C
50	S5KP7.0A	6	Si	A416b	VR 7.0V;VB 7.78-8.60V at IT 50mA;IR 1.0mAmax;IPP 417A;TC 5.0mV/°C
51	S5KP7.5	6	Si	A416b	VR 7.5V;VB 8.33-10.2V at IT 5.0mA;IR 250uAmax;IPP 350A;TC 6.0mV/°C
52	S5KP7.5A	6	Si	A416b	VR 7.5V;VB 8.33-9.21V at IT 5.0mA;IR 250uAmax;IPP 388A;TC 6.0mV/°C
53	S5KP8.0	6	Si	A416b	VR 8.0V;VB 8.89-10.9V at IT 5.0mA;IR 150uAmax;IPP 333A;TC 6.0mV/°C
54	S5KP8.0A	6	Si	A416b	VR 8.0V;VB 8.89-9.83V at IT 5.0mA;IR 150uAmax;IPP 367A;TC 6.0mV/°C
55	S5KP8.5	6	Si	A416b	VR 8.5V;VB 9.44-11.5V at IT 5.0mA;IR 50uAmax;IPP 314A;TC 7.0mV/°C
56	S5KP8.5A	6	Si	A416b	VR 8.5V;VB 9.44-10.4V at IT 5.0mA;IR 50uAmax;IPP 347A;TC 7.0mV/°C
57	S5KP9.0	6	Si	A416b	VR 9.0V;VB 10-12.2V at IT 5.0mA;IR 20uAmax;IPP 295A;TC 8.0mV/°C
58	S5KP9.0A	6	Si	A416b	VR 9.0V;VB 10-11.1V at IT 5.0mA;IR 20uAmax;IPP 325A;TC 8.0mV/°C
59	S5KP10	6	Si	A416b	VR 10V;VB 11.1-13.6V at IT 5.0mA;IR 15uAmax;IPP 266A;TC 9.0mV/°C
60	S5KP10A	6	Si	A416b	VR 10V;VB 11.1-12.3V at IT 5.0mA;IR 15uAmax;IPP 294A;TC 9.0mV/°C
61	S5KP11	6	Si	A416b	VR 11V;VB 12.2-14.9V at IT 5.0mA;IR 10uAmax;IPP 249A;TC 10mV/°C
62	S5KP11A	6	Si	A416b	VR 11V;VB 12.2-13.5V at IT 5.0mA;IR 10uAmax;IPP 274A;TC 10mV/°C
63	S5KP12	6	Si	A416b	VR 12V;VB 13.3-16.3V at IT 5.0mA;IR 10uAmax;IPP 227A;TC 11mV/°C
64	S5KP12A	6	Si	A416b	VR 12V;VB 13.3-14.7V at IT 5.0mA;IR 10uAmax;IPP 251A;TC 11mV/°C
65	S5KP13	6	Si	A416b	VR 13V;VB 14.4-17.6V at IT 5.0mA;IR 10uAmax;IPP 210A;TC 12mV/°C
66	S5KP13A	6	Si	A416b	VR 13V;VB 14.4-15.9V at IT 5.0mA;IR 10uAmax;IPP 232A;TC 12mV/°C
67	S5KP14	6	Si	A416b	VR 14V;VB 15.6-19.1V at IT 5.0mA;IR 10uAmax;IPP 194A;TC 13mV/°C
68	S5KP14A	6	Si	A416b	VR 14V;VB 15.6-17.2V at IT 5.0mA;IR 10uAmax;IPP 215A;TC 13mV/°C
69	S5KP15	6	Si	A416b	VR 15V;VB 16.7-20.4V at IT 5.0mA;IR 10uAmax;IPP 188A;TC 15mV/°C
70	S5KP15A	6	Si	A416b	VR 15V;VB 16.7-18.5V at IT 5.0mA;IR 10uAmax;IPP 206A;TC 15mV/°C
71	S5KP16	6	Si	A416b	VR 16V;VB 17.8-21.8V at IT 5.0mA;IR 10uAmax;IPP 176A;TC 18mV/°C
72	S5KP16A	6	Si	A416b	VR 16V;VB 17.8-19.7V at IT 5.0mA;IR 10uAmax;IPP 192A;TC 16mV/°C
73	S5KP17	6	Si	A416b	VR 17V;VB 18.9-23.1V at IT 5.0mA;IR 10uAmax;IPP 164A;TC 19mV/°C
74	S5KP17A	6	Si	A416b	VR 17V;VB 18.9-20.9V at IT 5.0mA;IR 10uAmax;IPP 181A;TC 18mV/°C
75	S5KP18	6	Si	A416b	VR 18V;VB 20-24.4V at IT 5.0mA;IR 10uAmax;IPP 155A;TC 20mV/°C
76	S5KP18A	6	Si	A416b	VR 18V;VB 20-22.1V at IT 5.0mA;IR 10uAmax;IPP 172A;TC 19mV/°C
77	S5KP20	6	Si	A416b	VR 20V;VB 22.2-27.1V at IT 5.0mA;IR 10uAmax;IPP 139A;TC 24mV/°C
78	S5KP20A	6	Si	A416b	VR 20V;VB 22.2-24.5V at IT 5.0mA;IR 10uAmax;IPP 154A;TC 22mV/°C
79	S5KP22	6	Si	A416b	VR 22V;VB 24.4-29.8V at IT 5.0mA;IR 10uAmax;IPP 127A;TC 27mV/°C
80	S5KP22A	6	Si	A416b	VR 22V;VB 24.4-26.9V at IT 5.0mA;IR 10uAmax;IPP 141A;TC 24mV/°C
81	S5KP24	6	Si	A416b	VR 24V;VB 26.7-32.6V at IT 5.0mA;IR 10uAmax;IPP 116A;TC 30mV/°C
82	S5KP24A	6	Si	A416b	VR 24V;VB 26.7-29.5V at IT 5.0mA;IR 10uAmax;IPP 128A;TC 27mV/°C
83	S5KP26	6	Si	A416b	VR 26V;VB 28.9-35.3V at IT 5.0mA;IR 10uAmax;IPP 107A;TC 33mV/°C
84	S5KP26A	6	Si	A416b	VR 26V;VB 28.9-31.9V at IT 5.0mA;IR 10uAmax;IPP 119A;TC 29mV/°C
85	S5KP28	6	Si	A416b	VR 28V;VB 31.1-38V at IT 5.0mA;IR 10uAmax;IPP 99A;TC 34mV/°C
86	S5KP28A	6	Si	A416b	VR 28V;VB 31.1-34.4V at IT 5.0mA;IR 10uAmax;IPP 110A;TC 30mV/°C
87	S5KP30	6	Si	A416b	VR 30V;VB 33.3-40.7V at IT 5.0mA;IR 10uAmax;IPP 93A;TC 38mV/°C
88	S5KP30A	6	Si	A416b	VR 30V;VB 33.3-36.8V at IT 5.0mA;IR 10uAmax;IPP 103A;TC 35mV/°C
89	S5KP33	6	Si	A416b	VR 33V;VB 36.7-44.9V at IT 5.0mA;IR 10uAmax;IPP 85A;TC 41mV/°C
90	S5KP33A	6	Si	A416b	VR 33V;VB 36.7-40.6V at IT 5.0mA;IR 10uAmax;IPP 94A;TC 38mV/°C
91	S5KP36	6	Si	A416b	VR 36V;VB 40-48.9V at IT 5.0mA;IR 10uAmax;IPP 78A;TC 45mV/°C
92	S5KP36A	6	Si	A416b	VR 36V;VB 40-44.2V at IT 5.0mA;IR 10uAmax;IPP 86A;TC 40mV/°C
93	S5KP40	6	Si	A416b	VR 40V;VB 44.4-54.3V at IT 5.0mA;IR 10uAmax;IPP 70A;TC 50mV/°C
94	S5KP40A	6	Si	A416b	VR 40V;VB 44.4-49.1V at IT 5.0mA;IR 10uAmax;IPP 78A;TC 45mV/°C
95	S5KP43	6	Si	A416b	VR 43V;VB 47.8-58.4V at IT 5.0mA;IR 10uAmax;IPP 65A;TC 54mV/°C
96	S5KP43A	6	Si	A416b	VR 43V;VB 47.8-52.8V at IT 5.0mA;IR 10uAmax;IPP 72A;TC 49mV/°C
97	S5KP45	6	Si	A416b	VR 45V;VB 50-61.1V at IT 5.0mA;IR 10uAmax;IPP 62A;TC 57mV/°C
98	S5KP45A	6	Si	A416b	VR 45V;VB 50-55.3V at IT 5.0mA;IR 10uAmax;IPP 69A;TC 51mV/°C
99	S5KP48	6	Si	A416b	VR 48V;VB 53.3-65.1V at IT 5.0mA;IR 10uAmax;IPP 58A;TC 62mV/°C
100	S5KP48A	6	Si	A416b	VR 48V;VB 53.3-58.9V at IT 5.0mA;IR 10uAmax;IPP 65A;TC 55mV/°C
101	S5KP51	6	Si	A416b	VR 51V;VB 56.7-69.3V at IT 5.0mA;IR 10mAmax;IPP 55A;TC 65mV/°C
102	S5KP51A	6	Si	A416b	VR 51V;VB 56.7-62.7V at IT 5.0mA;IR 10mAmax;IPP 61A;TC 60mV/°C
103	S5KP54	6	Si	A416b	VR 54V;VB 60-73.3V at IT 5.0mA;IR 10uAmax;IPP 52A;TC 70mV/°C
104	S5KP54A	6	Si	A416b	VR 54V;VB 60-66.3V at IT 5.0mA;IR 10uAmax;IPP 57A;TC 64mV/°C
105	S5KP58	6	Si	A416b	VR 58V;VB 64.4-78.7V at IT 5.0mA;IR 10uAmax;IPP 49A;TC 77mV/°C
106	S5KP58A	6	Si	A416b	VR 58V;VB 64.4-71.2V at IT 5.0mA;IR 10uAmax;IPP 53A;TC 69mV/°C
107	S5KP60	6	Si	A416b	VR 60V;VB 66.7-81.5V at IT 5.0mA;IR 10uAmax;IPP 47A;TC 79mV/°C
108	S5KP60A	6	Si	A416b	VR 60V;VB 66.7-73.7V at IT 5.0mA;IR 10uAmax;IPP 52A;TC 70mV/°C
109	S5KP64	6	Si	A416b	VR 64V;VB 71.1-86.9V at IT 5.0mA;IR 10uAmax;IPP 44A;TC 85mV/°C
110	S5KP64A	6	Si	A416b	VR 64V;VB 71.1-78.6V at IT 5.0mA;IR 10uAmax;IPP 49A;TC 75mV/°C

SYMBOLS AND CODES EXPLAINED IN INTERPRETER

7. TRANSIENT SUPPRESSOR DIODES – Bipolar & Unipolar Types (Cont'd)

IN ORDER OF (1) TYPE (2) MAT AND (3) TYPE NO.

LINE No.	3 TYPE NUMBER	1 TYPE	2 MAT.	DWG. NO.	DESCRIPTION
1	S5KP70	6	Si	A416b	VR 70V;VB 77.8-95.1V at IT 5.0mA;IR 10uAmax;IPP 40A;TC 93mV/°C
2	S5KP70A	6	Si	A416b	VR 70V;VB 77.8-86V at IT 5.0mA;IR 10uAmax;IPP 44A;TC 84mV/°C
3	S5KP75	6	Si	A416b	VR 75V;VB 83.3-102V at IT 5.0mA;IR 10uAmax;IPP 37A;TC 100mV/°C
4	S5KP75A	6	Si	A416b	VR 75V;VB 83.3-92.1V at IT 5.0mA;IR 10uAmax;IPP 41A;TC 90mV/°C
5	S5KP78	6	Si	A416b	VR 78V;VB 86.7-106V at IT 5.0mA;IR 10uAmax;IPP 36A;TC 104mV/°C
6	S5KP78A	6	Si	A416b	VR 78V;VB 86.7-95.8V at IT 5.0mA;IR 10uAmax;IPP 40A;TC 94mV/°C
7	S5KP85	6	Si	A416b	VR 85V;VB 94.4-115V at IT 5.0mA;IR 10uAmax;IPP 33A;TC 113mV/°C
8	S5KP85A	6	Si	A416b	VR 85V;VB 94.4-104V at IT 5.0mA;IR 10uAmax;IPP 36A;TC 102mV/°C
9	S5KP90	6	Si	A416b	VR 90V;VB 100-122V at IT 5.0mA;IR 10uAmax;IPP 31A;TC 120mV/°C
10	S5KP90A	6	Si	A416b	VR 90V;VB 100-111V at IT 5.0mA;IR 10uAmax;IPP 34A;TC 109mV/°C
11	S5KP100	6	Si	A416b	VR 100V;VB 111-136V at IT 5.0mA;IR 10uAmax;IPP 28A;TC 134mV/°C
12	S5KP100A	6	Si	A416b	VR 100V;VB 111-123V at IT 5.0mA;IR 10uAmax;IPP 31A;TC 122mV/°C
13	S5KP110	6	Si	A416b	VR 110V;VB 122-149V at IT 5.0mA;IR 10uAmax;IPP 26A;TC 147mV/°C
14	S5KP110A	6	Si	A416b	VR 110V;VB 122-135V at IT 5.0mA;IR 10uAmax;IPP 28A;TC 132mV/°C
15	SA1002CA	6	Si	DO41	VC 11.3V max;VR 6.40V;BV 7.88Vmax at 10mA;Temp 175°C max Oper
16	SICT5	6	Si	DO13	IR 300uA at VR 5.0V;VBR 6.0Vmin;Peak Pulse I 160A;Pd 1.0W
17	SICT8	6	Si	DO13	IR 25uA at VR 8.0V;VBR 9.4Vmin;Peak Pulse I 100A;Pd 1.0W
18	SICT10	6	Si	DO13	IR 2.0uA at VR 10V; VBR 11.7V min; Peak Pulse I 90A; Pd 1.0W
19	SICT12	6	Si	DO13	IR 2.0uA at VR12V; VBR 14.1V min; Peak Pulse I 70A; Pd 1.0 W
20	SICT15	6	Si	DO13	IR 2.0uA at VR 15V; VBR 17.6V min; Peak Pulse I 60A; Pd 1.0 W
21	SICT18	6	Si	DO13	IR 2.0uA at VR 18V;VBR 21.2Vmin;Peak Pulse I 50A;Pd 1.0W
22	SICT22	6	Si	DO13	IR 2.0uA at VR 22V;VBR 25.9Vmin;Peak Pulse I 40A;Pd 1.0W
23	SICT36	6	Si	DO13	IR 2.0uA at VR 36V; VBR 42.4V min; Peak Pulse I 23A; Pd 1.0 W
24	SICT45	6	Si	DO13	IR 2.0uA at VR 45V;VBR 52.9Vmin;Peak Pulse I 19A;Pd 1.0W
25	SICTE5	6	Si	Alew	IR 300uA at VR 5.0V;VBR 6.0Vmin;Peak Pulse I 160A;Pd 5.0W
26	SICTE8	6	Si	Alew	IR 25uA at VR 8.0V;VBR 9.4Vmin;Peak Pulse I 100A;Pd 5.0W
27	SICTE12	6	Si	Alew	IR 2.0uA at VR 12V; VBR 14.1V min; Peak Pulse I 70 A; Pd 5.0 W
28	SICTE15	6	Si	Alew	IR 2.0uA at VR 15V; VBR 17.6V min; Peak Pulse I 60A; Pd 5.0W
29	SICTE18	6	Si	Alew	IR 2.0uA at VR 18V; VBR 21.2V min; Peak Pulse I 50A; Pd 5.0 W
30	SICTE22	6	Si	Alew	IR 2.0uA at VR 22V;VBR 25.9V min; Peak Pulse I 40A; Pd 5.0 W
31	SICTE36	6	Si	Alew	IR 2.0uA at VR 36V; VBR 42.4V min; Peak Pulse I 23A; Pd 5.0 W
32	SICTE45	6	Si	Alew	IR 2.0uA at VR 45V; VBR 52.9V min; Peak Pulse I 19A; Pd 5.0W
33	SLC6.5	6	Si	A31ac	Transient suppressor;VR 6.5V;clamping volt 12.3V;CT 100pF at 0V
34	SLC6.5A	6	Si	A31ac	Transient suppressor;VR 6.5V;clamping volt 11.2V;CT 100pF at 0V
35	SLC7.0	6	Si	A31ac	Transient suppressor;VR 7.0V;clamping volt 13.3V;CT 100pF at 0V
36	SLC7.0A	6	Si	A31ac	Transient suppressor;VR 7.0V;clamping volt 12V;CT 100pF at 0V
37	SLC7.5	6	Si	A31ac	Transient suppressor;VR 7.5V;clamping volt 14.3V;CT 100pF at 0V
38	SLC7.5A	6	Si	A31ac	Transient suppressor;VR 7.5V;clamping volt 12.9V;CT 100pF at 0V
39	SLC8.0	6	Si	A31ac	Transient suppressor;VR 8.0V;clamping volt 15V;CT 100pF at 0V
40	SLC8.0A	6	Si	A31ac	Transient suppressor;VR 8.0V;clamping volt 13.6V;CT 100pF at 0V
41	SLC8.5	6	Si	A31ac	Transient suppressor;VR 8.5V;clamping volt 15.9V;CT 100pF at 0V
42	SLC8.5A	6	Si	A31ac	Transient suppressor;VR 8.5V;clamping volt 14.4V;CT 100pF at 0V
43	SLC9.0	6	Si	A31ac	Transient suppressor;VR 9.0V;clamping volt 16.9V;CT 100 pF at 0V
44	SLC9.0A	6	Si	A31ac	Transient suppressor;VR 9.0V;clamping volt 15.4V;CT 100 pF at 0V
45	SLC10	6	Si	A31ac	Transient suppressor;VR 10V;clamping volt 18.8V;CT 100pF at 0V
46	SLC10A	6	Si	A31ac	Transient suppressor;VR 10V;clamping volt 17V;CT 100pF at 0V
47	SLC11	6	Si	A31ac	Transient suppressor;VR 11V;clamping volt 20.1V;CT 100pF at 0V
48	SLC11A	6	Si	A31ac	Transient suppressor;VR 11V;clamping volt 18.2V;CT 100pF at 0V
49	SLC12	6	Si	A31ac	Transient suppressor;VR 12V;clamping volt 22V;CT 100pF at 0V
50	SLC12A	6	Si	A31ac	Transient suppressor;VR 12V;clamping volt 19.9V;CT 100pF at 0V
51	SLC13	6	Si	A31ac	Transient suppressor;VR 13V;clamping volt 23.8V;CT 100pF at 0V
52	SLC13A	6	Si	A31ac	Transient suppressor;VR 13V;clamping volt 21.5V;CT 100pF at 0VV
53	SLC14	6	Si	A31ac	Transient suppressor;VR 14V;clamping volt 25.8V;CT 100pF at 0V
54	SLC14A	6	Si	A31ac	Transient suppressor;VR 14V;clamping volt 23.2V;CT 100pF at 0V
55	SLC15	6	Si	A31ac	Transient suppressor;VR 15V;clamping volt 26.9V;CT 100pF at 0V
56	SLC15A	6	Si	A31ac	Transient suppressor;VR 15V;clamping volt 24.4V;CT 100pF at 0V
57	SLC16	6	Si	A31ac	Transient suppressor;VR 16V;clamping volt 28.8V;CT 100pF at 0V
58	SLC16A	6	Si	A31ac	Transient suppressor;VR 16V;clamping volt 26V;CT 100pF at 0V
59	SLC17	6	Si	A31ac	Transient suppressor;VR 17V;clamping volt 30.5V;CT 100pF at 0V
60	SLC17A	6	Si	A31ac	Transient suppressor;VR 17V;clamping volt 27.6V;CT 100pF at 0V
61	SLC18	6	Si	A31ac	Transient suppressor;VR 18V;clamping volt 32.2V;CT 100pF at 0V
62	SLC18A	6	Si	A31ac	Transient suppressor;VR 18V;clamping volt 29.2V;CT 100pF at 0V
63	SLC20	6	Si	A31ac	Transient suppressor;VR 20V;clamping volt 35.8V;CT 100pF at 0V
64	SLC20A	6	Si	A31ac	Transient suppressor;VR 20V;clamping volt 32.4V;CT 100pF at 0V
65	SLC22	6	Si	A31ac	Transient suppressor;VR 22V;clamping volt 39.4V;CT 100pF at 0V
66	SLC22A	6	Si	A31ac	Transient suppressor;VR 22V;clamping volt 35.5V;CT 100pF at 0V
67	SLC24	6	Si	A31ac	Transient suppressor;VR 24V;clamping volt 43V;CT 100pF at 0V
68	SLC24A	6	Si	A31ac	Transient suppressor;VR 24V;clamping volt 38.9V;CT 100pF at 0V
69	SLC26	6	Si	A31ac	Transient suppressor;VR 26V;clamping volt 46.6V;CT 100pF at 0V
70	SLC26A	6	Si	A31ac	Transient suppressor;VR 26V;clamping volt 42.1V;CT 100pF at 0V
71	SLC28	6	Si	A31ac	Transient suppressor;VR 28V;clamping volt 50.1V;CT 100pF at 0V
72	SLC28A	6	Si	A31ac	Transient suppressor;VR 28V;clamping volt 45.4V;CT 100pF at 0V
73	SLC30	6	Si	A31ac	Transient suppressor;VR 30V;clamping volt 53.5V;CT 100pF at 0V
74	SLC30A	6	Si	A31ac	Transient suppressor;VR 30V;clamping volt 48.4V;CT 100pF at 0VV
75	SLC33	6	Si	A31ac	Transient suppressor;VR 33V;clamping volt 59V;CT 100pF at 0V
76	SLC33A	6	Si	A31ac	Transient suppressor;VR 33V;clamping volt 53.3V;CT 100pF at 0V
77	SLC36	6	Si	A31ac	Transient suppressor;VR 36V;clamping volt 64.3V;CT 100pF at 0V
78	SLC36A	6	Si	A31ac	Transient suppressor;VR 36V;clamping volt 58.1V;CT 100pF at 0V
79	SLC40	6	Si	A31ac	Transient suppressor;VR 40V;clamping volt 71.4V;CT 100pF at 0V
80	SLC40A	6	Si	A31ac	Transient suppressor;VR 40V;clamping volt 64.5V;CT 100pF at 0V
81	SLC43	6	Si	A31ac	Transient suppressor;VR 43V;clamping volt 76.7V;CT 100pF at 0V
82	SLC43A	6	Si	A31ac	Transient suppressor;VR 43V;clamping volt 69.4V;CT 100pF at 0V
83	SLC45	6	Si	A31ac	Transient suppressor;VR 45V;clamping volt 80.3V;CT 100pF at 0V
84	SLC45A	6	Si	A31ac	Transient suppressor;VR 45V;clamping volt 72.7V;CT 100pF at 0V
85	SLC48	6	Si	A31ac	Transient suppressor;VR 48V;clamping volt 85.5V;CT 100pF at 0V
86	SLC48A	6	Si	A31ac	Transient suppressor;VR 48V;clamping volt 77.4V;CT 100pF at 0V
87	SLC51	6	Si	A31ac	Transient suppressor;VR 51V;clamping volt 91.1V;CT 100pF at 0V
88	SLC51A	6	Si	A31ac	Transient suppressor;VR 51V;clamping volt 82.4V;CT 100pF at 0V
89	SLC54	6	Si	A31ac	Transient suppressor;VR 54V;clamping volt 96.3V;CT 100pF at 0V
90	SLC54A	6	Si	A31ac	Transient suppressor;VR 54V;clamping volt 87.1V;CT 100pF at 0V
91	SLC58	6	Si	A31ac	Transient suppressor;VR 58V;clamping volt 103V;CT 100pF at 0V
92	SLC58A	6	Si	A31ac	Transient suppressor;VR 58V;clamping volt 93.6V;CT 100pF at 0V
93	SLC60	6	Si	A31ac	Transient suppressor;VR 60V;clamping volt 107V;CT 90pF at 0V
94	SLC60A	6	Si	A31ac	Transient suppressor;VR 60V;clamping volt 96.8V;CT 90pF at 0V
95	SLC64	6	Si	A31ac	Transient suppressor;VR 64V;clamping volt 114V;CT 90pF at 0V
96	SLC64A	6	Si	A31ac	Transient suppressor;VR 64V;clamping volt 103V;CT 90pF at 0V
97	SLC70	6	Si	A31ac	Transient suppressor;VR 70V;clamping volt 125V;CT 90pF at 0V
98	SLC70A	6	Si	A31ac	Transient suppressor;VR 70V;clamping volt 113V;CT 90pF at 0V
99	SLC75	6	Si	A31ac	Transient suppressor;VR 75V;clamping volt 134V;CT 90pF at 0V
100	SLC75A	6	Si	A31ac	Transient suppressor;VR 75V;clamping volt 121V;CT 90pF at 0V
101	SLC80	6	Si	A31ac	Transient suppressor;VR 80V;clamping volt 142V;CT 90pF at 0V
102	SLC80A	6	Si	A31ac	Transient suppressor;VR 80V;clamping volt 129V;CT 90pF at 0V
103	SLC90	6	Si	A31ac	Transient suppressor;VR 90V;clamping volt 160V;CT 90pF at 0V
104	SLC90A	6	Si	A31ac	Transient suppressor;VR 90V;clamping volt 146V;CT 90pF at 0V
105	SLC100	6	Si	A31ac	Transient suppressor;VR 100V;clamping volt 179V;CT 90pF at 0V
106	SLC100A	6	Si	A31ac	Transient suppressor;VR 100V;clamping volt 162V;CT 90pF at 0V
107	SLC110	6	Si	A31ac	Transient suppressor;VR 110V;clamping volt 196V;CT 90pF at 0V
108	SLC110A	6	Si	A31ac	Transient suppressor;VR 110V;clamping volt 178V;CT 90pF at 0V
109	SLC120	6	Si	A31ac	Transient suppressor;VR 120V;clamping volt 214V;CT 90pF at 0V
110	SLC120A	6	Si	A31ac	Transient suppressor;VR 120V;clamping volt 193V;CT 90pF at 0V

SYMBOLS AND CODES EXPLAINED IN INTERPRETER

7. TRANSIENT SUPPRESSOR DIODES - Bipolar & Unipolar Types (Cont'd)

IN ORDER OF (1) TYPE (2) MAT AND (3) TYPE NO.

LINE No.	3 TYPE NUMBER	1 TYPE	2 MAT.	DWG. NO.	DESCRIPTION	
1	SLC130	6	Si	A31ac	Transient suppressor;VR 130V;clamping volt 231V;CT 90pF at 0V	
2	SLC130A	6	Si	A31ac	Transient suppressor;VR 130V;clamping volt 209V;CT 90pF at 0V	
3	SLC150	6	Si	A31ac	Transient suppressor;VR 150V;clamping volt 268V;CT 90pF at 0V	
4	SLC150A	6	Si	A31ac	Transient suppressor;VR 150V;clamping volt 243V;CT 90pF at 0V	
5	SLC160	6	Si	A31ac	Transient suppressor;VR 160V;clamping volt 287V;CT 90pF at 0V	
6	SLC160A	6	Si	A31ac	Transient suppressor;VR 160V;clamping volt 259V;CT 90pF at 0V	
7	SLC170	6	Si	A31ac	Transient suppressor;VR 170V;clamping volt 304V;CT 90pF at 0V	
8	SLC170A	6	Si	A31ac	Transient suppressor;VR 170V;clamping volt 275V;CT 90pF at 0VV	
9	SLCE6.5	6	Si	A1ey	Transient suppressor;VR 6.5V;clamping volt 12.3V;CT 100pF at 0V	
10	SLCE6.5A	6	Si	A1ey	Transient suppressor;VR 6.5V;clamping volt 11.2V;CT 100pF at 0V	
11	SLCE7.0	6	Si	A1ey	Transient suppressor;VR 7.0V;clamping volt 13.3V;CT 100pF at 0V	
12	SLCE7.0A	6	Si	A1ey	Transient suppressor;VR 7.0V;clamping volt 12V;CT 100pF at 0V	
13	SLCE7.5	6	Si	A1ey	Transient suppressor;VR 7.5V;clamping volt 14.3V;CT 100pF at 0V	
14	SLCE7.5A	6	Si	A1ey	Transient suppressor;VR 7.5V;clamping volt 12.9V;CT 100pF at 0V	
15	SLCE8.0	6	Si	A1ey	Transient suppressor;VR 8.0V;clamping volt 15V;CT 100pF at 0V	
16	SLCE8.0A	6	Si	A1ey	Transient suppressor;VR 8.0V;clamping volt 13.6V;CT 100pF at 0V	
17	SLCE8.5	6	Si	A1ey	Transient suppressor;VR 8.5V;clamping volt 15.9V;CT 100pF at 0V	
18	SLCE8.5A	6	Si	A1ey	Transient suppressor;VR 8.5V;clamping volt 14.4V;CT 100pF at 0V	
19	SLCE9.0	6	Si	A1ey	Transient suppressor;VR 9.0V;clamping volt 16.9V;CT 100pF at 0V	
20	SLCE9.0A	6	Si	A1ey	Transient Suppressor;VR9.0V;Clamping Volt 15.4V;CT 100pF at 0V	
21	SLCE10	6	Si	A1ey	Transient suppressor;VR 10V;clamping volt 18.8V;CT 100pF at 0V	
22	SLCE10A	6	Si	A1ey	Transient suppressor;VR 10V;clamping volt 17V;CT 100pF at 0V	
23	SLCE11	6	Si	A1ey	Transient suppressor;VR 11V;clamping volt 20.1V;CT 100pF at 0V	
24	SLCE11A	6	Si	A1ey	Transient suppressor;VR 11V;clamping volt 18.2V;CT 100pF at 0V♦	
25	SLCE12	6	Si	A1ey	Transient suppressor;VR 12V;clamping volt 22V;CT 100pF at 0V	
26	SLCE12A	6	Si	A1ey	Transient suppressor;VR 12V;clamping volt 19.9V;CT 100pF at 0V	
27	SLCE13	6	Si	A1ey	Transient suppressor;VR 13V;clamping volt 23.8V;CT 100pF at 0V	
28	SLCE13A	6	Si	A1ey	Transient suppressor;VR 13V;clamping volt 21.5V;CT 100pF at 0V	
29	SLCE14	6	Si	Aley	Transient suppressor;VR 14 V;clamping volt 25.8V;CT 100pF at 0V	N
30	SLCE14A	6	Si	A1ey	Transient Suppress;VR 14V;Clamping Volt 23.2V;CT 100pF at 0V	
31	SLCE15	6	Si	Aley	Transient suppressor;VR 15V;clamping volt 26.9V;CT 100pF at 0V	
32	SLCE15A	6	Si	Aley	Transient suppressor;VR 15V;clamping volt 24.4V;CT 100pF at 0V	
33	SLCE16	6	Si	Aley	Transient suppressor;VR 16V;clamping volt 28.8V;CT 100pF at 0V	
34	SLCE16A	6	Si	Aley	Transient suppressor;VR 16V;clamping volt 26V;CT100 pF at 0V	
35	SLCE17	6	Si	Aley	Transient suppressor;VR 17V;clamping volt 30.5V;CT 100 pF at 0V	
36	SLCE17A	6	Si	Aley	Transient suppressor;VR 17V;clamping volt 27.6V;CT 100pF at 0v	
37	SLCE18	6	Si	Aley	Transient suppressor;VR 18V;clamping volt 32.2V;CT 100pF at 0V	
38	SLCE18A	6	Si	Aley	Transient suppressor;VR 18V;clamping volt 29.2V;CT 100pF at 0V	
39	SLCE20	6	Si	Aley	Transient suppressor;VR 20V;clamping volt 35.8V;CT 100pF at 0V	
40	SLCE20A	6	Si	Aley	Transient suppressor;VR 20V;clamping volt 32.4V;CT 100pF at 0V	
41	SLCE22	6	Si	Aley	Transient suppressor;VR 22V;clamping volt 39.4V;CT 100pF at 0V	
42	SLCE22A	6	Si	Aley	Transient suppressor;VR 22V;clamping volt 35.5V;CT 100pF at 0V	
43	SLCE24	6	Si	Aley	Transient suppressor;VR 24V;clamping volt 43V;CT 100pF at 0V	
44	SLCE24A	6	Si	Aley	Transient suppressor;VR 24V;clamping volt 38.9V;CT 100pF at 0V	
45	SLCE26	6	Si	Aley	Transient suppressor;VR 26V;clamping volt 46.6V;CT 100pF at 0V	
46	SLCE26A	6	Si	Aley	Transient suppressor;VR 26V;clamping volt 42.1V;CT 100pF at 0V	
47	SLCE28	6	Si	Aley	Transient suppressor;VR 28V;clamping volt 50.1V;CT 100pF at 0V	
48	SLCE28A	6	Si	Aley	Transient suppressor;VR 28V;clamping volt 45.4V;CT 100pF at 0V	
49	SLCE30	6	Si	Aley	Transient suppressor;VR 30V;clamping volt 53.5V;CT 100pF at 0V	
50	SLCE30A	6	Si	Aley	Transient suppressor;VR 30V;clamping volt 48.4V;CT 100pF at 0V	
51	SLCE33	6	Si	Aley	Transient suppressor;VR 33V;clamping volt 59V;CT 100pF at 0V	
52	SLCE33A	6	Si	Aley	Transient suppressor;VR 33V;clamping volt 53.3V;CT 100pF at 0V	
53	SLCE36	6	Si	A1ey	Transient suppressor;VR 36V;clamping volt 64.3V;CT 100pF at 0V	
54	SLCE36A	6	Si	A1ey	Transient suppressor;VR 36V;clamping volt 58.1V;CT 100pF at 0V	
55	SLCE40	6	Si	A1ey	Transient suppressor;VR 40V;clamping volt 71.4V;CT 100pF att0V	
56	SLCE40A	6	Si	A1ey	Transient suppressor;VR 40V;clamping volt 64.5V;CT 100pF at 0V	N
57	SLCE43	6	Si	A1ey	Transient suppressor;VR 43V;clamping volt 76.7V;CT 100pF at 0V	
58	SLCE43A	6	Si	A1ey	Transient Suppressor;VR 43V;Clamping Volt 69.4V;CT 100pF at 0V	
59	SLCE45	6	Si	A1ey	Transient suppressor;VR 45V;clamping volt 80.3V;CT 100pF at 0V	
60	SLCE45A	6	Si	A1ey	Transient suppressor;VR 45V;clamping volt 72.7V;CT 100pF at 0V	
61	SLCE48	6	Si	A1ey	Transient suppressor;VR 48V;clamping volt 85.5V;CT 100pF at 0V	
62	SLCE48A	6	Si	A1ey	Transient suppressor;VR 48V;clamping volt 77.4V;CT 100pF at 0V	
63	SLCE51	6	Si	A1ey	Transient suppressor;VR 51V;clamping volt 91.1V;CT 100pF at 0V	
64	SLCE51A	6	Si	A1ey	Transient suppressor;VR 51V;clamping volt 82.4V;CT 100pF at 0V	
65	SLCE54	6	Si	A1ey	Transient suppressor;VR 54V;clamping volt 96.3V;CT 100pF at 0V	
66	SLCE54A	6	Si	A1ey	Transient suppressor;VR 54V;clamping volt 87.1V;CT 100pF at 0V	
67	SLCE58	6	Si	A1ey	Transient suppressor;VR 58V;clamping volt 103V;CT 100pF at 0V	
68	SLCE58A	6	Si	A1ey	Transient suppressor;VR 58V;clamping volt 93.6V;CT 100pF at 0V	
69	SLCE60	6	Si	A1ey	Transient suppressor;VR 60V;clamping volt 107V;CT 90pF at 0V	
70	SLCE60A	6	Si	A1ey	Transient suppressor;VR 60V;clamping volt 96.8V;CT 90pF at 0V	
71	SLCE64	6	Si	A1ey	Transient suppressor;VR 64V;clamping volt 114V;CT 90pF at 0V	
72	SLCE64A	6	Si	A1ey	Transient suppressor;VR 64V;clamping volt 103V;CT 90pF at 0V	
73	SLCE70	6	Si	A1ey	Transient suppressor;VR 70V;clamping volt 125V;CT 90pF at 0V	
74	SLCE70A	6	Si	A1ey	Transient suppressor;VR 70V;clamping volt 113V;CT 90pF at 0V	
75	SLCE75	6	Si	A1ey	Tramsoemt si*rressor;VR 75V;clamping volt 134V;CT 90pF at 0V	
76	SLCE75A	6	Si	A1ey	Tramsoemt si*rressor;VR 75V;clamping volt 121V;CT 90pF at 0V	
77	SLCE80	6	Si	A1ey	Transient suppressor;VR 80V;clamping volt 142V;CT 90pF at 0V	
78	SLCE80A	6	Si	A1ey	Transient suppressor;VR 80V;clamping volt 129V;CT 90pF at 0V	
79	SLCE90	6	Si	A1ey	Transient suppressor;VR 100V;clamping volt 160V;CT 90pF at 0V	
80	SLCE90A	6	Si	A1ey	Transient suppressor;VR 100V;clamping volt 146V;CT 90pF at 0V	
81	SLCE100	6	Si	A1ey	Transient suppressor;VR 110V;clamping volt 179V;CT 90pF at 0V	
82	SLCE100A	6	Si	A1ey	Transient suppressor;VR 110V;clamping volt 162V;CT 90pF att 0V	
83	SLCE110	6	Si	A1ey	Transient suppressor;VR 120V;clamping volt 196V;CT 90pF at 0V	
84	SLCE110A	6	Si	A1ey	Transient suppressor;VR 120V;clamping volt 178V;CT 90pF at 0V	
85	SLCE120	6	Si	A1ey	Transient suppressor;VR 130V;clamping volt 214V;CT 90pF at 0V	
86	SLCE120A	6	Si	A1ey	Transient suppressor;VR 130V;clamping volt 193V;CT 90pV at 0V	
87	SLCE130	6	Si	A1ey	Transient suppressor;VR 150V;Clamping volt 231V;CT 90pF at 0V	
88	SLCE130A	6	Si	A1ey	Transient suppressor;VR 150V;clamping volt 209V;CT 90pF at 0V	
89	SLCE150	6	Si	A1ey	Transient suppressor;VR 150V;clamping volt 268V;CT 90pF at 0V	
90	SLCE150A	6	Si	A1ey	Transient suppressor;VR 150V;clamping volt 243V;CT 90pF at 0V	
91	SLCE160	6	Si	A1ey	Transient suppressor;VR 160V;clamping volt 287V;CT 90pF at 0V	
92	SLCE160A	6	Si	A1ey	Transient suppressor;VR 160V;clamping volt 259V;CT 90pF at 0V	
93	SLCE170	6	Si	A1ey	Transient suppressor;VR 170V;clamping volt 304V;CT 90pF at 0V	
94	SLCE170A	6	Si	A1ey	Transient suppressor;VR 170V;clamping volt 275V;CT 90pF at 0V	
95	SR-2	6	Si	A407	VR 100V,max 400V/5.0mA;Io 300mA(cont),500mA(inst);Vf 1.1V/300mA;IR 100uA/100V	
96	SR-4	6	Si	A185g	Vr 200V;Max 800V at 5.0mA;Io 300mA(Cont)500mA(Inst);Vf 1.1V at 300mA;Ir 100uA at 200V	
97	SRB2	6	Si	M1210	VR 100Vmax 400V/5.0mA;Io 300mA(cont);500mA(inst);VF 1.1V/300mA IR 100uA/100V	
98	SRB4	6	Si	M1210	VR 200V max 800V/5.0mA;Io 300mA(cont);500mA(inst);VF 1.1V/300mA IR 100uA/200V	
99	SRB-2	6	Si		VR 100V MAX 400V/5.0mA,Io 300mA(cont);500mA(inst),Vf 1.1V/300mA IR 100uA/100V	
100	SRB-4	6	Si		VR 200V MAX 800V/5.0mA,Io 300mA(cont);500mA(inst),Vf 1.1V/300mA IR 100uA/200V	
101	SRF2	6	Si	M1211	VR 100V max 400V/5.0mA;Io 300mA(cont);500mA(inst);VF 1.1V/300mA IR 100uA/100V	
102	SRF4	6	Si	M1211	VR 200V max 800V/5.0mA;Io 300mA(cont);500mA(inst);VF 1.1V/300mA IR 100uA/200V	
103	SRF-2	6	Si		VR 100V MAX 400V/5.0mA,Io 300mA(cont);500mA(inst),VF 1.1V/300mA IR 100uA/100V	
104	SRF-4	6	Si		VR 200V MAX 800V/5.0mA,Io 300mA(cont);500mA(inst),Vf 1.1V/300mA IR 100uA/200V	
105	TS-7	6	Si	DO29	VR5.0;VClamp 7.6;IPP 30A;Pd 5.0W;IR 300uA	
106	TZV6.2	6	Si	A82h	BV 5.6-6.82V at IT200mA;VR5.04V;IR(surge)Max 525A;IR at VR20mA max;Max Clamp.Volt. 9.6V.	
107	TZV6.2A	6	Si	A82h	BV 5.89-6.51V at IT200mA;VR5.3V;IR(surge)Max 525A;IR at VR20mA max;Max Clamp.Volt. 9.1V.	
108	TZV6.8	6	Si	A82h	BV 6.12-7.48V at IT175mA;VR5.5V;IR(surge)Max 450A;IR at VR5.0mA max;Max Clamp.Volt. 10.8V.	
109	TZV6.8A	6	Si	A82h	BV 6.45-7.14V at IT175mA;VR5.8V;IR(surge)Max 450A;IR at VR5.0mA max;Max Clamp.Volt. 10.5V.	
110	TZV7.5	6	Si	A82h	BV 6.75-8.25V at IT175mA;VR6.05V;IR(surge)Max 400A;IR at VR1.0mA max;Max Clamp.Volt. 11.7V.	

SYMBOLS AND CODES EXPLAINED IN INTERPRETER

7. TRANSIENT SUPPRESSOR DIODES - Bipolar & Unipolar Types (Cont'd)

IN ORDER OF (1) TYPE (2) MAT AND (3) TYPE NO.

LINE No.	3 TYPE NUMBER	1 TYPE	2 MAT.	DWG. NO.	DESCRIPTION
1	TZV7.5A	6	Si	A82h	BV 7.13-7.88V at IT175mA;VR6.4V;IR(surge)Max 400A;IR at VR1.0mA max;Max Clamp.Volt. 11.3V.
2	TZV8.2	6	Si	A82h	BV 7.38-9.02V at IT150mA;VR6.63V;IR(surge)Max 400A;IR at VR1.0mA max;Max Clamp.Volt. 12.5V.
3	TZV8.2A	6	Si	A82h	BV 7.79-8.61V at IT150mA;VR7.02V;IR(surge)Max 400A;IR at VR1.0mA max;Max Clamp.Volt. 12.1V.
4	TZV9.1	6	Si	A82h	BV 8.19-10V at IT150mA;VR7.37V;IR(surge)Max 362A;IR at VR200uA max;Max Clamp.Volt. 13.8V.
5	TZV9.1A	6	Si	A82h	BV 8.65-9.55V at IT150mA;VR7.78V;IR(surge)Max 362A;IR at VR200uA max;Max Clamp.Volt. 13.4V.
6	TZV10	6	Si	A82h	BV 9.0-11V at IT125mA;VR8.1V;IR(surge)Max 333A;IR at VR 50uA max;Max Clamp.Volt. 15V.
7	TZV10A	6	Si	A82h	BV 9.5-10.5V at IT125mA;VR8.55V;IR(surge)Max 344A;IR at VR 50uA max;Max Clamp.Volt. 14.5V.
8	TZV11	6	Si	A82h	BV 9.9-12.1V at IT125mA;VR8.92V;IR(surge)Max 308A;IR at VR 10uA max;Max Clamp.Volt. 16.2V.
9	TZV11A	6	Si	A82h	BV 10.5-11.6V at IT125mA;VR9.40V;IR(surge)Max 320A;IR at VR10uA max;Max Clamp.Volt. 15.6V.
10	TZV12	6	Si	A82h	BV 10.8-13.2V at IT100mA;VR9.72V;IR(surge)Max 289A;IR at VR 5.0uA max;Max Clamp.Volt. 17.3V.
11	TZV12A	6	Si	A82h	BV 11.4-12.6V at IT100mA;VR10.2V;IR(surge)Max 299A;IR at VR 5.0uA max;Max Clamp.Volt. 16.7V.
12	TZV13	6	Si	A82h	BV 11.7-14.3V at IT100mA;VR10.5V;IR(surge)Max 263A;IR at VR 5.0uA max;Max Clamp.Volt. 19V.
13	TZV13A	6	Si	A82h	BV 12.4-13.7V at IT100mA;VR11.1V;IR(surge)Max 274A;IR at VR 5.0uA max;Max Clamp.Volt. 18.2V.
14	TZV15	6	Si	A82h	BV 13.5-16.5V at IT75mA;VR12.1V;IR(surge)Max 227A;IR at VR 5.0uA max;Max Clamp.Volt. 22V.
15	TZV15A	6	Si	A82h	BV 14.3-15.8V at IT75mA;VR12.8V;IR(surge)Max 235A;IR at VR 5.0uA max;Max Clamp.Volt. 21.2V.
16	TZV16	6	Si	A82h	BV 14.4-17.6V at IT70mA;VR12.9V;IR(surge)Max 212A;IR at VR 5.0uA max;Max Clamp.Volt. 23.5V.
17	TZV16A	6	Si	A82h	BV 15.2-16.8V at IT70mA;VR13.6V;IR(surge)Max 222A;IR at VR 5.0uA max;Max Clamp.Volt. 22.5V.
18	TZV18	6	Si	A82h	BV 16.2-19.8V at IT 65mA;VR 14.5V;IR(surge)max 188A;IR at 5.0uA max;Max Clamp Volt. 26.5V.
19	TZV18A	6	Si	A82h	BV 17.1-18.9V at IT65mA;VR15.3V;IR(surge)Max 198A;IR at VR 5.0uA max;Max Clamp.Volt. 25.2V.
20	TZV20	6	Si	A82h	BV 18-22V at IT65mA;VR16.2V;IR(surge)Max 171A;IR at VR 5.0uA max;Max Clamp.Volt. 29.1V.
21	TZV20A	6	Si	A82h	BV19-21V at IT 65mA;VR 17.1V;IR(surge)max 180A;IR at VR 5.0uA max;Max Clamp Volt. 27.7V.
22	TZV22	6	Si	A82h	BV 19.8-24.2V at IT50mA;VR17.8V;IR(surge)Max 156A;IR at VR 5.0uA max;Max Clamp.Volt. 31.9V.
23	TZV22A	6	Si	A82h	BV 20.9-23.1V at IT50mA;VR18.8V;IR(surge)Max 163A;IR at VR 5.0uA max;Max Clamp.Volt. 30.6V.
24	TZV24	6	Si	A82h	BV 21.6-26.4V at IT50mA;VR19.4V;IR(surge)Max 144A;IR at VR 5.0uA max;Max Clamp.Volt. 34.7V.
25	TZV24A	6	Si	A82h	BV 22.8-25.2V at IT50mA;VR20.5V;IR(surge)Max 150A;IR at VR 5.0uA max;Max Clamp.Volt. 33.2V.
26	TZV27	6	Si	A82h	BV 24.3-29.7V at IT50mA;VR21.8V;IR(surge)Max 127A;IR at VR 5.0uA max;Max Clamp.Volt. 39.1V.
27	TZV27A	6	Si	A82h	BV 25.7-28.4V at IT50mA;VR23.1V;IR(surge)Max 133A;IR at VR 5.0uA max;Max Clamp.Volt. 37.5V.
28	TZV30	6	Si	A82h	BV 27-33V at IT40mA;VR24.3V;IR(surge)Max 114A;IR at VR 5.0uA max;Max Clamp.Volt. 43.5V.
29	TZV30A	6	Si	A82h	BV 28.5-31.5V at IT40mA;VR25.6V;IR(surge)Max 120A;IR at VR 5.0uA max;Max Clamp.Volt. 41.4V.
30	TZV33	6	Si	A82h	BV 29.7-36.3V at IT40mA;VR26.8V;IR(surge)Max 104A;IR at VR 5.0uA max;Max Clamp.Volt. 47.7V.
31	TZV33A	6	Si	A82h	BV 31.4-34.7V at IT40mA;VR28.2V;IR(surge)Max 109A;IR at VR 5.0uA max;Max Clamp.Volt. 45.7V.
32	TZV36	6	Si	A82h	BV 32.4-39.6V at IT30mA;VR29.1V;IR(surge)Max 96A;IR at VR 5.0uA max;Max Clamp.Volt. 52V.
33	TZV36A	6	Si	A82h	BV 34.2-37.8V at IT30mA;VR30.8V;IR(surge)Max 100A;IR at VR 5.0uA max;Max Clamp.Volt. 49.9V.
34	TZV39	6	Si	A82h	BV 35.1-42.9V at IT30mA;VR31.6V;IR(surge)Max 88A;IR at VR 5.0uA max;Max Clamp.Volt. 56.4V.
35	TZV39A	6	Si	A82h	BV 37.1-41V at IT30mA;VR33.3V;IR(surge)Max 92A;IR at VR 5.0uA max;Max Clamp.Volt. 53.9V.
36	TZV43	6	Si	A82h	BV 38.7-47.3V at IT30mA;VR34.8V;IR(surge)Max 80A;IR at VR 5.0uA max;Max Clamp.Volt. 61.9V.
37	TZV43A	6	Si	A82h	BV 40.9-45.2V at IT30mA;VR36.8V;IR(surge)Max 84A;IR at VR 5.0uA max;Max Clamp.Volt. 59.3V.
38	TZV47	6	Si	A82h	BV 42.3-51.7V at IT25mA;VR38.1V;IR(surge)Max 73A;IR at VR 5.0uA max;Max Clamp.Volt. 67.8V.
39	TZV47A	6	Si	A82h	BV 44.7-49.4V at IT25mA;VR40.2V;IR(surge)Max 77A;IR at VR 5.0uA max;Max Clamp.Volt. 64.8V.
40	TZV51	6	Si	A82h	BV 45.9-56.1V at IT25mA;VR41.3V;IR(surge)Max 68A;IR at VR 5.0uA max;Max Clamp.Volt. 73.5V.
41	TZV51A	6	Si	A82h	BV 48.5-53.6V at IT25mA;VR43.6V;IR(surge)Max 71A;IR at VR 5.0uA max;Max Clamp.Volt. 70.1V.
42	TZV56	6	Si	A82h	BV 50.4-61.6V at IT20mA;VR45.4V;IR(surge)Max 62A;IR at VR 5.0uA max;Max Clamp.Volt. 80.5V.
43	TZV56A	6	Si	A82h	BV 53.2-58.8V at IT20mA;VR47.8V;IR(surge)Max 64A;IR at VR 5.0uA max;Max Clamp.Volt. 77V.
44	TZV62	6	Si	A82h	BV 55.8-68.2V at IT20mA;VR50.2V;IR(surge)Max 56A;IR at VR 5.0uA max;Max Clamp.Volt. 89V.
45	TZV62A	6	Si	A82h	BV 58.9-65.1V at IT20mA;VR53V;IR(surge)Max 58A;IR at VR 5.0uA max;Max Clamp.Volt. 85V.
46	TZV68	6	Si	A82h	BV 61.2-74.8V at IT20mA;VR55.1V;IR(surge)Max 51A;IR at VR 5.0uA max;Max Clamp.Volt. 98V.
47	TZV68A	6	Si	A82h	BV 64.6-71.4V at IT20mA;VR 58.1V;IR(surge)Max 54A;IR at VR 5.0uA max;Max Clamp.Volt. 92V.
48	TZV75	6	Si	A82h	BV 67.5-82.5V at IT20mA;VR60.7V;IR(surge)Max 46A;IR at VR 5.0uA max;Max Clamp.Volt. 108V.
49	TZV75A	6	Si	A82h	BV 71.3-78.8V at IT20mA;VR64.1V;IR(surge)Max 48A;IR at VR 5.0uA max;Max Clamp.Volt. 103V.
50	TZV82	6	Si	A82h	BV 73.8-90.2V at IT15mA;VR66.4V;IR(surge)Max 42A;IR at VR 5.0uA max;Max Clamp.Volt. 118V.
51	TZV82A	6	Si	A82h	BV 77.9-86.1V at IT15mA;VR70.1V;IR(surge)Max 44A;IR at VR 5.0uA max;Max Clamp.Volt. 113V.
52	TZV91	6	Si	A82h	BV 81.9-100V at IT15mA;VR73.7V;IR(surge)Max 38A;IR at VR 5.0uA max;Max Clamp.Volt. 131V.
53	TZV91A	6	Si	A82h	BV 86.5-95.5V at IT15mA;VR77.8V;IR(surge)Max 40A;IR at VR 5.0uA max;Max Clamp.Volt. 125V.
54	TZV100	6	Si	A82h	BV 90-110V at IT12mA;VR81V;IR(surge)Max 34A;IR at VR 5.0uA max;Max Clamp.Volt. 144V.
55	TZV100A	6	Si	A82h	BV 95-105V at IT12mA;VR85.5V;IR(surge)Max 36A;IR at VR 5.0uA max;Max Clamp.Volt. 137V.
56	TZV110	6	Si	A82h	BV99-121V at IT12mA;VR89.2V;IR(surge)Max 158A;IR at VR 5.0uA max;Max Clamp.Volt. 158V.
57	TZV110A	6	Si	A82h	BV 105-116V at IT12mA;VR94V;IR(surge)Max 152A;IR at VR 5.0uA max;Max Clamp.Volt. 152V.
58	TZV120	6	Si	A82h	BV 108-132V at IT10mA;VR97.2V;IR(surge)Max 173A;IR at VR 5.0uA max;Max Clamp.Volt. 173V.
59	TZV120A	6	Si	A82h	BV 114-126V at IT10mA;VR102V;IR(surge)Max 165A;IR at VR 5.0uA max;Max Clamp.Volt. 165V.
60	TZV130	6	Si	A82h	BV 117-143V at IT10mA;VR105V;IR(surge)Max 187A;IR at VR 5.0uA max;Max Clamp.Volt. 187V.
61	TZV130A	6	Si	A82h	BV 124-137V at IT10mA;VR111V;IR(surge)Max 179A;IR at VR 5.0uA max;Max Clamp.Volt. 179V.
62	TZV150	6	Si	A82h	BV 135-165V at IT8.0mA;VR121V;IR(surge)Max 215A;IR at VR 5.0uA max;Max Clamp.Volt. 215V.
63	TZV150A	6	Si	A82h	BV 143-158V at IT8.0mA;VR128V;IR(surge)Max 207A;IR at VR 5.0uA max;Max Clamp.Volt. 207V.
64	TZV160	6	Si	A82h	BV 144-176V at IT8.0mA;VR130V;IR(surge)Max 230A;IR at VR 5.0uA max;Max Clamp.Volt. 230V.
65	TZV160A	6	Si	A82h	BV 152-168V at IT8.0mA;VR136V;IR(surge)Max 219A;IR at VR 5.0uA max;Max Clamp.Volt. 219V.
66	TZV170	6	Si	A82h	BV 153-187V at IT5.0mA;VR138V;IR(surge)Max 244A;IR at VR 5.0uA max;Max Clamp.Volt. 244V.
67	TZV170A	6	Si	A82h	BV 162-179V at IT5.0mA;VR145V;IR(surge)Max 234A;IR at VR 5.0uA max;Max Clamp.Volt. 234V.
68	TZV180	6	Si	A82h	BV 162-198V at IT5.0mA;VR146V;IR(surge)Max 258A;IR at VR 5.0uA max;Max Clamp.Volt. 258V.
69	TZV180A	6	Si	A82h	BV 171-189V at IT5.0mA;VR154V;IR(surge)Max 246A;IR at VR 5.0uA max;Max Clamp.Volt. 246V.
70	TZV200	6	Si	A82h	BV 180-220V at IT5.0mA;VR162V;IR(surge)Max 287A;IR at VR 5.0uA max;Max Clamp.Volt. 287V.
71	TZV200A	6	Si	A82h	BV 190-210V at IT5.0mA;VR171V;IR(surge)Max 274A;IR at VR 5.0uA max;Max Clamp.Volt. 274V.
72♦	ZP1009	6	Si Δ	A1aao	VRM 7.37V;VBR 8.19-10.0V at It1.0mA;IR 50uA;Vc 13.5V at IRSM 44.4A;BiDi
73	ZP1009A	6	Si Δ	A1aao	VRM 7.78V;VBR 8.65-9.55V at It 1.0mA;IR 50uA;Vc 12.9V at IRSM 46.5A;BiDi
74	ZP1010	6	Si Δ	A1aao	VRM 8.10V;VBR 9.00-11.0V at It 1.0mA;IR 10uA;Vc 14.9V at IRSM 40.3A;BiDi
75	ZP1010A	6	Si Δ	A1aao	VRM 8.55V;VBR 9.50-10.5V at It 1.0mA;IR 10uA;Vc 14.2V at IRSM 42.3A;BiDi
76	ZP1011	6	Si Δ	A1aao	VRM 8.92V;VBR 9.90-12.1V at It 1.0mA;IR 5.0uA;Vc 16.3V at IRSM 36.8A;BiDi
77	ZP1011A	6	Si Δ	A1aao	VRM 9.40V;VBR 10.5-11.6V at It 1.0mA;IR 5.0uA;Vc 15.7V at IRSM 38.2A;BiDi
78	ZP1012	6	Si Δ	A1aao	VRM 9.72V;VBR 10.8-13.20V at It 1.0mA;IR 5.0uA;Vc 17.80V at IRSM 33.7A;BiDi
79♦	ZP1012A	6	Si Δ	A1aao	VRM 10.2V;VBR 11.4-12.6V at It1.0mA;IR 5.0uA;Vc 17.0V at IRSM 35.3A;BiDi
80	ZP1013	6	Si Δ	A1aao	VRM 10.5V;VBR 11.7-14.3V at It 1.0mA;IR 5.0uA;Vc 19.3V at IRSM 31.1A;BiDi
81	ZP1013A	6	Si Δ	A1aao	VRM 11.10V;VBR 12.4-13.7V at It 1.0mA;IR 5.0uA;Vc 18.5V at IRSM 32.4A;BiDi
82♦	ZP1015	6	Si Δ	A1aao	VRM 12.1V;VBR 13.5-16.5V at It1.0mA;IR 5.0uA;Vc 22.3V at IRSM 26.9A;BiDi
83	ZP1015A	6	Si Δ	A1aao	VRM 12.8V;VBR 14.3-15.8V at It 1.0mA;IR 5.0uA;Vc 21.3V at IRSM 28.2A;BiDi
84	ZP1016	6	Si Δ	A1aao	VRM 12.9V;VBR 14.4-17.6V at It 1.0mA;IR 5.0uA;Vc 23.8V at IRSM 25.2A;BiDi
85	ZP1016A	6	Si Δ	A1aao	VRM 13.6V;VBR 15.2-16.6V at It 1.0mA;IR 5.0uA;Vc 23.8V at IRSM 25.2A;BiDi
86	ZP1018	6	Si Δ	A1aao	VRM 14.50V;VBR 16.2-19.80V at It 1.0mA;IR 5.0uA;Vc 26.70V at IRSM 22.5A;BiDi
87	ZP1018A	6	Si Δ	A1aao	VRM 15.3V;VBR 17.1-18.9V at It 1.0mA;IR 5.0uA;Vc 25.5V at IRSM 23.5A;BiDi
88	ZP1020	6	Si Δ	A1aao	VRM 16.2V;VBR 18.0-22.0V at It 1.0mA;IR 5.0uA;Vc 29.7V at IRSM 20.2A;BiDi
89	ZP1020A	6	Si Δ	A1aao	VRM 17.1V;VBR 19.0-21.0V at It 1.0mA;IR 5.0uA;Vc 28.4V at IRSM 21.1A;BiDi
90	ZP1022	6	Si Δ	A1aao	VRM 17.8V;VBR 19.8-24.2V at It 1.0mA;IR 5.0uA;Vc 32.7V at IRSM 18.3A;BiDi
91	ZP1022A	6	Si Δ	A1aao	VRM 18.8V;VBR 20.9-23.1V at It 1.0mA;IR 5.0uA;Vc 31.2V at IRSM 19.2A;BiDi
92	ZP1024	6	Si Δ	A1aao	VRM 19.4V;VBR 21.6-26.4V at It 1.0mA;IR 5.0uA;Vc 35.6V at IRSM 16.9A;BiDi
93	ZP1024A	6	Si Δ	A1aao	VRM 20.5V;VBR 22.8-25.2V at It 1.0mA;IR 5.0uA;Vc 34.0V at IRSM 17.6A;BiDi
94	ZP1027	6	Si Δ	A1aao	VRM 21.80V;VBR 24.3-29.70V at It 1.0mA;IR 5.0uA;Vc 40.10V at IRSM 15.0A;BiDi
95	ZP1027A	6	Si Δ	A1aao	VRM 23.1V;VBR 25.7-28.4V at It 1.0mA;IR 5.0uA;Vc 38.3V at IRSM 15.7A;BiDi
96	ZP1030	6	Si Δ	A1aao	VRM 24.33V;VBR 27.0-33.0V at It 1.0mA;IR 5.0uA;Vc 44.5V at IRSM 13.5A;BiDi
97	ZP1030A	6	Si Δ	A1aao	VRM 25.6V;VBR 28.5-31.5V at It 1.0mA;IR 5.0uA;Vc 42.5V at IRSM 14.1A;BiDi
98	ZP1033	6	Si Δ	A1aao	VRM 26.8V;VBR 29.7-36.3V at It 1.0mA;IR 5.0uA;Vc 49.0V at IRSM 12.2A;BiDi
99	ZP1033A	6	Si Δ	A1aao	VRM 28.2V;VBR 31.4-34.7V at It 1.0mA;IR 5.0uA;Vc 46.8V at IRSM 12.8A;BiDi
100	ZP1036	6	Si Δ	A1aao	VRM 29.1V;VBR 32.4-39.60V at It 1.0mA;IR 5.0uA;Vc 53.40V at IRSM 11.2A;BiDi
101	ZP1036A	6	Si Δ	A1aao	VRM 30.8V;VBR 34.2-37.8V at It 1.0mA;IR 5.0uA;Vc 51.0V at IRSM 11.8A;BiDi
102	ZP1039	6	Si Δ	A1aao	VRM 31.6V;VBR 35.1-42.9V at It 1.0mA;IR 5.0uA;Vc 58.0V at IRSM 10.3A;BiDi
103	ZP1039A	6	Si Δ	A1aao	VRM 33.3V;VBR 37.1-41.0V at It 1.0mA;IR 5.0uA;Vc 55.3V at IRSM 10.8A;BiDi
104	ZP1043A	6	Si Δ	A1aao	VRM 36.8V;VBR 40.9-45.2V at It 1.0mA;IR 5.0uA;Vc 61.0V at IRSM 9.80A;BiDi
105	ZP1047	6	Si Δ	A1aao	VRM 38.1V;VBR 42.3-51.7V at It 1.0mA;IR 5.0uA;Vc 69.8V at IRSM 8.60A;BiDi
106	ZP1047A	6	Si Δ	A1aao	VRM 40.2V;VBR 44.7-49.4V at It 1.0mA;IR 5.0uA;Vc 66.7V at IRSM 9.00A;BiDi
107	ZP1051	6	Si Δ	A1aao	VRM 41.3V;VBR 45.9-56.1V at It 1.0mA;IR 5.0uA;Vc 75.3V at IRSM 8.00A;BiDi
108	ZP1051A	6	Si Δ	A1aao	VRM 43.6V;VBR 48.5-53.6V at It 1.0mA;IR 5.0uA;Vc 72.3V at IRSM 8.30A;BiDi
109	ZP1056	6	Si Δ	A1aao	VRM 45.5V;VBR 50.4-61.60V at It 1.0mA;IR 5.0uA;Vc 83.10V at IRSM 7.2A;BiDi
110	ZP1056A	6	Si Δ	A1aao	VRM 47.8V;VBR 53.2-58.8V at It 1.0mA;IR 5.0uA;Vc 79.4V at IRSM 7.55A;BiDi

IN ORDER OF (1) TYPE (2) MAT AND (3) TYPE NO.

LINE No.	3 TYPE NUMBER	1 TYPE	2 MAT.	DWG. NO.	DESCRIPTION
1	ZP1062	6	Si Δ	A1aao	VRM 50.2V;VBR 55.8-68.20V at It 1.0mA;IR 5.0uA;Vc 92.0V at IRSM 6.52A;BiDi
2	ZP1062A	6	Si Δ	A1aao	VRM 53.0V;VBR 58.9-65.1V at It 1.0mA;IR 5.0uA;Vc 87.0V at IRSM 6.89A;BiDi
3	ZP1068	6	Si Δ	A1aao	VRM 55.10V;VBR 61.2-74.8V at It 1.0mA;IR 5.0uA;Vc 101.0V at IRSM 5.94A;BiDi
4	ZP1068A	6	Si Δ	A1aao	VRM 58.1V;VBR 64.6-71.4V at It 1.0mA;IR 5.0uA;Vc 96.0V at IRSM 6.25A;BiDi
5	ZP1075	6	Si Δ	A1aao	VRM 60.7V;VBR 67.5-82.5V at It 1.0mA;IR 5.0uA;Vc 111.0V at IRSM 5.41A;BiDi
6	ZP1075A	6	Si Δ	A1aao	VRM 64.1V;VBR 71.3-78.8V at It 1.0mA;IR 5.0uA;Vc 106.0V at IRSM 5.66A;BiDi
7	ZP1082	6	Si Δ	A1aao	VRM 66.4V;VBR 73.8-90.2V at It 1.0mA;IR 5.0uA;Vc 121.0V at IRSM 4.95A;BiDi
8	ZP1082A	6	Si Δ	A1aao	VRM 70.1V;VBR 77.9-86.1V at It 1.0mA;IR 5.0uA;Vc 116.0V at IRSM 5.17A;BiDi
9	ZP1091	6	Si Δ	A1aao	VRM 73.7V;VBR 81.9-100.0V at it 1.0mA;IR 5.0uA;Vc 135.0V at IRSM 4.44A;BiDi
10	ZP1091A	6	Si Δ	A1aao	VRM 77.8V;VBR 86.5-95.5V at It 1.0mA;IR 5.0uA;Vc 128.3V at IRSM 4.68A;BiDi
11	ZP1100	6	Si Δ	A1aao	VRM 81.0V;VBR 90.0-110.0V at It 1.0mA;IR 5.0uA;Vc 148.1V at IRSM 4.05A;BiDi
12	ZP1100A	6	Si Δ	A1aao	VRM 85.5V;VBR 95.0-105.0V at It 1.0mA;IR 5.0uA;Vc 141.0V at IRSM 4.25A;BiDi
13	ZP1110	6	Si Δ	A1aao	VRM 89.0V;VBR 99.0-121.0V at It 1.0mA;IR 5.0uA;Vc 163.0V at IRSM 3.68A;BiDi
14	ZP1110A	6	Si Δ	A1aao	VRM 94.0V;VBR 105.0-116.0V at It 1.0mA;IR 5.0uA;Vc 156.0V at IRSM 3.84A;BiDi
15	ZP1120	6	Si Δ	A1aao	VRM 97.0V;VBR 108-132.0V at It 1.0mA;IR 5.0uA;Vc 178.0V at IRSM 3.37A;BiDi
16	ZP1120A	6	Si Δ	A1aao	VRM 102.0V;VBR 114.0-126.0V at It 1.0mA;IR 5.0uA;Vc 170.0V at IRSM 3.53A;BiDi
17	ZP1130	6	Si Δ	A1aao	VRM 105.0V;VBR 117.0-143.0V at It 1.0mA;IR 5.0uA;Vc 193.0V at IRSM 3.11A;BiDi
18	ZP1130A	6	Si Δ	A1aao	VRM 111.0V;VBR 124.0-137.0V at It 1.0mA;IR 5.0uA;Vc 184.0V at IRSM 3.26A;BiDi
19	ZP1140	6	Si Δ	A1aao	VBR 154; Ir Max 5.0u at VR 113V; Irms 10mA; Temp Jmax 175°C
20	ZP1150	6	Si Δ	A1aao	VRM 121.0V;VBR 135.0-165.0V at It 1.0mA;IR 5.0uA;Vc 222.0V at IRSM 2.70A;BiDi
21	ZP1150A	6	Si Δ	A1aao	VRM 128.0V;VBR 143.0-158.0V at It 1.0mA;IR 5.0uA;Vc 213.0V at IRSM 2.81A;BiDi
22	ZP1160	6	Si Δ	A1aao	VRM 130.0V;VBR 144.0-176.0V at It 1.0mA;IR 5.0uA;Vc 237.0V at IRSM 2.53A;BiDi
23	ZP1160A	6	Si Δ	A1aao	VRM 136.0V;VBR 152.0-168.0V at It 1.0mA;IR 5.0uA;Vc 226.0V at IRSM 2.65A;BiDi
24	ZP1170	6	Si Δ	A1aao	VRM 138.0V;VBR 153.0-187.0V at It 1.0mA;IR 5.0uA;Vc 252.0V at IRSM 2.38A;BiDi
25	ZP1170A	6	Si Δ	A1aao	VRM 145.0V;VBR 162.0-179.0V at It 1.0mA;IR 5.0uA;Vc 241.0V at IRSM 2.48A;BiDi
26	ZP1180	6	Si Δ	A1aao	VRM 146.0V;VBR 162-198.0V at It 1.0mA;IR 5.0uA;Vc 267V at IRSM 2.24A;BiDi
27	ZP1180A	6	Si Δ	A1aao	VRM 154.0V;VBR 171.0-189.0V at It 1.0mA;IR 5.0uA;Vc 255.0V at IRSM 2.35A;BiDi
28	ZP1200	6	Si Δ	A1aao	VRM 162.0V;VBR 180.0-220.0V at It 1.0mA;IR 5.0uA;Vc 297.0V at IRSM 2.02A;BiDi
29	ZP1200A	6	Si Δ	A1aao	VRM 171.0V;VBR 190.0-210.0V at It 1.0mA;IR 5.0uA;Vc 283.0V at IRSM 2.12A;BiDi
30	ZP1220	6	Si Δ	A1aao	VRM 175.0V;VBR 198-242.0V at It 1.0mA;IR 5.0uA;Vc 326.0V at IRSM 1.84A;BiDi
31	ZP1220A	6	Si Δ	A1aao	VRM 185.0V;VBR 209.0-231.0V at It 1.0mA;IR 5.0uA;Vc 311.0V at IRSM 1.92A;BiDi
32	ZP1250	6	Si Δ	A1aao	VRM 202.0V;VBR 225.0-275.0V at It 1.0mA;IR 5.0uA;Vc 371.0V at IRSM 1.62A;BiDi
33	ZP1250A	6	Si Δ	A1aao	VRM 214.0V;VBR 237.0-263.0V at It 1.0mA;IR 5.0uA;Vc 355.0V at IRSM 1.69A;BiDi
34	ZP1275A	6	Si Δ	A1aao	VRM 235.0V;VBR 261.3-288.8V at It 1.0mA;IR 5.0uA;Vc 389.0V at IRSM 1.54A;BiDi
35♦	ZP2009	6	Si Δ	A1aap	VRM 7.37V;VBA8.19-10.0V at It1.0mA;IR 50uA;Vc 13.0V at IRSM 138.5A;BiDi
36	ZP2009A	6	Si Δ	A1aap	VRM 7.78V;VBR 8.65-9.55V at It 1.0mA;IR 50uA;Vc 12.4V at IRSM 145.0A;BiDi
37	ZP2010	6	Si Δ	A1aap	VRM 8.10V;VBR 9.00-11.0V at It 1.0mA;IR 10uA;Vc 14.3V at IRSM 126.0A;BiDi
38	ZP2010A	6	Si Δ	A1aap	VRM 8.55V;VBR 9.50-10.5V at It 1.0mA;IR 10uA;Vc 13.7V at IRSM 132.0A;BiDi
39	ZP2011	6	Si Δ	A1aap	VRM 8.92V;VBR 9.90-12.1V at It 1.0mA;IR 5.0uA;Vc 15.7V at IRSM 114.0A;BiDi
40	ZP2011A	6	Si Δ	A1aap	VRM 9.40V;VBR 10.5-11.6V at It 1.0mA;IR 5.0uA;Vc 15.1V at IRSM 119.0A;BiDi
41	ZP2012A	6	Si Δ	A1aap	VRM 10.2V;VBR 11.4-12.6V at It 1.0mA;IR 5.0uA;Vc 16.4V at IRSM 110.0A;BiDi
42	ZP2013	6	Si Δ	A1aap	VRM 10.5V;VBR 11.7-14.3V at It 1.0mA;IR 5.0uA;Vc 18.6V at IRSM 97.0A;BiDi
43	ZP2013A	6	Si Δ	A1aap	VRM 11.1V;VBR 12.4-13.7V at It 1.0mA;IR 5.0uA;Vc 17.8V at IRSM 101.0A;BiDi
44	ZP2015	6	Si Δ	A1aap	VRM 12.1V;VBR 13.5-16.5V at It 1.0mA;IR 5.0uA;Vc 21.5V at IRSM 84.0A;BiDi
45	ZP2015A	6	Si Δ	A1aap	VRM 12.8V;VBR 14.3-15.8V at It 1.0mA;IR 5.0uA;Vc 20.5V at IRSM 88.0A;BiDi
46	ZP2016	6	Si Δ	A1aap	VRM 12.9V;VBR 14.4-17.6V at It 1.0mA;IR 5.0uA;Vc 22.9V at IRSM 79.0A;BiDi
47	ZP2016A	6	Si Δ	A1aap	VRM 13.6V;VBR 15.2-16.8V at It 1.0mA;IR 5.0uA;Vc 21.8V at IRSM 82.0A;BiDi
48	ZP2018A	6	Si Δ	A1aap	VRM 15.3V;VBR 17.1-18.9V at It 1.0mA;IR 5.0uA;Vc 24.6V at IRSM 73.0A;BiDi
49	ZP2020	6	Si Δ	A1aap	VRM 16.2V;VBR 18.0-22.0V at It 1.0mA;IR 5.0uA;Vc 28.6V at IRSM 63.0A;BiDi
50	ZP2020A	6	Si Δ	A1aap	VRM 17.1V;VBR 19.0-21.0V at It 1.0mA;IR 5.0uA;Vc 27.3V at IRSM 66.0A;BiDi
51	ZP2022	6	Si Δ	A1aap	VRM 17.8V;VBR 19.8-24.2V at It 1.0mA;IR 5.0uA;Vc 31.5V at IRSM 57.0A;BiDi
52	ZP2022A	6	Si Δ	A1aap	VRM 18.8V;VBR 20.9-23.10V at It 1.0mA;IR 5.0uA;Vc 30.0V at IRSM 60.0A;BiDi
53	ZP2024	6	Si Δ	A1aap	VRM 19.4V;VBR 21.6-26.4V at It 1.0mA;IR 5.0uA;Vc 34.0V at IRSM 52.5A;BiDi
54	ZP2024A	6	Si Δ	A1aap	VRM 20.5V;VBR 22.8-25.2V at It 1.0mA;IR 5.0uA;Vc 32.8V at IRSM 52.5A;BiDi
55	ZP2027A	6	Si Δ	A1aap	VRM 23.1V;VBR 25.7-28.4V at It 1.0mA;IR 5.0uA;Vc 36.9V at IRSM 49.0A;BiDi
56	ZP2030	6	Si Δ	A1aap	VRM 24.33V;VBR 27.0-33.0V at It 1.0mA;IR 5.0uA;Vc 42.9V at IRSM 42.0A;BiDi
57	ZP2030A	6	Si Δ	A1aap	VRM 25.6V;VBR 28.5-31.5V at It 1.0mA;IR 5.0uA;Vc 40.9V at IRSM 44.0A;BiDi
58	ZP2033	6	Si Δ	A1aap	VRM 26.8V;VBR 29.7-36.3V at It 1.0mA;IR 5.0uA;Vc 47.2V at IRSM 38.0A;BiDi
59	ZP2033A	6	Si Δ	A1aap	VRM 28.2V;VBR 31.4-34.7V at It 1.0mA;IR 5.0uA;Vc 45.1V at IRSM 40.0A;BiDi
60	ZP2036A	6	Si Δ	A1aap	VRM 30.8V;VBR 34.2-37.8V at It 1.0mA;IR 5.0uA;Vc 49.1V at IRSM 36.5A;BiDi
61	ZP2039	6	Si Δ	A1aap	VRM 31.6V;VBR 35.1-42.9V at It 1.0mA;IR 5.0uA;Vc 55.8V at IRSM 32.3A;BiDi
62	ZP2039A	6	Si Δ	A1aap	VRM 33.3V;VBR 37.1-41.0V at It 1.0mA;IR 5.0uA;Vc 53.3V at IRSM 33.8A;BiDi
63	ZP2043	6	Si Δ	A1aap	VRM 34.8V;VBR 38.7-47.3V at It 1.0mA;IR 5.0uA;Vc 61.5V at IRSM 29.3A;BiDi
64	ZP2043A	6	Si Δ	A1aap	VRM 36.8V;VBR 40.9-45.2V at It 1.0mA;IR 5.0uA;Vc 58.8V at IRSM 30.6A;BiDi
65	ZP2047	6	Si Δ	A1aap	VRM 38.1V;VBR 42.3-51.7V at It 1.0mA;IR 5.0uA;Vc 67.2V at IRSM 26.8A;BiDi
66	ZP2047A	6	Si Δ	A1aap	VRM 40.2V;VBR 44.7-49.4V at It 1.0mA;IR 5.0uA;Vc 64.2V at IRSM 28.0A;BiDi
67	ZP2051	6	Si Δ	A1aap	VRM 41.3V;VBR 45.9-56.1V at It 1.0mA;IR 5.0uA;Vc 72.9V at IRSM 24.7A;BiDi
68	ZP2051A	6	Si Δ	A1aap	VRM 43.6V;VBR 48.5-53.6V at It 1.0mA;IR 5.0uA;Vc 69.7V at IRSM 25.8A;BiDi
69	ZP2056A	6	Si Δ	A1aap	VRM 47.8V;VBR 53.2-58.8V at It 1.0mA;IR 5.0uA;Vc 76.4V at IRSM 23.5A;BiDi
70	ZP2062A	6	Si Δ	A1aap	VRM 53.0V;VBR 58.9-65.1V at It 1.0mA;IR 5.0uA;Vc 84.0V at IRSM 21.4A;BiDi
71	ZP2068A	6	Si Δ	A1aap	VRM 58.1V;VBR 64.6-71.4V at It 1.0mA;IR 5.0uA;Vc 93.0V at IRSM 19.4A;BiDi
72♦	ZP2075	6	Si Δ	A1aap	VRM 60.7V;VBR 67.5-82.5V at It1.0mA;IR 5.0uA;Vc 107.0V at IRSM 16.8A;BiDi
73	ZP2075A	6	Si Δ	A1aap	VRM 64.1V;VBR 71.3-78.8V at It 1.0mA;IR 5.0uA;Vc 102.0V at IRSM 17.6A;BiDi
74	ZP2082	6	Si Δ	A1aap	VRM 66.4V;VBR 73.8-90.2V at It 1.0mA;IR 5.0uA;Vc 117.0V at IRSM 15.4A;BiDi
75	ZP2082A	6	Si Δ	A1aap	VRM 70.1V;VBR 77.9-86.1V at It 1.0mA;IR 5.0uA;Vc 111.0V at IRSM 16.2A;BiDi
76	ZP2091	6	Si Δ	A1aap	VRM 73.7V;VBR 81.9-100.0V at It 1.0mA;IR 5.0uA;Vc 130.0V at IRSM 13.8A;BiDi
77	ZP2091A	6	Si Δ	A1aap	VRM 77.8V;VBR 86.5-95.5V at It 1.0mA;IR 5.0uA;Vc 124.0V at IRSM 14.5A;BiDi
78	ZP2100	6	Si Δ	A1aap	VRM 81.0V;VBR 90.0-110.0V at It 1.0mA;IR 5.0uA;Vc 143.0V at IRSM 12.6A;BiDi
79	ZP2100A	6	Si Δ	A1aap	VRM 85.5V;VBR 95.0-105.0V at It 1.0mA;IR 5.0uA;Vc 136.0V at IRSM 13.2A;BiDi
80	ZP2110	6	Si Δ	A1aap	VRM 89.0V;VBR 99.0-121.0V at It 1.0mA;IR 5.0uA;Vc 157.0V at IRSM 11.4A;BiDi
81	ZP2110A	6	Si Δ	A1aap	VRM 94.0V;VBR 105.0-116.0V at It 1.0mA;IR 5.0uA;Vc 150.0V at IRSM 12.0A;BiDi
82	ZP2120A	6	Si Δ	A1aap	VRM 102.0V;VBR 114.0-126.0V at It 1.0mA;IR 5.0uA;Vc 163.0V at IRSM 11.0A;BiDi
83	ZP2130	6	Si Δ	A1aap	VRM 105.0V;VBR 117.0-143.0V at It 1.0mA;IR 5.0uA;Vc 185.0V at IRSM 9.7A;BiDi
84	ZP2130A	6	Si Δ	A1aap	VRM 111.0V;VBR 124.0-137.0V at It 1.0mA;IR 5.0uA;Vc 178.0V at IRSM 10.1A;BiDi
85♦	ZP2150	6	Si Δ	A1aap	VRM 121.0V;VBR 135.0-135.0V at It1.0mA;IR 5.0uA;Vc 214.0V at IRSM 8.4 A;BiDi
86♦	ZP2150A	6	Si Δ	A1aap	VRM 214.0V; VBR 237.0-263.0V at It 1.0mA;IR 5.0uA;Vc 341.0V at IRSM 5.3 AiBiDi
87♦	ZP2160	6	Si Δ	A1aap	VRM 130.0V;VBR 144.0-156.0V at It1.0mA;IR 5.0uA;Vc 228.0V at IRSM 7.9 A;BiDi
88♦	ZP2160A	6	Si Δ	A1aap	VRM 136.0V;VBR 152.0-168.0V at It1.0mA;IR 5.0uA;Vc 218.0V at IRSM 8.2 A;BiDi
89♦	ZP2170	6	Si Δ	A1aap	VRM 138.0V;VBR 153.0-187.0V at It1.0mA;IR 5.0uA;Vc 243.0V at IRSM 7.4 A;BiDi
90♦	ZP2170A	6	Si Δ	A1aap	VRM 145.0V;VBR 162.0-179.0V at It1.0mA;IR 5.0uA;Vc 232.0V at IRSM 7.7 A;BiDi
91	ZP2180	6	Si Δ	A1aap	VRM 146.0V;VBR 162-198.0V at It 1.0mA;IR 5.0uA;Vc 257.0V at IRSM 7.00A;BiDi
92♦	ZP2180A	6	Si Δ	A1aap	VRM 154.0V;VBR 171.0-189.0V at It1.0mA;IR 5.0uA;Vc 245.0V at IRSM 7.3 A;BiDi
93♦	ZP2200	6	Si Δ	A1aap	VRM 162.0V;VBR 180.0-220.0V at It1.0mA;IR 5.0uA;Vc 286.0V at IRSM 6.3 A;BiDi
94♦	ZP2200A	6	Si Δ	A1aap	VRM 171.0V;VBR 190.0-210.0V at It1.0mA;IR 5.0uA;Vc 273.0V at IRSM 6.6 A;BiDi
95	ZP2220	6	Si Δ	A1aap	VRM 175.0V;VBR 198-242V at It 1.0mA;IR 5.0uA;Vc 314.0V at IRSM 5.7A;BiDi
96♦	ZP2220A	6	Si Δ	A1aap	VRM 185.0V;VBR 209.0-231.0V at It1.0mA;IR 5.0uA;Vc 300.0V at IRSM 6.0 A;BiDi
97♦	ZP2250	6	Si Δ	A1aap	VRM 202.0V;VBR 225.0-275.0V at It1.0mA;IR 5.0uA;Vc 357.0V at IRSM 5.0 A;BiDi
98♦	ZP2250A	6	Si Δ	A1aap	VRM 214.0V;VBR 238.0-263.0V at It1.0mA;IR 5.0uA;Vc 341.0V at IRSM 5.3 A;BiDi
99♦	ZP2275	6	Si Δ	A1aap	VRM 223.0V;VBR247.5-302.5V at It 1.0mA;IR 5.0uA;Vc 393.0V at IRSM 4.60A;BiDi
100	ZP2275A	6	Si Δ	A1aap	VRM 235.0V;VBR 261.3-288.8V at It 1.0mA;IR5.0uA;Vc 375.0V at IRSM 4.8A;BiDi
101	ZP3009	6	Si Δ	A1aaq	VRM 7.37V;VBR 8.19-10.0V at It 1.0mA;IR 100uA;Vc 13.5V at IRSM 259.0A;BiDi
102	ZP3009A	6	Si Δ	A1aaq	VRM 7.78V;VBR 8.65-9.55V at It 1.0mA;IR 100uA;Vc 12.9V at IRSM 271.0A;BiDi
103♦	ZP3010	6	Si Δ	A1aaq	VRM 8.10V;VBR 9.00-11.00V at It1.0mA;IR 20uA;Vc 14.9V at IRSM 235.0A;BiDi
104	ZP3010A	6	Si Δ	A1aaq	VRM 8.55V;VBR 9.50-10.5V at It 1.0mA;IR 20uA;Vc 14.2V at IRSM 246.0A;BiDi
105	ZP3011	6	Si Δ	A1aaq	VRM 8.92V;VBR 9.90-12.10V at It 1.0mA;IR 10.0uA;Vc 16.3V at IRSM 215.0A;BiDi
106	ZP3011A	6	Si Δ	A1aaq	VRM 9.40V;VBR 10.5-11.60V at It 1.0mA;IR 10.0uA;Vc 15.7V at IRSM 223.0A;BiDi
107♦	ZP3012	6	Si Δ	A1aaq	VRM 9.72V;VBR 10.8-132.2 Vat It 1.0 mA;IR 10.0uA;Vc 17.80 Vat IRSM 197A;BiDi
108	ZP3012A	6	Si Δ	A1aaq	VRM 10.2V;VBR 11.4-12.6V at It 1.0mA;IR 10.0uA;Vc 17.0V at IRSM 206.0A;BiDi
109	ZP3013	6	Si Δ	A1aaq	VRM 10.5V;VBR 11.7-14.3V at It 1.0mA;IR 10.0uA;Vc 19.3V at IRSM 181.0A;BiDi
110♦	ZP3013A	6	Si Δ	A1aaq	VRM 11.10V;VBR 12.4-13.7V at It1.0mA;IR 10.0uA;Vc 18.5V at IRSM 189.0A;BiDi

SYMBOLS AND CODES EXPLAINED IN INTERPRETER

7. TRANSIENT SUPPRESSOR DIODES – Bipolar & Unipolar Types (Cont'd)

IN ORDER OF (1) TYPE (2) MAT AND (3) TYPE NO.

LINE No.	3 TYPE NUMBER	1 TYPE	2 MAT.	DWG. NO.	DESCRIPTION
1	ZP3015	6	Si Δ	A1aaq	VRM 12.1V;VBR 13.5-16.5V at It 1.0mA;IR10.0uA;Vc 22.3V at IRSM 157.0A;BiDi
2	ZP3015A	6	Si Δ	A1aaq	VRM 12.8V;VBR 14.3-15.8V at It 1.0mA;IR10.0uA;Vc 21.3V at IRSM 164.0A;BiDi
3♦	ZP3016	6	Si Δ	A1aaq	VRM 12.9V;VBR 14.4-17.6V at It 1.0mA;Ir10.0uA;Vc23.8V at IRSM 147.0A;BiDi
4♦	ZP3016A	6	Si Δ	A1aaq	VRM 13.6V;VBR 15.2-16.8V at It.1.0mA;Ir10.0uA;Vc22.7V at IRSM 154.0A;BiDi
5♦	ZP3018	6	Si Δ	A1aaq	VRM 14.5V;VBR16.2-19.80V at It 1.0mA;IR 10.0uA;Vc 26.70V at IRSM 131.0A;BiDi
6♦	ZP3018A	6	Si Δ	A1aaq	VRM 15.3V;VBR 17.1-18.9V at It.1.0mA;Ir10.0uA;Vc25.5V at IRSM 137.0A;BiDi
7♦	ZP3020	6	Si Δ	A1aaq	VRM 16.2V;VBR 18.0-22.0V at It.1.0mA;Ir10.0uA;Vc29.7V at IRSM 118.0A;BiDi
8♦	ZP3020A	6	Si Δ	A1aaq	VRM 17.10;VBR 19.0-21.0V at It.1.0mA;Ir10.0uA;Vc28.4V at IRSM 123.0A;BiDi
9♦	ZP3022	6	Si Δ	A1aaq	VRM 17.8V;VBR 19.8-24.2VatIt 1.0mA;IR10.0uA;Vc32.7Vat IRSM 107.0A;Bidi
10♦	ZP3022A	6	Si Δ	A1aaq	VRM 18.8V;VBR 20.9-23.1VatIt 1.0mA;IR10.0uA;Vc31.2Vat IRSM 112.0A;Bidi
11♦	ZP3024	6	Si Δ	A1aaq	VRM 19.4V;VBR 21.6-26.4VatIt 1.0mA;IR10.0uA;Vc35.6Vat IRSM 98.0A;Bidi
12♦	ZP3024A	6	Si Δ	A1aaq	VRM 20.5V;VBR 22.8-25.2VatIt 1.0mA;IR10.0uA;Vc34.0Vat IRSM 103.0AiBiDi
13♦	ZP3027	6	Si Δ	A1aaq	VRM 21.8V;VBR24.3-29.70V at It 1.0mA;IR 10.0uA;Vc 40.10V at IRSM 87.3A;BiDi
14♦	ZP3027A	6	Si Δ	A1aaq	VRM 23.1V;VBR 25.7-28.4VatIt 1.0mA;IR10.0uA;Vc38.3Vat IRSM 91.4AiBiDi
15♦	ZP3030	6	Si Δ	A1aaq	VRM 24.33V;VBR27.0-33.0VatIt1.0mA;Ir10.0uA;Vc44.5Vat IRSM 78.7AiBiDi
16♦	ZP3030A	6	Si Δ	A1aaq	VRM 25.6V;VBR28.5-31.5VatIt1.0mA;IR10.0uA;Vc42.5Vat IRSM 82.4AiBiDi
17♦	ZP3033	6	Si Δ	Alaaq	VRM 26.8V;VBR 29.7-36.3V at It 1.0mA;IR 10.0uA;Vc 49.0V at IRSM 71.40A;BiDi
18♦	ZP3033A	6	Si Δ	Alaaq	VRM 28.2V;VBR 31.4-34.7V at It 1.0mA;IR 10.0uA;Vc 46.8V at IRSM 74.8A;BiDi
19♦	ZP3036	6	Si Δ	A1aaq	VRM 29.10V;VBR32.4-39.60V at It 1.0mA;IR 10.0uA;Vc 53.40V at IRSM 65.5A;BiDi
20♦	ZP3036A	6	Si Δ	Alaaq	VRM 30.8V;VBR 34.2-37.8V at It 1.0mA;IR 10.0uA;Vc 51.0V at IRSM 68.6A;BiDi
21♦	ZP3039	6	Si Δ	Alaaq	VRM 31.6V;VBR 35.1-42.9V at It 1.0mA;IR 10.0uA;Vc 58.0V at IRSM 60.3A;BiDi
22♦	ZP3039A	6	Si Δ	Alaaq	VRM 33.3V;VBR 37.1-41.0V at It 1.0mA;IR 10.0uA;Vc 55.3V at IRSM 63.3A;BiDi
23♦	ZP3043	6	Si Δ	Alaaq	VRM 34.8V;VBR 38.7-47.3V at It 1.0mA;IR 10.0uA;Vc 63.9V at IRSM 54.8A;BiDi
24♦	ZP3043A	6	Si Δ	Alaaq	VRM 36.8V;VBR 40.9-45.2V at It 1.0mA;IR 10.0uA;Vc 61.0V at IRSM 57.4A;BiDi
25♦	ZP3047	6	Si Δ	Alaaq	VRM 38.1V;VBR 42.3-51.7V at It 1.0mA;IR 10.0uA;Vc 69.8V at IRSM 50.1A;BiDi
26♦	ZP3047A	6	Si Δ	Alaaq	VRM 40.2V;VBR 44.7-49.4V at It 1.0mA;IR 10.0uA;Vc 66.7V at IRSM 52.5A;BiDi
27♦	ZP3051	6	Si Δ	Alaaq	VRM 41.3V;VBR 45.9-56.1V at It 1.0mA;IR 10.0uA;Vc 75.3V at IRSM 46.5A;BiDi
28♦	ZP3051A	6	Si Δ	Alaaq	VRM 43.6V;VBR 48.5-53.6V at It 1.0mA;IR 10.0uA;Vc 72.3V at IRSM 48.4A;BiDi
29♦	ZP3056	6	Si Δ	A1aaq	VRM 45.50V;VBR50.4-61.60V at It 1.0mA;IR 10.0uA;Vc 83.10V at IRSM 42.1A;BiDi
30♦	ZP3056A	6	Si Δ	Alaaq	VRM 47.8V;VBR 53.2-58.8V at It 1.0mA;IR 10.0uA;Vc 79.4V at IRSM 44.1A;BiDi
31♦	ZP3062	6	Si Δ	A1aaq	VRM 50.2V;VBR55.8-68.20V at It 1.0mA;IR 10.0uA;Vc 92.0V at IRSM 38.0A;BiDi
32♦	ZP3062A	6	Si Δ	A1aaq	VRM 53.0V;VBR 58.9-65.1V at It 1.0mA;IR 10.0uA;Vc 87.0V at IRSM 40.2A;BiDi
33♦	ZP3068	6	Si Δ	A1aaq	VRM 55.10V;VBR61.2-74.80V at It 1.0mA;IR 10.0uA;Vc 101.0V at IRSM 34.7A;BiDi
34♦	ZP3068A	6	Si Δ	A1aaq	VRM 58.1V;VBR 64.6-71.4V at It 1.0mA;IR 10.0uA;Vc 96.0V at IRSM 36.4A;BiDi
35♦	ZP3091	6	Si Δ	A1aaq	VRM 73.7V;VBR 81.9-100.0V at It 1.0mA;IR 10.0uA;Vc 135.0V at IRSM 25.9A;Bidi
36♦	ZP3091A	6	Si Δ	A1aaq	VRM 77.8V;VBR 86.5-95.5V at It 1.0mA;IR 10.0uA;Vc 128.0V at IRSM 27.4A;Bidi
37♦	ZP3100	6	Si Δ	A1aaq	VRM 81.0V;VBR 90.0-110.0V at It 1.0mA;IR 10.0uA;Vc 148.0V at IRSM 23.7A;BiDi
38♦	ZP3100A	6	Si Δ	A1aaq	VRM 85.5V;VBR 95.0-105.0V at It 1.0mA;IR 10.0uA;Vc 141.0V at IRSM 24.8A;BiDi
39♦	ZP3110	6	Si Δ	A1aaq	VRM 89.0V;VBR 99.0-121.0V at It 1.0mA;IR 10.0uA;Vc 163.0V at IRSM 21.4A;BiDi
40♦	ZP3110A	6	Si Δ	A1aaq	VRM 94.0V;VBR 105.0-116.0V at It 1.0mA;Ir 10.0uA;Vc 156.0V at IRSM 22.4A;BiDi
41♦	ZP3120	6	Si Δ	A1aaq	VRM 97.0V;VBR108-132.0V at It 1.0mA;IR 10.0uA;Vc 178.0V at IRSM 19.6A;BiDi
42♦	ZP3120A	6	Si Δ	A1aaq	VRM 102.0V;VBR 114.0-126.0V at It1.0mA;Ir 10.0uA;Vc 170.0V at IRSM 20.6A;BiDi
43♦	ZP3130	6	Si Δ	A1aaq	VRM 105.0V;VBR 117.0-143.0V at It1.0mA;Ir 10.0uA;Vc 193.0V at IRSM 18.1A;BiDi
44♦	ZP3130A	6	Si Δ	A1aaq	VRM 111.0V;VBR 124.0-137.0V at It1.0mA;Ir 10.0uA;Vc 184.0V at IRSM 19.0A;BiDi
45	ZP3140	6	Si Δ	A1aaq	VBR 154; Ir Max 5.0u at VR 113V; Cap 1200pF at 1Mhz, 2.0v;Tmax 175°C
46♦	ZP3150	6	Si Δ	A1aaq	VRM 121.0V;VBR 135.0-165.0V at It1.0mA;Ir 10.0uA;Vc 222.0V at IRSM 15.7A;BiDi
47♦	ZP3150A	6	Si Δ	A1aaq	VRM 128.0V;VBR 143.0-158.0V at It1.0mA;Ir 10.0uA;Vc 213.0V at IRSM 16.4A;BiDi
48♦	ZP3160	6	Si Δ	A1aaq	VRM 130.0V;VBR 144.0-176.0V at It1.0mA;Ir 10.0uA;Vc 237.0V at IRSM 14.7A;BiDi
49♦	ZP3160A	6	Si Δ	A1aaq	VRM 136.0V;VBR 152.0-168.0V at It1.0mA;Ir 10.0uA;Vc 226.0V at IRSM 15.4A;BiDi
50♦	ZP3170	6	Si Δ	A1aaq	VRM 138.0V;VBR 153.0-187.0V at It1.0mA;Ir 10.0uA;Vc 252.0V at IRSM 13.9A;BiDi
51♦	ZP3170A	6	Si Δ	A1aaq	VRM 145.0V;VBR 162.0-179.0V at It1.0mA;Ir 10.0uA;Vc 241.0V at IRSM 14.5A;BiDi
52♦	ZP3180	6	Si Δ	A1aaq	VRM 146.0V;VBR162-198.0V at It 1.0mA;IR 10.0uA;Vc 267.0V at IRSM 13.10A;BiDi
53♦	ZP3180A	6	Si Δ	A1aaq	VRM 154.0V;VBR 171.0-189.0V at It1.0mA;Ir 10.0uA;Vc 255.0V at IRSM 13.7A;BiDi
54♦	ZP3200	6	Si Δ	A1aaq	VRM 162.0V;VBR 180.0-220.0V at It1.0mA;Ir 10.0uA;Vc 297.0V at IRSM 11.8A;BiDi
55♦	ZP3200A	6	Si Δ	A1aaq	VRM 171.0V;VBR 190.0-210.0V at It1.0mA;Ir 10.0uA;Vc 283.0V at IRSM 12.3A;BiDi
56♦	ZP3220	6	Si Δ	A1aaq	VRM 175.0V;VBR198-242.0V at It 1.0mA;IR 10.0uA;Vc 326.0V at IRSM 10.7A;BiDi
57♦	ZP3220A	6	Si	A1aaq	VRM 185.0V;VBR 209.0-231.0V at It1.0mA;IR 10.0uA;Vc 311.0V at IRSM 11.2A;BiDi
58♦	ZP3250	6	Si	A1aaq	VRM 202.0V;VBR 225.0-275.0V at It1.0mA;IR 10.0uA;Vc 371.0V at IRSM 9.40A;BiDi
59♦	ZP3250A	6	Si	A1aaq	VRM 214.0V;VBR 237.0-263.0V at It1.0mA;IR 10.0uA;Vc 355.0V at IRSM 9.90A;BiDi
60♦	ZP3275	6	Si Δ	A1aaq	VRM 223.0V;VBR247.5-302.5V at It 1.0mA;IR 10.0uA;Vc 408V at IRSM 8.60A;BiDi
61♦	ZP3275A	6	Si	A1aaq	VRM 235.0V;VBR 261.3-288.8V at It1.0mA;IR 10.0uA;Vc 389.0V at IRSM 9.00A;BiDi
62▼	ZZ12	6	Si	DO27	IRM5.0 uAat 9.0 VRM;14V(BR)max at IR 5.0 mA; 18 V(CL) at Ipp 40A
63	ZZ22	6	Si	DO13	Bidirectional Zener;VZ 26V;IR 5.0uA at 13V;Tj 150° C;Ip 200A
64	ZZ75	6	Si	DO13	Bidirectional Zener;VZ 87V;IR 5.0uA at 45V;Tj 150° C;Ip 6.8A
65♦	ZZ91	6	Si	DO13	Bidirectional Zener; VZ 106V; IR 50uA at 55V; Tj 150° C; Ip 5.6A
66	ZZ110	6	Si	DO13	Bidirectional Zener;VZ 128V;IR 5.0uA at 66V;Tj 150° C;Ip 4.5A
67	ZZY22	6	Si	DO13	Bidirectional Zener;VZ 26V;IR 5.0uA at 13V;Tj 150° C;Ip 130A
68	ZZY75	6	Si	DO13	Bidirectional Zener;VZ 87V;IR 5.0uA at 45V;Tj 150° C;Ip 50A
69	ZZY91	6	Si	DO13	Bidirectional Zener;VZ 106V;IR 5.0uA at 55V;Tj 150° C;Ip 40A
70	ZZY110	6	Si	DO13	Bidirectional Zener;VZ 128V;IR 5.0uA at 66V;Tj 150° C;Ip 30A
71	BZW86-7V5	6	SiΔ	DO30Ø	Clamp Volt 12V;V(BR)R 8.5V min;VF 1.5V max at IF 500A;PRSM 60kW max.
72	BZW86-8V2	6	SiΔ	DO30Ø	Clamp Volt 13V;V(BR)R 9.4V min;VF 1.5V max at IF 500A;PRSM 60kW max.
73	BZW86-9V1	6	SiΔ	DO30Ø	Clamp Volt 14V;V(BR)R 10.4V min;VF 1.5V max at IF 500A;PRSM 60kW max.
74	BZW86-10	6	SiΔ	DO30Ø	Clamp Volt 15.5V;V(BR)R 11.4V min;VF 1.5V max at IF 500A;PRSM 60kW max.
75	BZW86-11	6	SiΔ	DO30Ø	Clamp Volt 17V;V(BR)R 12.4V min;VF 1.5V max at IF 500A;PRSM 60kW max.
76	BZW86-12	6	SiΔ	DO30Ø	Clamp Volt 18.5V;V(BR)R 13.8V min;VF 1.5V max at IF 500A;PRSM 60kW max.
77	BZW86-13	6	SiΔ	DO30Ø	Clamp Volt 20V;V(BR)R 15.3V min;VF 1.5V max at IF 500A;PRSM 60kW max.
78	BZW86-15	6	SiΔ	DO30Ø	Clamp Volt 23V;V(BR)R 16.8V min;VF 1.5V max at IF 500A;PRSM 60kW max.
79	BZW86-16	6	SiΔ	DO30Ø	Clamp Volt 27V;V(BR)R 18.8V min;VF 1.5V max at IF 500A;PRSM 60kW max.
80	BZW86-18	6	SiΔ	DO30Ø	Clamp Volt 31V;V(BR)R 20.8V min;VF 1.5V max at IF 500A;PRSM 60kW max.
81	BZW86-20	6	SiΔ	DO30Ø	Clamp Volt 34V;V(BR)R 22.8V min;VF 1.5V max at IF 500A;PRSM 60kW max.
82	BZW86-22	6	SiΔ	DO30Ø	Clamp Volt 37V;V(BR)R 25.1V min;VF 1.5V max at IF 500A;PRSM 60kW max.
83	BZW86-24	6	SiΔ	DO30Ø	Clamp Volt 40V;V(BR)R 28V min;VF 1.5V max at IF 500A;PRSM 60kW max.
84	BZW86-27	6	SiΔ	DO30Ø	Clamp Volt 44V;V(BR)R 31V min;VF 1.5V max at IF 500A;PRSM 60kW max.
85	BZW86-30	6	SiΔ	DO30Ø	Clamp Volt 47V;V(BR)R 34V min;VF 1.5V max at IF 500A;PRSM 60kW max.
86	BZW86-33	6	SiΔ	DO30Ø	Clamp Volt 51V;V(BR)R 37V min;VF 1.5V max at IF 500A;PRSM 60kW max.
87	BZW86-36	6	SiΔ	DO30Ø	Clamp Volt 55V;V(BR)R 40V min;VF 1.5V max at IF 500A;PRSM 60kW max.
88	BZW86-39	6	SiΔ	DO30Ø	Clamp Volt 60V;V(BR)R 44V min;VF 1.5V max at IF 500A;PRSM 60kW max.
89	BZW86-43	6	SiΔ	DO30Ø	Clamp Volt 66V;V(BR)R 48V min;VF 1.5V max at IF 500A;PRSM 60kW max.
90	BZW86-47	6	SiΔ	DO30Ø	Clamp Volt 72V;V(BR)R 52V min;VF 1.5V max at IF 500A;PRSM 60kW max.
91	BZW86-51	6	SiΔ	DO30Ø	Clamp Volt 78V;V(BR)R 58V min;VF 1.5V max at IF 500A;PRSM 60kW max.
92	BZW86-56	6	SiΔ	DO30Ø	Clamp Volt 85V;V(BR)R 64V min;VF 1.5V max at IF 500A;PRSM 60kW max.
93	BZW86-62	6	SiΔ	DO30Ø	Clamp Volt 92V;V(BR)R 70V min;VF 1.5V max at IF 500A;PRSM 60kW max.
94	BZW91-5V6	6	SiΔ	DO5Ø	Clamp Volt 8.5V;V(BR)R 6.4V min;VF 1.5V max at IF 10A;PRSM 27kW max.
95	BZW91-6V2	6	SiΔ	DO5Ø	Clamp Volt 9.5V;V(BR)R 7.0V min;VF 1.5V max at IF 10A;PRSM 27kW max.
96	BZW91-6V8	6	SiΔ	DO5Ø	Clamp Volt 10V;V(BR)R 7.7V min;VF 1.5V max at IF 10A;PRSM 27kW max.
97	BZW91-7V5	6	SiΔ	DO5Ø	Clamp Volt 11V;V(BR)R 8.5V min;VF 1.5V max at IF 10A;PRSM 27kW max.
98	BZW91-8V2	6	SiΔ	DO5Ø	Clamp Volt 12V;V(BR)R 9.4V min;VF 1.5V max at IF 10A;PRSM 27kW max.
99	BZW91-9V1	6	SiΔ	DO5Ø	Clamp Volt 13V;V(BR)R 10.4V min;VF 1.5V max at IF 10A;PRSM 27kW max.
100	BZW91-10	6	SiΔ	DO5Ø	Clamp Volt 14.5V;V(BR)R 11.4V min;VF 1.5V max at IF10A;PRSM 27kW max.
101	BZW91-11	6	SiΔ	DO5Ø	Clamp Volt 16V;V(BR)R 12.4V min;VF 1.5V max at IF 10A;PRSM 27kW max.
102	BZW91-12	6	SiΔ	DO5Ø	Clamp Volt 17.5V;V(BR)R 13.8V min;VF 1.5V max at IF 10A;PRSM27kW max.
103	BZW91-13	6	SiΔ	DO5Ø	Clamp Volt 19V;V(BR)R 15.3V min;VF 1.5V max at IF 10A;PRSM 27kW max.
104	BZW91-15	6	SiΔ	DO5Ø	Clamp Volt 22V;V(BR)R 16.8V min;VF 1.5V max at IF 10A;PRSM 27kW max.
105	BZW91-16	6	SiΔ	DO5Ø	Clamp Volt 24V;V(BR)R 18.8V min;VF 1.5V max at IF 10A;PRSM 27kW max.
106	BZW91-18	6	SiΔ	DO5Ø	Clamp Volt 26V;V(BR)R 20.8Vmin;VF 1.5V max at IF 10A;PRSM 27kW max
107	BZW91-20	6	SiΔ	DO5Ø	Clamp Volt 28V;V(BR)R 22.8V min;VF 1.5V max at IF 10A;PRSM 27kW max.
108	BZW91-22	6	SiΔ	DO5Ø	Clamp Volt 31V;V(BR)R 25.1V min;VF 1.5V max at IF 10A;PRSM 27kW max
109	BZW91-24	6	SiΔ	DO5Ø	Clamp Volt 34V;V(BR)R 28V min;VF 1.5V max at IF 10A;PRSM 27kW max
110	BZW91-27	6	SiΔ	DO5Ø	Clamp Volt 38V;V(BR)R 31V min;VF 1.5V max at IF 10A;PRSM 27kW max.

7. TRANSIENT SUPPRESSOR DIODES - Bipolar & Unipolar Types (Cont'd)

IN ORDER OF (1) TYPE (2) MAT AND (3) TYPE NO.

LINE No.	3 TYPE NUMBER	1 TYPE	2 MAT.	DWG. NO.	DESCRIPTION
1	BZW91-30	6	SiΔ	DO5Ø	Clamp Volt 40V;V(BR)R 34V min;VF 1.5V max at IF 10A;PRSM 27kW max.
2	BZW91-33	6	SiΔ	DO5Ø	Clamp Volt 44V;V(BR)R 37V min;VF 1.5V max at IF 10A;PRSM 27kW max.
3	BZW91-36	6	SiΔ	DO5Ø	Clamp Volt 49V;V(BR)R 40V min;VF 1.5V max at IF 10A;PRSM 27kW max.
4	BZW91-39	6	SiΔ	DO5Ø	Clamp Volt 54V;V(BR)R 44V min;VF 1.5V max at IF 10A;PRSM 27kW max.
5	BZW91-43	6	SiΔ	DO5Ø	Clamp Volt 60V;V(BR)R 48V min;VF 1.5V max at IF 10A;PRSM 27kW max.
6	BZW91-47	6	SiΔ	DO5Ø	Clamp Volt 66V;V(BR)R 52V min;VF 1.5V max at IF 10A;PRSM 27kW max.
7	BZW91-51	6	SiΔ	DO5Ø	Clamp Volt 72V;V(BR)R 58V min;VF 1.5V max at IF 10A;PRSM 27kW max.
8	BZW91-56	6	SiΔ	DO4Ø	Clamp Volt 79V;V(BR)R 64Vmin;VF 1.5Vmax at IF 10A;PRSM 27kW max
9	BZW91-62	6	SiΔ	DO5Ø	Clamp Volt 86V;V(BR)R 70V min;VF 1.5V max at IF 10A;PRSM 27kW max.
10	BZW93-5V6	6	SiΔ	DO4Ø	Clamp Volt 9.0V;V(BR)R 6.4Vmin;VF 1.5Vmax at IF 10A;PRSM 3.0kWmax
11	BZW93-6V2	6	SiΔ	DO4Ø	Clamp Volt 10V;V(BR)R 7.0V min;VF 1.5V max at IF 10A;PRSM 3.0kW max.
12	BZW93-6V8	6	SiΔ	DO4Ø	Clamp Volt 11V;V(BR)R 7.7V min;VF 1.5V max at IF 10A;PRSM 3.0kW max.
13	BZW93-7V5	6	SiΔ	DO4Ø	Clamp Volt 12V;V(BR)R 8.5V min;VF 1.5V max at IF 10A;PRSM 3.0kW max.
14	BZW93-8V2	6	SiΔ	DO4Ø	Clamp Volt 13.5V;V(BR)R 9.4V min;VF 1.5V max at IF 10A;PRSM 3.0kW max.
15	BZW93-9V1	6	SiΔ	DO4Ø	Clamp Volt 15V;V(BR)R 10.4V min;VF 1.5V max at IF 10A;PRSM 3.0kW max.
16	BZW93-10	6	SiΔ	DO4Ø	Clamp Volt 17V;V(BR)R 11.4V min;VF 1.5V max at IF 10A;PRSM 3.0kW max.
17	BZW93-11	6	SiΔ	DO4Ø	Clamp Volt 19V;V(BR)R 12.4V min;VF 1.5V max at IF 10A;PRSM 3.0kW max.
18	BZW93-12	6	SiΔ	DO4Ø	Clamp Volt 21V;V(BR)R 13.8V min;VF 1.5V max at IF 10A;PRSM 3.0kW max.
19	BZW93-13	6	SiΔ	DO4Ø	Clamp Volt 23V;V(BR)R 15.3V min;VF 1.5V max at IF 10A;PRSM 3.0kW max.
20	BZW93-15	6	SiΔ	DO4Ø	Clamp Volt 22V;V(BR)R 16.8V min;VF 1.5V max at IF 10A;PRSM 3.0kW max.
21	BZW93-16	6	SiΔ	DO4Ø	Clamp Volt 25V;V(BR)R 18.8V min;VF 1.5V max at IF 10A;PRSM 3.0kW max.
22	BZW93-18	6	SiΔ	DO4Ø	Clamp Volt 28V;V(BR)R 20.8V min;VF 1.5V max at IF 10A;PRSM 3.0kW max.
23	BZW93-20	6	SiΔ	DO4Ø	Clamp Volt 32V;V(BR)R 22.8V min;VF 1.5V max at IF 10A;PRSM 3.0kW max.
24	BZW93-22	6	SiΔ	DO4Ø	Clamp Volt 36V;V(BR)R 25.1V min;VF 1.5V max at IF 10A;PRSM 3.0kW max.
25	BZW93-24	6	SiΔ	DO4Ø	Clamp Volt 41V;V(BR)R 28V min;VF 1.5V max at IF 10A;PRSM 3.0kW max.
26	BZW93-27	6	SiΔ	DO4Ø	Clamp Volt 47V;V(BR)R 31V min;VF 1.5V max at IF 10A;PRSM 3.0kW max.
27	BZW93-30	6	SiΔ	DO4Ø	Clamp Volt 44V;V(BR)R 34V min;VF 1.5V max at IF 10A;PRSM 3.0kW max.
28	BZW93-33	6	SiΔ	DO4Ø	Clamp Volt 49V;V(BR)R 37V min;VF 1.5V max at IF 10A;PRSM 3.0kW max.
29	BZW93-36	6	SiΔ	DO4Ø	Clamp Volt 56V;V(BR)R 40V min;VF 1.5V max at IF 10A;PRSM 3.0kW max.
30	BZW93-39	6	SiΔ	DO4Ø	Clamp Volt 63V;V(BR)R 44V min;VF 1.5V max at IF 10A;PRSM 3.0kW max.
31	BZW93-43	6	SiΔ	DO4Ø	Clamp Volt 71V;V(BR)R 48V min;VF 1.5V max at IF 10A;PRSM 3.0kW max.
32	BZW93-47	6	SiΔ	DO4Ø	Clamp Volt 80V;V(BR)R 52V min;VF 1.5V max at IF10A;PRSM 3.0kW max.
33	BZW93-51	6	SiΔ	DO4Ø	Clamp Volt 89V;V(BR)R 58V min;VF 1.5V max at IF 10A;PRSM 3.0kW max.
34	BZW93-56	6	SiΔ	DO4Ø	Clamp Volt 98V;V(BR)R 64V min;VF 1.5V max at IF 10A;PRSM 3.0kW max
35	BZW93-62	6	SiΔ	DO4Ø	Clamp Volt 104V;V(BR)R 70V min VF 1.5V max at IF 10A;PRSM 3.0kW max
36	DSAS09-0	6	SiΔ	F103	Surge Volt Suppressor;VBR 800V;IRM 50A;PRAV 30W;PRSM 800kW.
37	DSAS09-2	6	SiΔ	F103	Surge Volt Suppressor;VBR 850V;IRM 50A;PRAV 30W;PRSM 800kW.
38	DSAS09-4	6	SiΔ	F103	Surge Volt Suppressor;VBR 900V;IRM 50A;PRAV 30W;PRSM 800kW.
39	DSAS09-6	6	SiΔ	F103	Surge Volt Suppressor;VBR 950V;IRM 50A;PRAV 30W;PRSM 800kW.
40	DSAS11-0	6	SiΔ	F103	Surge Volt Suppressor;VBR 1.0kV;IRM 41A;PRAV 30W;PRSM 800kW.
41	DSAS11-2	6	SiΔ	F103	Surge Volt Suppressor;VBR 1.05kV;IRM 41A;PRAV 30W;PRSM 800kW.
42	DSAS11-4	6	SiΔ	F103	Surge Volt Suppressor;VBR 1.1kV;IRM 41A;PRAV 30W;PRSM 800kW.
43	DSAS11-6	6	SiΔ	F103	Surge Volt Suppressor;VBR 1.15kV;IRM 41A;PRAV 30W;PRSM 800kW.
44	DSAS13-0	6	SiΔ	F103	Surge Volt Suppressor;VBR 1.2kV;IRM 35A;PRAV 30W;PRSM 800kW.
45	DSAS13-2	6	SiΔ	F103	Surge Volt Suppressor;VBR 1.25kV;IRM 35A;PRAV 30W;PRSM 800kW.
46	DSAS13-4	6	SiΔ	F103	Surge Volt Suppressor;VBR 1.3kV;IRM 35A;PRAV 30W;PRSM 800kW.
47	DSAS13-6	6	SiΔ	F103	Surge Volt Suppressor;VBR 1.35kV;IRM 35A;PRAV 30W;PRSM 800kW.
48	DSAS15-0	6	SiΔ	F103	Surge Volt Suppressor;BVR 1.38kV;IRM 30A;PRAV 30W;PRSM 800kW.
49	DSAS15-2	6	SiΔ	F103	Surge Volt Suppressor;BVR 1.43kV;IRM 30A;PRAV 30W;PRSM 800kW.
50	DSAS15-4	6	SiΔ	F103	Surge Volt Suppressor;BVR 1.48kV;IRM 30A;PRAV 30W;PRSM 800kW.
51	DSAS15-6	6	SiΔ	F103	Surge Volt Suppressor;BVR 1.53kV;IRM 30A;PRAV 30W;PRSM 800kW.
52	DSAS17-0	6	SiΔ	F103	Surge Volt Suppressor;VBR 1.6kV;IRM 50A;PRAV 60W;PRSM 1.6kW.
53	DSAS17-4	6	SiΔ	F103	Surge Volt Suppressor;VBR 1.7kV;IRM 50A;PRAV 60W;PRSM 1.6kW.
54	DSAS19-0	6	SiΔ	F103	Surge Volt Suppressor;VBR 1.8kV;IRM 50A;PRAV 60W;PRSM 1.6kW.
55	DSAS19-4	6	SiΔ	F103	Surge Volt Suppressor;VBR 1.9kV;IRM 50A;PRAV 60W;PRSM 1.6kW.
56	DSAS21-0	6	SiΔ	F103	Surge Volt Suppressor;VBR 2.0kV;IRM 41A;PRAV 60W;PRSM 1.6kW.
57	DSAS21-4	6	SiΔ	F103	Surge Volt Suppressor;VBR 2.1kV;IRM 41A;PRAV 60W;PRSM 1.6kW.
58	DSAS23-0	6	SiΔ	F103	Surge Volt Suppressor;VBR 2.2kV;IRM 41A;PRAV 60W;PRSM 1.6kW.
59	DSAS23-4	6	SiΔ	F103	Surge Volt Suppressor;VBR 2.3kV;IRM 41A;PRAV 60W;PRSM 1.6kW.
60	DSAS25-0	6	SiΔ	F103	Surge Volt Suppressor;VBR 2.4kV;IRM 35A;PRAV 60W;PRSM 1.6kW.
61	DSAS25-4	6	SiΔ	F103	Surge Volt Suppressor;VBR 2.5kV;IRM 35A;PRAV 60W;PRSM 1.6kW.
62	DSAS27-0	6	SiΔ	F103	Surge Volt Suppressor;VBR 2.6kV;IRM 35A;PRAV 60W;PRSM 1.6kW.
63	DSAS27-4	6	SiΔ	F103	Surge Volt Suppressor;VBR 2.7kV;IRM 35A;PRAV 60W;PRSM 1.6kW.
64	DSAS29-0	6	SiΔ	F103	Surge Volt Suppressor;BVR 2.8kV;IRM 30A;PRAV 60W;PRSM 1.6kW.
65	DSAS29-4	6	SiΔ	F103	Surge Volt Suppressor;BVR 2.9kV;IRM 30A;PRAV 60W;PRSM 1.6kW.
66	DSAS31-0	6	SiΔ	F103	Surge Volt Suppressor;BVR 3.0kV;IRM 30A;PRAV 60W;PRSM 1.6kW.
67	DSAS31-4	6	SiΔ	F103	Surge Volt Suppressor;BVR 3.1kV;IRM 30A;PRAV 60W;PRSM 1.6kW.
68	DL201	6	Si$	V1	VB 30V min at 10uA;Cj 100ff max at 0V,1MHz;RS 900mΩmax;Low Duty Pw100W;TL5.0nsmax
69	DL202	6	Si$	V1	VB 30V min at 10uA;Cj 200ff max at 0V,1MHz;RS 800mΩmax;Low Duty Pw100W;TL5.0nsmax
70	DL203	6	Si$	V1	VB 30V min at 10uA;Cj 300ff max at 0V,1MHz;RS 700mΩmax;Low Duty Pw 100W;TL5.0ns max
71	DL204	6	Si$	V1	VB 30V min at 10uA;Cj 400ff max at 0V,1MHz;RS 600mΩmax;Low Duty Pw 100W;TL5.0ns max
72	DL401	6	Si$	V1	VB 40V min at 10uA;Cj 100ff max at 0V,1MHz;RS 900mΩmax;Low Duty Pw 100W;TL5.0ns max
73	DL402	6	Si$	V1	VB 40V min at 10uA;Cj 200ff max at 0V,1MHz;RS 800mΩmax;Low Duty Pw 100W;TL5.0ns max
74	DL403	6	Si$	V1	VB 40V min at 10uA;Cj 300ff max at 0V,1MHz;RS 700mΩmax;Low Duty Pw 100W;TL5.0ns max
75	DL404	6	Si$	V1	VB 40V min at 10uA;Cj 400ff max at 0V,1MHz;RS 600mΩmax;Low Duty Pw 100W;TL5.0ns max
76	DL601	6	Si$	V1	VB 60V min at 10uA;Cj 100ff max at 0V,1MHz;RS 800mΩmax;Low Duty Pw 100W;TL10ns max
77	DL602	6	Si$	V1	VB 60V min at 10uA;Cj 200ff max at 0V,1MHz;RS 700mΩmax;Low Duty Pw 100W;TL10ns max
78	DL603	6	Si$	V1	VB 60V min at 10uA;Cj 300ff max at 0V,1MHz;RS 600mΩmax;Low Duty Pw 100W;TL10ns max
79	DL604	6	Si$	V1	VB 60V min at 10uA;Cj 400ff max at 0V,1MHz;RS 500mΩmax;Low Duty Pw 100W;TL10ns max
80	DL801	6	Si$	V1	VB 80V min at 10uA;Cj 100ff max at 0V,1MHz;RS 800mΩmax;Low Duty Pw 100W;TL15ns max
81	DL802	6	Si$	V1	VB 80V min at 10uA;Cj 200ff max at 0V,1MHz;RS 700mΩmax;Low Duty Pw 100W;TL15ns max
82	DL803	6	Si$	V1	VB 80V min at 10uA;Cj 300ff max at 0V,1MHz;RS 600mΩmax;Low Duty Pw 100W;TL15ns max
83	DL804	6	Si$	V1	VB 80V min at 10uA;Cj 400ff max at 0V,1MHz;RS 500mΩmax;Low Duty Pw 100W;TL15ns max
84	SNR-A480L80	6	Zno	M942q	Varistor Volt 679-914V at 1.0mA pk: Pd av 1.0W;Ip 4.0kA;VTC -0.05%/°C
85	SNR-A95L8	6	ZnO	M942	Varistor Volt 134-191V at 1.0mApk;Pd av 500mW;Ip 2.0kA;VTC -.05%/°C
86	SNR-A130L2	6	ZnO	M941	Varistor Volt 184-225V at 1.0mApk;Pd av 240mW;Ip 400A;VTC -.05%/°C
87	SNR-A130L10	6	ZnO	M942a	Varistor Volt 184-254V at 1.0mApk;Pd av 500mW;Ip 2.0kA;VTC -.05%/°C
88	SNR-A130L20	6	ZnO	M942m	Varistor Volt 184-254V at 1.0mApk;Pd av 850mW;Ip 4.0kA;VTC -.05%/°C
89	SNR-A150L2	6	ZnO	M941a	Varistor Volt 212-260V at 1.0mApk;Pd av 240mW;Ip 400A;VTC -.05%/°C
90	SNR-A150L10	6	ZnO	M942a	Varistor Volt 212-260V at 1.0mApk;Pd av 500mW;Ip 2.0kA;VTC -.05%/°C
91	SNR-A150L20	6	ZnO	M942m	Varistor Volt 212-282V at 1.0mApk;Pd av 850mW;Ip 4.0kA;VTC -.05%/°C
92	SNR-A250L4	6	ZnO	M941b	Varistor Volt 354-433V at 1.0mApk;Pd av 280mW;Ip 400A;VTC -.05%/°C
93	SNR-A250L20	6	ZnO	M942b	Varistor Volt 354-433V at 1.0mApk;Pd av 600mW;Ip 2.0kA;VTC -.05%/°C
94	SNR-A250L40	6	ZnO	M942n	Varistor Volt 354-472V at 1.0mApk;Pd av 900mW;Ip 4.0kA;VTC -.05%/°C
95	SNR-A275L4	6	ZnO	M941c	Varistor Volt 389-475V at 1.0mApk;Pd av 280mW;Ip 400A;VTC -.05%/°C
96	SNR-A275L20	6	ZnO	M942c	Varistor Volt 389-475V at 1.0mA Pk;Pd Avg 600mW;Ip 2.0kA;VTC -.05%/°C
97	SNR-A275L40	6	ZnO	M942n	Varistor Volt 389-522V at 1.0mApk;Pd av 900mW;Ip 4.0kA;VTC -.05%/°C
98	SNR-A300L4	6	ZnO	M941d	Varistor Volt 424-518V at 1.0mApk;Pd av 280mW;Ip 400A;VTC -.05%/°C
99	SNR-A320L20	6	ZnO	M942d	Varistor Volt 462-565V at 1.0mApk;Pd av 600mW;Ip 2.0kA;VTC -.05%/°C
100	SNR-A320L40	6	ZnO	M942p	Varistor Volt 452-635V at 1.0mApk;Pd av 900mW;Ip 4.0kA;VTC -.05%/°C
101	SNR-A420L20	6	ZnO	M942e	Varistor Volt 610-746V at 1.0mApk;Pd av 600mW;Ip 2.0kA;VTC -.05%/°C
102	SNR-A420L40	6	ZnO	M942q	Varistor Volt 595-800V at 1.0mApk;Pd av 900mW;Ip 4.0kA;VTC -.05%/°C
103	SNR-A460L20	6	ZnO	M942e	Varistor Volt 665-813V at 1.0mApk;Pd av 600mW;Ip 2.0kA;VTC -.05%/°C
104	SNR-A460L40	6	ZnO	M942q	Varistor Volt 650-878V at 1.0mApk;Pd av 900mW;Ip 4.0kA;VTC -.05%/°C
105	SNR-A480L40	6	ZnO	M942r	Varistor Volt 679-914V at 1.0mApk;Pd av 1.0W;Ip 4.0kA;VTC -.05%/°C
106	SNR-A510L40	6	ZnO	M942g	Varistor Volt 738-902V at 1.0mApk;Pd av 700mW;Ip 2.0kA;VTC -.05%/°C
107	SNR-A510L80	6	ZnO	M942r	Varistor Volt 721-970V at 1.0mApk;Pd av 1.0W;Ip 4.0kA;VTC -.05%/°C
108	SNR-A550L40	6	ZnO	M942h	Varistor Volt 795-972V at 1.0mApk;Pd av 700mW;Ip 2.0kA;VTC -.05%/°C
109	SNR-A550L80	6	ZnO	M942s	Varistor Volt 778-1060V at 1.0mApk;Pd av 1.0W;Ip 4.0kA;VTC -.05%/°C
110	SNR-A575L40	6	ZnO	M942j	Varistor Volt 830-1015V at 1.0mApk;Pd av 800mW;Ip 2.0kA;VTC -.05%/°C

SYMBOLS AND CODES EXPLAINED IN INTERPRETER

7. TRANSIENT SUPPRESSOR DIODES - Bipolar & Unipolar Types (Cont'd)

IN ORDER OF (1) TYPE (2) MAT AND (3) TYPE NO.

LINE No.	3 TYPE NUMBER	1 TYPE	2 MAT.	DWG. NO.	DESCRIPTION
1	SNR-A575L80	6	ZnO	M942s	Varistor Volt 813-1115V at 1.0mApk;Pd av 1.1W;Ip 4.0kA;VTC -.05%/°C
2	SNR-A1000L80	6	ZnO	M942k	Varistor Volt 1414-1730V at 1.0mApk;Pd av 900mW;Ip 2.0kA;VTC -.05%/°C
3	SNR-A1000L160	6	ZnO	M942t	Varistor Volt 1414-1730V at 1.0mA Pk;Pd Avg 1.3W;Ip 4.0kA;VTC -.05%/°C
4	SNR-D18M1	6	ZnO	M936	Varistor Volt 14.4-21.6V at 1.0mApk;Pd av 180mW;Ip 250A;VTC -.05%/°C
5	SNR-D18M3	6	ZnO	M936a	Varistor Volt 14.4-21.6V at 1.0mApk;Pd av 400mW;Ip 1.0kA;VTC -.05%/°C
6	SNR-D22L1	6	ZnO	M936	Varistor Volt 18.7-25.3V at 1.0mApk;Pd av 180mW;Ip 250A;VTC -.05%/°C
7	SNR-D22L3	6	ZnO	M936a	Varistor Volt 18.7-25.3V at 1.0mApk;Pd av 400mW;Ip 1.0kA;VTC -.05%/°C
8	SNR-D24K1	6	ZnO	M936	Varistor Volt 21.6-26.4V at 1.0mApk;Pd av 180mW;Ip 250A;VTC -.05%/°C
9	SNR-D24K4	6	ZnO	M936a	Varistor Volt 21.6-26.4V at 1.0mApk;Pd av 400mW;Ip 1.0kA;VTC -.05%/°C
10	SNR-D27L1	6	ZnO	M936	Varistor Volt 22.9-31.0V at 1.0mApk;Pd av 180mW;Ip 250A;VTC -.05%/°C
11	SNR-D27L4	6	ZnO	M936g	Varistor Volt 22.9-31.0V at 1.0mApk;Pd av 400mW;Ip 1.0kA;VTC -.05%/°C
12	SNR-D33K1	6	ZnO	M936	Varistor Volt 29.7-36.3V at 1.0mApk;Pd av 190mW;Ip 250A;VTC -.05%/°C
13	SNR-D33K5	6	ZnO	M936g	Varistor Volt 29.7-36.3V at 1.0mApk;Pd av 400mW;Ip 1.0kA;VTC -.05%/°C
14	SNR-D39K1	6	ZnO	M936b	Varistor Volt 35.1-42.9V at 1.0mApk;Pd av 200mW;Ip 250A;VTC -.05%/°C
15	SNR-D39K6	6	ZnO	M936g	Varistor Volt 35.1-42.9V at 1.0mApk;Pd av 450mW;Ip 1.0kA;VTC -.05%/°C
16	SNR-D47K1	6	ZnO	M936c	Varistor Volt 42.3-51.7V at 1.0mApk;Pd av 200mW;Ip 250A;VTC -.05%/°C
17	SNR-D47K7	6	ZnO	M936h	Varistor Volt 42.3-51.7V at 1.0mApk;Pd av 450mW;Ip 1.0kA;VTC -.05%/°C
18	SNR-D56K2	6	ZnO	M936c	Varistor Volt 50.4-61.6V at 1.0mApk;Pd av 220mW;Ip 250A;VTC -.05%/°C
19	SNR-D56K8	6	ZnO	M936j	Varistor Volt 50.4-61.6V at 1.0mApk;Pd av 450mW;Ip 1.0kA;VTC -.05%/°C
20	SNR-D68K2	6	ZnO	M936d	Varistor Volt 61.2-74.8V at 1.0mApk;Pd av 240mW;Ip 250A;VTC -.05%/°C
21	SNR-D68K10	6	ZnO	M936k	Varistor Volt 61.2-74.8V at 1.0mApk;Pd av 500mW;Ip 1.0kA;VTC -.05%/°C
22	SNR-D82K2	6	ZnO	M936e	Varistor Volt 73.8-90.2V at 1.0mApk;Pd av 250mW;Ip 250A;VTC -.05%/°C
23	SNR-D82K12	6	ZnO	M936m	Varistor Volt 73.8-90.2V at 1.0mApk;Pd av 500mW;Ip 1.0kA;VTC -.05%/°C
24	SNR-D100K3	6	ZnO	M936f	Varistor Volt 90-110V at 1.0mApk;Pd av 260mW;Ip 250A;VTC -.05%/°C
25	SNR-D100K15	6	ZnO	M936n	Varistor Volt 90-110V at 1.0mApk;Pd av 550mW;Ip 1.0kA;VTC -.05%/°C
26	SNR-D120K1	6	ZnO	M936	Varistor Volt 108-132V at 1.0mApk;Pd av 200mW;Ip 400A;VTC -.05%/°C
27	SNR-D120K6	6	ZnO	M936g	Varistor Volt 108-132V at 1.0mApk;Pd av 450mW;Ip 2.0kA;VTC -.05%/°C
28	SNR-D150K1	6	ZnO	M936b	Varistor Volt 135-165V at 1.0mApk;Pd av 200mW;Ip 400A;VTC -.05%/°C
29	SNR-D150K8	6	ZnO	M936g	Varistor Volt 135-165V at 1.0mApk;Pd av 450mW;Ip 2.0kA;VTC -.05%/°C
30	SNR-D180K1	6	ZnO	M936b	Varistor Volt 162-198V at 1.0mApk;Pd av 200mW;Ip 400A;VTC -.05%/°C
31	SNR-D180K10	6	ZnO	M936h	Varistor Volt 162-198V at 1.0mApk;Pd av 450mW;Ip 2.0kA;VTC -.05%/°C
32▼	V8SC1812(A)	6	ZnO	M1365	Vrms 4.0V;Ipeak 25A;Vvar 11V at 1mA max;Vclamp 30V at Ip 2A
33▼	V12SC1812(A)	6	ZnO	M1365	Vrms 6.0V;Ipeak 50A;Vvar 16V at 1mA max;Vclamp 37V at Ip 2A
34▼	V18SC1812(A)	6	ZnO	M1365	Vrms 10V;Ipeak 50A;Vvar 21.6V at 1mA max;Vclamp 44V at Ip 2A
35▼	V22SC1812(A)	6	ZnO	M1365	Vrms 14V;Ipeak 50A;Vvar 26V at 1mA max;Vclamp 51V at Ip 2A
36▼	V27SC1812(A)	6	ZnO	M1365	Vrms 17V;Ipeak 50A;Vvar 31.1V at 1mA max;Vclamp 59V at Ip 2A
37▼	V33SC1812(A)	6	ZnO	M1365	Vrms 20V;Ipeak 50A;Vvar 38V at 1mA max;Vclamp 67V at Ip 2A
38▼	V39SC1812(A)	6	ZnO	M1365	Vrms 25V;Ipeak 50A;Vvar 46V at 1mA max;Vclamp 79V at Ip 2A
39▼	V47SC1812(A)	6	ZnO	M1365	Vrms 30V;Ipeak 50A;Vvar 55V at 1mA max;Vclamp 90V at Ip 2A
40▼	V47ZA3(A)	6	ZnO	M936an	Vrms 30V;Ipeak 500A;Vvar 52V at 1mA max;Vclamp 89V at Ip 5A
41▼	V56ZA3(A)	6	ZnO	M936an	Vrms 35V;Ipeak 500A;Vvar 62V at 1mA max;Vclamp 103V at Ip 5A
42▼	V68ZA3(A)	6	ZnO	M936aq	Vrms 40V;Ipeak 500A;Vvar 75V at 1mA max;Vclamp 123V at Ip 5A
43▼	V82ZA4(A)	6	ZnO	M936aq	Vrms 50V;Ipeak 2.5kA;Vvar 91V at 1mA max;Vclamp 135V at Ip 25A
44▼	V100ZA4(A)	6	ZnO	M936aq	Vrms 60V;Ipeak 2.5kA;Vvar 110V at 1mA max;Vclamp 165V at Ip 25A
45▼	V112BB60(A)	6	ZnO	M1368a	Vrms 1.1kV;Ipeak 7.0kA;Vvar 2.06kV at 1mA max;Vclamp 3.1kV at Ip 200A
46▼	V120ZA4(A)	6	ZnO	M936an	Vrms 75V;Ipeak 2.5kA;Vvar 132V at 1mA max;Vclamp 200V at Ip 25A
47▼	V131BA60(A)	6	ZnO	M1368	Vrms 130V;Ipeak 5.0kA;Vvar 220V at 1mA max;Vclamp 360V at Ip 200A
48▼	V131DB40(A)	6	ZnO	M1367	Vrms 130V;Ipeak 30kA;Vvar 228V at 1mA max;Vclamp 360V at Ip 200A
49▼	V150ZA4(A)	6	ZnO	M936an	Vrms 95V;Ipeak 2.5kA;Vvar 165V at 1mA max;Vclamp 250V at Ip 25A
50▼	V151BA60(A)	6	ZnO	M1368	Vrms 150V;Ipeak 5.0kA;Vvar 242V at 1mA max;Vclamp 420V at Ip 200A
51▼	V151DB40(A)	6	ZnO	M1367	Vrms 150V;Ipeak 30kA;Vvar 268V at 1mA max;Vclamp 420V at Ip 200A
52▼	V180ZA5(A)	6	ZnO	M936an	Vrms 115V;Ipeak 2.5kA;Vvar 198V at 1mA max;Vclamp 300V at Ip 25A
53▼	V251BA60(A)	6	ZnO	M1368	Vrms 250V;Ipeak 5.0kA;Vvar 429V at 1mA max;Vclamp 650V at Ip 200A
54▼	V251DB40(A)	6	ZnO	M1367	Vrms 250V;Ipeak 30kA;Vvar 429V at 1mA max;Vclamp 660V at Ip 200A
55▼	V271BA60(A)	6	ZnO	M1368	Vrms 275V;Ipeak 5.0kA;Vvar 473V at 1mA max;Vclamp 720V at Ip 200A
56▼	V271DB40(A)	6	ZnO	M1367	Vrms 275V;Ipeak 3.0kA;Vvar 473V at 1mA max;Vclamp 730V at Ip 200A
57▼	V321BA60(A)	6	ZnO	M1368	Vrms 320V;Ipeak 5.0kA;Vvar 539V at 1mA max;Vclamp 820V at Ip 200A
58▼	V321DB40(A)	6	ZnO	M1367	Vrms 320V;Ipeak 3.0kA;Vvar 539V at 1mA max;Vclamp 830V at Ip 200A
59▼	V421DB40(A)	6	ZnO	M1367	Vrms 420V;Ipeak 4.0kA;Vvar 748V at 1mA max;Vclamp 1.16kV at Ip 200A
60▼	V481DB40(A)	6	ZnO	M1367	Vrms 480V;Ipeak 4.0kA;Vvar 825V at 1mA max;Vclamp 1.27kV at Ip 200A
61▼	V511DB40(A)	6	ZnO	M1367	Vrms 510V;Ipeak 4.0kA;Vvar 910V at 1mA max;Vclamp 1.4kV at Ip 200A
62▼	V571DB40(A)	6	ZnO	M1367	Vrms 575V;Ipeak 4.0kA;Vvar 1.0kV at 1mA max;Vclamp 1.55kV at Ip 200A
63▼	V660HE600(A)	6	ZnO	M1366	Vrms 660V;Ipeak 25kA;Vvar 1.16kV at 1mA max;Vclamp 1.85kV at Ip 300A
64▼	V660LA50A(A)	6	ZnO	M936ar	Vrms 660V;Ipeak 4.5kA;Vvar 1.2V at 1mA max;Vclamp 1.8kV at Ip 50A
65▼	V660LA100B(A)	6	ZnO	M936as	Vrms 660V;Ipeak 6.5kA;Vvar 1.1V at 1mA max;Vclamp 1.6kV at Ip 100A
66▼	V661DB40(A)	6	ZnO	M1367	Vrms 660V;Ipeak 4.0kA;Vvar 1.16kV at 1mA max;Vclamp 1.78kV at Ip 200A
67▼	V741DB40(A)	6	ZnO	M1367	Vrms 750V;Ipeak 4.0kA;Vvar 1.32kV at 1mA max;Vclamp 2.04kV at Ip 200A
68▼	V1000LA160B(A)	6	ZnO	M936at	Vrms 1.0kV;Ipeak 6.5kA;Vvar 1.6V at 1mA max;Vclamp 2.4kV at Ip 100A

8. STANDARD RECOVERY BRIDGE RECTIFIERS - Single Phase

IN ORDER OF: (1) IO MAX (2) PIV (3) @ TEMP & (4) TYPE NUMBER

STD RECOVERY BRIDGE RECTIFIER: 1-∅

LINE No.	4 TYPE NUMBER	2 PIV (V)	MAX AVG FWD DC CURRENT 1 Io MAX (A)	3 @ TEMP (°C)	MAX RATING SURGE CURR PEAK 1 Cy (A)	PULSE WIDTH (s)	MAX. TEMP (°C)	MAT	DRAWING No.
4	B1912B80C1500-1000								
		190			50	10m		Si	M1219
5	B2812B80C900-600								
		190			40	10m		Si	M1219
6▼	B40C800	190	900u	45A	50 §	10m	125J	Si	S257a
7▼	B80C800	190	900u	45A	50 §	10m	125J	Si	S257a
8	UGB6124ADa	11k	7.00m	45A	45	10m		Si	M1075c
9	D0.22/100x11	100k	220m	35A	20	10m	125J	Si	M1198
10	D0.22/125x31	125k	220m	35A	20	10m	125J	Si	M1198a
11	D0.22/150x31	150k	220m	35A	20	10m	125J	Si	M1198a
12	MB4-01	100	300m	50A	30	10m	125J	Si	M974
13	MB4-02	200	300m	50A	30	10m	125J	Si	M974
14	MB4-04	400	300m	50A	30	10m	125J	Si	M974
15	MB4-06	600	300m	50A	30	10m	125J	Si	M974
16	MB4-08	800	300m	50A	30	10m	125J	Si	M974
17	S5343	7.0k	.30	100A			100A	Si	M123
18♦	HV5	5.0k	350m	50A	50	8.3	135		M1352
19♦	HV8	8.0k	350m	50A	50	8.3	135		M1352
20♦	HV10	10k	350m	50A	50	8.3	135		M1352
21♦	HV12	12k	350m	50A	50	8.3	135		M1352
22♦	HV14	14k	350m	50A	50	8.3	135		M1352
23	SDA276H	1.5k	0.36	55C	2.5		150	Si	M1031b
24	SBR20*	2.0k	360m	55	2.5		150	Si	M1031b
25	SDA276J	2.0k	0.36	55C	2.5		150	Si	M1031b
26	SBR25F	2.5k	360m	55C	10		175J	Si	M1031b
27	SDA276K	2.5k	0.36	55C	2.5		150	Si	M1031b
28	SBR30*	3.0k	360m	55	14		150	Si	M1031b
29	SDA276L	3.0k	0.36	55C	2.5		150	Si	M1031b
30	S1YB10	100	400m	40A	30		150J	Si	M1291
31	S1YB20	200	400m	40A	30		150J	Si	M1291
32	S1YB40	400	400m	40A	30		150J	Si	M1291
33	S1YB60	600	400m	40A	30		150J	Si	M1291
34	CODI5514	100	.50	25$	20		100	Si	C231b
35	CODI5524	200	.50	25$	20		100	Si	C231b
36	CODI5534	300	.50	25$	20		100	Si	C231b
37	CODI5544	400	.50	25$	20		100	Si	C231b
38	CODI5554	500	.50	25$	20		100	Si	C231b
39	CODI5564	600	.50	25$	20		100	Si	C231b
40	H442*	8k	.50	50A	20	3.8m	100A	Si	C224
41	H443*	10k	.50	50A	20	3.8m	100A	Si	C224
42	S1WB10	100	.6	40A	30	8.3m	150S	Si	M1049
43	S1WB20	200	.6	40A	30	8.3m	150S	Si	M1049
44	S1WB40	400	.6	40A	30	8.3m	150S	Si	M1049
45	673-7	1.2k	0.6	25A	15	8.3m	150	Si	M1164
46	H440*	4k	.65	50A	20	3.8m	100A	Si	C224
47	H441*	6k	.65	50A	20	3.8m	100A	Si	C224
48	VSB51*	10	750m	40A	30	3.8m	150J	Si	M1089
49	VSB52*	20	750m	40A	30	3.8m	150J	Si	M1089
50	VSB53*	30	750m	40A	30	3.8m	150J	Si	M1089
51	VSB54*	40	750m	40A	30	3.8m	150J	Si	M1089
52♦	HVP5	5.0k	750m	60A	50	8.3	135		M1351
53♦	HVP8	8.0k	750m	60A	50	8.3	135		M1351
54♦	HVP10	10k	750m	60A	50	8.3	135		M1351
55♦	HVP12	12k	750m	60A	50	8.3	135		M1351
56♦	HVP14	14k	750m	60A	50	8.3	135		M1351
57♦	HVP15	15k	750m	60A	50	8.3	135		M1351
58♦	HVP16	16k	750m	60A	50	8.3	135		M1351
59	B40C800W*	90	800m	25A	50			Si	C209h
60	B60C800W*	150	800m	25A	50			Si	C209h
61	B125C800W*	300	800m	25A	50			Si	C209h
62	B250C800W*	600	800m	25A	50			Si	C209h
63	LBA-08	800	800m	50A	30	10m	150J	Si	M1280
64	B380C800W*	900	800m	25A	50			Si	C209h
65♦	B2806B40C900-600								
		100	850m	25	40	10m		Si	M1219
66	B1210L*	150	850m	45A	40	10m		Si	M1073
67	B1220L*	300	850m	45A	40	10m		Si	M1073
68	B1240L*	600	850m	45A	40	10m		Si	M1073
69▼	B40C800D	100	900m	45A	50 §	10m	125J	Si	M1162a
70▼	B40C800D1	100	900m	45A	50 §	10m	125J	Si	C268
71▼	B80C800D	190	900m	45A	50 §	10m	125J	Si	M1162a
72▼	B80C800D1	190	900m	45A	50 §	10m	125J	Si	C268
73▼	B125C800	190	900m	45A	50 §	10m	125J	Si	S257a
74▼	B250C800	190	900m	45A	50 §	10m	125J	Si	S257a
75▼	B125C800D	300	900m	45A	50 §	10m	125J	Si	M1162a
76▼	B125C800D1	300	900m	45A	50 §	10m	125J	Si	C268
77▼	B250C800D	600	900m	45A	50 §	10m	125J	Si	M1162a
78▼	B250C800D1	600	900m	45A	50 §	10m	125J	Si	C268
79	SDF10	10	1.0	40A	75	8.3m	125	Si	M1049a
80	SDF20	20	1.0	40A	75	8.3m	125	Si	M1049a
81	VM25*	25	1.0	40A	25	8.3m	150J	Si	M1089
82	W110*	25	1.0	65A	25	8.3m	150J	Si	M904
83	SDF30	30	1.0	40A	75	8.3m	125	Si	M1049a
84	SDF40	40	1.0	40A	75	8.3m	125	Si	M1049a
85	F903-10G	50	1.0		75			Si	C188d
86	F903B-10G	50	1.0		75			Si	M1033e
87	F903C-10G	50	1.0		75			Si	M1033f
88♦	A0503B20C700	50	1.0	25	25	10m		Si	M1089
89▼	WB100	50	1.0	25A	50	16m	125	Si	C209m
90	1DB050	50	1.0	40	30	8.3m	150	Si	M1089
91	BRS101	50	1.0	40A	50	8.3m	125A	Si	M1049a
92	CSB05	50	1.0	40A	30		150A	Si	M1089
93▼	DB1F(A)	50	1.0	40A	50	8.3m	150J		M1049c
94▼	DB101	50	1.0	40A	50	8.3m	150	Si	M1049a
95	DB101G	50	1.0	40A	50		150	Si	M1049a
96	DF005	50	1.0	40A	50	8.3m	125J	Si	M1049a
97	DF005M	50	1.0	40A	50	8.3m	125J	Si	M1049a
98	MSB05	50	1.0	40A	30		150J	Si	M1089
99	SDF50	50	1.0	40A	75	8.3m	150J	Si	M1049a
100	VM08*	50	1.0	40A	25	8.3m	150J	Si	M1089
101	BRR101	50	1.0	50A	30	8.3m	125	Si	C209k
102	PB101M	50	1.0	50A	30	8.3m	125J	Si	C257
103▼	RS101	50	1.0	50A	30	8.3m	125	Si	M1353
104▼	RS101G	50	1.0	50A	50	8.3m	150	Si	M1353
105	WL005M*	50	1.0	50	30		25A	Si	C209a
106	SDA276AF	50	1.0	55C	6.0		150	Si	M1031b
107	VE08*	50	1.0	65A	25	8.3m	150J	Si	M904
108♦	3N246	50	1.0	75A	30	16m	125	Si	M999
109	SDF60	60	1.0	40A	75	8.3m	150J	Si	M1049a
110	B40C1000W*	90	1.0	25A	50			Si	C209h
111	F903-11G	100	1.0		75			Si	C188d
112	F903B-11G	100	1.0		75			Si	M1033e
113	F903C-11G	100	1.0		75			Si	M1033f
114	1B4B42	100	1.0	25A	30	10m	150J	Si	M1089
115♦	A0506B40C700	100	1.0	25	25	10m		Si	M1089
116	DBB10B	100	1.0	25A	3.0		150J	Si△	M1229
117▼	WB101	100	1.0	25A	50	16m	125	Si	C209m
118	1DB100	100	1.0	40	30	8.3m	150	Si	M1089
119	BRS102	100	1.0	40A	50	8.3m	125A	Si	M1049a
120	CSB1	100	1.0	40A	30		150A	Si	M1089
121▼	DB1A(A)	100	1.0	40A	50	8.3m	150J		M1049c
122▼	DB102	100	1.0	40A	50	8.3m	150	Si	M1049a
123	DB102G	100	1.0	40A	50		150	Si	M1049a
124	DF01	100	1.0	40A	50	8.3m	125J	Si	M1049a
125	DF01M	100	1.0	40A	50	8.3m	125J	Si	M1049a
126	MSB1	100	1.0	40A	30		150J	Si	M1089
127	VM18*	100	1.0	40A	25	8.3m	150J	Si	M1089
128	BRR102	100	1.0	50A	30	8.3m	125	Si	C209k
129	LBA-01Z1	100	1.0	50A	45	10m	140J	Si	M1280
130	PB102M	100	1.0	50A	30	8.3m	125J	Si	C257
131▼	RS102	100	1.0	50A	30	8.3m	125	Si	M1353
132▼	RS102G	100	1.0	50A	50	8.3m	150	Si	M1353
133	SBR1F*	100	1.0	55	6.0		150	Si	M1031b
134	SDA276BF	100	1.0	55C	6.0		150	Si	M1031b
135	1B4B41	100	1.0	60A	50	10m	150J	Si	M969
136	DBA10B	100	1.0	60	50		150J	Si△	M969
137	VE18*	100	1.0	65A	25	8.3m	150J	Si	M904
138♦	3N247	100	1.0	75A	30	16m	125	Si	M999
139	B60C1000W*	150	1.0	25A	50			Si	C209h
140♦	B1210B60C1000-700								
		150	1.0	25	50	10m		Si	M1219
141	SBR15FF	150	1.0	55C	35		175J	Si	M1031b
142	B80C800W	180	1.0	25	50		150	Si	C209h
143	B80C1000W*	180	1.0	25A	50			Si	C209h
144	F903-12G	200	1.0		75			Si	C188d
145	F903B-12G	200	1.0		75			Si	M1033e
146	F903C-12G	200	1.0		75			Si	M1033f
147	1D4B42	200	1.0	25A	30	10m	150J	Si	M1089
148♦	A0512B80C700	200	1.0	25	25	10m		Si	M1089
149	DBB10C	200	1.0	25A	3.0		150J	Si△	M1229
150▼	WB102	200	1.0	25A	50	16m	125	Si	C209m
151	1DB200	200	1.0	40	30	8.3m	150	Si	M1089
152	BRS103	200	1.0	40A	50	8.3m	125A	Si	M1049a
153	CSB2	200	1.0	40A	30		150A	Si	M1089
154▼	DB1B(A)	200	1.0	40A	50	8.3m	150J		M1049c
155▼	DB103	200	1.0	40A	50	8.3m	150	Si	M1049a
156	DB103G	200	1.0	40A	50		150	Si	M1049a
157	DF02	200	1.0	40A	50	8.3m	125J	Si	M1049a
158	DF02M	200	1.0	40A	50	8.3m	125J	Si	M1049a
159	MSB2	200	1.0	40A	30		150J	Si	M1089
160	VM28*	200	1.0	40A	25	8.3m	150J	Si	M1089
161	BRR103	200	1.0	50A	30	8.3m	125	Si	C209k
162	LBA-02	200	1.0	50A	45	10m	150J	Si	M1280
163	LBA-02Z1	200	1.0	50A	45	10m	140J	Si	M1280
164	PB103M	200	1.0	50A	30	8.3m	125J	Si	C257
165▼	RS103	200	1.0	50A	30	8.3m	125	Si	M1353
166▼	RS103G	200	1.0	50A	50	8.3m	150	Si	M1353
167	WL02M*	200	1.0	50	30		25A	Si	C209a
168	SBR2F*	200	1.0	55	6.0		150	Si	M1031b
169	SDA276CF	200	1.0	55C	6.0		150	Si	M1031b
170	1D4B41	200	1.0	60A	50	10m	150J	Si	M969
171	DBA10C	200	1.0	60	50		150J	Si△	M969
172	VE27*	200	1.0	65A	25	8.3m	150J	Si	M904
173	VE28*	200	1.0	65A	25	8.3m	150J	Si	M904
174♦	3N248	200	1.0	75A	30	16m	125	Si	M999
175	F903-13G	300	1.0		75			Si	C188d
176	F903B-13G	300	1.0		75			Si	M1033e
177	F903C-13G	300	1.0		75			Si	M1033f
178	B125C1000W*	300	1.0	25A	50			Si	C209h
179♦	B1220B125C1000-700								
		300	1.0	25	50	10m		Si	M1219
180	F903-14G	400	1.0		75			Si	C188d
181	F903B-14G	400	1.0		75			Si	M1033e
182	F903C-14G	400	1.0		75			Si	M1033f
183♦	A0526B160C700	400	1.0	25	25	10m		Si	M1089
184	DBB10E	400	1.0	25A	3.0		150J	Si△	M1229
185▼	WB104	400	1.0	25A	50	16m	125	Si	C209m
186	1DB400	400	1.0	40	30	8.3m	150	Si	M1089
187	BRS104	400	1.0	40A	50	8.3m	125A	Si	M1049a
188	CSB4	400	1.0	40A	30		150A	Si	M1089
189▼	DB1D(A)	400	1.0	40A	50	8.3m	150J		M1049c
190▼	DB104	400	1.0	40A	50	8.3m	150	Si	M1049a
191	DB104G	400	1.0	40A	50		150	Si	M1049a
192	DF04	400	1.0	40A	50	8.3m	125J	Si	M1049a
193	DF04M	400	1.0	40A	50	8.3m	125J	Si	M1049a
194	MSB4	400	1.0	40A	30		150J	Si	M1089
195	VM48*	400	1.0	40A	25	8.3m	150J	Si	M1089
196	BRR104	400	1.0	50A	30	8.3m	125	Si	C209k
197	LBA-04	400	1.0	50A	45	10m	150J	Si	M1280
198	LBA-04Z1	400	1.0	50A	45	10m	140J	Si	M1280
199	PB104M	400	1.0	50A	30	8.3m	125J	Si	C257
200▼	RS104	400	1.0	50A	30	8.3m	125	Si	M1353
201▼	RS104G	400	1.0	50A	50	8.3m	150	Si	M1353
202	WL04M*	400	1.0	50	30		25A	Si	C209a
203	SBR4F*	400	1.0	55	25		150	Si	M1031b
204	SDA276DF	400	1.0	55C	6.0		150	Si	M1031b
205	1G4B41	400	1.0	60A	50	10m	150J	Si	M969
206	DBA10E	400	1.0	60	50		150J	Si△	M969
207	VE47*	400	1.0	65A	25	8.3m	150J	Si	M904
208	VE48*	400	1.0	65A	25	8.3m	150J	Si	M904
209♦	3N249	400	1.0	75A	30	16m	125	Si	M999
210	F903-15G	500	1.0		75			Si	C188d
211	F903B-15G	500	1.0		75			Si	M1033e
212	F903C-15	500	1.0		75			Si	M1033f
213	F903-16G	600	1.0		75			Si	C188d
214	F903B-16G	600	1.0		75			Si	M1033e
215	F903C-16	600	1.0		75			Si	M1033f

SYMBOLS AND CODES EXPLAINED IN INTERPRETER

8. STANDARD RECOVERY BRIDGE RECTIFIERS - Single Phase (Cont'd)

IN ORDER OF: (1) IO MAX (2) PIV (3) @ TEMP & (4) TYPE NUMBER

LINE No.	4 TYPE NUMBER	2 PIV (V)	MAX AVG FWD DC CURRENT 1 Io MAX (A)	3 @ TEMP (°C)	MAX RATING SURGE CURR PEAK 1 Cy (A)	PULSE WIDTH (s)	MAX. TEMP (°C)	MAT	DRAWING No.
1	1DMB60	600	1.0	25C	30		150J	Si	M1229
2	1J4B42	600	1.0	25A	30	10m	150J	Si	M1089
3♦	A040B250C700	600	1.0	25	25	10m		Si	M1089
4♦	A0540B250C700	600	1.0	25	25	10m		Si	M1089
5	B250C1000W*	600	1.0	25A	50			Si	C209h
6♦	B1240B250C1000-700								
		600	1.0	25	50	10m		Si	M1219
7	DBB10G	600	1.0	25A	3.0		150J	Si△	M1229
8▼	WB106	600	1.0	25A	50	16m	125	Si	C209m
9	1DB600	600	1.0	40	30	8.3m	150	Si	M1089
10	BRS105	600	1.0	40A	50	8.3m	125A	Si	M1049a
11	CSB6	600	1.0	40A	30		150A	Si	M1089
12▼	DB1M(A)	600	1.0	40A	50	8.3m	150J		M1049c
13▼	DB105	600	1.0	40A	50	8.3m	150	Si	M1049a
14	DB105G	600	1.0	40A	50		150	Si	M1049a
15	DF06	600	1.0	40A	50	8.3m	125J	Si	M1049a
16	DF06M	600	1.0	40A	50	8.3m	125J	Si	M1049a
17	MSB6	600	1.0	40A	30		150J	Si	M1089
18	VM68*	600	1.0	40A	25	8.3m	150J	Si	M189
19	BRR105	600	1.0	50A	30	8.3m	125	Si	C209k
20	LBA-06	600	1.0	50A	45	10m	150J	Si	M1280
21	PB105M	600	1.0	50A	30	8.3m	125J	Si	C257
22▼	RS105	600	1.0	50A	30	8.3m	125	Si	M1353
23▼	RS105G	600	1.0	50A	50	8.3m	150	Si	M1353
24	WL06M*	600	1.0	50	30		25A	Si	C209a
25	SDA276EF	600	1.0	55C	6.0		150	Si	M1031b
26	1J4B41	600	1.0	60A	50	10m	150J	Si	M969
27	DBA10G	600	1.0	60	50		150J	Si△	M969
28	VE67*	600	1.0	65A	25	8.3m	150J	Si	M904
29	VE68*	600	1.0	65A	25	8.3m	150J	Si	M904
30♦	3N250	600	1.0	75A	30	16m	125	Si	M999
31	BY179	800	1.0		25		125J	Si	M1030
32	F903-18G	800	1.0		75			Si	C188d
33	F903B-18G	800	1.0		75			Si	M1033e
34	F903C-18	800	1.0		75			Si	M1033f
35♦	A0553B320C700	800	1.0	25	25	10m		Si	M1089
36▼	WB108	800	1.0	25A	50	16m	125	Si	C209m
37	BRS106	800	1.0	40A	50	8.3m	125A	Si	M1049a
38	CSB8	800	1.0	40A	30		150A	Si	M1089
39▼	DB1N(A)	800	1.0	40A	50	8.3m	150J		M1049c
40▼	DB106	800	1.0	40A	50	8.3m	150	Si	M1049a
41	DB106G	800	1.0	40A	50		150	Si	M1049a
42	DF08	800	1.0	40A	50	8.3m	125J	Si	M1049a
43	DF08M	800	1.0	40A	50	8.3m	125J	Si	M1049a
44	MSB8	800	1.0	40A	30		150J	Si	M1089
45	VM88*	800	1.0	40A	25	8.3m	150J	Si	M1089
46	BRR106	800	1.0	50A	30	8.3m	125	Si	C209k
47	PB106M	800	1.0	50A	30	8.3m	125J	Si	C257
48▼	RS106	800	1.0	50A	30	8.3m	125	Si	M1353
49▼	RS106G	800	1.0	50A	50	8.3m	150	Si	M1353
50	WL08M*	800	1.0	50	30		25A	Si	C209a
51	SDA276FF	800	1.0	55C	6.0		150	Si	M1031b
52	VE87*	800	1.0	65A	25	8.3m	150J	Si	M904
53	VE88*	800	1.0	65A	25	8.3m	150J	Si	M904
54♦	3N251	800	1.0	75A	30	16m	125	Si	M999
55	B380C1000W*	900	1.0	25A	50			Si	C209h
56	F903-110G	1.0k	1.0		75			Si	C188d
57♦	B1280B500C1000-700								
		1.0k	1.0	25	50	10m		Si	M1219a
58	DIB10	1.0k	1.0	25	30		150J	Si	M1162
59▼	WB110	1.0k	1.0	25A	50	16m	125	Si	C209m
60	BRS107	1.0k	1.0	40A	50	8.3m	125A	Si	M1049a
61	CSB10	1.0k	1.0	40A	30		150A	Si	M1089
62▼	DB1P(A)	1.0k	1.0	40A	50	8.3m	150J		M1049c
63▼	DB107	1.0k	1.0	40A	50	8.3m	150	Si	M1049a
64	DB107G	1.0k	1.0	40A	50		150	Si	M1049a
65	DF10#B	1.0k	1.0	40A	50	8.3m	125J	Si	M1049a
66	MSB10	1.0k	1.0	40A	30		150J	Si	M1089
67	VM108*	1.0k	1.0	40A	25	8.3m	150J	Si	M1089
68▼	RS107	1.0k	1.0	50A	30	8.3m	125	Si	M1353
69▼	RS107G	1.0k	1.0	50A	50	8.3m	150	Si	M1353
70	WL10M*	1.0k	1.0	50	30		25A	Si	C209a
71	SDA276GF	1.0k	1.0	55C	6.0		150	Si	M1031b
72♦	3N252	1.0k	1.0	75A	30	16m	125	Si	M999
73	CTU-20	50	1.1	60A	40	10m	140J	Si△	M980
74	CTU-21	100	1.1	60A	40	10m	140J	Si△	M980
75	CTU-22	200	1.1	60A	40	10m	140J	Si△	M980
76	CTU-24	400	1.1	60A	40	10m	140J	Si△	M980
77	CTU-26	600	1.1	60A	40	10m	140J	Si△	M980
78	B40C1200S*	90	1.2	25A	50			Si	C216a
79	B40C1200W*	90	1.2	25A	50			Si	C209h
80	B40C1500/1000	100	1.2	45A	100	10m	150	Si	C205
81▼	B40C1500/1000Si								
		100	1.2	45A	50	10m	150A	Si	C205a
82▼	B40C1500/1000SiC								
		100	1.2	45A	80 §	10m	155J	Si	C234b
83	B1906L*	100	1.2	45A	40	10m		Si	M1073
84	BY164	120	1.2		25		150J	Si	M1030
85	CSKB40C800*	120	1.2	45A	50	10m	120J	Si	M1058
86	SKB1.2-01*	120	1.2	45A	50	10m	150J	Si	C219b
87	SKBB40C1000L5B								
		120	1.2	45A	50	10m	150J	Si	C234a
88	B60C1200S*	150	1.2	25A	50			Si	C216a
89	B60C1200W*	150	1.2	25A	50			Si	C209h
90	B80C1200S*	180	1.2	25A	50			Si	C216a
91	B80C1200W*	180	1.2	25A	50			Si	C209h
92▼	B80C1500/1000Si								
		190	1.2	45A	50	10m	150A	Si	C205a
93	B1912L*	190	1.2	45A	40	10m		Si	M1073
94	M4C1#B	200	1.2	40A	30	10m	130J	Si△	M117h
95	B80C1500/1000	200	1.2	45A	100	10m	150	Si	C205
96▼	B80C1500/1000SiC								
		200	1.2	45A	80 §	10m	155J	Si	C234b
97	SKB1.2-02*	200	1.2	45A	50	10m	150J	Si	C219b
98	B125C1200S*	300	1.2	25A	50			Si	C216a
99	B125C1200W*	300	1.2	25A	50			Si	C209h
100▼	B40C1000	300	1.2	45A	50 §	10m	125J	Si	S257a
101▼	B80C1000	300	1.2	45A	50 §	10m	125J	Si	S257a
102▼	B125C1000	300	1.2	45A	50 §	10m	125J	Si	S257a
103	B125C1500/1000								
		300	1.2	45A	50	10m	150J	Si	C205
104▼	B125C1500/1000SiC								
		300	1.2	45A	80 §	10m	155J	Si	C234b
105▼	B250C1000	300	1.2	45A	50 §	10m	125J	Si	S257a
106	M4E1#B	400	1.2	40A	30	10m	130J	Si△	M117h
107	CSKB80C800*	400	1.2	45A	50	10m	120J	Si	M1058
108	SKB1.2-04*	400	1.2	45A	50	10m	150J	Si	C219b
109	B250C1200S*	600	1.2	25A	50			Si	C216a
110	B250C1200W*	600	1.2	25A	50			Si	C209h
111	M4G1#B	600	1.2	40A	30	10m	130J	Si△	M117h
112	B250C1500/1000								
		600	1.2	45A	100	10m	150	Si	C205
113▼	B250C1500/1000SiC								
		600	1.2	45A	80 §	10m	155J	Si	C234b
114	CSKB250C800*	800	1.2	45A	50	10m	120J	Si	M1058
115	SKB1.2-08*	800	1.2	45A	50	10m	150J	Si	C219b
116	B380C1200S*	900	1.2	25A	50			Si	C216a
117	B380C1200W*	900	1.2	25A	50			Si	C209h
118	B380C1500/1000								
		900	1.2	45A	100	10m	150	Si	C205
119▼	B380C1500/1000SiC								
		900	1.2	45A	80 §	10m	155J	Si	C234b
120	CSKB500C800*	1.2k	1.2	45A	50	10m	120J	Si	M1058
121	SKB1.2-12*	1.2k	1.2	45A	50	10m	150J	Si	C219b
122	SKBa1.2-13*	1.3k	1.2	45A	55	8.3m	150J	Si	C219b
123	SKBaB500C1000L5B								
		1.3k	1.2	45A	55	8.3m	150J	Si	C234a
124	UGB3132AD	4.8k	1.3	45A	55	10m		Si	M1075a
125♦	B1906B40C1500-1000								
		100	1.4	25	50	10m		Si	M1219
126♦	C2520B125C1500-1000								
		300	1.4	25	100	10m		Si	M1219
127♦	C2540B250C1500-1000								
		600	1.4	25	100	10m		Si	M1219
128	MDA920A1*	25	1.5	50A	45		175J	Si△	M1112
129	BRR151	50	1.5	25A	50	8.3m	125	Si	C209k
130▼	RD151	50	1.5	25A	30	8.3m	125	Si	C208a
131	RW005M	50	1.5	25A	50		150S	Si	C209c
132	W005*	50	1.5	25	50		25A	Si	C209h
133	W005M*	50	1.5	25	50		150S	Si	C209c
134▼	WB150	50	1.5	25A	50	16m	125	Si	C209m
135	WCN005*	50	1.5	25	30		150S	Si	C208⊠
136	423FB1AB1	50	1.5	50A	50		150A	Si	C222g
137	BRF151	50	1.5	50A	50	8.3m	125	Si	C222m†
138▼	FBP005	50	1.5	50A	50			Si	M1357
139	KBP005	50	1.5	50A	50		150S	Si	C222
140	MDA920A2	50	1.5	50A	45		175J	Si	M1112
141	PBP151	50	1.5	50	50	8.3m	125	Si	C258
142	RB151F	50	1.5	50A	50		125A	Si	C209h
143	RB151G	50	1.5	50A	50		175A	Si	C209h
144▼	RD151G	50	1.5	50A	50	8.3m	150	Si	C208a
145	RKBP005	50	1.5	50A	50		150S	Si	C222
146▼	W005L	50	1.5	50A	50	8.3m	125	Si	C207
147▼	W005MG	50	1.5	50A	50	8.3m	150	Si	C208a
148	SBR05*	50	1.5	55	10		150	Si	M1031b
149	SDA276A	50	1.5	55C	10		150	Si	M1031b
150	CTM-20	50	1.5	60A	100	10m	140J	Si△	M980
151	FWL50	50	1.5	75	50	8.3m		Si	C222f
152	RB151	50	1.5	100C	50	8.0m	150S	Si	M
153	B40C1500W*	90	1.5	25A	50			Si	C209h
154	673-1	100	1.5	25A	25	8.3m	150	Si	M1164
155	673-1S	100	1.5	25A	25	8.3m	150	Si	M1165
156	BRR152	100	1.5	25A	50	8.3m	125	Si	C209k
157	CODI5314	100	1.5	25$	35		150	Si	C231b
158▼	RD152	100	1.5	25A	30	8.3m	125	Si	C208a
159▼	WB151	100	1.5	25A	50	16m	125	Si	C209m
160	1B4B1	100	1.5	50A	50	10m	150J	Si	M968
161▼	2W01	100	1.5	50A	50	8.3m	125	Si	C207
162	423AB1AB1	100	1.5	50A	50		150A	Si	C222g
163	BRF152	100	1.5	50A	50	8.3m	125	Si	C222m†
164▼	FBP01	100	1.5	50A	50			Si	M1357
165	KBP01	100	1.5	50A	50	8.3m	125J	Si	C222
166	MDA920A3	100	1.5	50A	45		175J	Si	M1112
167	PBP152	100	1.5	50	50	8.3m	125	Si	C258
168	RB152F	100	1.5	50A	50		125A	Si	C209h
169	RB152G	100	1.5	50A	50		175A	Si	C209h
170▼	RD152G	100	1.5	50A	50	8.3m	150	Si	C208a
171▼	W01L	100	1.5	50A	50	8.3m	125	Si	C207
172▼	W01MG	100	1.5	50A	50	8.3m	150	Si	C208a
173	SDA276B	100	1.5	55C	10		150	Si	M1031b
174	CTM-21	100	1.5	60A	100	10m	140J	Si△	M980
175	FWL100	100	1.5	75	50	8.3m		Si	C222f
176	RB152	100	1.5	100C	50	8.0m	150S	Si	M
177	CSKB40C1200*	120	1.5	45A	50	10m	120J	Si	M1059
178	SKBB40C1500L5B								
		120	1.5	45A	70	10m	150J	Si	C234a
179	B60C1500W*	150	1.5	25A	50			Si	C209h
180	B80C1500W*	180	1.5	25A	50			Si	C209h
181	673-2	200	1.5	25A	25	8.3m	150	Si	M1164
182	673-2S	200	1.5	25A	25	8.3m	150	Si	M1165
183	BRR153	200	1.5	25A	50	8.3m	125	Si	C209k
184	CODI5324	200	1.5	25$	35		150	Si	C231b
185▼	RD153	200	1.5	25A	30	8.3m	125	Si	C208a
186	RW02M	200	1.5	25A	50		150S	Si	C209c
187	W02*	200	1.5	25	50		25A	Si	C209h
188	W02M*	200	1.5	25	50		150S	Si	C209c
189	W02MA*	200	1.5	25	50		150S	Si	C209
190▼	WB152	200	1.5	25A	50	16m	125	Si	C209m
191	WCN02*	200	1.5	25	30		150S	Si	C208⊠
192	RB153	200	1.5	40A	50	8.0m	150S	Si	M
193	BY256	200	1.5	45A	50	20m	150J	Si	M1030
194	1D4B1	200	1.5	50A	50	10m	150J	Si	M968
195	423BB1AB1	200	1.5	50A	50		150A	Si	C222g
196	BRF153	200	1.5	50A	50	8.3m	125	Si	C222m†
197▼	FBP02	200	1.5	50A	50			Si	M1357
198	KBP02	200	1.5	50A	50		150S	Si	C222
199	MDA920A4	200	1.5	50A	45		175J	Si	M1112
200	PBP153	200	1.5	50	50	8.3m	125	Si	C258
201	RB153F	200	1.5	50A	50		125A	Si	C209h

SYMBOLS AND CODES EXPLAINED IN INTERPRETER

8. STANDARD RECOVERY BRIDGE RECTIFIERS - Single Phase (Cont'd)

IN ORDER OF: (1) IO MAX (2) PIV (3) @ TEMP & (4) TYPE NUMBER

LINE No.	4 TYPE NUMBER	2 PIV (V)	MAX AVG FWD DC CURRENT 1 Io MAX (A)	3 @ TEMP (°C)	MAX RATING SURGE CURR PEAK 1 Cy (A)	PULSE WIDTH (s)	MAX. TEMP (°C)	MAT	DRAWING No.
1	RB153G	200	1.5	50A	50		175A	Si	C209h
2▼	RD153G	200	1.5	50A	50	8.3m	150	Si	C208a
3	RKBP02	200	1.5	50A	50		150S	Si	C222
4▼	W02L	200	1.5	50A	50	8.3m	125	Si	C207
5▼	W02MG	200	1.5	50A	50	8.3m	150	Si	C208a
6	SBR2*	200	1.5	55	10		150	Si	M1031b
7	SDA276C	200	1.5	55C	10		150	Si	M1031b
8	CTM-22	200	1.5	60A	100	10m	140J	Si△	M980
9	FWL200	200	1.5	75	50	8.3m		Si	C222f
10	673-3	300	1.5	25A	25	8.3m	150	Si	M1164
11	673-3S	300	1.5	25A	25	8.3m	150	Si	M1165
12	B125C1500W*	300	1.5	25A	50			Si	C209h
13	CODI5334	300	1.5	25$	35		150	Si	C231b
14	MDA920A5	300	1.5	50A	45		175J	Si△	M1112
15	FWL300	300	1.5	75	50	8.3m		Si	C222f
16	673-4	400	1.5	25A	25	8.3m	150	Si	M1164
17	673-4S	400	1.5	25A	25	8.3m	150	Si	M1165
18	BRR154	400	1.5	25A	50	8.3m	125	Si	C209k
19	CODI5344	400	1.5	25$	35		150	Si	C231b
20▼	RD154	400	1.5	25A	30	8.3m	125	Si	C208a
21	RW04M	400	1.5	25A	50		150S	Si	C209c
22	W04*	400	1.5	25	50		25A	Si	C209h
23	W04M*	400	1.5	25	50		150S	Si	C209c
24	W04MA*	400	1.5	25	50		150S	Si	C209
25▼	WB154	400	1.5	25A	50	16m	125	Si	C209m
26	WCN04*	400	1.5	25	30		150S	Si	C208Ø
27	RB154	400	1.5	40A	50	8.0m	150S	Si	M
28	CSKB80C1200*	400	1.5	45A	50	10m	120J	Si	M1059
29	SKBB80C1500L5B	400	1.5	45A	70	10m	150J	Si	C234a
30	1G4B1	400	1.5	50A	50	10m	150J	Si	M968
31	423DB1AB1	400	1.5	50A	50		150A	Si	C222g
32	BRF154	400	1.5	50A	50	8.3m	125	Si	C222m†
33▼	FBP04	400	1.5	50A	50			Si	M1357
34	KBP04	400	1.5	50A	50		150S	Si	C222
35	MDA920A6	400	1.5	50A	45		175J	Si	M1112
36	PBP154	400	1.5	50	50	8.3m	125	Si	C258
37	RB154F	400	1.5	50A	50		125A	Si	C209h
38	RB154G	400	1.5	50A	50		175A	Si	C209h
39▼	RD154G	400	1.5	50A	50	8.3m	150	Si	C208a
40	RKBP04	400	1.5	50A	50		150S	Si	C222
41▼	W04L	400	1.5	50A	50	8.3m	125	Si	C207
42▼	W04MG	400	1.5	50A	50	8.3m	150	Si	C208a
43	SBR4*	400	1.5	55	10		150	Si	M1031b
44	SDA276D	400	1.5	55C	10		150	Si	M1031b
45	CTM-24	400	1.5	60A	100	10m	140J	Si△	M980
46	FWL400	400	1.5	75	50	8.3m		Si	C222f
47	673-5	500	1.5	25A	25	8.3m	150	Si	M1164
48	673-5S	500	1.5	25A	25	8.3m	150	Si	M1165
49	CODI5354	500	1.5	25$	35		150	Si	C231b
50	FWL500	500	1.5	75	50	8.3m		Si	C222f
51	673-6	600	1.5	25A	25	8.3m	150	Si	M1164
52	673-6S	600	1.5	25A	25	8.3m	150	Si	M1165
53	B250C1500W*	600	1.5	25A	50			Si	C209h
54	BRR155	600	1.5	25A	50	8.3m	125	Si	C209k
55	CODI5364	600	1.5	25$	35		150	Si	C231b
56▼	RD155	600	1.5	25A	30	8.3m	125	Si	C208a
57	RW06M	600	1.5	25A	50		150S	Si	C209c
58	W06*	600	1.5	25	50		25A	Si	C209h
59	W06M*	600	1.5	25	50		150S	Si	C209c
60	W06MA*	600	1.5	25	50		150S	Si	C209
61▼	WB156	600	1.5	25A	50	16m	125	Si	C209m
62	WCN06*	600	1.5	25	30		150S	Si	C208Ø
63	RB155	600	1.5	40A	50	8.0m	150S	Si	M
64	BY257	600	1.5	45A	50	20m	150J	Si	M1030
65	423MB1AB1	600	1.5	50A	50		150A	Si	C222g
66	BRF155	600	1.5	50A	50	8.3m	125	Si	C222m†
67▼	FBP06	600	1.5	50A	50			Si	M1357
68	KBP06	600	1.5	50A	50		150S	Si	C222
69	MDA920A7	600	1.5	50A	45		175J	Si	M1112
70	PBP155	600	1.5	50	50	8.3m	125	Si	C258
71	RB155F	600	1.5	50A	50		125A	Si	C209h
72	RB155G	600	1.5	50A	50		175A	Si	C209h
73▼	RD155G	600	1.5	50A	50	8.3m	150	Si	C208a
74	RKBP06	600	1.5	50A	50		150S	Si	C222
75▼	W06L	600	1.5	50A	50	8.3m	125	Si	C207
76▼	W06MG	600	1.5	50A	50	8.3m	150	Si	C208a
77	SDA276E	600	1.5	55C	10		150	Si	M1031b
78	CTM-26	600	1.5	60A	100	10m	140J	Si△	M980
79	FWL600	600	1.5	75	50	8.3m		Si	C222f
80	FWL700	700	1.5	75	50	8.3m		Si	C222f
81	BRR156	800	1.5	25A	50	8.3m	125	Si	C209k
82▼	RD156	800	1.5	25A	30	8.3m	125	Si	C208a
83	RW08M	800	1.5	25A	50		150S	Si	C209c
84	W08*	800	1.5	25	50		25A	Si	C209h
85	W08M*	800	1.5	25	50		150S	Si	C209c
86	W08MA*	800	1.5	25	50		150S	Si	C209
87▼	WB158	800	1.5	25A	50	16m	125	Si	C209m
88	WCN08*	800	1.5	25	30		150S	Si	C208Ø
89	RB156	800	1.5	40A	50	8.0m	150S	Si	M
90	CSKB250C1200*	800	1.5	45A	50	10m	120J	Si	M1059
91	SKBB250C1500L5B	800	1.5	45A	70	10m	150J	Si	C234a
92	423NB1AB1	800	1.5	50A	50		150A	Si	C222g
93	BRF156	800	1.5	50A	50	8.3m	125	Si	C222m†
94▼	FBP08	800	1.5	50A	50			Si	M1357
95	KBP08	800	1.5	50A	50		150S	Si	C222
96	MDA920A8	800	1.5	50A	45		175J	Si	M1112
97	PBP156	800	1.5	50	50	8.3m	125	Si	C258
98	RB156F	800	1.5	50A	50		125A	Si	C209h
99	RB156G	800	1.5	50A	50		175A	Si	C209h
100▼	RD156G	800	1.5	50A	50	8.3m	150	Si	C208a
101	RKBP08	800	1.5	50A	50		150S	Si	C222
102▼	W08L	800	1.5	50A	50	8.3m	125	Si	C207
103▼	W08MG	800	1.5	50A	50	8.3m	150	Si	C208a
104	SDA276F	800	1.5	55C	10		150	Si	M1031b
105	FWL800	800	1.5	75	50	8.3m		Si	C222f
106	B380C1500W*	900	1.5	25A	50			Si	C209h
107▼	RD157	1.0k	1.5	25A	30	8.3m	125	Si	C208a
108	RW10M	1.0k	1.5	25A	50		150S	Si	C209c
109	SBMB0*	1.0k	1.5	25	50		150	Si	C222e
110	W10M*	1.0k	1.5	25	50		150S	Si	C209c
111▼	2W10	1.0k	1.5	50A	50	8.3m	125	Si	C207
112	423PB1AB1	1.0k	1.5	50A	50		150A	Si	C222g
113▼	FBP10	1.0k	1.5	50A	50			Si	M1357
114	KBP10	1.0k	1.5	50A	50		150S	Si	C222
115	MDA920A9	1.0k	1.5	50A	45		175J	Si	M1112
116	RB157G	1.0k	1.5	50A	50		175A	Si	C209h
117▼	RD157G	1.0k	1.5	50A	50	8.3m	150	Si	C208a
118	RKBP10	1.0k	1.5	50A	50		150S	Si	C222
119▼	W10L	1.0k	1.5	50A	50	8.3m	125	Si	C207
120▼	W10MG	1.0k	1.5	50A	50	8.3m	150	Si	C208a
121	SBR10*	1.0k	1.5	55	50		150	Si	M1031b
122	SDA276G	1.0k	1.5	55C	10		150	Si	M1031b
123	FWL1000	1.0k	1.5	75	50	8.3m		Si	C222f
124	CSKB500C1200*	1.2k	1.5	45A	50	10m	120J	Si	M1059
125	SKBB500C1500L5B	1.2k	1.5	45A	70	10m	150J	Si	C234a
126	H439*	2k	1.5	50A	20	3.8m	100A	Si	C224
127	VGF0136AB	2.8k	1.5	45A	60	10m		Si	M1079
128♦	C2506B40C1600-1100	100	1.55	25	100	10m		Si	M1219
129♦	C2512B80C1600-1100	190	1.55	25	100	10m		Si	M1219
130	dcB100	50	1.6	50A	50		150A	Si	M1231
131	2B4B41	100	1.6	40A	50	10m	150J	Si	C219d
132	B40C2000/1500	100	1.6	45A	100	10m	150J	Si	C205
133	dcB101	100	1.6	50A	50		150A	Si	M1231
134	2D4B41	200	1.6	40A	50	10m	150J	Si	C219d
135	B80C2000/1500	200	1.6	45A	100	10m	150J	Si	C205
136	dcB102	200	1.6	50A	50		150A	Si	M1231
137	B125C2000/1500	300	1.6	45A	100	10m	150J	Si	C205
138	2G4B41	400	1.6	40A	50	10m	150J	Si	C219d
139	dcB104	400	1.6	50A	50		150A	Si	M1231
140	2J4B41	600	1.6	30A	50	10m	150J	Si	C219d
141	ZJ4B41	600	1.6	40A	50	10m	150J	Si	C219d
142▼	B40C1500	600	1.6	45A	100 §	10m	125J	Si	S257a
143▼	B80C1500	600	1.6	45A	100 §	10m	125J	Si	S257a
144▼	B125C1500	600	1.6	45A	100 §	10m	125J	Si	S257a
145▼	B250C1500	600	1.6	45A	100 §	10m	125J	Si	S257a
146	B250C2000/1500	600	1.6	45A	100	10m	150J	Si	C205
147	dcB106	600	1.6	50A	50		150A	Si	M1231
148	dcB108	800	1.6	50A	50		150A	Si	M1231
149	B380C2000/1500	900	1.6	45A	100	10m	150J	Si	C205
150	dcB110	1.0k	1.6	50A	50		150A	Si	M1231
151	SKBB40C1400*	120	1.7	45A	70	10m	150J	Si	C234
152	SKB2-02L5A*	200	1.7	45A	50	10m	150J	Si	M1060
153	SKBB500C1000L5B*	1.2	1.8	45A	50	10m	150J	Si	C234a
154	SKBB80C1000L5B	400	1.8	45A	50	10m	150J	Si	C234a
155	SKBB250C1000L5B*	800	1.8	45A	50	10m	150J	Si	C234a
156	B1310M*	150	1.9	45A	40	10m		Si	M1073a
157	B1320M*	300	1.9	45A	40	10m		Si	M1073a
158	B1340M*	600	1.9	45A	40	10m		Si	M1073a
159	B1380M*	1.0k	1.9	45A	40	10m		Si	M1073a
160	F903-20G	50	2.0		75			Si	C188d
161	F903B-20G	50	2.0		75			Si	M1033e
162	F903C-20	50	2.0		75			Si	M1033f
163	2W005	50	2.0	25A	50		150S	Si	C209h
164	BR805D	50	2.0	25A	50	8.0m	150S	Si	C222f
165♦	WB200	50	2.0	25A	50	16m	125	Si	C209n
166	S005*	50	2.0	35A	50			Si	C216a
167	423FB1AI1	50	2.0	40A	50		150A	Si	M1017
168	423FC1AI1	50	2.0	40A	50		150A	Si	M1017
169	2FB050*	50	2.0	50	50	8.0m	150	Si△	C222b
170	2FB050R*	50	2.0	50	50	8.0m	150	Si△	C222b
171	2KBP005	50	2.0	50A	60		150S	Si	C222
172	2SB50	50	2.0	50	50	8.3m	150	Si	C216d
173▼	2W005G	50	2.0	50A	50	8.3m	150	Si	C207
174	BFW50*	50	2.0	50A	50		100C	Si	C222b
175	BR805DF	50	2.0	50A	50		125A	Si	C222k
176	BR805DG	50	2.0	50A	50		125A	Si	C222k
177	BRF201	50	2.0	50A	60	8.3m	125	Si	C222m†
178	PBP201	50	2.0	50	60	8.3m	125	Si	C258
179	PD05	50	2.0	50A	50		125A	Si	M40a
180	RBA151	50	2.0	50C	50		125A	Si	C209d
181	RBC151	50	2.0	50C	50		125A	Si	C209f
182	RBD151	50	2.0	50C	50		125A	Si	C209g
183	RC201	50	2.0	50A	50		125A	Si	C209j
184	RS201	50	2.0	50A	50		125A	Si	C222
185	RS201F	50	2.0	50A	50		125A	Si	C222k
186	RS201G	50	2.0	50A	50		125A	Si	C222k
187▼	SB200	50	2.0	50A	60	16m	125	Si	M999
188♦	3N253	50	2.0	55A	60	16m	125	Si	M999
189	dc300.5	50	2.0	55A	50		150A	Si	M1196
190	NSS2	50	2.0	55C	50			Si	C216b
191♦	SDA117A	50	2.0	55C	10	8.3m	125C	Si	C216d
192	VS048*	50	2.0	60A	50	8.3m	150J	Si	C216d
193	FWLA50	50	2.0	75	50	8.3m		Si	C222f
194	F903-21G	100	2.0		75			Si	C188d
195	F903B-21G	100	2.0		75			Si	M1033e
196	F903C-21	100	2.0		75			Si	M1033f
197	S3WB10	100	2.0		120	8.3m	150J	Si†	M970b
198	BR81D	100	2.0	25A	50	8.0m	150S	Si	C222f
199♦	WB201	100	2.0	25A	50	16m	125	Si	C209n
200	S01*	100	2.0	35A	50			Si	C216a
201	3B4B41	100	2.0	40A	80	10m	150J	Si	C219e
202	423AB1AI1	100	2.0	40A	50		150A	Si	M1017
203	423AC1AI1	100	2.0	40A	50		150A	Si	M1017
204	DBA20B	100	2.0	40	40		150J	Si△	M970
205	DBA30B	100	2.0	40	80		150J	Si△	M970a
206	S2VB10	100	2.0	40A	40		150J	Si	C188
207	2FB100*	100	2.0	50	50	8.0m	150	Si△	C222b
208	2FB100R*	100	2.0	50	50	8.0m	150	Si△	C222b
209	2KBP01	100	2.0	50A	60	8.3m	125J	Si	C222

SYMBOLS AND CODES EXPLAINED IN INTERPRETER

8. STANDARD RECOVERY BRIDGE RECTIFIERS - Single Phase (Cont'd)

IN ORDER OF: (1) IO MAX (2) PIV (3) @ TEMP & (4) TYPE NUMBER

LINE No.	4 TYPE NUMBER	2 PIV (V)	MAX AVG FWD DC CURRENT 1 Io MAX (A)	3 @ TEMP (°C)	MAX RATING SURGE CURR PEAK 1 Cy (A)	PULSE WIDTH (s)	MAX. TEMP (°C)	MAT	DRAWING No.
1	2SB100	100	2.0	50	50	8.3m	150	Si	C216d
2▼	2W01G	100	2.0	50A	50	8.3m	150	Si	C207
3	BFW100*	100	2.0	50A	50		100C	Si	C222b
4	BR81DF	100	2.0	50A	50		125A	Si	C222k
5	BR81DG	100	2.0	50A	50		125A	Si	C222k
6	BRF202	100	2.0	50A	60	8.3m	125	Si	C222m†
7	PBP202	100	2.0	50	60	8.3m	125	Si	C258
8	PD10	100	2.0	50A	50		125A	Si	M40a
9	RBA152	100	2.0	50C	50		125A	Si	C209d
10	RBB152	100	2.0	50C	50		125A	Si	C209e
11	RBC152	100	2.0	50C	50		125A	Si	C209f
12	RBD152	100	2.0	50C	50		125A	Si	C209g
13	RC202	100	2.0	50A	50		125A	Si	C209j
14	RS202	100	2.0	50A	50		125A	Si	C222
15	RS202F	100	2.0	50A	50		125A	Si	C222k
16	RS202G	100	2.0	50A	50		125A	Si	C222k
17♦	SB201	100	2.0	50A	60	16m	125A	Si	M999
18♦	3N254	100	2.0	55A	60	16m	125	Si	M999
19	dc301	100	2.0	55A	50		150A	Si	M1196
20	NSS2-1	100	2.0	55C	50			Si	C216b
21♦	SDA117B	100	2.0	55C	10	8.3m	125C	Si	C216d
22	VS148*	100	2.0	60A	50	8.3m	150J	Si	C216d
23	FWLA100	100	2.0	75	50	8.3m		Si	C222f
24	F903-22G	200	2.0		75			Si	C188d
25	F903B-22G	200	2.0		75			Si	M1033e
26	F903C-22	200	2.0		75			Si	M1033f
27	PTC401*	200	2.0		35			Si	C222h
28	2SBF20	200	2.0	25	50	8.3m	150	Si	C216d
29	2W02	200	2.0	25A	50		150S	Si	C209h
30	BR82D	200	2.0	25A	50	8.0m	150S	Si	C222f
31♦	WB202	200	2.0	25A	50	16m	125	Si	C209n
32▼	S02#B	200	2.0	35A	50			Si	C216a
33	3D4B41	200	2.0	40A	80	10m	150J	Si	C219e
34	423BB1AI1	200	2.0	40A	50		150A	Si	M1017
35	423BC1AI1	200	2.0	40A	50		150A	Si	M1017
36	DBA20C	200	2.0	40	40		150J	Si△	M970
37	DBA30C	200	2.0	40	80		150J	Si△	M970a
38	S2VB20	200	2.0	40A	40		150J	Si	C188
39	2FB200*	200	2.0	50	50	8.0m	150	Si△	C222b
40	2FB200R*	200	2.0	50	50	8.0m	150	Si△	C222b
41	2KBP02	200	2.0	50A	60		150S	Si	C222
42	2SB200	200	2.0	50	50	8.3m	150	Si	C216d
43▼	2W02G	200	2.0	50A	50	8.3m	150	Si	C207
44	BFW200*	200	2.0	50A	50		100C	Si	C222b
45	BR82DF	200	2.0	50A	50		125A	Si	C222k
46	BR82DG	200	2.0	50A	50		125A	Si	C222k
47	BRF203	200	2.0	50A	60	8.3m	125	Si	C222m†
48	PBP203	200	2.0	50	60	8.3m	125	Si	C258
49	PD20	200	2.0	50A	50		125A	Si	M40a
50	RBA153	200	2.0	50C	50		125A	Si	C209d
51	RBB153	200	2.0	50C	50		125A	Si	C209e
52	RBC153	200	2.0	50C	50		125A	Si	C209f
53	RBD153	200	2.0	50C	50		125A	Si	C209g
54	RC203	200	2.0	50A	50		125A	Si	C209j
55	RS203	200	2.0	50A	50		125A	Si	C222
56	RS203F	200	2.0	50A	50		125A	Si	C222k
57	RS203G	200	2.0	50A	50		125A	Si	C222k
58♦	SB202	200	2.0	50A	60	16m	125A	Si	M999
59	SB203	200	2.0	50A	50		125A	Si	C219a
60♦	3N255	200	2.0	55A	60	16m	125	Si	M999
61	dc302	200	2.0	55A	50		150A	Si	M1196
62	NSS2-2	200	2.0	55C	50			Si	C216b
63♦	SDA117C	200	2.0	55C	10	8.3m	125C	Si	C216d
64	VS247*	200	2.0	60A	50	8.3m	150J	Si	C216d
65	VS248*	200	2.0	60A	50	8.3m	150J	Si	C216d
66	FWLA200	200	2.0	75	50	8.3m		Si	C222f
67	F903-23G	300	2.0		75			Si	C188d
68	F903B-23G	300	2.0		75			Si	M1033e
69	F903C-23	300	2.0		75			Si	M1033f
70	BFW300*	300	2.0	50A	50		100C	Si	C222b
71	NSS2-3	300	2.0	55C	50			Si	C216b
72	FWLA300	300	2.0	75	50	8.3m		Si	C222f
73	F903-24G	400	2.0		75			Si	C188d
74	F903B-24G	400	2.0		75			Si	M1033e
75	F903C-24	400	2.0		75			Si	M1033f
76	2SBF40	400	2.0	25	50	8.3m	150	Si	C216d
77	2W04	400	2.0	25A	50		150S	Si	C209h
78	BR84D	400	2.0	25A	50	8.0m	150S	Si	C222f
79♦	WB204	400	2.0	25A	50	16m	125	Si	C209n
80▼	S04#B	400	2.0	35A	50			Si	C216a
81	3G4B41	400	2.0	40A	80	10m	150J	Si	C219e
82	423DB1AI1	400	2.0	40A	50		150A	Si	M1017
83	423DC1AI1	400	2.0	40A	50		150A	Si	M1017
84	DBA20E	400	2.0	40	40		150J	Si△	M970
85	DBA30E	400	2.0	40	80		150J	Si△	M970a
86	S2VB40	400	2.0	40A	40		150J	Si	C188
87	MSKB80-70-1.5*								
		400	2.0	45A	50	10m	150J	Si	M1064
88	2FB400*	400	2.0	50	50	8.0m	150	Si△	C222b
89	2FB400R*	400	2.0	50	50	8.0m	150	Si△	C222b
90	2KBP04	400	2.0	50A	60		150S	Si	C222
91	2SB400	400	2.0	50	50	8.3m	150	Si	C216d
92▼	2W04G	400	2.0	50A	50	8.3m	150	Si	C207
93	BFW400*	400	2.0	50A	50		100C	Si	C222b
94	BR84DF	400	2.0	50A	50		125A	Si	C222k
95	BR84DG	400	2.0	50A	50		125A	Si	C222k
96	BRF204	400	2.0	50A	60	8.3m	125	Si	C222m†
97	PBP204	400	2.0	50	60	8.3m	125	Si	C258
98	PD40	400	2.0	50A	50		125A	Si	M40a
99	RBA154	400	2.0	50C	50		125A	Si	C209d
100	RBC154	400	2.0	50C	50		125A	Si	C209f
101	RBD154	400	2.0	50C	50		125A	Si	C209g
102	RC204	400	2.0	50A	50		125A	Si	C209j
103	RS204	400	2.0	50A	50		125A	Si	C222
104	RS204F	400	2.0	50A	50		125A	Si	C222k
105	RS204G	400	2.0	50A	50		125A	Si	C222k
106♦	SB204	400	2.0	50A	60	16m	125A	Si	M999
107♦	3N256	400	2.0	55A	60	16m	125	Si	M999
108	dc304	400	2.0	55A	50		150A	Si	M1196
109	NSS2-4	400	2.0	55C	50			Si	C216b
110♦	SDA117D	400	2.0	55C	10	8.3m	125C	Si	C216d
111	VS447*	400	2.0	60A	50	8.3m	150J	Si	C216d
112	VS448*	400	2.0	60A	50	8.3m	150J	Si	C216d
113	FWLA400	400	2.0	75	50	8.3m		Si	C222f
114	F903-25G	500	2.0		75			Si	C188d
115	F903B-25G	500	2.0		75			Si	M1033e
116	F903C-25	500	2.0		75			Si	M1033f
117	BFW500*	500	2.0	50A	50		100C	Si	C222b
118	FWLA500	500	2.0	75	50	8.3m		Si	C222f
119	F903-26G	600	2.0		75			Si	C188d
120	F903B-26G	600	2.0		75			Si	M1033e
121	F903C-26	600	2.0		75			Si	M1033f
122	PTC402*	600	2.0		35			Si	C222h
123	2SBF60	600	2.0	25	50	8.3m	150	Si	C216d
124	2W06	600	2.0	25A	50		150S	Si	C209h
125	BR86D	600	2.0	25A	50	8.0m	150S	Si	C222f
126♦	WB206	600	2.0	25A	50	16m	125	Si	C209n
127	S06*	600	2.0	35A	50			Si	C216a
128	3J4B41	600	2.0	40A	80	10m	150J	Si	C219e
129	423MB1AI1	600	2.0	40A	50		150A	Si	M1017
130	423MC1AI1	600	2.0	40A	50		150A	Si	M1017
131	DBA30G	600	2.0	40	80		150J	Si△	M970a
132	2FB600*	600	2.0	50	50	8.0m	150	Si△	C222b
133	2FB600R*	600	2.0	50	50	8.0m	150	Si△	C222b
134	2KBP06	600	2.0	50A	60		150S	Si	C222
135	2SB600	600	2.0	50	50	8.3m	150	Si	C216d
136▼	2W06G	600	2.0	50A	50	8.3m	150	Si	C207
137	BFW600*	600	2.0	50A	50		100C	Si	C222b
138	BR86DF	600	2.0	50A	50		125A	Si	C222k
139	BR86DG	600	2.0	50A	50		125A	Si	C222k
140	BRF205	600	2.0	50A	60	8.3m	125	Si	C222m†
141	PBP205	600	2.0	50	60	8.3m	125	Si	C258
142	PD60	600	2.0	50A	50		125A	Si	M40a
143	RBA155	600	2.0	50C	50		125A	Si	C209d
144	RBC155	600	2.0	50C	50		125A	Si	C209f
145	RBD155	600	2.0	50C	50		125A	Si	C209g
146	RC205	600	2.0	50A	50		125A	Si	C209j
147	RS205	600	2.0	50A	50		125A	Si	C222
148	RS205F	600	2.0	50A	50		125A	Si	C222k
149	RS205G	600	2.0	50A	50		125A	Si	C222k
150	SB205	600	2.0	50A	50		125A	Si	C219a
151♦	SB206	600	2.0	50A	60	16m	125A	Si	M999
152♦	3N257	600	2.0	55A	60	16m	125	Si	M999
153	dc306	600	2.0	55A	50		150A	Si	M1196
154	NSS2-6	600	2.0	55C	50			Si	C216b
155♦	SDA117E	600	2.0	55C	10	8.3m	125C	Si	C216d
156	VS647*	600	2.0	60A	50	8.3m	150J	Si	C216d
157	VS648*	600	2.0	60A	50	8.3m	150J	Si	C216d
158	FWLA600	600	2.0	75	50	8.3m		Si	C222f
159	FWLA700	700	2.0	75	50	8.3m		Si	C222f
160	F903-28G	800	2.0		75			Si	C188d
161	F903B-28G	800	2.0		75			Si	M1033e
162	F903C-28	800	2.0		75			Si	M1033f
163	2SBF80	800	2.0	25	50	8.3m	150	Si	C216d
164	2W08	800	2.0	25A	50		150S	Si	C209h
165	BR88D	800	2.0	25A	50	8.0m	150S	Si	C222f
166♦	WB208	800	2.0	25A	50	16m	125	Si	C209n
167	423NB1AI1	800	2.0	40A	50		150A	Si	M1017
168	423NC1AI1	800	2.0	40A	50		150A	Si	M1017
169	MSKB250-220-1.5*								
		800	2.0	45A	50	10m	150J	Si	M1064
170	2FB800*	800	2.0	50	50	8.0m	150	Si△	C222b
171	2FB800R*	800	2.0	50	50	8.0m	150	Si△	C222b
172	2KBP08	800	2.0	50A	60		150S	Si	C222
173	2SB800	800	2.0	50	50	8.3m	150	Si	C216d
174▼	2W08G	800	2.0	50A	50	8.3m	150	Si	C207
175	BFW800*	800	2.0	50A	50		100C	Si	C222b
176	BR88DF	800	2.0	50A	50		125A	Si	C222k
177	BR88DG	800	2.0	50A	50		125A	Si	C222k
178	BRF206	800	2.0	50A	60	8.3m	125	Si	C222m†
179	PBP206	800	2.0	50	60	8.3m	125	Si	C258
180	PD80	800	2.0	50A	50		125A	Si	M40a
181	RBA156	800	2.0	50C	50		125A	Si	C209d
182	RBB156	800	2.0	50C	50		125A	Si	C209e
183	RBC156	800	2.0	50C	50		125A	Si	C209f
184	RBD156	800	2.0	50C	50		125A	Si	C209g
185	RC206	800	2.0	50A	50		125A	Si	C209j
186	RS206	800	2.0	50A	50		125A	Si	C222
187	RS206F	800	2.0	50A	50		125A	Si	C222k
188	RS206G	800	2.0	50A	50		125A	Si	C222k
189▼	SB208	800	2.0	50A	60	16m	125	Si	M999
190♦	3N258	800	2.0	55A	60	16m	125	Si	M999
191	dc308	800	2.0	55A	50		150A	Si	M1196
192	NSS2-8	800	2.0	55C	50			Si	C216b
193♦	SDA117F	800	2.0	55C	10	8.3m	125C	Si	C216d
194	VS847*	800	2.0	60A	50	8.3m	150J	Si	C216d
195	VS848*	800	2.0	60A	50	8.3m	150J	Si	C216d
196	FWLA800	800	2.0	75	50	8.3m		Si	C222f
197	2SBF100	1.0k	2.0	25	50	8.3m	150	Si	C216d
198	BR810D	1.0k	2.0	25A	50	8.0m	150S	Si	C222f
199♦	WB210	1.0k	2.0	25A	50	16m	125	Si	C209n
200	S10*	1.0k	2.0	35A	50			Si	C216a
201	2FB1000*	1.0k	2.0	50	50	8.0m	150	Si△	C222b
202	2FB1000R*	1.0k	2.0	50	50	8.0m	150	Si△	C222b
203	2KBP10	1.0k	2.0	50A	60		150S	Si	C222
204	2SB1000	1.0k	2.0	50	50	8.3m	150	Si	C216d
205▼	2W10G	1.0k	2.0	50A	50	8.3m	150	Si	C207
206	BFW1000*	1.0k	2.0	50A	50		100C	Si	C222b
207	BR810DF	1.0k	2.0	50A	50		125A	Si	C222k
208	BR810DG	1.0k	2.0	50A	50		125A	Si	C222k
209	RBA157	1.0k	2.0	50C	50		125A	Si	C209d
210	RBB157	1.0k	2.0	50C	50		125A	Si	C209e
211	RBC157	1.0k	2.0	50C	50		125A	Si	C209f
212	RBD157	1.0k	2.0	50C	50		125A	Si	C209g
213	RC207	1.0k	2.0	50A	50		125A	Si	C209j
214	RS207	1.0k	2.0	50A	50		125A	Si	C222
215	RS207F	1.0k	2.0	50A	50		125A	Si	C222k
216	RS207G	1.0k	2.0	50A	50		125A	Si	C222k
217	SB207	1.0k	2.0	50A	50		125A	Si	C219a
218▼	SB210	1.0k	2.0	50A	60	16m	125	Si	M999

SYMBOLS AND CODES EXPLAINED IN INTERPRETER

8. STANDARD RECOVERY BRIDGE RECTIFIERS - Single Phase (Cont'd)

IN ORDER OF: (1) IO MAX (2) PIV (3) @ TEMP & (4) TYPE NUMBER

LINE No.	4 TYPE NUMBER	2 PIV (V)	MAX AVG FWD DC CURRENT 1 Io MAX (A)	3 @ TEMP (°C)	MAX RATING SURGE CURR PEAK 1 Cy (A)	PULSE WIDTH (s)	MAX. TEMP (°C)	MAT	DRAWING No.
1♦	3N259	1.0k	2.0	55A	60	16m	125	Si	M999
2	dc310	1.0k	2.0	55A	50		150A	Si	M1196
3	NSS2-10	1.0k	2.0	55C	50			Si	C216b
4♦	SDA117G	1.0k	2.0	55C	10	8.3m	125C	Si	C216d
5	VS1048*	1.0k	2.0	60A	50	8.3m	150J	Si	C216d
6	FWLA1000	1.0k	2.0	75	50	8.3m		Si	C222f
7	MSKaB500-445-1.5*	1.3k	2.0	45A	50	10m	150J	Si	M1064
8♦	MSKaB660-585-1.5*								
9	RBB151	1.7k 50k	2.0	45 50C	50		125A	Si Si	M1064 C209e
10♦	B1310B60C2300-1400								
11♦	B1320B125C2300-1400	150 300	2.2	25 25	50 50	10m 10m		Si Si	M1219b M1219b
12♦	B1340B250C2300-1400	600	2.2	25	50	10m		Si	M1219b
13♦	B1380B500C2300-1400								
14	S3WB20	1.0k 200	2.2 2.3	25 25	50 120	10m	150J	Si Si†	M1219b M970b
15	S3WB40	400	2.3	25	120		150J	Si†	M970b
16	C2120M*	300	2.4	45A	80	10m		Si	M1073a
17	C2140M*	600	2.4	45A	80	10m		Si	M1073a
18	C2340N*	600	2.4	45A	80	10m		Si	M1073b
19	C2180M*	1.0k	2.4	45A	80	10m		Si	M1073a
20	BRF251	50	2.5	55A	150	8.3m	125	Si	C222n
21	KBF005	50	2.5	55A	150		150S	Si	C222a
22	PBF251	50	2.5	55A	150	8.3m	150J	Si	M1030b
23	697-1	100	2.5	25A	80	8.3m	150	Si	M1164
24	BRF252	100	2.5	55A	150	8.3m	125	Si	C222n
25	KBF01	100	2.5	55A	150	8.3m	150J	Si	C222a
26	PBF252	100	2.5	55A	150	8.3m	150J	Si	M1030b
27	697-2	200	2.5	25A	80	8.3m	150	Si	M1164
28	S3VC20	200	2.5	40A	120		150J	Si	C190a
29	BRF253	200	2.5	55A	150	8.3m	125	Si	C222n
30	KBF02	200	2.5	55A	150		150S	Si	C222a
31	PBF253	200	2.5	55A	150	8.3m	150J	Si	M1030b
32	697-3	300	2.5	25A	80	8.3m	150	Si	M1164
33	697-4	400	2.5	25A	80	8.3m	150	Si	M1164
34	SKB2-04L5A*	400	2.5	45A	50	10m	150J	Si	M1060
35	SKBB80C1400*	400	2.5	45A	70	10m	150J	Si	C234
36	BRF254	400	2.5	55A	150	8.3m	125	Si	C222n
37	KBF04	400	2.5	55A	150		150S	Si	C222a
38	PBF254	400	2.5	55A	150	8.3m	150J	Si	M1030b
39	697-5	500	2.5	25A	80	8.3m	150	Si	M1164
40	697-6	600	2.5	25A	80	8.3m	150	Si	M1164
41	BRF255	600	2.5	55A	150	8.3m	125	Si	C222n
42	KBF06	600	2.5	55A	150		150S	Si	C222a
43	PBF255	600	2.5	55A	150	8.3m	150J	Si	M1030b
44	SKB2-08L5A*	800	2.5	45A	50	10m	150J	Si	M1060
45	SKBB250C1400*	800	2.5	45A	70	10m	150J	Si	C234
46	BRF256	800	2.5	55A	150	8.3m	125	Si	C222n
47	KBF08	800	2.5	55A	150		150S	Si	C222a
48	PBF256	800	2.5	55A	150	8.3m	150J	Si	M1030b
49	KBF10	1.0k	2.5	55A	150		150S	Si	C222a
50	PBF257	1.0k	2.5	55A	150	8.3m	150J	Si	M1030b
51	SKB2-12L5A*	1.2k	2.5	45A	50	10m	150J	Si	M1060
52	SKBB500C1400*	1.3k	2.5	45A	70	10m	150J	Si	C234
53	S4VB10	100	2.6	40A	80		150J	Si	C188a
54	S4VB20	200	2.6	40A	80		150J	Si	C188a
55	DBA40E	400	2.6	40	80		150J	Si△	M970a
56	S4VB40	400	2.6	40A	80		150J	Si	C188a
57	B40C3700/2200	100	2.7	45A	150	10m	150	Si	C206
58▼	B40C3700/2200Si	100	2.7	45A	100	10m	150A	Si	C258a
59▼	B40C3700/2200SiC								
		100	2.7	45A	100 §	10m	155J	Si	C206b
60	C1406M*	100	2.7	45A	80	10m		Si	M1073a
61	C2206N*	100	2.7	45A	80	10m		Si	M1073b
62	SKBB40C3200-2200*	120	2.7	45A	100	10m	150J	Si	M1063
63	SKBB40C3701-2201*								
		120	2.7	45A	115	10m	150J	Si	M1287
64▼	B80C3700/2200Si	190	2.7	45A	100	10m	150A	Si	C258a
65	C1412M*	190	2.7	45A	80	10m		Si	M1073a
66	C2212N*	190	2.7	45A	80	10m		Si	M1073b
67	B80C3700/2200	200	2.7	45A	150	10m	150	Si	C206
68▼	B80C3700/2200SiC	200	2.7	45A	100 §	10m	155J	Si	C206b
69	B125C3700/2200								
		300	2.7	45A	150	10m	150J	Si	C206a
70▼	B125C3700/2200Si	300	2.7	45A	100	10m	150A	Si	C258a
71▼	B125C3700/2200SiC	300	2.7	45A	100 §	10m	155J	Si	C206b
72	C2220N*	300	2.7	45A	80	10m		Si	M1073b
73	SKBB80C3200-2200*	400	2.7	45A	100	10m	150J	Si	M1063
74	SKBB80C3701-2201*								
		400	2.7	45A	115	10m	150J	Si	M1287
75	B250C3700/2200	600	2.7	45A	150	10m	150J	Si	C206a
76▼	B250C3700/2200SiC	600	2.7	45A	100 §	10m	155J	Si	C206b
77	SKBB250C3200-2200*								
		800	2.7	45A	100	10m	150J	Si	M1063
78	SKBB250C3701-2201*	800	2.7	45A	115	10m	150J	Si	M1287
79	B380C3700/2200	900	2.7	45A	150	10m	150J	Si	C206a
80▼	B380C3700/2200SiC								
		900	2.7	45A	100 §	10m	155J	Si	C206b
81	SKBaB500C3200-2200*	1.3k	2.7	45A	110	8.3m	150J	Si	M1063
82	SKBB500C3200-2200*	1.3k	2.7	45A	100	10m	150J	Si	M1063
83♦	C2120B125C3000-1800								
		300	2.8	25	100	10m		Si	M1219b
84♦	C2140B250C3000-1800	600	2.8	25	100	10m		Si	M1219b
85♦	C2180B500C3000-1800								
		1.0k	2.8	25	100	10m		Si	M1219b
86	VGB0103AAa	1.1k	2.8	45A	60	10m		Si	M1078
87	VGB0103CAa	1.1k	2.8	45A	60	10m		Si	M1078
88	VGB0104AAa	1.4k	2.8	45A	60	10m		Si	M1078
89	VGB0104CAa	1.4k	2.8	45A	60	10m		Si	M1078
90	BR305	50	3.0	40A	50		125A	Si	C219a
91	BR305F	50	3.0	40A	50		125A	Si	C219a
92	KBC3005	50	3.0	45A	100	8.3m	150J	Si	M1284
93	RKBC3005	50	3.0	45A	100	8.3m	150J	Si	M1284
94	3FB050R*	50	3.0	50	250	8.0m	150	Si△	C222c
95	423FB1AF1	50	3.0	50A	50		150A	Si	M1232
96	BR305G	50	3.0	50A	50		125A	Si	C219a
97	BRS301	50	3.0	50A	50	8.3m	125	Si	C219h
98	KBPC005	50	3.0	50C	50		150S	Si	C214
99	KBPC1005*	50	3.0	50C	50		150S	Si	
100	RKBPC1005	50	3.0	50	50		150S	Si	C216a
101	SB305	50	3.0	50A	50		175B	Si	C219m
102	KBL005	50	3.0	100A	200		150S	Si	C222a
103	M4B32	100	3.0	25A	100	10m	150J	Si	C219l♦
104	BR31	100	3.0	40A	50		125A	Si	C219a
105	BR31F	100	3.0	40A	50		125A	Si	C219a
106	KBC301	100	3.0	45A	100	8.3m	150J	Si	M1284
107	RKBC301	100	3.0	45A	100	8.3m	150J	Si	M1284
108	3FB100R*	100	3.0	50	250	8.0m	150	Si△	C222c
109	423AB1AF1	100	3.0	50A	50		150A	Si	M1232
110	BR31G	100	3.0	50A	50		125A	Si	C219a
111	BRS302	100	3.0	50A	50	8.3m	125	Si	C219h
112	SB310	100	3.0	50A	50		175B	Si	C219m
113	M4C32	200	3.0	25A	100	10m	150J	Si	C219l♦
114	BR32	200	3.0	40A	50		125A	Si	C219a
115	BR32F	200	3.0	40A	50		125A	Si	C219a
116	KBC302	200	3.0	45A	100	8.3m	150J	Si	M1284
117	RKBC302	200	3.0	45A	100	8.3m	150J	Si	M1284
118	3FB200R*	200	3.0	50	250	8.0m	150	Si△	C222c
119	423BB1AF1	200	3.0	50A	50		150A	Si	M1232
120	BR32G	200	3.0	50A	50		125A	Si	C219a
121	BRS303	200	3.0	50A	50	8.3m	125	Si	C219h
122	KBPC02	200	3.0	50C	50		150S	Si	C214
123	KBPC02A	200	3.0	50C	50		150S	Si	C214
124	KBPC102*	200	3.0	50C	50		150S	Si	
125	KBPC102A	200	3.0	50C	50		150S	Si	C216a
126	RKBPC102	200	3.0	50	50		150S	Si	C216a
127	SB320#B	200	3.0	50A	50		175B	Si	C219m
128	KBL02	200	3.0	100A	200		150S	Si	C222a
129	3SBMB4F*	400	3.0	25	150		150	Si	C222d
130	M4E32	400	3.0	25A	100	10m	150J	Si	C219l♦
131	BR34	400	3.0	40A	50		125A	Si	C219a
132	BR34F	400	3.0	40A	50		125A	Si	C219a
133	KBC304	400	3.0	45A	100	8.3m	150J	Si	M1284
134	RKBC304	400	3.0	45A	100	8.3m	150J	Si	M1284
135	3FB400R*	400	3.0	50	250	8.0m	150	Si△	C222c
136	423DB1AF1	400	3.0	50A	50		150A	Si	M1232
137	BR34G	400	3.0	50A	50		125A	Si	C219a
138	BRS304	400	3.0	50A	50	8.3m	125	Si	C219h
139	KBPC04	400	3.0	50C	50		150S	Si	C214
140	KBPC04A	400	3.0	50C	50		150S	Si	C214
141	KBPC104*	400	3.0	50C	50		150S	Si	
142	KBPC104A	400	3.0	50C	50		150S	Si	C216a
143	RKBPC104	400	3.0	50	50		150S	Si	C216a
144	SB340#B	400	3.0	50A	50		175B	Si	C219m
145	KBL04	400	3.0	100A	200		150S	Si	C222a
146	BR36	600	3.0	40A	50		125A	Si	C219a
147	BR36F	600	3.0	40A	50		125A	Si	C219a
148	KBC306	600	3.0	45A	100	8.3m	150J	Si	M1284
149	RKBC306	600	3.0	45A	100	8.3m	150J	Si	M1284
150	3FB600R*	600	3.0	50	250	8.0m	150	Si△	C222c
151	423MB1AF1	600	3.0	50A	50		150A	Si	M1232
152	BR36G	600	3.0	50A	50		125A	Si	C219a
153	BRS305	600	3.0	50A	50	8.3m	125	Si	C219h
154	KBPC06	600	3.0	50C	50		150S	Si	C214
155	KBPC06A	600	3.0	50C	50		150S	Si	C214
156	KBPC106*	600	3.0	50C	50		150S	Si	
157	KBPC106A	600	3.0	50C	50		150S	Si	C216a
158	RKBPC106	600	3.0	50	50		150S	Si	C216a
159	SB360#B	600	3.0	50A	50		175B	Si	C219m
160	KBL06	600	3.0	100A	200		150S	Si	C222a
161	BR38	800	3.0	40A	50		125A	Si	C219a
162	BR38F	800	3.0	40A	50		125A	Si	C219a
163	KBC308	800	3.0	45A	100	8.3m	150J	Si	M1284
164	RKBC308	800	3.0	45A	100	8.3m	150J	Si	M1284
165	3FB800R*	800	3.0	50	250	8.0m	150	Si△	C222c
166	423NB1AF1	800	3.0	50A	50		150A	Si	M1232
167	BR38G	800	3.0	50A	50		125A	Si	C219a
168	BRS306	800	3.0	50A	50	8.3m	125	Si	C219h
169	KBPC08	800	3.0	50C	50		150S	Si	C214
170	KBPC08A	800	3.0	50C	50		150S	Si	C214
171	KBPC108*	800	3.0	50C	50		150S	Si	
172	KBPC108A	800	3.0	50C	50		150S	Si	C216a
173	RKBPC108	800	3.0	50	50		150S	Si	C216a
174	SB380#B	800	3.0	50A	50		175B	Si	C219m
175	KBL08	800	3.0	100A	200		150S	Si	C222a
176	BR310	1.0k	3.0	40A	50		125A	Si	C219a
177	BR310F	1.0k	3.0	40A	50		125A	Si	C219a
178	KBC310	1.0k	3.0	45A	100	8.3m	150J	Si	M1284
179	RKBC310	1.0k	3.0	45A	100	8.3m	150J	Si	M1284
180	3FB1000R*	1.0k	3.0	50	250	8.0m	150	Si△	C222c
181	423EB2AF1	1.0k	3.0	50A	50		150A	Si	M1232
182	BR310G	1.0k	3.0	50A	50		125A	Si	C219a
183	KBPC10	1.0k	3.0	50C	50		150S	Si	C214
184	RKBPC110	1.0k	3.0	50	50		150S	Si	C216a
185	SB3100	1.0k	3.0	50A	50		175B	Si	C219m
186	KBL10	1.0k	3.0	100A	200		150S	Si	C222a
187	423NB2AF1	1.5k	3.0	50A	50		150A	Si	M1232
188♦	C1406B40C3700-2200	100	3.2	25	100	10m		Si	M1219b
189♦	C2206B40C3700-2200	100	3.2	25	100	10m		Si	M1219c

SYMBOLS AND CODES EXPLAINED IN INTERPRETER

8. STANDARD RECOVERY BRIDGE RECTIFIERS - Single Phase (Cont'd)

IN ORDER OF: (1) IO MAX (2) PIV (3) @ TEMP & (4) TYPE NUMBER

LINE No.	4 TYPE NUMBER	2 PIV (V)	MAX AVG FWD DC CURRENT 1 Io MAX (A)	3 @ TEMP (°C)	MAX RATING SURGE CURR PEAK 1 Cy (A)	PULSE WIDTH (s)	MAX. TEMP (°C)	MAT	DRAWING No.
1♦	C1412B80C3700-2200								
		190	3.2	25	100	10m		Si	M1219b
2	S5VB10	100	3.5	40A	200		150J	Si	C188b
3	SKB25-01*	100	3.5	45A	320	10m	150J	Si	M1066
4	S5VB20	200	3.5	40A	200		150J	Si	C188b
5	S5VB40	400	3.5	40A	200		150J	Si	C188b
6	S6A80FR	800	3.5	100C	9.0		150A	Si	M1240
7	S6A100FR	1.0k	3.5	100C	9.0		150A	Si	M1240
8	5B05	50	3.75	50J	200	10m	140	Si	M1123
9	F903-40G	50	4.0		75			Si	C188d
10	FWLC50	50	4.0		150	8.3m		Si	C222g
11	K760-0G	50	4.0		50			Si	C188e
12	KBU4A	50	4.0		200	8.3m	150J	Si	M1285
13	MDA970A1	50	4.0	25A	100		150J	Si	M1101
14	523FB1AI1	50	4.0	40A	125		150A	Si	M1017
15	523FC1AI1	50	4.0	40A	125		150A	Si	M1017
16	BRF401	50	4.0	50A	200	8.3m	125	Si	C222p
17	RS401	50	4.0	50C	250		125A	Si	C222
18	RS401G	50	4.0	50A	250		125A	Si	C222j
19	RS401L	50	4.0	50A	250		125A	Si	C222j
20	RS401LF	50	4.0	50A	250		125A	Si	M1030a
21	RS401LG	50	4.0	50A	250		125A	Si	M1030a
22▼	SB400	50	4.0	50A	200	16m	125	Si	M1060
23	SB601	50	4.0	50A	250		125A	Si	C219a
24▼	FBU4A	50	4.0	65A	200			Si	M1285
25	F903-41G	100	4.0		75			Si	C188d
26	FWLC100	100	4.0		150	8.3m		Si	C222g
27	K760-1G	100	4.0		50			Si	C188e
28	KBU4B	100	4.0		200	8.3m	150J	Si	M1285
29	523AB1AI1	100	4.0	40A	125		150A	Si	M1017
30	523AC1AI1	100	4.0	40A	125		150A	Si	M1017
31	B40C5000/3300	100	4.0	45A	250	10m	150	Si	C206
32▼	B40C5000/3300Si								
		100	4.0	45A	250	10m	150J	Si	C258a
33	E2506N*	100	4.0	45A	200	10m		Si	M1073c
34	BRF402	100	4.0	50A	200	8.3m	125	Si	C222p
35	KBL01	100	4.0	50A	200	8.3m	150J	Si	C222a
36	RS402	100	4.0	50C	250		125A	Si	C222
37	RS402F	100	4.0	50A	250		125A	Si	C222j
38	RS402G	100	4.0	50A	250		125A	Si	C222j
39	RS402L	100	4.0	50A	250		125A	Si	C222j
40	RS402LF	100	4.0	50A	250		125A	Si	M1030a
41	RS402LG	100	4.0	50A	250		125A	Si	M1030a
42▼	SB401	100	4.0	50A	200	16m	125	Si	M1060
43	SB602	100	4.0	50A	250		125A	Si	C219a
44▼	FBU4B	100	4.0	65A	200			Si	M1285
45	4B4B41	100	4.0	87C	150	10m	150J	Si	C219c
46▼	B80C5000/3300Si								
		190	4.0	45A	250	10m	150J	Si	C258a
47	E2512N*	190	4.0	45A	200	10m		Si	M1073c
48	F903-42G	200	4.0		75			Si	C188d
49	FWLC200	200	4.0		150	8.3m		Si	C222g
50	K760-2G	200	4.0		50			Si	C188e
51	KBU4D	200	4.0		200	8.3m	150J	Si	M1285
52	523BB1AI1	200	4.0	40A	125		150A	Si	M1017
53	523BC1AI1	200	4.0	40A	125		150A	Si	M1017
54	B80C5000/3300	200	4.0	45A	250	10m	150	Si	C206
55	BRF403	200	4.0	50A	200	8.3m	125	Si	C222p
56	RS403	200	4.0	50C	250		125A	Si	C222
57	RS403F	200	4.0	50A	250		125A	Si	C222j
58	RS403G	200	4.0	50A	250		125A	Si	C222j
59	RS403L	200	4.0	50A	250		125A	Si	C222j
60	RS403LF	200	4.0	50A	250		125A	Si	M1030a
61	RS403LG	200	4.0	50A	250		125A	Si	M1030a
62▼	SB402	200	4.0	50A	200	16m	125	Si	M1060
63	SB603	200	4.0	50A	250		175B	Si	C219n
64▼	FBU4D	200	4.0	65A	200			Si	M1285
65	4D4B41	200	4.0	87C	150	10m	150J	Si	C219c
66	F903-43G	300	4.0		75			Si	C188d
67	FWLC300	300	4.0		150	8.3m		Si	C222g
68	B125C5000/3300								
		300	4.0	45A	250	10m	150J	Si	C206
69▼	B125C5000/3300Si								
		300	4.0	45A	250	10m	150J	Si	S258a
70	E2620N*	300	4.0	45A	200	10m		Si	M1073c
71	F903-44G	400	4.0		75			Si	C188d
72	FWLC400	400	4.0		150			Si	C222g
73	K760-4G	400	4.0		50			Si	C188e
74	KBU4G	400	4.0		200	8.3m	150J	Si	M1285
75	523DB1AI1	400	4.0	40A	125		150A	Si	M1017
76	523DC1AI1	400	4.0	40A	125		150A	Si	M1017
77	BRF404	400	4.0	50A	200	8.3m	125	Si	C222p
78	RS404	400	4.0	50C	250		125A	Si	C222
79	RS404F	400	4.0	50A	250		125A	Si	C222j
80	RS404G	400	4.0	50A	250		125A	Si	C222j
81	RS404L	400	4.0	50A	250		125A	Si	C222j
82	RS404LF	400	4.0	50A	250		125A	Si	M1030a
83	RS404LG	400	4.0	50A	250		125A	Si	M1030a
84▼	SB404	400	4.0	50A	200	16m	125	Si	M1060
85	SB604	400	4.0	50A	250		175H	Si	C219n
86▼	FBU4G	400	4.0	65A	200			Si	M1285
87	4G4B41	400	4.0	87C	150	10m	150J	Si	C219c
88	F903-45G	500	4.0		75			Si	C188d
89	FWLC500	500	4.0		150			Si	C222g
90	F903-46G	600	4.0		75			Si	C188d
91	FWLC600	600	4.0		150			Si	C222g
92	K760-6G	600	4.0		50			Si	C188e
93	KBU4J	600	4.0		200	8.3m	150J	Si	M1285
94	523MB1AI1	600	4.0	40A	125		150A	Si	M1017
95	523MC1AI1	600	4.0	40A	125		150A	Si	M1017
96	B250C5000/3300								
		600	4.0	45A	250	10m	150	Si	C206
97▼	B250C5000/3300Si								
		600	4.0	45A	250	10m	150J	Si	C258a
98	E2640N*	600	4.0	45A	200	10m		Si	M1073c
99	BRF405	600	4.0	50A	200	8.3m	125	Si	C222p
100	RS405	600	4.0	50C	250		125A	Si	C222
101	RS405F	600	4.0	50A	250		125A	Si	C222j
102	RS405G	600	4.0	50A	250		125A	Si	C222j
103	RS405L	600	4.0	50A	250		125A	Si	C222j
104	RS405LF	600	4.0	50A	250		125A	Si	M1030a
105	RS405LG	600	4.0	50A	250		125A	Si	M1030a
106▼	SB406	600	4.0	50A	200	16m	125	Si	M1060
107	SB605#B	600	4.0	50A	250		175H	Si	C219n
108▼	FBU4J	600	4.0	65A	200			Si	M1285
109	4J4B41	600	4.0	87C	150	10m	150J	Si	C219c
110	FWLC700	700	4.0		150			Si	C222g
111	F903-48G	800	4.0		75			Si	C188d
112	FWLC800	800	4.0		150			Si	C222g
113	K760-8G	800	4.0		50			Si	C188e
114	KBU4K	800	4.0		200	8.3m	150J	Si	M1285
115	523NB1AI1	800	4.0	40A	125		150A	Si	M1017
116	523NC1AI1	800	4.0	40A	125		150A	Si	M1017
117	BRF406	800	4.0	50A	200	8.3m	125	Si	C222p
118	RS406	800	4.0	50C	250		125A	Si	C222
119	RS406F	800	4.0	50A	250		125A	Si	C222j
120	RS406G	800	4.0	50A	250		125A	Si	C222j
121	RS406L	800	4.0	50A	250		125A	Si	C222j
122	RS406LF	800	4.0	50A	250		125A	Si	M1030a
123	RS406LG	800	4.0	50A	250		125A	Si	M1030a
124▼	SB408	800	4.0	50A	200	16m	125	Si	M1060
125	SB606#B	800	4.0	50A	250		175H	Si	C219n
126▼	FBU4K	800	4.0	65A	200			Si	M1285
127	F903-410G	1.0k	4.0		75			Si	C188d
128	FWLC1000	1.0k	4.0		150			Si	C222g
129	K760-10G	1.0k	4.0		50			Si	C188e
130	KBU4M	1.0k	4.0		200	8.3m	150J	Si	M1285
131	RS407	1.0k	4.0	50C	250		125A	Si	C222
132	RS407F	1.0k	4.0	50A	250		125A	Si	C222j
133	RS407G	1.0k	4.0	50A	250		125A	Si	C222j
134	RS407L	1.0k	4.0	50A	250		125A	Si	C222j
135	RS407LF	1.0k	4.0	50A	250		125A	Si	M1030a
136	RS407LG	1.0k	4.0	50A	250		125A	Si	M1030a
137▼	SB410	1.0k	4.0	50A	200	16m	125	Si	M1060
138	SB607#B	1.0k	4.0	50A	250		175H	Si	C219n
139▼	FBU4M	1.0k	4.0	65A	200			Si	M1285
140	SCAJ05F*	50	4.5	55	25		150	Si	C216h
141	S15VB10	100	4.5	40A	200		150J	Si	C189
142	SCAJ1F*	100	4.5	55	25		150	Si	C216h
143	S15VB20	200	4.5	40A	200		150J	Si	C189
144	S15VB40	400	4.5	40A	200		150J	Si	C189
145♦	E2506B40C5000-3300								
		100	4.7	25	250	10m		Si	M1219c
146♦	E3806B40C5000-3300								
		100	4.7	25	250	10m		Si	M1219d
147♦	E2512B80C5000-3300								
		190	4.7	25	250	10m		Si	M1219c
148♦	E3812B80C5000-3300								
		190	4.7	25	250	10m		Si	M1219d
149♦	E2620B125C5000-3300								
		300	4.7	25	250	10m		Si	M1219c
150♦	E3820B125C5000-3300								
		300	4.7	25	250	10m		Si	M1219d
151♦	E2640B250C5000-3300								
		600	4.7	25	250	10m		Si	M1219c
152♦	E3840B250C5000-3300								
		600	4.7	25	250	10m		Si	M1219d
153	BY225-100	100	4.8	115A	100	20m	150J	Si	M1108†
154	BY225-200	200	4.8	115A	100	20m	150J	Si	M1108†
155	BY224-400	400	4.8	90A	100	20m	150J	Si	M1108†
156	BY224-600	600	4.8	90A	100	20m	150J	Si	M1108†
157	K595-0G	50	5.0		50			Si	M1289
158	SCAJ05FF	50	5.0		35		150	Si	C216h
159	KBC5005	50	5.0	45A	250	8.3m	150J	Si	M1284
160	RKBC5005	50	5.0	45A	250	8.3m	150J	Si	M1284
161▼	RS501	50	5.0	50	200	8.3m	125	Si	M1284
162♦	SDA138A	50	5.0	55C	100	8.3m	125C	Si	C216j
163	VH048X*	50	5.0	60C	65	8.3m	135J	Si	C216d
164	SB501	50	5.0	400A	250	8.0m	150S	Si	M970c
165	K595-1G	100	5.0		50			Si	M1289
166	M4B52	100	5.0	25A	150	10m	150J	Si	C260
167	KBC501	100	5.0	45A	250	8.3m	150J	Si	M1284
168	RKBC501	100	5.0	45A	250	8.3m	150J	Si	M1284
169▼	RS502	100	5.0	50	200	8.3m	125	Si	M1284
170	S6A10FR*	100	5.0	55C	25		150	Si	M1034b
171	SCAJ10FF	100	5.0	55A	35		175J	Si	C216h
172♦	SDA138B	100	5.0	55C	100	8.3m	125C	Si	C216j
173	VH148X*	100	5.0	60C	65	8.3m	135J	Si	C216d
174	SB502	100	5.0	400A	250	8.0m	150S	Si	M970c
175	SCAJ15FF	150	5.0	55C	35		175J	Si	C216h
176	K595-2G	200	5.0		50			Si	M1289
177	M4C52	200	5.0	25A	150	10m	150J	Si	C260
178	SGF-2	200	5.0	40	50	10m	130S	Si	M1095
179	KBC502	200	5.0	45A	250	8.3m	150J	Si	M1284
180	RKBC502	200	5.0	45A	250	8.3m	150J	Si	M1284
181	SKB15-02A2*	200	5.0	45A	320	10m	150J	Si	M1065
182▼	RS503	200	5.0	50	200	8.3m	125	Si	M1284
183	S6A20FR*	200	5.0	55C	25		150	Si	M1034b
184♦	SDA138C	200	5.0	55C	100	8.3m	125C	Si	C216j
185	VH248X*	200	5.0	60C	65	8.3m	135J	Si	C216d
186	SB503	200	5.0	400A	250	8.0m	150S	Si	M970c
187	K595-3G	300	5.0		50			Si	M1289
188	K595-4G	400	5.0		50			Si	M1289
189	M4E52	400	5.0	25A	150	10m	150J	Si	C260
190	SGF-4	400	5.0	40	50	10m	130S	Si	M1095
191	KBC504	400	5.0	45A	250	8.3m	150J	Si	M1284
192	RKBC504	400	5.0	45A	250	8.3m	150J	Si	M1284
193	SKBB80-70-4*	400	5.0	45A	150	10m	150J	Si	M1065
194	PE40†	400	5.0	50	100	8.3m		Si	C222c
195▼	RS504	400	5.0	50	200	8.3m	125	Si	M1284
196	S6A40FR*	400	5.0	55C	25		150	Si	M1034b
197♦	SDA138D	400	5.0	55C	100	8.3m	125	Si	C216j
198	VH448X*	400	5.0	60C	65	8.3m	135J	Si	C216d
199	SB504	400	5.0	400A	250	8.0m	150S	Si	M970c
200	K595-5G	500	5.0		50			Si	M1289
201	SGF-5	500	5.0	40	50	10m	130S	Si	M1095
202	K595-6G	600	5.0		50			Si	M1289
203	KBC506	600	5.0	45A	250	8.3m	150J	Si	M1284
204	RKBC506	600	5.0	45A	250	8.3m	150J	Si	M1284
205▼	RS505	600	5.0	50	200	8.3m	125	Si	M1284

SYMBOLS AND CODES EXPLAINED IN INTERPRETER

8. STANDARD RECOVERY BRIDGE RECTIFIERS - Single Phase (Cont'd)

IN ORDER OF: (1) IO MAX (2) PIV (3) @ TEMP & (4) TYPE NUMBER

LINE No.	4 TYPE NUMBER	2 PIV (V)	MAX AVG FWD DC CURRENT 1 Io MAX (A)	3 @ TEMP (°C)	MAX RATING SURGE CURR PEAK 1 Cy (A)	PULSE WIDTH (s)	MAX. TEMP (°C)	MAT	DRAWING No.
1	S6A60FR*	600	5.0	55C	25		150	Si	M1034b
2♦	SDA138E	600	5.0	55C	100	8.3m	125	Si	C216j
3	VH648X*	600	5.0	60C	65	8.3m	135J	Si	C216d
4	SB505	600	5.0	400A	250	8.0m	150S	Si	M970c
5	K595-7G	700	5.0		50			Si	M1289
6	K595-8G	800	5.0		50			Si	M1289
7	KBC508	800	5.0	45A	250	8.3m	150J	Si	M1284
8	RKBC508	800	5.0	45A	250	8.3m	150J	Si	M1284
9	SKBB250-220-4	800	5.0	45A	180	10m	150J	Si	M1065
10▼	RS506	800	5.0	50	200	8.3m	125	Si	M1284
11♦	SDA138F	800	5.0	55C	100	8.3m	125	Si	C216j
12	SB506	800	5.0	400A	250	8.0m	150S	Si	M970c
13	KBC510	1.0k	5.0	45A	250	8.3m	150J	Si	M1284
14	RKBC510	1.0k	5.0	45A	250	8.3m	150J	Si	M1284
15▼	RS507	1.0k	5.0	50	200	8.3m	125	Si	M1284
16♦	SDA138G	1.0k	5.0	55C	100	8.3m	125	Si	C216j
17	SKBB500-445-4	1.2k	5.0	45A	180	10m	150J	Si	M1065
18	SKBaB500-445-4								
		1.3k	5.0	45A	165	8.3m	150J	Si	M1065
19	SL63100	1.0k	5.5	100C	15		150A	Si	M1243
20	SB607	1.0	6.0	40A	250	8.0m	150S	Si	C219
21	BR605	50	6.0	40A	250	8.0m	150S	Si	C219a
22	BR605F	50	6.0	40A	250		125A	Si	C219a
23	BR605G	50	6.0	40A	250		125A	Si	C219a
24▼	PB605	50	6.0	40	200	8.3m	125	Si	C219a
25	PW-005	50	6.0	45C	200	10m	150C	Si	C188c
26	6FB050*	50	6.0	50	300	8.0m	150	Si	C222c
27	6SB050*	50	6.0	50	300	8.0m	150	Si△	C216d
28	6SB50	50	6.0	50	300	8.3m	150	Si	C216d
29	523FB1AF1	50	6.0	50A	125		150A	Si	M1232
30	BRS601	50	6.0	50A	125	8.3m	125	Si	C219a†
31	CTN605	50	6.0	50A	250		125A	Si	M1257
32	CTP605	50	6.0	50A	250		125A	Si	M1257
33▼	DB600T	50	6.0	50A	125	16m	125	Si	M1341
34▼	DB600W	50	6.0	50A	125	16m	125	Si	C219a
35	FWLD50	50	6.0	50A	300		150	Si	C222g
36▼	MP605	50	6.0	50	200	8.3m	125	Si	C188e
37▼	MP605G	50	6.0	50C	200	8.3m	150	Si	C188e
38▼	RS601	50	6.0	50	200	8.3m	125	Si	M1350
39	dc600.5	50	6.0	80C	100		150A	Si	M1196
40	VH048*	50	6.0	80C	100	8.3m	150J	Si	C216d
41	KBU6A	50	6.0	100C	250	8.3m	150J	Si	M1285
42	SBR6A1	100	6.0		300			Si	C189c
43	6B4B41	100	6	30A	200	10m	150J	Si	C216l
44	BR61	100	6.0	40A	250	8.0m	150S	Si	C219a
45	BR61F	100	6.0	40A	250		125A	Si	C219a
46	BR61G	100	6.0	40A	250		125A	Si	C219a
47▼	PB61	100	6.0	40	200	8.3m	125	Si	C219a
48	S25VB10	100	6.0	40A	400		150J	Si	C189a
49	PW-01	100	6.0	45C	200	10m	150C	Si	C188c
50	6FB100*	100	6.0	50	300	8.0m	150	Si	C222c
51	6SB100	100	6.0	50	300	8.3m	150	Si	C216d
52	523AB1AF1	100	6.0	50A	125		150A	Si	M1232
53	BRS602	100	6.0	50A	125	8.3m	125	Si	C219a†
54	CTN61	100	6.0	50A	250		125A	Si	M1257
55	CTP61	100	6.0	50A	250		125A	Si	M1257
56▼	DB601T	100	6.0	50A	125	16m	125	Si	M1341
57▼	DB601W	100	6.0	50A	125	16m	125	Si	C219a
58	FWLD100	100	6.0	50A	300		150	Si	C222g
59	KBPC601	100	6.0	50A	125	8.3m	125J	Si	C219a†
60▼	MP61	100	6.0	50	200	8.3m	125	Si	C188e
61▼	MP61G	100	6.0	50C	200	8.3m	150	Si	C188e
62▼	RS602	100	6.0	50	200	8.3m	125	Si	M1350
63	dc601	100	6.0	80C	100		150A	Si	M1196
64	VH148*	100	6.0	80C	100	8.3m	150J	Si	C216d
65	KBU6B	100	6.0	100C	250	8.3m	150J	Si	M1285
66	SBR6A2	200	6.0		300			Si	C189c
67	6SBF20	200	6.0	25	100	8.3m	150	Si	C216d
68	6D4B41	200	6	30A	200	10m	150J	Si	C216l
69	6B20	200	6.0	37A	250	10m	140J	Si	M1255
70	BR62	200	6.0	40A	250	8.0m	150S	Si	C219a
71	BR62F	200	6.0	40A	250		125A	Si	C219a
72	BR62G	200	6.0	40A	250		125A	Si	C219a
73▼	PB62	200	6.0	40	200	8.3m	125	Si	C219a
74	S25VB20	200	6.0	40A	400		150J	Si	C189a
75	PW-02	200	6.0	45C	200	10m	150C	Si	C188c
76	6FB200*	200	6.0	50	300	8.0m	150	Si	C222c
77	6SB200	200	6.0	50	300	8.3m	150	Si	C216d
78	523BB1AF1	200	6.0	50A	125		150A	Si	M1232
79	BRS603	200	6.0	50A	125	8.3m	125	Si	C219a†
80	CTN62	200	6.0	50A	250		125A	Si	M1257
81	CTP62	200	6.0	50A	250		125A	Si	M1257
82▼	DB602T	200	6.0	50A	125	16m	125	Si	M1341
83▼	DB602W	200	6.0	50A	125	16m	125	Si	C219a
84	FWLD200	200	6.0	50A	300		150	Si	C222g
85▼	MP62	200	6.0	50	200	8.3m	125	Si	C188e
86▼	MP62G	200	6.0	50C	200	8.3m	150	Si	C188e
87▼	RS603	200	6.0	50	200	8.3m	125	Si	M1350
88	S6A20*	200	6.0	55C	50		150	Si	M1034b
89	dc602	200	6.0	80C	100		150A	Si	M1196
90	VH247*	200	6.0	80C	100	8.3m	150J	Si	C216d
91	VH248*	200	6.0	80C	100	8.3m	150J	Si	C216d
92	KBU6D	200	6.0	100C	250	8.3m	150J	Si	M1285
93	M4C6	200	6.0	100C	120	10m	135J	Si△	C261
94	SBR6A3	300	6.0		300			Si	C189c
95	FWLD300	300	6.0	50A	300		150	Si	C222g
96	6SBF40	400	6.0	25	100	8.3m	150	Si	C216d
97	6G4B41	400	6	30A	200	10m	150J	Si	C216l
98	6B40	400	6.0	37A	250	10m	140J	Si	M1255
99	BR64	400	6.0	40A	250	8.0m	150S	Si	C219a
100	BR64F	400	6.0	40A	250		125A	Si	C219a
101	BR64G	400	6.0	40A	250		125A	Si	C219a
102▼	PB64	400	6.0	40	200	8.3m	125	Si	C219a
103	S25VB40	400	6.0	40A	400		150J	Si	C189a
104	PW-04	400	6.0	45C	200	10m	150C	Si	C188c
105	6FB400*	400	6.0	50	300	8.0m	150	Si	C222c
106	6SB400	400	6.0	50	300	8.3m	150	Si	C216d
107	523DB1AF1	400	6.0	50A	125		150A	Si	M1232
108	BRS604	400	6.0	50A	125	8.3m	125	Si	C219a†
109	CTN64	400	6.0	50A	250		125A	Si	M1257
110	CTP64	400	6.0	50A	250		125A	Si	M1257
111▼	DB604T	400	6.0	50A	125	16m	125	Si	M1341
112▼	DB604W	400	6.0	50A	125	16m	125	Si	C219a
113	FWLD400	400	6.0	50A	300		150	Si	C222g
114▼	MP64	400	6.0	50	200	8.3m	125	Si	C188e
115▼	MP64G	400	6.0	50C	200	8.3m	150	Si	C188e
116▼	RS604	400	6.0	50	200	8.3m	125	Si	M1350
117	S6A40*	400	6.0	55C	50		150	Si	M1034b
118	dc604	400	6.0	80C	100		150A	Si	M1196
119	VH447*	400	6.0	80C	100	8.3m	150J	Si	C216d
120	VH448*	400	6.0	80C	100	8.3m	150J	Si	C216d
121	KBU6G	400	6.0	100C	250	8.3m	150J	Si	M1285
122	M4E6	400	6.0	100C	120	10m	135J	Si△	C261
123	FWLD500	500	6.0	50A	300		150	Si	C222g
124	SBR6A05	500	6.0	50A	300		150	Si	C189c
125	6SBF60	600	6.0	25	100	8.3m	150	Si	C216d
126	6B60	600	6.0	37A	250	10m	140J	Si	M1255
127	BR66	600	6.0	40A	250	8.0m	150S	Si	C219a
128	BR66F	600	6.0	40A	250		125A	Si	C219a
129	BR66G	600	6.0	40A	250		125A	Si	C219a
130▼	PB66	600	6.0	40	200	8.3m	125	Si	C219a
131	SB605	600	6.0	40A	250	8.0m	150S	Si	C219
132	PW-06	600	6.0	45C	200		150C	Si	C188c
133	6FB600*	600	6.0	50	300	8.0m	150	Si	C222c
134	6SB600	600	6.0	50	300	8.3m	150	Si	C216d
135	523MB1AF1	600	6.0	50A	125		150A	Si	M1232
136	BRS605	600	6.0	50A	125	8.3m	125	Si	C219a†
137	CTN66	600	6.0	50A	250		125A	Si	M1257
138	CTP66	600	6.0	50A	250		125A	Si	M1257
139▼	DB606T	600	6.0	50A	125	16m	125	Si	M1341
140▼	DB606W	600	6.0	50A	125	16m	125	Si	C219a
141	FWLD600	600	6.0	50A	300		150	Si	C222g
142▼	MP66	600	6.0	50	200	8.3m	125	Si	C188e
143▼	MP66G	600	6.0	50C	200	8.3m	150	Si	C188e
144▼	RS605	600	6.0	50	200	8.3m	125	Si	M1350
145	S6A60*	600	6.0	55C	50		150	Si	M1034b
146	dc606	600	6.0	80C	100		150A	Si	M1196
147	VH647*	600	6.0	80C	100	8.3m	150J	Si	C216d
148	VH648*	600	6.0	80C	100	8.3m	150J	Si	C216d
149	KBU6J	600	6.0	100C	250	8.3m	150J	Si	M1285
150	M4G6	600	6.0	100C	120	10m	135J	Si△	C261
151	6J4B41	600	6.0	104C	200	10m	150J	Si	C216l
152	FWLD700	700	6.0	50A	300		150	Si	C222g
153	6SBF80	800	6.0	25	100	8.3m	150	Si	C216d
154	BR68	800	6.0	40A	250	8.0m	150S	Si	C219a
155	BR68F	800	6.0	40A	250		125A	Si	C219a
156	BR68G	800	6.0	40A	250		125A	Si	C219a
157▼	PB68	800	6.0	40	200	8.3m	125	Si	C219a
158	SB606	800	6.0	40A	250	8.0m	150S	Si	C219
159	PW08*	800	6.0	45A	200			Si	C216
160	6FB800*	800	6.0	50	300	8.0m	150	Si	C222c
161	6SB800	800	6.0	50	300	8.3m	150	Si	C216d
162	523NB1AF1	800	6.0	50A	125		150A	Si	M1232
163	BRS606	800	6.0	50A	125	8.3m	125	Si	C219a†
164	CTN68	800	6.0	50A	250		125A	Si	M1257
165	CTP68	800	6.0	50A	250		125A	Si	M1257
166▼	DB608T	800	6.0	50A	125	16m	125	Si	M1341
167▼	DB608W	800	6.0	50A	125	16m	125	Si	C219a
168	FWLD800	800	6.0	50A	300		150	Si	C222g
169▼	MP68	800	6.0	50	200	8.3m	125	Si	C188e
170▼	MP68G	800	6.0	50C	200	8.3m	150	Si	C188e
171▼	RS606	800	6.0	50	200	8.3m	125	Si	M1350
172	S6A80*	800	6.0	55C	50		150	Si	M1034b
173	dc608	800	6.0	80C	100		150A	Si	M1196
174	VH847*	800	6.0	80C	100	8.3m	150J	Si	C216d
175	VH848*	800	6.0	80C	100	8.3m	150J	Si	C216d
176	KBU6K	800	6.0	100C	250	8.3m	150J	Si	M1285
177	6SBF100	1.0k	6.0	25	100	8.3m	150	Si	C216d
178	BR610	1.0k	6.0	40A	250	8.0m	150S	Si	C219a
179	BR610F	1.0k	6.0	40A	250		125A	Si	C219a
180	BR610G	1.0k	6.0	40A	250		125A	Si	C219a
181▼	PB610	1.0k	6.0	40	200	8.3m	125	Si	C219a
182	6FB1000*	1.0k	6.0	50	300	8.0m	150	Si	C222c
183	6SB1000	1.0k	6.0	50	300	8.3m	150	Si	C216d
184	CTN610	1.0k	6.0	50A	250		125A	Si	M1257
185	CTP610	1.0k	6.0	50A	250		125A	Si	M1257
186▼	DB610T	1.0k	6.0	50A	125	16m	125	Si	M1341
187▼	DB610W	1.0k	6.0	50A	125	16m	125	Si	C219a
188	FWLD1000	1.0k	6.0	50A	300		150	Si	C222g
189▼	MP610	1.0k	6.0	50	200	8.3m	125	Si	C188e
190▼	MP610G	1.0k	6.0	50C	200	8.3m	150	Si	C188e
191▼	RS607	1.0k	6.0	50	200	8.3m	125	Si	M1350
192	S6A100*	1.0k	6.0	55C	50		150	Si	M1034b
193	VH1048*	1.0k	6.0	80C	100	8.3m	150J	Si	C216d
194	KBU6M	1.0k	6.0	100C	250	8.3m	150J	Si	M1285
195	SKB30-01S1	100	6.5	45A	370	10m	150J	Si	M1067
196	SKB30-02A1*	200	6.5	45A	320	10m	150J	Si	M1067
197	SKB30-02S1	200	6.5	45A	370	10m	150J	Si	M1067
198	SKB30-04S1	400	6.5	45A	370	10m	150J	Si	M1067
199	SKB30-06S1	600	6.5	45A	370	10m	150J	Si	M1067
200	SKB30-08S1	800	6.5	45A	370	10m	150J	Si	M1067
201	SGA2C	200	7.0	25				Si	M1093
202	SGA-2	200	7.0	40	50	10m	130S	Si	M1093
203	SGA3C	400	7.0	25				Si	M1093
204	SGA-4	400	7.0	40	50	10m	130S	Si	M1093
205	SGA5C	500	7.0	25				Si	M1093
206	SGA-5	500	7.0	40	50	10m	130S	Si	M1093
207	BR805	50	8.0	40A	250	8.0m	150S	Si	C219
208	BR805F	50	8.0	50A	250		125A	Si	C219
209	BR805G	50	8.0	50A	250		125A	Si	C219
210▼	DB800T	50	8.0	50A	125	16m	125	Si	M1341
211▼	DB800W	50	8.0	50A	125	16m	125	Si	C219a
212	KBPC6005	50	8.0	50C	125		150S	Si	C216a
213	KBPC8005	50	8.0	50C	125		150S	Si	C216
214	KBPC8005T	50	8.0	50C	125		150S	Si	C214
215	RKBPC6005	50	8.0	50	125		150S	Si	C219a
216	RKBPC8005	50	8.0	50	125		150S	Si	C219
217	MB805	50	8.0	75H	25		150	Si	C219j
218	MB805G	50	8.0	75H	125		175	Si	C219j
219▼	MP805	50	8.0	75	200	8.3m	125	Si	C188e

SYMBOLS AND CODES EXPLAINED IN INTERPRETER

8. STANDARD RECOVERY BRIDGE RECTIFIERS - Single Phase (Cont'd)

IN ORDER OF: (1) IO MAX (2) PIV (3) @ TEMP & (4) TYPE NUMBER

LINE No.	4 TYPE NUMBER	2 PIV (V)	MAX AVG FWD DC CURRENT 1 Io MAX (A)	3 @ TEMP (°C)	MAX RATING SURGE CURR PEAK 1 Cy (A)	PULSE WIDTH (s)	MAX. TEMP (°C)	MAT	DRAWING No.
1▼	MP805G	50	8.0	75C	200	8.3m	150	Si	C188e
2	8SB050	50	8.0	80	300	8.3m	150	Si	C216d
3	KBU8A	50	8.0	100C	300	8.3m	150J	Si	M1285
4	BR81	100	8.0	40A	250	8.0m	150S	Si	C219
5	BR81F	100	8.0	50A	250		125A	Si	C219
6	BR81G	100	8.0	50A	250		125A	Si	C219
7▼	DB801T	100	8.0	50A	125	16m	125	Si	M1341
8▼	DB801W	100	8.0	50A	125	16m	125	Si	C219a
9	KBPC801	100	8.0	50C	125	8.3m	125J	Si	C219a†
10	MDA970A2	100	8.0	55C	100		150J	Si△	M1101
11	MB81	100	8.0	75A	25		150	Si	C219j
12	MB81G	100	8.0	75A	125		175	Si	C219j
13▼	MP81	100	8.0	75	200	8.3m	125	Si	C188e
14▼	MP81G	100	8.0	75C	200	8.3m	150	Si	C188e
15	8SB100	100	8.0	80	300	8.3m	150	Si	C216d
16	KBU8B	100	8.0	100C	300	8.3m	150J	Si	M1285
17	BR82	200	8.0	40A	250	8.0m	150S	Si	C219
18	BR82F	200	8.0	50A	250		125A	Si	C219
19	BR82G	200	8.0	50A	250		125A	Si	C219
20▼	DB802T	200	8.0	50A	125	16m	125	Si	M1341
21▼	DB802W	200	8.0	50A	125	16m	125	Si	C219a
22	KBPC602	200	8.0	50C	125		150S	Si	C216a
23	KBPC802	200	8.0	50C	125		150S	Si	C216
24	KBPC802T	200	8.0	50C	125		150S	Si	C214
25	RKBPC602	200	8.0	50	125		150S	Si	C219a
26	RKBPC802	200	8.0	50	125		150S	Si	C219
27	MDA970A3	200	8.0	55C	100		150J	Si△	M1101
28	MB82	200	8.0	75A	25		150	Si	C219j
29	MB82G	200	8.0	75A	125		175	Si	C219j
30▼	MP82	200	8.0	75	200	8.3m	125	Si	C188e
31▼	MP82G	200	8.0	75C	200	8.3m	150	Si	C188e
32	8SB200	200	8.0	80	300	8.3m	150	Si	C216d
33	KBU8D	200	8.0	100C	300	8.3m	150J	Si	M1285
34	BR84	400	8.0	40A	250	8.0m	150S	Si	C219
35	BR84F	400	8.0	50A	250		125A	Si	C219
36	BR84G	400	8.0	50A	250		125A	Si	C219
37▼	DB804T	400	8.0	50A	125	16m	125	Si	M1341
38▼	DB804W	400	8.0	50A	125	16m	125	Si	C219a
39	KBPC604	400	8.0	50C	125		150S	Si	C216a
40	KBPC804	400	8.0	50C	125		150S	Si	C216
41	KBPC804T	400	8.0	50C	125		150S	Si	C214
42	RKBPC804	400	8.0	50	125		150S	Si	C219
43	MDA970A5	400	8.0	55C	100		150J	Si△	M1101
44	MB84	400	8.0	75A	25		150	Si	C219j
45	MB84G	400	8.0	75A	125		175	Si	C219j
46▼	MP84	400	8.0	75	200	8.3m	125	Si	C188e
47▼	MP84G	400	8.0	75C	200	8.3m	150	Si	C188e
48	8SB400	400	8.0	80	300	8.3m	150	Si	C216d
49	KBU8G	400	8.0	100C	300	8.3m	150J	Si	M1285
50	BR86	600	8.0	40A	250	8.0m	150S	Si	C219
51	BR86F	600	8.0	50A	250		125A	Si	C219
52	BR86G	600	8.0	50A	250		125A	Si	C219
53▼	DB806T	600	8.0	50A	125	16m	125	Si	M1341
54▼	DB806W	600	8.0	50A	125	16m	125	Si	C219a
55	KBPC606	600	8.0	50C	125		150S	Si	C216a
56	KBPC806	600	8.0	50C	125		150S	Si	C216
57	KBPC806T	600	8.0	50C	125		150S	Si	C214
58	RKBPC606	600	8.0	50	125		150S	Si	C219a
59	RKBPC806	600	8.0	50	125		150S	Si	C219
60	MDA970A6	600	8.0	55C	100		150J	Si△	M1101
61	MB86	600	8.0	75A	25		150	Si	C219j
62	MB86G	600	8.0	75A	125		175	Si	C219j
63▼	MP86	600	8.0	75	200	8.3m	125	Si	C188e
64▼	MP86G	600	8.0	75C	200	8.3m	150	Si	C188e
65	8SB600	600	8.0	80	300	8.3m	150	Si	C216d
66	KBU8J	600	8.0	100C	300	8.3m	150J	Si	M1285
67	BR88	800	8.0	40A	250	8.0m	150S	Si	C219
68	BR88F	800	8.0	50A	250		125A	Si	C219
69	BR88G	800	8.0	50A	250		125A	Si	C219
70▼	DB808T	800	8.0	50A	125	16m	125	Si	M1341
71▼	DB808W	800	8.0	50A	125	16m	125	Si	C219a
72	KBPC608	800	8.0	50C	125		150S	Si	C216a
73	KBPC808	800	8.0	50C	125		150S	Si	C216
74	KBPC808T	800	8.0	50C	125		150S	Si	C214
75	RKBPC608	800	8.0	50	125		150S	Si	C219a
76	RKBPC808	800	8.0	50	125		150S	Si	C219
77	MB88	800	8.0	75A	25		150	Si	C219j
78	MB88G	800	8.0	75A	125		175	Si	C219j
79▼	MP88	800	8.0	75	200	8.3m	125	Si	C188e
80▼	MP88G	800	8.0	75C	200	8.3m	150	Si	C188e
81	KBU8K	800	8.0	100C	300	8.3m	150J	Si	M1285
82	BR810	1.0k	8.0	40A	250	8.0m	150S	Si	C219
83	BR810F	1.0k	8.0	50A	250		125A	Si	C219
84	BR810G	1.0k	8.0	50A	250		125A	Si	C219
85▼	DB810T	1.0k	8.0	50A	125	16m	125	Si	M1341
86▼	DB810W	1.0k	8.0	50A	125	16m	125	Si	C219a
87	KBPC610	1.0k	8.0	50C	125		150S	Si	C216a
88	KBPC810	1.0k	8.0	50C	125		150S	Si	C216
89	KBPC810T	1.0k	8.0	50C	125		150S	Si	C214
90	RKBPC610	1.0k	8.0	50	125		150S	Si	C219a
91	RKBPC810	1.0k	8.0	50	125		150S	Si	C219
92▼	MP810	1.0k	8.0	75	200	8.3	125	Si	C188e
93▼	MP810G	1.0k	8.0	75C	200	8.3m	150	Si	C188e
94	KBU8M	1.0k	8.0	100C	300	8.3m	150J	Si	M1285
95	SCAJ2F*	200	9.0	55	25		150	Si	C216h
96	HRSCAJ4F	400	9.0		25		150	Si	C216h
97	SCAJ4F*	400	9	55	25		150	Si	C216h
98	K850-0	50	10		300			Si	C188f
99▼	SRM10F	50	10					Si	
100	TJ118-0	50	10		300			Si	C224j
101▼	PK05	50	10	25A	150	8.3m	150	Si	M1358
102	BR1005	50	10.0	40A	250	8.0m	150S	Si	C219
103	J005*	50	10	45A	200			Si	C218b
104	10HB05*	50	10	50C	300	60	150	Si	C214a
105	BR1005F	50	10	50A	250		125A	Si	C219
106	BR1005G	50	10	50A	250		125A	Si	C219
107▼	MP1005	50	10	50	200	8.3	125	Si	C188e
108	SBR10A05	50	10	50A	300		150	Si	C189c
109	BRS10-005	50	10	55C	200	8.3m	125A	Si	C189c
110	KBPC10-005*	50	10	55C	200		175S	Si	C224b
111	S10A05FR*	50	10	55C	100		150	Si	M1034a
112	SCBH05F*	50	10	55	80		150	Si	C216h
113	SDA165A	50	10	55C	150		125	Si	C216c
114	SDA267A	50	10	55C	125		150C	Si	C216h
115♦	SDA304A	50	10	55C	125	8.3m	150	Si	C218e
116	VJ048X*	50	10	60C	75	8.3m	150J	Si	C216d
117	100JB05L	50	10	65C	130		150A	Si	C218c
118	MB1005	50	10	75H	150		150	Si	C219j
119	MB1005G	50	10	75H	150		175	Si	C219j
120▼	MP1005G	50	10	75C	200	8.3m	150	Si	C188e
121	10SB050	50	10	80	300	8.3m	150	Si	C216d
122	10TB050	50	10	80	400	8.3m	150	Si	C230a
123	dc10.5	50	10.0	80C	125		150A	Si	M1196
124	VJ048*	50	10	80C	100	8.3m	150J	Si	C216d
125	SL1505HE	50	10	100C	65		150A	Si	M1243
126	K850-1	100	10		300			Si	C188f
127▼	SRM10A	100	10					Si	
128	TJ118-1	100	10		300			Si	C224j
129♦	PK10	100	10	25A	150	8.3m	150	Si	
130	10B4B41	100	10	30A	200	10m	150J	Si	C216l
131	BR101	100	10.0	40A	250	8.0m	150S	Si	C219
132	PB111	100	10	40A	150	10m	150J	Si	C219g
133	J01*	100	10	45A	200			Si	C218b
134	10HB10*	100	10	50C	300	60	150	Si	C214a
135	BR101F	100	10	50A	250		125A	Si	C219
136	BR101G	100	10	50A	250		125A	Si	C219
137▼	MP101	100	10	50	200	8.3	125	Si	C188e
138	SBR10A1	100	10	50A	300		150	Si	C189c
139	680-1	100	10	55C	50	8.3m	150	Si	C224f
140	BRS10-01	100	10	55C	200	8.3m	125A	Si	C189c
141	KBPC10-01	100	10	55C	200	8.3m	125J	Si	C219a†
142	S10A10FR*	100	10	55C	100		150	Si	M1034a
143	SCBH1F*	100	10	55	80		150	Si	C216h
144	SDA165B	100	10	55C	150		125	Si	C216c
145	SDA267B	100	10	55C	125		150C	Si	C216h
146♦	SDA304B	100	10	55C	125	8.3m	150	Si	C218e
147	VJ148X*	100	10	60C	75	8.3m	150J	Si	C216d
148	100JB1L	100	10	65C	130		150A	Si	C218c
149	MB101	100	10	75A	150		150	Si	C219j
150	MB101G	100	10	75A	150		175	Si	C219j
151▼	MP101G	100	10	75C	200	8.3m	150	Si	C188e
152	10SB100	100	10	80	300	8.3m	150	Si	C216d
153	10TB100	100	10	80	400	8.3m	150	Si	C230a
154	dc101	100	10.0	80C	125		150A	Si	M1196
155	VJ148*	100	10	80C	100	8.3m	150J	Si	C216d
156	FB1001	100	10	90C	200	10m	150	Si	C189b
157	FB1001L	100	10	90C	200	10m	150J	Si	C216f
158	SL1510HE	100	10	100C	65		150A	Si	M1243
159	PM7A2	150	10	80C	150	10m	150A	Si	M1201
160	SL1515HE	150	10	100C	65		150A	Si	M1243
161	K850-2	200	10		300			Si	C188f
162▼	SRM10B	200	10					Si	
163	TJ118-2	200	10		300			Si	C224j
164♦	PK20	200	10	25A	150	8.3m	150	Si	
165	10D4B41	200	10	30A	200	10m	150J	Si	C216l
166	BR102	200	10.0	40A	250	8.0m	150S	Si	C219
167	PB112	200	10	40A	150	10m	150J	Si	C219g
168	SCA114W	200	10	40A	400	10m	70A	Si△	M1325
169	J02*	200	10	45A	200			Si	C218b
170	SKB25-02*	200	10	45A	320	10m	150J	Si	M1066
171	SKB50-02A3*	200	10	45A	600	10m	150J	Si	M1068
172	10HB20*	200	10	50C	300	60	150	Si	C214a
173	BR102F	200	10	50A	250		125A	Si	C219
174	BR102G	200	10	50A	250		125A	Si	C219
175▼	MP102	200	10	50	200	8.3	125	Si	C188e
176	SBR10A2	200	10	50A	300		150	Si	C189c
177	680-2	200	10	55C	50	8.3m	150	Si	C224f
178	BRS10-02	200	10	55C	200	8.3m	125A	Si	C189c
179	KBPC10-02*	200	10	55C	200		175S	Si	C224b
180♦	M19500/469-01	200	10	55C	100 §	8.3m	175J	Si	C267
181	S10A20FR*	200	10	55C	100		150	Si	M1034a
182	SDA165C	200	10	55C	150		125	Si	C216c
183	SDA267C	200	10	55C	125		150C	Si	C216h
184♦	SDA304C	200	10	55C	125	8.3m	150	Si	C218e
185	VJ248X*	200	10	60C	75	8.3m	150J	Si	C216d
186	100JB2L	200	10	65C	130		150A	Si	C218c
187	MB102	200	10	75A	150		150	Si	C219j
188	MB102G	200	10	75A	150		175	Si	C219j
189▼	MP102G	200	10	75C	200	8.3m	150	Si	C188e
190	10SB200	200	10	80	300	8.3m	150	Si	C216d
191	10TB200	200	10	80	400	8.3m	150	Si	C230a
192	dc102	200	10.0	80C	125		150A	Si	M1196
193	VJ247*	200	10	80C	100	8.3m	150J	Si	C216d
194	VJ248*	200	10	80C	100	8.3m	150J	Si	C216d
195	FB1002	200	10	90C	200	10m	150	Si	C189b
196	FB1002L	200	10	90C	200	10m	150J	Si	C216f
197	1N4436*	200	10	100C	100	8.3m	160J	Si	M463h
198	K850-3	300	10		300			Si	C188f
199	TJ118-3	300	10		300			Si	C224j
200	SBR10A3	300	10	50A	300		150	Si	C189c
201	680-3	300	10	55C	50	8.3m	150	Si	C224f
202	PM7A4	300	10	80C	150	10m	150A	Si	M1201
203	K850-4	400	10		300			Si	C188f
204▼	SRM10D	400	10					Si	
205	TJ118-4	400	10		300			Si	C224j
206♦	PK40	400	10	25A	150	8.3m	150	Si	
207	10G4B41	400	10	30A	200	10m	150J	Si	C216l
208	BR104	400	10.0	40A	250	8.0m	150S	Si	C219
209	PB114	400	10	40A	150	10m	150J	Si	C219g
210	SEA114W	400	10	40A	400	10m	70A	Si△	M1325
211	J04*	400	10	45A	200			Si	C218b
212	10HB40*	400	10	50C	300	60	150	Si	C214a
213	BR104F	400	10	50A	250		125A	Si	C219
214	BR104G	400	10	50A	250		125A	Si	C219
215▼	MP104	400	10	50	200	8.3	125	Si	C188e
216	SBR10A4	400	10	50A	300		150	Si	C189c
217	680-4	400	10	55C	50	8.3m	150	Si	C224f
218	BRS10-04	400	10	55C	200	8.3m	125A	Si	C189c
219	KBPC10-04*	400	10	55C	200		175S	Si	C224b
220♦	M19500/469-02	400	10	55C	100 §	8.3m	175J	Si	C267

SYMBOLS AND CODES EXPLAINED IN INTERPRETER

8. STANDARD RECOVERY BRIDGE RECTIFIERS - Single Phase (Cont'd)

IN ORDER OF: (1) IO MAX (2) PIV (3) @ TEMP & (4) TYPE NUMBER

LINE No.	4 TYPE NUMBER	2 PIV (V)	MAX AVG FWD DC CURRENT 1 Io MAX (A)	3 @ TEMP (°C)	MAX RATING SURGE CURR PEAK 1 Cy (A)	PULSE WIDTH (s)	MAX. TEMP (°C)	MAT	DRAWING No.
1	S10A40FR*	400	10	55C	100		150	Si	M1034a
2	SDA165D	400	10	55C	150		125	Si	C216c
3	SDA267D	400	10	55C	125		150C	Si	C216h
4♦	SDA304D	400	10	55C	125	8.3m	150	Si	C218e
5	VJ448X*	400	10	60C	75	8.3m	150J	Si	C216d
6	100JB4L	400	10	65C	130		150A	Si	C218c
7	MB104	400	10	75A	150		150	Si	C219j
8	MB104G	400	10	75A	150		175	Si	C219j
9▼	MP104G	400	10	75C	200	8.3m	150	Si	C188e
10	10SB400	400	10	80	300	8.3m	150	Si	C216d
11	10TB400	400	10	80	400	8.3m	150	Si	C230a
12	dc104	400	10.0	80C	125		150A	Si	M1196
13	VJ447*	400	10	80C	100	8.3m	150J	Si	C216d
14	VJ448*	400	10	80C	100	8.3m	150J	Si	C216d
15	FB1003	400	10	90C	200	10m	150	Si	C189b
16	FB1004	400	10	90C	200	10m	150J	Si	C189b
17	FB1004L	400	10	90C	200	10m	150J	Si	C216f
18	1N4437*	400	10	100C	100	8.3m	160J	Si	M463h
19	TJ118-5	500	10		300			Si	C224j
20	SBR10A5	500	10	50A	300		150	Si	C189c
21	680-5	500	10	55C	50	8.3m	150	Si	C224f
22	PM7A6	500	10	80C	150	10m	150A	Si	M1201
23	K850-6	600	10		300			Si	C188f
24▼	SRM10M	600	10					Si	
25	TJ118-6	600	10		300			Si	C224j
26♦	PK60	600	10	25A	150	8.3m	150	Si	
27	BR106	600	10.0	40A	250	8.0m	150S	Si	C219
28	SGA114W	600	10	40A	400	10m	70A	Si△	M1325
29	J06*	600	10	45A	200			Si	C218b
30	10HB60*	600	10	50C	300	60	150	Si	C214a
31	BR106F	600	10	50A	250		125A	Si	C219
32	BR106G	600	10	50A	250		125A	Si	C219
33▼	MP106	600	10	50	200	8.3	125	Si	C188e
34	SBR10A6	600	10	50A	300		150	Si	C189c
35	680-6	600	10	55C	50	8.3m	150	Si	C224f
36	BRS10-06	600	10	55C	200	8.3m	125A	Si	C189c
37	KBPC10-06*	600	10	55C	200		175S	Si	C224b
38♦	M19500/469-03	600	10	55C	100 §	8.3m	175J	Si	C267
39	S10A60FR*	600	10	55C	100		150	Si	M1034a
40	SDA165E	600	10	55C	150		125	Si	C216c
41	SDA267E	600	10	55C	125		150C	Si	C216h
42♦	SDA304E	600	10	55C	125	8.3m	150	Si	C218e
43	VJ648X*	600	10	60C	75	8.3m	150J	Si	C216d
44	100JB6L	600	10	65C	130		150A	Si	C218c
45	MB106	600	10	75A	150		150	Si	C219j
46	MB106G	600	10	75A	150		175	Si	C219j
47▼	MP106G	600	10	75C	200	8.3m	150	Si	C188e
48	10J4B41	600	10.0	80C	200	10m	150J	Si	C216l
49	10SB600	600	10	80	300	8.3m	150	Si	C216d
50	10TB600	600	10	80	400	8.3m	150	Si	C230a
51	dc106	600	10.0	80C	125		150A	Si	M1196
52	VJ647*	600	10	80C	100	8.3m	150J	Si	C216d
53	VJ648*	600	10	80C	100	8.3m	150J	Si	C216d
54	FB1006	600	10	90C	200	10m	150	Si	C189b
55	FB1006L	600	10	90C	200	10m	150J	Si	C216f
56	1N4438*	600	10	100C	100	8.3m	160J	Si	M463h
57	PM7A8	700	10	80C	150	10m	150A	Si	M1201
58	K850-8	800	10		300			Si	C188f
59	TJ118-8	800	10		300			Si	C224j
60♦	PK80	800	10	25A	150	8.3m	150	Si	
61	BR108	800	10.0	40A	250	8.0m	150S	Si	C219
62	10HB80*	800	10	50C	300	60	150	Si	C214a
63	BR108F	800	10	50A	250		125A	Si	C219
64	BR108G	800	10	50A	250		125A	Si	C219
65▼	MP108	800	10	50	200	8.3	125	Si	C188e
66	SBR10A8	800	10	50A	300		150	Si	C189c
67	BRS10-08	800	10	55C	200	8.3m	125A	Si	C189c
68	KBPC10-08*	800	10	55C	200		175S	Si	C224b
69♦	M19500/469-04	800	10	55C	100 §	8.3m	175J	Si	C267
70	SDA165F	800	10	55C	150		125	Si	C216c
71	SDA267F	800	10	55C	125		150C	Si	C216h
72♦	SDA304F	800	10	55C	125	8.3m	150	Si	C218e
73	100JB8L	800	10	65C	130		150A	Si	C218c
74	MB108	800	10	75A	150		150	Si	C219j
75	MB108G	800	10	75A	150		175	Si	C219j
76▼	MP108G	800	10	75C	200	8.3m	150	Si	C188e
77	dc108	800	10.0	80C	125		150A	Si	M1196
78	VJ847*	800	10	80C	100	8.3m	150J	Si	C216d
79	VJ848*	800	10	80C	100	8.3m	150J	Si	C216d
80	PM7A10	900	10	80C	150	10m	150A	Si	M1201
81	BR1010	1.0k	10.0	40A	250	8.0m	150S	Si	C219
82	BR1010F	1.0k	10	50A	250		125A	Si	C219
83	BR1010G	1.0k	10	50A	250		125A	Si	C219
84▼	MP1010	1.0k	10	50	200	8.3	125	Si	C188e
85	SBR10A10	1.0k	10	50A	300		150	Si	C189c
86	KBPC10-10*	1.0k	10	55C	200		175S	Si	C224b
87	SDA165G	1.0k	10	55C	150		125	Si	C216c
88	SDA267G	1.0k	10	55C	125		150C	Si	C216h
89♦	SDA304G	1.0k	10	55C	125	8.3m	150	Si	C218e
90	100JB10L	1.0k	10	65C	130		150A	Si	C218c
91▼	MP1010G	1.0k	10	75C	200	8.3m	150	Si	C188e
92	VJ1048*	1.0k	10	80C	100	8.3m	150J	Si	C216d
93	PM7A12	1.1k	10	80C	150	10m	150A	Si	M1201
94	100JB12L	1.2k	10	65C	130		150A	Si	C218c
95	SGM12	200	11	25				Si	M1094
96	SGM12R	200	11	25				Si	M1094
97	SGM12S	200	11	25				Si	M1094
98	SKB15-04A2*	400	11	45A	320	10m	150J	Si	M1065
99	SL1540	400	11	100C	60		150A	Si	M1243
100	SL15100	1.0k	11	100C	60		150A	Si	M1243
101	E814-0	50	12		300			Si	M1290
102	SCBH05FF	50	12		175		150	Si	C216h
103	SDA985-1	50	12		300			Si	C189d
104	BRS12-005	50	12	55C	300	8.3m	125A	Si	C189c
105▼	DB1200T	50	12	55A	300	16m	125	Si	C214
106▼	DB1200W	50	12	55A	300	16m	125	Si	C219
107	KBPC12-005*	50	12	55C	300		175S	Si	C224b
108	MDA980-1*	50	12	55C	300		175J	Si	C230b
109	NBS12-50	50	12	55C	150			Si	C224e
110	12TB050	50	12	80	400	8.3m	150	Si	C230a
111	E814-1	100	12		300			Si	M1290
112	SDA985-2	100	12		300			Si	C189d
113	SE114	100	12	40A	300	10m	100A	Si△	M1326†
114	BRS12-01	100	12	55C	300	8.3m	125A	Si	C189c
115▼	DB1201T	100	12	55A	300	16m	125	Si	C214
116▼	DB1201W	100	12	55A	300	16m	125	Si	C219
117	MDA980-2*	100	12	55C	300		175J	Si	C230b
118	NBS12-100	100	12	55C	150			Si	C224e
119	S10A10*	100	12	55C	125		150	Si	M1034a
120	S12A10FR*	100	12	55C	100		150	Si	C224d
121	SCBH10FF	100	12	55A	100		175J	Si	C216h
122	SL1510FR*	100	12	55C	125		150	Si	M1050
123	12TB100	100	12	80	400	8.3m	150	Si	C230a
124	SCBH15FF	150	12	55C	175		175J	Si	C216h
125	E814-2	200	12		300			Si	M1290
126	SDA985-3	200	12		300			Si	C189d
127	SGB2C	200	12	25				Si	M1093
128	SGB-2	200	12	40	50	10m	130S	Si	M1094
129	BRS12-02	200	12	55C	300	8.3m	125A	Si	C189c
130▼	DB1202T	200	12	55A	300	16m	125	Si	C214
131▼	DB1202W	200	12	55A	300	16m	125	Si	C219
132	KBPC12-02*	200	12	55C	300		175S	Si	C224b
133	MDA980-3*	200	12	55C	300		175J	Si	C230b
134	NBS12-200	200	12	55C	150			Si	C224e
135	S10A20*	200	12	55C	125		150	Si	M1034a
136	S12A20*	200	12	55C	125		150	Si	C224d
137	S12A20FR*	200	12	55C	100		150	Si	C224d
138	SL1520FR*	200	12	55C	125		150	Si	M1050
139	BY260-200	200	12	60A			150J	Si	C231
140	12TB200	200	12	80	400	8.3m	150	Si	C230a
141	E814-3	300	12		300			Si	M1290
142	SDA985-4	300	12		300			Si	C189d
143	MDA980-4*	300	12	55C	300		175J	Si	C230b
144	NBS12-300	300	12	55C	150			Si	C224e
145	E814-4	400	12		300			Si	M1290
146	SDA985-5	400	12		300			Si	C189d
147	SGB4C	400	12	25				Si	M1094
148	SGB-4	400	12	40	50	10m	130S	Si	M1094
149	BRS12-04	400	12	55C	300	8.3m	125A	Si	C189c
150▼	DB1204T	400	12	55A	300	16m	125	Si	C214
151▼	DB1204W	400	12	55A	300	16m	125	Si	C219
152	KBPC12-04*	400	12	55C	300		175S	Si	C224b
153	MDA980-5*	400	12	55C	300		175J	Si	C230b
154	NBS12-400	400	12	55C	150			Si	C224e
155	S10A40*	400	12	55C	125		150	Si	M1034a
156	S12A40*	400	12	55C	125		150	Si	C224d
157	S12A40FR*	400	12	55C	100		150	Si	C224d
158	SL1540FR*	400	12	55C	125		150	Si	M1050
159	BY260-400	400	12	60A			150J	Si	C231
160	12TB400	400	12	80	400	8.3m	150	Si	C230a
161	SGB5C	500	12	25				Si	M1094
162	SGB-5	500	12	40	50	10m	130S	Si	M1094
163	E814-6	600	12		300			Si	M1290
164	BRS12-06	600	12	55C	300	8.3m	125A	Si	C189c
165▼	DB1206T	600	12	55A	300	16m	125	Si	C214
166▼	DB1206W	600	12	55A	300	16m	125	Si	C219
167	KBPC12-06*	600	12	55C	300		175S	Si	C224b
168	MDA980-6*	600	12	55C	300		175J	Si	C230b
169	NBS12-600	600	12	55C	150			Si	C224e
170	S10A60*	600	12	55C	125		150	Si	M1034a
171	S12A60*	600	12	55C	125		150	Si	C224d
172	S12A60FR*	600	12	55C	100		150	Si	C224d
173	SL1560FR*	600	12	55C	125		150	Si	M1050
174	BY260-600	600	12	60A			150J	Si	C231
175	12TB600	600	12	80	400	8.3m	150	Si	C230a
176	E814-8	800	12		300			Si	M1290
177	SGB8C	800	12	25				Si	M1094
178	BRS12-08	800	12	55C	300	8.3m	125A	Si	C189c
179▼	DB1208T	800	12	55A	300	16m	125	Si	C214
180▼	DB1208W	800	12	55A	300	16m	125	Si	C219
181	KBPC12-08*	800	12	55C	300		175S	Si	C224b
182	NBS12-800	800	12	55C	150			Si	C224e
183	S10A80*	800	12	55C	125		150	Si	M1034a
184	S12A80*	800	12	55C	125		150	Si	C224d
185▼	DB1210T	1.0k	12	55A	300	16m	125	Si	C214
186▼	DB1210W	1.0k	12	55A	300	16m	125	Si	C219
187	KBPC12-10*	1.0k	12	55C	300		175S	Si	C224b
188	NBS12-1000	1.0k	12	55C	150			Si	C224e
189	S10A100*	1.0k	12	55C	125		150	Si	M1034a
190	S12A100*	1.0k	12	55C	125		150	Si	C224d
191	SKB25-04*	400	13.5	45A	320	10m	150J	Si	M1066
192	SCBA05F*	50	14.5	55	80		150	Si	C224d
193	SCBA1F*	100	14.5	55	80		150	Si	C224d
194	E815-0	50	15		300			Si	M1290
195	CTN1505	50	15	50A	400		125A	Si	M1256
196	CTP1505	50	15	50A	400		125A	Si	M1256
197	BRS15-005	50	15	55C	300	8.3m	125A	Si	C189c
198▼	DB1500T	50	15	55A	300	16m	125	Si	C214
199▼	DB1500W	50	15	55A	300	16m	125	Si	C219
200	KBPC15-005*	50	15	55C	300		175S	Si	C224b
201	SDA980-1	50	15	55C	300		175J	Si	C189d
202	SDA980-1F	50	15	55C	300		175J	Si	C189d
203	15TB050	50	15	80	400	8.3m	150	Si	C230a
204	BR1505	50	15.0	80.C	400	8.0m	150S	Si	C224b
205	BR1505F	50	15	80A	400		125A	Si	C224d
206	BR1505G	50	15	80A	400		125A	Si	C224d
207	CSB1505	50	15.0	80C	250		150A	Si	M1017
208	SB1505	50	15	80H	300			Si	M1342
209	VL048*	50	15	80C	100	8.3m	80C	Si	M1091
210▼	MB1505	50	15	100	400	8.3	125	Si	M1349
211	E815-1	100	15		300			Si	M1290
212	CTN151	100	15	50A	400		125A	Si	M1256
213	CTP151	100	15	50A	400		125A	Si	M1256
214	BRS15-01	100	15	55C	300	8.3m	125A	Si	C189c
215▼	DB1501T	100	15	55A	300	16m	125	Si	C214
216▼	DB1501W	100	15	55A	300	16m	125	Si	C219
217	KBPC15-01	100	15	55C	300	8.3m	125J	Si	C219a†
218	SDA980-2	100	15	55C	300		175J	Si	C189d
219	SDA980-2F	100	15	55C	300		175J	Si	C189d
220	15TB100	100	15	80	400	8.3m	150	Si	C230a

SYMBOLS AND CODES EXPLAINED IN INTERPRETER

8. STANDARD RECOVERY BRIDGE RECTIFIERS - Single Phase (Cont'd)

IN ORDER OF: (1) IO MAX (2) PIV (3) @ TEMP & (4) TYPE NUMBER

LINE No.	4 TYPE NUMBER	2 PIV (V)	MAX AVG FWD DC CURRENT 1 Io MAX (A)	3 @ TEMP (°C)	MAX RATING SURGE CURR PEAK 1 Cy (A)	PULSE WIDTH (s)	MAX. TEMP (°C)	MAT	DRAWING No.
1	BR151	100	15.0	80.C	400	8.0m	150S	Si	C224b
2	BR151F	100	15	80A	400		125A	Si	C224d
3	BR151G	100	15	80A	400		125A	Si	C224d
4	CSB151	100	15.0	80C	250		150A	Si	M1017
5	SB151	100	15	80H	300			Si	M1342
6	VL148*	100	15	80C	100	8.3m	80C	Si	M1091
7▼	MB151	100	15	100	400	8.3	125	Si	M1349
8	PM7A2Q	150	15	80C	240	10m	150A	Si	M1201
9	E815-2	200	15		300			Si	M1290
10	SGM52	200	15	25				Si	M1094
11	SGM52R	200	15	25				Si	M1094
12	SGM52S	200	15	25				Si	M1094
13	SC114G1	200	15	35A	280	10m	100A	SiΔ	M1326
14	SC116G1	200	15	35A	280	10m	100A	SiΔ	M1330
15	SCA116BW	200	15	35A	400	10m	70A	SiΔ	M1333
16	CTN152	200	15	50A	400		125A	Si	M1256
17	CTP152	200	15	50A	400		125A	Si	M1256
18	BRS15-02	200	15	55C	300	8.3m	125A	Si	C185c
19▼	DB1502T	200	15	55A	300	16m	125	Si	C214
20▼	DB1502W	200	15	55A	300	16m	125	Si	C219
21	KBPC15-02*	200	15	55C	300		175S	Si	C224b
22	SCAJ2*	200	15	55	50		150	Si	C216h
23	SDA980-3	200	15	55C	300		175J	Si	C189d
24	SDA980-3F	200	15	55C	300		175J	Si	C189d
25	SL1520*	200	15	55C	125		150	Si	M1050
26	15TB200	200	15	80	400	8.3m	150	Si	C230a
27	BR152	200	15.0	80.C	400	8.0m	150S	Si	C224b
28	BR152F	200	15	80A	400		125A	Si	C224d
29	BR152G	200	15	80A	400		125A	Si	C224d
30	CSB152	200	15.0	80C	250		150A	Si	M1017
31	SB152	200	15	80H	300			Si	M1342
32	VL247*	200	15	80C	100	8.3m	80C	Si	M1091
33	VL248*	200	15	80C	100	8.3m	80C	Si	M1091
34▼	MB152	200	15	100	400	8.3	125	Si	M1349
35	E815-3	300	15		300			Si	M1290
36	SDA980-4	300	15	55C	300		175J	Si	C189d
37	SDA980-4F	300	15	55C	300		175J	Si	C189d
38	PM7A4Q	300	15	80C	240	10m	150A	Si	M1201
39	E815-4	400	15		300			Si	M1290
40	SE114G1	400	15	35A	280	10m	100A	SiΔ	M1326
41	SE116G1	400	15	35A	280	10m	100A	SiΔ	M1330
42	SEA116BW	400	15	35A	400	10m	70A	SiΔ	M1333
43	SKB30-04A1*	400	15	45A	320	10m	150J	Si	M1067
44	CTN154	400	15	50A	400		125A	Si	M1256
45	CTP154	400	15	50A	400		125A	Si	M1256
46	BRS15-04	400	15	55C	300	8.3m	125A	Si	C189c
47▼	DB1504T	400	15	55A	300	16m	125	Si	C214
48▼	DB1504W	400	15	55A	300	16m	125	Si	C219
49	KBPC15-04*	400	15	55C	300		175S	Si	C224b
50	SCAJ4*	400	15	55	50		150	Si	C216h
51	SDA980-5	400	15	55C	300		175J	Si	C189d
52	SDA980-5F	400	15	55C	300		175J	Si	C189d
53	15TB400	400	15	80	400	8.3m	150	Si	C230a
54	BR154	400	15.0	80C	400	8.0m	150S	Si	C224b
55	BR154F	400	15	80A	400		125A	Si	C224d
56	BR154G	400	15	80A	400		125A	Si	C224d
57	CSB154	400	15.0	80C	250		150A	Si	M1017
58	SB154	400	15	80H	300			Si	M1342
59	VL447*	400	15	80C	100	8.3m	80C	Si	M1091
60	VL448*	400	15	80C	100	8.3m	80C	Si	M1091
61▼	MB154	400	15	100	400	8.3	125	Si	M1349
62	PM7A6Q	500	15	80C	240	10m	150A	Si	M1201
63	E815-6	600	15		300			Si	M1290
64	HRSCAJ6	600	15		50		150	Si	C216h
65	SG114G1	600	15	35A	280	10m	100A	SiΔ	M1326
66	SG116G1	600	15	35A	280	10m	100A	SiΔ	M1330
67	SGA116BW	600	15	35A	400	10m	70A	SiΔ	M1333
68	CTN156	600	15	50A	400		125A	Si	M1256
69	CTP156	600	15	50A	400		125A	Si	M1256
70	BRS15-06	600	15	55C	300	8.3m	125A	Si	C189c
71▼	DB1506T	600	15	55A	300	16m	125	Si	C214
72▼	DB1506W	600	15	55A	300	16m	125	Si	C219
73	KBPC15-06*	600	15	55C	300		175S	Si	C224b
74	SCAJ6*	600	15	55	50		150	Si	C216h
75	SDA980-6	600	15	55C	300		175J	Si	C189d
76	SDA980-6F	600	15	55C	300		175J	Si	C189d
77	SL1560*	600	15	55C	125		150	Si	M1050
78	15TB600	600	15	80	400	8.3m	150	Si	C230a
79	BR156	600	15.0	80C	400	8.0m	150S	Si	C224b
80	BR156F	600	15	80A	400		125A	Si	C224d
81	BR156G	600	15	80A	400		125A	Si	C224d
82	CSB156	600	15.0	80C	250		150A	Si	M1017
83	SB156	600	15	80H	300			Si	M1342
84	VL647*	600	15	80C	100	8.3m	80C	Si	M1091
85	VL648*	600	15	80C	100	8.3m	80C	Si	M1091
86▼	MB156	600	15	100	400	8.3	125	Si	M1349
87	PM7A8Q	700	15	80C	240	10m	150A	Si	M1201
88	E815-8	800	15		300			Si	M1290
89	SJ114G1	800	15	35A	280	10m	100A	SiΔ	M1326
90	SJ116G1	800	15	35A	280	10m	100A	SiΔ	M1330
91	CTN158	800	15	50A	400		125A	Si	M1256
92	CTP158	800	15	50A	400		125A	Si	M1256
93	BRS15-08	800	15	55C	300	8.3m	125A	Si	C189c
94▼	DB1508T	800	15	55A	300	16m	125	Si	C214
95▼	DB1508W	800	15	55A	300	16m	125	Si	C219
96	KBPC15-08*	800	15	55C	300		175S	Si	C224b
97	SDA980-8	800	15	55C	300		175J	Si	C189d
98	SL1580*	800	15	55C	125		150	Si	M1050
99	BR158	800	15.0	80C	400	8.0m	150S	Si	C224b
100	BR158F	800	15	80A	400		125A	Si	C224d
101	BR158G	800	15	80A	400		125A	Si	C224d
102	CSB158	800	15.0	80C	250		150A	Si	M1017
103	VL848*	800	15	80C	100	8.3m	80C	Si	M1091
104▼	MB158	800	15	100	400	8.3	125	Si	M1349
105	PM7A10Q	900	15	80C	240	10m	150A	Si	M1201
106	CTN1510	1.0k	15	50A	400		125A	Si	M1256
107	CTP1510	1.0k	15	50A	400		125A	Si	M1256
108▼	DB1510T	1.0k	15	55A	300	16m	125	Si	C214
109▼	DB1510W	1.0k	15	55A	300	16m	125	Si	C219
110	KBPC15-10*	1.0k	15	55C	300		175S	Si	C224b
111	SDA980-10	1.0k	15	55C	300		175J	Si	C189d
112	BR1510	1.0k	15.0	80C	400	8.0m	150S	Si	C224b
113	BR1510F	1.0k	15	80A	400		125A	Si	C224d
114	BR1510G	1.0k	15	80A	400		125A	Si	C224d
115	VL1048*	1.0k	15	80C	100	8.3m	80C	Si	M1091
116▼	MB1510	1.0k	15	100	400	8.3	125	Si	M1349
117	PM7A12Q	1.1k	15	80C	240	10m	150A	Si	M1201
118	S10A05HE	50	16	100C	65		150A	Si	M1240
119	S10A10HE	100	16	100C	65		150A	Si	M1240
120	S10A15HE	150	16	100C	65		150A	Si	M1240
121	FC13U	100	17	85C	300		125J	Si	M1288
122	FC14U	100	17	85C	300		125J	Si	M1288a
123	SCBA15FF	150	17	55C	175		175J	Si	C224d
124	FC13A	200	17	85C	300		125J	Si	M1288
125	FC14A	200	17	85C	300		125J	Si	M1288a
126	FC13B	400	17	85C	300		125J	Si	M1288
127	FC14B	400	17	85C	300		125J	Si	M1288a
128	SKB25-06*	600	17	45A	320	10m	150J	Si	M1066
129	FC13C	600	17	85C	300		125J	Si	M1288
130	FC14C	600	17	85C	300		125J	Si	M1288a
131	SKB15-08A2*	800	17	45A	320	10m	150J	Si	M1065
132	SKB25-08*	800	17	45A	320	10m	150J	Si	M1066
133	FC13D	800	17	85C	300		125J	Si	M1288
134	FC14D	800	17	85C	300		125J	Si	M1288a
135	FC13E	1.0k	17	85C	300		125J	Si	M1288
136	SKB15-12A2*	1.2k	17	45A	320	10m	150J	Si	M1065
137	FC13F	1.2k	17	85C	300		125J	Si	M1288
138	FC13G	1.4k	17	85C	300		125J	Si	M1288
139	SKB15-16A2*	1.6k	17	45A	320	10m	150J	Si	M1065
140	SCBA05FF	50	17.5		175		150	Si	C224d
141♦	SDA130A	50	17.5	55C	150	8.3m	125C	Si	C218b
142	SCBA10FF	100	17.5	55A	175		175J	Si	C224d
143♦	SDA130B	100	17.5	55C	150	8.3m	125C	Si	C218b
144♦	SDA130C	200	17.5	55C	150	8.3m	125C	Si	C218b
145♦	SDA130D	400	17.5	55C	150	8.3m	125C	Si	C218b
146♦	SDA130E	600	17.5	55C	150	8.3m	125C	Si	C218b
147♦	SDA130F	800	17.5	55C	150	8.3m	125C	Si	C218b
148♦	SDA130G	1.0k	17.5	55C	150	8.3m	125C	Si	C218b
149	803-1	50	20	55C	125	8.3m	150	Si	C218e
150	803-2	100	20	55C	125	8.3m	150	Si	C218e
151	S25A10FR*	100	20	55C	150		150	Si	C224d
152	803-3	125	20	55C	125	8.3m	150	Si	C218e
153	803-4	150	20	55C	125	8.3m	150	Si	C218e
154	PM7A2R	150	20	80C	470	10m	150A	Si	M1201
155	SCB114Y	200	20	40A	400	10m	70A	SiΔ	M1328
156	S25A20FR*	200	20	55C	150		150	Si	C224d
157	PM7A4R	300	20	80C	470	10m	150A	Si	M1201
158	SEB114Y	400	20	40A	400	10m	70A	SiΔ	M1328
159	SKB50-04A3*	400	20	45A	600	10m	150J	Si	M1068
160	S25A40FR*	400	20	55C	150		150	Si	C224d
161	MDB20B4	400	20	85C	350		125J	Si	M1324
162	PM7A6R	500	20	80C	470	10m	150A	Si	M1201
163	SGB114Y	600	20	40A	400	10m	70A	SiΔ	M1328
164	S25A60FR*	600	20	55C	150		150	Si	C224d
165	MDB20B6	600	20	85C	380		125J	Si	M1324
166	PM7A8R	700	20	80C	470	10m	150A	Si	M1201
167	PM7A10R	900	20	80C	470	10m	150A	Si	M1201
168	PM7A12R	1.1k	20	80C	470	10m	150A	Si	M1201
169	SKB30-08A1*	800	21	45A	320	10m	150J	Si	M1067
170	BRS25-01(M)	10	25	55C	300	8.3m	125A	Si	C189c
171	G775-0U	50	25		300			Si	C224k
172▼	SRM25F	50	25					Si	
173	J775-0	50	25	25A	300			Si	C224k
174	K-005	50	25	45C	300	10m	150C	Si	C218b
175	CTN2505	50	25	50A	400		125A	Si	M1256
176	CTP2505	50	25	50A	400		125A	Si	M1256
177	BRS25-005(M)	50	25	55C	300	8.3m	125A	Si	C189c
178▼	DB2500T	50	25	55A	300	16m	125	Si	M1306
179▼	DB2500W	50	25	55A	300	16m	125	Si	M1230
180	FB2500	50	25	55C	300	10m	150J	Si	C218g
181	FB2500L	50	25	55	300	10m	125	Si	M1230
182	GIB2500	50	25	55C	400	8.3m	175J	Si	M1283
183	KBPC25-005*	50	25	55C	300		175S	Si	C224b
184	MDA2500	50	25	55C	400		175J	Si	C230
185	MDA2550	50	25	55C	400		175J	Si†	C230
186	NBS25-50	50	25	55C	300			Si	C224e
187	250JB05L	50	25	65C	350		150A	Si	C218c
188	BR2505	50	25	80H	300		175A	Si	C224c
189	BR2505F	50	25	80A	400		125A	Si	C224d
190	BR2505G	50	25	80A	400		125A	Si	C224d
191	CSB2505	50	25.0	80C	350		150A	Si	M1017
192	SB2505	50	25	80H	300			Si	M1342
193▼	MB2505	50	25	100	400	8.3	125	Si	M1349
194	G775-1U	100	25		300			Si	C224k
195▼	SRM25A	100	25					Si	
196	J775-1	100	25	25A	300			Si	C224k
197	K-01	100	25	45C	300	10m	150C	Si	C218b
198	CTN251	100	25	50A	400		125A	Si	M1256
199	CTP251	100	25	50A	400		125A	Si	M1256
200	679-1	100	25	55C	150	8.3m	150	Si	C224g
201▼	DB2501T	100	25	55A	300	16m	125	Si	M1306
202▼	DB2501W	100	25	55A	300	16m	125	Si	M1230
203	FB2501	100	25	55C	300	10m	150J	Si	C218g
204	FB2501L	100	25	55	300	10m	125	Si	M1230
205	GIB2501	100	25	55C	400	8.3m	175J	Si	M1283
206	KBPC25-01	100	25	55C	300	8.3m	125J	Si	C224b
207	MDA2501	100	25	55C	400		175J	Si	C230
208	MDA2551	100	25	55C	400		175J	Si†	C230
209	NBS25-100	100	25	55C	300			Si	C224e
210	250JB1L	100	25	65C	350		150A	Si	C218c
211	BR251	100	25	80H	300		175A	Si	C224c
212	BR251F	100	25	80A	400		125A	Si	C224d
213	BR251G	100	25	80A	400		125A	Si	C224d
214	CSB251	100	25.0	80C	350		150A	Si	M1017
215	SB251	100	25	80H	300			Si	M1342
216	FD13U	100	25	85C	400		125J	Si	M1288
217	FD14U	100	25	85C	400		125J	Si	M1288
218	MB25-100	100	25	85C	350	10m	125A	Si	C218c
219▼	MB251	100	25	100	400	8.3	125	Si	M1349
220	VY100X*	100	25	100C	150	3.8m	150J	Si	M463h

SYMBOLS AND CODES EXPLAINED IN INTERPRETER

8. STANDARD RECOVERY BRIDGE RECTIFIERS - Single Phase (Cont'd)

IN ORDER OF: (1) IO MAX (2) PIV (3) @ TEMP & (4) TYPE NUMBER

LINE No.	4 TYPE NUMBER	2 PIV (V)	MAX AVG FWD DC CURRENT 1 Io MAX (A)	3 @ TEMP (°C)	MAX RATING SURGE CURR PEAK 1 Cy (A)	PULSE WIDTH (s)	MAX. TEMP (°C)	MAT	DRAWING No.
1	VYH100X*	100	25	100C	150	3.8m	150J	Si	M463h$
2	G775-2U	200	25		300			Si	C224k
3▼	SRM25B	200	25					Si	
4	25D4B41	200	25	25A	250	10m	150J	Si	M973
5	J775-2	200	25	25A	300			Si	C224k
6	K-02	200	25	45C	300	10m	150C	Si	C218b
7	CTN252	200	25	50A	400		125A	Si	M1256
8	CTP252	200	25	50A	400		125A	Si	M1256
9	679-2	200	25	55C	150	8.3m	150	Si	C224g
10	BRS25-02(M)	200	25	55C	300	8.3m	125A	Si	C189
11	BY261-200	200	25	55A			175J	Si	C218
12▼	DB2502T	200	25	55A	300	16m	125	Si	M1306
13▼	DB2502W	200	25	55A	300	16m	125	Si	M1230
14	FB2502	200	25	55C	300	10m	150J	Si	C218g
15	FB2502L	200	25	55	300	10m	125	Si	M1230
16	GIB2502	200	25	55C	400	8.3m	175J	Si	M1283
17	KBPC25-02*	200	25	55C	300		175S	Si	C224b
18	MDA2502	200	25	55C	400		175J	Si	C230
19	NBS25-200	200	25	55C	300			Si	C224e
20	S25A20*	200	25	55C	150		150	Si	C224d
21	250JB2L	200	25	65C	350		150A	Si	C218c
22	BR252	200	25	80H	300		175A	Si	C224c
23	BR252F	200	25	80A	400		125A	Si	C224d
24	BR252G	200	25	80A	400		125A	Si	C224d
25	CSB252	200	25.0	80C	400		150A	Si	M1017
26	SB252	200	25	80H	300			Si	M1342
27	EFD13A	200	25	85C	400		125J	Si	M1151
28	FD14A	200	25	85C	400		125J	Si	M1288
29	MB25-200	200	25	85C	350	10m	125A	Si	C218c
30▼	MB252	200	25	100	400	8.3	125	Si	M1349
31	VT200*	200	25	100C	250	8.3m	180J	Si	M463h
32	VTH200*	200	25	100C	250	8.3m	180J	Si	M463h$
33	VY200X*	200	25	100C	150	3.8m	150J	Si	M463h
34	VYH200X*	200	25	100C	150	3.8m	150J	Si	M463h$
35	G775-3U	300	25		300			Si	C224k
36	J775-3	300	25	25A	300			Si	C224k
37	679-3	300	25	55C	150	8.3m	150	Si	C224g
38	NBS25-300	300	25	55C	300			Si	C224e
39	G775-4U	400	25		300			Si	C224k
40▼	SRM25D	400	25					Si	
41	25G4B41	400	25	25A	250	10m	150J	Si	M973
42	J775-4	400	25	25A	300			Si	C224k
43	K-04	400	25	45C	300	10m	150C	Si	C218b
44	CTN254	400	25	50A	400		125A	Si	M1256
45	CTP254	400	25	50A	400		125A	Si	M1256
46	679-4	400	25	55C	150	8.3m	150	Si	C224g
47	BRS25-04(M)	400	25	55C	300	8.3m	125A	Si	C189
48	BY261-400	400	25	55A			175J	Si	C218
49▼	DB2504T	400	25	55A	300	16m	125	Si	M1306
50▼	DB2504W	400	25	55A	300	16m	125	Si	M1230
51	FB2504	400	25	55C	300	10m	150J	Si	C218g
52	FB2504L	400	25	55	300	10m	125	Si	M1230
53	GIB2504	400	25	55C	400	8.3m	175J	Si	M1283
54	KBPC25-04*	400	25	55C	300		175S	Si	C224b
55	MDA2504	400	25	55C	400		175J	Si	C230
56	NBS25-400	400	25	55C	300			Si	C224e
57	S25A40	400	25	55C	150		150	Si	C224d
58	250JB4L	400	25	65C	350		150A	Si	C218c
59	BR254	400	25	80H	300		175A	Si	C224c
60	BR254F	400	25	80A	400		125A	Si	C224d
61	BR254G	400	25	80A	400		125A	Si	C224d
62	CSB254	400	25.0	80C	400		150A	Si	M1017
63	SB254	400	25	80H	300			Si	M1342
64	EFD13B	400	25	85C	400		125J	Si	M1151
65	FD14B	400	25	85C	400		125J	Si	M1288
66	MB25-400	400	25	85C	350	10m	125A	Si	C218c
67	MB25-600	400	25	85C	350	10m	125A	Si	C218c
68▼	MB254	400	25	100	400	8.3	125	Si	M1349
69	VT400*	400	25	100C	250	8.3m	180J	Si	M463h
70	VTH400*	400	25	100C	250	8.3m	180J	Si	M463h$
71	VY400X*	400	25	100C	150	3.8m	150J	Si	M463h
72	VYH400X*	400	25	100C	150	3.8m	150J	Si	M463h$
73	679-5	500	25	55C	150	8.3m	150	Si	C224g
74	G775-6U	600	25		300			Si	C224k
75▼	SRM25M	600	25					Si	
76	25J4B41	600	25	25A	250	10m	150J	Si	M973
77	J775-6	600	25	25A	300			Si	C224k
78	K-06	600	25	45C	300		150C	Si	C218b
79	CTN256	600	25	50A	400		125A	Si	M1256
80	CTP256	600	25	50A	400		125A	Si	M1256
81	679-6	600	25	55C	150	8.3m	150	Si	C224g
82	BRS25-06(M)	600	25	55C	300	8.3m	125A	Si	C189
83	BY261-600	600	25	55A			175J	Si	C218
84▼	DB2506T	600	25	55A	300	16m	125	Si	M1306
85▼	DB2506W	600	25	55A	300	16m	125	Si	M1230
86	FB2506	600	25	55C	300	10m	150J	Si	C218g
87	FB2506L	600	25	55	300	10m	125	Si	M1230
88	GIB2506	600	25	55C	400	8.3m	175J	Si	M1283
89	KBPC25-06*	600	25	55C	300		175S	Si	C224b
90	MDA2506	600	25	55C	400		175J	Si	C230
91	NBS25-600	600	25	55C	300			Si	C224e
92	S25A60*	600	25	55C	150		150	Si	C224d
93	250JB6L	600	25	65C	350		150A	Si	C218c
94	BR256	600	25	80H	300		175A	Si	C224c
95	BR256F	600	25	80A	400		125A	Si	C224d
96	BR256G	600	25	80A	400		125A	Si	C224d
97	CSB256	600	25.0	80C	400		150A	Si	M1017
98	SB256	600	25	80H	300			Si	M1342
99	EFD13C	600	25	85C	400		125J	Si	M1151
100	FD14C	600	25	85C	400		125J	Si	M1288
101▼	MB256	600	25	100	400	8.3	125	Si	M1349
102	VT600*	600	25	100C	250	8.3m	180J	Si	M463h
103	VTH600*	600	25	100C	250	8.3m	180J	Si	M463h$
104	G775-8U	800	25		300			Si	C224k
105	J775-8	800	25	25A	300			Si	C224k
106	CTN258	800	25	50A	400		125A	Si	M1256
107	CTP258	800	25	50A	400		125A	Si	M1256
108	BRS25-08(M)	800	25	55C	300	8.3m	125A	Si	C189
109▼	DB2508T	800	25	55A	300	16m	125	Si	M1306
110▼	DB2508W	800	25	55A	300	16m	125	Si	M1230
111	GIB2508	800	25	55C	400	8.3m	175J	Si	M1283
112	KBPC25-08*	800	25	55C	300		175S	Si	C224b
113	NBS25-800	800	25	55C	300			Si	C224e
114	S25A80*	800	25	55C	150		150	Si	C224d
115	250JB8L	800	25	65C	350		150A	Si	C218c
116	BR258	800	25.0	80C	400	8.0m	150S	Si	C224b
117	BR258F	800	25	80A	400		125A	Si	C224d
118	BR258G	800	25	80A	400		125A	Si	C224d
119	CSB258	800	25.0	80C	400		150A	Si	M1017
120	EFD13D	800	25	85C	400		125J	Si	M1151
121	FD14D	800	25	85C	400		125J	Si	M1288
122	MB25-800	800	25	85C	350	10m	125A	Si	C218c
123▼	MB258	800	25	100	400	8.3	125	Si	M1349
124	CTN2510	1.0k	25	50A	400		125A	Si	M1256
125	CTP2510	1.0k	25	50A	400		125A	Si	M1256
126▼	DB2510T	1.0k	25	55A	300	16m	125	Si	M1306
127▼	DB2510W	1.0k	25	55A	300	16m	125	Si	M1230
128	GIB2510	1.0k	25	55C	400	8.3m	175J	Si	M1283
129	KBPC25-10*	1.0k	25	55C	300		175S	Si	C224b
130	NBS25-1000	1.0k	25	55C	300			Si	C224e
131	S25A100*	1.0k	25	55C	150		150	Si	C224d
132	250JB10L	1.0k	25	65C	350		150A	Si	C218c
133	BR2510	1.0k	25.0	80C	400	8.0m	150S	Si	C224b
134	BR2510F	1.0k	25	80A	400		125A	Si	C224d
135	BR2510G	1.0k	25	80A	400		125A	Si	C224d
136	EFD13E	1.0k	25	85C	400		125J	Si	M1151
137	FD14E	1.0k	25	85C	400		125J	Si	M1288
138	MB25-1000	1.0k	25	85C	350	10m	125A	Si	C218c
139▼	MB2510	1.0k	25	100	400	8.3	125	Si	M1349
140	250JB12L	1.2k	25	65C	350		150A	Si	C218c
141	EFD13F	1.2k	25	85C	400		125J	Si	M1151
142	FD14F	1.2k	25	85C	400		125J	Si	M1288
143	MB25-1200	1.2k	25	85C	350	10m	125A	Si	C218c
144	EFD13G	1.4k	25	85C	400		125J	Si	M1151
145	FD14G	1.4k	25	85C	400		125J	Si	M1288
146	PBT05$	50	27.5	55	300	8.3m	150	Si	M543
147	SKB30-12A1*	1.2k	29	45A	320	10m	150J	Si	M1067
148	SKB30-16A1*	1.6k	29	45A	320	10m	150J	Si	M1067
149	SDA990-1F	50	30		300			Si	C189d
150	30HB050*	50	30	50C	400	60	150	Si	C218a
151	MDA990-1	50	30	55C	300		175J	Si	C230b
152	NBS30-50	50	30	55C	400			Si	C224e
153	SDA990-1	50	30	55C	300		175J	Si	C189d
154	VK048X*	50	30	60C	150		135J	Si	M1091
155	30TB050	50	30	80	400	8.3m	150	Si	C230a
156	VK048*	50	30	80C	300	8.3m	175J	Si	M1091
157	SDA990-2F	100	30		300			Si	C189d
158	30HB100*	100	30	50C	400	60	150	Si	C218a
159	MDA990-2	100	30	55C	300		175J	Si	C230b
160	NBS30-100	100	30	55C	400			Si	C224e
161	SDA990-2	100	30	55C	300		175J	Si	C189d
162	VK148X*	100	30	60C	150		135J	Si	M1091
163	30TB100	100	30	80	400	8.3m	150	Si	C230a
164	VK148*	100	30	80C	300	8.3m	175J	Si	M1091
165	SET061211	150	30	55C	150		175J	Si	M1267
166	SDA990-3F	200	30		300			Si	C189d
167	QC114H1	200	30	35A	400	10m	100A	SiΔ	M1327a
168	QC116H1	200	30	35A	400	10m	100A	SiΔ	M1334
169	SCB116BY	200	30	40A	400	10m	70A	SiΔ	M1335a
170	SCC114Y	200	30	40A	400	10m	70A	SiΔ	M1328a
171	30HB200*	200	30	50C	400	60	150	Si	C218a
172	MDA990-3	200	30	55C	300		175J	Si	C230b
173	NBS30-200	200	30	55C	400			Si	C224e
174	SDA990-3	200	30	55C	300		175J	Si	C189d
175	VK248X*	200	30	60C	150		135J	Si	M1091
176	30TB200	200	30	80	400	8.3m	150	Si	C230a
177	VK247*	200	30	80C	300	8.3m	175J	Si	M1091
178	VK248*	200	30	80C	300	8.3m	175J	Si	M1091
179	MHO15-02do3	200	30	81C	270	10m		Si	M1074
180	SDA990-4F	300	30		300			Si	C189d
181	MDA990-4	300	30	55C	300		175J	Si	C230b
182	NBS30-300	300	30	55C	400			Si	C224e
183	SDA990-4	300	30	55C	300		175J	Si	C189d
184	SDA990-5F	400	30		300			Si	C189d
185	QE114H1	400	30	35A	400	10m	100A	SiΔ	M1327a
186	QE116H1	400	30	35A	400	10m	100A	SiΔ	M1334
187	SEB116BY	400	30	40A	400	10m	70A	SiΔ	M1335a
188	SEC114Y	400	30	40A	400	10m	70A	SiΔ	M1328a
189	30HB400*	400	30	50C	400	60	150	Si	C218a
190	MDA990-5	400	30	55C	300		175J	Si	C230b
191	NBS30-400	400	30	55C	400			Si	C224e
192	SDA990-5	400	30	55C	300		175J	Si	C189d
193	SET061204	400	30	55C	150		175J	Si	M1267
194	VK448X*	400	30	60C	150		135J	Si	M1091
195	30TB400	400	30	80	400	8.3m	150	Si	C230a
196	VK447*	400	30	80C	300	8.3m	175J	Si	M1091
197	VK448*	400	30	80C	300	8.3m	175J	Si	M1091
198	MHF15-04do3	400	30	81C	270	10m		Si	M1074
199	MHO15-04do3	400	30	81C	270	10m		Si	M1074
200	MDB30A4	400	30	85C	600		125J	Si	M1324
201	MHF15-05do3	500	30	81C	270	10m		Si	M1074
202	MHO15-05do3	500	30	81C	270	10m		Si	M1074
203	SDA990-6F	600	30		300			Si	C189d
204	QG114H1	600	30	35A	400	10m	100A	SiΔ	M1327a
205	QG116H1	600	30	35A	400	10m	100A	SiΔ	M1334
206	SGB116BY	600	30	40A	400	10m	70A	SiΔ	M1335a
207	SGC114Y	600	30	40A	400	10m	70A	SiΔ	M1328a
208	30HB600*	600	30	50C	400	60	150	Si	C218a
209	MDA990-6	600	30	55C	300		175J	Si	C230b
210	NBS30-600	600	30	55C	400			Si	C224e
211	SDA990-6	600	30	55C	300		175J	Si	C189d
212	30TB600	600	30	80	400	8.3m	150	Si	C230a
213	VK647*	600	30	80C	300	8.3m	175J	Si	M1091
214	VK648*	600	30	80C	300	8.3m	175J	Si	M1091
215	MHO15-06do3	600	30	81C	270	10m		Si	M1074
216	MDB30A6	600	30	85C	660		125J	Si	M1324
217	QJ114H1	800	30	35A	400	10m	100A	SiΔ	M1327a
218	QJ116H1	800	30	35A	400	10m	100A	SiΔ	M1334
219	30HB800*	800	30	50C	400	60	150	Si	C218a
220	NBS30-800	800	30	55C	400			Si	C224e

SYMBOLS AND CODES EXPLAINED IN INTERPRETER

8. STANDARD RECOVERY BRIDGE RECTIFIERS - Single Phase (Cont'd)

IN ORDER OF: (1) IO MAX (2) PIV (3) @ TEMP & (4) TYPE NUMBER

LINE No.	4 TYPE NUMBER	2 PIV (V)	MAX AVG FWD DC CURRENT 1 Io MAX (A)	3 @ TEMP (°C)	MAX RATING SURGE CURR PEAK 1 Cy (A)	PULSE WIDTH (s)	MAX. TEMP (°C)	MAT	DRAWING No.
1	SDA990-8	800	30	55C	300		175J	Si	C189d
2	VK848*	800	30	80C	300	8.3m	175J	Si	M1091
3	NBS30-1000	1.0k	30	55C	400			Si	C224e
4	SDA990-10	1.0k	30	55C	300		175J	Si	C189d
5	VK1048*	1.0k	30	80C	300	8.3m	175J	Si	M1091
6	SCBK2F*	200	32	55C	375		150	Si	M1040
7	SCBK4F*	400	32	55C	375		150	Si	M1040
8	SKB50-08A3*	800	34	45A	600	10m	150J	Si	M1068
9▼	SRM35F	50	35					Si	
10	CTN3505	50	35	50	400		125A	Si	M1256
11	CTP3505	50	35	50A	400		125A	Si	M1256
12	802-1	50	35	55C	250	8.3m	150	Si	C218f
13	BRS35-005	50	35	55C	400	8.3m	125A	Si	C189
14▼	DB3500T	50	35	55A	400	16m	125	Si	M1306
15▼	DB3500W	50	35	55A	400	16m	125	Si	M1230
16	GIB3500	50	35	55C	400	8.3m	175J	Si	M1283a
17	KBPC35-005*	50	35	55C	400		175S	Si	C224b
18	MDA3500	50	35	55C	400		175J	Si	C230b
19	MDA3550	50	35	55C	400		175J	Si	C230
20	RGIB3500	50	35	55C	300	8.3m	175J	Si	M1283b
21	BR3505	50	35.0	80.C	400	8.0m	150S	Si	C224b
22	BR3505F	50	35	80A	400		125A	Si	C224d
23	BR3505G	50	35	80A	400		125A	Si	C224d
24	CSB3505	50	35.0	80C	400		150A	Si	M1017
25▼	MB3505	50	35	80	400	8.3	125	Si	M1349
26	SB3505	50	35	80H	400			Si	M1342
27	E49B30-25-30	75	35		375		175J	Si	M1222
28▼	SRM35A	100	35					Si	
29	CTN351	100	35	50	400		125A	Si	M1256
30	CTP351	100	35	50A	400		125A	Si	M1256
31	802-2	100	35	55C	250	8.3m	150	Si	C218f
32	BRS35-01	100	35	55C	400	8.3m	125A	Si	C189
33▼	DB3501T	100	35	55A	400	16m	125	Si	M1306
34▼	DB3501W	100	35	55A	400	16m	125	Si	M1230
35	GIB3501	100	35	55C	400	8.3m	175J	Si	M1283a
36	KBPC35-01	100	35	55C	400	8.3m	125J	Si	C224b
37	MDA3501	100	35	55C	400		175J	Si	C230b
38	MDA3551	100	35	55C	400		175J	Si	C230
39	RGIB3501	100	35	55C	300	8.3m	175J	Si	M1283b
40	BR351	100	35.0	80.C	400	8.0m	150S	Si	C224b
41	BR351F	100	35	80A	400		125A	Si	C224d
42	BR351G	100	35	80A	400		125A	Si	C224d
43	CSB351	100	35.0	80C	400		150A	Si	M1017
44▼	MB351	100	35	80	400	8.3	125	Si	M1349
45	SB351	100	35	80H	400			Si	M1342
46	802-3	125	35	55C	250	8.3m	150	Si	C218f
47	E49B60-52-30	150	35		375		175J	Si	M1222
48	802-4	150	35	55C	250	8.3m	150	Si	C218f
49▼	SRM35B	200	35					Si	
50	CTN352	200	35	50	400		125A	Si	M1256
51	CTP352	200	35	50A	400		125A	Si	M1256
52	BRS35-02	200	35	55C	400	8.3m	125A	Si	C189
53▼	DB3502T	200	35	55A	400	16m	125	Si	M1306
54▼	DB3502W	200	35	55A	400	16m	125	Si	M1230
55	GIB3502	200	35	55C	400	8.3m	175J	Si	M1283a
56	KBPC35-02*	200	35	55C	400		175S	Si	C224b
57	MDA3502	200	35	55C	400		175J	Si	C230b
58	RGIB3502	200	35	55C	300	8.3m	175J	Si	M1283b
59	BR352	200	35.0	80C	400	8.0m	150S	Si	C224b
60	BR352F	200	35	80A	400		125A	Si	C224d
61	BR352G	200	35	80A	400		125A	Si	C224d
62	CSB352	200	35.0	80C	400		150A	Si	M1017
63▼	MB352	200	35	80	400	8.3	125	Si	M1349
64	SB352	200	35	80H	400			Si	M1342
65	E49B125-110-30	300	35		375		175J	Si	M1222
66▼	SRM35D	400	35					Si	
67	CTN354	400	35	50	400		125A	Si	M1256
68	CTP354	400	35	50A	400		125A	Si	M1256
69	BRS35-04	400	35	55C	400	8.3m	125A	Si	C189
70▼	DB3504T	400	35	55A	400	16m	125	Si	M1306
71▼	DB3504W	400	35	55A	400	16m	125	Si	M1230
72	GIB3504	400	35	55C	400	8.3m	175J	Si	M1283a
73	KBPC35-04*	400	35	55C	400		175S	Si	C224b
74	MDA3504	400	35	55C	400		175J	Si	C230b
75	RGIB3504	400	35	55C	300	8.3m	175J	Si	M1283b
76	BR354	400	35.0	80C	400	8.0m	150S	Si	C224b
77	BR354F	400	35	80A	400		125A	Si	C224d
78	BR354G	400	35	80A	400		125A	Si	C224d
79	CSB354	400	35.0	80C	400		150A	Si	M1017
80♦	MB354	400	35	80	400	8.3	125		M1349
81	SB354	400	35	80H	400			Si	M1342
82▼	SRM35M	600	35					Si	
83	CTN356	600	35	50	400		125A	Si	M1256
84	CTP356	600	35	50A	400		125A	Si	M1256
85	BRS35-06	600	35	55C	400	8.3m	125A	Si	C189
86▼	DB3506T	600	35	55A	400	16m	125	Si	M1306
87▼	DB3506W	600	35	55A	400	16m	125	Si	M1230
88	GIB3506	600	35	55C	400	8.3m	175J	Si	M1283a
89	KBPC35-06*	600	35	55C	400		175S	Si	C224b
90	MDA3506	600	35	55C	400		175J	Si	C230b
91	RGIB3506	600	35	55C	300	8.3m	175J	Si	M1283b
92	BR356	600	35.0	80C	400	8.0m	150S	Si	C224b
93	BR356F	600	35	80A	400		125A	Si	C224d
94	BR356G	600	35	80A	400		125A	Si	C224d
95	CSB356	600	35.0	80C	400		150A	Si	M1017
96♦	MB356	600	35	80	400	8.3	125		M1349
97	SB356	600	35	80H	400			Si	M1342
98	E49B250-225-30	700	35		375		175J	Si	M1222
99	CTN358	800	35	50	400		125A	Si	M1256
100	CTP358	800	35	50A	400		125A	Si	M1256
101	BRS35-08	800	35	55C	400	8.3m	125A	Si	C189
102▼	DB3508T	800	35	55A	400	16m	125	Si	M1306
103▼	DB3508W	800	35	55A	400	16m	125	Si	M1230
104	GIB3508	800	35	55C	400	8.3m	175J	Si	M1283a
105	KBPC35-08*	800	35	55C	400		175S	Si	C224b
106	MDA3508	800	35	55C	400		175J	Si	C230b
107	BR358	800	35.0	80C	400	8.0m	150S	Si	C224b
108	BR358F	800	35	80A	400		125A	Si	C224d
109	BR358G	800	35	80A	400		125A	Si	C224d
110	CSB358	800	35.0	80C	400		150A	Si	M1017
111♦	MB358	800	35	80	400	8.3	125		M1349
112	CTN3510	1.0k	35	50	400		125A	Si	M1256
113	CTP3510	1.0k	35	50A	400		125A	Si	M1256
114▼	DB3510T	1.0k	35	55A	400	16m	125	Si	M1306
115▼	DB3510W	1.0k	35	55A	400	16m	125	Si	M1230
116	GIB3510	1.0k	35	55C	400	8.3m	175J	Si	M1283a
117	KBPC35-10*	1.0k	35	55C	400		175S	Si	C224b
118	MDA3510	1.0k	35	55C	400		175J	Si	C230b
119	BR3510	1.0k	35.0	80C	400	8.0m	150S	Si	C224b
120	BR3510F	1.0k	35	80A	400		125A	Si	C224d
121	BR3510G	1.0k	35	80A	400		125A	Si	C224d
122♦	MB3510	1.0k	35	80	400	8.3	125		M1349
123	E49B380-340-30	1.1k	35		375		175J	Si	M1222
124	E49A-B380-340-30	1.2k	35		375		175J	Si	M1222
125	E49B500-450-30	1.5k	35		375		175J	Si	M1222
126	E49A-B500-450-30	1.6k	35		375		175J	Si	M1222
127	FE13U	100	37	85C	800		125J	Si	M1288
128	FE14U	100	37	85C	800		125J	Si	M1288a
129	EFE13A	200	37	85C	800		125J	Si	M1151
130	EFE14A	200	37	85C	800		125J	Si	M1151
131	EFE15A	200	37	85C	800		125J	Si	M1151
132	EFE13B	400	37	85C	800		125J	Si	M1151
133	EFE14B	400	37	85C	800		125J	Si	M1151
134	EFE15B	400	37	85C	800		125J	Si	M1151
135	EFE13C	600	37	85C	800		125J	Si	M1151
136	EFE14C	600	37	85C	800		125J	Si	M1151
137	EFE15C	600	37	85C	800		125J	Si	M1151
138	EFE13D	800	37	85C	800		125J	Si	M1151
139	EFE14D	800	37	85C	800		125J	Si	M1151
140	EFE15D	800	37	85C	800		125J	Si	M1151
141	EFE13E	1.0k	37	85C	800		125J	Si	M1151
142	EFE14E	1.0k	37	85C	800		125J	Si	M1151
143	EFE15E	1.0k	37	85C	800		125J	Si	M1151
144	EFE13F	1.2k	37	85C	800		125J	Si	M1151
145	EFE14F	1.2k	37	85C	800		125J	Si	M1151
146	EFE15F	1.2k	37	85C	800		125J	Si	M1151
147	EFE13G	1.4k	37	85C	800		125J	Si	M1151
148	EFE14G	1.4k	37	85C	800		125J	Si	M1151
149	EFE15G	1.4k	37	85C	800		125J	Si	M1151
150	SCBK2*	200	38	55C	375		150	Si	M1040
151	SCBK6*	600	38	55C	375		150	Si	M1040
152	SDA234A	50	40	55C	600		125	Si	C218b
153	SDA234B	100	40	55C	600		125	Si	C218b
154	SDA234C	200	40	55C	600		125	Si	C218b
155	SDA234D	400	40	55C	600		125	Si	C218b
156	SDA234E	600	40	55C	600		125	Si	C218b
157	SDA234F	800	40	55C	600		125	Si	C218b
158	SDA234G	1.0k	40	55C	600		125	Si	C218b
159	VGB0492MY7	700	41	45A	600	10m		Si	C231c
160	VGB0493MY7	1.1k	41	45A	600	10m		Si	C231c
161	VGB0494MY7	1.6k	41	45A	600	10m		Si	C231c
162	SET111411	150	45	55C	150		175J	Si	M1269
163	SCC116BY	200	45	40A	400	10m	70A	Si△	M1335
164	SEC116BY	400	45	40A	400	10m	70A	Si△	M1335
165	SET111404	400	45	55C	150		175J	Si	M1269
166	SGC116BY	600	45	40A	400	10m	70A	Si△	M1335
167	SKB50-12A3*	1.2k	48	45A	600	10m	150J	Si	M1068
168	SKB50-16A3*	1.6k	48	45A	600	10m	150J	Si	M1068
169	VGB0502MY7	700	49	45A	800	10m		Si	C231c
170	VGB0503MY7	1.1k	49	45A	800	10m		Si	C231c
171	VGB0504MY7	1.6k	49	45A	800	10m		Si	C231c
172	FB5000	50	50	55C	150		125A	Si	M1341
173♦	SDA132A	50	50	55C	400	8.3m	125C	Si	C216k
174	FB5001	100	50	55C	150		125A	Si	M1341
175♦	SDA132B	100	50	55C	400	8.3m	125C	Si	C216k
176	FF13U	100	50	85C	1.0k		125J	Si	M1288
177	FF14U	100	50	85C	1.0k		125J	Si	M1288a
178	SCBAR15FF	150	50	55C	375		175J	Si	C231a
179	FB5002	200	50	55C	150		125A	Si	M1341
180	SCBH2*	200	50	55	125		150	Si	C216h
181	SCBH2F*	200	50	55	125		150	Si	C216h
182♦	SDA132C	200	50	55C	400	8.3m	125C	Si	C216k
183	EFF13A	200	50	85C	1.0k		125J	Si	M1151
184	EFF14A	200	50	85C	1.0k		125J	Si	M1151
185	EFF15A	200	50	85C	1.0k		125J	Si	M1151
186	HRSCBH4F	400	50		125		150	Si	C216h
187	FB5004	400	50	55C	150		125A	Si	M1341
188	SCBH4*	400	50	55	125		150	Si	C216h
189	SCBH4F*	400	50	55	125		150	Si	C216h
190♦	SDA132D	400	50	55C	400	8.3m	125C	Si	C216k
191	SCBAR4F*	400	50	75C	375		150	Si	C231a
192	EFF13B	400	50	85C	1.0k		125J	Si	M1151
193	EFF14B	400	50	85C	1.0k		125J	Si	M1151
194	EFF15B	400	50	85C	1.0k		125J	Si	M1151
195	HRSCBH6	600	50		125		150	Si	C216h
196	FB5006	600	50	55C	150		125A	Si	M1341
197	SCBH6*	600	50	55	125		150	Si	C216h
198♦	SDA132E	600	50	55C	400	8.3m	125C	Si	C216k
199	SCBAR6*	600	50	75C	375		150	Si	C231a
200	EFF13C	600	50	85C	1.0k		125J	Si	M1151
201	EFF14C	600	50	85C	1.0k		125J	Si	M1151
202	EFF15C	600	50	85C	1.0k		125J	Si	M1151
203♦	SDA132F	800	50	55C	400	8.3m	125C	Si	C216k
204	EFF13D	800	50	85C	1.0k		125J	Si	M1151
205	EFF14D	800	50	85C	1.0k		125J	Si	M1151
206	EFF15D	800	50	85C	1.0k		125J	Si	M1151
207♦	SDA132G	1.0k	50	55C	400	8.3m	125C	Si	C216k
208	SCBAR10*	1.0k	50	75C	375		150	Si	C231a
209	EFF13E	1.0k	50	85C	1.0k		125J	Si	M1151
210	EFF14E	1.0k	50	85C	1.0k		125J	Si	M1151
211	EFF15E	1.0k	50	85C	1.0k		125J	Si	M1151
212	EFF13F	1.2k	50	85C	1.0k		125J	Si	M1151
213	EFF14F	1.2k	50	85C	1.0k		125J	Si	M1151
214	EFF15F	1.2k	50	85C	1.0k		125J	Si	M1151

SYMBOLS AND CODES EXPLAINED IN INTERPRETER

8. STANDARD RECOVERY BRIDGE RECTIFIERS - Single Phase (Cont'd)

IN ORDER OF: (1) IO MAX (2) PIV (3) @ TEMP & (4) TYPE NUMBER

LINE No.	4 TYPE NUMBER	2 PIV (V)	MAX AVG FWD DC CURRENT 1 Io MAX (A)	3 @ TEMP (°C)	MAX RATING SURGE CURR PEAK 1 Cy (A)	PULSE WIDTH (s)	MAX. TEMP (°C)	MAT	DRAWING No.
1	EFF13G	1.4k	50	85C	1.0k		125J	Si	M1151
2	EFF14G	1.4k	50	85C	1.0k		125J	Si	M1151
3	EFF15G	1.4k	50	85C	1.0k		125J	Si	M1151
4	SCBA2F*	200	60	55	150		150	Si	C224d
5	HRSCBA4F	400	60		150		150	Si	C224d
6	VGB0101CAa	400	60	45A	2.8	10m		Si	M1078
7	SCBA4F*	400	60	55	150		150	Si	C224d
8	VGB0102CAa	700	60	45A	2.8	10m		Si	M1078
9▼	SDA263-1A	50	75	25	400	8.3m	175	Si	M1309
10▼	SDA263-1AF	50	75	25	400	8.3m	175	Si	M1309
11	NSS3078D	50	75	50A	35	4.0m	150	Si	C224e
12	NSS3078P	50	75	50A	35	4.0m	150	Si	C224e
13▼	SDA263-1B	100	75	25	400	8.3m	175	Si	M1309
14▼	SDA263-1BF	100	75	25	400	8.3m	175	Si	M1309
15	NSS3079D	100	75	50A	35	4.0m	150	Si	C224e
16	NSS3079P	100	75	50A	35	4.0m	150	Si	C224e
17	FG13U	100	75	85C	2.0k		125J	Si	M1288
18	FG14U	100	75	85C	2.0k		125J	Si	M1288a
19▼	SDA263-1C	200	75	25	400	8.3m	175	Si	M1309
20▼	SDA263-1CF	200	75	25	400	8.3m	175	Si	M1309
21	NSS3080D	200	75	50A	35	4.0m	150	Si	C224e
22	NSS3080P	200	75	50A	35	4.0m	150	Si	C224e
23	SCBA2*	200	75	55	150		150	Si	C224d
24	EFG13A	200	75	85C	2.0k		125J	Si	M1151
25	EFG14A	200	75	85C	2.0k		125J	Si	M1151
26	EFG15A	200	75	85C	2.0k		125J	Si	M1151
27	NSS3081D	300	75	50A	35	4.0m	150	Si	C224e
28	NSS3081P	300	75	50A	35	4.0m	150	Si	C224e
29▼	SDA263-1D	400	75	25	400	8.3m	175	Si	M1309
30▼	SDA263-1DF	400	75	25	400	8.3m	175	Si	M1309
31	NSS3082D	400	75	50A	35	4.0m	150	Si	C224e
32	NSS3082P	400	75	50A	35	4.0m	150	Si	C224e
33	SCBA4*	400	75	55	150		150	Si	C224d
34	EFG13B	400	75	85C	2.0k		125J	Si	M1151
35	EFG14B	400	75	85C	2.0k		125J	Si	M1151
36	EFG15B	400	75	85C	2.0k		125J	Si	M1151
37	NSS3083D	500	75	50A	35	4.0m	150	Si	C224e
38	NSS3083P	500	75	50A	35	4.0m	150	Si	C224e
39	HRSCBA6	600	75		150		150	Si	C224d
40	NSS3084D	600	75	50A	35	4.0m	150	Si	C224e
41	NSS3084P	600	75	50C	35	4.0m	150	Si	C224e
42	SCBA6*	600	75	55	150		150	Si	C224d
43	EFG13C	600	75	85C	2.0k		125J	Si	M1151
44	EFG14C	600	75	85C	2.0k		125J	Si	M1151
45	EFG15C	600	75	85C	2.0k		125J	Si	M1151
46	NSS3085D	800	75	50A	35	4.0m	150	Si	C224e
47	NSS3085P	800	75	50C	35	4.0m	150	Si	C224e
48	EFG13D	800	75	85C	2.0k		125J	Si	M1151
49	EFG14D	800	75	85C	2.0k		125J	Si	M1151
50	EFG15D	800	75	85C	2.0k		125J	Si	M1151
51	NSS3086D	1.0k	75	50A	35	4.0m	150	Si	C224e
52	NSS3086P	1.0k	75	50C	35	4.0m	150	Si	C224e
53	EFG13E	1.0k	75	85C	2.0k		125J	Si	M1151
54	EFG14E	1.0k	75	85C	2.0k		125J	Si	M1151
55	EFG15E	1.0k	75	85C	2.0k		125J	Si	M1151
56	EFG13F	1.2k	75	85C	2.0k		125J	Si	M1151
57	EFG14F	1.2k	75	85C	2.0k		125J	Si	M1151
58	EFG15F	1.2k	75	85C	2.0k		125J	Si	M1151
59	EFG13G	1.4k	75	85C	2.0k		125J	Si	M1151
60	EFG14G	1.4k	75	85C	2.0k		125J	Si	M1151
61	EFG15G	1.4k	75	85C	2.0k		125J	Si	M1151
62	E2106B40C5000-3300		100		250	10m		Si	M1219b
63	E2112B80C5000-3300		190		250	10m		Si	M1219b
64	C2212B80C3700-2200	1	190		100	10m		Si	M1219c
65	C2220B125C3700-2200		300		100	10m		Si	M1219c
66	E2220B125C5000-3300		300		250	10m		Si	M1219b
67	E2240B250C5000-3300		600		250	10m		Si	M1219b
68	VGB0491MY7	400	600	45A	41	10m		Si	C231c
69	VGB0501MY7	400	800	45A	49	10m		Si	C231c

STD RECOVERY BRIDGE RECTIFIER: 3-∅

LINE No.	4 TYPE NUMBER	2 PIV (V)	MAX AVG FWD DC CURRENT 1 Io MAX (A)	3 @ TEMP (°C)	MAX RATING SURGE CURR PEAK 1 Cy (A)	PULSE WIDTH (s)	MAX. TEMP (°C)	MAT	DRAWING No.
73	S3BR25F	2.5k	0.36	55	10		175J	Si	M1041a
74♦	SDA294H	1.5k	0.5	55C	2.5	8.3m	150	Si	M1171
75	S3BR20*	2.0k	500m	55	2.5		150	Si	M1041
76♦	SDA294J	2.0k	0.5	55C	2.5	8.3m	150	Si	M1171
77♦	SDA294K	2.5k	0.5	55C	2.5	8.3m	150	Si	M1171
78♦	SDA294L	3.0k	0.5	55C	2.5	8.3m	150	Si	M1171
79	S3BR15FF	150	1.0	55C	35		175J	Si	M1041a
80	S3BR4F	400	1.0	55C	25		175J	Si	M1041a
81	UGB6124AG	10k	1.0	45A	45	10m		Si	M1075e
82	S3BR10*	1.0k	1.5	55	50		150	Si	M1041
83♦	SDA294A	50	2.0	55C	10	8.3m	150	Si	M1171
84♦	SDA294B	100	2.0	55C	10	8.3m	150	Si	M1171
85♦	SDA294C	200	2.0	55C	10	8.3m	150	Si	M1171
86	S3BR4*	400	2.0	55	50		150	Si	M1041
87♦	SDA294D	400	2.0	55C	10	8.3m	150	Si	M1171
88♦	SDA294E	600	2.0	55C	10	8.3m	150	Si	M1171
89♦	SDA294F	800	2.0	55C	10	8.3m	150	Si	M1171
90♦	SDA294G	1.0k	2.0	55C	10	8.3m	150	Si	M1171
91	S6A305HE	50	2.5	25A	60		150	Si	M1241
92	S6A310HE	100	2.5	25A	60		150	Si	M1241
93	700-1	100	2.5	55A	25	8.3m	150	Si	M1171
94	S6A315HE	150	2.5	25A	60		150	Si	M1241
95	700-2	200	2.5	55A	25	8.3m	150	Si	M1171
96	700-3	300	2.5	55A	25	8.3m	150	Si	M1171
97	700-4	400	2.5	55A	25	8.3m	150	Si	M1171
98	700-5	500	2.5	55A	25	8.3m	150	Si	M1171
99	700-6	600	2.5	55A	25	8.3m	150	Si	M1171
100	SKD25-02*	200	3.5	45A	350	8.3m	150J	Si	M1069
101	S6A360	600	4.0	100C	15		150A	Si	M1241
102	S6A305FR*	50	5.0	55C	25		150	Si	M1044
103	SC3BJ05F*	50	5.0	55C	9.0		150	Si	M1044
104	S6A310FR*	100	5.0	55C	25		150	Si	M1044
105	S6A320FR*	200	5.0	55C	25		150	Si	M1044
106	S6A340FR*	400	5.0	55C	25		150	Si	M1044
107	S6A360FR*	600	5.0	55C	25		150	Si	M1044
108	S6A320*	200	5.5	55C	50		150	Si	M1044
109	S6A340*	400	5.5	55C	50		150	Si	M1044
110	S6A380*	800	5.5	55C	50		150	Si	M1044
111	S6A3100*	1.0k	5.5	55C	50		150	Si	M1044
112	SL6320FR*	200	6.0	55C	25		150	Si	C233
113	SL6340FR*	400	6.0	55C	25		150	Si	C233
114	SL6360FR*	600	6.0	55C	25		150	Si	C233
115	SKD30-02A1*	200	6.5	45A	320	10m	150J	Si	M1070
116	SKD30-04A1*	400	6.5	45A	320	10m	150J	Si	M1070
117	SKD30-08A1*	800	6.5	45A	320	10m	150J	Si	M1070
118	SKD30-12A1*	1.2k	6.5	45A	320	10m	150J	Si	M1070
119	SKD30-16A1*	1.6k	6.5	45A	320	10m	150J	Si	M1070
120	SL6320*	200	7.5	55C	50		150	Si	C233
121	SL6340*	400	7.5	55C	50		150	Si	C233
122	SL6360*	600	7.5	55C	50		150	Si	C233
123	SL6380*	800	7.5	55C	50		150	Si	C233
124	SC3BJ2F	200	9.0		25			Si	M1044
125	SC3BJ4F	400	9.0	55C	25		175J	Si	M1044
126	S10A305FR*	50	9.5	55C	125		150	Si	M1043
127	S10A310FR*	100	9.5	55C	125		150	Si	M1043
128	SC3BH1F*	100	9.5	55C	125		150	Si	M1043
129	S10A320FR*	200	9.5	55C	125		150	Si	M1043
130	S10A340FR*	400	9.5	55C	125		150	Si	M1043
131	S10A360FR*	600	9.5	55C	125		150	Si	M1043
132♦	SDA312A	50	10	55C	125	8.3m	150	Si	M1043
133♦	SDA312B	100	10	55C	125	8.3m	150	Si	M1043
134	SKD50-02A3*	200	10	45A	660	8.3m	150J	Si	M1071
135♦	SDA312C	200	10	55C	125	8.3m	150	Si	M1043
136♦	SDA312D	400	10	55C	125	8.3m	150	Si	M1043
137♦	SDA312E	600	10	55C	125	8.3m	150	Si	M1043
138	S10A320*	200	11	55C	125		150	Si	M1043
139	S10A340*	400	11	55C	125		150	Si	M1043
140	S10A360*	600	11	55C	125		150	Si	M1043
141	S10A380*	800	11	55C	125		150	Si	M1043
142	S10A3100*	1.0k	11	55C	125		150	Si	M1043
143	SKD25-04*	400	12	45A	350	8.3m	150J	Si	M1069
144	S50A305FR	50	12.5	25A	375		150	Si	M1045
145	S50A310	100	12.5	25A	375		150	Si	M1045
146	S50A310FR	100	12.5	25A	375		150	Si	M1045
147	S50A320	200	12.5	25A	375		150	Si	M1045
148	S50A320FR	200	12.5	25A	375		150	Si	M1045
149	S50A340	400	12.5	25A	375		150	Si	M1045
150	S50A340FR	400	12.5	25A	375		150	Si	M1045
151	S50A360	600	12.5	25A	375		150	Si	M1045
152	S50A360FR	600	12.5	25A	375		150	Si	M1045
153	S50A380	800	12.5	25A	375		150	Si	M1045
154	S50A3100	1.0k	12.5	25A	375		150	Si	M1045
155	SC3BA05F*	50	14	55C	150		150	Si	C232a
156	SC3BA1F*	100	14	55C	150		150	Si	C232a
157	695-1	100	15	55C	80	8.3m	150	Si	C232
158	S15A310*	100	15	55C	125		150	Si	C232a
159	S15A310FR*	100	15	55C	100		150	Si	C232a
160	695-2	200	15	55C	80	8.3m	150	Si	C232
161	S15A320*	200	15	55C	125		150	Si	C232a
162	S15A320FR*	200	15	55C	100		150	Si	C232a
163	SC3BJ2*	200	15	55C	50		150	Si	M1044
164	SL15320*	200	15	55C	100		150	Si	C233a
165	SL15320FR*	200	15	55C	100		150	Si	C233a
166	695-3	300	15	55C	80	8.3m	150	Si	C232
167	695-4	400	15	55C	80	8.3m	150	Si	C232
168	S15A340*	400	15	55C	125		150	Si	C232a
169	S15A340FR*	400	15	55C	100		150	Si	C232a
170	SC3BJ4*	400	15	55C	50		150	Si	M1044
171	SL15340*	400	15	55C	100		150	Si	C233a
172	SL15340FR*	400	15	55C	100		150	Si	C233a
173	S25A340FR	400	15	100C	60		150A	Si	M1242
174	695-5	500	15	55C	80	8.3m	150	Si	C232
175	SKD25-08*	600	15	45A	350	8.3m	150J	Si	M1069
176	695-6	600	15	55C	80	8.3m	150	Si	C232
177	S15A360*	600	15	55C	125		150	Si	C232a
178	S15A360FR*	600	15	55C	100		150	Si	C232a
179	SC3BJ6*	600	15	55C	50		150	Si	M1044†
180	SL15360*	600	15	55C	100		150	Si	C233a
181	SL15360FR*	600	15	55C	100		150	Si	C233a
182	S15A380*	800	15	55C	125		150	Si	C232a
183	SL15380	800	15	55C	100		150	Si	C233a
184	S15A3100*	1.0k	15	55C	125		150	Si	C232a
185	SC3BA10FF	100	16	55A	100		175J	Si	C232a
186	FC15U	100	17	85C	300		125J	Si	M1288b
187	FC15A	200	17	85C	300		125J	Si	M1288b
188	FC15B	400	17	85C	300		125J	Si	M1288b
189	FC15C	600	17	85C	300		125J	Si	M1288b
190	FC15D	800	17	85C	300		125J	Si	M1288b
191	FC15E	1.0k	17	85C	300		125J	Si	M1288b
192	FC15F	1.2k	17	85C	300		125J	Si	M1288b
193	FC15G	1.4k	17	85C	300		125J	Si	M1288b
194	SL30305HE	50	18	100C	65		150A	Si	M1244a
195	SL30310HE	100	18	100C	65		150A	Si	M1244a
196	SL30315HE	150	18	100C	65		150A	Si	M1244a
197	801-1	50	20	55C	125	8.3m	150	Si	C232
198	801-2	100	20	55C	125	8.3m	150	Si	C232
199	S25A310FR*	100	20	55C	125		150	Si	C232a
200	801-3	125	20	55C	125	8.3m	150	Si	C232
201	801-4	150	20	55C	125	8.3m	150	Si	C232
202	S25A320FR*	200	20	55C	125		150	Si	C232a
203	S25A340	400	20	55C	125		150	Si	C232a
204	RM10TA-M	400	20	107C	350 §	8.3m	150J	Si	M1186
205	801-5	500	20	55C	125	8.3m	150	Si	C232
206	801-6	600	20	55C	125	8.3m	150	Si	C232
207	S25A360FR*	600	20	55C	125		150	Si	C232a
208	SKD25-12*	800	20	45A	350	8.3m	150J	Si	M1069
209	RM10TA-H	800	20	107C	350 §	8.3m	150J	Si	M1186
210	SKD50-04A3*	400	22	45A	660	8.3m	150J	Si	M1071
211	SL303100	1.0k	22	100C	75		150A	Si	M1244a
212	SL30320FR*	200	22.5	55C	125		150	Si	C233a
213	SL30340FR*	400	22.5	55C	125		150	Si	C233a
214	SL30360FR*	600	22.5	55C	125		150	Si	C233a

SYMBOLS AND CODES EXPLAINED IN INTERPRETER

8. STANDARD RECOVERY BRIDGE RECTIFIERS - Single Phase (Cont'd)

IN ORDER OF: (1) IO MAX (2) PIV (3) @ TEMP & (4) TYPE NUMBER

LINE No.	4 TYPE NUMBER	2 PIV (V)	MAX AVG FWD DC CURRENT 1 Io MAX (A)	3 @ TEMP (°C)	MAX RATING SURGE CURR PEAK 1 Cy (A)	PULSE WIDTH (s)	MAX. TEMP (°C)	MAT	DRAWING No.
1	H768-0	50	25		300			Si	M1186a
2♦	SDA167A	50	25	55C	200	8.3m	125	Si	C232a
3	H768-1	100	25		300			Si	M1186a
4	678-1	100	25	55C	150	8.3m	150	Si	C232
5	S25A310*	100	25	55C	150		150	Si	C232a
6♦	SDA167B	100	25	55C	200	8.3m	125	Si	C232a
7	FD15U	100	25	85C	400		125J	Si	M1288b
8	H768-2	200	25		300			Si	M1186a
9	678-2	200	25	55C	150	8.3m	150	Si	C232
10	S25A320*	200	25	55C	150		150	Si	C232a
11	SC3BH2F*	200	25	55C	125		150	Si	M1043
12♦	SDA167C	200	25	55C	200	8.3m	125	Si	C232a
13	FD15A	200	25	85C	400		125J	Si	M1288b
14	H768-3	300	25		300			Si	M1186a
15	678-3	300	25	55C	150	8.3m	150	Si	C232
16	H768-4	400	25		300			Si	M1186a
17	678-4	400	25	55C	150	8.3m	150	Si	C232
18	SC3BH4F*	400	25	55C	150		150	Si	M1044†
19♦	SDA167D	400	25	55C	200	8.3m	125	Si	C232a
20	FD15B	400	25	85C	400		125J	Si	M1288b
21	678-5	500	25	55C	150	8.3m	150	Si	C232
22	H768-6	600	25		300			Si	M1186a
23	678-6	600	25	55C	150	8.3m	150	Si	C232
24	S25A360*	600	25	55C	150		150	Si	C232a
25♦	SDA167E	600	25	55C	200	8.3m	125	Si	C232a
26	FD15C	600	25	85C	400		125J	Si	M1288b
27	H768-8	800	25		300			Si	M1186a
28	S25A380*	800	25	55C	150		150	Si	C232a
29♦	SDA167F	800	25	55C	200	8.3m	125	Si	C232a
30	FD15D	800	25	85C	400		125J	Si	M1288b
31	S25A3100*	1.0k	25	55C	150		150	Si	C232a
32♦	SDA167G	1.0k	25	55C	200	8.3m	125	Si	C232a
33	FD15E	1.0k	25	85C	400		125J	Si	M1288b
34	FD15F	1.2k	25	85C	400		125J	Si	M1288b
35	FD15G	1.4k	25	85C	400		125J	Si	M1288b
36	SC3BH2*	200	30	55C	125		150	Si	M1043
37	SL30320	200	30	55C	150		150	Si	C233a
38	SC3BH4*	400	30	55C	125		150	Si	M1043
39	SL30340*	400	30	55C	150		150	Si	C233a
40	RM15TA-M	400	30	103C	400 §	8.3m	150J	Si	M1186
41	SC3BH6*	600	30	55C	150		150	Si	M1044†
42	SL30360*	600	30	55C	150		150	Si	C233a
43	SL30380*	800	30	55C	150		150	Si	C233a
44	RM15TA-H	800	30	103C	400 §	8.3m	150J	Si	M1186
45	SC3BK4F*	400	33	55C	375		150	Si	M1045
46	E50DB30-38-40	75	35		375		175J	Si	M1222a
47	E50DB60-78-40	150	35		375		175J	Si	M1222a
48	B481A2	200	35	75B	400	8.3m	125A	Si	M1150
49	B482A2	200	35	75B	400	8.3m	125A	Si	M1150
50	E50DB125-165-40	300	35		375		175J	Si	M1222a
51	B481B2	400	35	75B	400	8.3m	125A	Si	M1150
52	B482B2	400	35	75B	400	8.3m	125A	Si	M1150
53	B481C2	600	35	75B	400	8.3m	125A	Si	M1150
54	B482C2	600	35	75B	400	8.3m	125A	Si	M1150
55	E50DB250-330-40	700	35		375		175J	Si	M1222a
56	B481D2	800	35	75B	400	8.3m	125A	Si	M1150
57	B482D2	800	35	75B	400	8.3m	125A	Si	M1150
58	B481E2	1.0k	35	75B	400	8.3m	125A	Si	M1150
59	B482E2	1.0k	35	75B	400	8.3m	125A	Si	M1150
60	E50DB380-500-40	1.1k	35		375		175J	Si	M1222a
61	E50A-DB380-500-40	1.2k	35		375		175J	Si	M1222a
62	B481F2	1.2k	35	75B	400	8.3m	125A	Si	M1150
63	B482F2	1.2k	35	75B	400	8.3m	125A	Si	M1150
64	E50DB500-670-40	1.5k	35		375		175J	Si	M1222a
65	E50A-DB500-670-40	1.6k	35		375		175J	Si	M1222a
66	FE15U	100	37	85C	800		125J	Si	M1288b
67	800-1	50	40	55C	250	8.3m	150	Si	C232
68	800-2	100	40	55C	250	8.3m	150	Si	C232
69	800-3	125	40	55C	250	8.3m	150	Si	C232
70	800-4	150	40	55C	250	8.3m	150	Si	C232
71	SC3BA2F*	200	40	55C	150		150	Si	C232a
72	SC3BA4F*	400	40	55C	150		150	Si	M1044†
73	SC3BK4*	400	40	55C	375		150	Si	M1045
74	800-5	500	40	55C	250	8.3m	150	Si	C232
75	800-6	600	40	55C	250	8.3m	150	Si	C232
76	SC3BK6*	600	40	55C	375		150	Si	M1045
77	SKD50-08A3*	800	40	45A	660	8.3m	150J	Si	M1071
78	FF15U	100	50	85C	1.0k		125J	Si	M1288b
79	SC3BA2*	200	50	55C	150		150	Si	C232a
80	SC3BA4*	400	50	55C	150		150	Si	C232a
81	B485B2	400	50	75B	400	8.3m	125	Si	M1150
82	SC3BA6*	600	50	55C	150		150	Si	M1044†
83	B485C2	600	50	75B	400	8.3m	125	Si	M1150
84	B485D2	800	50	75B	400	8.3m	125	Si	M1150
85	RM30TA-M	400	60	90C	1.0k§	8.3m	125J	Si	M1187
86	RM30TA-H	800	60	90C	1.0k§	8.3m	125J	Si	M1187
87	SKD50-12A3*	1.2k	60	45A	660	8.3m	150J	Si	M1071
88	SKD50-16A3*	1.6k	60	45A	660	8.3m	150J	Si	M1071
89▼	SDA263-3A	50	75	25	400	8.3m	175	Si	M1045
90▼	SDA263-3AF	50	75	25	400	8.3m	175	Si	M1045
91▼	SDA263-3AUF	50	75	25	400	8.3m	175	Si	M1045
92	SDA263AF3	50	75	50C	375		150	Si	M1045
93▼	SDA263-3B	100	75	25	400	8.3m	175	Si	M1045
94▼	SDA263-3BF	100	75	25	400	8.3m	175	Si	M1045
95▼	SDA263-3BUF	100	75	25	400	8.3m	175	Si	M1045
96	SDA263BF3	100	75	50C	375		150	Si	M1045
97	FG15U	100	75	85C	2.0k		125J	Si	M1288b
98▼	SDA263-3C	200	75	25	400	8.3m	175	Si	M1045
99▼	SDA263-3CF	200	75	25	400	8.3m	175	Si	M1045
100▼	SDA263-3CUF	200	75	25	400	8.3m	175	Si	M1045
101	SDA263CF3	200	75	50C	375		150	Si	M1045
102▼	SDA263-3D	400	75	25	400	8.3m	175	Si	M1045
103▼	SDA263-3DF	400	75	25	400	8.3m	175	Si	M1045
104▼	SDA263-3DUF	400	75	25	400	8.3m	175	Si	M1045
105	SDA263DF3	400	75	50C	375		150	Si	M1045

SYMBOLS AND CODES EXPLAINED IN INTERPRETER

IN ORDER OF: (1) IO MAX (2) PIV (3) @ TEMP & (4) TYPE NUMBER

SCHOTTKY RECTIFIER: SINGLE

LINE No.	4 TYPE NUMBER	2 PIV (V)	MAX AVG FWD DC CURRENT 1 Io MAX (A)	3 @ TEMP (°C)	MAX RATING SURGE CURR PEAK 1 Cy (A)	PULSE WIDTH (s)	MAX. TEMP (°C)	MAT	DRAWING NUMBER
7▼	1SS228	3.0	30m	25A			100J	Si	A277s
8▼	1SS274	3.0	30m	25A			125J	Si	A277s
9▼	1SS275	3.0	30m	25A			125J	Si	A277s
10▼	1SS276	3.0	30m	25A			125J	Si	A277s
11♦	LL104B	5.0	30m	25A			150J	Si	F135
12♦	LL104D	5.0	30m	25A			150J	Si	F135
13♦	LL104F	5.0	30m	25A			150J	Si	F135
14♦	LL104A	10	30m	25A			150J	Si	F135
15♦	LL104C	10	30m	25A			150J	Si	F135
16♦	LL104E	10	30m	25A			150J	Si	F135
17▼	HSC11	4.0	50m	25A	150m		100J	Si	A411
18	MBR030	30	500m	75L	5.0	8.3m	150J	Si♦	DO35
19	MBRL030	30	0.5	75C	5.0		150J	Si♦	F140
20	MBR040	40	500m	75L	5.0	8.3m	150J	Si♦	DO35
21	MBRL040	40	0.5	75C	5.0		150J	Si♦	F140
22	MBR115P	15	1.0	90L	25	16m	150J	Si♦	A298v
23	VSK120	20	1.0	25A	40		150J	Si♦	A298p
24	BYV10-20A	20	1.0	60A	25	10m	125J	Si♦	DO41
25	SB120	20	1.0	75L	40	8.3m	150	Si♦	DO41
26	SB120-11	20	1.0	75C	40	8.3m	125J	Si♦	DO15
27	SR102	20	1.0	75L	40		150	Si♦	DO41
28	1N5817	20	1.0	90L	25 §		125A	Si♦	A1wu
29	USD1120(M)	20	1.0	90L	50		150J	Si♦	A383
30	SSH1A020	20	1.0	125J	100		175L	Si♦	A1ty
31	VSK130	30	1.0	25A	40		150J	Si♦	A298p
32	11DQ03	30	1.0	32A	40	6.0m	125J	Si♦	M1008a
33	E10QS03	30	1.0	36A	20	10m	125J	Si♦	M1008a
34	SR103	30	1.0	40A	40		175A	Si♦	DO41
35	SB130	30	1.0	75L	40	8.3m	150	Si♦	DO41
36	1N5818	30	1.0	90L	25 §		125A	Si♦	A1wu
37	USD1130(M)	30	1.0	90L	50		150J	Si♦	A383
38	VSK140	40	1.0	25A	40		150J	Si♦	A298p
39	11DQ04	40	1.0	32A	40	6.0m	125J	Si♦	M1008a
40	E10QS04	40	1.0	36A	20	10m	125J	Si♦	M1008a
41	SB140	40	1.0	75L	40	8.3m	150	Si♦	DO41
42	SR104	40	1.0	75L	40		150	Si♦	DO41
43	1N5819	40	1.0	90L	100		125A	Si♦	A1wu
44	USD1140(M)	40	1.0	90L	50		150J	Si♦	A383
45	SSH1A040	40	1.0	125J	100		175L	Si♦	A1ty
46	ERA81-004	45	1.0	25A	50	10m	125J	Si♦	A427
47	11DQ05	50	1.0	12A	25	6.0m	125J	Si♦	M1008a
48	SR105	50	1.0	40A	40		175A	Si♦	DO41
49	SB150	50	1.0	75L	40	8.3m	150	Si♦	DO41
50	11DQ06	60	1.0	12A	25	6.0m	125J	Si♦	M1008a
51	BYV10-60	60	1.0	25A	20	10m	125J	Si♦	DO41
52	SB160	60	1.0	75L	40	8.3m	150	Si♦	DO41
53	SR106	60	1.0	100L	30		150	Si♦	DO41
54	SSH1A060	60	1.0	125J	100		175L	Si♦	A1ty
55	SB180	80	1.0	75L	40	8.3m	150	Si♦	DO41
56▼	SR108	80	1.0	100L	40	8.3m	150A	Si	DO41
57	SSH1A080	80	1.0	125J	100		175L	Si♦	A1ty
58▼	ERA84-009	90	1.0	90C	30	8.3m	125J	Si	TO220AB
59	11DQ10	100	1.0	57A	40	10m	125J	Si♦	M1008a
60	SSH1A100	100	1.0	125J	100		175L	Si♦	A1ty
61	SSH1A120	120	1.0	125J	100		175L	Si♦	A1ty
62	21DQ03	30	1.7	100A	80		125J	Si♦	A1aav
63	21DQ04	40	1.7	100A	85		125J	Si♦	A1aav
64	21DQ05	50	1.7	25A	45	10m	125J	Si♦	A1aav
65	21DQ06	60	1.7	25A	45	10m	125J	Si♦	A1aav
66	ERB81-004	45	2.0	25A	100	10m	125J	Si♦	A427a
67▼	ERB84-009	90	2.0	90C	60	8.3m	125J	Si	TO220AB
68	VSK320	20	3.0	25A	150		150J	Si♦	A298q
69	SR302	20	3.0	40A	120		175A	Si♦	DO27
70	SB320	20	3.0	75L	150	8.3m	150	Si♦	DO27A
71	1N5820	20	3.0	95L	80 §		125A	Si♦	A282
72	VSK330	30	3.0	25A	150		150J	Si♦	A298q
73	SR303	30	3.0	40A	120		175A	Si♦	DO27
74	SB330	30	3.0	75L	150	8.3m	150	Si♦	DO27A
75	31DQ03	30	3.0	85A	95		125J	Si♦	A1aax
76	1N5821	30	3.0	95L	80 §		125A	Si♦	A282
77	VSK340	40	3.0	25A	150		150J	Si♦	A298q
78	SR304	40	3.0	40A	120		175A	Si♦	DO27
79	SB340	40	3.0	75L	150	8.3m	150	Si♦	DO27A
80	31DQ04	40	3.0	85A	100		125J	Si♦	A1aax
81	1N5822	40	3.0	95L	250 §		125A	Si♦	A282
82	ERC81-004	45	3.0	25A	120	10m	125J	Si♦	A427b
83	SR305	50	3.0	40A	120		175A	Si♦	DO27
84	SB350	50	3.0	75L	150	8.3m	150	Si♦	DO27A
85	31DQ05	50	3.0	79A	60		125J	Si♦	A1aax
86	SR306	60	3.0	40A	120		175A	Si♦	DO27
87	SB360	60	3.0	75L	150	8.3m	150	Si♦	DO27A
88	31DQ06	60	3.0	79A	63		125J	Si♦	A1aax
89	SB380	80	3.0	75L	150	8.3m	150	Si♦	DO27A
90▼	SR308	80	3.0	100L	150	8.3m	150A	Si	DO27
91▼	ERC84-009	90	3.0	90C	80	8.3m	125J	Si	TO220AB
92▼	USD245	45	4.0	100C	80	8.3m	175J	Si	TO39
93	50SQ030	30	4.5	96C	270		150J	Si♦	A3ay
94	50SQ035	35	4.5	96C	270		150J	Si♦	A3ay
95	50SQ040	40	4.5	96C	270		150J	Si♦	A3ay
96	50SQ045	45	4.5	96C	270		150J	Si♦	A3ay
97	50SQ060	60	4.5	96C	270		150J	Si♦	A3ay
98	50SQ080	80	4.5	96C	270		150J	Si♦	A3ay
99	50SQ090	90	4.5	96C	270		150J	Si♦	A3ay
100	50SQ0100	100	4.5	96C	270		150J	Si♦	A3ay
101	VSK520	20	5.0	25A	250		150J	Si♦	A298q
102	SB520	20	5.0	60L	250	8.3m	150	Si♦	DO27A
103	SR502	20	5.0	60A	250		125A	Si♦	DO27
104	VSK530	30	5.0	25A	250		150J	Si♦	A298q
105	SB530	30	5.0	60L	250	8.3m	150	Si♦	DO27A
106	SR503	30	5.0	60A	250		125A	Si♦	DO27
107	5KQ30(B)	30	5.0	105C	120	10m	125J	Si♦	Y220AC
108	VSK540	40	5.0	25A	250		150J	Si♦	A298q
109	SB540	40	5.0	60L	250	8.3m	150	Si♦	DO27A
110	SR504	40	5.0	60A	250		125A	Si♦	DO27
111	ESAB82-004	40	5.0	100C	100		125J	Si♦	TO220
112	5KQ40(B)	40	5.0	105C	120	10m	125J	Si♦	Y220AC
113	SB550	50	5.0	60L	250	8.3m	150	Si♦	DO27A
114	SR505	50	5.0	60A	250		125A	Si♦	DO27
115	5KQ50(B)	50	5.0	102C	110	10m	125J	Si♦	Y220AC
116	SB560	60	5.0	60L	250	8.3m	150	Si♦	DO27A
117	SR506	60	5.0	60A	250		125A	Si♦	DO27
118	5KQ60(B)	60	5.0	102C	110	10m	125J	Si♦	Y220AC
119	SB580	80	5.0	60L	250	8.3m	150	Si♦	DO27A
120▼	SR508	80	5.0	85L	250	8.3m	150A	Si	DO27
121▼	ERC88-009	90	5.0	90C	80	8.3m	125J	Si	TO220AB
122▼	ESAB85-009	90	5.0	90C	60	8.3m	125J	Si	TO220AB
123	USD620(M)	20	6.0	115C	150	8.3m	150J	Si♦	M981
124	USD635(M)	35	6.0	115C	150	8.3m	150J	Si♦	M981
125	USD640(M)	40	6.0	115C	150	8.3m	150J	Si♦	M981
126	USD645(M)	40	6.0	115C	150	8.3m	150J	Si♦	M981
127	SR802	20	8.0	90A	250		125A	Si♦	TO220A
128	USD720(M)	20	8.0	115C	200	8.3m	150J	Si♦	M981
129	USD735(M)	20	8.0	115C	200	8.3m	150J	Si♦	M981
130	USD740(M)	20	8.0	115C	200	8.3m	150J	Si♦	M981
131	SR803	30	8.0	90A	250		125A	Si♦	TO220A
132	80SQ030	30	8.0	92L	380	6.0m	175J	Si♦	A3ap
133	80SQ035	35	8.0	92L	380	6.0m	175J	Si♦	A3aq
134	SR804	40	8.0	90A	250		125A	Si♦	TO220A
135	80SQ040	40	8.0	92L	380	6.0m	175J	Si♦	A3ap
136	80SQ045	45	8.0	92L	380	6.0m	175J	Si♦	A3ap
137	USD745(M)	45	8.0	115C	200	8.3m	150J	Si♦	M981
138	SR805	50	8.0	90A	250		125A	Si♦	TO220A
139	SR806	60	8.0	90A	250		125A	Si♦	TO220A
140▼	SR808	80	8.0	105C	250	8.3m	150A	Si	TO220A
141	SR1002	20	10	135A	150		125A	Si♦	TO220A
142	10TQ030	30	10	110C	260	6.0m	150J	Si♦	Y220c
143	SR1003	30	10	135A	150		125A	Si♦	TO220A
144	10TQ035	35	10	110C	260	6.0m	150J	Si♦	Y220c
145	10TQ040	40	10	110C	260	6.0m	150J	Si♦	Y220c
146	SR1004	40	10	135A	150		125A	Si♦	TO220A
147	ESAC82-004	45	10	95C	120		125J	Si♦	TO220
148	10TQ045	45	10	110C	260	6.0m	150J	Si♦	Y220c
149	SR1005	50	10	135A	150		125A	Si♦	TO220A
150	MBR1060	60	10	133C	150		150J	Si♦	Y220AC
151	SR1006	60	10	135A	150		125A	Si♦	TO220A
152▼	ESAC85-009	90	10	90C	80	8.3m	125J	Si	TO220AB
153	USD620C(M)	20	12	115C	150	8.3m	150J	Si♦	Y220AA*
154	12CTQ030	30	12	121C	135	6.0m	150J	Si♦	Y220b
155	USD635C(M)	35	12	115C	150	8.3m	150J	Si♦	Y220AA*
156	12CTQ035	35	12	121C	135	6.0m	150J	Si♦	Y220b
157	USD640C(M)	40	12	115C	150	8.3m	150J	Si♦	Y220AA*
158	12CTQ040	40	12	121C	135	6.0m	150J	Si♦	Y220b
159	USD645C(M)	45	12	115C	150	8.3m	150J	Si♦	Y220AA*
160	VSK1520	20	15	25A	300		150J	Si♦	S4a
161	1N5823	20	15	75C	500 §		125J	Si♦	A179c
162	MBR1520	20	15	80C	500	8.3m	125J	Si♦	DO4
163	1N5826	20	15	85C	500 §		125J	Si♦	S329
164▼	SR15D	20	15	90	500	8.3m	150A	Si	DO4
165	VSK1530	30	15	25A	300		150J	Si♦	S4a
166	1N5824	30	15	75C	500 §		125J	Si♦	A179c
167	MBR1530	30	15	80C	500	8.3m	125J	Si♦	DO4
168	1N5827	30	15	85C	500 §		125J	Si♦	S329
169▼	SR15F	30	15	90	500	8.3m	150A	Si	DO4
170	16KQ30(B)	30	15	100C	250	10m	125J	Si♦	M1251
171	16MQ30	30	15	100C	300	10m	125J	Si♦	S29e
172	30QHC030	30	15	115C	300		175J	Si♦	TO3
173	VSK1540	40	15	25A	300		150J	Si♦	S4a
174	1N5825	40	15	75C	500 §		125J	Si♦	A179c
175	MBR5825H1	40	15	75C	500		150J	Si♦	A179c
176	MBR5825H	40	15	75C	500		150J	Si♦	A179c
177	MBR1540	40	15	80C	500	8.3m	125J	Si♦	DO4
178	1N5828	40	15	85C	500 §		125J	Si♦	S329
179▼	SR15H	40	15	90	500	8.3m	150A	Si	DO4
180	16KQ40(B)	40	15	100C	250	10m	125J	Si♦	M1251
181	16MQ40	40	15	100C	300	10m	125J	Si♦	S29e
182	ERD81B004	40	15	100C	250		125J	Si♦	DO4
183	30QHC045	45	15	115C	300		175J	Si♦	TO3
184	16KQ50(B)	50	15	96C	200	10m	125J	Si♦	M1251
185	16MQ50	50	15	96C	200	10m	125J	Si♦	S29e
186	16KQ60(B)	60	15	96C	200	10m	125J	Si♦	M1251
187	16MQ60	60	15	96C	200	10m	125J	Si♦	S29e
188	SB1620	20	16	25A	250	8.3m	125J	Si♦	Y220a
189	SR1602	20	16	90A	250		125A	Si♦	TO220A
190	SBS1620	20	16	115C	30	8.3m	150J	Si♦	TO220A
191	USD720C(M)	20	16	115C	200	8.3m	150J	Si♦	Y220AA*
192	5S1S03	30	16		60	10m	125J	Si♦	M856
193	10S2S03	30	16		60	10m	125J	Si♦	TO66
194	SB1630	30	16	25A	250	8.3m	125J	Si♦	Y220a
195	SR1603	30	16	90A	250		125A	Si♦	TO220A
196	SBS1635	35	16	115C	30	8.3m	150J	Si♦	TO220A
197	USD735C(M)	35	16	115C	200	8.3m	150J	Si♦	Y220AA*
198	5S1S04	40	16		60	10m	125J	Si♦	M856
199	10S2S04	40	16		60	10m	125J	Si♦	TO66
200	SB1640	40	16	25A	250	8.3m	125J	Si♦	Y220a
201	SR1604	40	16	90A	250		125A	Si♦	TO220A
202	SBS1640	40	16	115C	30	8.3m	150J	Si♦	TO220A
203	USD740C(M)	40	16	115C	200	8.3m	150J	Si♦	Y220AA*
204	SBS1645	45	16	115C	30	8.3m	150J	Si♦	TO220A
205	USD745C(M)	45	16	115C	200	8.3m	150J	Si♦	Y220AA*
206	SB1650	50	16	25A	250	8.3m	125J	Si♦	Y220a
207	SR1605	50	16	90A	250		125A	Si♦	TO220A
208	SB1660	60	16	25A	250	8.3m	125J	Si♦	Y220a
209	SR1606	60	16	90A	250		125A	Si♦	TO220A
210	SB1680	80	16	25A	250	8.3m	125J	Si♦	Y220a
211▼	ESAC87-009	90	16	90C	100	8.3m	125J	Si	TO220AB
212	20FQ030	30	20	85C	800 §	8.3m	125J	Si♦	DO4
213	20FQ035	35	20	85C	800 §	8.3m	125J	Si♦	DO4
214	20FQ040	40	20	85C	800 §	8.3m	125J	Si♦	DO4
215	20FQ020	20	22	73	600		125J	Si♦	DO4
216	1N6391	45	22	25C	600		175J	Si♦	DO4
217	20FQ045	45	22	73	600		125J	Si♦	DO4
218	1N5829	20	25	85C	800 §		125J	Si♦	S329
219	1N5830	30	25	85C	800 §		125J	Si♦	S329
220	1N5831	40	25	85C	800 §		125J	Si♦	S329

SYMBOLS AND CODES EXPLAINED IN INTERPRETER

9. SCHOTTKY RECTIFIERS, POWER - Single Rectifier (Cont'd)

IN ORDER OF: (1) IO MAX (2) PIV (3) @ TEMP & (4) TYPE NUMBER

LINE No.	4 TYPE NUMBER	2 PIV (V)	MAX AVG FWD DC CURRENT 1 Io MAX (A)	3 @ TEMP (°C)	MAX RATING SURGE CURR PEAK 1 Cy (A)	PULSE WIDTH (s)	MAX. TEMP (°C)	MAT	DRAWING NUMBER
1	MBR5831H1	40	25	85C	800	8.3m	150J	Si♦	DO4
2	MBR5831H	40	25	85C	800	8.3m	150J	Si♦	DO4
3▼	ESAD85-009	90	25	90C	150	8.3m	125J	Si	TO220AB
4	SBS3020M	20	30		300	8.3m	125J	Si♦	TO3
5	SB3020	20	30	25A	300	8.3m	120J	Si♦	TO3
6	VSK3020S	20	30	25A	500	8.3m	150J	Si♦	E203a
7	SBS3030M	30	30		300	8.3m	125J	Si♦	TO3
8	SB3030	30	30	25A	300	8.3m	120J	Si♦	TO3
9	VSK3030S	30	30	25A	500	8.3m	150J	Si♦	E203a
10	21FQ030	30	30	90C	600		150J	Si♦	DO4
11	31MQ30	30	30	97C	500	10m	125J	Si♦	S14s
12	30FQ030	30	30	115C	600		175J	Si♦	E203a
13	SBR3035	35	30	132C	600	8.3m	175J	Si♦	D04
14	SBT3035	35	30	150C	600	8.3m	175J	Si♦	TO3
15	SBS3040M	40	30		300	8.3m	125J	Si♦	TO3
16	SB3040	40	30	25A	300	8.3m	120J	Si♦	TO3
17	VSK3040S	40	30	25A	500	8.3m	150J	Si♦	E203a
18	ESAD81-004A	40	30	90C	250		125J	Si♦	T03
19	31MQ40	40	30	97C	500	10m	125J	Si♦	S14s
20	ERE81B004	40	30	100C	400		125J	Si♦	DO4
21	SBR3040	40	30	132C	600	8.3m	175J	Si♦	D04
22	SBT3040	40	30	150C	600	8.3m	175J	Si♦	TO3
23	SSD41	45	30.0		600	8.3m	150	Si♦	DO4
24	VSK41	45	30	25A	600	8.3m	150J	Si♦	E203a
25	21FQ045	45	30	90C	600		150J	Si♦	DO4
26	SD4145	45	30	90C	600	8.3m	160J	Si♦	D04
27	SD24145	45	30	96C	400	8.3m	160J	Si♦	TO3
28	SD41	45	30	105C	600	8.3m	150J	Si♦	DO4
29	30FQ045	45	30	115C	600		175J	Si♦	E203a
30	SBR3045	45	30	132C	600	8.3m	175J	Si♦	D04
31	SBT3045	45	30	150C	600	8.3m	175J	Si♦	TO3
32	SBS3050M	50	30		300	8.3m	150J	Si♦	TO3
33	SB3050	50	30	25A	300	8.3m	120J	Si♦	TO3
34	SBR3050	50	30	132C	600	8.3m	175J	Si♦	D04
35	SBT3050	50	30	150C	600	8.3m	175J	Si♦	TO3
36	SBS3060M	60	30		300	8.3m	150J	Si♦	TO3
37	SB3060	60	30	25A	300	8.3m	120J	Si♦	TO3
38	SB3080	80	30	25A	300	8.3m	120J	Si♦	TO3
39	10S1S03	30	32		150	10m	125J	Si♦	M856
40	20S2S03	30	32		150	10m	125J	Si♦	TO3
41	10S1S04	40	32		150	10m	125J	Si♦	M856
42	20S2S04	40	32		150	10m	125J	Si♦	TO3
43	1N5832	20	40	75C	800 §		125J	Si♦	DO5
44	VSK4020	20	40	90A	500	8.3m	150J	Si♦	DO5
45	1N5833	30	40	75C	800 §		125J	Si♦	DO5
46	VSK4030	30	40	85A	500	8.3m	150J	Si♦	DO5
47	41MQ30	30	40	88C	600	10m	125J	Si♦	S14s
48	1N5834	40	40	75C	800 §		125J	Si♦	DO5
49	VSK4040	40	40	80A	500	8.3m	150J	Si♦	DO5
50	41MQ40	40	40	88C	600	10m	125J	Si♦	S14s
51	41MQ50	50	40	82C	500	10m	125J	Si♦	S14s
52	41MQ60	60	40	82C	500	10m	125J	Si♦	S14s
53	50HQ020	20	50	80C	800 §	8.3m	125J	Si♦	DO5
54	50HQ030	30	50	80C	800 §	8.3m	125J	Si♦	DO5
55	51HQ045	45 *	54	98C	800 §	8.3m	150J	Si♦	E203b
56	SSP6020	20	60		800	8.3m	175	Si♦	DO5
57	MBR6020	20	60	100C	800		175J	Si♦	DO5
58	MBR6020B	20	60	100C	800		150J	Si♦	S546
59	SSP6030	30	60		800	8.3m	175	Si♦	DO5
60	61MQ30	30	60	88C	800	10m	125J	Si♦	S14t
61	MBR6035	35	60	100C	800	8.3m	150J	Si♦	DO5
62	MBR6035B	35	60	100C	800	8.3m	150J	Si♦	DO5
63	MBR6035PF	35	60	100C	800	8.3m	150J	Si♦	DO21
64	SSP6040	40	60		800	8.3m	175	Si♦	DO5
65	61MQ40	40	60	86C	800	10m	125J	Si♦	S14t
66	VSK51	45	60	25J	800	8.3m	150J	Si♦	DO5
67	VSK51B	45	60	25J	800	8.3m	150J	Si♦	S512
68	PHSD51	45	60	90A	700	10m	150J	Si♦	DO5
69	S060HHOF	45	60	94C	800	8.3m	150J	Si♦	DO5
70	SD5145	45	60	94C	800	8.3m	175J	Si♦	DO5
71	MBR6045	45	60	100C	800	8.3m	150J	Si♦	DO5
72	MBR6045B	45	60	100C	800	8.3m	150J	Si♦	DO5
73	MBR6045H1	45	60	100C	800	8.3m	150J	Si♦	DO5
74	MBR6045H	45	60	100C	800	8.3m	150J	Si♦	DO5
75	MBR6045PF	45	60	100C	800	8.3m	150J	Si♦	DO21
76	VSK32	50	60	25	600		175J	Si♦	DO4
77	VSK232	50	60	25	600		175J	Si♦	TO3
78	61MQ50	50	60	82C	700	10m	125J	Si♦	S14t
79	VSK31	60	60	25	600		175J	Si♦	DO4
80	VSK231	60	60	25	600		175J	Si♦	TO3
81	61MQ60	60	60	82C	700	10m	125J	Si♦	S14t
82	20S1S03	30	63		250	10m	125J	Si♦	M856
83	20S1S04	40	63		250	10m	125J	Si♦	M856
84▼	SR65D	20	65	120C	800	8.3m	150A	Si	DO5
85▼	SR65F	30	65	120C	800	8.3m	150A	Si	DO5
86	MBR6535	35	65	120C	800	8.3m	175J	Si♦	DO5
87▼	SR65H	40	65	120C	800	8.3m	150A	Si	DO5
88	MBR6545	45	65	120C	800	8.3m	175J	Si♦	DO5
89▼	SR65K	50	65	120C	800	8.3m	150A	Si	DO5
90	MBR7520	20	70	90C	1.0k	8.3m	175J	Si♦	DO5
91	MBR7530	30	70	90C	1.0k	8.3m	175J	Si♦	DO5
92	MBR7535	35	70	90C	1.0k	8.3m	175J	Si♦	DO5
93	MBR7540	40	70	90C	1.0k	8.3m	175J	Si♦	DO5
94	MBR7545	45	70	90C	1.0k	8.3m	175J	Si♦	DO5
95	MBR7545H1	45	70	90C	1.0m		175J	Si♦	DO5
96	MBR7545H	45	70	90C	1.0m		175J	Si♦	DO5
97▼	SR75D	20	75	90C	1.0k	8.3m	150A	Si	DO5
98	SSH75A020	20	75	125C	1.0k		175C	Si♦	DO5
99▼	SR75F	30	75	90C	1.0k	8.3m	150A	Si	DO5
100	75HQ030	30	75	115C	1.0k	8.3m	175J	Si♦	E203b
101	SSH75A030	30	75	125C	1.0k		175C	Si♦	DO5
102▼	SR75H	40	75	90C	1.0k	8.3m	150A	Si	DO5
103	75HQ040	40	75	115C	1.0k	8.3m	175J	Si♦	DO5
104	SSH75A040	40	75	125C	1.0k		175C	Si♦	DO5
105	75HQ045	45	75	115C	1.0k	8.3m	175J	Si♦	E203b
106▼	SR75K	50	75	90C	1.0k	8.3m	150A	Si	DO5
107	USD550(M)	50	75	115C	1.0k	8.3m	175J	Si♦	DO5
108	SSH75A050	50	75	125C	1.0k		175C	Si♦	DO5
109	SSH75A060	60	75	125C	1.0k		175C	Si♦	DO5
110	MBR8035	35	80	120C	1.0k	8.3m	175J	Si♦	DO5
111	SBR8035	35	80	120C	1.0k	8.3m	175J	Si♦	DO5
112	SBR8040	40	80	120C	1.0k	8.3m	175J	Si♦	DO5
113	MBR8045	45	80	120C	1.0k	8.3m	175J	Si♦	DO5
114	SBR8045	45	80	120C	1.0k	8.3m	175J	Si♦	DO5
115	SBR8050	50	80	120C	1.0k	8.3m	175J	Si♦	DO5
116	30S1S03	30	100		600	10m	125J	Si♦	S19z
117	30S1S04	40	100		600	10m	125J	Si♦	S19z
118	60HQ030	30	120	25C	800	8.3m	165S	Si♦	DO5
119	60HQ035	35	120	25C	800	8.3m	165S	Si♦	DO5
120	SSD51	45	120		800	8.3m	150	Si♦	DO5
121	60HQ045	45	120	25C	800	8.3m	165S	Si♦	DO5
122	SD51	45	120	90C	800	8.3m	150J	Si♦	DO5
123	151MQ30	30	150	86C	2.4k	10m	125J	Si♦	S464c
124	151MQ40	40	150	86C	2.4k	10m	125J	Si♦	S464c
125	VSK72	50	150	25	1.0k		175J	Si♦	DO5
126	VSK71	60	150	25	1.0k		175J	Si♦	DO5
127▼	ESAG84-004	40	200	95C	800	20m	125J	Si	M1361

SCHOTTKY RECTIFIER: DUAL

131▼	HSM88S	10	15m	25A			100J	Si	M500a
132▼	HSM88SR	10	15m	25A			100J	Si	M500e
133▼	HSM276S	3.0	30m	25A			150J	GA	M500
134	C4P03Q	30	4.0	116C	80	10m	125J	Si♦	Y220AB
135	C4P04Q	40	4.0	116C	80	10m	125J	Si♦	Y220AB
136	C4P05Q	50	4.0	115C	45	10m	125J	Si♦	Y220AB
137	C4P06Q	60	4.0	115C	45	10m	125J	Si♦	Y220AB
138	SB820	20	8.0	95L	250	8.3m	125J	Si♦	Y220
139	SB830	30	8.0	95L	250	8.3m	125J	Si♦	Y220
140	C8P03Q	30	8.0	106C	100	10m	125J	Si♦	Y220AB
141	SB840	40	8.0	95L	250	8.3m	125J	Si♦	Y220
142	C8P04Q	40	8.0	106C	100	10m	125J	Si♦	Y220AB
143	SB850	50	8.0	95L	250	8.3m	125J	Si♦	Y220
144	C8P05Q	50	8.0	103C	75	10m	125J	Si♦	Y220AB
145	SB860	60	8.0	95L	250	8.3m	125J	Si♦	Y220
146	C8P06Q	60	8.0	103C	75	10m	125J	Si♦	Y220AB
147	SB880	80	8.0	95L	250	8.3m	125J	Si♦	Y220
148	C10P03Q	30	10	100C	120	10m	125J	Si♦	Y220AB
149	C10P04Q	40	10	100C	120	10m	125J	Si♦	Y220AB
150	C10P05Q	50	10	98C	110	10m	125J	Si♦	Y220AB
151	C10P06Q	60	10	98C	110	10m	125J	Si♦	Y220AB
152	C10P10Q	100	10	99C	120	10m	125J	Si♦	Y220AB
153	VSK13	30	12	25	140		150J	Si♦	Y220
154	VSK14	40	12	25	140		150J	Si♦	Y220
155	C16P03Q	30	16	106C	180	10m	125J	Si♦	Y220AB
156	C16P04Q	40	16	106C	180	10m	125J	Si♦	Y220AB
157	ESAC83-004	45	16	100C	120		125J	Si♦	M1007a
158	C16P05Q	50	16	103C	150	10m	125J	Si♦	Y220AB
159	C16P06Q	60	16	103C	150	10m	125J	Si♦	Y220AB
160	C25P03Q	30	25	95C	250	10m	125J	Si♦	TO247
161	C25P04Q	40	25	95C	250	10m	125J	Si♦	TO247
162	ESAD82-004	45	25	100C	250		125J	Si♦	M1007a
163	C25P05Q	50	25	91C	200	10m	125J	Si♦	TO247
164	28CPQ050	50	25	95C	400		125J	Si♦	TO247
165	C25P06Q	60	25	91C	200	10m	125J	Si♦	TO247
166	28CPQ060	60	25	95C	400		125J	Si♦	TO247
167	C25P10Q	100	25	93C	250	10m	125J	Si♦	TO247
168	VSK3020T	20	30	25A	300		150J	Si♦	TO3*
169	VSK3030T	30	30	25A	300		150J	Si♦	TO3*
170	BYV43-30	30	30	85A	300		150J	Si♦	Y220AB*
171	C30H03Q	30	30	100C	300	10m	125J	Si♦	M1252
172	SSD241	35	30		400	8.3m	150	Si♦	TO3*
173	BYV43-35	35	30	85A	300		150J	Si♦	Y220AB*
174	MBR3035PT	35	30	105C	200	8.3m	150J	Si♦	M958
175	VSK3040T	40	30	25A	300		150J	Si♦	TO3*
176	BYV43-40	40	30	85A	300		150J	Si♦	Y220AB*
177	BYV43-40A	40	30	85A	300		150J	Si♦	Y220AB*
178	C30H04Q	40	30	100C	300	10m	125J	Si♦	M1252
179	BYV43-45	45	30	85A	300		150J	Si♦	Y220AB*
180	MBR3045PT	45	30	105C	200	8.3m	150J	Si♦	M958
181	40CDQ020	20	36	141C	400		175J	Si♦	TO3*
182	40CDQ030	30	36	141C	400		175J	Si♦	TO3*
183	40CDQ035	35	36	141C	400		175J	Si♦	TO3*
184	40CDQ040	40	36	141C	400		175J	Si♦	TO3*
185	40CDQ045	45	36	141C	400		175J	Si♦	TO3*
186	C60H03Q	30	60	94C	500	10m	125J	Si♦	M1252a
187	FST6035	35	60	150C	1.0k	8.3m	175J	Si♦	M1293
188	C60H04Q	40	60	94C	500	10m	125J	Si♦	M1252a
189	FST6040	40	60	150C	1.0k	8.3m	175J	Si♦	M1293
190	FST6045	45	60	150C	1.0k	8.3m	175J	Si♦	M1293
191	FST6050	50	60	150C	1.0k	8.3m	175J	Si♦	M1293
192	40S2S03	30	63		250	10m	125J	Si♦	M1098
193	40S2S04	40	63		250	10m	125J	Si♦	M1098
194	C80H03Q	30	80	85C	600	10m	125J	Si♦	M1252a
195	C80H04Q	40	80	85C	600	10m	125J	Si♦	M1252a
196	200CNQ020	20	100	105C	1.9k		150J	Si♦	M1220a*
197	200CNQ030	30	100	105C	1.9k		150J	Si♦	M1220a*
198	200CNQ035	35	100	105C	1.9k		150J	Si♦	M1220a*
199	200CNQ040	40	100	105C	1.9k		150J	Si♦	M1220a*
200	USM140C(MA)	40	100	115C	1.0k		175J	Si♦	M1299
201	200CNQ045	45	100	105C	1.9k		150J	Si♦	M1220a*
202	USM145C(MA)	45	100	115C	1.0k		175J	Si♦	M1299
203	USM150C(MA)	50	100	115C	1.0k		175J	Si♦	M1299
204▼	SRM1220	20	120	100C	900	8.3m	150A	Si	M1220
205	C120H03Q	30	120	81C	800	10m	125J	Si♦	M1252b
206▼	SRM1230	30	120	100C	900	8.3m	150A	Si	M1220
207	MBR12035CT	35	120	140C	800		175J	Si♦	C252
208	C120H04Q	40	120	78C	800	10m	125J	Si♦	M1252b
209▼	SRM1245	45	120	100C	900	8.3m	150A	Si	M1220
210	MBR12045CT	45	120	140C	800		175J	Si♦	C252
211▼	SRM1255	55	120	100C	900	8.3m	150A	Si	M1220
212	FST16035	35	160	103C	1.0k	8.3m	175J	Si♦	M1293
213	FST16040	40	160	103C	1.0k	8.3m	175J	Si♦	M1293
214	FST16045	45	160	103C	1.0k	8.3m	175J	Si♦	M1293
215	FST16050	50	160	103C	1.0k	8.3m	175J	Si♦	M1293
216▼	SRM2020	20	200	125C	2.0k	8.3m	150A	Si	M1220
217	201CNQ020	20	200	133C	1.9k	6.0m	175J	Si♦	M1220a
218▼	SRM2030	30	200	125C	2.0k	8.3m	150A	Si	M1220
219	201CNQ030	30	200	133C	1.9k	6.0m	175J	Si♦	M1220a
220	FST20035	35	200	131C	2.0k	8.3m	175J	Si♦	M1293

SYMBOLS AND CODES EXPLAINED IN INTERPRETER

9. SCHOTTKY RECTIFIERS, POWER - Dual Rectifier (Cont'd)

IN ORDER OF: (1) IO MAX (2) PIV (3) @ TEMP & (4) TYPE NUMBER

LINE No.	4 TYPE NUMBER	2 PIV (V)	MAX AVG FWD DC CURRENT 1 Io MAX (A)	3 @ TEMP (°C)	MAX RATING SURGE CURR PEAK 1 Cy (A)	PULSE WIDTH (s)	MAX. TEMP (°C)	MAT	DRAWING NUMBER
1	201CNQ035	35	200	133C	1.9k	6.0m	175J	Si♦	M1220a
2	MBR20035CT	35	200	140C	1.5k		175J	Si♦	C252
3	USM20040C(A)	40	200	115C	2.0k		175J	Si♦	M1300
4	FST20040	40	200	131C	2.0k	8.3m	175J	Si♦	M1293
5	201CNQ040	40	200	133C	1.9k	6.0m	175J	Si♦	M1220a
6	USM20045C(A)	45	200	115C	2.0k		175J	Si♦	M1300
7▼	SRM2045	45	200	125C	2.0k	8.3m	150A	Si	M1220
8	FST20045	45	200	131C	2.0k	8.3m	175J	Si♦	M1293
9	201CNQ045	45	200	133C	1.9k	6.0m	175J	Si♦	M1220a
10	MBR20045CT	45	200	140C	1.5k		175J	Si♦	C252
11	USM20050C(A)	50	200	115C	2.0k		175J	Si♦	M1300
12	FST20050	50	200	131C	2.0k	8.3m	175J	Si♦	M1293
13▼	SRM2055	55	200	125C	2.0k	8.3m	150A	Si	M1220
14	FST30035	35	300	113C	2.0k	8.3m	175J	Si♦	M1293
15	MBR30035CT	35	300	140C	2.5k	8.3m	175J	Si♦	M1239
16	FST30040	40	300	113C	2.0k	8.3m	175J	Si♦	M1293
17	FST30045	45	300	113C	2.0k	8.3m	175J	Si♦	M1293
18	MBR30045CT	45	300	140C	2.5k	8.3m	175J	Si♦	M1239
19	FST30050	50	300	113C	2.0k	8.3m	175J	Si♦	M1293

D.A.T.A.'s Military Electronic Devices Guide contains thousands of MIL-S-19500 qualified discretes, plus 883 and MIL-M-38510 ICs.

SYMBOLS AND CODES EXPLAINED IN INTERPRETER

IN ORDER OF: (1) REF. VOLTAGE (2) MAX PD MAX (3) TOLERANCE & (4) TYPE NUMBER

LOW-VOLTAGE ZENER

LINE No.	4 TYPE NUMBER	3 TOL. ± (%)	1 NOM. REF. VOLT. (V)	2 PD @ 25°C MAX (W)	TEST CUR. Izt (A)	MAX. DYN. IMP. (Ω)	TEMP. COEFF Tc MAX	MAX. TEMP (°C)	DWG. NO.
4▼	SZ16-1.8-5-25								
		5.0	1.8	10	25m			175J	u5d
5▼	SZ16-1.8-10-25								
		10	1.8	10	25m			175J	u5d
6▼	SZ16-1.8-20-25								
		20	1.8	10	25m			175J	u5d
7▼	SZ40-1.8-5-25								
		5.0	1.8	25	25m			175J	u5e
8▼	SZ40-1.8-10-25								
		10	1.8	25	25m			175J	u5e
9▼	SZ40-1.8-20-25								
		20	1.8	25	25m			175J	u5e
10▼	SZ16-2.0-5-25								
		5.0	2.0	10	25m			175J	u5d
11▼	SZ16-2.0-10-25								
		10	2.0	10	25m			175J	u5d
12▼	SZ16-2.0-20-25								
		20	2.0	10	25m			175J	u5d
13▼	SZ40-2.0-5-25								
		5.0	2.0	25	25m			175J	u5e
14▼	SZ40-2.0-10-25								
		10	2.0	25	25m			175J	u5e
15▼	SZ40-2.0-20-25								
		20	2.0	25	25m			175J	u5e
16	05Z2.0		2.0	500	10m	210	10	175J	DO35
17▼	SZ16-2.2-5-25								
		5.0	2.2	10	25m			175J	u5d
18▼	SZ16-2.2-10-25								
		10	2.2	10	25m			175J	u5d
19▼	SZ16-2.2-20-25								
		20	2.2	10	25m			175J	u5d
20▼	SZ40-2.2-5-25								
		5.0	2.2	25	25m			175J	u5e
21▼	SZ40-2.2-10-25								
		10	2.2	25	25m			175J	u5e
22▼	SZ40-2.2-20-25								
		20	2.2	25	25m			175J	u5e
23▼	SZ16-2.4-5-25								
		5.0	2.4	10	25m			175J	u5d
24▼	SZ16-2.4-10-25								
		10	2.4	10	25m			175J	u5d
25▼	SZ40-2.4-5-25								
		5.0	2.4	25	25m			175J	u5e
26▼	SZ40-2.4-10-25								
		10	2.4	25	25m			175J	u5e
27▼	SZ40-2.4-20-25								
		20	2.4	25	25m			175J	u5e
28▼	SZ16-2.7-5-25								
		5.0	2.7	10	25m			175J	u5d
29▼	SZ16-2.7-10-25								
		10	2.7	10	25m			175J	u5d
30▼	SZ16-2.7-20-25								
		20	2.7	10	25m			175J	u5d
31▼	SZ40-2.7-5-25								
		5.0	2.7	25	25m			175J	u5e
32▼	SZ40-2.7-10-25								
		10	2.7	25	25m			175J	u5e
33▼	SZ40-2.7-20-25								
		20	2.7	25	25m			175J	u5e
34	Z3A3.0	1†	3.0	10	50m	2.5	8.0	200J	S457Ø
35▼	SZ16-3.0-5-25								
		5.0	3.0	10	25m			175J	u5d
36	Z3B3.0	5†	3.0	10	50m	2.5	8.0	200J	S457Ø
37	C3C3.0Ø	10†	3.0	10	50m	2.5	8.0	200J	S457
38▼	SZ16-3.0-10-25								
		10	3.0	10	25m			175J	u5d
39▼	SZ16-3.0-20-25								
		20	3.0	10	25m			175J	u5d
40	Z7A3.0	1†	3.0	25	3.0	2.5	8.0	200J	S457Ø
41	Z7B3.0	5†	3.0	25	3.0	2.5	8.0	200J	S457Ø
42	C7C3.0Ø	10†	3.0	25	3.0	2.5	2.0	200J	S457
43▼	SZ40-3.0-10-25								
		10	3.0	25	25m			175J	u5e
44▼	SZ40-3.0-20-25								
		20	3.0	25	25m			175J	u5e
45	1N5333B	5	3.3	5.0	380m	3.0		200A	A1ee
46	BZV40C3V3	5	3.3	5.0	380m	3.0			A1ee
47	BZV48C3V3	5	3.3	5.0	380m	3.0	6.0	175J	DO27
48	BZV58C3V3	5	3.3	5.0	380m	3	6.0	175J	A1ee
49	ZC3.3B	5	3.3	5.0	380	4.0			A1ey
50	1N5333A	10	3.3	5.0	380m	3.0		200A	A1ee
51	ZC3.3A	10	3.3	5.0	380	4.0			A1ey
52	1N5333	20	3.3	5.0	380m			200A	A1ee
53	ZC3.3	20	3.3	5.0	380	4.0			A1ey
54	Z3A3.3	1†	3.3	10	50m	2.0	7.0	200J	S457Ø
55▼	SZ16-3.3-5-25								
		5.0	3.3	10	25m			175J	u5d
56	Z3B3.3	5†	3.3	10	50m	2.0	7.0	200J	S457Ø
57	C3C3.3Ø	10†	3.3	10	50m	2.0	7.0	200J	S457
58▼	SZ16-3.3-10-25								
		10	3.3	10	25m			175J	u5d
59▼	SZ16-3.3-20-25								
		20	3.3	10	25m			175J	u5d
60	Z7A3.3	1†	3.3	25	3.0	2.0	7.0	200J	S457Ø
61▼	SZ40-3.3-5-25								
		5.0	3.3	25	25m			175J	u5e
62	Z7B3.3	5†	3.3	25	3.0	2.0	7.0	200J	S457Ø
63	C7C3.3Ø	10†	3.3	25	3.0	2.0	7.0	200J	S457
64▼	SZ40-3.3-10-25								
		10	3.3	25	25m			175J	u5e
65▼	SZ40-3.3-20-25								
		20	3.3	25	25m			175J	u5e
66	1N5334B	5	3.6	5.0	350m	2.5		200A	A1ee
67	BZV40C3V6	5	3.6	5.0	350m	2.5			A1ee
68	BZV48C3V6	5	3.6	5.0	350m	2.5	5.5	175J	DO27
69	BZV58C3V6	5	3.6	5.0	350m	2.5	5.5	175J	A1ee
70	BZV58C3V9	5	3.6	5.0	320m	2	5.0	175J	A1ee
71	ZC3.6B	5	3.6	5.0	350	3.0			A1ey
72	1N5334A	10	3.6	5.0	350m	2.5		200A	A1ee
73	ZC3.6A	10	3.6	5.0	350	3.0			A1ey
74	1N5334	20	3.6	5.0	350m			200A	A1ee
75	ZC3.6	20	3.6	5.0	350	3.0			A1ey
76	Z3A3.6	1†	3.6	10	50m	2.0	6.0	200J	S457Ø
77▼	SZ16-3.6-5-25								
		5.0	3.6	10	25m			175J	u5d
78	Z3B3.6	5†	3.6	10	50m	2.0	6.0	200J	S457Ø
79	C3C3.6Ø	10†	3.6	10	50m	2.0	6.0	200J	S457
80▼	SZ16-3.6-10-25								
		10	3.6	10	25m			175J	u5d
81▼	SZ16-3.6-20-25								
		20	3.6	10	25m			175J	u5d
82	Z7A3.6	1†	3.6	25	3.0	2.0	6.0	200J	S457Ø
83▼	SZ40-3.6-5-25								
		5.0	3.6	25	25m			175J	u5e
84	Z7B3.6	5†	3.6	25	3.0	2.0	6.0	200J	S457Ø
85	C7C3.6Ø	10†	3.6	25	3.0	2.0	6.0	200J	S457
86▼	SZ40-3.6-10-25								
		10	3.6	25	25m			175J	u5e
87▼	SZ40-3.6-20-25								
		20	3.6	25	25m			175J	u5e
88	Z6A3.6	1†	3.6	75	5.0	800m	6.0	200J	DO5Ø
89	Z6B3.6	5†	3.6	75	5.0	800m	6.0	200J	DO5Ø
90	C6C3.6Ø	10†	3.6	75	5.0	800m	6.0	200J	DO5
91	1N5335B	5	3.9	5.0	320m	2.0		200A	A1ee
92	BZV40C3V9	5	3.9	5.0	320m	2.0			A1ee
93	BZV48C3V9	5	3.9	5.0	320m	2.0	5.0	175J	DO27
94	ZC3.9B	5	3.9	5.0	320	2.5			A1ey
95	1N5335A	10	3.9	5.0	320m	2.0		200A	A1ee
96	ZC3.9A	10	3.9	5.0	320	2.5			A1ey
97	1N5335	20	3.9	5.0	320m			200A	A1ee
98	ZC3.9	20	3.9	5.0	320	2.5			A1ey
99	Z3A3.9	1†	3.9	10	50m	1.5	5.0	200J	S457Ø
100	1N1599A	5	3.9	10	500m	1.5	4.0	200S	DO4
101	1N3993A	5	3.9	10	640m	2.0		175S	DO4
102▼	SZ16-3.9-5-25								
		5.0	3.9	10	25m			175J	u5d
103	Z3B3.9	5†	3.9	10	50m	1.5	5.0	200J	S457Ø
104	1N1599	10	3.9	10	500m	1.5	4.0	200S	DO4
105	1N3993	10	3.9	10	640m	2.0		175S	DO4
106	C3C3.9Ø	10†	3.9	10	50m	1.5	5.0	200J	S457
107▼	SZ16-3.9-10-25								
		10	3.9	10	25m			175J	u5d
108▼	SZ16-3.9-20-25								
		20	3.9	10	25m			175J	u5d
109	BZX98C3V9	5	3.9	12	100m	7.0	7.0	150J	S4af
110	Z7A3.9	1†	3.9	25	3.0	1.5	5.0	200J	S457Ø
111▼	SZ40-3.9-5-25								
		5.0	3.9	25	25m			175J	u5e
112	Z7B3.9	5†	3.9	25	3.0	1.5	5.0	200J	S457Ø
113	ZX3.9	5	3.9	25	100	7.0	2.0	150J	S441
114	C7C3.9Ø	10†	3.9	25	3.0	1.5	5.0	200J	S457
115▼	SZ40-3.9-10-25								
		10	3.9	25	25m			175J	u5e
116▼	SZ40-3.9-20-25								
		20	3.9	25	25m			175J	u5e
117	1N4549B	5	3.9	50	3.2	160m		175J	S4w
118	1N4557B	5	3.9	50	3.2	160m	4.6	175J	C5a
119	MZT4549B	5.0	3.9	50	3.2	160m		150J	Y220AC
120	1N4549A	10	3.9	50	3.2	160m		175J	S4w
121	1N4557A	10	3.9	50	3.2	160m	4.6	175J	C5a
122	MZT4549A	10	3.9	50	3.2	160m		150J	Y220AC
123	1N4549	20	3.9	50	3.2	160m		175J	S4w
124	1N4557	20	3.9	50	3.2	160m	4.6	175J	C5a
125	MZT4549	20	3.9	50	3.2	160m		150J	Y220AC
126	Z6A3.9	1†	3.9	75	5.0	700m	5.0	200J	DO5Ø
127	Z6B3.9	5†	3.9	75	5.0	700m	5.0	200J	DO5Ø
128	C6C3.9Ø	10†	3.9	75	5.0	700m	5.0	200J	DO5
129	80TF3.9,A	5†	3.9	80	2.6	6.0m	4.0	125C	M117c
130	1N5336B	5	4.3	5.0	290m	2.0		200A	A1ee
131	BZV40C4V3	5	4.3	5.0	290m	2.0			A1ee
132	BZV48C4V3	5	4.3	5.0	290m	2.0	4.0	175J	DO27
133	BZV58C4V3	5	4.3	5.0	290m	2	4.0	175J	A1ee
134	ZC4.3B	5	4.3	5.0	290	2.5			A1ey
135	1N5336A	10	4.3	5.0	290m	2.0		200A	A1ee
136	ZC4.3A	10	4.3	5.0	290	2.5			A1ey
137	1N5336	20	4.3	5.0	290m			200A	A1ee
138	ZC4.3	20	4.3	5.0	290	2.5			A1ey
139	Z3A4.3	1†	4.3	10	50m	1.5	4.0	200J	S457Ø
140	1N3994A	5	4.3	10	580m	1.5		175S	DO4
141▼	SZ16-4.3-5-25								
		5.0	4.3	10	25m			175J	u5d
142	Z3B4.3	5†	4.3	10	50m	1.5	4.0	200J	S457Ø
143	1N3994	10	4.3	10	580m	1.5		175S	DO4
144	C3C4.3Ø	10†	4.3	10	50m	1.5	4.0	200J	S457
145▼	SZ16-4.3-10-25								
		10	4.3	10	25m			175J	u5d
146▼	SZ16-4.3-20-25								
		20	4.3	10	25m			175J	u5d
147	BZX98C4V3	5	4.3	12	100m	7.0	7.0	150J	S4af
148	Z7A4.3	1†	4.3	25	3.0	1.5	4.0	200J	S457Ø
149▼	SZ40-4.3-5-25								
		5.0	4.3	25	25m			175J	u5e
150	Z7B4.3	5†	4.3	25	3.0	1.5	4.0	200J	S457Ø
151	ZX4.3	5	4.3	25	100	7.0	2.0	150J	S441
152	C7C4.3Ø	10†	4.3	25	3.0	1.5	4.0	200J	S457
153▼	SZ40-4.3-10-25								
		10	4.3	25	25m			175J	u5e
154▼	SZ40-4.3-20-25								
		20	4.3	25	25m			175J	u5e
155	1N4550B	5	4.3	50	2.9	160m		175J	S4w
156	1N4558B	5	4.3	50	2.9	160m	3.3	175J	C5a
157	MZT4550B	5.0	4.3	50	2.9	160m		150J	Y220AC
158	1N4550A	10	4.3	50	2.9	160m		175J	S4w
159	1N4558A	10	4.3	50	2.9	160m	3.3	175J	C5a
160	MZT4550A	10	4.3	50	2.9	160m		150J	Y220AC
161	1N4550	20	4.3	50	2.9	160m		175J	S4w
162	1N4558	20	4.3	50	2.9	160m	3.3	175J	C5a

SYMBOLS AND CODES EXPLAINED IN INTERPRETER

10. VOLTAGE REGULATOR DIODES, POWER - Low Voltage (Cont'd)

IN ORDER OF: (1) REF. VOLTAGE (2) MAX PD MAX (3) TOLERANCE & (4) TYPE NUMBER

LINE No.	4 TYPE NUMBER	3 TOL. ± (%)	1 NOM. REF. VOLT. (V)	2 PD @ 25°C MAX (W)	TEST CUR. Izt (A)	MAX. DYN. IMP. (Ω)	TEMP. COEFF Tc MAX	MAX. TEMP (°C)	DWG. NO.
1	MZT4550	20	4.3	50	2.9	160m		150J	Y220AC
2	Z6A4.3	1†	4.3	75	5.0	600m	4.0	200J	DO5Ø
3	Z6B4.3	5†	4.3	75	5.0	600m	4.0	200J	DO5Ø
4	C6C4.3Ø	10†	4.3	75	5.0	600m	4.0	200J	DO5
5	1S262	10	4.5	10	500m	2.5	2.2	150J	S19g
$V_Z \geq 4.7$ V									
9	1N5337B	5	4.7	5.0	260m	2.0		200A	A1ee
10	BZV40C4V7	5	4.7	5.0	260m	2.0			A1ee
11	BZV48C4V7	5	4.7	5.0	260m	2.0	2.0	175J	DO27
12	BZV58C4V7	5	4.7	5.0	260m	2	2.0	175J	A1ee
13	ZC4.7B	5	4.7	5.0	260	2.5			A1ey
14	1N5337A	10	4.7	5.0	260m	2.0		200A	A1ee
15	ZC4.7A	10	4.7	5.0	260	2.5			A1ey
16	1N5337	20	4.7	5.0	260m			200A	A1ee
17	ZC4.7	20	4.7	5.0	260	2.5			A1ey
18	RD5DLM		4.7	10	400m	1.8		150J	S19s
19	Z3A4.7	1†	4.7	10	50m	1.0	1.0	200J	S457Ø
20	1N1482	5	4.7	10	200m	3.0 †	4.0	175C	S154
21	1N1600A	5	4.7	10	400m	900m	0.0	200S	DO4
22	1N3995A	5	4.7	10	530m	1.2		175S	DO4
23▼	SZ16-4.7-5-25	5.0	4.7	10	25m			175J	u5d
24	Z3B4.7	5†	4.7	10	50m	1.0	1.0	200J	S457Ø
25	1N1600	10	4.7	10	400m	900m	0.0	200S	DO4
26	1N3995	10	4.7	10	530m	1.2		175S	DO4
27	C3C4.7Ø	10†	4.7	10	50m	1.0	1.0	200J	S457
28▼	SZ16-4.7-10-25	10	4.7	10	25m			175J	u5d
29▼	SZ16-4.7-20-25	20	4.7	10	25m			175J	u5d
30	BZX98C4V7	5	4.7	12	100m	7.0	7.0	150J	S4af
31	Z7A4.7	1†	4.7	25	3.0	1.0	1.0	200J	S457Ø
32▼	SZ40-4.7-5-25	5.0	4.7	25	25m			175J	u5e
33	Z7B4.7	5†	4.7	25	3.0	1.0	3.0	200J	S457Ø
34	ZX4.7	5	4.7	25	100	7.0	1.0	150J	S441
35	C7C4.7Ø	10†	4.7	25	3.0	1.0	1.0	200J	S457
36▼	SZ40-4.7-10-25	10	4.7	25	25m			175J	u5e
37▼	SZ40-4.7-20-25	20	4.7	25	25m			175J	u5e
38	1N4551B	5	4.7	50	2.6	120m		175J	S4w
39	1N4559B	5	4.7	50	2.6	120m	1.5	175J	C5a
40	MZT4551B	5.0	4.7	50	2.6	120m		150J	Y220AC
41	1N4551A	10	4.7	50	2.6	120m		175J	S4w
42	1N4559A	10	4.7	50	2.6	120m	1.5	175J	C5a
43	MZT4551A	10	4.7	50	2.6	120m		150J	Y220AC
44	1N4551	20	4.7	50	2.6	120m		175J	S4w
45	1N4559	20	4.7	50	2.6	120m	1.5	175J	C5a
46	MZT4551	20	4.7	50	2.6	120m		150J	Y220AC
47	Z6A4.7	1†	4.7	75	5.0	500m	3.0	200J	DO5Ø
48	Z6B4.7	5†	4.7	75	5.0	500m	3.0	200J	DO5Ø
49	C6C4.7Ø	10†	4.7	75	5.0	500m	1.0	200J	DO5
50	80TF4.7,A	5†	4.7	80	2.1	8.0m	4.0	125C	M117c
51	RD5DK		4.8	10	400m	1.8		150J	S19s
52	1N2041	10	4.85	10	1.0	1.0		175A	DO4
53	1N2041C	5	4.9	10	1.0	.50		150A	S19a
54	RD5DMN		5.0	10	400m	1.8		150J	S19s
55	1N4240	2	5.0	10	400m	.68		175S	DO4
56	1N5338B	5	5.1	5.0	240m	1.5		200A	A1ee
57	BZV40C5V1	5	5.1	5.0	240m	1.5			A1ee
58	BZV48C5V1	5	5.1	5.0	240m	1.5	1.0	175J	DO27
59	BZV58C5V1	5	5.1	5.0	240m	1.5	1.0	175J	A1ee
60	ZC5.1B	5	5.1	5.0	240	2.0			A1ey
61	1N5338A	10	5.1	5.0	240m	1.5		200A	A1ee
62	ZC5.1A	10	5.1	5.0	240	2.0			A1ey
63	1N5338	20	5.1	5.0	240m			200A	A1ee
64	ZC5.1	20	5.1	5.0	240	2.0			A1ey
65	Z3A5.1	1†	5.1	10	50m	1.0	1.0	200J	S457Ø
66	1N3996A	5	5.1	10	490m	1.1		175S	DO4
67▼	SZ16-5.1-5-25	5.0	5.1	10	25m			175J	u5d
68	Z3B5.1	5†	5.1	10	50m	1.0	1.0	200J	S457Ø
69	1N3996	10	5.1	10	490m	1.1		175S	DO4
70	C3C5.1Ø	10†	5.1	10	50m	1.0	1.0	200J	S457
71▼	SZ16-5.1-10-25	10	5.1	10	25m			175J	u5d
72▼	SZ16-5.1-20-25	20	5.1	10	25m			175J	u5d
73	BZX98C5V1	5	5.1	12	100m	5.0	6.0	150J	S4af
74	Z7A5.1	1†	5.1	25	3.0	1.0	1.0	200J	S457Ø
75▼	SZ40-5.1-5-25	5.0	5.1	25	25m			175J	u5e
76	Z7B5.1	5†	5.1	25	3.0	1.0	2.0	200J	S457Ø
77	ZX5.1	5	5.1	25	100	5.0	1.0	150J	S441
78	C7C5.1Ø	10†	5.1	25	3.0	1.0	1.0	200J	S457
79▼	SZ40-5.1-10-25	10	5.1	25	25m			175J	u5e
80▼	SZ40-5.1-20-25	20	5.1	25	25m			175J	u5e
81	1N4552B	5	5.1	50	2.4	120m		175J	S4w
82	1N4560B	5	5.1	50	2.4	120m	1.0	175J	C5a
83	MZT4552B	5.0	5.1	50	2.4	120m		150J	Y220AC
84	1N4552A	10	5.1	50	2.4	120m		175J	S4w
85	1N4560A	10	5.1	50	2.4	120m	1.0	175J	C5a
86	MZT4552A	10	5.1	50	2.4	120m		150J	Y220AC
87	1N4552	20	5.1	50	2.4	120m		175J	S4w
88	1N4560	20	5.1	50	2.4	120m	1.0	175J	C5a
89	MZT4552	20	5.1	50	2.4	120m		150J	Y220AC
90	Z6A5.1	1†	5.1	75	5.0	400m	2.0	200J	DO5Ø
91	Z6B5.1	5†	5.1	75	5.0	400m	2.0	200J	DO5Ø
92	C6C5.1Ø	10†	5.1	75	5.0	400m	2.0	200J	DO5
93	1N2042A	5	5.5	10	1.0	.70		150A	S19a
94	1N3984	5	5.5	10	1.0	.70		150S	DO4
95	1S263	10	5.5	10	500m	2.0	3.6	150J	S19g
96	1N5339B	5	5.6	5.0	220m	1.0		200A	A1ee
97	BZV40C5V6	5	5.6	5.0	220m	1.0			A1ee
98	BZV48C5V6	5	5.6	5.0	220m	1.0	2.5	175J	DO27
99	BZV58C5V6	5	5.6	5.0	220m	1	2.5	175J	A1ee
100	ZC5.6B	5	5.6	5.0	220m	1.5			A1ey
101	1N5339A	10	5.6	5.0	220m	1.0		200A	A1ee
102	ZC5.6A	10	5.6	5.0	220m	1.5			A1ey
103	1N5339	20	5.6	5.0	220m			200A	A1ee
104	ZC5.6	20	5.6	5.0	220m	1.5			A1ey
105	D815A	15	5.6	8.0	50m	40 †	5.6	100C	S494
106	RD6DLM		5.6	10	400m	1.8		150J	S19s
107	Z3A5.6	1†	5.6	10	50m	500m	2.0	200J	S457Ø
108	1N1601A	5	5.6	10	350m	600m	3.0	200S	DO4
109	1N1803A	5	5.6	10	1.0	1.0		175A	S11Ø
110	1N3997A	5	5.6	10	445m	1.0		175S	DO4
111▼	SZ16-5.6-5-25	5.0	5.6	10	25m			175J	u5d
112	Z3B5.6	5†	5.6	10	50m	500m	2.0	200J	S457Ø
113	1N1601	10	5.6	10	350m	600m	3.0	200S	DO4
114	1N1803	10	5.6	10	1.0	1.0		175A	S11Ø
115	1N3997	10	5.6	10	445m	1.0		175S	DO4
116	C3C5.6Ø	10†	5.6	10	50m	500m	2.0	200J	S457
117▼	SZ16-5.6-10-25	10	5.6	10	25m			175J	u5d
118	1N1803B	20	5.6	10	1.0	1.0			S11e
119▼	SZ16-5.6-20-25	20	5.6	10	25m			175J	u5d
120	BZX98C5V6	5	5.6	12	100m	2.0	5.0	150J	S4af
121	Z7A5.6	1†	5.6	25	2.0	500m	2.0	200J	S457Ø
122▼	SZ40-5.6-5-25	5.0	5.6	25	25m			175J	u5e
123	Z7B5.6	5†	5.6	25	2.0	500m	2.0	200J	S457Ø
124	ZX5.6	5	5.6	25	100	2.0	1.0	150J	S441
125	C7C5.6Ø	10†	5.6	25	2.0	500m	2.0	200J	S457
126▼	SZ40-5.6-10-25	10	5.6	25	25m			175J	u5e
127▼	SZ40-5.6-20-25	20	5.6	25	25m			175J	u5e
128	1N4553B	5	5.6	50	2.2	120m		175J	S4w
129	1N4561B	5	5.6	50	2.2	120m	3.0	175J	C5a
130	MZT4553B	5.0	5.6	50	2.5	120m		150J	Y220AC
131	1N4553A	10	5.6	50	2.2	120m		175J	S4w
132	1N4561A	10	5.6	50	2.2	120m	3.0	175J	C5a
133	MZT4553A	10	5.6	50	2.5	120m		150J	Y220AC
134	1N4553	20	5.6	50	2.2	120m		175J	S4w
135	1N4561	20	5.6	50	2.2	120m	3.0	175J	C5a
136	MZT4553	20	5.6	50	2.5	120m		150J	Y220AC
137	Z6A5.6	1†	5.6	75	5.0	400m	2.0	200J	DO5Ø
138	Z6B5.6	5†	5.6	75	5.0	400m	2.0	200J	DO5Ø
139	C6C5.6Ø	10†	5.6	75	5.0	400m	2.0	200J	DO5
140	80TF5.6,A	5†	5.6	80	1.8	10m	4.0	125C	M117a
141	RD6DK		5.8	10	400m	1.8		150J	S19s
142	1N2042C	5	5.8	10	1.0	.70		150A	S19a
143	1N2042	10	5.8	10	1.0	700m		175A	DO4
144	RD6DMN		5.9	10	400m	1.8		150J	S19s
145	1N5340B	5	6.0	5.0	200m	1.0		200A	A1ee
146	1N5340A	10	6.0	5.0	200m	1.0		200A	A1ee
147	1N5340	20	6.0	5.0	200m			200A	A1ee
148	1N4241	2	6.0	10	350m	.50		175S	DO4
149	1N3985	5	6.0	10	1.0	.70		150S	DO4
150	10KZ6.8	10†	6.12	10	175m		.05		DO4§
151	1N5341B	5	6.2	5.0	200m	1.0		200A	A1ee
152	BZV40C6V2	5	6.2	5.0	200m	1.0			A1ee
153	BZV48C6V2	5	6.2	5.0	200m	1.0	3.2	175J	DO27
154	BZV58C6V2	5	6.2	5.0	200m	1	3.2	175J	A1ee
155	ZC6.2B	5	6.2	5.0	200m	1.5			A1ey
156	1N5341A	10	6.2	5.0	200m	1.0		200A	A1ee
157	ZC6.2A	10	6.2	5.0	200m	1.5			A1ey
158	1N5341	20	6.2	5.0	200m			200A	A1ee
159	ZC6.2	20	6.2	5.0	200m	1.5			A1ey
160	Z3A6.2	1†	6.2	10	50m	300m	3.0	200J	S457Ø
161	1N1483§	5	6.2	10	200m	2.0 †	3.0	175C	S154
162	1N1804A	5	6.2	10	1.0	1.0		175A	S11Ø
163	1N3986	5	6.2	10	805m	1.5		150S	DO4
164	1N3998A	5	6.2	10	405m	1.1		175S	DO4
165▼	SZ16-6.2-5-25	5.0	6.2	10	25m			175J	u5d
166	Z3B6.2	5†	6.2	10	50m	300m	3.0	200J	S457Ø
167	1N1804	10	6.2	10	1.0	1.0		175A	S11Ø
168	1N3998	10	6.2	10	405m	1.1		175S	DO4
169	C3C6.2Ø	10†	6.2	10	50m	300m	3.0	200J	S457
170▼	SZ16-6.2-10-25	10	6.2	10	25m			175J	u5d
171	1N1804B	20	6.2	10	1	1.0			S11e
172▼	SZ16-6.2-20-25	20	6.2	10	25m			175J	u5d
173	BZX98C6V2	5	6.2	12	100m	2.0	6.0	150J	S4af
174	Z7A6.2	1†	6.2	25	2.0	300m	3.0	200J	S457Ø
175▼	SZ40-6.2-5-25	5.0	6.2	25	25m			175J	u5e
176	Z7B6.2	5†	6.2	25	2.0	300m	3.0	200J	S457Ø
177	ZX6.2	5	6.2	25	100	2.0	3.0	150J	S441
178	C7C6.2Ø	10†	6.2	25	2.0	300m	3.0	200J	S457
179▼	SZ40-6.2-10-25	10	6.2	25	25m			175J	u5e
180▼	SZ40-6.2-20-25	20	6.2	25	25m			175J	u5e
181	1N4554B	5	6.2	50	2.0	140m		175J	S4w
182	1N4562B	5	6.2	50	2.0	140m	4.9	175J	C5a
183	50Z6.2,A,B	5†	6.2	50	2.0	140m	4.0	175	C5a
184	MZT4554B	5.0	6.2	50	2.0	140m		150J	Y220AC
185	1N4554A	10	6.2	50	2.0	140m		175J	S4w
186	1N4562A	10	6.2	50	2.0	140m	4.9	175J	C5a
187	MZT4554A	10	6.2	50	2.0	140m		150J	Y220AC
188	1N4554	20	6.2	50	2.0	140m		175J	S4w
189	1N4562	20	6.2	50	2.0	140m	4.9	175J	C5a
190	MZT4554	20	6.2	50	2.0	140m		150J	Y220AC
191	Z6A6.2	1†	6.2	75	5.0	300m	3.0	200J	DO5Ø
192	Z6B6.2	5†	6.2	75	5.0	300m	3.0	200J	DO5Ø
193	C6C6.2Ø	10†	6.2	75	5.0	300m	3.0	200J	DO5
194	BZV53A(A)	5	6.2	200	7.5m	15	1.0	150J	TO236
195	BZV53B(A)	5	6.2	200	7.5m	15	0.5	150J	TO236
196	BZV54A(A)	5	6.4	200	7.5m	200	1.0	150J	TO236

SYMBOLS AND CODES EXPLAINED IN INTERPRETER

10. VOLTAGE REGULATOR DIODES, POWER - $V_Z \geq 4.7$ V (Cont'd)

IN ORDER OF: (1) REF. VOLTAGE (2) MAX PD MAX (3) TOLERANCE & (4) TYPE NUMBER

LINE No.	4 TYPE NUMBER	3 TOL. ± (%)	1 NOM. REF. VOLT. (V)	2 PD @ 25°C MAX (W)	TEST CUR. Izt (A)	MAX. DYN. IMP. (Ω)	TEMP. COEFF Tc MAX	MAX. TEMP (°C)	DWG. NO.
1	BZV54B(A)	5	6.4	200	7.5m	200	0.5	150J	TO236
2	1S264	10	6.5	10	350m	1.2	3.0	150J	S19g
3	RD7DLM		6.7	10	400m	1.8		150J	S19s
4	50KZ5.0A		6.70	50	50m				DO5§
5	10KZ7.5	10†	6.75	10	175m		.06		DO4§
6	CTZC6.8CØ	1	6.8	5.0	175m	1.0 †	4.0	175A	A1ey
7	TZC6.8C	1	6.8	5.0	175m	1.0 †	4.0	175A	A1ey
8	CTZC6.8EØ	3	6.8	5.0	175m	1.0 †	4.0	175A	A1ey
9	TZC6.8E	3	6.8	5.0	175m	1.0 †	4.0	175A	A1ey
10	1N4954	5	6.8	5.0	175m	1.0		175A	A146m
11	1N5342B	5	6.8	5.0	175m	1.0		200A	A1ee
12	BZV40C6V8	5	6.8	5.0	175m	1.0			A1ee
13	BZV48C6V8	5	6.8	5.0	175m	1.0	4.0	175J	DO27
14	BZV58C6V8	5	6.8	5.0	175m	1	4.0	175J	A1ee
15	CTZC6.8,A,B,DØ								
		5†	6.8	5.0	175m	1.0 †	4.0	175A	A1ey
16	DSZ4706	5	6.8	5.0	175m	1.0		175	A60ae
17	DSZ5706	5	6.8	5.0	175m	2.0	5.0	175A	A60r
18	MZ5706	5	6.8	5.0	175m	1.0	4.0		A60f
19	TZC6.8,A,B,D								
		5†	6.8	5.0	175m	1.0 †	4.0	175A	A1ey
20	UZ4706	5	6.8	5.0	175m	1.0		175A	A380a
21	UZ5706	5	6.8	5.0	175m	1.0	5.0	175A	A380a
22	ZC6.8	5†	6.8	5.0	175m	1.0		150A	A1ey
23	ZC6.8B	5	6.8	5.0	175m	1.0			A1ey
24	1N5342A	10	6.8	5.0	175m	1.0		200A	A1ee
25	DSZ4806	10	6.8	5.0	175m	1.0		175	A60ae
26	DSZ5806	10	6.8	5.0	175m	2.0	5.0	175A	A60r
27	MZ5806	10	6.8	5.0	175m	1.0	4.0		A60f
28	UZ4806	10	6.8	5.0	175m	1.0		175A	A380a
29	UZ5806	10	6.8	5.0	175m	1.0	5.0	175A	A380a
30	ZC6.8A	10	6.8	5.0	175m	1.0			A1ey
31	1N5342	20	6.8	5.0	175m			200A	A1ee
32	MZ5906	20	6.8	5.0	175m	1.0	4.0		A60f
33	UZ5906	20	6.8	5.0	175m	1.0	5.0	175A	A380a
34	UZ7706L	5	6.8	5.5	350m	0.6	.04	175	A380c
35	UZ7806L	10	6.8	5.5	350m	0.6	.04	175	A380c
36	UZ7906L	20	6.8	5.5	350m	0.6	.04	175	A380a
37	6ALZ6.8A	5	6.8	6.0	175m			170J	A416
38	6ALZ6.8	10	6.8	6.0	175m			170J	A416
39	6ALZ6.8B	20	6.8	6.0	175m			170J	A416
40	D815B	15	6.8	8.0	50m	30 †	6.2	100C	S494
41	Z3A6.8	1†	6.8	10	50m	200m	4.0	200J	S457Ø
42	1N1602A	5	6.8	10	300m	400m	5.0	200S	DO4
43	1N1805A	5	6.8	10	1.0	1.0		175A	S11Ø
44	1N2970B	5	6.8	10	370m	1.2		175C	DO4Ø
45	1N3999A	5	6.8	10	370m	1.2		175S	DO4
46	1N4194B	5	6.8	10	370m	1.2		200S	DO10
47	1N4258B	5	6.8	10	370m	1.2	4.0	175C	S134
48	1S5006,A	5†	6.8	10	200m	1.5	4.0	150C	DO4
49	1S6006A	5	6.8	10	200m	4.0	3.0	150	DO4
50	MZT2970B	5.0	6.8	10	370m	1.2		150J	Y220AC
51▼	SZ16-6.8-5-25								
		5.0	6.8	10	25m			175J	u5d
52	UZ7706	5	6.8	10	350m	0.6	4.0	175	S277
53	Z3B6.8	5†	6.8	10	50m	200m	4.0	200J	S457Ø
54	1N1602	10	6.8	10	300m	400m	5.0	200S	DO4
55	1N1805	10	6.8	10	1.0	1.0		175A	S11Ø
56	1N2970A	10	6.8	10	370m	1.2		175C	DO4Ø
57	1N3999	10	6.8	10	370m	1.2		175S	DO4
58	1N4194A	10	6.8	10	370m	1.2		200S	DO10
59	1N4258A	10	6.8	10	370m	1.2	4.0	175C	S134
60	1S6006	10	6.8	10	200m	6.0	3.0	150	DO4
61	C3C6.8Ø	10†	6.8	10	50m	200m	4.0	200J	S457
62	MZT2970A	10	6.8	10	370m	1.2		150J	Y220AC
63▼	SZ16-6.8-10-25								
		10	6.8	10	25m			175J	u5d
64	UZ7806	10	6.8	10	350m	0.6	4.0	175	S277
65	1N1805B	20	6.8	10	1	1.0			S11e
66	1N2970	20	6.8	10	370m	1.2		175C	DO4Ø
67	1N4194	20	6.8	10	370m	1.2		200S	DO10
68	1N4258	20	6.8	10	370m	1.2	4.0	175C	S134
69	MZT2970	20	6.8	10	370m	1.2		150J	Y220AC
70▼	SZ16-6.8-20-25								
		20	6.8	10	25m			175J	u5d
71	UZ7906	20	6.8	10	350m	0.6	4.0	175	S277
72	BZX98C6V8	5	6.8	12	100m	2.0	7.0	150J	S4af
73	BZY93C6V8	5	6.8	20	2.0	200m	3.6	175J	DO4Ø
74	Z7A6.8	1†	6.8	25	2.0	200m	4.0	200J	S457Ø
75▼	SZ40-6.8-5-25								
		5.0	6.8	25	25m			175J	u5e
76	Z7B6.8	5†	6.8	25	2.0	200m	4.0	200J	S457Ø
77	ZX6.8	5	6.8	25	100	2.0	4.0	150J	S441
78	C7C6.8Ø	10†	6.8	25	2.0	200m	4.0	200J	S457
79▼	SZ40-6.8-10-25								
		10	6.8	25	25m			175J	u5e
80▼	SZ40-6.8-20-25								
		20	6.8	25	25m			175J	u5e
81	1N2804B	5	6.8	50	1.8	200m	4.0	175S	C5a
82	1N3305B	5	6.8	50	1.8	200m		175J	S4w
83	1N4555B	5	6.8	50	1.8	160m		175J	S4w
84	1N4563B	5	6.8	50	1.8	160m	5.3	175J	C5a
85	50T6.8,A,B	5†	6.8	50	1.8	.20	4.0		S19e
86	50Z6.8,A,B	5†	6.8	50	1.8	200m	4.0	175	C5a
87	MZT3305B	5.0	6.8	50	1.8	200m		150J	Y220AC
88	1N2804A	10	6.8	50	1.8	200m	4.0	175S	C5a
89	1N3305A	10	6.8	50	1.8	200m		175J	S4w
90	1N4555A	10	6.8	50	1.8	160m		175J	S4w
91	1N4563A	10	6.8	50	1.8	160m	5.3	175J	C5a
92	MZT3305A	10	6.8	50	1.8	200m		150J	Y220AC
93	1N2804	20	6.8	50	1.8	200m	4.0	175S	C5a
94	1N3305	20	6.8	50	1.8	200m		175J	S4w
95	1N4555	20	6.8	50	1.8	160m		175J	S4w
96	1N4563	20	6.8	50	1.8	160m	5.3	175J	C5a
97	MZT3305	20	6.8	50	1.8	200m		150J	Y220AC
98	Z6A6.8	1†	6.8	75	5.0	200m	4.0	200J	DO5Ø
99	Z6B6.8	5†	6.8	75	5.0	200m	4.0	200J	DO5Ø
100	C6C6.8Ø	10†	6.8	75	5.0	200m	4.0	200J	DO5
101	80TF6.8,A	5†	6.8	80	1.5	12m	4.0	125C	M117c
102	50KZ5.0		6.85	50	50m				DO5§
103	50KZ6.0A		7.02	50	50m				DO5§
104	RD7DK		7.1	10	400m	1.8		150J	S19s
105▼	SZ16-7.1-5-25								
		5.0	7.1	10	25m			175J	u5d
106	1N2043	10	7.1	10	1.0	800m		175A	DO4
107▼	SZ16-7.1-10-25								
		10	7.1	10	25m			175J	u5d
108▼	SZ16-7.1-20-25								
		20	7.1	10	25m			175J	u5d
109▼	SZ40-7.1-5-25								
		5.0	7.1	25	25m			175J	u5e
110▼	SZ40-7.1-10-25								
		10	7.1	25	25m			175J	u5e
111▼	SZ40-7.1-20-25								
		20	7.1	25	25m			175J	u5e
112	RD7DMN		7.2	10	400m	1.8		150J	S19s
113	10KZ8.2	10†	7.38	10	150m		.06		DO4§
114	50KZ6.0		7.41	50	50m				DO5§

$V_Z \geq 7.5$ V

LINE No.	4 TYPE NUMBER	3 TOL. ± (%)	1 NOM. REF. VOLT. (V)	2 PD @ 25°C MAX (W)	TEST CUR. Izt (A)	MAX. DYN. IMP. (Ω)	TEMP. COEFF Tc MAX	MAX. TEMP (°C)	DWG. NO.
118	CTZC7.5CØ	1	7.5	5.0	175m	1.5 †	4.5	175A	A1ey
119	TZC7.5C	1	7.5	5.0	175m	1.5 †	4.5	175A	A1ey
120	CTZC7.5EØ	3	7.5	5.0	175m	1.5 †	4.5	175A	A1ey
121	TZC7.5E	3	7.5	5.0	175m	1.5 †	4.5	175A	A1ey
122	1N4955	5	7.5	5.0	175m	1.5		175A	A146m
123	1N5343B	5	7.5	5.0	175m	1.5		200A	A1ee
124	BZV40C7V5	5	7.5	5.0	175m	1.5			A1ee
125	BZV48C7V5	5	7.5	5.0	175m	1.5	4.5	175J	DO27
126	BZV58C7V5	5	7.5	5.0	175m	1.5	4.5	175J	A1ee
127	CTZC7.5,A,B,DØ								
		5†	7.5	5.0	175m	1.5 †	4.5	175A	A1ey
128	DSZ4707	5	7.5	5.0	175m	1.5		175	A60ae
129	DSZ5707	5	7.5	5.0	175m	2.0	6.0	175A	A60r
130	MZ5707	5	7.5	5.0	175m	1.5	4.0		A60f
131	TZC7.5,A,B,D								
		5†	7.5	5.0	175m	1.5 †	4.5	175A	A1ey
132	UDZ5707Ø	5	7.5	5.0	175m	1.8		175A	A356b
133	UZ4707	5	7.5	5.0	175m	1.5		175A	A380a
134	UZ5707	5	7.5	5.0	175m	1.5	6.0	175A	A380a
135	ZC7.5	5†	7.5	5.0	175m	1.5		150A	A1ey
136	ZC7.5B	5	7.5	5.0	175m	1.5			A1ey
137	1N5343A	10	7.5	5.0	175m	1.5		200A	A1ee
138	DSZ4807	10	7.5	5.0	175m	1.5		175	A60ae
139	DSZ5807	10	7.5	5.0	175m	2.0	6.0	175A	A60r
140	MZ5807	10	7.5	5.0	175m	1.5	4.0		A60f
141	UDZ5807Ø	10	7.5	5.0	10m	1.8		175A	A356b
142	UZ4807	10	7.5	5.0	175m	1.5		175A	A380a
143	UZ5807	10	7.5	5.0	175m	1.5	6.0	175A	A380a
144	ZC7.5A	10	7.5	5.0	175m	1.5			A1ey
145	1N5343	20	7.5	5.0	175m			200A	A1ee
146	MZ5907	20	7.5	5.0	175m	1.5	4.0		A60f
147	UZ5907	20	7.5	5.0	175m	1.5	6.0	175A	A380a
148	UZ7707L	5	7.5	5.5	325m	0.7	4.0	175	A380c
149	UZ7807L	10	7.5	5.5	325m	0.7	4.0	175	A380c
150	UZ7907L	20	7.5	5.5	325m	0.7	4.0	175	A380c
151	UDZ7707Ø	5	7.5	6.0	325m	900m		175A	A356c
152▼	BZW03/D7V5	10	7.5	6.0	175m	1.5	7.0	175J	A333e
153▼	BZW03/D8V2	10	7.5	6.0	150m	1.5	8.0	175J	A333e
154▼	BZW03/D9V1	10	7.5	6.0	150m	2.0	8.0	175J	A333e
155▼	BZW03/D10	10	7.5	6.0	125m	2.0	9.0	175J	A333e
156▼	BZW03/D11	10	7.5	6.0	125m	2.5	10	175J	A333e
157▼	BZW03/D12	10	7.5	6.0	100m	2.5	10	175J	A333e
158▼	BZW03/D13	10	7.5	6.0	100m	2.5	10	175J	A333e
159▼	BZW03/D15	10	7.5	6.0	75m	2.5	10	175J	A333e
160▼	BZW03/D16	10	7.5	6.0	75m	2.5	11	175J	A333e
161▼	BZW03/D18	10	7.5	6.0	65m	2.5	11	175J	A333e
162▼	BZW03/D20	10	7.5	6.0	65m	3.0	11	175J	A333e
163▼	BZW03/D22	10	7.5	6.0	50m	3.5	11	175J	A333e
164▼	BZW03/D24	10	7.5	6.0	50m	3.5	11	175J	A333e
165▼	BZW03/D27	10	7.5	6.0	50m	5.0	11	175J	A333e
166▼	BZW03/D30	10	7.5	6.0	40m	8.0	11	175J	A333e
167▼	BZW03/D33	10	7.5	6.0	40m	10	11	175J	A333e
168▼	BZW03/D36	10	7.5	6.0	30m	11	11	175J	A333e
169▼	BZW03/D39	10	7.5	6.0	30m	14	11	175J	A333e
170▼	BZW03/D43	10	7.5	6.0	30m	20	12	175J	A333e
171♦	BZW03/D47	10	7.5	6.0	25m	25	12	175J	A333e
172▼	BZW03/D51	10	7.5	6.0	25m	27	12	175J	A333e
173▼	BZW03/D56	10	7.5	6.0	20m	35	12	175J	A333e
174	UDZ7807Ø	10	7.5	6.0	325m	900m		175A	A356c
175	Z3A7.5	1†	7.5	10	50m	300m	5.0	200J	S457Ø
176	1N1806A	5	7.5	10	1.0	1.0		175A	S11Ø
177	1N2971B	5	7.5	10	335m	1.3		175C	DO4Ø
178	1N4000A	5	7.5	10	335m	1.3		175S	DO4
179	1N4195B	5	7.5	10	335m	1.3		200S	DO10
180	1N4259B	5	7.5	10	335m	1.3	4.5	175C	S134
181	1S5007,A	5†	7.5	10	200m	1.5	5.0	150C	DO4
182	1S6007A	5	7.5	10	200m	2.5	4.0	150	DO4
183	MZT2971B	5.0	7.5	10	335m	1.3		150J	Y220AC
184	UZ7707	5	7.5	10	325m	0.7	4.0	175	S277
185	Z3B7.5	5†	7.5	10	50m	300m	5.0	200J	S457Ø
186	1N1806	10	7.5	10	1.0	1.0		175A	DO4Ø
187	1N2971A	10	7.5	10	335m	1.3		175C	DO4Ø
188	1N4000	10	7.5	10	335m	1.3		175S	DO4
189	1N4195A	10	7.5	10	335m	1.3		200S	DO10
190	1N4259A	10	7.5	10	335m	1.3	4.5	175C	S134
191	1S265	10	7.5	10	350m	1.3	4.0	150J	S19g
192	1S6007	10	7.5	10	200m	4.0	4.0	150	DO4
193	C3C7.5Ø	10†	7.5	10	50m	300m	5.0	200J	S457
194	MZT2971A	10	7.5	10	335m	1.3		150J	Y220AC
195	UZ7807	10	7.5	10	325m	0.7	4.0	175	S277
196	1N1806B	20	7.5	10	1	1.0			S11e
197	1N2971	20	7.5	10	335m	1.3		175C	DO4Ø
198	1N4195	20	7.5	10	335m	1.3		200S	DO10
199	1N4259	20	7.5	10	335m	1.3	4.5	175C	S134
200	MZT2971	20	7.5	10	335m	1.3		150J	Y220AC
201	UZ7907	20	7.5	10	325m	0.7	4.0	175	S277
202	BZX98C7V5	5	7.5	12	100m	2.0	7.0	150J	S4af
203	BZY93C7V5	5	7.5	20	2.0	300m	3.0mV	175J	DO4Ø
204	Z7A7.5	1†	7.5	25	2.0	300m	5.0	200J	S457Ø

SYMBOLS AND CODES EXPLAINED IN INTERPRETER

10. VOLTAGE REGULATOR DIODES, POWER - $V_Z \geq 7.5$ V (Cont'd)

IN ORDER OF: (1) REF. VOLTAGE (2) MAX PD MAX (3) TOLERANCE & (4) TYPE NUMBER

LINE No.	4 TYPE NUMBER	3 TOL. ± (%)	1 NOM. REF. VOLT. (V)	2 PD @ 25°C MAX (W)	TEST CUR. Izt (A)	MAX. DYN. IMP. (Ω)	TEMP. COEFF Tc MAX	MAX. TEMP (°C)	DWG. NO.
1	Z7B7.5	5†	7.5	25	2.0	300m	5.0	200J	S457Ø
2	ZX7.5	5	7.5	25	100	2.0	4.0	150J	S441
3	C7C7.5Ø	10†	7.5	25	2.0	300m	5.0	200J	S457
4	1N2805B	5	7.5	50	1.7	300m	4.5	175S	C5a
5	1N3306B	5	7.5	50	1.7	300m		175J	S4w
6	1N4556B	5	7.5	50	1.6	240m		175J	S4w
7	1N4564B	5	7.5	50	1.6	240m	5.7	175J	C5a
8	50T7.5,A,B	5†	7.5	50	1.7	300m	4.5		S19e
9	50Z7.5,A,B	5†	7.5	50	1.7	300m	4.5	175	C5a
10	MZT3306B	5.0	7.5	50	1.7	300m		150J	Y220AC
11	1N2805A	10	7.5	50	1.7	300m	4.5	175S	C5a
12	1N3306A	10	7.5	50	1.7	300m		175J	S4w
13	1N4556A	10	7.5	50	1.6	240m		175J	S4w
14	1N4564A	10	7.5	50	1.6	240m	5.7	175J	C5a
15	MZT3306A	10	7.5	50	1.7	300m		150J	Y220AC
16	1N2805	20	7.5	50	1.7	300m	4.5	175S	C5a
17	1N3306	20	7.5	50	1.7	300m		175J	S4w
18	1N4556	20	7.5	50	1.6	240m		175J	S4w
19	1N4564	20	7.5	50	1.6	240m	5.7	175J	C5a
20	MZT3306	20	7.5	50	1.7	300m		150J	Y220AC
21	Z6A7.5	1†	7.5	75	5.0	200m	5.0	200J	DO5Ø
22	BZY91C7V5	5	7.5	75	5.0	200m	9.0	175J	DO5Ø
23	Z6B7.5	5†	7.5	75	5.0	200m	5.0	200J	DO5Ø
24	C6C7.5Ø	10†	7.5	75	5.0	200m	5.0	200J	DO5
25▼	SZ16-7.7-5-25	5.0	7.7	10	25m			175J	u5d
26▼	SZ16-7.7-10-25	10	7.7	10	25m			175J	u5d
27▼	SZ16-7.7-20-25	20	7.7	10	25m			175J	u5d
28▼	SZ40-7.7-5-25	5.0	7.7	25	25m			175J	u5e
29▼	SZ40-7.7-10-25	10	7.7	25	25m			175J	u5e
30▼	SZ40-7.7-20-25	20	7.7	25	25m			175J	u5e
31	6ALZ7.5A	5	7.8	6.0	175m			170J	A416
32	6ALZ7.5	10	7.8	6.0	175m			170J	A416
33	6ALZ7.5B	20	7.8	6.0	175m			170J	A416
34	50KZ6.5		8.02	50	50m				DO5§
35	50KZ6.5A		8.02	50	50m				DO5§
36	10KZ9.1	10†	8.19	10	150m		.06		DO4§
37	50KZ7.0A		8.19	50	50m				DO5§
38	CTZC8.2CØ	1	8.2	5.0	150m	1.5 †	4.8	175A	A1ey
39	TZC8.2C	1	8.2	5.0	150m	1.5 †	4.8	175A	A1ey
40	CTZC8.2EØ	3	8.2	5.0	150m	1.5 †	4.8	175A	A1ey
41	TZC8.2E	3	8.2	5.0	150m	1.5 †	4.8	175A	A1ey
42	1N4016B	5	8.2	5.0	150m	1.5	6.5	180A	S82
43	1N4956	5	8.2	5.0	150m	1.5		175A	A146m
44	1N5344B	5	8.2	5.0	150m	1.5		200A	A1ee
45	BZV40C8V2	5	8.2	5.0	150m	1.5			A1ee
46	BZV48C8V2	5	8.2	5.0	150m	1.5	4.8	175J	DO27
47	BZV58C8V2	5	8.2	5.0	150m	1.5	4.8	175J	A1ee
48	CTZC8.2,A,B,DØ	5†	8.2	5.0	150m	1.5 †	4.8	175A	A1ey
49	DSZ4708	5	8.2	5.0	150m	1.5		175	A60ae
50	DSZ5708	5	8.2	5.0	150m	2.0	6.0	175A	A60r
51	MZ5708	5	8.2	5.0	150m	1.5	5.0		A60f
52	TZC8.2,A,B,D	5†	8.2	5.0	150m	1.5 †	4.8	175A	A1ey
53	UDZ5708Ø	5	8.2	5.0	150m	1.8		175A	A356b
54	UZ4708	5	8.2	5.0	150m	1.5		175A	A380a
55	UZ5708	5	8.2	5.0	150m	1.5	6.0	175A	A380a
56	ZC8.2	5†	8.2	5.0	150m	1.5		150A	A1ey
57	ZC8.2B	5	8.2	5.0	150m	1.5			A1ey
58	1N4016A	10	8.2	5.0	150m	1.5	6.5	180A	S82
59	1N5344A	10	8.2	5.0	150m	1.5		200A	A1ee
60	DSZ4808	10	8.2	5.0	150m	1.5		175	A60ae
61	DSZ5808	10	8.2	5.0	150m	2.0	6.0	175A	A60r
62	MZ5808	10	8.2	5.0	150m	1.5	5.0		A60f
63	UDZ5808Ø	10	8.2	5.0	175m	1.8		175A	A356b
64	UZ4808	10	8.2	5.0	150m	1.5		175A	A380a
65	UZ5808	10	8.2	5.0	150m	1.5	6.0	175A	A380a
66	ZC8.2A	10	8.2	5.0	150m	1.5			A1ey
67	1N4016	20	8.2	5.0	150m	1.5	6.5	180A	S82
68	1N5344	20	8.2	5.0	150m			200A	A1ee
69	MZ5908	20	8.2	5.0	150m	1.5	5.0		A60f
70	UZ5908	20	8.2	5.0	150m	1.5	6.0	175A	A380a
71	UZ7708L	5	8.2	5.5	300m	0.8	5.0	175	A380c
72	UZ7808L	10	8.2	5.5	300m	0.8	5.0	175	A380c
73	UZ7908L	20	8.2	5.5	300m	0.8	5.0	175	A380c
74	6ALZ8.2A	5	8.2	6.0	150m			170J	A416
75	UDZ7708Ø	5	8.2	6.0	300m	1.0		175A	A356c
76	6ALZ8.2	10	8.2	6.0	150m			170J	A416
77	UDZ7808Ø	10	8.2	6.0	300m	1.0		175A	A356c
78	6ALZ8.2B	20	8.2	6.0	150m			170J	A416
79	D815V	15	8.2	8.0	50m	16 †	8.8	100C	S494
80	Z3A8.2	1†	8.2	10	50m	300m	6.0	200J	S457Ø
81	1N1416	5	8.2	10	200m	3.0 †	5.0	175C	S154
82	1N1603A	5	8.2	10	250m	600m	6.0	200S	DO4
83	1N1807A	5	8.2	10	1.0	1.0		175A	S11Ø
84	1N1891A	5	8.2	10	25m	5.0	4.0	200A	S82
85	1N2972B	5	8.2	10	305m	1.5		175C	DO4Ø
86	1N4196B	5	8.2	10	305m	1.5		200S	DO10
87	1N4260B	5	8.2	10	305m	1.5	4.8	175C	S134
88	1S5008,A	5†	8.2	10	200m	2.0	5.0	150C	DO4
89	1S6008A	5	8.2	10	200m	2.5	4.0	150	DO4
90	MZT2972B	5.0	8.2	10	305m	1.5		150J	Y220AC
91▼	SZ16-8.2-5-25	5.0	8.2	10	25m			175J	u5d
92	UZ7708	5	8.2	10	300m	0.8	5.0	175	S277
93	Z3B8.2	5†	8.2	10	50m	300m	6.0	200J	S457Ø
94	1N1603	10	8.2	10	250m	600m	6.0	200S	DO4
95	1N1807	10	8.2	10	1.0	1.0		175A	DO4Ø
96	1N1891	10	8.2	10	25m	5.0	4.0	200A	S82
97	1N2972A	10	8.2	10	305m	1.5		175C	DO4Ø
98	1N4196A	10	8.2	10	305m	1.5		200S	DO10
99	1N4260A	10	8.2	10	305m	1.5	4.8	175C	S134
100	1S6008	10	8.2	10	200m	2.5	4.0	150	DO4
101	C3C8.2Ø	10†	8.2	10	50m	300m	6.0	200J	S457
102	MZT2972A	10	8.2	10	305m	1.5		150J	Y220AC
103▼	SZ16-8.2-10-25	10	8.2	10	25m			175J	u5d
104	UZ7808	10	8.2	10	300m	0.8	5.0	175	S277
105	1N1807B	20	8.2	10	1	1.0			S11e
106	1N2972	20	8.2	10	305m	1.5		175C	DO4Ø
107	1N4196	20	8.2	10	305m	1.5		200S	DO10
108	1N4260	20	8.2	10	305m	1.5	4.8	175C	S134
109	MZT2972	20	8.2	10	305m	1.5		150J	Y220AC
110▼	SZ16-8.2-20-25	20	8.2	10	25m			175J	u5d
111	UZ7908	20	8.2	10	300m	0.8	5.0	175	S277
112	BZX98C8V2	5	8.2	12	100m	2.0	8.0	150J	S4af
113	BZY93C8V2	5	8.2	20	2.0	300m	4.0mV	175J	DO4Ø
114	Z7A8.2	1†	8.2	25	2.0	300m	6.0	200J	S457Ø
115▼	SZ40-8.2-5-25	5.0	8.2	25	25m			175J	u5e
116	Z7B8.2	5†	8.2	25	2.0	300m	6.0	200J	S457Ø
117	ZX8.2	5	8.2	25	100	2.0	5.0	150J	S441
118	C7C8.2Ø	10†	8.2	25	2.0	300m	6.0	200J	S457
119▼	SZ40-8.2-10-25	10	8.2	25	25m			175J	u5e
120▼	SZ40-8.2-20-25	20	8.2	25	25m			175J	u5e
121	1N2806B	5	8.2	50	1.5	400m	4.8	175S	C5a
122	1N3307B	5	8.2	50	1.5	400m		175J	S4w
123	50T8.2,A,B	5†	8.2	50	1.5	400m	4.8		S19e
124	50Z8.2,A,B	5†	8.2	50	1.5	400m	4.8	175	C5a
125	MZT3307B	5.0	8.2	50	1.5	400m		150J	Y220AC
126	1N2806A	10	8.2	50	1.5	400m	4.8	175S	C5a
127	1N3307A	10	8.2	50	1.5	400m		175J	S4w
128	MZT3307A	10	8.2	50	1.5	400m		150J	Y220AC
129	1N2806	20	8.2	50	1.5	400m	4.8	175S	C5a
130	1N3307	20	8.2	50	1.5	400m		175J	S4w
131	MZT3307	20	8.2	50	1.5	400m		150J	Y220AC
132	Z6A8.2	1†	8.2	75	5.0	300m	6.0	200J	DO5Ø
133	BZY91C8V2	5	8.2	75	5.0	300m	9.0	175J	DO5Ø
134	Z6B8.2	5†	8.2	75	5.0	300m	6.0	200J	DO5Ø
135	C6C8.2Ø	10†	8.2	75	5.0	300m	6.0	200J	DO5
136	80TF8.2,A	5†	8.2	80	1.2	15m	4.0	125C	M117c
137	ZC708	5	8.2	100	2.0	.09		175A	S533
138	RD9DLM		8.4	10	400m	1.8		150J	S19s
139	1S266	10	8.5	10	350m	1.5	4.7	150J	S19g
140	50KZ7.0		8.65	50	50m				DO5§
141	1N5345B	5	8.7	5.0	150m	2.0		200A	A1ee
142	BZV40C8V7	5	8.7	5.0	150m	2.0			A1ee
143	1N5345A	10	8.7	5.0	150m	2.0		200A	A1ee
144	1N5345	20	8.7	5.0	150m			200A	A1ee
145	6ALZ8.7A	5	8.7	6.0	150m			170J	A416
146	6ALZ8.7	10	8.7	6.0	150m			170J	A416
147	6ALZ8.7B	20	8.7	6.0	150m			170J	A416
148	RD9DK		8.7	10	400m	1.8		150J	S19s
149	1N2044	10	8.75	10	1.0	800m		175A	DO4
150	50KZ7.5A		8.77	50	5.0m				DO5§
151	1N4297	5	8.8	10	200m	1.4	1.0	75B	DO4
152	1N4297A	5	8.8	10	200m	1.4	1.0	100B	DO4
153	1N4297B	5	8.8	10	200m	1.4	1.0	150B	DO4
154	1N4298	5	8.8	10	200m	1.4	.50	75B	DO4
155	1N4298A	5	8.8	10	200m	1.4	.50	100B	DO4
156	1N4298B	5	8.8	10	200m	1.4	.50	150B	DO4
157	1N4301	5	8.8	50	1	.60	1.0	75B	DO5
158	1N4301A	5	8.8	50	1	.60	1.0	100B	DO5
159	1N4301B	5	8.8	50	1	.60	1.0	150B	DO5
160	1N4302	5	8.8	50	1	.60	.50	75B	DO5
161	1N4302A	5	8.8	50	1	.60	.50	100B	DO5
162	1N4302B	5	8.8	50	1	.60	.50	150B	DO5
163	10KZ10	10†	9.00	10	125m		.07		DO4§
164	BZY91C9V1	5	9.0	75	2.0	400m	7.0	175J	DO5Ø
165	BZT03C9V1		9.0	600	50m	2.0			A333c
166	1N5346		9.1	5.0	150m	2.0		150	DO27
167	CTZC9.1CØ	1	9.1	5.0	150m	2.0 †	5.1	175A	A1ey
168	TZC9.1C	1	9.1	5.0	150m	2.0 †	5.1	175A	A1ey
169	CTZC9.1EØ	3	9.1	5.0	150m	2.0 †	5.1	175A	A1ey
170	TZC9.1E	3	9.1	5.0	150m	2.0 †	5.1	175A	A1ey
171	1N4017B	5	9.1	5.0	135m	2.0	6.8	180A	S82
172	1N4957	5	9.1	5.0	150m	2.0		175A	A146m
173	BZV40C9V1	5	9.1	5.0	150m	2.0			A1ee
174	BZV48C9V1	5	9.1	5.0	150m	2.0	5.1	175J	DO27
175	BZV58C9V1	5	9.1	5.0	150m	2	5.1	175J	A1ee
176	CTZC9.1,A,B,DØ	5†	9.1	5.0	150m	2.0 †	5.1	175A	A1ey
177	DSZ4709	5	9.1	5.0	150m	2.0		175	A60ae
178	DSZ5709	5	9.1	5.0	150m	2.0	6.0	175A	A60r
179	MZ5709	5	9.1	5.0	150m	2.0	5.0		A60f
180	TZC9.1,A,B,D	5†	9.1	5.0	150m	2.0 †	5.1	175A	A1ey
181	UDZ5709Ø	5	9.1	5.0	150m	2.5		175A	A356b
182	UZ4709	5	9.1	5.0	150m	2.0		175A	A380a
183	UZ5709	5	9.1	5.0	150m	2.0	6.0	175A	A380a
184	ZC9.1	5†	9.1	5.0	150m	2.0		150A	A1ey
185	ZC9.1B	5	9.1	5.0	150m	2.0			A1ey
186	1N4017A	10	9.1	5.0	135m	2.0	6.8	180A	S82
187	1N5346A	10	9.1	5.0	150m	2.0		200A	A1ee
188	DSZ4809	10	9.1	5.0	150m	2.0		175	A60ae
189	DSZ5809	10	9.1	5.0	150m	2.0	6.0	175A	A60r
190	MZ5809	10	9.1	5.0	150m	2.0	5.0		A60f
191	UDZ5809Ø	10	9.1	5.0	150m	2.5		175A	A356b
192	UZ4809	10	9.1	5.0	150m	2.0		175A	A380a
193	UZ5809	10	9.1	5.0	150m	2.0	6.0	175A	A380a
194	ZC9.1A	10	9.1	5.0	150m	2.0			A1ey
195	1N4017	20	9.1	5.0	135m	2.0	6.8	180A	S82
196	MZ5909	20	9.1	5.0	150m	2.0	5.0		A60f
197	UZ5909	20	9.1	5.0	150m	2.0	6.0	175A	A380a
198	UZ7709L	5	9.1	5.5	275m	1.0	5.0	175	A380c
199	UZ7809L	10	9.1	5.5	275m	1.0	5.0	175	A380c
200	UZ7909L	20	9.1	5.5	275m	1.0	5.0	175	A380c
201	6ALZ9.1A	5	9.1	6.0	150m			170J	A416
202	UDZ7709Ø	5	9.1	6.0	275m	1.2		175A	A356c
203	6ALZ9.1	10	9.1	6.0	150m			170J	A416
204	UDZ7809Ø	10	9.1	6.0	275m	1.2		175A	A356c

SYMBOLS AND CODES EXPLAINED IN INTERPRETER

10. VOLTAGE REGULATOR DIODES, POWER - $V_Z \geq 7.5$ V (Cont'd)

IN ORDER OF: (1) REF. VOLTAGE (2) MAX PD MAX (3) TOLERANCE & (4) TYPE NUMBER

LINE No.	4 TYPE NUMBER	3 TOL. ± (%)	1 NOM. REF. VOLT. (V)	2 PD @ 25°C MAX (W)	TEST CUR. Izt (A)	MAX. DYN. IMP. (Ω)	TEMP. COEFF Tc MAX	MAX. TEMP (°C)	DWG. NO.
1	6ALZ9.1B	20	9.1	6.0	150m			170J	A416
2	RD9DMN		9.1	10	400m	1.8		150J	S19s
3	Z3A9.1	1†	9.1	10	50m	500m	6.5	200J	S457Ø
4	1N1808A	5	9.1	10	500m	1.0		175A	S11Ø
5	1N2973B	5	9.1	10	275m	2.0		175C	DO4Ø
6	1N4197B	5	9.1	10	275m	2.0		200S	DO10
7	1N4261B	5	9.1	10	275m	2.0	5.1	175C	S134
8	1S5009,A	5†	9.1	10	200m	2.0	6.0	150C	DO4
9	1S6009A	5	9.1	10	200m	2.5	5.0	150	DO4
10	MZT2973B	5.0	9.1	10	275m	2.0		150J	Y220AC
11	PSZ9.1	5†	9.1	10	100m	4.0 †			S513
12▼	SZ16-9.1-5-1								
		5.0	9.1	10	1.0m			175J	u5d
13▼	SZ16-9.1-5-25								
		5.0	9.1	10	25m			175J	u5d
14	UZ7709	5	9.1	10	275m	1.0	5.0	175	S277
15	Z3B9.1	5†	9.1	10	50m	500m	6.5	200J	S457Ø
16	1N1808	10	9.1	10	500m	1.0		175A	DO4Ø
17	1N2973A	10	9.1	10	275m	2.0		175C	DO4Ø
18	1N4197A	10	9.1	10	275m	2.0		200S	DO10
19	1N4261A	10	9.1	10	275m	2.0	5.1	175C	S134
20	1S6009	10	9.1	10	200m	2.5	5.0	150	DO4
21	C3C9.1Ø	10†	9.1	10	50m	500m	6.5	200J	S457
22	MZT2973A	10	9.1	10	275m	2.0		150J	Y220AC
23▼	SZ16-9.1-10-1								
		10	9.1	10	1.0m			175J	u5d
24▼	SZ16-9.1-10-25								
		10	9.1	10	25m			175J	u5d
25	UZ7809	10	9.1	10	275m	1.0	5.0	175	S277
26	1N1808B	20	9.1	10	500m	1.0			S11e
27	1N2973	20	9.1	10	275m	2.0		175C	DO4Ø
28	1N4197	20	9.1	10	275m	2.0		200S	DO10
29	1N4261	20	9.1	10	275m	2.0	5.1	175C	S134
30▼	SZ16-9.1-20-1								
		20	9.1	10	1.0m			175J	u5d
31▼	SZ16-9.1-20-25								
		20	9.1	10	25m			175J	u5d
32	UZ7909	20	9.1	10	275m	1.0	5.0	175	S277
33	MZT2973	30	9.1	10	275m	2.0		150J	Y220AC
34	BZX98C9V1	5	9.1	12	50m	4.0	8.0	150J	S4af
35	BZY93C9V1	5	9.1	20	1.0	500m	5.0mV	175J	DO4Ø
36	Z7A9.1	1†	9.1	25	1.0	500m	6.5	200J	S457Ø
37▼	SZ40-9.1-5-25								
		5.0	9.1	25	25m			175J	u5e
38	Z7B9.1	5†	9.1	25	1.0	500m	6.5	200J	S457Ø
39	ZX9.1	5	9.1	25	50	4.0	5.0	150J	S441
40	C7C9.1Ø	10†	9.1	25	1.0	500m	6.5	200J	S457
41▼	SZ40-9.1-10-25								
		10	9.1	25	25m			175J	u5e
42▼	SZ40-9.1-20-25								
		20	9.1	25	25m			175J	u5e
43	1N2807B	5	9.1	50	1.3	500m	5.1	175S	C5a
44	1N3308B	5	9.1	50	1.3	500m		175J	S4w
45	50M9.1SZ,5	5†	9.1	50	1.3	500m	5.1	175J	S4y
46	50T9.1,A,B	5†	9.1	50	1.3	.50	5.1		S19e
47	50Z9.1,A,B	5†	9.1	50	1.3	500m	5.1	175	C5a
48	MZT3308B	5.0	9.1	50	1.3	500m		150J	Y220AC
49	1N2807A	10	9.1	50	1.3	500m	5.1	175S	C5a
50	1N3308A	10	9.1	50	1.3	500m		175J	S4w
51	MZT3308A	10	9.1	50	1.3	500m		150J	Y220AC
52	1N2807	20	9.1	50	1.3	500m	5.1	175S	C5a
53	1N3308	20	9.1	50	1.3	500m		175J	S4w
54	MZT3308	20	9.1	50	1.3	500m		150J	Y220AC
55	Z6A9.1	1†	9.1	75	2.0	400m	6.0	200J	DO5Ø
56	Z6B9.1	5†	9.1	75	2.0	400m	6.0	200J	DO5Ø
57	C6C9.1Ø	10†	9.1	75	2.0	400m	6.0	200J	DO5
58	ZC709	5	9.1	100	2.0	.10		175A	S533
59	50KZ7.5		9.26	50	5.0m				DO5§
60	1S267	10	9.5	10	350m	2.0	5.2	150J	S19g
61	50KZ8.0A		9.83	50	5.0m				DO5§
62	50KZ8.5A		9.88	50	5.0m				DO5§
63	10KZ11	10†	9.90	10	125m		.07		DO4§
64	50KZ8.0		9.90	50	5.0m				DO5§
65	1N5347		10	5.0	125m	2.0		150	DO27
66	CTZC10CØ	1	10	5.0	125m	2.0 †	5.5	175A	A1ey
67	TZC10C	1	10	5.0	125m	2.0 †	5.5	175A	A1ey
68	CTZC10EØ	3	10	5.0	125m	2.0 †	5.5	175A	A1ey
69	TZC10E	3	10	5.0	125m	2.0 †	5.5	175A	A1ey
70	1N4018B	5	10	5.0	125m	2.0	7.1	180A	S82
71	1N4958	5	10	5.0	125m	2.0		175A	A146m
72	BZV40C10	5	10	5.0	125m	2.0			A1ee
73	BZV48C10	5	10	5.0	125m	2.0	5.5	175J	DO27
74	BZV58C10	5	10	5.0	125m	2	5.5	175J	A1ee
75	CTZC10,A,B,DØ								
		5†	10	5.0	125m	2.0 †	5.5	175A	A1ey
76	DSZ4710	5	10	5.0	125m	2.0		175	A60ae
77	DSZ5710	5	10	5.0	125m	2.0	7.0	175A	A60r
78	MZ5710	5	10	5.0	125m	2.0	6.0		A60f
79	TZC10,A,B,D								
		5†	10	5.0	125m	2.0 †	5.5	175A	A1ey
80	UDZ5710Ø	5	10	5.0	125m	2.5		175A	A356b
81	UZ4710	5	10	5.0	125m	2.0		175A	A380a
82	UZ5710	5	10	5.0	125m	2.0	7.0	175A	A380a
83	ZC10	5†	10	5.0	125m	2.0		150A	A1ey
84	ZC10B	5	10	5.0	125m	2.0			A1ey
85	1N4018A	10	10	5.0	125m	2.0	7.1	180A	S82
86	DSZ4810	10	10	5.0	125m	2.0		175	A60ae
87	DSZ5810	10	10	5.0	125m	2.0	7.0	175A	A60r
88	MZ5810	10	10	5.0	125m	2.0	6.0		A60f
89	UDZ5810Ø	10	10	5.0	150m	2.5		175A	A356b
90	UZ4810	10	10	5.0	125m	2.0		175A	A380a
91	UZ5810	10	10	5.0	125m	2.0	7.0	175A	A380a
92	ZC10A	10	10	5.0	125m	2.0			A1ey
93	1N4018	20	10	5.0	125m	2.0	7.1	180A	S82
94	MZ5910	20	10	5.0	125m	2.0	6.0		A60f
95	UZ5910	20	10	5.0	125m	2.0	7.0	175A	A380a
96	UZ7710L	5	10	5.5	250m	1.0	6.0	175	A380c
97	UZ7810L	10	10	5.5	250m	1.0	6.0	175	A380c
98	UZ7910L	20	10	5.5	250m	1.0	6.0	175	A380c
99	6ALZ10A	5	10	6.0	125m			170J	A416
100	UDZ7710Ø	5	10	6.0	250m	1.2		175A	A356c
101	1N3776	10	10	6.0	600m	6.0	5.0mV	200J	S82b
102	6ALZ10	10	10	6.0	125m			170J	A416
103	UDZ7810Ø	10	10	6.0	250m	1.2		175A	A356c
104	6ALZ10B	20	10	6.0	125m			170J	A416
105	D815G	15	10	8.0	25m	30 †	10	100C	S494
106	Z3A10	1†	10	10	50m	500m	7.0	200J	S457Ø
107	1N1351A	5	10	10	500m	2.0	6.0	155A	DO4Ø
108	1N1604A	5	10	10	200m	1.0	7.0	200S	DO4
109	1N1892A	5	10	10	25m	6.0	5.8	200A	S82
110	1N2045A	5	10	10	500m	1.5		150A	S19a
111	1N2498A	5	10	10	500m	2.0	6.0	150A	S19a
112	1N2974B	5	10	10	250m	3.0		175C	DO4Ø
113	1N4198B	5	10	10	250m	3.0		200S	DO10
114	1N4262B	5	10	10	250m	3.0	5.5	175C	S134
115	1S5010,A	5†	10	10	200m	2.0	6.0	150C	DO4
116	1S6010A	5	10	10	200m	2.5	5.0	150	DO4
117	MZT2974B	5.0	10	10	250m	3.0		150J	Y220AC
118▼	SZ16-10-5-1								
		5.0	10	10	1.0m			175J	u5d
119▼	SZ16-10-5-25								
		5.0	10	10	25m			175J	u5d
120	UZ7710	5	10	10	250m	1.0	6.0	175	S277
121	Z3B10	5†	10	10	50m	500m	7.0	200J	S457Ø
122	1N1351	10	10	10	500m	2.0	6.0	155A	DO4Ø
123	1N1604	10	10	10	200m	1.0	7.0	200S	DO4
124	1N1892	10	10	10	25m	6.0	5.8	200A	S82
125	1N2498	10	10	10	500m	2.0	6.0	150A	S19a
126	1N2498CØ	10	10	10	500m	2.0	6.0	150A	S19a
127	1N2974A	10	10	10	250m	3.0		175C	DO4Ø
128	1N4198A	10	10	10	250m	3.0		200S	DO10
129	1N4262A	10	10	10	250m	3.0	5.5	175C	S134
130	1S6010	10	10	10	200m	2.5	5.0	150	DO4
131	C3C10Ø	10†	10	10	50m	500m	7.0	200J	S457
132	MZT2974A	10	10	10	250m	3.0		150J	Y220AC
133▼	SZ16-10-10-1								
		10	10	10	1.0m			175J	u5d
134▼	SZ16-10-10-25								
		10	10	10	25m			175J	u5d
135	UZ7810	10	10	10	250m	1.0	6.0	175	S277
136	1N1351B	20	10	10	500m	2.0			S11e
137	1N2974	20	10	10	250m	3.0		175C	DO4Ø
138	1N4198	20	10	10	250m	3.0		200S	DO10
139	1N4262	20	10	10	250m	3.0	5.5	175C	S134
140	MZT2974	20	10	10	250m	3.0		150J	Y220AC
141▼	SZ16-10-20-1								
		20	10	10	1.0m			175J	u5d
142▼	SZ16-10-20-25								
		20	10	10	25m			175J	u5d
143	UZ7910	20	10	10	250m	1.0	6.0	175	S277
144	BZX98C10	5	10	12	50m	4.0	9.0	150J	S4af
145	BZY93C10	5	10	20	1.0	500m	7.0mV	175J	DO4Ø
146	Z7A10	1†	10	25	1.0	500m	7.0	200J	S457Ø
147	Z7B10	5†	10	25	1.0	500m	7.0	200J	S457Ø
148	ZX10	5	10	25	50	4.0	6.0	150J	S441
149	C7C10Ø	10†	10	25	1.0	500m	7.0	200J	S457
150▼	SZ40-10-10-25								
		10	10	25	25m			175J	u5e
151▼	SZ40-10-20-25								
		20	10	25	25m			175J	u5e
152	1N2808B	5	10	50	1.2	600m	5.5	175S	C5a
153	1N3309B	5	10	50	1.2	600m		175J	S4w
154	50T10,A,B	5†	10	50	1.2k	600m	5.5		
155	50Z10,A,B	5†	10	50	1.2	600m	5.5	175	C5a
156	MZT3309B	5.0	10	50	1.2	600m		150J	Y220AC
157	1N2808A	10	10	50	1.2	600m	5.5	175S	C5a
158	1N3309A	10	10	50	1.2	600m		175J	S4w
159	MZT3309A	10	10	50	1.2	600m		150J	Y220AC
160	1N2808	20	10	50	1.2	600m	5.5	175S	C5a
161	1N3309	20	10	50	1.2	600m		175J	S4w
162	MZT3309	20	10	50	1.2	600m		150J	Y220AC
163	Z6A10	1†	10	75	2.0	400m	7.0	200J	DO5Ø
164	BZY91C10	5	10	75	2.0	400m	7.0	175J	DO5Ø
165	Z6B10	5†	10	75	2.0	400m	7.0	200J	DO5Ø
166	C6C10Ø	10†	10	75	2.0	400m	7.0	200J	DO5
167	80TF10,A	5†	10	80	1.0	5.0m	1.0	125C	M117c
168	ZC710	5	10	100	2.0	.10		175A	S533
169	BZT03C10		10	600	50m	2.0			A333c
170	RD11DLM		10.1	10	200m	2.5		150J	S19s
171	50KZ8.5		10.4	50	5.0m				DO5§
172	RD11DK		10.5	10	200m	2.5		150J	S19s
173	1N2045C	5	10.5	10	500m	1.5		150A	S19a
174	1N2045	10	10.5	10	500m	1.5		175A	DO4
175	50KZ9.0A		10.6	50	5.0m				DO5§
176	RD11DMN		10.8	10	200m	2.5		150J	S19s
177	10KZ12	10†	10.8	10	100m		.07		DO4§
178	1N5348		11	5.0	125m	2.5		150	DO27
179	CTZC11CØ	1	11	5.0	125m	2.5 †	6.0	175A	A1ey
180	TZC11C	1	11	5.0	125m	2.5 †	6.0	175A	A1ey
181	CTZC11EØ	3	11	5.0	125m	2.5 †	6.0	175A	A1ey
182	TZC11E	3	11	5.0	125m	2.5 †	6.0	175A	A1ey
183	1N4019B	5	11	5.0	115m	2.5	7.3	180A	S82
184	1N4959	5	11	5.0	120m	2.5		175A	A146m
185	BZV40C11	5	11	5.0	125m	2.5			A1ee
186	BZV48C11	5	11	5.0	125m	2.5	6.0	175J	DO27
187	BZV58C11	5	11	5.0	125m	2.5	6.0	175J	A1ee
188	CTZC11,A,B,DØ								
		5†	11	5.0	125m	2.5 †	6.0	175A	A1ey
189	TZC11,A,B,D								
		5†	11	5.0	125m	2.5 †	6.0	175A	A1ey
190	ZC11	5†	11	5.0	125m	2.5		150A	A1ey
191	ZC11B	5	11	5.0	125m	2.5			A1ey
192	1N4019A	10	11	5.0	115m	2.5	7.3	180A	S82
193	MZ5811	10	11	5.	125m	130	7.0	175J	A60as
194	ZC11A	10	11	5.0	125m	2.5			A1ey
195	1N4019	20	11	5.0	115m	2.5	7.3	180A	S82
196	6ALZ11A	5	11	6.0	125m			170J	A416
197	6ALZ11	10	11	6.0	125m			170J	A416
198	6ALZ11B	20	11	6.0	125m			170J	A416
199	Z3A11	1†	11	10	50m	1.0	7.0	200J	S457Ø

SYMBOLS AND CODES EXPLAINED IN INTERPRETER

10. VOLTAGE REGULATOR DIODES, POWER - $V_Z \geq 7.5$ V (Cont'd)

IN ORDER OF: (1) REF. VOLTAGE (2) MAX PD MAX (3) TOLERANCE & (4) TYPE NUMBER

LINE No.	4 TYPE NUMBER	3 TOL. ± (%)	1 NOM. REF. VOLT. (V)	2 PD @ 25°C MAX (W)	TEST CUR. Izt (A)	MAX. DYN. IMP. (Ω)	TEMP. COEFF Tc MAX	MAX. TEMP (°C)	DWG. NO.
1	1N1352A	5	11	10	500m	2.0	6.0	155A	DO4Ø
2	1N2499A	5	11	10	500m	2.0	6.0	150A	S19a
3	1N2975B	5	11	10	230m	3.0		175C	DO4Ø
4	1N4199B	5	11	10	230m	3.0		200S	DO10
5	1N4263B	5	11	10	230m	3.0	6.0	175C	S134
6	1S5011,A	5†	11	10	200m	3.0	6.0	150C	DO4
7	1S6011A	5	11	10	200m	2.5	5.0	150	DO4
8	MZT2975B	5.0	11	10	230m	3.0		150J	Y220AC
9▼	SZ16-11-5-1								
		5.0	11	10	1.0m			175J	u5d
10▼	SZ16-11-5-25								
		5.0	11	10	25m			175J	u5d
11	Z3B11	5†	11	10	50m	1.0	7.0	200J	S457Ø
12	1N1352	10	11	10	500m	2.0	6.0	155A	DO4Ø
13	1N2499	10	11	10	500m	2.0	6.0	150A	S19a
14	1N2499CØ	10	11	10	500m	2.0	6.0	150A	S19a
15	1N2975A	10	11	10	230m	3.0		175C	DO4Ø
16	1N4199A	10	11	10	230m	3.0		200S	DO10
17	1N4263A	10	11	10	230m	3.0	6.0	175C	S134
18	1S268	10	11	10	250m	3.0	6.3	150J	S19g
19	1S6011	10	11	10	200m	2.5	5.0	150	DO4
20	C3C11Ø	10†	11	10	50m	1.0	7.0	200J	S457
21	MZT2975A	10	11	10	230m	3.0		150J	Y220AC
22▼	SZ16-11-10-1								
		10	11	10	1.0m			175J	u5d
23▼	SZ16-11-10-25								
		10	11	10	25m			175J	u5d
24	1N1352B	20	11	10	500m	2.0			S11e
25	1N2975	20	11	10	230m	3.0		175C	DO4Ø
26	1N4199	20	11	10	230m	3.0		200S	DO10
27	1N4263	20	11	10	230m	3.0	6.0	175C	S134
28	MZT2975	20	11	10	230m	3.0		150J	Y220AC
29▼	SZ16-11-20-1								
		20	11	10	1.0m			175J	u5d
30▼	SZ16-11-20-25								
		20	11	10	25m			175J	u5d
31	BZX98C11	5	11	12	50m	7.0	10	150J	S4af
32	BZY93C11	5	11	20	1.0	1.0	7.5mV	175J	DO4Ø
33	Z7A11	1†	11	25	1.0	1.0	7.0	200J	S457Ø
34▼	SZ40-11-5-25								
		5.0	11	25	25m			175J	u5e
35	Z7B11	5†	11	25	1.0	1.0	7.0	200J	S457Ø
36	ZX11	5	11	25	50	7.0	6.0	150J	S441
37	C7C11Ø	10†	11	25	1.0	1.0	7.0	200J	S457
38▼	SZ40-11-10-25								
		10	11	25	25m			175J	u5e
39▼	SZ40-11-20-25								
		20	11	25	25m			175J	u5e
40	1N2809B	5	11	50	1.1	800m	6.0	175S	C5a
41	1N3310B	5	11	50	1.1	800m		175J	S4w
42	50T11,A,B	5†	11	50	1.1k	800m	6.0		S19e
43	50Z11,A,B	5†	11	50	1.1	800m	6.0	175	C5a
44	MZT3310B	5.0	11	50	1.1	800m		150J	Y220AC
45	1N2809A	10	11	50	1.1	800m	6.0	175S	C5a
46	1N3310A	10	11	50	1.1	800m		175J	S4w
47	MZT3310A	10	11	50	1.1	800m		150J	Y220AC
48	1N2809	20	11	50	1.1	800m	6.0	175S	C5a
49	1N3310	20	11	50	1.1	800m		175J	S4w
50	MZT3310	20	11	50	1.1	800m		150J	Y220AC
51	Z6A11	1†	11	75	2.0	400m	7.0	200J	DO5Ø
52	BZY91C11	5	11	75	2.0	400m	7.0	175J	DO5Ø
53	Z6B11	5†	11	75	2.0	400m	7.0	200J	DO5Ø
54	C6C11Ø	10†	11	75	2.0	400m	7.0	200J	DO5
55	ZC711	5	11	100	2.0	.11		175A	S533
56	BZT03C11		11	600	50m	4.0			A333c
57	50KZ9.0		11.1	50	5.0m				DO5§
58	1N4299	5	11.3	10	150m	1.6	1.0	75B	DO4
59	1N4299A	5	11.3	10	150m	1.6	1.0	100B	DO4
60	1N4299B	5	11.3	10	150	1.6	1.0	150B	DO4
61	1N4300	5	11.3	10	150	1.6	.50	75B	DO4
62	1N4300A	5	11.3	10	150m	1.6	.50	100B	DO4
63	1N4300B	5	11.3	10	150m	1.6	.50	150B	DO4
64	1N4303	5	11.3	50	750m	.80	1.0	75B	DO5
65	1N4303A	5	11.3	50	750m	.80	1.0	100B	DO5
66	1N4303B	5	11.3	50	750m	.80	1.0	150B	DO5
67	1N4304	5	11.3	50	750m	.80	.50	75B	DO5
68	1N4304A	5	11.3	50	750m	.80	.50	100B	DO5
69	1N4304B	5	11.3	50	750m	.80	.50	150B	DO5
70	10KZ13	10†	11.7	10	100m		.08		DO4§
71	50KZ10A		11.7	50	5.0m				DO5§
72	1N5349		12	5.0	100m	2.5		150	DO27
73	CTZC12CØ	1	12	5.0	100m	2.5 †	6.5	175A	A1ey
74	TZC12C	1	12	5.0	100m	2.5 †	6.5	175A	A1ey
75	CTZC12EØ	3	12	5.0	100m	2.5 †	6.5	175A	A1ey
76	TZC12E	3	12	5.0	100m	2.5 †	6.5	175A	A1ey
77	1N4020B	5	12	5.0	105m	2.5	7.6	180A	S82
78	1N4960	5	12	5.0	100m	2.5		175A	A146m
79	1N4960D	5	12	5.0	100m	2.5		175A	A146m
80	BZV40C12	5	12	5.0	100m	2.5			A1ee
81	BZV48C12	5	12	5.0	100m	2.5	6.5	175J	DO27
82	BZV58C12	5	12	5.0	100m	2.5	6.5	175J	A1ee
83	CTZC12,A,B,DØ								
		5†	12	5.0	100m	2.5 †	6.5	175A	A1ey
84	DSZ4712	5	12	5.0	100m	2.5		175	A60ae
85	DSZ5712	5	12	5.0	100m	2.5	7.0	175A	A60r
86	MZ5712	5	12	5.0	100m	2.5	7.0	175A	A60f
87	TZC12,A,B,D								
		5†	12	5.0	100m	2.5 †	6.5	175A	A1ey
88	UDZ5712Ø	5	12	5.0	100m	2.5		175A	A356b
89	UZ4712	5	12	5.0	100m	2.5		175A	A380a
90	UZ5712	5	12	5.0	100m	2.5	7.0	175A	A380a
91	ZC12	5†	12	5.0	100m	2.5		150A	A1ey
92	ZC12B	5	12	5.0	100m	2.5			A1ey
93	1N4020A	10	12	5.0	105m	2.5	7.6	180A	S82
94	1N5349A	10	12	5.0	100m	2.5		200A	A1ee
95	DSZ4812	10	12	5.0	100m	2.5		175	A60ae
96	DSZ5812	10	12	5.0	100m	2.5	7.0	175A	A60r
97	MZ5812	10	12	5.0	100m	2.5	7.0	175A	A60f
98	UDZ5812Ø	10	12	5.0	125m	2.5		175A	A356b
99	UZ4812	10	12	5.0	100m	2.5		175A	A380a
100	UZ5812	10	12	5.0	100m	2.5	7.0	175A	A380a
101	ZC12A	10	12	5.0	100m	2.5			A1ey
102	1N4020	20	12	5.0	105m	2.5	7.6	180A	S82
103	MZ5912	20	12	5.0	100m	2.5	7.0	175A	A60f
104	UZ5912	20	12	5.0	100m	2.5	7.0	175A	A380a
105	UZ7712L	5	12	5.5	200m	1.3	7.0	175	A380c
106	UZ7812L	10	12	5.5	200m	1.3	7.0	175	A380c
107	UZ7912L	20	12	5.5	200m	1.3	7.0	175	A380c
108	6ALZ12A	5	12	6.0	100m			170J	A416
109	UDZ7712Ø	5	12	6.0	200m	1.3		175A	A356c
110	6ALZ12	10	12	6.0	100m			170J	A416
111	UDZ7812Ø	10	12	6.0	200m	1.3		175A	A356c
112	6ALZ12B	20	12	6.0	100m			170J	A416
113	D815D	15	12	8.0	25m	40 †	11	100C	S494
114	Z3A12	1†	12	10	50m	1.0	7.5	200J	S457Ø
115	1N1353A	5	12	10	500m	2.0	6.0	155A	DO4Ø
116	1N1417	5	12	10	200m	3.5 †	6.0	175C	S154
117	1N1605A	5	12	10	170m	2.0	7.5	200S	DO4
118	1N1893A	5	12	10	25m	7.0	5.9	200A	S82
119	1N2500A	5	12	10	500m	2.0	6.0	150A	S19a
120	1N2976B	5	12	10	210m	3.0		175C	DO4Ø
121	1N4200B	5	12	10	210m	3.0		200S	DO10
122	1N4264B	5	12	10	210m	3.0	6.5	175C	S134
123	1S5012,A	5†	12	10	200m	3.0	7.0	150C	DO4
124	1S6012A	5	12	10	200m	2.5	5.5	150	DO4
125	MZT2976B	5.0	12	10	210m	3.0		150J	Y220AC
126	PSZ12	5†	12	10	100m	4.0 †			S513
127▼	SZ16-12-5-1								
		5.0	12	10	1.0m			175J	u5d
128▼	SZ16-12-5-25								
		5.0	12	10	25m			175J	u5d
129	UZ7712	5	12	10	200m	1.3	7.0	175	S277
130	Z3B12	5†	12	10	50m	1.0	7.5	200J	S457Ø
131	1N1353	10	12	10	500m	2.0	6.0	155A	DO4Ø
132	1N1605	10	12	10	170m	2.0	7.5	200S	DO4
133	1N1893	10	12	10	25m	7.0	5.9	200A	S82
134	1N2500	10	12	10	500m	2.0	6.0	150A	S19a
135	1N2500CØ	10	12	10	500m	2.0	6.0	150A	S19a
136	1N2976A	10	12	10	210m	3.0		175C	DO4Ø
137	1N4200A	10	12	10	210m	3.0		200S	DO10
138	1N4264A	10	12	10	210m	3.0	6.5	175C	S134
139	1S269	10	12	10	250m	3.0	6.6	150J	S19g
140	1S6012	10	12	10	200m	2.5	5.5	150	DO4
141	C3C12Ø	10†	12	10	50m	1.0	7.5	200J	S457
142	MZT2976A	10	12	10	210m	3.0		150J	Y220AC
143▼	SZ16-12-10-1								
		10	12	10	1.0m			175J	u5d
144▼	SZ16-12-10-25								
		10	12	10	25m			175J	u5d
145	UZ7812	10	12	10	200m	1.3	7.0	175	S277
146	1N1353B	20	12	10	500m	2.0			S11e
147	1N2976	20	12	10	210m	3.0		175C	DO4Ø
148	1N4200	20	12	10	210m	3.0		200S	DO10
149	1N4264	20	12	10	210m	3.0	6.5	175C	S134
150	MZT2976	20	12	10	210m	3.0		150J	Y220AC
151▼	SZ16-12-20-1								
		20	12	10	1.0m			175J	u5d
152▼	SZ16-12-20-25								
		20	12	10	25m			175J	u5d
153	UZ7912	20	12	10	200m	1.3	7.0	175	S277
154	BZX98C12	5	12	12	50m	7.0	10	150J	S4af
155	BZY93C12	5	12	20	1.0	1.0	8.0mV	175J	DO4Ø
156	Z7A12	1†	12	25	1.0	1.0	7.5	200J	S457Ø
157▼	SZ40-12-5-25								
		5.0	12	25	25m			175J	u5e
158	Z7B12	5†	12	25	1.0	1.0	7.5	200J	S457Ø
159	ZX12	5	12	25	50	7.0	6.0	150J	S441
160	C7C12Ø	10†	12	25	1.0	1.0	7.5	200J	S457
161▼	SZ40-12-10-25								
		10	12	25	25m			175J	u5e
162▼	SZ40-12-20-25								
		20	12	25	25m			175J	u5e
163	1N2810B	5	12	50	1.0	1.0	6.5	175S	C5a
164	1N3311B	5	12	50	1.0	1.0		175J	S4w
165	50T12,A,B	5†	12	50	1.0	1.0	6.5		S19e
166	50Z12,A,B	5†	12	50	1.0	1.0	6.5	175	C5a
167	MZT3311B	5.0	12	50	1.0	1.0		150J	Y220AC
168	1N2810A	10	12	50	1.0	1.0	6.5	175S	C5a
169	1N3311A	10	12	50	1.0	1.0		175J	S4w
170	MZT3311A	10	12	50	1.0	1.0		150J	Y220AC
171	1N2810	20	12	50	1.0	1.0	6.5	175S	C5a
172	1N3311	20	12	50	1.0	1.0		175J	S4w
173	MZT3311	20	12	50	1.0	1.0		150J	Y220AC
174	Z6A12	1†	12	75	2.0	500m	7.0	200J	DO5Ø
175	BZY91C12	5	12	75	2.0	500m	7.0	175J	DO5Ø
176	Z6B12	5†	12	75	2.0	500m	7.0	200J	DO5Ø
177	C6C12Ø	10†	12	75	2.0	500m	7.0	200J	DO5
178	80TF12,A	5†	12	80	830m	6.0m	1.0	125C	M117c
179	ZC712	5	12	100	2.0	.12		175A	S533
180	BZT03C12		12	600	50m	4.0			A333c
181	RD13DLM		12.3	10	200m	2.5		150J	S19s
182	50KZ10		12.4	50	5.0m				DO5§
183	RD13DK		12.7	10	200m	2.5		150J	S19s
184	1N2046	10	12.7	10	500m	2.0		175A	DO4
185	50KZ11A		12.9	50	5.0m				DO5§

$V_Z \geq 13$ V

189	CTZC13CØ	1	13	5.0	100m	2.5 †	6.5	175A	A1ey
190	TZC13C	1	13	5.0	100m	2.5 †	6.5	175A	A1ey
191	CTZC13EØ	3	13	5.0	100m	2.5 †	6.5	175A	A1ey
192	TZC13E	3	13	5.0	100m	2.5 †	6.5	175A	A1ey
193	1N4021B	5	13	5.0	95m	3.0	7.9	180A	S82
194	1N4961	5	13	5.0	100m	3.0		175A	A146m
195	1N5350B	5	13	5.0	100m	2.5		200A	A1ee
196	BZV40C13	5	13	5.0	100m	3.0			A1ee
197	BZV48C13	5	13	5.0	100m	2.5	6.5	175J	DO27
198	BZV58C13	5	13	5.0	100m	2.5	6.5	175J	A1ee
199	CTZC13,A,B,DØ								
		5†	13	5.0	100m	2.5 †	6.5	175A	A1ey

SYMBOLS AND CODES EXPLAINED IN INTERPRETER

10. VOLTAGE REGULATOR DIODES, POWER - $V_Z \geq 13$ V (Cont'd)

IN ORDER OF: (1) REF. VOLTAGE (2) MAX PD MAX (3) TOLERANCE & (4) TYPE NUMBER

LINE No.	4 TYPE NUMBER	3 TOL. ± (%)	1 NOM. REF. VOLT. (V)	2 PD @ 25°C MAX (W)	TEST CUR. Izt (A)	MAX. DYN. IMP. (Ω)	TEMP. COEFF Tc MAX	MAX. TEMP (°C)	DWG. NO.
1	DSZ4713	5	13	5.0	100m	3.0		175	A60ae
2	DSZ5713	5	13	5.0	100m	3.0	8.0	175A	A60r
3	MZ5713	5	13	5.0	100m	3.0	7.0	175A	A60f
4	TZC13,A,B,D	5†	13	5.0	100m	2.5 †	6.5	175A	A1ey
5	UZ4713	5	13	5.0	100m	3.0		175A	A380a
6	UZ5713	5	13	5.0	100m	3.0	8.0	175A	A380a
7	ZC13	5†	13	5.0	100m	2.5		150A	A1ey
8	ZC13B	5	13	5.0	100m	2.5			A1ey
9	1N4021A	10	13	5.0	95m	3.0	7.9	180A	S82
10	1N5350A	10	13	5.0	100m	2.5		200A	A1ee
11	DSZ4813	10	13	5.0	100m	3.0		175	A60ae
12	DSZ5813	10	13	5.0	100m	3.0	8.0	175A	A60r
13	MZ5813	10	13	5.0	100m	3.0	7.0	175A	A60f
14	UZ4813	10	13	5.0	100m	3.0		175A	A380a
15	UZ5813	10	13	5.0	100m	3.0	8.0	175A	A380a
16	ZC13A	10	13	5.0	100m	2.5			A1ey
17	1N4021	20	13	5.0	95m	3.0	7.9	180A	S82
18	1N5350	20	13	5.0	100m			200A	A1ee
19	MZ5913	20	13	5.0	100m	3.0	7.0	175A	A60f
20	UZ5913	20	13	5.0	100m	3.0	8.0	175A	A380a
21	UZ7713L	5	13	5.5	200m	1.5	7.0	175	A380c
22	UZ7813L	10	13	5.5	200m	1.5	7.0	175	A380a
23	UZ7913L	20	13	5.5	200m	1.5	7.0	175	A380c
24	6ALZ13A	5	13	6.0	100m			170J	A416
25	6ALZ13	10	13	6.0	100m			170J	A416
26	6ALZ13B	20	13	6.0	100m			170J	A416
27	Z3A13	1†	13	10	50m	1.0	7.5	200J	S457Ø
28	1N1354A	5	13	10	500m	2.0	7.0	155A	DO4Ø
29	1N1816A§	5	13	10	500m	2.0	7.0	150A	S19a
30	1N2977B	5	13	10	190m	3.0		175C	DO4Ø
31	1N4201B	5	13	10	190m	3.0		200S	DO10
32	1N4265B	5	13	10	190m	3.0	6.5	175C	S134
33	1S5013,A	5†	13	10	200m	3.0	7.0	150C	DO4
34	1S6013A	5	13	10	200m	2.5	5.5	150	DO4
35	MZT2977B	5.0	13	10	190m	3.0		150J	Y220AC
36▼	SZ16-13-5-1	5.0	13	10	1.0m			175J	u5d
37▼	SZ16-13-5-25	5.0	13	10	25m			175J	u5d
38	UZ7713	5	13	10	200m	1.5	7.0	175	S277
39	Z3B13	5†	13	10	50m	1.0	7.5	200J	S457Ø
40	1N1354	10	13	10	500m	2.0	7.0	155A	DO4Ø
41	1N1816§	10	13	10	500m	2.0	7.0	150A	S19a
42	1N1816CØ	10	13	10	500m	2.0	7.0	150A	S19a
43	1N2977A	10	13	10	190m	3.0		175C	DO4Ø
44	1N4201A	10	13	10	190m	3.0		200S	DO10
45	1N4265A	10	13	10	190m	3.0	6.5	175C	S134
46	1S270	10	13	10	250m	3.0	6.9	150J	S19g
47	1S6013	10	13	10	200m	4.0	5.5	150	DO4
48	C3C13Ø	10†	13	10	50m	1.0	7.5	200J	S457
49	MZT2977A	10	13	10	190m	3.0		150J	Y220AC
50▼	SZ16-13-10-1	10	13	10	1.0m			175J	u5d
51▼	SZ16-13-10-25	10	13	10	25m			175J	u5d
52	UZ7813	10	13	10	200m	1.5	7.0	175	S277
53	1N1354B	20	13	10	500m	2.0			S11e
54	1N2977	20	13	10	190m	3.0		175C	DO4Ø
55	1N4201	20	13	10	190m	3.0		200S	DO10
56	1N4265	20	13	10	190m	3.0	6.5	175C	S134
57	MZT2977	20	13	10	190m	3.0		150J	Y220AC
58▼	SZ16-13-20-1	20	13	10	1.0m			175J	u5d
59▼	SZ16-13-20-25	20	13	10	25m			175J	u5d
60	UZ7913	20	13	10	200m	1.5	7.0	175	S277
61	BZX98C13	5	13	12	50m	10	10	150J	S4af
62	BZY93C13	5	13	20	1.0	1.0	8.5mV	175J	DO4Ø
63	Z7A13	1†	13	25	1.0	1.0	7.5	200J	S457Ø
64▼	SZ40-13-5-25	5.0	13	25	25m			175J	u5e
65	Z7B13	5†	13	25	1.0	1.0	7.5	200J	S457Ø
66	ZX13	5	13	25	50	10	6.0	150J	S441
67	C7C13Ø	10†	13	25	1.0	1.0	7.5	200J	S457
68▼	SZ40-13-10-25	10	13	25	25m			175J	u5e
69▼	SZ40-13-20-25	20	13	25	25m			175J	u5e
70	1N2811B	5	13	50	960m	1.1	6.5	175S	C5a
71	1N3312B	5	13	50	960m	1.1		175J	S4w
72	50T13,A,B	5†	13	50	960m	1.1	6.5		S19e
73	50Z13,A,B	5†	13	50	960m	1.1	6.5	175	C5a
74	MZT3312B	5.0	13	50	960m	1.1		150J	Y220AC
75	1N2811A	10	13	50	960m	1.1	6.5	175S	C5a
76	1N3312A	10	13	50	960m	1.1		175J	S4w
77	MZT3312A	10	13	50	960m	1.1		150J	Y220AC
78	1N2811	20	13	50	960m	1.1	6.5	175S	C5a
79	1N3312	20	13	50	960m	1.1		175J	S4w
80	MZT3312	20	13	50	960m	1.1		150J	Y220AC
81	Z6A13	1†	13	75	2.0	500m	7.0	200J	DO5Ø
82	BZY91C13	5	13	75	2.0	500m	7.0	175J	DO5Ø
83	Z6B13	5†	13	75	2.0	500m	7.0	200J	DO5Ø
84	C6C13Ø	10†	13	75	2.0	500m	7.0	200J	DO5
85	ZC713	5	13	100	2.0	.13		175A	S533
86	BZT03C13		13	600	50m	5.0			A333c
87	RD13DMN		13.1	10	200m	2.5		150J	S19s
88	10KZ15	10†	13.5	10	75m		.08		DO4§
89	50KZ11		13.6	50	5.0m				DO5§
90	CTZC14CØ	1	14	5.0	100m	2.5 †	7.0	175A	A1ey
91	TZC14C	1	14	5.0	100m	2.5 †	7.0	175A	A1ey
92	CTZC14EØ	3	14	5.0	100m	2.5 †	7.0	175A	A1ey
93	TZC14E	3	14	5.0	100m	2.5 †	7.0	175A	A1ey
94	1N5118	5	14	5.0	100m	3.0		175A	A146m
95	1N5351B	5	14	5.0	100m	2.5		200A	A1ee
96	BZV40C14	5	14	5.0	100m	3.5			A1ee
97	CTZC14,A,B,DØ	5†	14	5.0	100m	2.5 †	7.0	175A	A1ey
98	DSZ5714	5	14	5.0	100m	3.0	8.0	175A	A60r
99	MZ5714	5	14	5.0	100m	3.0	7.0	175A	A60f
100	TZC14,A,B,D	5†	14	5.0	100m	2.5 †	7.0	175A	A1ey
101	UZ5714	5	14	5.0	100m	3.0	8.0	175A	A380a
102	ZC14	5†	14	5.0	100m	2.5		150A	A1ey
103	ZC14B	5	14	5.0	100m	2.5			A1ey
104	1N5351A	10	14	5.0	100m	2.5		200A	A1ee
105	DSZ5814	10	14	5.0	100m	3.0	8.0	175A	A60r
106	MZ5814	10	14	5.0	100m	3.0	7.0	175A	A60f
107	UZ5814	10	14	5.0	100m	3.0	8.0	175A	A380a
108	ZC14A	10	14	5.0	100m	2.5			A1ey
109	1N5351	20	14	5.0	100m			200A	A1ee
110	MZ5914	20	14	5.0	100m	3.0	7.0	175A	A60f
111	UZ5914	20	14	5.0	100m	3.0	8.0	175A	A380a
112	UZ7714L	5	14	5.5	175m	1.5	7.0	175	A380c
113	UZ7814L	10	14	5.5	175m	1.5	7.0	175	A380a
114	UZ7914L	20	14	5.5	175m	1.5	7.0	175	A380c
115	6ALZ14A	5	14	6.0	100m			170J	A416
116	6ALZ14	10	14	6.0	100m			170J	A416
117	6ALZ14B	20	14	6.0	100m			170J	A416
118	1N2978B	5	14	10	180m	3.0	7.0	175S	DO4
119	1N4202B	5	14	10	180m	3.0		200S	DO10
120	MZT2978B	5.0	14	10	180m	3.0		150J	Y220AC
121▼	SZ16-14-5-1	5.0	14	10	1.0m			175J	u5d
122▼	SZ16-14-5-25	5.0	14	10	25m			175J	u5d
123	UZ7714	5	14	10	175m	1.5	7.0	175	S277
124	1N2978A	10	14	10	180m	3.0	7.0	175S	DO4
125	1N4202A	10	14	10	180m	3.0		200S	DO10
126	1S271	10	14	10	250m	3.0	7.1	150J	S19g
127	MZT2978A	10	14	10	180m	3.0		150J	Y220AC
128▼	SZ16-14-10-1	10	14	10	1.0m			175J	u5d
129▼	SZ16-14-10-25	10	14	10	25m			175J	u5d
130	UZ7814	10	14	10	175m	1.5	7.0	175	S277
131	1N2978	20	14	10	180m	3.0	7.0	175S	DO4
132	1N4202	20	14	10	180m	3.0		200S	DO10
133	MZT2978	20	14	10	180m	3.0		150J	Y220AC
134▼	SZ16-14-20-1	20	14	10	1.0m			175J	u5d
135▼	SZ16-14-20-25	20	14	10	25m			175J	u5d
136	UZ7914	20	14	10	175m	1.5	7.0	175	S277
137▼	SZ40-14-5-25	5.0	14	25	25m			175J	u5e
138▼	SZ40-14-10-25	10	14	25	25m			175J	u5e
139▼	SZ40-14-20-25	20	14	25	25m			175J	u5e
140	50KZ12A		14	50	5.0m				DO5§
141	1N2812B	5	14	50	890m	1.2	7.0	175S	C5a
142	1N3313B	5	14	50	890m	1.2		175J	S4w
143	50Z14,A,B	5†	14	50	890m	1.2	6.5	175	C5a
144	MZT3313B	5.0	14	50	890m	1.2		150J	Y220AC
145	1N2812A	10	14	50	890m	1.2	7.0	175S	C5a
146	1N3313A	10	14	50	890m	1.2		175J	S4w
147	MZT3313A	10	14	50	890m	1.2		150J	Y220AC
148	1N2812	20	14	50	890m	1.2	7.0	175S	C5a
149	1N3313	20	14	50	890m	1.2		175J	S4w
150	MZT3313	20	14	50	890m	1.2		150J	Y220AC
151	10KZ16	10†	14.4	10	75m		.08		DO4§
152	50KZ12		14.8	50	5.0m				DO5§
153	CTZC15CØ	1	15	5.0	75m	2.5 †	7.0	175A	A1ey
154	TZC15C	1	15	5.0	75m	2.5 †	7.0	175A	A1ey
155	CTZC15EØ	3	15	5.0	75m	2.5 †	7.0	175A	A1ey
156	TZC15E	3	15	5.0	75m	2.5 †	7.0	175A	A1ey
157	1N4022B	5	15	5.0	85m	3.0	8.2	180A	S82
158	1N4962	5	15	5.0	75m	3.5		175A	A146m
159	1N5352B	5	15	5.0	75m	2.5		200A	A1ee
160	BZV40C15	5	15	5.0	75m	3.5			A1ee
161	BZV48C15	5	15	5.0	75m	2.5	7.0	175J	DO27
162	BZV58C15	5	15	5.0	75m	2.5	7.0	175J	A1ee
163	CTZC15,A,B,DØ	5†	15	5.0	75m	2.5 †	7.0	175A	A1ey
164	DSZ4715	5	15	5.0	75m	3.5		175	A60ae
165	DSZ5715	5	15	5.0	75m	3.5	8.0	175A	A60r
166	MZ5715	5	15	5.0	75m	3.5	7.0	175A	A60f
167	TZC15,A,B,D	5†	15	5.0	75m	2.5 †	7.0	175A	A1ey
168	UDZ5715Ø	5	15	5.0	75m	3.5		175A	A356b
169	UZ4715	5	15	5.0	75m	3.5		175A	A380a
170	UZ5715	5	15	5.0	75m	3.5	8.0	175A	A380a
171	ZC15	5†	15	5.0	75m	2.5		150A	A1ey
172	ZC15B	5	15	5.0	75m	2.5			A1ey
173	1N4022A	10	15	5.0	85m	3.0	8.2	180A	S82
174	1N5352A	10	15	5.0	75m	2.5		200A	A1ee
175	DSZ4815	10	15	5.0	75m	3.5		175	A60ae
176	DSZ5815	10	15	5.0	75m	3.5	8.0	175A	A60r
177	MZ5815	10	15	5.0	75m	3.5	7.0	175A	A60f
178	UDZ5815Ø	10	15	5.0	100m	3.5		175A	A356b
179	UZ4815	10	15	5.0	75m	3.5		175A	A380a
180	UZ5815	10	15	5.0	75m	3.5	8.0	175A	A380a
181	ZC15A	10	15	5.0	75m	2.5			A1ey
182	1N4022	20	15	5.0	85m	3.0	8.2	180A	S82
183	1N5352	20	15	5.0	75m			200A	A1ee
184	MZ5915	20	15	5.0	75m	3.5	7.0	175A	A60f
185	UZ5915	20	15	5.0	75m	3.5	8.0	175A	A380a
186	UZ7715L	5	15	5.5	150m	2.0	7.0	175	A380c
187	UZ7815L	10	15	5.5	150m	2.0	7.0	175	A380a
188	UZ7915L	20	15	5.5	150m	2.0	7.0	175	A380c
189	6ALZ15A	5	15	6.0	75m			170J	A416
190	UDZ7715Ø	5	15	6.0	150m	2.0		175A	A356c
191	6ALZ15	10	15	6.0	75m			170J	A416
192	UDZ7815Ø	10	15	6.0	150m	2.0		175A	A356c
193	6ALZ15B	20	15	6.0	75m			170J	A416
194	D815E	15	15	8.0	25m	50 †	13	100C	S494
195	Z3A15	1†	15	10	50m	1.2	8.0	200J	S457Ø
196	1N1355A	5	15	10	500m	2.0	7.0	155A	DO4Ø
197	1N1418	5	15	10	100m	4.0 †	7.0	175C	S154

SYMBOLS AND CODES EXPLAINED IN INTERPRETER

10. VOLTAGE REGULATOR DIODES, POWER - $V_Z \geq 13$ V (Cont'd)

IN ORDER OF: (1) REF. VOLTAGE (2) MAX PD MAX (3) TOLERANCE & (4) TYPE NUMBER

LINE No.	4 TYPE NUMBER	3 TOL. ± (%)	1 NOM. REF. VOLT. (V)	2 PD @ 25°C MAX (W)	TEST CUR. Izt (A)	MAX. DYN. IMP. (Ω)	TEMP. COEFF Tc MAX	MAX. TEMP (°C)	DWG. NO.
1	1N1606A	5	15	10	140m	2.9	8.0	200S	DO4
2	1N1817A	5	15	10	500m	2.0	7.0	150A	S19a
3	1N1894A	5	15	10	25m	8.0	6.0	200A	S82
4	1N2979B	5	15	10	170m	3.0		175C	DO4Ø
5	1N4203B	5	15	10	170m	3.0		200S	DO10
6	1N4266B	5	15	10	170m	3.0	7.0	175C	S134
7	1S5015,A	5†	15	10	50m	5.0	8.0	150C	DO4
8	1S6015A	5	15	10	100m	5.0	6.0	150	DO4
9	MZT2979B	5.0	15	10	170m	3.0		150J	Y220AC
10	PSZ15	5†	15	10	100m	4.0 †			S513
11▼	SZ16-15-5-1	5.0	15	10	1.0m			175J	u5d
12▼	SZ16-15-5-25	5.0	15	10	25m			175J	u5d
13	UZ7715	5	15	10	150m	2.0	7.0	175	S277
14	Z3B15	5†	15	10	50m	1.2	8.0	200J	S457Ø
15	1N1355	10	15	10	500m	2.0	7.0	155A	DO4Ø
16	1N1606	10	15	10	140m	2.9	8.0	200S	DO4
17	1N1817	10	15	10	500m	2.0	7.0	150A	S19a
18	1N1817CØ	10	15	10	500m	2.0	7.0	150A	S19a
19	1N1894	10	15	10	25m	8.0	6.0	200A	S82
20	1N2979A	10	15	10	170m	3.0		175C	DO4Ø
21	1N4203A	10	15	10	170m	3.0		200S	DO10
22	1N4266A	10	15	10	170m	3.0	7.0	175C	S134
23	1S272	10	15	10	250m	3.0	7.3	150J	S19g
24	1S5015CØ	10	15	10	50m	5.0	8.0	150C	DO4
25	1S6015	10	15	10	100m	5.0	6.0	150	DO4
26	C3C15Ø	10†	15	10	50m	1.2	8.0	200J	S457
27	MZT2979A	10	15	10	170m	3.0		150J	Y220AC
28▼	SZ16-15-10-1	10	15	10	1.0m			175J	u5d
29▼	SZ16-15-10-25	10	15	10	25m			175J	u5d
30	UZ7815	10	15	10	150m	2.0	7.0	175	S277
31	1N1355B	20	15	10	500m	2.0			S11e
32	1N2979	20	15	10	170m	3.0		175C	DO4Ø
33	1N4203	20	15	10	170m	3.0		200S	DO10
34	1N4266	20	15	10	170m	3.0	7.0	175C	S134
35	MZT2979	20	15	10	170m	3.0		150J	Y220AC
36▼	SZ16-15-20-1	20	15	10	1.0m			175J	u5d
37▼	SZ16-15-20-25	20	15	10	25m			175J	u5d
38	UZ7915	20	15	10	150m	2.0	7.0	175	S277
39	BZX98C15	5	15	12	50m	10	10	150J	S4af
40	BZY93C15	5	15	20	1.0	1.2	10mV	175J	DO4Ø
41	Z7A15	1†	15	25	1.0	1.2	8.0	200J	S457Ø
42	SZ15B	5	15	25	100m	3.0	7.0	150B	S16
43▼	SZ40-15-5-25	5.0	15	25	25m			175J	u5e
44	Z7B15	5†	15	25	1.0	1.2	8.0	200J	S457Ø
45	ZX15	5	15	25	50	10	7.0	150J	S441
46	C7C15Ø	10†	15	25	1.0	1.2	8.0	200J	S457
47▼	SZ40-15-10-25	10	15	25	25m			175J	u5e
48▼	SZ40-15-20-25	20	15	25	25m			175J	u5e
49	1N2813B	5	15	50	830m	1.4	7.0	175S	C5a
50	1N3314B	5	15	50	830m	1.4		175J	S4w
51	50T15,A,B	5†	15	50	830m	1.4	7.0		S19e
52	50Z15,A,B	5†	15	50	830m	1.4	7.0	175	C5a
53	MZT3314B	5.0	15	50	830m	1.4		150J	Y220AC
54	1N2813A	10	15	50	830m	1.4	7.0	175S	C5a
55	1N3314A	10	15	50	830m	1.4		175J	S4w
56	MZT3314A	10	15	50	830m	1.4		150J	Y220AC
57	1N2813	20	15	50	830m	1.4	7.0	175S	C5a
58	1N3314	20	15	50	830m	1.4		175J	S4w
59	MZT3314	20	15	50	830m	1.4		150J	Y220AC
60	Z6A15	1†	15	75	2.0	600m	8.0	200J	DO5Ø
61	BZY91C15	5	15	75	2.0	600m	7.5	175J	DO5Ø
62	Z6B15	5†	15	75	2.0	600m	8.0	200J	DO5Ø
63	C6C15Ø	10†	15	75	2.0	600m	8.0	200J	DO5
64	80TF15,A	5†	15	80	670m	8.0m	1.0	125C	M117c
65	ZC715	5	15	100	100	2.0	6.7	175J	S125dØ
66	BZT03C15		15	600	50m	5.0			A333c
67	50KZ13A		15.2	50	5.0m				DO5§
68	RD16DLM		15.3	10	200m	3.0		150J	S19s
69	RD16DK		15.7	10	200m	3.0		150J	S19s
70	1N2047	10	15.7	10	500m	3.0		175A	DO4
71	1N4023B	5	16	5.0	80m	3.0	8.3	180A	S82
72	1N4963	5	16	5.0	75m	3.5		175A	A146m
73	1N5353B	5	16	5.0	75m	2.5		200A	A1ee
74	BZV40C16	5	16	5.0	75m	3.5			A1ee
75	BZV48C16	6	16	5.0	75m	2.5	7.0	175J	DO27
76	BZV58C16	5	16	5.0	75m	2.5	7.0	175J	A1ee
77	DSZ4716	5	16	5.0	75m	3.5		175	A60ae
78	DSZ5716	5	16	5.0	75m	3.5	8.0	175A	A60r
79	MZ5716	5	16	5.0	75m	3.5	7.0	175A	A60f
80	UZ4716	5	16	5.0	75m	3.5		175A	A380a
81	UZ5716	5	16	5.0	75m	3.5	8.0	175A	A380a
82	1N4023A	10	16	5.0	80m	3.0	8.3	180A	S82
83	1N5353A	10	16	5.0	75m	2.5		200A	A1ee
84	DSZ4816	10	16	5.0	75m	3.5		175	A60ae
85	DSZ5816	10	16	5.0	75m	3.5	8.0	175A	A60r
86	MZ5816	10	16	5.0	75m	3.5	7.0	175A	A60f
87	THZ016B10	10	16	5.0	250u	200		175J	u5
88	UZ4816	10	16	5.0	75m	3.5		175A	A380a
89	UZ5816	10	16	5.0	75m	3.5	8.0	175A	A380a
90	1N4023	20	16	5.0	80m	3.0	8.3	180A	S82
91	1N5353	20	16	5.0	75m			200A	A1ee
92	MZ5916	20	16	5.0	75m	3.5	7.0	175A	A60f
93	UZ5916	20	16	5.0	75m	3.5	8.0	175A	A380a
94	UZ7716L	5	16	5.5	150m	2.5	7.0	175	A380c
95	UZ7816L	10	16	5.5	150m	2.5	7.0	175	A380a
96	UZ7916L	20	16	5.5	150m	2.5	7.0	175	A380c
97	6ALZ16A	5	16	6.0	75m			170J	A416
98	6ALZ16	10	16	6.0	75m			170J	A416
99	6ALZ16B	20	16	6.0	75m			170J	A416
100	Z3A16	1†	16	10	50m	1.2	8.0	200J	S457Ø
101	1N1356A	5	16	10	500m	3.0	7.0	155A	DO4Ø
102	1N1818A	5	16	10	500m	3.0	7.0	150A	S19a
103	1N2980B	5	16	10	155m	4.0		175C	DO4Ø
104	1N4204B	5	16	10	155m	4.0		200S	DO10
105	1N4267B	5	16	10	155m	4.0	7.0	175C	S134
106	1S5016,A	5†	16	10	50m	5.0	8.0	150C	DO4
107	1S6016A	5	16	10	100m	5.0	6.0	150	DO4
108	MZT2980B	5.0	16	10	155m	4.0		150J	Y220AC
109	PSZ16	5†	16	10	100m	4.0 †			S513
110▼	SZ16-16-5-1	5.0	16	10	1.0m			175J	u5d
111▼	SZ16-16-5-25	5.0	16	10	25m			175J	u5d
112	UZ7716	5	16	10	150m	2.5	7.0	175	S277
113	Z3B16	5†	16	10	50m	1.2	8.0	200J	S457Ø
114	1N1356	10	16	10	500m	3.0	7.0	155A	DO4Ø
115	1N1818	10	16	10	500m	3.0	7.0	150A	S19a
116	1N1818CØ	10	16	10	500m	3.0	7.0	150A	S19a
117	1N2980A	10	16	10	155m	4.0		175C	DO4Ø
118	1N4204A	10	16	10	155m	4.0		200S	DO10
119	1N4267A	10	16	10	155m	4.0	7.0	175C	S134
120	1S273	10	16	10	170m	4.0	7.5	150J	S19g
121	1S5016CØ	10	16	10	50m	5.0	8.0	150C	DO4
122	1S6016	10	16	10	100m	5.0	6.0	150	DO4
123	C3C16Ø	10†	16	10	50m	1.2	8.0	200J	S457
124	MZT2980A	10	16	10	155m	4.0		150J	Y220AC
125▼	SZ16-16-10-1	10	16	10	1.0m			175J	u5d
126▼	SZ16-16-10-25	10	16	10	25m			175J	u5d
127	UZ7816	10	16	10	150m	2.5	7.0	175	S277
128	1N1356B	20	16	10	500m	3.0			S11e
129	1N2980	20	16	10	155m	4.0		175C	DO4Ø
130	1N4204	20	16	10	155m	4.0		200S	DO10
131	1N4267	20	16	10	155m	4.0	7.0	175C	S134
132	MZT2980	20	16	10	155m	4.0		150J	Y220AC
133▼	SZ16-16-20-1	20	16	10	1.0m			175J	u5d
134▼	SZ16-16-20-25	20	16	10	25m			175J	u5d
135	UZ7916	20	16	10	150m	2.5	7.0	175	S277
136	BZX98C16	5	16	12	25m	15	11	150J	S4af
137	BZY93C16	5	16	20	500m	1.2	11mV	175J	DO4Ø
138	Z7A16	1†	16	25	500m	1.2	8.0	200J	S457Ø
139▼	SZ40-16-5-25	5.0	16	25	25m			175J	u5e
140	Z7B16	5†	16	25	500m	1.2	8.0	200J	S457Ø
141	ZX16	5	16	25	25	15	7.0	150J	S441
142	C7C16Ø	10†	16	25	500m	1.2	8.0	200J	S457
143▼	SZ40-16-10-25	10	16	25	25m			175J	u5e
144▼	SZ40-16-20-25	20	16	25	25m			175J	u5e
145	50KZ13		16	50	5.0m				DO5§
146	1N2814B	5	16	50	780m	1.6	7.0	175S	C5a
147	1N3315B	5	16	50	780m	1.6		175J	S4w
148	50T16,A,B	5†	16	50	.78	1.6	7.0		S19e
149	50Z16,A,B	5†	16	50	780m	1.6	7.0	175	C5a
150	MZT3315B	5.0	16	50	780m	1.6		150J	Y220AC
151	1N2814A	10	16	50	780m	1.6	7.0	175S	C5a
152	1N3315A	10	16	50	780m	1.6		175J	S4w
153	MZT3315A	10	16	50	780m	1.6		150J	Y220AC
154	1N2814	20	16	50	780m	1.6	7.0	175S	C5a
155	1N3315	20	16	50	780m	1.6		175J	S4w
156	MZT3315	20	16	50	780m	1.6		150J	Y220AC
157	Z6A16	1†	16	75	2.0	600m	8.0	200J	DO5Ø
158	BZY91C16	5	16	75	2.0	600m	7.5	175J	DO5Ø
159	Z6B16	5†	16	75	2.0	600m	8.0	200J	DO5Ø
160	C6C16Ø	10†	16	75	2.0	600m	8.0	200J	DO5
161	ZC716	5	16	100	100	2.0	7.0	175J	S125dØ
162	BZT03C16		16	600	25m	6.0			A333c
163	10KZ18	10†	16.2	10	65m		.08		DO4§
164	RD16DMN		16.3	10	200m	3.0		150J	S19s
165	50KZ14A		16.4	50	5.0m				DO5§
166	CTZC17CØ	1	17	5.0	70m	2.5 †	7.5	175A	A1ey
167	TZC17C	1	17	5.0	70m	2.5 †	7.5	175A	A1ey
168	CTZC17EØ	3	17	5.0	70m	2.5 †	7.5	175A	A1ey
169	TZC17E	3	17	5.0	70m	2.5 †	7.5	175A	A1ey
170	1N5354B	5	17	5.0	70m	2.5		200A	A1ee
171	BZV40C17	5	17	5.0	70m	4.0			A1ee
172	CTZC17,A,B,DØ	5†	17	5.0	70m	2.5 †	7.5	175A	A1ey
173	TZC17,A,B,D	5†	17	5.0	70m	2.5 †	7.5	175A	A1ey
174	ZC17	5†	17	5.0	70m	2.5		150A	A1ey
175	ZC17B	5	17	5.0	70m	2.5			A1ey
176	1N5354A	10	17	5.0	70m	2.5		200A	A1ee
177	ZC17A	10	17	5.0	70m	2.5			A1ey
178	1N5354	20	17	5.0	70m			200A	A1ee
179	6ALZ17A	5	17	6.0	70m			170J	A416
180	6ALZ17	10	17	6.0	70m			170J	A416
181	6ALZ17B	20	17	6.0	70m			170J	A416
182	1N2981B	5	17	10	145m	4.0	7.5	175S	DO4
183	1N4205B	5	17	10	145m	4.0		200S	DO10
184▼	SZ16-17-5-1	5.0	17	10	1.0m			175J	u5d
185▼	SZ16-17-5-25	5.0	17	10	25m			175J	u5d
186	1N2981A	10	17	10	145m	4.0	7.5	175S	DO4
187	1N4205A	10	17	10	145m	4.0		200S	DO10
188	1S274	10	17	10	170m	4.0	7.6	150J	S19g
189▼	SZ16-17-10-1	10	17	10	1.0m			175J	u5d
190▼	SZ16-17-10-25	10	17	10	25m			175J	u5d
191	1N2981	20	17	10	145m	4.0	7.5	175S	DO4
192	1N4205	20	17	10	145m	4.0		200S	DO10
193▼	SZ16-17-20-1	20	17	10	1.0m			175J	u5d
194▼	SZ16-17-20-25	20	17	10	25m			175J	u5d

SYMBOLS AND CODES EXPLAINED IN INTERPRETER

10. VOLTAGE REGULATOR DIODES, POWER - $V_Z \geq 13$ V (Cont'd)

IN ORDER OF: (1) REF. VOLTAGE (2) MAX PD MAX (3) TOLERANCE & (4) TYPE NUMBER

LINE No.	4 TYPE NUMBER	3 TOL. ± (%)	1 NOM. REF. VOLT. (V)	2 PD @ 25°C MAX (W)	TEST CUR. Izt (A)	MAX. DYN. IMP. (Ω)	TEMP. COEFF Tc MAX	MAX. TEMP (°C)	DWG. NO.
1▼	SZ40-17-5-25								
		5.0	17	25	25m			175J	u5e
2▼	SZ40-17-10-25								
		10	17	25	25m			175J	u5e
3▼	SZ40-17-20-25								
		20	17	25	25m			175J	u5e
4	1N2815B	5	17	50	740m	1.8	7.5	175S	C5a
5	1N3316B	5	17	50	740m	1.8		175J	S4w
6	50Z17,A,B	5†	17	50	740m	1.8	7.0	175	C5a
7	MZT3316B	5.0	17	50	740m	1.8		150J	Y220AC
8	1N2815A	10	17	50	740m	1.8	7.5	175S	C5a
9	1N3316A	10	17	50	740m	1.8		175J	S4w
10	MZT3316A	10	17	50	740m	1.8		150J	Y220AC
11	1N2815	20	17	50	740m	1.8	7.5	175S	C5a
12	1N3316	20	17	50	740m	1.8		175J	S4w
13	MZT3316	20	17	50	740m	1.8		150J	Y220AC
14	50KZ14		17.4	50	5.0m				DO5§
15	50KZ15A		17.6	50	5.0m				DO5§
	$V_Z \geq 18$ V								
19	CTZC18CØ	1	18	5.0	65m	2.5 †	7.5	175A	A1ey
20	TZC18C	1	18	5.0	65m	2.5 †	7.5	175A	A1ey
21	CTZC18EØ	3	18	5.0	65m	2.5 †	7.5	175A	A1ey
22	TZC18E	3	18	5.0	65m	2.5 †	7.5	175A	A1ey
23	1N4024B	5	18	5.0	70m	4.0	8.5	180A	S82
24	1N4964	5	18	5.0	65m	4.0		175A	A146m
25	1N5355B	5	18	5.0	65m	2.5		200A	A1ee
26	BZV40C18	5	18	5.0	65m	4.0			A1ee
27	BZV48C18	5	18	5.0	65m	2.5	7.5	175J	DO27
28	BZV58C18	5	18	5.0	65m	2.5	7.5	175J	A1ee
29	CTZC18,A,B,DØ								
		5†	18	5.0	65m	2.5 †	7.5	175A	A1ey
30	DSZ4718	5	18	5.0	65m	4.0		175	A60ae
31	DSZ5718	5	18	5.0	65m	4.0	8.5	175A	A60r
32	MZ5718	5	18	5.0	65m	4.0	8.0	175A	A60f
33	TZC18,A,B,D								
		5†	18	5.0	65m	2.5 †	7.5	175A	A1ey
34	UDZ5718Ø	5	18	5.0	65m	4.0		175A	A356b
35	UZ4718	5	18	5.0	65m	4.0		175A	A380a
36	UZ5718	5	18	5.0	65m	4.5	8.5	175A	A380a
37	ZC18	5†	18	5.0	65m	2.5		150A	A1ey
38	ZC18B	5	18	5.0	65m	2.5			A1ey
39	1N4024A	10	18	5.0	70m	4.0	8.5	180A	S82
40	1N5355A	10	18	5.0	65m	2.5		200A	A1ee
41	DSZ4818	10	18	5.0	65m	4.0		175	A60ae
42	DSZ5818	10	18	5.0	65m	4.0	8.5	175A	A60r
43	MZ5818	10	18	5.0	65m	4.0	8.0	175A	A60f
44	UDZ5818Ø	10	18	5.0	65m	4.0		175A	A356b
45	UZ4818	10	18	5.0	65m	4.0		175A	A380a
46	UZ5818	10	18	5.0	65m	4.5	8.5	175A	A380a
47	ZC18A	10	18	5.0	65m	2.5			A1ey
48	1N4024	20	18	5.0	70m	4.0	8.5	180A	S82
49	1N5355	20	18	5.0	65m			200A	A1ee
50	MZ5918	20	18	5.0	65m	4.0	8.0	175A	A60f
51	UZ5918	20	18	5.0	65m	4.0	8.5	175A	A380a
52	UZ7718L	5	18	5.5	130m	3.5	8.0	175	A380c
53	UZ7818L	10	18	5.5	130m	3.5	8.0	175	A380a
54	UZ7918L	20	18	5.5	130m	3.5	8.0	175	A380c
55	6ALZ18A	5	18	6.0	65m			170J	A416
56	UDZ7718Ø	5	18	6.0	130m	3.5		175A	A356c
57	6ALZ18	10	18	6.0	65m			170J	A416
58	UDZ7818Ø	10	18	6.0	130m	3.5		175A	A356c
59	6ALZ18B	20	18	6.0	65m			170J	A416
60	D815SZ	15	18	8.0	25m	60 †	14	100C	S494
61	Z3A18	1†	18	10	50m	1.5	8.0	200J	S457Ø
62	1N1357A	5	18	10	500m	3.0	7.0	155A	DO4Ø
63	1N1419	5	18	10	100m	5.0 †	8.0	175C	S154
64	1N1607A	5	18	10	110m	4.0	8.5	200S	DO4
65	1N1819A	5	18	10	500m	3.0	7.0	150A	S19a
66	1N1895A	5	18	10	25m	9.0	6.2	200A	S82
67	1N2982B	5	18	10	140m	4.0		175C	DO4Ø
68	1N4206B	5	18	10	140m	4.0		200S	DO10
69	1N4268B	5	18	10	140m	4.0	7.5	175C	S134
70	1S5018,A	5†	18	10	50m	5.0	8.0	150C	DO4
71	1S6018A	5	18	10	100m	5.0	6.0	150	DO4
72	MZT2982B	5.0	18	10	140m	4.0		150J	Y220AC
73▼	SZ16-18-5-1								
		5.0	18	10	1.0m			175J	u5d
74▼	SZ16-18-5-25								
		5.0	18	10	25m			175J	u5d
75	UZ7718	5	18	10	130m	3.5	8.0	175	S277
76	Z3B18	5†	18	10	50m	1.5	8.0	200J	S457Ø
77	1N1357	10	18	10	500m	3.0	7.0	155A	DO4Ø
78	1N1607	10	18	10	110m	4.0	8.5	200S	DO4
79	1N1819	10	18	10	500m	3.0	7.0	150A	S19a
80	1N1819CØ	10	18	10	500m	3.0	7.0	150A	S19a
81	1N1895	10	18	10	25m	9.0	6.2	200A	S82
82	1N2982A	10	18	10	140m	4.0		175C	DO4Ø
83	1N4206A	10	18	10	140m	4.0		200S	DO10
84	1N4268A	10	18	10	140m	4.0	7.5	175C	S134
85	1S275	10	18	10	170m	4.0	7.7	150J	S19g
86	1S5018CØ	10	18	10	50m	5.0	8.0	150C	DO4
87	1S6018	10	18	10	100m	5.0	6.0	150	DO4
88	10KZ20	10†	18	10	65m		.08		DO4§
89	C3C18Ø	10†	18	10	50m	1.5	8.0	200J	S457
90	MZT2982A	10	18	10	140m	4.0		150J	Y220AC
91▼	SZ16-18-10-1								
		10	18	10	1.0m			175J	u5d
92▼	SZ16-18-10-25								
		10	18	10	25m			175J	u5d
93	UZ7818	10	18	10	130m	3.5	8.0	175	S277
94	1N1357B	20	18	10	150m	3.0			S11e
95	1N2982	20	18	10	140m	4.0		175C	DO4Ø
96	1N4206	20	18	10	140m	4.0		200S	DO10
97	1N4268	20	18	10	140m	4.0	7.5	175C	S134
98	MZT2982	20	18	10	140m	4.0		150J	Y220AC
99▼	SZ16-18-20-1								
		20	18	10	1.0m			175J	u5d
100▼	SZ16-18-20-25								
		20	18	10	25m			175J	u5d
101	UZ7918	20	18	10	130m	3.5	8.0	175	S277
102	BZX98C18	5	18	12	25m	15	11	150J	S4af
103	BZY93C18	5	18	20	500m	1.5	12mV	175J	DO4Ø
104	Z7A18	1†	18	25	500m	1.5	8.0	200J	S457Ø
105▼	SZ40-18-5-25								
		5.0	18	25	25m			175J	u5e
106	Z7B18	5†	18	25	500m	1.5	8.0	200J	S457Ø
107	ZX18	5	18	25	25	15	7.0	150J	S441
108	C7C18Ø	10†	18	25	500m	1.5	8.0	200J	S457
109▼	SZ40-18-10-25								
		10	18	25	25m			175J	u5e
110▼	SZ40-18-20-25								
		20	18	25	25m			175J	u5e
111	1N2816B	5	18	50	700m	2.0	7.5	175S	C5a
112	1N3317B	5	18	50	700m	2.0		175J	S4w
113	50T18,A,B	5†	18	50	.70	2.0	7.5		S19e
114	50Z18,A,B	5†	18	50	700m	2.0	7.5	175	C5a
115	MZT3317B	5.0	18	50	700m	2.0		150J	Y220AC
116	1N2816A	10	18	50	700m	2.0	7.5	175S	C5a
117	1N3317A	10	18	50	700m	2.0		175J	S4w
118	MZT3317A	10	18	50	700m	2.0		150J	Y220AC
119	1N2816	20	18	50	700m	2.0	7.5	175S	C5a
120	1N3317	20	18	50	700m	2.0		175J	S4w
121	MZT3317	20	18	50	700m	2.0		150J	Y220AC
122	Z6A18	1†	18	75	2.0	700m	8.0	200J	DO5Ø
123	BZY91C18	5	18	75	2.0	700m	7.5	175J	DO5Ø
124	Z6B18	5†	18	75	2.0	700m	8.0	200J	DO5Ø
125	C6C18Ø	10†	18	75	2.0	700m	8.0	200J	DO5
126	80TF18,A	5†	18	80	.56	9.0m	1.0	125C	M117c
127	ZC718	5	18	100	100	2.0	7.4	175J	S125dØ
128	BZT03C18		18	600	25m	6.0			A333c
129	50KZ15		18.6	50	5.0m				DO5§
130	50KZ16A		18.8	50	5.0m				DO5§
131	CTZC19CØ	1	19	5.0	65m	3.0 †	7.5	175A	A1ey
132	TZC19C	1	19	5.0	65m	3.0 †	7.5	175A	A1ey
133	CTZC19EØ	3	19	5.0	65m	3.0 †	7.5	175A	A1ey
134	TZC19E	3	19	5.0	65m	3.0 †	7.5	175A	A1ey
135	1N5356B	5	19	5.0	65m	3.0		200A	A1ee
136	BZV40C19	5	19	5.0	65m	4.5			A1ee
137	CTZC19,A,B,DØ								
		5†	19	5.0	65m	3.0 †	7.5	175A	A1ey
138	TZC19,A,B,D								
		5†	19	5.0	65m	3.0 †	7.5	175A	A1ey
139	ZC19	5†	19	5.0	65m	3.0		150A	A1ey
140	ZC19B	5	19	5.0	65m	3.0			A1ey
141	1N5356A	10	19	5.0	65m	3.0		200A	A1ee
142	ZC19A	10	19	5.0	65m	3.0			A1ey
143	1N5356	20	19	5.0	65m			200A	A1ee
144	6ALZ19A	5	19	6.0	65m			170J	A416
145	6ALZ19	10	19	6.0	65m			170J	A416
146	6ALZ19B	20	19	6.0	65m			170J	A416
147	RD19DK		19.0	10	200m	3.0		150J	S19s
148	RD19DLM		19.0	10	200m	3.0		150J	S19s
149	1N2983B	5	19	10	130m	4.0	7.5	175S	DO4
150	1N4207B	5	19	10	130m	4.0		200S	DO10
151	MZT2983B	5.0	19	10	130m	4.0		150J	Y220AC
152	1N2048	10	19	10	500m	3.0		175A	DO4
153	1N2983A	10	19	10	130m	4.0	7.5	175S	DO4
154	1N4207A	10	19	10	130m	4.0		200S	DO10
155	1S276	10	19	10	170m	4.0	7.9	150J	S19g
156	MZT2983A	10	19	10	130m	4.0		150J	Y220AC
157	1N2983	20	19	10	130m	4.0	7.5	175S	DO4
158	1N4207	20	19	10	130m	4.0		200S	DO10
159	MZT2983	20	19	10	130m	4.0		150J	Y220AC
160	1N2817B	5	19	50	660m	2.2	7.5	175S	C5a
161	1N3318B	5	19	50	660m	2.2		175J	S4w
162	50Z19,A,B	5†	19	50	660m	2.2	7.5	175	C5a
163	MZT3318B	5.0	19	50	660m	2.2		150J	Y220AC
164	1N2817A	10	19	50	660m	2.2	7.5	175S	C5a
165	1N3318A	10	19	50	660m	2.2		175J	S4w
166	MZT3318A	10	19	50	660m	2.2		150J	Y220AC
167	1N2817	20	19	50	660m	2.2	7.5	175S	C5a
168	1N3318	20	19	50	660m	2.2		175J	S4w
169	MZT3318	20	19	50	660m	2.2		150J	Y220AC
170	10KZ22	10†	19.8	10	50m		.08		DO4§
171	50KZ16		19.8	50	5.0m				DO5§
172	50KZ17A		19.9	50	5.0m				DO5§
173	CTZC20CØ	1	20	5.0	65m	3.0 †	7.5	175A	A1ey
174	TZC20C	1	20	5.0	65m	3.0 †	7.5	175A	A1ey
175	CTZC20EØ	3	20	5.0	65m	3.0 †	7.5	175A	A1ey
176	TZC20E	3	20	5.0	65m	3.0 †	7.5	175A	A1ey
177	1N4025B	5	20	5.0	65m	4.0	8.6	180A	S82
178	1N4965	5	20	5.0	65m	4.5		175A	A146m
179	1N5357B	5	20	5.0	65m	3.0		200A	A1ee
180	BZV40C20	5	20	5.0	65m	4.5			A1ee
181	BZV48C20	5	20	5.0	65m	3.0	7.5	175J	DO27
182	BZV58C20	5	20	5.0	65m	3	7.5	175J	A1ee
183	CTZC20,A,B,DØ								
		5†	20	5.0	65m	3.0 †	7.5	175A	A1ey
184	DSZ4720	5	20	5.0	65m	4.5		175	A60ae
185	DSZ5720	5	20	5.0	65m	4.5	8.5	175A	A60r
186	MZ5720	5	20	5.0	65m	4.5	8.0	175A	A60f
187	TZC20,A,B,D								
		5†	20	5.0	65m	3.0 †	7.5	175A	A1ey
188	UDZ5720Ø	5	20	5.0	65m	4.5		175A	A356b
189	UZ4720	5	20	5.0	65m	4.5		175A	A380a
190	UZ5720	5	20	5.0	65m	4.5	8.5	175A	A380a
191	ZC20	5†	20	5.0	65m	3.0		150A	A1ey
192	ZC20B	5	20	5.0	65m	3.0			A1ey
193	1N4025A	10	20	5.0	65m	4.0	8.6	180A	S82
194	1N5357A	10	20	5.0	65m	3.0		200A	A1ee
195	DSZ4820	10	20	5.0	65m	4.5		175	A60ae
196	DSZ5820	10	20	5.0	65m	4.5	8.5	175A	A60r
197	MZ5820	10	20	5.0	65m	4.5	8.0	175A	A60f
198	UDZ5820Ø	10	20	5.0	65m	4.5		175A	A356b
199	UZ4820	10	20	5.0	65m	4.5		175A	A380a
200	UZ5820	10	20	5.0	65m	4.5	8.5	175A	A380a
201	ZC20A	10	20	5.0	65m	3.0			A1ey

SYMBOLS AND CODES EXPLAINED IN INTERPRETER

10. VOLTAGE REGULATOR DIODES, POWER - $V_Z \geq 18$ V (Cont'd)

IN ORDER OF: (1) REF. VOLTAGE (2) MAX PD MAX (3) TOLERANCE & (4) TYPE NUMBER

LINE No.	4 TYPE NUMBER	3 TOL. ± (%)	1 NOM. REF. VOLT. (V)	2 PD @ 25°C MAX (W)	TEST CUR. Izt (A)	MAX. DYN. IMP. (Ω)	TEMP. COEFF Tc MAX	MAX. TEMP (°C)	DWG. NO.
1	1N4025	20	20	5.0	65m	4.0	8.6	180A	S82
2	1N5357	20	20	5.0	65m			200A	A1ee
3	MZ5920	20	20	5.0	65m	4.5	8.0	175A	A60f
4	UZ5920	20	20	5.0	65m	4.5	8.5	175A	A380a
5	UZ7720L	5	20	5.5	120m	4.0	8.0	175	A380c
6	UZ7820L	10	20	5.5	120m	4.0	8.0	175	A380a
7	UZ7920L	20	20	5.5	120m	4.0	8.0	175	A380c
8	6ALZ20A	5	20	6.0	65m			170J	A416
9	UDZ7720Ø	5	20	6.0	120m	4.0		175A	A356c
10	6ALZ20	10	20	6.0	65m			170J	A416
11	UDZ7820Ø	10	20	6.0	120m	4.0		175A	A356c
12	6ALZ20B	20	20	6.0	65m			170J	A416
13	Z3A20	1†	20	10	50m	1.5	8.5	200J	S457Ø
14	1N1358A	5	20	10	150m	3.0	8.0	155A	DO4Ø
15	1N1820A	5	20	10	250m	3.0	8.0	150A	S19a
16	1N2984B	5	20	10	125m	4.0		175C	DO4Ø
17	1N3949	5	20	10	250m	3.0	8.0	175S	DO4
18	1N4208B	5	20	10	125m	4.0		200S	DO10
19	1N4269B	5	20	10	125m	4.0	7.5	175C	S134
20	1S5020,A	5†	20	10	50m	5.0	8.0	150C	DO4
21	1S6020A	5	20	10	100m	5.0	6.0	150	DO4
22	MZT2984B	5.0	20	10	125m	4.0		150J	Y220AC
23▼	SZ16-20-5-1	5.0	20	10	1.0m			175J	u5d
24▼	SZ16-20-5-25	5.0	20	10	25m			175J	u5d
25	UZ7720	5	20	10	120m	4.0	8.0	175	S277
26	Z3B20	5†	20	10	50m	1.5	8.5	200J	S457Ø
27	1N1358	10	20	10	150m	3.0	8.0	155A	DO4Ø
28	1N1820	10	20	10	250m	3.0	8.0	150A	S19a
29	1N1820CØ	10	20	10	250m	3.0	8.0	150A	S19a
30	1N2984A	10	20	10	125m	4.0		175C	DO4Ø
31	1N4208A	10	20	10	125m	4.0		200S	DO10
32	1N4269A	10	20	10	125m	4.0	7.5	175C	S134
33	1S277	10	20	10	170m	4.0	8.0	150J	S19g
34	1S5020CØ	10	20	10	50m	5.0	8.0	150C	DO4
35	1S6020	10	20	10	100m	5.0	6.0	150	DO4
36	C3C20Ø	10†	20	10	50m	1.5	8.5	200J	S457
37	MZT2984A	10	20	10	125m	4.0		150J	Y220AC
38▼	SZ16-20-10-1	10	20	10	1.0m			175J	u5d
39▼	SZ16-20-10-25	10	20	10	25m			175J	u5d
40	UZ7820	10	20	10	120m	4.0	8.0	175	S277
41	1N1358B	20	20	10	150m	3.0			S11e
42	1N2984	20	20	10	125m	4.0		175C	DO4Ø
43	1N4208	20	20	10	125m	4.0		200S	DO10
44	1N4269	20	20	10	125m	4.0	7.5	175C	S134
45	MZT2984	20	20	10	125m	4.0		150J	Y220AC
46▼	SZ16-20-20-1	20	20	10	1.0m			175J	u5d
47▼	SZ16-20-20-25	20	20	10	25m			175J	u5d
48	UZ7920	20	20	10	120m	4.0	8.0	175	S277
49	BZX98C20	5	20	12	25m	15	11	150J	S4af
50	BZY93C20	5	20	20	500m	1.5	14mV	175J	DO4Ø
51	Z7A20	1†	20	25	500m	1.5	8.5	200J	S457Ø
52▼	SZ40-20-5-25	5.0	20	25	25m			175J	u5e
53	Z7B20	5†	20	25	500m	1.5	8.5	200J	S457Ø
54	ZX20	5	20	25	25	15	7.0	150J	S441
55	C7C20Ø	10†	20	25	500m	1.5	8.5	200J	S457
56▼	SZ40-20-10-25	10	20	25	25m			175J	u5e
57▼	SZ40-20-20-25	20	20	25	25m			175J	u5e
58	1N2818B	5	20	50	630m	2.4	7.5	175S	C5a
59	1N3319B	5	20	50	630m	2.4		175J	S4w
60	50T20,A,B	5†	20	50	.63	2.4	7.5		S19e
61	50Z20,A,B	5†	20	50	630m	2.4	7.5	175	C5a
62	MZT3319B	5.0	20	50	630m	2.4		150J	Y220AC
63	1N2818A	10	20	50	630m	2.4	7.5	175S	C5a
64	1N3319A	10	20	50	630m	2.4		175J	S4w
65	MZT3319A	10	20	50	630m	2.4		150J	Y220AC
66	1N2818	20	20	50	630m	2.4	7.5	175S	C5a
67	1N3319	20	20	50	630m	2.4		175J	S4w
68	MZT3319	20	20	50	630m	2.4		150J	Y220AC
69	Z6A20	1†	20	75	1.0	800m	8.0	200J	DO5Ø
70	BZY91C20	5	20	75	1.0	800m	7.5	175J	DO5Ø
71	Z6B20	5†	20	75	1.0	800m	8.0	200J	DO5Ø
72	C6C20Ø	10†	20	75	1.0	800m	8.0	200J	DO5
73	ZC720	5	20	100	1.0	.35		175A	S533
74	BZT03C20		20	600	25m	6.0			A333c
75	50KZ17		21	50	5.0m				DO5§
76	50KZ18A		21.1	50	5.0m				DO5§
77	10KZ24	10†	21.6	10	50m		.09		DO4§
78	CTZC22CØ	1	22	5.0	50m	3.5 †	8.0	175A	A1ey
79	TZC22C	1	22	5.0	50m	3.5 †	8.0	175A	A1ey
80	CTZC22EØ	3	22	5.0	50m	3.5 †	8.0	175A	A1ey
81	TZC22E	3	22	5.0	50m	3.5 †	8.0	175A	A1ey
82	1N4026B	5	22	5.0	55m	5.0	8.7	180A	S82
83	1N4966	5	22	5.0	50m	5.0		175A	A146m
84	1N5358B	5	22	5.0	50m	3.5		200A	A1ee
85	BZV40C22	5	22	5.0	50m	5.0			A1ee
86	BZV48C22	5	22	5.0	50m	3.5	8.0	175J	DO27
87	BZV58C22	5	22	5.0	50m	3.5	8.0	175J	A1ee
88	CTZC22,A,B,DØ	5†	22	5.0	50m	3.5 †	8.0	175A	A1ey
89	DSZ4722	5	22	5.0	50m	5.0		175	A60ae
90	DSZ5722	5	22	5.0	50m	5.0	8.5	175A	A60r
91	MZ5722	5	22	5.0	50m	5.0	8.0	175A	A60f
92	TZC22,A,B,D	5†	22	5.0	50m	3.5 †	8.0	175A	A1ey
93	UZ4722	5	22	5.0	50m	5.0		175A	A380a
94	UZ5722	5	22	5.0	50m	5.0	8.5	175A	A380a
95	ZC22	5†	22	5.0	50m	3.5		150A	A1ey
96	ZC22B	5	22	5.0	50m	3.5			A1ey
97	1N4026A	10	22	5.0	55m	5.0	8.7	180A	S82
98	1N5358A	10	22	5.0	50m	3.5		200A	A1ee
99	DSZ4822	10	22	5.0	50m	5.0		175	A60ae
100	DSZ5822	10	22	5.0	50m	5.0	8.5	175A	A60r
101	MZ5822	10	22	5.0	50m	5.0	8.0	175A	A60f
102	UZ4822	10	22	5.0	50m	5.0		175A	A380a
103	UZ5822	10	22	5.0	50m	5.0	8.5	175A	A380a
104	ZC22A	10	22	5.0	50m	3.5			A1ey
105	D816A	15	22	5.0	10m	240 †	15	100C	S494
106	1N4026	20	22	5.0	55m	5.0	8.7	180A	S82
107	1N5358	20	22	5.0	50m			200A	A1ee
108	MZ5922	20	22	5.0	50m	5.0	8.0	175A	A60f
109	UZ5922	20	22	5.0	50m	5.0	8.5	175A	A380a
110	UZ7722L	5	22	5.5	100m	4.5	8.0	175	A380c
111	UZ7822L	10	22	5.5	100m	4.5	8.0	175	A380a
112	UZ7922L	20	22	5.5	100m	4.5	8.0	175	A380c
113	6ALZ22A	5	22	6.0	50m			170J	A416
114	6ALZ22	10	22	6.0	50m			170J	A416
115	6ALZ22B	20	22	6.0	50m			170J	A416
116	Z3A22	1†	22	10	50m	1.8	9.0	200J	S457Ø
117	1N1359A	5	22	10	150m	3.0	8.0	155A	DO4Ø
118	1N1420	5	22	10	100m	5.0 †	8.0	175C	S154
119	1N1608A	5	22	10	90m	6.0	9.0	200S	DO4
120	1N1821A	5	22	10	250m	3.0	8.0	150A	S19a
121	1N1896A	5	22	10	8.0m	24	6.4	200A	S82
122	1N2985B	5	22	10	115m	5.0		175C	DO4Ø
123	1N4209B	5	22	10	115m	5.0		200S	DO10
124	1N4270B	5	22	10	115m	5.0	8.0	175C	S134
125	1S5022,A	5†	22	10	50m	5.0	8.0	150C	DO4
126	1S6022A	5	22	10	100m	5.0	6.0	150	DO4
127	MZT2985B	5.0	22	10	115m	5.0		150J	Y220AC
128▼	SZ16-22-5-1	5.0	22	10	1.0m			175J	u5d
129▼	SZ16-22-5-25	5.0	22	10	25m			175J	u5d
130	UZ7722	5	22	10	100m	4.5	8.0	175	S277
131	Z3B22	5†	22	10	50m	1.8	9.0	200J	S457Ø
132	1N1359	10	22	10	150m	3.0	8.0	155A	DO4Ø
133	1N1608	10	22	10	90m	6.0	9.0	200S	DO4
134	1N1821	10	22	10	250m	3.0	8.0	150A	S19a
135	1N1821CØ	10	22	10	250m	3.0	8.0	150A	S19a
136	1N1896	10	22	10	8.0m	24	6.4	200A	S82
137	1N2985A	10	22	10	115m	5.0		175C	DO4Ø
138	1N4209A	10	22	10	115m	5.0		200S	DO10
139	1N4270A	10	22	10	115m	5.0	8.0	175C	S134
140	1S278	10	22	10	120m	5.0	8.2	150J	S19g
141	1S5022CØ	10	22	10	50m	5.0	8.0	150C	DO4
142	1S6022	10	22	10	100m	5.0	6.0	150	DO4
143	C3C22Ø	10†	22	10	50m	1.8	9.0	200J	S457
144	MZT2985A	10	22	10	115m	5.0		150J	Y220AC
145▼	SZ16-22-10-1	10	22	10	1.0m			175J	u5d
146▼	SZ16-22-10-25	10	22	10	25m			175J	u5d
147	UZ7822	10	22	10	100m	4.5	8.0	175	S277
148	1N1359B	20	22	10	150m	3.0			S11e
149	1N2985	20	22	10	115m	5.0		175C	DO4Ø
150	1N4209	20	22	10	115m	5.0		200S	DO10
151	1N4270	20	22	10	115m	5.0	8.0	175C	S134
152	MZT2985	20	22	10	115m	5.0		150J	Y220AC
153▼	SZ16-22-20-1	20	22	10	1.0m			175J	u5d
154▼	SZ16-22-20-25	20	22	10	25m			175J	u5d
155	UZ7922	20	22	10	100m	4.5	8.0	175	S277
156	BZX98C22	5	22	12	25m	15	11	150J	S4af
157	BZY93C22	5	22	20	500m	1.8	16mV	175J	DO4Ø
158	Z7A22	1†	22	25	500m	1.8	9.0	200J	S457Ø
159▼	SZ40-22-5-25	5.0	22	25	25m			175J	u5e
160	Z7B22	5†	22	25	500m	1.8	9.0	200J	S457Ø
161	ZX22	5	22	25	25	15	7.0	150J	S441
162	C7C22Ø	10†	22	25	500m	1.8	9.0	200J	S457
163▼	SZ40-22-10-25	10	22	25	25m			175J	u5e
164▼	SZ40-22-20-25	20	22	25	25m			175J	u5e
165	1N2819B	5	22	50	570m	2.5	8.0	175S	C5a
166	1N3320B	5	22	50	570m	2.5		175J	S4w
167	50T22,A,B	5†	22	50	570m	2.5	8.0		S19e
168	50Z22,A,B	5†	22	50	570m	2.5	8.0	175	C5a
169	MZT3320B	5.0	22	50	570m	2.5		150J	Y220AC
170	1N2819A	10	22	50	570m	2.5	8.0	175S	C5a
171	1N3320A	10	22	50	570m	2.5		175J	S4w
172	MZT3320A	10	22	50	570m	2.5		150J	Y220AC
173	1N2819	20	22	50	570m	2.5	8.0	175S	C5a
174	1N3320	20	22	50	570m	2.5		175J	S4w
175	MZT3320	20	22	50	570m	2.5		150J	Y220AC
176	Z6A22	1†	22	75	1.0	800m	9.0	200J	DO5Ø
177	BZY91C22	5	22	75	1.0	800m	7.5	175J	DO5Ø
178	Z6B22	5†	22	75	1.0	800m	9.0	200J	DO5Ø
179	C6C22Ø	10†	22	75	1.0	800m	9.0	200J	DO5
180	80TF22,A	5†	22	80	450m	11m	1.0	125C	M117c
181	ZC722	5	22	100	1.0	.38		175A	S533
182	BZT03C22		22	600	25m	6.0			A333c
183	50KZ18		22.2	50	5.0m				DO5§
184	RD24DLM		22.4	10	200m	4.0		150J	S19s
185	6ALZ23A	5	23	6.0	50m			170J	A416
186	6ALZ23	10	23	6.0	50m			170J	A416
187	6ALZ23B	20	23	6.0	50m			170J	A416
188	50KZ20A		23.4	50	5.0m				DO5§
189	RD24DK		23.5	10	200m	4.0		150J	S19s
190	1N2049	10	23.5	10	150m	8.0		175A	DO4

$V_Z \geq 24$ V

LINE No.	4 TYPE NUMBER	3 TOL. ± (%)	1 NOM. REF. VOLT. (V)	2 PD @ 25°C MAX (W)	TEST CUR. Izt (A)	MAX. DYN. IMP. (Ω)	TEMP. COEFF Tc MAX	MAX. TEMP (°C)	DWG. NO.
194	CTZC24CØ	1	24	5.0	50m	3.5 †	8.0	175A	A1ey
195	TZC24C	1	24	5.0	50m	3.5 †	8.0	175A	A1ey
196	CTZC24EØ	3	24	5.0	50m	3.5 †	8.0	175A	A1ey
197	TZC24E	3	24	5.0	50m	3.5 †	8.0	175A	A1ey
198	1N4027B	5	24	5.0	50m	6.0	8.8	180A	S82
199	1N4967	5	24	5.0	50m	5.0		175A	A146m
200	1N5359B	5	24	5.0	50m	3.5		200A	A1ee

SYMBOLS AND CODES EXPLAINED IN INTERPRETER

10. VOLTAGE REGULATOR DIODES, POWER - $V_Z \geq 24$ V (Cont'd)

IN ORDER OF: (1) REF. VOLTAGE (2) MAX PD MAX (3) TOLERANCE & (4) TYPE NUMBER

LINE No.	4 TYPE NUMBER	3 TOL. ± (%)	1 NOM. REF. VOLT. (V)	2 PD @ 25°C MAX (W)	TEST CUR. Izt (A)	MAX. DYN. IMP. (Ω)	TEMP. COEFF Tc MAX	MAX. TEMP (°C)	DWG. NO.
1	BZV40C24	5	24	5.0	50m	5.0			A1ee
2	BZV48C24	5	24	5.0	50m	3.5	8.0	175J	DO27
3	BZV58C24	5	24	5.0	50m	3.5	8.0	175J	A1ee
4	CTZC24,A,B,DØ	5†	24	5.0	50m	3.5 †	8.0	175A	A1ey
5	DSZ4724	5	24	5.0	50m	5.0		175	A60ae
6	DSZ5724	5	24	5.0	50m	5.0	9.0	175A	A60r
7	MZ5724	5	24	5.0	50m	5.0	8.0	175A	A60f
8	TZC24,A,B,D	5†	24	5.0	50m	3.5 †	8.0	175A	A1ey
9	UDZ5724Ø	5	24	5.0	50m	5.0		175A	A356b
10	UZ4724	5	24	5.0	50m	5.0		175A	A380a
11	UZ5724	5	24	5.0	50m	5.0	9.0	175A	A380a
12	ZC24	5†	24	5.0	50m	3.5		150A	A1ey
13	ZC24B	5	24	5.0	50m	3.5			A1ey
14	1N4027A	10	24	5.0	50m	6.0	8.8	180A	S82
15	1N5359A	10	24	5.0	50m	3.5		200A	A1ee
16	DSZ4824	10	24	5.0	50m	5.0		175	A60ae
17	DSZ5824	10	24	5.0	50m	5.0	9.0	175A	A60r
18	MZ5824	10	24	5.0	50m	5.0	8.0	175A	A60f
19	UDZ5824Ø	10	24	5.0	50m	5.0		175A	A356b
20	UZ4824	10	24	5.0	50m	5.0		175A	A380a
21	UZ5824	10	24	5.0	50m	5.0	9.0	175A	A380a
22	ZC24A	10	24	5.0	50m	3.5			A1ey
23	1N4027	20	24	5.0	50m	6.0	8.8	180A	S82
24	1N5359	20	24	5.0	50m			200A	A1ee
25	MZ5924	20	24	5.0	50m	5.0	8.0	175A	A60f
26	UZ5924	20	24	5.0	50m	5.0	9.0	175A	A380a
27	UZ7724L	5	24	5.5	100m	5.0	8.0	175	A380c
28	UZ7824L	10	24	5.5	100m	5.0	8.0	175	A380a
29	UZ7924L	20	24	5.5	100m	5.0	8.0	175	A380c
30	6ALZ24A	5	24	6.0	50m			170J	A416
31	UDZ7724Ø	5	24	6.0	100m	5.0		175A	A356c
32	6ALZ24	10	24	6.0	50m			170J	A416
33	UDZ7824Ø	10	24	6.0	100m	5.0		175A	A356c
34	6ALZ24B	20	24	6.0	50m			170J	A416
35	Z3A24	1†	24	10	50m	2.0	9.0	200J	S457Ø
36	1N1360A	5	24	10	150m	3.0	8.0	155A	DO4Ø
37	1N1822A	5	24	10	250m	3.0	8.0	150A	S19a
38	1N2986B	5	24	10	105m	5.0		175C	DO4Ø
39	1N4210B	5	24	10	105m	5.0		200S	DO10
40	1N4271B	5	24	10	105m	5.0	8.0	175C	S134
41	1S5024,A	5†	24	10	50m	5.0	8.0	150C	DO4
42	1S6024A	5	24	10	100m	5.0	6.0	150	DO4
43	MZT2986B	5.0	24	10	105m	5.0		150J	Y220AC
44	PSZ24	5†	24	10	100m	4.0 †			S513
45▼	SZ16-24-5-1	5.0	24	10	1.0m			175J	u5d
46▼	SZ16-24-5-25	5.0	24	10	25m			175J	u5d
47	UZ7724	5	24	10	100m	5.0	8.0	175	S277
48	Z3B24	5†	24	10	50m	2.0	9.0	200J	S457Ø
49	1N1360	10	24	10	150m	3.0	8.0	155A	DO4Ø
50	1N1822	10	24	10	250m	3.0	8.0	150A	S19a
51	1N1822CØ	10	24	10	250m	3.0	8.0	150A	S19a
52	1N2986A	10	24	10	105m	5.0		175C	DO4Ø
53	1N4210A	10	24	10	105m	5.0		200S	DO10
54	1N4271A	10	24	10	105m	5.0	8.0	175C	S134
55	1S279	10	24	10	120m	5.0	8.3	150J	S19g
56	1S5024CØ	10	24	10	50m	5.0	8.0	150C	DO4
57	1S6024	10	24	10	100m	5.0	6.0	150	DO4
58	C3C24Ø	10†	24	10	50m	2.0	9.0	200J	S457
59	MZT2986A	10	24	10	105m	5.0		150J	Y220AC
60▼	SZ16-24-10-1	10	24	10	1.0m			175J	u5d
61▼	SZ16-24-10-25	10	24	10	25m			175J	u5d
62	UZ7824	10	24	10	100m	5.0	8.0	175	S277
63	1N1360B	20	24	10	150m	3.0			S11e
64	1N2986	20	24	10	105m	5.0		175C	DO4Ø
65	1N4210	20	24	10	105m	5.0		200S	DO10
66	1N4271	20	24	10	105m	5.0	8.0	175C	S134
67	MZT2986	20	24	10	105m	5.0		150J	Y220AC
68▼	SZ16-24-20-1	20	24	10	1.0m			175J	u5d
69▼	SZ16-24-20-25	20	24	10	25m			175J	u5d
70	UZ7924	20	24	10	100m	5.0	8.0	175	S277
71	BZX98C24	5	24	12	25m	15	11	150J	S4af
72	BZY93C24	5	24	20	500m	2.0	18mV	175J	DO4Ø
73▼	SZ40-24-5-25	5.0	24	25	25m			175J	u5e
74	Z7B24	5†	24	25	500m	2.0	9.0	200J	S457Ø
75	ZX24	5	24	25	25	15	7.0	150J	S441
76▼	SZ40-24-10-25	10	24	25	25m			175J	u5e
77▼	SZ40-24-20-25	20	24	25	25m			175J	u5e
78	1N2820B	5	24	50	520m	2.6	8.0	175S	C5a
79	1N3321B	5	24	50	520m	2.6		175J	S4w
80	50T24,A,B	5†	24	50	520m	2.6	8.0		S19e
81	50Z24,A,B	5†	24	50	520m	2.6	8.0	175	C5a
82	MZT3321B	5.0	24	50	520m	2.6		150J	Y220AC
83	1N2820A	10	24	50	520m	2.6	8.0	175S	C5a
84	1N3321A	10	24	50	520m	2.6		175J	S4w
85	MZT3321A	10	24	50	520m	2.6		150J	Y220AC
86	1N2820	20	24	50	520m	2.6	8.0	175S	C5a
87	1N3321	20	24	50	520m	2.6		175J	S4w
88	MZT3321	20	24	50	520m	2.6		150J	Y220AC
89	Z6A24	1†	24	75	1.0	900m	9.0	200J	DO5Ø
90	BZY91C24	5	24	75	1.0	900m	8.0	175J	DO5Ø
91	Z6B24	5†	24	75	1.0	900m	9.0	200J	DO5Ø
92	C6C24Ø	10†	24	75	1.0	900m	9.0	200J	DO5
93	ZC724	5	24	100	1.0	.40		175A	S533
94	BZT03C24		24	600	25m	7.0			A333c
95	10KZ27	10†	24.3	10	50m		.09		DO4Ø
96	RD24DMN		24.4	10	200m	4.0		150J	S19s
97	50KZ20		24.7	50	5.0m				DO5§
98	CTZC25CØ	1	25	5.0	50m	4.0 †	8.0	175A	A1ey
99	TZC25C	1	25	5.0	50m	4.0 †	8.0	175A	A1ey
100	CTZC25EØ	3	25	5.0	50m	4.0 †	8.0	175A	A1ey
101	TZC25E	3	25	5.0	50m	4.0 †	8.0	175A	A1ey
102	1N5360B	5	25	5.0	50m	4.0		200A	A1ee
103	BZV40C25	5	25	5.0	50m	5.5			A1ee
104	CTZC25,A,B,DØ	5†	25	5.0	50m	4.0 †	8.0	175A	A1ey
105	TZC25,A,B,D	5†	25	5.0	50m	4.0 †	8.0	175A	A1ey
106	ZC25	5†	25	5.0	50m	4.0		150A	A1ey
107	ZC25B	5	25	5.0	50m	4.0			A1ey
108	1N5360A	10	25	5.0	50m	4.0		200A	A1ee
109	ZC25A	10	25	5.0	50m	4.0			A1ey
110	1N5360	20	25	5.0	50m			200A	A1ee
111	6ALZ25A	5	25	6.0	50m			170J	A416
112	6ALZ25	10	25	6.0	50m			170J	A416
113	6ALZ25B	20	25	6.0	50m			170J	A416
114	1N2987B	5	25	10	100m	6.0	8.0	175S	DO4
115	1N4211B	5	25	10	100m	6.0		200S	DO10
116	1N2987A	10	25	10	100m	6.0	8.0	175S	DO4
117	1N4211A	10	25	10	100m	6.0		200S	DO10
118	1S280	10	25	10	120m	5.0	8.1	150J	S19g
119	1N2987	20	25	10	100m	6.0	8.0	175S	DO4
120	1N4211	20	25	10	100m	6.0		200S	DO10
121	1N2821B	5	25	50	500m	2.7	8.0	175S	C5a
122	1N3322B	5	25	50	500m	2.7		175J	S4w
123	50Z25,A,B	5†	25	50	500m	2.7	8.0	175	C5a
124	MZT3322B	5.0	25	50	500m	2.7		150J	Y220AC
125	1N2821A	10	25	50	500m	2.7	8.0	175S	C5a
126	1N3322A	10	25	50	500m	2.7		175J	S4w
127	MZT3322A	10	25	50	500m	2.7		150J	Y220AC
128	1N2821	20	25	50	500m	2.7	8.0	175S	C5a
129	1N3322	20	25	50	500m	2.7		175J	S4w
130	MZT3322	20	25	50	500m	2.7		150J	Y220AC
131	50KZ22A		25.7	50	5.0m				DO5§
132	CTZC27CØ	1	27	5.0	50m	5.0 †	8.5	175A	A1ey
133	TZC27C	1	27	5.0	50m	5.0 †	8.5	175A	A1ey
134	CTZC27EØ	3	27	5.0	50m	5.0 †	8.5	175A	A1ey
135	TZC27E	3	27	5.0	50m	5.0 †	8.5	175A	A1ey
136	1N4028B	5	27	5.0	45m	6.0	9.0	180A	S82
137	1N4968	5	27	5.0	50m	6.0		175A	A146m
138	1N5361B	5	27	5.0	50m	5.0		200A	A1ee
139	BZV40C27	5	27	5.0	50m	6.0			A1ee
140	BZV48C27	5	27	5.0	50m	5.0	8.5	175J	DO27
141	BZV58C27	5	27	5.0	50m	5	8.5	175J	A1ee
142	CTZC27,A,B,DØ	5†	27	5.0	50m	5.0 †	8.5	175A	A1ey
143	DSZ4727	5	27	5.0	50m	6.0		175	A60ae
144	DSZ5727	5	27	5.0	50m	6.0	9.0	175A	A60r
145	MZ5727	5	27	5.0	50m	6.0	9.0	175A	A60f
146	TZC27,A,B,D	5†	27	5.0	50m	5.0 †	8.5	175A	A1ey
147	UDZ5727Ø	5	27	5.0	50m	6.0		175A	A356b
148	UZ4727	5	27	5.0	50m	6.0		175A	A380a
149	UZ5727	5	27	5.0	50m	6.0	9.0	175A	A380a
150	ZC27	5†	27	5.0	50m	5.0		150A	A1ey
151	ZC27B	5	27	5.0	50m	5.0			A1ey
152	1N4028A	10	27	5.0	45m	6.0	9.0	180A	S82
153	1N5361A	10	27	5.0	50m	5.0		200A	A1ee
154	DSZ4827	10	27	5.0	50m	6.0		175	A60ae
155	DSZ5827	10	27	5.0	50m	6.0	9.0	175A	A60r
156	MZ5827	10	27	5.0	50m	6.0	9.0	175A	A60f
157	UDZ5827Ø	10	27	5.0	50m	6.0		175A	A356b
158	UZ4827	10	27	5.0	50m	6.0		175A	A380a
159	UZ5827	10	27	5.0	50m	6.0	9.0	175A	A380a
160	ZC27A	10	27	5.0	50m	5.0			A1ey
161	D816B	15	27	5.0	10m	300 †	15	100C	S494
162	1N4028	20	27	5.0	45m	6.0	9.0	180A	S82
163	1N5361	20	27	5.0	50m			200A	A1ee
164	MZ5927	20	27	5.0	50m	6.0	9.0	175A	A60f
165	UZ5927	20	27	5.0	50m	6.0	9.0	175A	A380a
166	UZ7727L	5	27	5.5	90m	6.0	9.0	175	A380c
167	UZ7827L	10	27	5.5	90m	6.0	9.0	175	A380a
168	UZ7927L	20	27	5.5	90m	6.0	9.0	175	A380c
169	6ALZ27A	5	27	6.0	50m			170J	A416
170	UDZ7727Ø	5	27	6.0	90m	6.0		175A	A356c
171	6ALZ27	10	27	6.0	50m			170J	A416
172	UDZ7827Ø	10	27	6.0	90m	6.0		175A	A356c
173	6ALZ27B	20	27	6.0	50m			170J	A416
174	Z3A27	1†	27	10	50m	2.0	9.5	200J	S457Ø
175	1N1361A	5	27	10	150m	3.0	8.0	155A	DO4Ø
176	1N1421	5	27	10	50m	8.0 †	8.5	175C	S154
177	1N1609A	5	27	10	70m	10	9.5	200S	DO4
178	1N1823A	5	27	10	250m	3.0	8.0	150A	S19a
179	1N1897A	5	27	10	8.0m	27	6.6	200A	S82
180	1N2988B	5	27	10	95m	7.0		175C	DO4Ø
181	1N4212B	5	27	10	95m	7.0		200S	DO10
182	1N4272B	5	27	10	95m	7.0	8.5	175C	S134
183	1S5027,A	5†	27	10	50m	5.0	8.0	150C	DO4
184	1S6027A	5	27	10	100m	5.0	6.0	150	DO4
185	MZT2988B	5.0	27	10	9.5m	7.0		150J	Y220AC
186	PSZ27	5†	27	10	100m	4.0 †			S513
187▼	SZ16-27-5-1	5.0	27	10	1.0m			175J	u5d
188▼	SZ16-27-5-25	5.0	27	10	25m			175J	u5d
189	UZ7727	5	27	10	90m	6.0	9.0	175	S277
190	Z3B27	5†	27	10	50m	2.0	9.5	200J	S457Ø
191	1N1361	10	27	10	150m	3.0	8.0	155A	DO4Ø
192	1N1609	10	27	10	70m	10	9.5	200S	DO4
193	1N1823	10	27	10	250m	3.0	8.0	150A	S19a
194	1N1823CØ	10	27	10	250m	3.0	8.0	150A	S19a
195	1N1897	10	27	10	8.0m	27	6.6	200A	S82
196	1N2988A	10	27	10	95m	7.0		175C	DO4Ø
197	1N4212A	10	27	10	95m	7.0		200S	DO10
198	1N4272A	10	27	10	95m	7.0	8.5	175C	S134
199	1S281	10	27	10	120m	5.0	8.5	150J	S19g
200	1S5027CØ	10	27	10	50m	5.0	8.0	150C	DO4
201	1S6027	10	27	10	100m	8.0	6.0	150	DO4
202	10KZ30	10†	27	10	40m		.09		DO4§
203	C3C27Ø	10†	27	10	50m	2.0	9.5	200J	S457

SYMBOLS AND CODES EXPLAINED IN INTERPRETER

10. VOLTAGE REGULATOR DIODES, POWER - $V_Z \geq 24$ V (Cont'd)

IN ORDER OF: (1) REF. VOLTAGE (2) MAX PD MAX (3) TOLERANCE & (4) TYPE NUMBER

LINE No.	4 TYPE NUMBER	3 TOL. ± (%)	1 NOM. REF. VOLT. (V)	2 PD @ 25°C MAX (W)	TEST CUR. Izt (A)	MAX. DYN. IMP. (Ω)	TEMP. COEFF Tc MAX	MAX. TEMP (°C)	DWG. NO.
1	MZT2988A	10	27	10	9.5m	7.0		150J	Y220AC
2▼	SZ16-27-10-1	10	27	10	1.0m			175J	u5d
3▼	SZ16-27-10-25	10	27	10	25m			175J	u5d
4	UZ7827	10	27	10	90m	6.0	9.0	175	S277
5	1N1361B	20	27	10	150m	3.0			S11e
6	1N2988	20	27	10	95m	7.0		175C	DO4Ø
7	1N4212	20	27	10	95m	7.0		200S	DO10
8	1N4272	20	27	10	95m	7.0	8.5	175C	S134
9	MZT2988	20	27	10	9.5m	7.0		150J	Y220AC
10▼	SZ16-27-20-1	20	27	10	1.0m			175J	u5d
11▼	SZ16-27-20-25	20	27	10	25m			175J	u5d
12	UZ7927	20	27	10	90m	6.0	9.0	175	S277
13	BZX98C27	5	27	12	25m	15	11	150J	S4af
14	BZY93C27	5	27	20	500m	2.0	21mV	175J	DO4Ø
15▼	SZ40-27-5-25	5.0	27	25	25m			175J	u5e
16	Z7B27	5†	27	25	500m	2.0	9.5	200J	S457Ø
17	ZX27	5	27	25	25	15	7.0	150J	S441
18▼	SZ40-27-10-25	10	27	25	25m			175J	u5e
19▼	SZ40-27-20-25	20	27	25	25m			175J	u5e
20	1N2822B	5	27	50	460m	2.8	8.5	175S	C5a
21	1N3323B	5	27	50	460m	2.8		175J	S4w
22	50T27,A,B	5†	27	50	460m	2.8	8.5	150C	C5a
23	50Z27,A,B	5†	27	50	460m	2.8	8.5	175	C5a
24	MZT3323B	5.0	27	50	460m	2.8		150J	Y220AC
25	1N2822A	10	27	50	460m	2.8	8.5	175S	C5a
26	1N3323A	10	27	50	460m	2.8		175J	S4w
27	MZT3323A	10	27	50	460m	2.8		150J	Y220AC
28	1N2822	20	27	50	460m	2.8	8.5	175S	C5a
29	1N3323	20	27	50	460m	2.8		175J	S4w
30	MZT3323	20	27	50	460m	2.8		150J	Y220AC
31	Z6A27	1†	27	75	1.0	1.0	9.0	200J	DO5Ø
32	BZY91C27	5	27	75	1.0	1.0	8.2	175J	DO5Ø
33	Z6B27	5†	27	75	1.0	1.0	9.0	200J	DO5Ø
34	C6C27Ø	10†	27	75	1.0	1.0	9.0	200J	DO5
35	80TF27,A	5†	27	80	370m	13m	1.0	125C	M117c
36	ZC727	5	27	100	1.0	.45		175A	S533
37	BZT03C27		27	600	25m	7.0			A333c
38	50KZ22		27.1	50	5.0m				DO5§
39	RD29DLM		27.5	10	100m	5.0		150J	S19s
40	1N5362B	5	28	5.0	50m	6.0		200A	A1ee
41	BZV40C28	5	28	5.0	50m	7.0			A1ee
42	1N5362A	10	28	5.0	50m	6.0		200A	A1ee
43	1N5362	20	28	5.0	50m			200A	A1ee
44	6ALZ28A	5	28	6.0	50m			170J	A416
45	6ALZ28	10	28	6.0	50m			170J	A416
46	6ALZ28B	20	28	6.0	50m			170J	A416
47	50KZ24A		28.1	50	5.0m				DO5§
48	RD29DK		28.5	10	100m	5.0		150J	S19s
49	RD29DMN		29.2	10	100m	5.0		150J	S19s
50	10KZ33	10†	29.7	10	40m		.09		DO4§
51	50KZ24		29.7	50	5.0m				DO5§
52	CTZC30CØ	1	30	5.0	40m	8.0 †	8.5	175A	A1ey
53	TZC30C	1	30	5.0	40m	8.0 †	8.5	175A	A1ey
54	CTZC30EØ	3	30	5.0	40m	8.0 †	8.5	175A	A1ey
55	TZC30E	3	30	5.0	40m	8.0 †	8.5	175A	A1ey
56	1N4029B	5	30	5.0	42m	8.0	9.1	180A	S82
57	1N4969	5	30	5.0	40m	8.0		175A	A146m
58	1N5363B	5	30	5.0	40m	8.0		200A	A1ee
59	BZV40C30	5	30	5.0	40m	8.0			A1ee
60	BZV48C30	5	30	5.0	40m	8.0	8.5	175J	DO27
61	BZV58C30	5	30	5.0	40m	8	8.5	175J	A1ee
62	CTZC30,A,B,DØ	5†	30	5.0	40m	8.0 †	8.5	175A	A1ey
63	DSZ4730	5	30	5.0	40m	8.0		175	A60ae
64	DSZ5730	5	30	5.0	40m	8.0	9.0	175A	A60r
65	MZ5730	5	30	5.0	40m	8.0	9.0	175A	A60f
66	TZC30,A,B,D	5†	30	5.0	40m	8.0 †	8.5	175A	A1ey
67	UDZ5730Ø	5	30	5.0	40m	8.0		175A	A356b
68	UZ4730	5	30	5.0	40m	8.0		175A	A380a
69	UZ5730	5	30	5.0	40m	8.0	9.0	175A	A380a
70	ZC30#B	5†	30	5.0	40m	8.0		150A	A1ey
71	ZC30B	5	30	5.0	40m	8.0			A1ey
72	1N4029A	10	30	5.0	42m	8.0	9.1	180A	S82
73	1N5363A	10	30	5.0	40m	8.0		200A	A1ee
74	DSZ4830	10	30	5.0	40m	8.0		175	A60ae
75	DSZ5830	10	30	5.0	40m	8.0	9.0	175A	A60r
76	MZ5830	10	30	5.0	40m	8.0	9.0	175A	A60f
77	UDZ5830Ø	10	30	5.0	40m	8.0		175A	A356b
78	UZ4830	10	30	5.0	40m	8.0		175A	A380a
79	UZ5830	10	30	5.0	40m	8.0	9.0	175A	A380a
80	ZC30A	10	30	5.0	40m	8.0			A1ey
81	1N4029	20	30	5.0	42m	8.0	9.1	180A	S82
82	1N5363	20	30	5.0	40m			200A	A1ee
83	MZ5930	20	30	5.0	40m	8.0	9.0	175A	A60f
84	UZ5930	20	30	5.0	40m	8.0	9.0	175A	A380a
85	UZ7730L	5	30	5.5	80m	8.0	9.0	175	A380c
86	UZ7830L	10	30	5.5	80m	8.0	9.0	175	A380a
87	UZ7930L	20	30	5.5	80m	8.0	9.0	175	A380c
88	6ALZ30A	5	30	6.0	40m			170J	A416
89	UDZ7730Ø	5	30	6.0	80m	8.0m		175A	A356c
90	6ALZ30	10	30	6.0	40m			170J	A416
91	UDZ7830Ø	10	30	6.0	80m	8.0		175A	A356c
92	6ALZ30B	20	30	6.0	40m			170J	A416
93	Z3A30	1†	30	10	50m	2.5	9.5	200J	S457Ø
94	1N1362A	5	30	10	150m	4.0	8.0	155A	DO4Ø
95	1N1824A	5	30	10	250m	4.0	8.0	150A	S19a
96	1N1824C,CAØ	5†	30	10	250m	4.0	8.0	150A	S19a
97	1N1824CAØ	5	30	10	250m	4.0	8.0	150A	S19a
98	1N2989B	5	30	10	85m	8.0		175C	DO4Ø
99	1N4213B	5	30	10	85m	8.0		200S	DO10
100	1N4273B	5	30	10	85m	8.0	8.5	175C	S134
101	1S5030,A	5†	30	10	50m	5.0	8.0	150C	DO4
102	1S6030A	5	30	10	100m	8.0	6.0	150	DO4
103	MZT2989B	5.0	30	10	85m	8.0		150J	Y220AC
104▼	SZ16-30-5-1	5.0	30	10	1.0m			175J	u5d
105▼	SZ16-30-5-25	5.0	30	10	25m			175J	u5d
106	UZ7730	5	30	10	80m	8.0	9.0	175	S277
107	Z3B30	5†	30	10	50m	2.5	9.5	200J	S457Ø
108	1N1362	10	30	10	150m	4.0	8.0	155A	DO4Ø
109	1N1824	10	30	10	250m	4.0	8.0	150A	S19a
110	1N2989A	10	30	10	85m	8.0		175C	DO4Ø
111	1N4213A	10	30	10	85m	8.0		200S	DO10
112	1N4273A	10	30	10	85m	8.0	8.5	175C	S134
113	1S282	10	30	10	120m	6.0	8.3	150J	S19g
114	1S5030CØ	10	30	10	50m	5.0	8.0	150C	DO4
115	1S6030	10	30	10	100m	8.0	6.0	150	DO4
116	C3C30Ø	10†	30	10	50m	2.5	9.5	200J	S457
117	MZT2989A	10	30	10	85m	8.0		150J	Y220AC
118▼	SZ16-30-10-1	10	30	10	1.0m			175J	u5d
119▼	SZ16-30-10-25	10	30	10	25m			175J	u5d
120	UZ7830	10	30	10	80m	8.0	9.0	175	S277
121	1N1362B	20	30	10	150m	4.0			S11e
122	1N2989	20	30	10	85m	8.0		175C	DO4Ø
123	1N4213	20	30	10	85m	8.0		200S	DO10
124	1N4273	20	30	10	85m	8.0	8.5	175C	S134
125	MZT2989	20	30	10	85m	8.0		150J	Y220AC
126▼	SZ16-30-20-1	20	30	10	1.0m			175J	u5d
127▼	SZ16-30-20-25	20	30	10	25m			175J	u5d
128	UZ7930	20	30	10	80m	8.0	9.0	175	S277
129	BZX98C30	5	30	12	25m	15	11	150J	S4af
130	BZY93C30	5	30	20	500m	2.5	25mV	175J	DO4Ø
131▼	SZ40-30-5-25	5.0	30	25	25m			175J	u5e
132	Z7B30	5†	30	25	500m	2.5	9.5	200J	S457Ø
133	ZX30	5	30	25	25	15	7.0	150J	S441
134▼	SZ40-30-10-25	10	30	25	25m			175J	u5e
135▼	SZ40-30-20-25	20	30	25	25m			175J	u5e
136	1N2823B	5	30	50	420m	3.0	8.5	175S	C5a
137	1N3324B	5	30	50	420m	3.0		175J	S4w
138	50T30,A,B	5†	30	50	420m	3.0	8.5		S19e
139	50Z30,A,B	5†	30	50	420m	3.0	8.5	175	C5a
140	MZT3324B	5.0	30	50	420m	3.0		150J	Y220AC
141	1N2823A	10	30	50	420m	3.0	8.5	175S	C5a
142	1N3324A	10	30	50	420m	3.0		175J	S4w
143	MZT3324A	10	30	50	420m	3.0		150J	Y220AC
144	1N2823	20	30	50	420m	3.0	8.5	175S	C5a
145	1N3324	20	30	50	420m	3.0		175J	S4w
146	MZT3324	20	30	50	420m	3.0		150J	Y220AC
147	Z6A30	1†	30	75	1.0	1.1	9.0	200J	DO5Ø
148	BZY91C30	5	30	75	1.0	1.1	8.5	175J	DO5Ø
149	Z6B30	5†	30	75	1.0	1.1	9.0	200J	DO5Ø
150	C6C30Ø	10†	30	75	1.0	1.1	9.0	200J	DO5
151	ZC730	5	30	100	1.0	.50		175A	S533
152	BZT03C30		30	600	25m	8.0			A333c
153	50KZ26A		30.4	50	5.0m				DO5§
154	50KZ26		32.1	50	5.0m				DO5§
155	10KZ36	10†	32.4	10	30m		.09		DO4§
156	50KZ28A		32.8	50	5.0m				DO5§
157	CTZC33CØ	1	33	5.0	40m	10 †	8.5	175A	A1ey
158	TZC33C	1	33	5.0	40m	10 †	8.5	175A	A1ey
159	CTZC33EØ	3	33	5.0	40m	10 †	8.5	175A	A1ey
160	TZC33E	3	33	5.0	40m	10 †	8.5	175A	A1ey
161	1N4030B	5	33	5.0	38m	10	9.2	180A	S82
162	1N4970	5	33	5.0	40m	10		175A	A146m
163	1N5364B	5	33	5.0	40m	10		200A	A1ee
164	BZV40C33	5	33	5.0	40m	10			A1ee
165	BZV48C33	5	33	5.0	40m	10	8.5	175J	DO27
166	BZV58C33	5	33	5.0	40m	10	8.5	175J	A1ee
167	CTZC33,A,B,DØ	5†	33	5.0	40m	10 †	8.5	175A	A1ey
168	DSZ4733	5	33	5.0	40m	10		175	A60ae
169	DSZ5733	5	33	5.0	40m	10	9.0	175A	A60r
170	MZ5733	5	33	5.0	40m	10	9.0	175A	A60f
171	TZC33,A,B,D	5†	33	5.0	40m	10 †	8.5	175A	A1ey
172	UDZ5733Ø	5	33	5.0	40m	10		175A	A356b
173	UZ4733	5	33	5.0	40m	10		175A	A380a
174	UZ5733	5	33	5.0	40m	10	9.0	175A	A380a
175	ZC33	5†	33	5.0	40m	10		150A	A1ey
176	ZC33B	5	33	5.0	40m	10			A1ey
177	1N4030A	10	33	5.0	38m	10	9.2	180A	S82
178	1N5364A	10	33	5.0	40m	10		200A	A1ee
179	DSZ4833	10	33	5.0	40m	10		175	A60ae
180	DSZ5833	10	33	5.0	40m	10	9.0	175A	A60r
181	MZ5833	10	33	5.0	40m	10	9.0	175A	A60f
182	UDZ5833Ø	10	33	5.0	40m	10		175A	A356b
183	UZ4833	10	33	5.0	40m	10		175A	A380a
184	UZ5833	10	33	5.0	40m	10	9.0	175A	A380a
185	ZC33A	10	33	5.0	40m	10			A1ey
186	D816V	15	33	5.0	10m	300 †	15	100C	S494
187	1N4030	20	33	5.0	38m	10	9.2	180A	S82
188	1N5364	20	33	5.0	40m			200A	A1ee
189	MZ5933	20	33	5.0	40m	10	9.0	175A	A60f
190	UZ5933	20	33	5.0	40m	10	9.0	175A	A380a
191	UZ7733L	5	33	5.5	70m	10	9.0	175	A380c
192	UZ7833L	10	33	5.5	70m	10	9.0	175	A380a
193	UZ7933L	20	33	5.5	70m	10	9.0	175	A380c
194	6ALZ33A	5	33	6.0	40m			170J	A416
195	UDZ7733Ø	5	33	6.0	70m	10		175A	A356c
196	6ALZ33	10	33	6.0	40m			170J	A416
197	UDZ7833Ø	10	33	6.0	70m	10		175A	A356c
198	6ALZ33B	20	33	6.0	40m			170	A416
199	Z3A33	1†	33	10	50m	3.0	10	200J	S457Ø

SYMBOLS AND CODES EXPLAINED IN INTERPRETER

IN ORDER OF: (1) REF. VOLTAGE (2) MAX PD MAX (3) TOLERANCE & (4) TYPE NUMBER

LINE No.	4 TYPE NUMBER	3 TOL. ± (%)	1 NOM. REF. VOLT. (V)	2 PD @ 25°C MAX (W)	TEST CUR. Izt (A)	MAX. DYN. IMP. (Ω)	TEMP. COEFF Tc MAX	MAX. TEMP (°C)	DWG. NO.
1	1N1363A	5	33	10	150m	4.0	8.0	155A	DO4Ø
2	1N1825A	5	33	10	150m	4.0	8.0	150A	S19a
3	1N1898A	5	33	10	8.0m	30	6.8	200A	S82
4	1N2990B	5	33	10	75m	9.0		175C	DO4Ø
5	1N4214B	5	33	10	75m	9.0		200S	DO10
6	1N4274B	5	33	10	75m	9.0	8.5	175C	S134
7	1S5033,A	5†	33	10	50m	8.0	8.0	150C	DO4
8	1S6033A	5	33	10	50m	8.0	6.0	150	DO4
9	MZT2990B	5.0	33	10	75m	9.0		150J	Y220AC
10	PSZ33	5†	33	10	100m	4.0 †			S513
11▼	SZ16-33-5-1	5.0	33	10	1.0m			175J	u5d
12▼	SZ16-33-5-25	5.0	33	10	25m			175J	u5d
13	UZ7733	5	33	10	70m	10	9.0	175	S277
14	Z3B33	5†	33	10	50m	3.0	10	200J	S457Ø
15	1N1363	10	33	10	150m	4.0	8.0	155A	DO4Ø
16	1N1825	10	33	10	150m	4.0	8.0	150A	S19a
17	1N1825CØ	10	33	10	150m	4.0	8.0	150A	S19a
18	1N1898	10	33	10	8.0m	30	6.8	200A	S82
19	1N2990A	10	33	10	75m	9.0		175C	DO4Ø
20	1N4214A	10	33	10	75m	9.0		200S	DO10
21	1N4274A	10	33	10	75m	9.0	8.5	175C	S134
22	1S283	10	33	10	100m	7.0	8.8	150J	S19g
23	1S5033CØ	10	33	10	50m	8.0	8.0	150C	DO4
24	1S6033	10	33	10	50m	8.0	6.0	150	DO4
25	C3C33Ø	10†	33	10	50m	3.0	10	200J	S457
26	MZT2990A	10	33	10	75m	9.0		150J	Y220AC
27▼	SZ16-33-10-1	10	33	10	1.0m			175J	u5d
28▼	SZ16-33-10-25	10	33	10	25m			175J	u5d
29	UZ7833	10	33	10	70m	10	9.0	175	S277
30	1N1363B	20	33	10	150m	4.0			S11e
31	1N2990	20	33	10	75m	9.0		175C	DO4Ø
32	1N4214	20	33	10	75m	9.0		200S	DO10
33	1N4274	20	33	10	75m	9.0	8.5	175C	S134
34	MZT2990	20	33	10	75m	9.0		150J	Y220AC
35▼	SZ16-33-20-1	20	33	10	1.0m			175J	u5d
36▼	SZ16-33-20-25	20	33	10	25m			175J	u5d
37	UZ7933	20	33	10	70m	10	9.0	175	S277
38	BZX98C33	5	33	12	25m	15	11	150J	S4af
39	BZY93C33	5	33	20	500m	3.0	30mV	175J	DO4Ø
40▼	SZ40-33-5-25	5.0	33	25	25m			175J	u5e
41	Z7B33	5†	33	25	500m	3.0	10	200J	S457Ø
42	ZX33	5	33	25	25	15	7.0	150J	S441
43▼	SZ40-33-10-25	10	33	25	25m			175J	u5e
44▼	SZ40-33-20-25	20	33	25	25m			175J	u5e
45	1N2824B	5	33	50	380m	3.2	8.5	175S	C5a
46	1N3325B	5	33	50	380m	3.2		175J	S4w
47	50T33,A,B	5†	33	50	380m	3.2	8.5		S19e
48	50Z33,A,B	5†	33	50	380m	3.2	8.5	175	C5a
49	MZT3325B	5.0	33	50	380m	3.2		150J	Y220AC
50	1N2824A	10	33	50	380m	3.2	8.5	175S	C5a
51	1N3325A	10	33	50	380m	3.2		175J	S4w
52	MZT3325A	10	33	50	380m	3.2		150J	Y220AC
53	1N2824	20	33	50	380m	3.2	8.5	175S	C5a
54	1N3325	20	33	50	380m	3.2		175J	S4w
55	MZT3325	20	33	50	380m	3.2		150J	Y220AC
56	Z6A33	1†	33	75	1.0	1.2	10	200J	DO5Ø
57	BZY91C33	5	33	75	1.0	1.2	8.8	175J	DO5Ø
58	Z6B33	5†	33	75	1.0	1.2	10	200J	DO5Ø
59	C6C33Ø	10†	33	75	1.0	1.2	10	200J	DO5
60	80TF33,A	5†	33	80	300m	10m	1.0	125C	M117c
61	ZC733	5	33	100	50	6.5	8.7	175J	S125dØ
62	BZT03C33		33	600	25m	8.0			A333c
63	RD35DLM		33.8	10	100m	7.0		150J	S19s
64	50KZ28		34.6	50	5.0m				DO5§
65	RD35DK		35.0	10	100m	7.0		150J	S19s
66	10KZ39	10†	35.1	10	30m		.09		DO4§
67	50KZ30A		35.1	50	5.0m				DO5§

$V_Z \geq 36$ V

LINE No.	4 TYPE NUMBER	3 TOL. ± (%)	1 NOM. REF. VOLT. (V)	2 PD @ 25°C MAX (W)	TEST CUR. Izt (A)	MAX. DYN. IMP. (Ω)	TEMP. COEFF Tc MAX	MAX. TEMP (°C)	DWG. NO.
71	CTZC36CØ	1	36	5.0	30m	11 †	8.5	175A	A1ey
72	TZC36C	1	36	5.0	30m	11 †	8.5	175A	A1ey
73	CTZC36EØ	3	36	5.0	30m	11 †	8.5	175A	A1ey
74	TZC36E	3	36	5.0	30m	11 †	8.5	175A	A1ey
75	1N4031B	5	36	5.0	35m	12	9.3	180A	S82
76	1N4971	5	36	5.0	30m	11		175A	A146m
77	1N5365B	5	36	5.0	30m	11		200A	A1ee
78	BZV40C36	5	36	5.0	30m	11			A1ee
79	BZV48C36	5	36	5.0	30m	11	8.5	175J	DO27
80	BZV58C36	5	36	5.0	30m	11	8.5	175J	A1ee
81	CTZC36,A,B,DØ	5†	36	5.0	30m	11 †	8.5	175A	A1ey
82	DSZ4736	5	36	5.0	30m	11		175	A60ae
83	DSZ5736	5	36	5.0	30m	11	9.5	175A	A60r
84	MZ5736	5	36	5.0	30m	11	9.0	175A	A60f
85	TZC36,A,B,D	5†	36	5.0	30m	11 †	8.5	175A	A1ey
86	UDZ5736Ø	5	36	5.0	30m	11		175A	A356b
87	UZ4736	5	36	5.0	30m	11		175A	A380a
88	UZ5736	5	36	5.0	30m	11	9.5	175A	A380a
89	ZC36	5†	36	5.0	30m	11		150A	A1ey
90	ZC36B	5	36	5.0	30m	11			A1ey
91	1N4031A	10	36	5.0	35m	12	9.3	180A	S82
92	1N5365A	10	36	5.0	30m	11		200A	A1ee
93	DSZ4836	10	36	5.0	30m	11		175	A60ae
94	DSZ5836	10	36	5.0	30m	11	9.5	175A	A60r
95	MZ5836	10	36	5.0	30m	11	9.0	175A	A60f
96	UDZ5836Ø	10	36	5.0	30m	11		175A	A356b
97	UZ4836	10	36	5.0	30m	11		175A	A380a
98	UZ5836	10	36	5.0	30m	11	9.5	175A	A380a
99	ZC36A	10	36	5.0	30m	11			A1ey
100	1N4031	20	36	5.0	35m	12	9.3	180A	S82
101	1N5365	20	36	5.0	30m			200A	A1ee
102	MZ5936	20	36	5.0	30m	11	9.0	175A	A60f
103	UZ5936	20	36	5.0	30m	11	9.5	175A	A380a
104	UZ7736L	5	36	5.5	60m	12	9.0	175	A380c
105	UZ7836L	10	36	5.5	60m	12	9.0	175	A380a
106	UZ7936L	20	36	5.5	60m	12	9.0	175	A380c
107	6ALZ36A	5	36	6.0	30m			170J	A416
108	UDZ7736Ø	5	36	6.0	60m	12		175A	A356c
109	6ALZ36	10	36	6.0	30m			170J	A416
110	UDZ7836Ø	10	36	6.0	60m	12		175A	A356c
111	6ALZ36B	20	36	6.0	30m			170J	A416
112	Z3A36	1†	36	10	50m	4.0	10	200J	S457Ø
113	1N1364A	5	36	10	150m	5.0	9.0	155A	DO4Ø
114	1N1826A	5	36	10	150m	5.0	9.0	150A	S19a
115	1N2991B	5	36	10	70m	10		175C	DO4Ø
116	1N4215B	5	36	10	70m	10		200S	DO10
117	1N4275B	5	36	10	70m	10	8.5	175C	S134
118	1S5036,A	5†	36	10	50m	8.0	9.0	150C	DO4
119	1S6036A	5	36	10	50m	8.0	7.0	150	DO4
120	MZT2991B	5.0	36	10	70m	10		150J	Y220AC
121▼	SZ16-36-5-1	5.0	36	10	1.0m			175J	u5d
122▼	SZ16-36-5-25	5.0	36	10	25m			175J	u5d
123	UZ7736	5	36	10	60m	12	9.0	175	S277
124	Z3B36	5†	36	10	50m	4.0	10	200J	S457Ø
125	1N1364	10	36	10	150m	5.0	9.0	155A	DO4Ø
126	1N1826	10	36	10	150m	5.0	9.0	150A	S19a
127	1N1826CØ	10	36	10	150m	5.0	9.0	150A	S19a
128	1N2991A	10	36	10	70m	10		175C	DO4Ø
129	1N4215A	10	36	10	70m	10		200S	DO10
130	1N4275A	10	36	10	70m	10	8.5	175C	S134
131	1S284	10	36	10	100m	8.0	8.9	150J	S19g
132	1S5036CØ	10	36	10	50m	8.0	9.0	150C	DO4
133	1S6036	10	36	10	50m	8.0	7.0	150	DO4
134	C3C36Ø	10†	36	10	50m	4.0	10	200J	S457
135	MZT2991A	10	36	10	70m	10		150J	Y220AC
136▼	SZ16-36-10-1	10	36	10	1.0m			175J	u5d
137▼	SZ16-36-10-25	10	36	10	25m			175J	u5d
138	UZ7836	10	36	10	60m	12	9.0	175	S277
139	1N1364B	20	36	10	150m	5.0			S11e
140	1N2991	20	36	10	70m	10		175C	DO4Ø
141	1N4215	20	36	10	70m	10		200S	DO10
142	1N4275	20	36	10	70m	10	8.5	175C	S134
143	MZT2991	20	36	10	70m	10		150J	Y220AC
144▼	SZ16-36-20-1	20	36	10	1.0m			175J	u5d
145▼	SZ16-36-20-25	20	36	10	25m			175J	u5d
146	UZ7936	20	36	10	60m	12	9.0	175	S277
147	BZX98C36	5	36	12	10m	40	11	150J	S4af
148	BZY93C36	5	36	20	200m	4.0	32mV	175J	DO4Ø
149▼	SZ40-36-5-25	5.0	36	25	25m			175J	u5e
150	Z7B36	5†	36	25	200m	4.0	10	200J	S457Ø
151	ZX36	5	36	25	10	40	8.0	150J	S441
152▼	SZ40-36-10-25	10	36	25	25m			175J	u5e
153▼	SZ40-36-20-25	20	36	25	25m			175J	u5e
154	1N2825B	5	36	50	350m	3.5	8.5	175S	C5a
155	1N3326B	5	36	50	350m	3.5		175J	S4w
156	50T36,A,B	5†	36	50	350m	3.5	8.5		S19a
157	50Z36,A,B	5†	36	50	350m	3.5	8.5	175	C5a
158	MZT3326B	5.0	36	50	350m	3.5		150J	Y220AC
159	1N2825A	10	36	50	350m	3.5	8.5	175S	C5a
160	1N3326A	10	36	50	350m	3.5		175J	S4w
161	MZT3326A	10	36	50	350m	3.5		150J	Y220AC
162	1N2825	20	36	50	350m	3.5	8.5	175S	C5a
163	1N3326	20	36	50	350m	3.5		175J	S4w
164	MZT3326	20	36	50	350m	3.5		150J	Y220AC
165	Z6A36	1†	36	75	1.0	1.3	10	200J	DO5Ø
166	BZY91C36	5	36	75	1.0	1.3	9.0	175J	DO5Ø
167	Z6B36	5†	36	75	1.0	1.3	10	200J	DO5Ø
168	C6C36Ø	10†	36	75	1.0	1.3	10	200J	DO5
169	ZC736	5	36	100	50	7.0	8.8	175J	S125dØ
170	BZT03C36		36	300	10m	21			A333c
171	RD35DMN		36.5	10	100m	7.0		150J	S19s
172	50KZ30		37	50	5.0m				DO5§
173	10KZ43	10†	38.7	10	30m		.09		DO4§
174	50KZ33A		38.7	50	5.0m				DO5§
175	CTZC39CØ	1	39	5.0	30m	14 †	9.0	175A	A1ey
176	TZC39C	1	39	5.0	30m	14 †	9.0	175A	A1ey
177	CTZC39EØ	3	39	5.0	30m	14 †	9.0	175A	A1ey
178	TZC39E	3	39	5.0	30m	14 †	9.0	175A	A1ey
179	1N4032B	5	39	5.0	32m	15	9.4	180A	S82
180	1N4972	5	39	5.0	30m	14		175A	A146m
181	1N5366B	5	39	5.0	30m	14		200A	A1ee
182	BZV40C39	5	39	5.0	30m	14			A1ee
183	BZV48C39	5	39	5.0	30m	14	9.0	175J	DO27
184	BZV58C39	5	39	5.0	30m	14	9.0	175J	A1ee
185	CTZC39,A,B,DØ	5†	39	5.0	30m	14 †	9.0	175A	A1ey
186	DSZ4739	5	39	5.0	30m	14		175	A60ae
187	TZC39,A,B,D	5†	39	5.0	30m	14 †	9.0	175A	A1ey
188	UZ4739	5	39	5.0	30m	14		175A	A380a
189	ZC39	5†	39	5.0	30m	14		150A	A1ey
190	ZC39B	5	39	5.0	30m	14			A1ey
191	1N4032A	10	39	5.0	32m	15	9.4	180A	S82
192	1N5366A	10	39	5.0	30m	14		200A	A1ee
193	DSZ4839	10	39	5.0	30m	14		175	A60ae
194	UZ4839	10	39	5.0	30m	14		175A	A380a
195	ZC39A	10	39	5.0	30m	14			A1ey
196	D816G	15	39	5.0	10m	300 †	15	100C	S494
197	1N4032	20	39	5.0	32m	15	9.4	180A	S82
198	1N5366	20	39	5.0	30m			200A	A1ee

SYMBOLS AND CODES EXPLAINED IN INTERPRETER

10. VOLTAGE REGULATOR DIODES, POWER - $V_Z \geq 36$ V (Cont'd)

IN ORDER OF: (1) REF. VOLTAGE (2) MAX PD MAX (3) TOLERANCE & (4) TYPE NUMBER

LINE No.	4 TYPE NUMBER	3 TOL. ± (%)	1 NOM. REF. VOLT. (V)	2 PD @ 25°C MAX (W)	TEST CUR. Izt (A)	MAX. DYN. IMP. (Ω)	TEMP. COEFF Tc MAX	MAX. TEMP (°C)	DWG. NO.
1	6ALZ39A	5	39	6.0	30m			170J	A416
2	6ALZ39	10	39	6.0	30m			170J	A416
3	6ALZ39B	20	39	6.0	30m			170J	A416
4	Z3A39	1†	39	10	50m	5.0	10	200J	S457Ø
5	1N1365A	5	39	10	150m	5.0	9.0	155A	DO4Ø
6	1N1827A	5	39	10	150m	5.0	9.0	150A	S19a
7	1N1899A	5	39	10	8.0m	35	7.0	200A	S82
8	1N2992B	5	39	10	65m	11		175C	DO4Ø
9	1N4216B	5	39	10	65m	11		200S	DO10
10	1N4276B	5	39	10	65m	11	9.0	175C	S134
11	1S5039,A	5†	39	10	50m	8.0	9.0	150C	DO4
12	1S6039A	5	39	10	50m	8.0	7.0	150	DO4
13	MZT2992B	5.0	39	10	6.5m	11		150J	Y220AC
14▼	SZ16-39-5-1	5.0	39	10	1.0m			175J	u5d
15▼	SZ16-39-5-25	5.0	39	10	25m			175J	u5d
16	Z3B39	5†	39	10	50m	5.0	10	200J	S457Ø
17	1N1365	10	39	10	150m	5.0	9.0	155A	DO4Ø
18	1N1827	10	39	10	150m	5.0	9.0	150A	S19a
19	1N1827CØ	10	39	10	150m	5.0	9.0	150A	S19a
20	1N1899	10	39	10	8.0m	35	7.0	200A	S82
21	1N2992A	10	39	10	65m	11		175C	DO4Ø
22	1N4216A	10	39	10	65m	11		200S	DO10
23	1N4276A	10	39	10	65m	11	9.0	175C	S134
24	1S285	10	39	10	100m	8.0	8.9	150J	S19g
25	1S5039CØ	10	39	10	50m	8.0	9.0	150C	DO4
26	1S6039	10	39	10	50m	10	7.0	150	DO4
27	C3C39Ø	10†	39	10	50m	5.0	10	200J	S457
28	MZT2992A	10	39	10	6.5m	11		150J	Y220AC
29▼	SZ16-39-10-1	10	39	10	1.0m			175J	u5d
30▼	SZ16-39-10-25	10	39	10	25m			175J	u5d
31	1N1365B	20	39	10	150m	5.0			S11e
32	1N2992	20	39	10	65m	11		175C	DO4Ø
33	1N4216	20	39	10	65m	11		200S	DO10
34	1N4276	20	39	10	65m	11	9.0	175C	S134
35	MZT2992	20	39	10	6.5m	11		150J	Y220AC
36▼	SZ16-39-20-1	20	39	10	1.0m			175J	u5d
37▼	SZ16-39-20-25	20	39	10	25m			175J	u5d
38	BZX98C39	5	39	12	10m	40	11	150J	S4af
39	BZY93C39	5	39	20	200m	5.0	35mV	175J	DO4Ø
40▼	SZ40-39-5-25	5.0	39	25	25m			175J	u5e
41	Z7B39	5†	39	25	200m	5.0	10	200J	S457Ø
42	ZX39	5	39	25	10	40	8.0	150J	S441
43▼	SZ40-39-10-25	10	39	25	25m			175J	u5e
44▼	SZ40-39-20-25	20	39	25	25m			175J	u5e
45	1N2826B	5	39	50	320m	4.0	9.0	175S	C5a
46	1N3327B	5	39	50	320m	4.0		175J	S4w
47	50T39,A,B	5†	39	50	320m	4.0	9.0		S19e
48	50Z39,A,B	5†	39	50	320m	4.0	9.0	175	C5a
49	MZT3327B	5.0	39	50	320m	4.0		150J	Y220AC
50	1N2826A	10	39	50	320m	4.0	9.0	175S	C5a
51	1N3327A	10	39	50	320m	4.0		175J	S4w
52	MZT3327A	10	39	50	320m	4.0		150J	Y220AC
53	1N2826	20	39	50	320m	4.0	9.0	175S	C5a
54	1N3327	20	39	50	320m	4.0		175J	S4w
55	MZT3327	20	39	50	320m	4.0		150J	Y220AC
56	Z6A39	1†	39	75	500m	1.4	10	200J	DO5Ø
57	BZY91C39	5	39	75	500m	1.4	9.0	175J	DO5Ø
58	Z6B39	5†	39	75	500m	1.4	10	200J	DO5Ø
59	C6C39Ø	10†	39	75	500m	1.4	10	200J	DO5
60	80TF39,A	5†	39	80	260m	18m	1.0	125C	M117c
61	ZC739	5	39	100	25	19	8.9	175J	S125dØ
62	BZT03C39		39	300	10m	21			A333c
63	MZ5839	10	39.1	5.	30m	230	9.5	175J	A60as
64	1N5119	5	40	5.0	30m	14		175A	A146m
65	DSZ5740	5	40	5.0	30m	14	9.5	175A	A60r
66	MZ5740	5	40	5.0	30m	14	9.5	175A	A60f
67	UDZ5740Ø	5	40	5.0	30m	14		175A	A356b
68	UZ5740	5	40	5.0	30m	14	9.5	175A	A380a
69	DSZ5840	10	40	5.0	30m	14	9.5	175A	A60r
70	MZ5840	10	40	5.0	30m	14	9.5	175A	A60f
71	UDZ5840Ø	10	40	5.0	30m	14		175A	A356b
72	UZ5840	10	40	5.0	30m	14	9.5	175A	A380a
73	MZ5940	20	40	5.0	30m	14	9.5	175A	A60f
74	UZ5940	20	40	5.0	30m	14	9.5	175A	A380a
75	UZ7740L	5	40	5.5	60m	15	9.5	175	A380c
76	UZ7840L	10	40	5.5	60m	15	9.5	175	A380a
77	UZ7940L	20	40	5.5	60m	15	9.5	175	A380c
78	UDZ7740Ø	5	40	6.0	60m	15		175A	A356c
79	UDZ7840Ø	10	40	6.0	60m	15		175A	A356c
80	UZ7740	5	40	10	60m	15	9.5	175	S277
81	UZ7840	10	40	10	60m	15	9.5	175	S277
82	UZ7940	20	40	10	60m	15	9.5	175	S277
83	50KZ33		40.8	50	5.0m				DO5§
84	50KZ36A		42.1	50	5.0m				DO5§
85	10KZ47	10†	42.3	10	25m		.09		DO4§
86	CTZC43CØ	1	43	5.0	30m	20 †	9.0	175A	A1ey
87	TZC43C	1	43	5.0	30m	20 †	9.0	175A	A1ey
88	CTZC43EØ	3	43	5.0	30m	20 †	9.0	175A	A1ey
89	TZC43E	3	43	5.0	30m	20 †	9.0	175A	A1ey
90	1N4033B	5	43	5.0	29m	20	9.5	180A	S82
91	1N4973	5	43	5.0	30m	20		175A	A146m
92	1N5367B	5	43	5.0	30m	20		200A	A1ee
93	BZV40C43	5	43	5.0	30m	20			A1ee
94	BZV48C43	5	43	5.0	30m	20	9.0	175J	DO27
95	BZV58C43	5	43	5.0	30m	20	9.0	175J	A1ee
96	CTZC43,A,B,DØ	5†	43	5.0	30m	20 †	9.0	175A	A1ey
97	DSZ4743	5	43	5.0	30m	20		175	A60ae
98	TZC43,A,B,D	5†	43	5.0	30m	20 †	9.0	175A	A1ey
99	UZ4743	5	43	5.0	30m	20		175A	A380a
100	ZC43	5†	43	5.0	30m	20		150A	A1ey
101	ZC43B	5	43	5.0	30m	20			A1ey
102	1N4033A	10	43	5.0	29m	20	9.5	180A	S82
103	1N5367A	10	43	5.0	30m	20		200A	A1ee
104	DSZ4843	10	43	5.0	30m	20		175	A60ae
105	MZ5843	10	43.0	5.	30m	240	9.5	175J	A60as
106	UZ4843	10	43	5.0	30m	20		175A	A380a
107	ZC43A	10	43	5.0	30m	20			A1ey
108	1N4033	20	43	5.0	29m	20	9.5	180A	S82
109	1N5367	20	43	5.0	30m			200A	A1ee
110	6ALZ43A	5	43	6.0	30m			170J	A416
111	6ALZ43	10	43	6.0	30m			170J	A416
112	6ALZ43B	20	43	6.0	30m			170J	A416
113	Z3A43	1†	43	10	50m	6.5	10	200J	S457Ø
114	1N1366A	5	43	10	150m	6.0	9.0	155A	DO4Ø
115	1N1828A	5	43	10	150m	6.0	9.0	150A	S19a
116	1N2993B	5	43	10	60m	12		175C	DO4Ø
117	1N4217B	5	43	10	60m	12		200S	DO10
118	1N4277B	5	43	10	60m	12	9.0	175C	S134
119	1S5043,A	5†	43	10	50m	10	9.0	150C	DO4
120	1S6043A	5	43	10	50m	10	7.0	150	DO4
121	MZT2993B	5.0	43	10	60m	12		150J	Y220AC
122▼	SZ16-43-5-1	5.0	43	10	1.0m			175J	u5d
123▼	SZ16-43-5-25	5.0	43	10	25m			175J	u5d
124	Z3B43	5†	43	10	50m	6.5	10	200J	S457Ø
125	1N1366	10	43	10	150m	6.0	9.0	155A	DO4Ø
126	1N1828	10	43	10	150m	6.0	9.0	150A	S19a
127	1N1828CØ	10	43	10	150m	6.0	9.0	150A	S19a
128	1N2993A	10	43	10	60m	12		175C	DO4Ø
129	1N4217A	10	43	10	60m	12		200S	DO10
130	1N4277A	10	43	10	60m	12	9.0	175C	S134
131	1S286	10	43	10	60m	9.0	8.8	150J	S19g
132	1S5043CØ	10	43	10	50m	10	9.0	150C	DO4
133	1S6043	10	43	10	50m	10	7.0	150	DO4
134	C3C43Ø	10†	43	10	50m	6.5	10	200J	S457
135	MZT2993A	10	43	10	60m	12		150J	Y220AC
136▼	SZ16-43-10-1	10	43	10	1.0m			175J	u5d
137▼	SZ16-43-10-25	10	43	10	25m			175J	u5d
138	1N1366B	20	43	10	150m	6.0			S11e
139	1N2993	20	43	10	60m	12		175C	DO4Ø
140	1N4217	20	43	10	60m	12		200S	DO10
141	1N4277	20	43	10	60m	12	9.0	175C	S134
142	MZT2993	20	43	10	60m	12		150J	Y220AC
143▼	SZ16-43-20-1	20	43	10	1.0m			175J	u5d
144▼	SZ16-43-20-25	20	43	10	25m			175J	u5d
145	BZX98C43	5	43	12	10m	45	12	150J	S4af
146	BZY93C43	5	43	20	200m	6.5	40mV	175J	DO4Ø
147▼	SZ40-43-5-25	5.0	43	25	25m			175J	u5e
148	Z7B43	5†	43	25	200m	6.5	10	200J	S457Ø
149	ZX43	5	43	25	10	45	8.0	150J	S441
150▼	SZ40-43-20-25	20	43	25	25m			175J	u5e
151	1N2827B	5	43	50	290m	4.5	9.0	175S	C5a
152	1N3328B	5	43	50	290m	4.5		175J	S4w
153	50T43,A,B	5†	43	50	290m	4.5	9.0		S19e
154	50Z43,A,B	5†	43	50	290m	4.5	9.0	175	C5a
155	MZT3328B	5.0	43	50	290m	4.5		150J	Y220AC
156	1N2827A	10	43	50	290m	4.5	9.0	175S	C5a
157	1N3328A	10	43	50	290m	4.5		175J	S4w
158	MZT3328A	10	43	50	290m	4.5		150J	Y220AC
159	1N2827	20	43	50	290m	4.5	9.0	175S	C5a
160	1N3328	20	43	50	290m	4.5		175J	S4w
161	MZT3328	20	43	50	290m	4.5		150J	Y220AC
162	Z6A43	1†	43	75	500m	1.5	10	200J	DO5Ø
163	BZY91C43	5	43	75	500m	1.5	9.0	175J	DO5Ø
164	Z6B43	5†	43	75	500m	1.5	10	200J	DO5Ø
165	C6C43Ø	10†	43	75	500m	1.5	10	200J	DO5
166	ZC743	5	43	100	25	22	9.0	175J	S125dØ
167	BZT03C43		43	600	10m	24			A333c
168	50KZ36		44.5	50	5.0m				DO5§
169	CTZC45CØ	1	45	5.0	25m	20 †	9.0	175A	A1ey
170	TZC45C	1	45	5.0	25m	20 †	9.0	175A	A1ey
171	CTZC45EØ	3	45	5.0	25m	20 †	9.0	175A	A1ey
172	TZC45E	3	45	5.0	25m	20 †	9.0	175A	A1ey
173	1N5120	5	45	5.0	30m	20		175A	A146m
174	CTZC45,A,B,DØ	5†	45	5.0	25m	20 †	9.0	175A	A1ey
175	DSZ5745	5	45	5.0	30m	20	9.5	175A	A60r
176	MZ5745	5	45	5.0	30m	20	9.5	175A	A60f
177	TZC45,A,B,D	5†	45	5.0	25m	20 †	9.0	175A	A1ey
178	UDZ5745Ø	5	45	5.0	30m	20		175A	A356b
179	UZ5745	5	45	5.0	30m	20	9.5	175A	A380a
180	ZC45	5†	45	5.0	25m	20		150A	A1ey
181	ZC45B	5	45	5.0	25m	20			A1ey
182	DSZ5845	10	45	5.0	30m	20	9.5	175A	A60r
183	MZ5845	10	45	5.0	30m	20	9.5	175A	A60f
184	UDZ5845Ø	10	45	5.0	30m	20		175A	A356b
185	UZ5845	10	45	5.0	30m	20	9.5	175A	A380a
186	ZC45A	10	45	5.0	25m	20			A1ey
187	MZ5945	20	45	5.0	30m	20	9.5	175A	A60f
188	UZ5945	20	45	5.0	30m	20	9.5	175A	A380a
189	UZ7745L	5	45	5.5	50m	20	9.5	175	A380c
190	UZ7845L	10	45	5.5	50m	20	9.5	175	A380a
191	UZ7945L	20	45	5.5	50m	20	9.5	175	A380c
192	UDZ7745Ø	5	45	6.0	50m	20		175A	A356c
193	UDZ7845Ø	10	45	6.0	50m	20		175A	A356c
194	1N2994B	5	45	10	55m	13	9.0	175S	DO4
195	1N4218B	5	45	10	55m	13		200S	DO10
196	UZ7745	5	45	10	50m	20	9.5	175	S277
197	1N2994A	10	45	10	55m	13	9.0	175S	DO4
198	1N4218A	10	45	10	55m	13		200S	DO10
199	1S287	10	45	10	60m	10	8.8	150J	S19g

SYMBOLS AND CODES EXPLAINED IN INTERPRETER

10. VOLTAGE REGULATOR DIODES, POWER - $V_Z \geq 36$ V (Cont'd)

IN ORDER OF: (1) REF. VOLTAGE (2) MAX PD MAX (3) TOLERANCE & (4) TYPE NUMBER

LINE No.	4 TYPE NUMBER	3 TOL. ± (%)	1 NOM. REF. VOLT. (V)	2 PD @ 25°C MAX (W)	TEST CUR. Izt (A)	MAX. DYN. IMP. (Ω)	TEMP. COEFF Tc MAX	MAX. TEMP (°C)	DWG. NO.
1	UZ7845	10	45	10	50m	20	9.5	175	S277
2	1N2994	20	45	10	55m	13	9.0	175S	DO4
3	1N4218	20	45	10	55m	13		200S	DO10
4	UZ7945	20	45	10	50m	20	9.5	175	S277
5	1N2828B	5	45	50	280m	4.5	9.0	175S	C5a
6	1N3329B	5	45	50	280m	4.5		175J	S4w
7	50Z45,A,B	5†	45	50	280m	4.5	9.0	175	C5a
8	MZT3329B	5.0	45	50	280m	4.5		150J	Y220AC
9	1N2828A	10	45	50	280m	4.5	9.0	175S	C5a
10	1N3329A	10	45	50	280m	4.5		175J	S4w
11	MZT3329A	10	45	50	280m	4.5		150J	Y220AC
12	1N2828	20	45	50	280m	4.5	9.0	175S	C5a
13	1N3329	20	45	50	280m	4.5		175J	S4w
14	MZT3329	20	45	50	280m	4.5		150J	Y220AC
15	10KZ51	10†	45.9	10	25m		.09		DO4§
16	50KZ40A		46.8	50	5.0m				DO5§
17	CTZC47CØ	1	47	5.0	25m	25 †	9.0	175A	A1ey
18	TZC47C	1	47	5.0	25m	25 †	9.0	175A	A1ey
19	CTZC47EØ	3	47	5.0	25m	25 †	9.0	175A	A1ey
20	TZC47E	3	47	5.0	25m	25 †	9.0	175A	A1ey
21	1N4034B	5	47	5.0	27m	20	9.5	180A	S82
22	1N4974	5	47	5.0	25m	25		175A	A146m
23	1N5368B	5	47	5.0	25m	25		200A	A1ee
24	5M47ZS10,5	5†	47	5.0	25m	25		200J	A1ee
25	BZV40C47	5	47	5.0	25m	25			A1ee
26	BZV48C47	5	47	5.0	25m	25	9.0	175J	DO27
27	BZV58C47	5	47	5.0	25m	25	9.0	175J	A1ee
28	CTZC47,A,B,DØ	5†	47	5.0	25m	25 †	9.0	175A	A1ey
29	DSZ4747	5	47	5.0	25m	25		175	A60ae
30	TZC47,A,B,D	5†	47	5.0	25m	25 †	9.0	175A	A1ey
31	UZ4747	5	47	5.0	25m	25		175A	A380a
32	ZC47	5†	47	5.0	25m	25		150A	A1ey
33	ZC47B	5	47	5.0	25m	25			A1ey
34	1N4034A	10	47	5.0	27m	20	9.5	180A	S82
35	1N5368A	10	47	5.0	25m	25		200A	A1ee
36	DSZ4847	10	47	5.0	25m	25		175	A60ae
37	MZ5847	10	47.0	5.	25m	250	9.5	175J	A60as
38	UZ4847	10	47	5.0	25m	25		175A	A380a
39	ZC47A	10	47	5.0	25m	25			A1ey
40	D816D	15	47	5.0	10m	300 †	15	100C	S494
41	1N4034	20	47	5.0	27m	20	9.5	180A	S82
42	1N5368	20	47	5.0	25m			200A	A1ee
43	6ALZ47A	5	47	6.0	25m				
44	6ALZ47	10	47	6.0	25m			170J	A416
45	6ALZ47B	20	47	6.0	25m			170J	A416
46	Z3A47	1†	47	10	50m	7.0	10	200J	S457Ø
47	1N1367A	5	47	10	150m	7.0	9.0	155A	DO4Ø
48	1N1829A	5	47	10	150m	7.0	9.0	150A	S19a
49	1N1900A	5	47	10	8.0m	50	7.2	200A	S82
50	1N2995B	5	47	10	55m	14		175C	DO4Ø
51	1N4219B	5	47	10	55m	14		200S	DO10
52	1N4278B	5	47	10	55m	14	9.0	175C	S134
53	1S5047,A	5†	47	10	50m	10	9.0	150C	DO4
54	1S6047A	5	47	10	50m	10	7.0	150	DO4
55	MZT2995B	5.0	47	10	55m	14		150J	Y220AC
56▼	SZ16-47-5-1	5.0	47	10	1.0m			175J	u5d
57▼	SZ16-47-5-25	5.0	47	10	25m			175J	u5d
58	Z3B47	5†	47	10	50m	7.0	10	200J	S457Ø
59	1N1367	10	47	10	150m	7.0	9.0	155A	DO4Ø
60	1N1829	10	47	10	150m	7.0	9.0	150A	S19a
61	1N1829CØ	10	47	10	150m	7.0	9.0	150A	S19a
62	1N1900	10	47	10	8.0m	50	7.2	200A	S82
63	1N2995A	10	47	10	55m	14		175C	DO4Ø
64	1N4219A	10	47	10	55m	14		200S	DO10
65	1N4278A	10	47	10	55m	14	9.0	175C	S134
66	1S288	10	47	10	60m	10	9.1	150J	S19g
67	1S5047CØ	10	47	10	50m	10	9.0	150C	DO4
68	1S6047	10	47	10	50m	10	7.0	150	DO4
69	C3C47Ø	10†	47	10	50m	7.0	10	200J	S457
70	MZT2995A	10	47	10	55m	14		150J	Y220AC
71▼	SZ16-47-10-1	10	47	10	1.0m			175J	u5d
72▼	SZ16-47-10-25	10	47	10	25m			175J	u5d
73	1N1367B	20	47	10	150m	7.0			S11e
74	1N2995	20	47	10	55m	14		175C	DO4Ø
75	1N4219	20	47	10	55m	14		200S	DO10
76	1N4278	20	47	10	55m	14	9.0	175C	S134
77	MZT2995	20	47	10	55m	14		150J	Y220AC
78▼	SZ16-47-20-1	20	47	10	1.0m			175J	u5d
79▼	SZ16-47-20-25	20	47	10	25m			175J	u5d
80	BZX98C47	5	47	12	10m	45	12	150J	S4af
81	BZY93C47	5	47	20	200m	7.0	45mV	175J	DO4Ø
82▼	SZ40-47-5-25	5.0	47	25	25m			175J	u5e
83	Z7B47	5†	47	25	200m	7.0	10	200J	S457Ø
84	ZX47	5	47	25	10	45	9.0	150J	S441
85▼	SZ40-47-10-25	10	47	25	25m			175J	u5e
86▼	SZ40-47-20-25	20	47	25	25m			175J	u5e
87	1N2829B	5	47	50	270m	5.0	9.0	175S	C5a
88	1N3330B	5	47	50	270m	5.0		175J	S4w
89	50T47,A,B	5†	47	50	270m	5.0	9.0		S19e
90	50Z47,A,B	5†	47	50	270m	5.0	9.0	175	C5a
91	MZT3330B	5.0	47	50	270m	5.0		150J	Y220AC
92	1N2829A	10	47	50	270m	5.0	9.0	175S	C5a
93	1N3330A	10	47	50	270m	5.0		175J	S4w
94	MZT3330A	10	47	50	270m	5.0		150J	Y220AC
95	1N2829	20	47	50	270m	5.0	9.0	175S	C5a
96	1N3330	20	47	50	270m	5.0		175J	S4w
97	MZT3330	20	47	50	270m	5.0		150J	Y220AC
98	Z6A47	1†	47	75	500m	1.7	10	200J	DO5Ø
99	BZY91C47	5	47	75	500m	1.7	9.0	175J	DO5Ø
100	Z6B47	5†	47	75	500m	1.7	10	200J	DO5Ø
101	C6C47Ø	10†	47	75	500m	1.7	10	200J	DO5
102	80TF47,A	5†	47	80	210m	21m	1.0	125C	M117c
103	ZC747	5	47	100	25	25	9.1	175J	S125dØ
104	BZT03C47		47	300	10m	24			A333c
105	50KZ40		49.4	50	5.0m				DO5§

$V_Z \geq 50$ V

LINE No.	4 TYPE NUMBER	3 TOL. ± (%)	1 NOM. REF. VOLT. (V)	2 PD @ 25°C MAX (W)	TEST CUR. Izt (A)	MAX. DYN. IMP. (Ω)	TEMP. COEFF Tc MAX	MAX. TEMP (°C)	DWG. NO.
109	CTZC50CØ	1	50	5.0	25m	25 †	9.0	175A	A1ey
110	TZC50C	1	50	5.0	25m	25 †	9.0	175A	A1ey
111	CTZC50EØ	3	50	5.0	25m	25 †	9.0	175A	A1ey
112	TZC50E	3	50	5.0	25m	25 †	9.0	175A	A1ey
113	1N5121	5	50	5.0	25m	25		175A	A146m
114	CTZC50,A,B,DØ	5†	50	5.0	25m	25 †	9.0	175A	A1ey
115	DSZ5750	5	50	5.0	25m	25	9.5	175A	A60r
116	MZ5750	5	50	5.0	25m	25	9.5	175A	A60f
117	TZC50,A,B,D	5†	50	5.0	25m	25 †	9.0	175A	A1ey
118	UZ5750	5	50	5.0	25m	25	9.5	175A	A380a
119	ZC50	5†	50	5.0	25m	25		150A	A1ey
120	ZC50B	5	50	5.0	25m	25			A1ey
121	DSZ5850	10	50	5.0	25m	25	9.5	175A	A60r
122	MZ5850	10	50	5.0	25m	25	9.5	175A	A60f
123	UZ5850	10	50	5.0	25m	25	9.5	175A	A380a
124	ZC50A	10	50	5.0	25m	25			A1ey
125	MZ5950	20	50	5.0	25m	25	9.5	175A	A60f
126	UZ5950	20	50	5.0	25m	25	9.5	175A	A380a
127	UZ7750L	5	50	5.5	50m	22	9.5	175	A380c
128	UZ7850L	10	50	5.5	50m	22	9.5	175	A380a
129	UZ7950L	20	50	5.5	50m	22	9.5	175	A380c
130	1N2996B	5	50	10	50m	15	9.0	175S	DO4
131	1N4220B	5	50	10	50m	15		200S	DO10
132	MZT2996B	5.0	50	10	50m	15		150J	Y220AC
133	UZ7750	5	50	10	50m	22	9.5	175	S277
134	1N2996A	10	50	10	50m	15	9.0	175S	DO4
135	1N4220A	10	50	10	50m	15		200S	DO10
136	1S289	10	50	10	60m	11	9.0	150J	S19g
137	MZT2996A	10	50	10	50m	15		150J	Y220AC
138	UZ7850	10	50	10	50m	22	9.5	175	S277
139	1N2937	15	50	10	25m	75		175S	DO4
140	1N2996	20	50	10	50m	15	9.0	175S	DO4
141	1N4220	20	50	10	50m	15		200S	DO10
142	MZT2996	20	50	10	50m	15		150J	Y220AC
143	UZ7950	20	50	10	50m	22	9.5	175	S277
144	1N2830B	5	50	50	250m	5.0	9.0	175S	C5a
145	1N3331B	5	50	50	250m	5.0		175J	S4w
146	50Z50,A,B	5†	50	50	250m	5.0	9.0	175	C5a
147	MZT3331B	5.0	50	50	250m	5.0		150J	Y220AC
148	1N2830A	10	50	50	250m	5.0	9.0	175S	C5a
149	1N3331A	10	50	50	250m	5.0		175J	S4w
150	MZT3331A	10	50	50	250m	5.0		150J	Y220AC
151	1N2830	20	50	50	250m	5.0	9.0	175S	C5a
152	1N3331	20	50	50	250m	5.0		175J	S4w
153	MZT3331	20	50	50	250m	5.0		150J	Y220AC
154	50KZ43A		50.3	50	5.0m				DO5§
155	10KZ56	10†	50.4	10	20m		.09		DO4§
156	CTZC51CØ	1	51	5.0	25m	27 †	9.0	175A	A1ey
157	TZC51C	1	51	5.0	25m	27 †	9.0	175A	A1ey
158	CTZC51EØ	3	51	5.0	25m	27 †	9.0	175A	A1ey
159	TZC51E	3	51	5.0	25m	27 †	9.0	175A	A1ey
160	1N4035B	5	51	5.0	25m	25	9.6	180A	S82
161	1N4975	5	51	5.0	25m	27		175A	A146m
162	1N5369B	5	51	5.0	25m	27		200A	A1ee
163	BZV40C51	5	51	5.0	25m	27			A1ee
164	BZV48C51	5	51	5.0	25m	27	9.0	175J	DO27
165	BZV58C51	5	51	5.0	25m	27	9.0	175J	A1ee
166	CTZC51,A,B,DØ	5†	51	5.0	25m	27 †	9.0	175A	A1ey
167	DSZ4751	5	51	5.0	25m	27		175	A60ae
168	TZC51,A,B,D	5†	51	5.0	25m	27 †	9.0	175A	A1ey
169	UZ4751	5	51	5.0	25m	27		175A	A380a
170	ZC51	5†	51	5.0	25m	27		150A	A1ey
171	ZC51B	5	51	5.0	25m	27			A1ey
172	1N4035A	10	51	5.0	25m	25	9.6	180A	S82
173	1N5369A	10	51	5.0	25m	27		200A	A1ee
174	DSZ4851	10	51	5.0	25m	27		175	A60ae
175	MZ5851	10	51.0	5.	25m	270	9.5	175J	A60as
176	UZ4851	10	51	5.0	25m	27		175A	A380a
177	ZC51A	10	51	5.0	25m	27			A1ey
178	1N4035	20	51	5.0	25m	25	9.6	180A	S82
179	1N5369	20	51	5.0	25m			200A	A1ee
180	6ALZ51A	5	51	6.0	25m			170J	A416
181	6ALZ51	10	51	6.0	25m			170J	A416
182	6ALZ51B	20	51	6.0	25m			170J	A416
183	Z3A51	1†	51	10	50m	7.5	10	200J	S457Ø
184	1N1368A	5	51	10	150m	8.0	100m	155A	DO4Ø
185	1N1830A	5	51	10	150m	8.0	10	150A	S19a
186	1N2997B	5	51	10	50m	15		175C	DO4Ø
187	1N4221B	5	51	10	50m	15		200S	DO10
188	1N4279B	5	51	10	50m	15	9.0	175C	S134
189	1S5051,A	5†	51	10	50m	10	10	150C	DO4
190	1S6051A	5	51	10	50m	10	8.0	150	DO4
191	MZT2997B	5.0	51	10	50m	15		150J	Y220AC
192▼	SZ16-51-5-1	5.0	51	10	1.0m			175J	u5d
193▼	SZ16-51-5-25	5.0	51	10	25m			175J	u5d
194	Z3B51	5†	51	10	50m	7.5	10	200J	S457Ø
195	1N1368	10	51	10	150m	8.0	100m	155A	DO4Ø
196	1N1830	10	51	10	150m	8.0	10	150A	S19a
197	1N1830CØ	10	51	10	150m	8.0	10	150A	S19a
198	1N2997A	10	51	10	50m	15		175C	DO4Ø
199	1N4221A	10	51	10	50m	15		200S	DO10
200	1N4279A	10	51	10	50m	15	9.0	175C	S134
201	1S5051CØ	10	51	10	50m	10	10	150C	DO4
202	1S6051	10	51	10	50m	10	8.0	150	DO4
203	C3C51Ø	10†	51	10	50m	7.5	10	200J	S457

SYMBOLS AND CODES EXPLAINED IN INTERPRETER

10. VOLTAGE REGULATOR DIODES, POWER - $V_Z \geq 50$ V (Cont'd)

IN ORDER OF: (1) REF. VOLTAGE (2) MAX PD MAX (3) TOLERANCE & (4) TYPE NUMBER

LINE No.	4 TYPE NUMBER	3 TOL. ± (%)	1 NOM. REF. VOLT. (V)	2 PD @ 25°C MAX (W)	TEST CUR. Izt (A)	MAX. DYN. IMP. (Ω)	TEMP. COEFF Tc MAX	MAX. TEMP (°C)	DWG. NO.
1	MZT2997A	10	51	10	50m	15		150J	Y220AC
2▼	SZ16-51-10-1	10	51	10	1.0m			175J	u5d
3▼	SZ16-51-10-25	10	51	10	25m			175J	u5d
4	1N1368B	20	51	10	150m	8.0			S11e
5	1N2997	20	51	10	50m	15		175C	DO4Ø
6	1N4221	20	51	10	50m	15		200S	DO10
7	1N4279	20	51	10	50m	15	9.0	175C	S134
8	MZT2997	20	51	10	50m	15		150J	Y220AC
9▼	SZ16-51-20-1	20	51	10	1.0m			175J	u5d
10▼	SZ16-51-20-25	20	51	10	25m			175J	u5d
11	BZX98C51	5	51	12	10m	60	12	150J	S4af
12	BZY93C51	5	51	20	200m	7.5	50mV	175J	DO4Ø
13▼	SZ40-51-5-25	5.0	51	25	25m			175J	u5e
14	Z7B51	5†	51	25	200m	7.5	10	200J	S457Ø
15▼	SZ40-51-10-25	10	51	25	25m			175J	u5e
16▼	SZ40-51-20-25	20	51	25	25m			175J	u5e
17	1N2831B	5	51	50	245m	5.2	9.0	175S	C5a
18	1N3332B	5	51	50	245m	5.2		175J	S4w
19	50T51,A,B	5†	51	50	240m	5.2	9.0		S19e
20	50Z51,A,B	5†	51	50	245m	5.2	9.0	175	C5a
21	MZT3332B	5.0	51	50	245m	5.2		150J	Y220AC
22	1N2831A	10	51	50	245m	5.2	9.0	175S	C5a
23	1N3332A	10	51	50	245m	5.2		175J	S4w
24	MZT3332A	10	51	50	245m	5.2		150J	Y220AC
25	1N2831	20	51	50	245m	5.2	9.0	175S	C5a
26	1N3332	20	51	50	245m	5.2		175J	S4w
27	MZT3332	20	51	50	245m	5.2		150J	Y220AC
28	Z6A51	1†	51	75	500m	1.8	10	200J	DO5Ø
29	BZY91C51	5	51	75	500m	1.8	9.0	175J	DO5Ø
30	Z6B51	5†	51	75	500m	1.8	10	200J	DO5Ø
31	C6C51Ø	10†	51	75	500m	1.8	10	200J	DO5
32	ZC751	5	51	100	500m	1.4		175A	S533
33	BZT03C51		51	300	10m	25			A333c
34	CTZC52CØ	1	52	5.0	23m	30 †	9.0	175A	A1ey
35	TZC52C	1	52	5.0	23m	30 †	9.0	175A	A1ey
36	CTZC52EØ	3	52	5.0	23m	30 †	9.0	175A	A1ey
37	TZC52E	3	52	5.0	23m	30 †	9.0	175A	A1ey
38	CTZC52,A,B,DØ	5†	52	5.0	23m	30 †	9.0	175A	A1ey
39	TZC52,A,B,D	5†	52	5.0	23m	30 †	9.0	175A	A1ey
40	ZC52	5†	52	5.0	23m	30		150A	A1ey
41	ZC52B	5	52	5.0	23m	30			A1ey
42	ZC52A	10	52	5.0	23m	30			A1ey
43	1N2998B	5	52	10	50m	15	9.0	175S	DO4
44	1N4222B	5	52	10	50m	15		200S	DO10
45	MZT2998B	5.0	52	10	50m	15		150J	Y220AC
46	1N2998A	10	52	10	50m	15	9.0	175S	DO4
47	1N4222A	10	52	10	50m	15		200S	DO10
48	1S290	10	52	10	60m	12	9.0	150J	S19g
49	MZT2998A	10	52	10	50m	15		150J	Y220AC
50	1N2998	20	52	10	50m	15	9.0	175S	DO4
51	1N4222	20	52	10	50m	15		200S	DO10
52	MZT2998	20	52	10	50m	15		150J	Y220AC
53	1N3333B	5	52	50	240m	5.5		175J	S4w
54	50Z52,A,B	5†	52	50	240m	5.5	9.0	175	C5a
55	MZT3333B	5.0	52	50	240m	5.5		150J	Y220AC
56	1N3333A	10	52	50	240m	5.5		175J	S4w
57	MZT3333A	10	52	50	240m	5.5		150J	Y220AC
58	1N3333	20	52	50	240m	5.5		175J	S4w
59	MZT3333	20	52	50	240m	5.5		150J	Y220AC
60	50KZ45A		52.7	50	5.0m				DO5§
61	50KZ43		53.1	50	5.0m				DO5§
62	50KZ45		55.6	50	5.0m				DO5§
63	10KZ62	10†	55.8	10	20m		.10		DO4§
64	CTZC56CØ	1	56	5.0	20m	35 †	9.0	175A	A1ey
65	TZC56C	1	56	5.0	20m	35 †	9.0	175A	A1ey
66	CTZC56EØ	3	56	5.0	20m	35 †	9.0	175A	A1ey
67	TZC56E	3	56	5.0	20m	35 †	9.0	175A	A1ey
68	1N4036B	5	56	5.0	22m	30	9.6	180A	S82
69	1N4976	5	56	5.0	20m	35		175A	A146m
70	1N5370B	5	56	5.0	20m	35		200A	A1ee
71	BZV40C56	5	56	5.0	20m	35			A1ee
72	BZV48C56	5	56	5.0	20m	35	9.0	175J	DO27
73	BZV58C56	5	56	5.0	20m	35	9.0	175J	A1ee
74	CTZC56,A,B,DØ	5†	56	5.0	20m	35 †	9.0	175A	A1ey
75	DSZ4756	5	56	5.0	20m	35		175	A60ae
76	DSZ5756	5	56	5.0	20m	35	9.5	175A	A60r
77	MZ5756	5	56	5.0	20m	35	9.5	175A	A60f
78	TZC56,A,B,D	5†	56	5.0	20m	35 †	9.0	175A	A1ey
79	UZ4756	5	56	5.0	20m	35		175A	A380a
80	UZ5756	5	56	5.0	20m	35	9.5	175A	A380a
81	ZC56	5†	56	5.0	20m	35		150A	A1ey
82	ZC56B	5	56	5.0	20m	35			A1ey
83	1N4036A	10	56	5.0	22m	30	9.6	180A	S82
84	1N5370A	10	56	5.0	20m	35		200A	A1ee
85	DSZ4856	10	56	5.0	20m	35		175	A60ae
86	DSZ5856	10	56	5.0	20m	35	9.5	175A	A60r
87	MZ5856	10	56	5.0	20m	35	9.5	175A	A60f
88	UZ4856	10	56	5.0	20m	35		175A	A380a
89	UZ5856	10	56	5.0	20m	35	9.5	175A	A380a
90	ZC56A	10	56	5.0	20m	35			A1ey
91	D817A	15	56	5.0	5.0m	400 †	18	100C	S494
92	1N4036	20	56	5.0	22m	30	9.6	180A	S82
93	1N5370	20	56	5.0	20m			200A	A1ee
94	MZ5956	20	56	5.0	20m	35	9.5	175A	A60f
95	UZ5956	20	56	5.0	20m	35	9.5	175A	A380a
96	UZ7756L	5	56	5.5	40m	30	9.5	175	A380c
97	UZ7856L	10	56	5.5	40m	30	9.5	175	A380a
98	UZ7956L	20	56	5.5	40m	30	9.5	175	A380c
99	6ALZ56A	5	56	6.0	20m			170J	A416
100	6ALZ56	10	56	6.0	20m			170J	A416
101	6ALZ56B	20	56	6.0	20m			170J	A416
102	Z3A56	1†	56	10	50m	8.0	10	200J	S457Ø
103	1N1369A	5	56	10	150m	9.0	100m	155A	DO4Ø
104	1N1831A	5	56	10	150m	9.0	10	150A	S19a
105	1N1901A	5	56	10	8.0m	75	7.5	200A	S82
106	1N2999B	5	56	10	45m	16		175C	DO4Ø
107	1N4223B	5	56	10	45m	16		200S	DO10
108	1N4280B	5	56	10	45m	16	9.0	175C	S134
109	1S5056,A	5†	56	10	50m	10	10	150C	DO4
110	1S6056A	5	56	10	50m	10	8.0	150	DO4
111	MZT2999B	5.0	56	10	45m	16		150J	Y220AC
112▼	SZ16-56-5-1	5.0	56	10	1.0m			175J	u5d
113▼	SZ16-56-5-25	5.0	56	10	25m			175J	u5d
114	UZ7756	5	56	10	40m	30	9.5	175	S277
115	Z3B56	5†	56	10	50m	8.0	10	200J	S457Ø
116	1N1369	10	56	10	150m	9.0	100m	155A	DO4Ø
117	1N1831	10	56	10	150m	9.0	10	150A	S19a
118	1N1831CØ	10	56	10	150m	9.0	10	150A	S19a
119	1N1901	10	56	10	8.0m	75	7.5	200A	S82
120	1N2999A	10	56	10	45m	16		175C	DO4Ø
121	1N4223A	10	56	10	45m	16		200S	DO10
122	1N4280A	10	56	10	45m	16	9.0	175C	S134
123	1S291	10	56	10	60m	12	8.9	150J	S19g
124	1S5056CØ	10	56	10	50m	10	10	150C	DO4
125	1S6056	10	56	10	50m	15	8.0	150	DO4
126	C3C56Ø	10†	56	10	50m	8.0	10	200J	S457
127	MZT2999A	10	56	10	45m	16		150J	Y220AC
128▼	SZ16-56-10-1	10	56	10	1.0m			175J	u5d
129▼	SZ16-56-10-25	10	56	10	25m			175J	u5d
130	UZ7856	10	56	10	40m	30	9.5	175	S277
131	1N1369B	20	56	10	150m	9.0			S11e
132	1N2999	20	56	10	45m	16		175C	DO4Ø
133	1N4223	20	56	10	45m	16		200S	DO10
134	1N4280	20	56	10	45m	16	9.0	175C	S134
135	MZT2999	20	56	10	45m	16		150J	Y220AC
136▼	SZ16-56-20-1	20	56	10	1.0m			175J	u5d
137▼	SZ16-56-20-25	20	56	10	25m			175J	u5d
138	BZX98C56	5	56	12	10m	60	12	150J	S4af
139	BZY93C56	5	56	20	200m	8.0	55mV	175J	DO4Ø
140▼	SZ40-56-5-25	5.0	56	25	25m			175J	u5e
141	Z7B56	5†	56	25	200m	8.0	10	200J	S457Ø
142	ZX56	5	56	25	10	60	9.5	150J	S441
143▼	SZ40-56-10-25	10	56	25	25m			175J	u5e
144▼	SZ40-56-20-25	20	56	25	25m			175J	u5e
145	1N2832B	5	56	50	220m	6.0	9.0	175S	C5a
146	1N3334B	5	56	50	220m	6.0		175J	S4w
147	50Z56,A,B	5†	56	50	220m	6.0	9.0	175	C5a
148	MZT3334B	5.0	56	50	220m	6.0		150J	Y220AC
149	1N2832A	10	56	50	220m	6.0	9.0	175S	C5a
150	1N3334A	10	56	50	220m	6.0		175J	S4w
151	MZT3334A	10	56	50	220m	6.0		150J	Y220AC
152	1N2832	20	56	50	220m	6.0	9.0	175S	C5a
153	1N3334	20	56	50	220m	6.0		175J	S4w
154	MZT3334	20	56	50	220m	6.0		150J	Y220AC
155	Z6A56	1†	56	75	500m	2.0	10	200J	DO5Ø
156	BZY91C56	5	56	75	500m	2.0	9.0	175J	DO5Ø
157	Z6B56	5†	56	75	500m	2.0	10	200J	DO5Ø
158	C6C56Ø	10†	56	75	500m	2.0	10	200J	DO5
159	80TF56,A	5†	56	80	180m	25m	1.0	125C	M117c
160	ZC756	5	56	100	25	35	9.1	175J	S125dØ
161	50KZ48A		56.1	50	5.0m				DO5§
162	50KZ48		59.2	50	5.0m				DO5§
163	1N5122	5	60	5.0	20m	40		175A	A146m
164	1N5371B	5	60	5.0	20m	40		200A	A1ee
165	BZV40C60	5	60	5.0	20m	40			A1ee
166	DSZ5760	5	60	5.0	20m	40	10	175A	A60r
167	MZ5760	5	60	5.0	20m	40	9.5	175A	A60f
168	UDZ5760Ø	5	60	5.0	20m	40		175A	A356b
169	UZ5760	5	60	5.0	20m	40	10	175A	A380a
170	1N5371A	10	60	5.0	20m	40		200A	A1ee
171	DSZ5860	10	60	5.0	20m	40	10	175A	A60r
172	MZ5860	10	60	5.0	20m	40	9.5	175A	A60f
173	UDZ5860Ø	10	60	5.0	20m	40		175A	A356b
174	UZ5860	10	60	5.0	20m	40	10	175A	A380a
175	1N5371	20	60	5.0	20m			200A	A1ee
176	MZ5960	20	60	5.0	20m	40	9.5	175A	A60f
177	UZ5960	20	60	5.0	20m	40	10	175A	A380a
178	UZ7760L	5	60	5.5	40m	35	9.5	175	A380c
179	UZ7860L	10	60	5.5	40m	35	9.5	175	A380a
180	UZ7960L	20	60	5.5	40m	35	9.5	175	A380c
181	6ALZ60A	5	60	6.0	20m			170J	A416
182	UDZ7760Ø	5	60	6.0	40m	35		175A	A356c
183	6ALZ60	10	60	6.0	20m			170J	A416
184	UDZ7860Ø	10	60	6.0	40m	35		175A	A356c
185	6ALZ60B	20	60	6.0	20m			170J	A416
186	UZ7760	5	60	10	40m	35	9.5	175	S277
187	UZ7860	10	60	10	40m	35	9.5	175	S277
188	UZ7960	20	60	10	40m	35	9.5	175	S277
189	10KZ66	10†	61.2	10	20m		.10		DO4§
190	CTZC62CØ	1	62	5.0	20m	42 †	9.0	175A	A1ey
191	TZC62C	1	62	5.0	20m	42 †	9.0	175A	A1ey
192	CTZC62EØ	3	62	5.0	20m	42 †	9.0	175A	A1ey
193	TZC62E	3	62	5.0	20m	42 †	9.0	175A	A1ey
194	1N4037B	5	62	5.0	20m	50	9.7	180A	S82
195	1N4889	5	62	5.0	20m	42		175A	A60q
196	1N4977	5	62	5.0	20m	42		175A	A146m
197	1N5372B	5	62	5.0	20m	42		200A	A1ee
198	BZV40C62	5	62	5.0	20m	42			A1ee
199	BZV48C62	5	62	5.0	20m	42	9.0	175J	DO27
200	BZV58C62	5	62	5.0	20m	42	9.0	175J	A1ee

SYMBOLS AND CODES EXPLAINED IN INTERPRETER

10. VOLTAGE REGULATOR DIODES, POWER - $V_Z \geq 50$ V (Cont'd)

IN ORDER OF: (1) REF. VOLTAGE (2) MAX PD MAX (3) TOLERANCE & (4) TYPE NUMBER

LINE No.	4 TYPE NUMBER	3 TOL. ± (%)	1 NOM. REF. VOLT. (V)	2 PD @ 25°C MAX (W)	TEST CUR. Izt (A)	MAX. DYN. IMP. (Ω)	TEMP. COEFF Tc MAX	MAX. TEMP (°C)	DWG. NO.
1	CTZC62,A,B,DØ								
		5†	62	5.0	20m	42 †	9.0	175A	A1ey
2	DSZ4762	5	62	5.0	20m	42		175	A60ae
3	TZC62,A,B,D								
		5†	62	5.0	20m	42 †	9.0	175A	A1ey
4	UZ4762	5	62	5.0	20m	42		175A	A380a
5	ZC62	5†	62	5.0	20m	42		150A	A1ey
6	ZC62B	5	62	5.0	20m	42			A1ey
7	1N4037A	10	62	5.0	20m	50	9.7	180A	S82
8	1N5372A	10	62	5.0	20m	42		200A	A1ee
9	DSZ4862	10	62	5.0	20m	42		175	A60ae
10	UZ4862	10	62	5.0	20m	42		175A	A380a
11	ZC62A	10	62	5.0	20m	42			A1ey
12	1N4037	20	62	5.0	20m	50	9.7	180A	S82
13	1N5372	20	62	5.0	20m			200A	A1ee
14	6ALZ62A	5	62	6.0	20m			170J	A416
15	6ALZ62	10	62	6.0	20m			170J	A416
16▼	BZW03/D62	10	62	6.0	20m	42	13	175J	A333e
17	6ALZ62B	20	62	6.0	20m			170J	A416
18	Z3A62	1†	62	10	50m	9.0	11	200J	S457Ø
19	1N1370A	5	62	10	50m	12	100m	155A	DO4Ø
20	1N1832A	5	62	10	50m	12	10	150A	S19a
21	1N3000B	5	62	10	40m	17		175C	DO4Ø
22	1N4224B	5	62	10	40m	17		200S	DO10
23	1N4281B	5	62	10	40m	17	9.0	175C	S134
24	1S5062,A	5†	62	10	50m	15	10	150C	DO4
25	1S6062A	5	62	10	50m	15	8.0	150	DO4
26	MZT3000B	5.0	62	10	40m	17		150J	Y220AC
27▼	SZ16-62-5-1								
		5.0	62	10	1.0m			175J	u5d
28▼	SZ16-62-5-25								
		5.0	62	10	25m			175J	u5d
29	Z3B62	5†	62	10	50m	9.0	11	200J	S457Ø
30	1N1370	10	62	10	50m	12	100m	155A	DO4Ø
31	1N1832	10	62	10	50m	12	10	150A	S19a
32	1N1832CØ	10	62	10	50m	12	10	150A	S19a
33	1N3000A	10	62	10	40m	17		175C	DO4Ø
34	1N4224A	10	62	10	40m	17		200S	DO10
35	1N4281A	10	62	10	40m	17	9.0	175C	S134
36	1S292	10	62	10	40m	13	8.9	150J	S19g
37	1S5062CØ	10	62	10	50m	15	10	150C	DO4
38	1S6062	10	62	10	50m	25	8.0	150	DO4
39	C3C62Ø	10†	62	10	50m	9.0	11	200J	S457
40	MZT3000A	10	62	10	40m	17		150J	Y220AC
41▼	SZ16-62-10-1								
		10	62	10	1.0m			175J	u5d
42▼	SZ16-62-10-25								
		10	62	10	25m			175J	u5d
43	1N1370B	20	62	10	50m	12			S11e
44	1N3000	20	62	10	40m	17		175C	DO4Ø
45	1N4224	20	62	10	40m	17		200S	DO10
46	1N4281	20	62	10	40m	17	9.0	175C	S134
47	MZT3000	20	62	10	40m	17		150J	Y220AC
48▼	SZ16-62-20-1								
		20	62	10	1.0m			175J	u5d
49▼	SZ16-62-20-25								
		20	62	10	25m			175J	u5d
50	BZX98C62	5	62	12	10m	80	13	150J	S4af
51	BZY93C62	5	62	20	200m	9.0	60mV	175J	DO4Ø
52▼	SZ40-62-5-25								
		5.0	62	25	25m			175J	u5e
53	Z7B62	5†	62	25	200m	9.0	11	200J	S457Ø
54	ZX62	5	62	25	10	80	9.5	150J	S441
55▼	SZ40-62-10-25								
		10	62	25	25m			175J	u5e
56▼	SZ40-62-20-25								
		20	62	25	25m			175J	u5e
57	1N2833B	5	62	50	200m	7.0	9.0	175S	C5a
58	1N3335B	5	62	50	200m	7.0		175J	S4w
59	50T62,A,B	5†	62	50	200m	7.0	9.0		S19e
60	50Z62,A,B	5†	62	50	200m	7.0	9.0	175	C5a
61	MZT3335B	5.0	62	50	200m	7.0		150J	Y220AC
62	1N2833A	10	62	50	200m	7.0	9.0	175S	C5a
63	1N3335A	10	62	50	200m	7.0		175J	S4w
64	MZT3335A	10	62	50	200m	7.0		150J	Y220AC
65	1N2833	20	62	50	200m	7.0	9.0	175S	C5a
66	1N3335	20	62	50	200m	7.0		175J	S4w
67	MZT3335	20	62	50	200m	7.0		150J	Y220AC
68	Z6A62	1†	62	75	500m	2.2	11	200J	DO5Ø
69	BZY91C62	5	62	75	500m	2.2	9.0	175J	DO5Ø
70	Z6B62	5†	62	75	500m	2.2	11	200J	DO5Ø
71	C6C62Ø	10†	62	75	500m	2.2	11	200J	DO5
72	ZC762	5	62	100	25	45	9.1	175J	S125dØ
73	BZT03C62		62	600	10m	25			A333c
74	50KZ51A		62.7	50	5.0m				DO5§
75	50KZ51		63	50	5.0m				DO5§
76	50KZ54A		63.2	50	5.0m				DO5§
77	50KZ54		66.7	50	5.0m				DO5§
78	10KZ75	10†	67.5	10	20m		.10		DO4§
79	50KZ58A		67.8	50	5.0m				DO5§
80	CTZC68CØ	1	68	5.0	20m	44 †	9.0	175A	A1ey
81	TZC68C	1	68	5.0	20m	44 †	9.0	175A	A1ey
82	CTZC68EØ	3	68	5.0	20m	44 †	9.0	175A	A1ey
83	TZC68E	3	68	5.0	20m	44 †	9.0	175A	A1ey
84	1N4038B	5	68	5.0	18m	75	9.7	180A	S82
85	1N4978	5	68	5.0	20m	44		175A	A146m
86	1N5373B	5	68	5.0	20m	44		200A	A1ee
87	BZV40C68	5	68	5.0	20m	44			A1ee
88	BZV48C68	5	68	5.0	20m	44	9.0	175J	DO27
89	BZV58C68	5	68	5.0	20m	44	9.0	175J	A1ee
90	CTZC68,A,B,DØ								
		5†	68	5.0	20m	44 †	9.0	175A	A1ey
91	DSZ4768	5	68	5.0	20m	50		175	A60ae
92	TZC68,A,B,D								
		5†	68	5.0	20m	44 †	9.0	175A	A1ey
93	UZ4768	5	68	5.0	20m	50		175A	A380a
94	ZC68	5†	68	5.0	20m	44		150A	A1ey
95	ZC68B	5	68	5.0	20m	44			A1ey
96	1N4038A	10	68	5.0	18m	75	9.7	180A	S82
97	1N5373A	10	68	5.0	20m	44		200A	A1ee
98	DSZ4868	10	68	5.0	20m	50		175	A60ae
99	MZ5868	10	68.0	5.	20m	500	10.	175J	A60as
100	UZ4868	10	68	5.0	20m	50		175A	A380a
101	ZC68A	10	68	5.0	20m	44			A1ey
102	D817B	15	68	5.0	5.0m	400 †	18	100C	S494
103	1N4038	20	68	5.0	18m	75	9.7	180A	S82
104	1N5373	20	68	5.0	20m			200A	A1ee
105	6ALZ68A	5	68	6.0	20m			170J	A416
106	6ALZ68	10	68	6.0	20m			170J	A416
107▼	BZW03/D68	10	68	6.0	20m	44	13	175J	A333e
108	6ALZ68B	20	68	6.0	20m			170J	A416
109	Z3A68	1†	68	10	50m	10	11	200J	S457Ø
110	1N1371A	5	68	10	50m	14	100m	155A	DO4Ø
111	1N1422	5	68	10	20m	15			S154
112	1N1833A	5	68	10	50m	14	10	150A	S19a
113	1N1902A	5	68	10	3.0m	250	8.0	200A	S82
114	1N3001B	5	68	10	37m	18		175C	DO4Ø
115	1N4225B	5	68	10	37m	18		200S	DO10
116	1N4282B	5	68	10	37m	18	9.0	175C	S134
117	1S5068,A	5†	68	10	50m	15	10	150C	DO4
118	1S6068A	5	68	10	20m	50	8.0	150	DO4
119	MZT3001B	5.0	68	10	37m	18		150J	Y220AC
120▼	SZ16-68-5-1								
		5.0	68	10	1.0m			175J	u5d
121▼	SZ16-68-5-25								
		5.0	68	10	25m			175J	u5d
122	Z3B68	5†	68	10	50m	10	11	200J	S457Ø
123	1N1371	10	68	10	50m	14	100m	155A	DO4Ø
124	1N1833	10	68	10	50m	14	10	150A	S19a
125	1N1833CØ	10	68	10	50m	14	10	150A	S19a
126	1N1902	10	68	10	3.0m	250	8.0	200A	S82
127	1N3001A	10	68	10	37m	18		175C	DO4Ø
128	1N4225A	10	68	10	37m	18		200S	DO10
129	1N4282A	10	68	10	37m	18	9.0	175C	S134
130	1S293	10	68	10	40m	14	9.1	150J	S19g
131	1S5068CØ	10	68	10	50m	15	10	150C	DO4
132	1S6068	10	68	10	20m	50	8.0	150	DO4
133	C3C68Ø	10†	68	10	50m	10	11	200J	S457
134	MZT3001A	10	68	10	37m	18		150J	Y220AC
135▼	SZ16-68-10-1								
		10	68	10	1.0m			175J	u5d
136▼	SZ16-68-10-25								
		10	68	10	25m			175J	u5d
137	1N1371B	20	68	10	50m	14			S11e
138	1N3001	20	68	10	37m	18		175C	DO4Ø
139	1N4225	20	68	10	37m	18		200S	DO10
140	1N4282	20	68	10	37m	18	9.0	175C	S134
141	MZT3001	20	68	10	37m	18		150J	Y220AC
142▼	SZ16-68-20-1								
		20	68	10	1.0m			175J	u5d
143▼	SZ16-68-20-25								
		20	68	10	25m			175J	u5d
144	BZX98C68	5	68	12	10m	80	13	150J	S4af
145	BZY93C68	5	68	20	200m	10	65mV	175J	DO4Ø
146▼	SZ40-68-5-25								
		5.0	68	25	25m			175J	u5e
147	Z7B68	5†	68	25	200m	10	11	200J	S457Ø
148	ZX68	5	68	25	10	80	9.5	150J	S441
149▼	SZ40-68-10-25								
		10	68	25	25m			175J	u5e
150▼	SZ40-68-20-25								
		20	68	25	25m			175J	u5e
151	1N2834B	5	68	50	180m	8.0	9.0	175S	C5a
152	1N3336B	5	68	50	180m	8.0		175J	S4w
153	50T68,A,B	5†	68	50	180m	8.0	9.0		S19e
154	50Z68,A,B	5†	68	50	180m	8.0	9.0	175	C5a
155	MZT3336B	5.0	68	50	180m	8.0		150J	Y220AC
156	1N2834A	10	68	50	180m	8.0	9.0	175S	C5a
157	1N3336A	10	68	50	180m	8.0		175J	S4w
158	MZT3336A	10	68	50	180m	8.0		150J	Y220AC
159	1N2834	20	68	50	180m	8.0	9.0	175S	C5a
160	1N3336	20	68	50	180m	8.0		175J	S4w
161	MZT3336	20	68	50	180m	8.0		150J	Y220AC
162	Z6A68	1†	68	75	500m	2.4	11	200J	DO5Ø
163	BZY91C68	5	68	75	500m	2.4	9.0	175J	DO5Ø
164	Z6B68	5†	68	75	500m	2.4	11	200J	DO5Ø
165	C6C68Ø	10†	68	75	500m	2.4	11	200J	DO5
166	ZC768	5	68	100	25	65	9.2	175J	S125dØ
167	BZT03C68		68	600	10m	25			A333c
168	1N5123	5	70	5.0	20m	45		175A	A146m
169	DSZ5770	5	70	5.0	20m	50	10	175A	A60r
170	MZ5770	5	70	5.0	20m	45	9.5	175A	A60f
171	UZ5770	5	70	5.0	20m	50	10	175A	A380a
172	DSZ5870	10	70	5.0	20m	50	10	175A	A60r
173	MZ5870	10	70	5.0	20m	45	9.5	175A	A60f
174	UZ5870	10	70	5.0	20m	50	10	175A	A380a
175	MZ5970	20	70	5.0	20m	45	9.5	175A	A60f
176	UZ5970	20	70	5.0	20m	50	10	175A	A380a
177	UZ7770L	5	70	5.5	35m	40	9.5	175	A380c
178	UZ7870L	10	70	5.5	35m	40	9.5	175	A380a
179	UZ7970L	20	70	5.5	35m	40	9.5	175	A380c
180	UZ7770	5	70	10	35m	40	9.5	175	S277
181	UZ7870	10	70	10	35m	40	9.5	175	S277
182	UZ7970	20	70	10	35m	40	9.5	175	S277
183	50KZ60A		70.2	50	5.0m				DO5§
184	50KZ58		71.6	50	5.0m				DO5§
185	10KZ82	10†	73.8	10	15m		.10		DO4§
186	50KZ60		74.1	50	5.0m				DO5§
187	50KZ64A		74.9	50	5.0m				DO5§

$V_Z \geq 75$ V

LINE No.	TYPE NUMBER	TOL. ± (%)	NOM. REF. VOLT. (V)	PD @ 25°C MAX (W)	TEST CUR. Izt (A)	MAX. DYN. IMP. (Ω)	TEMP. COEFF Tc MAX	MAX. TEMP (°C)	DWG. NO.
191	CTZC75CØ	1	75	5.0	20m	45 †	9.0	175A	A1ey
192	TZC75C	1	75	5.0	20m	45 †	9.0	175A	A1ey
193	CTZC75EØ	3	75	5.0	20m	45 †	9.0	175A	A1ey
194	TZC75E	3	75	5.0	20m	45 †	9.0	175A	A1ey
195	1N4039B	5	75	5.0	17m	100	9.8	180A	S82
196	1N4979	5	75	5.0	20m	45		175A	A146m
197	1N5374B	5	75	5.0	20m	45		200A	A1ee
198	BZV40C75	5	75	5.0	20m	45			A1ee

SYMBOLS AND CODES EXPLAINED IN INTERPRETER

10. VOLTAGE REGULATOR DIODES, POWER - $V_Z \geq 75$ V (Cont'd)

IN ORDER OF: (1) REF. VOLTAGE (2) MAX PD MAX (3) TOLERANCE & (4) TYPE NUMBER

LINE No.	4 TYPE NUMBER	3 TOL. ± (%)	1 NOM. REF. VOLT. (V)	2 PD @ 25°C MAX (W)	TEST CUR. Izt (A)	MAX. DYN. IMP. (Ω)	TEMP. COEFF Tc MAX	MAX. TEMP (°C)	DWG. NO.
1	BZV48C75	5	75	5.0	20m	45	9.0	175J	DO27
2	BZV58C75	5	75	5.0	20m	45	9.0	175J	A1ee
3	CTZC75,A,B,DØ								
		5†	75	5.0	20m	45 †	9.0	175A	A1ey
4	DSZ4775	5	75	5.0	20m	55		175	A60ae
5	DSZ5775	5	75	5.0	15m	55	10	175A	A60r
6	MZ5775	5	75	5.0	15m	50	9.5	175A	A60f
7	TZC75,A,B,D								
		5†	75	5.0	20m	45 †	9.0	175A	A1ey
8	UZ4775	5	75	5.0	20m	55		175A	A380a
9	UZ5775	5	75	5.0	15m	55	10	175A	A380a
10	ZC75	5†	75	5.0	20m	45		150A	A1ey
11	ZC75B	5	75	5.0	20m	45			A1ey
12	1N4039A	10	75	5.0	17m	100	9.8	180A	S82
13	1N5374A	10	75	5.0	20m	45		200A	A1ee
14	DSZ4875	10	75	5.0	20m	55		175	A60ae
15	DSZ5875	10	75	5.0	15m	55	10	175A	A60r
16	MZ5875	10	75	5.0	15m	50	9.5	175A	A60f
17	UZ4875	10	75	5.0	20m	55		175A	A380a
18	UZ5875	10	75	5.0	15m	55	10	175A	A380a
19	ZC75A	10	75	5.0	20m	45			A1ey
20	1N4039	20	75	5.0	17m	100	9.8	180A	S82
21	1N5374	20	75	5.0	20m			200A	A1ee
22	MZ5975	20	75	5.0	15m	50	9.5	175A	A60f
23	UZ5975	20	75	5.0	15m	55	10	175A	A380a
24	UZ7775L	5	75	5.5	30m	45	9.5	175	A380c
25	UZ7875L	10	75	5.5	30m	45	9.5	175	A380a
26	UZ7975L	20	75	5.5	30m	45	9.5	175	A380c
27	6ALZ75A	5	75	6.0	20m			170J	A416
28	6ALZ75	10	75	6.0	20m			170J	A416
29▼	BZW03/D75	10	75	6.0	20m	45	13	175J	A333e
30	6ALZ75B	20	75	6.0	20m			170J	A416
31	Z3A75	1†	75	10	50m	11	11	200J	S457Ø
32	1N1372A	5	75	10	50m	20	110m	155A	DO4Ø
33	1N1834A	5	75	10	50m	20	11	150A	S19a
34	1N3002B	5	75	10	33m	22		175C	DO4Ø
35	1N4226B	5	75	10	33m	22		200S	DO10
36	1N4283B	5	75	10	33m	22	9.0	175C	S134
37	1S5075,A	5†	75	10	50m	30	11	150C	DO4
38	1S6075A	5	75	10	20m	50	9.0	150	DO4
39	MZT3002B	5.0	75	10	33m	22		150J	Y220AC
40▼	SZ16-75-5-1								
		5.0	75	10	1.0m			175J	u5d
41▼	SZ16-75-5-25								
		5.0	75	10	25m			175J	u5d
42	UZ7775	5	75	10	30m	45	9.5	175	S277
43	Z3B75	5†	75	10	50m	11	11	200J	S457Ø
44	1N1372	10	75	10	50m	20	110m	155A	DO4Ø
45	1N1834	10	75	10	50m	20	11	150A	S19a
46	1N1834CØ	10	75	10	50m	20	11	150A	S19a
47	1N3002A	10	75	10	33m	22		175C	DO4Ø
48	1N4226A	10	75	10	33m	22		200S	DO10
49	1N4283A	10	75	10	33m	22	9.0	175C	S134
50	1S294	10	75	10	40m	16	9.1	150J	S19g
51	1S5075CØ	10	75	10	50m	30	11	150C	DO4
52	1S6075	10	75	10	20m	50	9.0	150	DO4
53	C3C75Ø	10†	75	10	50m	11	11	200J	S457
54	MZT3002A	10	75	10	33m	22		150J	Y220AC
55▼	SZ16-75-10-1								
		10	75	10	1.0m			175J	u5d
56▼	SZ16-75-10-25								
		10	75	10	25m			175J	u5d
57	UZ7875	10	75	10	30m	45	9.5	175	S277
58	1N1372B	20	75	10	50m	20			S11e
59	1N3002	20	75	10	33m	22		175C	DO4Ø
60	1N4226	20	75	10	33m	22		200S	DO10
61	1N4283	20	75	10	33m	22	9.0	175C	S134
62	MZT3002	20	75	10	33m	22		150J	Y220AC
63▼	SZ16-75-20-1								
		20	75	10	1.0m			175J	u5d
64▼	SZ16-75-20-25								
		20	75	10	25m			175J	u5d
65	UZ7975	20	75	10	30m	45	9.5	175	S277
66	BZX98C75	5	75	12	10m	100	13	150J	S4af
67	BZY93C75	5	75	20	200m	10	70mV	175J	DO4Ø
68▼	SZ40-75-5-25								
		5.0	75	25	25m			175J	u5e
69	Z7B75	5†	75	25	200m	11	11	200J	S457Ø
70	ZX75	5	75	25	10	100	9.5	150J	S441
71▼	SZ40-75-10-25								
		10	75	25	25m			175J	u5e
72▼	SZ40-75-20-25								
		20	75	25	25m			175J	u5e
73	1N2835B	5	75	50	170m	9.0	9.0	175S	C5a
74	1N3337B	5	75	50	170m	9.0		175J	S4w
75	50T75,A,B	5†	75	50	170m	9.0	9.0		S19e
76	50Z75,A,B	5†	75	50	170m	9.0	9.0	175	C5a
77	MZT3337B	5.0	75	50	170m	9.0		150J	Y220AC
78	1N2835A	10	75	50	170m	9.0	9.0	175S	C5a
79	1N3337A	10	75	50	170m	9.0		175J	S4w
80	MZT3337A	10	75	50	170m	9.0		150J	Y220AC
81	1N2835	20	75	50	170m	9.0	9.0	175S	C5a
82	1N3337	20	75	50	170m	9.0		175J	S4w
83	MZT3337	20	75	50	170m	9.0		150J	Y220AC
84	Z6A75	1†	75	75	500m	2.6	11	200J	DO5Ø
85	BZY91C75	5	75	75	500m	2.6	9.0	175J	DO5Ø
86	Z6B75	5†	75	75	500m	2.6	11	200J	DO5Ø
87	C6C75Ø	10†	75	75	500m	2.6	11	200J	DO5
88	ZC775	5	75	100	25	70	9.2	175J	S125dØ
89	BZT03C75		75	600	10m	30			A333c
90	50KZ64		79	50	5.0m				DO5§
91	1N5124	5	80	5.0	15m	60		175A	A146m
92	DSZ5780	5	80	5.0	15m	80	10	175A	A60r
93	MZ5780	5	80	5.0	15m	60	9.5	175A	A60f
94	UZ5780	5	80	5.0	15m	80	10	175A	A380a
95	DSZ5880	10	80	5.0	15m	80	10	175A	A60r
96	MZ5880	10	80	5.0	15m	60	9.5	175A	A60f
97	UZ5880	10	80	5.0	15m	80	10	175A	A380a
98	MZ5980	20	80	5.0	15m	60	9.5	175A	A60f
99	UZ5980	20	80	5.0	15m	80	10	175A	A380a
100	UZ7780L	5	80	5.5	30m	60	9.5	175	A380c
101	UZ7880L	10	80	5.5	30m	60	9.5	175	A380a
102	UZ7980L	20	80	5.5	30m	60	9.5	175	A380c
103	UZ7780	5	80	10	30m	60	9.5	175	S277
104	UZ7880	10	80	10	30m	60	9.5	175	S277
105	UZ7980	20	80	10	30m	60	9.5	175	S277
106	10KZ91	10†	81.9	10	15m		.10		DO4§
107	50KZ70A		81.9	50	5.0m				DO5§
108	CTZC82CØ	1	82	5.0	15m	65 †	9.0	175A	A1ey
109	TZC82C	1	82	5.0	15m	65 †	9.0	175A	A1ey
110	CTZC82EØ	3	82	5.0	15m	65 †	9.0	175A	A1ey
111	TZC82E	3	82	5.0	15m	65 †	9.0	175A	A1ey
112	1N4040B	5	82	5.0	15m	100	9.8	180A	S82
113	1N4980	5	82	5.0	15m	65		175A	A146m
114	1N5375B	5	82	5.0	15m	65		200A	A1ee
115	BZV40C82	5	82	5.0	15m	65			A1ee
116	BZV48C82	5	82	5.0	15m	65	9.0	175J	DO27
117	BZV58C82	5	82	5.0	15m	65	9.0	175J	A1ee
118	CTZC82,A,B,DØ								
		5†	82	5.0	15m	65 †	9.0	175A	A1ey
119	DSZ4782	5	82	5.0	15m	80		175	A60ae
120	TZC82,A,B,D								
		5†	82	5.0	15m	65 †	9.0	175A	A1ey
121	UZ4782	5	82	5.0	15m	80		175A	A380a
122	ZC82	5†	82	5.0	15m	65		150A	A1ey
123	ZC82B	5	82	5.0	15m	65			A1ey
124	1N4040A	10	82	5.0	15m	100	9.8	180A	S82
125	1N5375A	10	82	5.0	15m	65		200A	A1ee
126	DSZ4882	10	82	5.0	15m	80		175	A60ae
127	MZ5882	10	82.0	5.	15m	720	10.	175J	A60as
128	UZ4882	10	82	5.0	15m	80		175A	A380a
129	ZC82A	10	82	5.0	15m	65			A1ey
130	D817V	15	82	5.0	5.0m	600 †	18	100C	S494
131	1N4040	20	82	5.0	15m	100	9.8	180A	S82
132	1N5375	20	82	5.0	15m			200A	A1ee
133	6ALZ82A	5	82	6.0	15m			170J	A416
134	6ALZ82	10	82	6.0	15m			170J	A416
135▼	BZW03/D82	10	82	6.0	15m	65	13	175J	A333e
136	6ALZ82B	20	82	6.0	15m			170J	A416
137	Z3A82	1†	82	10	50m	15	11	200J	S457Ø
138	1N1373A	5	82	10	50m	22	110m	155A	DO4Ø
139	1N1835A	5	82	10	50m	22	11	150A	S19a
140	1N1903A	5	82	10	3.0m	325	8.6	200A	S82
141	1N3003B	5	82	10	30m	25		175C	DO4Ø
142	1N4227B	5	82	10	30m	25		200S	DO10
143	1N4284B	5	82	10	30m	25	9.0	175C	S134
144	1S5082,A	5†	82	10	50m	30	11	150C	DO4
145	1S6082A	5	82	10	20m	50	9.0	150	DO4
146	MZT3003B	5.0	82	10	30m	25		150J	Y220AC
147▼	SZ16-82-5-1								
		5.0	82	10	1.0m			175J	u5d
148▼	SZ16-82-5-25								
		5.0	82	10	25m			175J	u5d
149	Z3B82	5†	82	10	50m	15	11	200J	S457Ø
150	1N1373	10	82	10	50m	22	110m	155A	DO4Ø
151	1N1835	10	82	10	50m	22	11	150A	S19a
152	1N1835CØ	10	82	10	50m	22	11	150A	S19a
153	1N1903	10	82	10	3.0m	325	8.6	200A	S82
154	1N3003A	10	82	10	30m	25		175C	DO4Ø
155	1N4227A	10	82	10	30m	25		200S	DO10
156	1N4284A	10	82	10	30m	25	9.0	175C	S134
157	1S295	10	82	10	30m	20	9.1	150J	S19g
158	1S5082CØ	10	82	10	50m	30	11	150C	DO4
159	1S6082	10	82	10	20m	60	9.0	150	DO4
160	C3C82Ø	10†	82	10	50m	15	11	200J	S457
161	MZT3003A	10	82	10	30m	25		150J	Y220AC
162▼	SZ16-82-10-1								
		10	82	10	1.0m			175J	u5d
163▼	SZ16-82-10-25								
		10	82	10	25m			175J	u5d
164	1N1373B	20	82	10	50m	22			S11e
165	1N3003	20	82	10	30m	25		175C	DO4Ø
166	1N4227	20	82	10	30m	25		200S	DO10
167	MZT3003	20	82	10	30m	25		150J	Y220AC
168▼	SZ16-82-20-1								
		20	82	10	1.0m			175J	u5d
169▼	SZ16-82-20-25								
		20	82	10	25m			175J	u5d
170	BZX98C82	5	82	12	10m	100	13	150J	S4af
171▼	SZ40-82-5-25								
		5.0	82	25	25m			175J	u5e
172	Z7B82	5†	82	25	100m	15	11	200J	S457Ø
173	ZX82	5	82	25	10	100	9.5	150J	S441
174▼	SZ40-82-10-25								
		10	82	25	25m			175J	u5e
175▼	SZ40-82-20-25								
		20	82	25	25m			175J	u5e
176	1N2836B§	5	82	50	150m	11	9.0	175S	C5a
177	1N3338B	5	82	50	150m	11		175J	S4w
178	50T82,A,B	5†	82	50	150m	11	9.0		S19e
179	50Z82,A,B	5†	82	50	150m	11	9.0	175	C5a
180	MZT3338B	5.0	82	50	150m	11		150J	Y220AC
181	1N2836A§	10	82	50	150m	11	9.0	175S	C5a
182	1N3338A	10	82	50	150m	11		175J	S4w
183	MZT3338A	10	82	50	150m	11		150J	Y220AC
184	1N2836§	20	82	50	150m	11	9.0	175S	C5a
185	1N3338	20	82	50	150m	11		175J	S4w
186	MZT3338	20	82	50	150m	11		150J	Y220AC
187	Z6A82	1†	82	75	250m	6.0	11	200J	DO5Ø
188	Z6B82	5†	82	75	250m	6.0	11	200J	DO5Ø
189	C6C82Ø	10†	82	75	250m	6.0	11	200J	DO5
190	ZC782	5	82	100	12	400	9.2	175J	S125dØ
191	BZT03C82		82	600	10m	30			A333c
192	50KZ70		86.5	50	5.0m				DO5§
193	1N5376B	5	87	5.0	15m	75		200A	A1ee
194	BZV40C87	5	87	5.0	15m	75			A1ee
195	1N5376A	10	87	5.0	15m	75		200A	A1ee
196	1N5376	20	87	5.0	15m			200A	A1ee
197	6ALZ87A	5	87	6.0	15m			170J	A416
198	6ALZ87	10	87	6.0	15m			170J	A416

SYMBOLS AND CODES EXPLAINED IN INTERPRETER

10. VOLTAGE REGULATOR DIODES, POWER - $V_Z \geq 75$ V (Cont'd)

IN ORDER OF: (1) REF. VOLTAGE (2) MAX PD MAX (3) TOLERANCE & (4) TYPE NUMBER

LINE No.	4 TYPE NUMBER	3 TOL. ± (%)	1 NOM. REF. VOLT. (V)	2 PD @ 25°C MAX (W)	TEST CUR. Izt (A)	MAX. DYN. IMP. (Ω)	TEMP. COEFF Tc MAX	MAX. TEMP (°C)	DWG. NO.
1	6ALZ87B	20	87	6.0	15m			170J	A416
2	50KZ75A		87.7	50	5.0m				DO5§
3	1N5125	5	90	5.0	15m	75		175A	A146m
4	DSZ5790	5	90	5.0	15m	90	10	175A	A60r
5	MZ5790	5	90	5.0	15m	75	9.5	175A	A60f
6	UZ5790	5	90	5.0	15m	90	10	175A	A380a
7	DSZ5890	10	90	5.0	15m	90	10	175A	A60r
8	MZ5890	10	90	5.0	15m	75	9.5	175A	A60f
9	UZ5890	10	90	5.0	15m	90	10	175A	A380a
10	MZ5990	20	90	5.0	15m	75	9.5	175A	A60f
11	UZ5990	20	90	5.0	15m	90	10	175A	A380a
12	UZ7790L	5	90	5.5	25m	75	9.5	175	A380c
13	UZ7890L	10	90	5.5	25m	75	9.5	175	A380a
14	UZ7990L	20	90	5.5	25m	75	9.5	175	A380c
15	UZ7790	5	90	10	25m	75	9.5	175	S277
16	10KZ100	10†	90	10	12m		.10		DO4§
17	UZ7890	10	90	10	25m	75	9.5	175	S277
18	UZ7990	20	90	10	25m	75	9.5	175	S277
19	CTZC91CØ	1	91	5.0	15m	75 †	9.0	175A	A1ey
20	TZC91C	1	91	5.0	15m	75 †	9.0	175A	A1ey
21	CTZC91EØ	3	91	5.0	15m	75 †	9.0	175A	A1ey
22	TZC91E	3	91	5.0	15m	75 †	9.0	175A	A1ey
23	1N4041B	5	91	5.0	14m	125	9.9	180A	S82
24	1N4981	5	91	5.0	15m	75		175A	A146m
25	1N5377B	5	91	5.0	15m	75		200A	A1ee
26	BZV40C91	5	91	5.0	15m	75			A1ee
27	BZV48C91	5	91	5.0	15m	75	9.0	175J	DO27
28	BZV58C91	5	91	5.0	15m	75	9.0	175J	A1ee
29	CTZC91,A,B,DØ	5†	91	5.0	15m	75 †	9.0	175A	A1ey
30	DSZ4791	5	91	5.0	15m	90		175	A60ae
31	TZC91,A,B,D	5†	91	5.0	15m	75 †	9.0	175A	A1ey
32	UZ4791	5	91	5.0	15m	90		175A	A380a
33	ZC91	5†	91	5.0	15m	75		150A	A1ey
34	ZC91B	5	91	5.0	15m	75			A1ey
35	1N4041A	10	91	5.0	14m	125	9.9	180A	S82
36	1N5377A	10	91	5.0	15m	75		200A	A1ee
37	DSZ4891	10	91	5.0	15m	90		175	A60ae
38	MZ5891	10	91.0	5.	15m	760	10.	175J	A60as
39	UZ4891	10	91	5.0	15m	90		175A	A380a
40	ZC91A	10	91	5.0	15m	75			A1ey
41	1N4041	20	91	5.0	14m	125	9.9	180A	S82
42	1N5377	20	91	5.0	15m			200A	A1ee
43	6ALZ91A	5	91	6.0	15m			170J	A416
44	6ALZ91	10	91	6.0	15m			170J	A416
45▼	BZW03/D91	10	91	6.0	15m	75	13	175J	A333e
46	6ALZ91B	20	91	6.0	15m			170J	A416
47	Z3A91	1†	91	10	50m	20	11	200J	S457Ø
48	1N1374A	5	91	10	50m	35	120m	155A	DO4Ø
49	1N1836A	5	91	10	50m	35	11	150A	S19a
50	1N3004B	5	91	10	28m	35		175C	DO4Ø
51	1N4228B	5	91	10	28m	35		200S	DO10
52	1N4285B	5	91	10	28m	35	9.0	175C	S134
53	1S5091,A	5†	91	10	50m	40	12	150C	DO4
54	1S6091A	5	91	10	20m	60	10	150	DO4
55	MZT3004B	5.0	91	10	28m	35		150J	Y220AC
56▼	SZ16-91-5-1	5.0	91	10	1.0m			175J	u5d
57▼	SZ16-91-5-25	5.0	91	10	25m			175J	u5d
58	Z3B91	5†	91	10	50m	20	11	200J	S457Ø
59	1N1374	10	91	10	50m	35	120m	155A	DO4Ø
60	1N1836	10	91	10	50m	35	11	150A	S19a
61	1N1836CØ	10	91	10	50m	35	11	150A	S19
62	1N3004A	10	91	10	28m	35		175C	DO4Ø
63	1N4228A	10	91	10	28m	35		200S	DO10
64	1N4285A	10	91	10	28m	35	9.0	175C	S134
65	1S296	10	91	10	30m	20	9.3	150J	S19g
66	1S5091CØ	10	91	10	50m	40	12	150C	DO4
67	1S6091	10	91	10	20m	60	10	150	DO4
68	C3C91Ø	10†	91	10	50m	20	11	200J	S457
69	MZT3004A	10	91	10	28m	35		150J	Y220AC
70▼	SZ16-91-10-1	10	91	10	1.0m			175J	u5d
71▼	SZ16-91-10-25	10	91	10	25m			175J	u5d
72	1N1374B	20	91	10	50m	35			S11e
73	1N3004	20	91	10	28m	35		175C	DO4Ø
74	1N4228	20	91	10	28m	35		200S	DO10
75	1N4285	20	91	10	28m	35	9.0	175C	S134
76	MZT3004	20	91	10	28m	35		150J	Y220AC
77▼	SZ16-91-20-1	20	91	10	1.0m			175J	u5d
78▼	SZ16-91-20-25	20	91	10	25m			175J	u5d
79	BZX98C91	5	91	12	5.0m	200	13	150J	S4af
80▼	SZ40-91-5-25	5.0	91	25	25m			175J	u5e
81	Z7B91	5†	91	25	100m	20	11	200J	S457Ø
82	ZX91	5	91	25	5.0	200	9.5	150J	S441
83▼	SZ40-91-10-25	10	91	25	25m			175J	u5e
84▼	SZ40-91-20-25	20	91	25	25m			175J	u5e
85	1N2837B	5	91	50	140m	15	9.0	175S	C5a
86	1N3339B	5	91	50	140m	15		175J	S4w
87	50T91,A,B	5†	91	50	140m	15	9.0		S19e
88	50Z91,A,B	5†	91	50	140m	15	9.0	175	C5a
89	MZT3339B	5.0	91	50	140m	15		150J	Y220AC
90	1N2837A	10	91	50	140m	15	9.0	175S	C5a
91	1N3339A	10	91	50	140m	15		175J	S4w
92	MZT3339A	10	91	50	140m	15		150J	Y220AC
93	1N2837	20	91	50	140m	15	9.0	175S	C5a
94	1N3339	20	91	50	140m	15		175J	S4w
95	MZT3339	20	91	50	140m	15		150J	Y220AC
96	Z6A91	1†	91	75	250m	8.0	11	200J	DO5Ø
97	Z6B91	5†	91	75	250m	8.0	11	200J	DO5Ø
98	C6C91Ø	10†	91	75	250m	8.0	11	200J	DO5
99	ZC791	5	91	100	12	600	9.3	175J	S125dØ
100	BZT03C91		91	600	5.0m	60			A333c
101	50KZ78A		91.3	50	5.0m				DO5§
102	50KZ75		92.7	50	5.0m				DO5§
103	50KZ78		96.4	50	5.0m				DO5§
104	10KZ110	10†	99	10	12m		.10		DO4§
105	50KZ85A		99.2	50	5.0m				DO5§N

$V_Z \geq 100$ V

LINE No.	4 TYPE NUMBER	3 TOL. ± (%)	1 NOM. REF. VOLT. (V)	2 PD @ 25°C MAX (W)	TEST CUR. Izt (A)	MAX. DYN. IMP. (Ω)	TEMP. COEFF Tc MAX	MAX. TEMP (°C)	DWG. NO.
109	CTZC100CØ	1	100	5.0	12m	90 †	9.0	175A	A1ey
110	TZC100C	1	100	5.0	12m	90 †	9.0	175A	A1ey
111	CTZC100EØ	3	100	5.0	12m	90 †	9.0	175A	A1ey
112	TZC100E	3	100	5.0	12m	90 †	9.0	175A	A1ey
113	1N4042B	5	100	5.0	13m	150	10	180A	S82
114	1N4982	5	100	5.0	12m	90		175A	A146m
115	1N5378B	5	100	5.0	12m	90		200A	A1ee
116	BZV40C100	5	100	5.0	12m	90			A1ee
117	BZV48C100	5	100	5.0	12m	90	9.0	175J	DO27
118	BZV58C100	5	100	5.0	12m	90	9.0	175J	A1ee
119	CTZC100,A,B,DØ	5†	100	5.0	12m	90 †	9.0	175A	A1ey
120	DSZ4110	5	100	5.0	12m	100		175	A60ae
121	DSZ5110	5	100	5.0	10m	100	10	175A	A60r
122	MZ5110	5	100	5.0	10m	90	10	175A	A60f
123	TZC100,A,B,D	5†	100	5.0	12m	90 †	9.0	175A	A1ey
124	UDZ5110Ø	5	100	5.0	10m	100		175A	A356b
125	UZ4110	5	100	5.0	12m	100		175A	A380a
126	UZ5110	5	100	5.0	10m	100	10	175A	A380a
127	ZC100	5†	100	5.0	12m	90		150A	A1ey
128	ZC100B	5	100	5.0	12m	90			A1ey
129	1N4042A	10	100	5.0	13m	150	10	180A	S82
130	1N5378A	10	100	5.0	12m	90		200A	A1ee
131	DSZ4210	10	100	5.0	12m	100		175	A60ae
132	DSZ5210	10	100	5.0	10m	100	10	175A	A60r
133	MZ5210	10	100	5.0	10m	90	10	175A	A60f
134	UDZ5210Ø	10	100	5.0	10m	100		175A	A356b
135	UZ4210	10	100	5.0	12m	100		175A	A380a
136	UZ5210	10	100	5.0	10m	100	10	175A	A380a
137	ZC100A	10	100	5.0	12m	90			A1ey
138	D817G	15	100	5.0	5.0m	800 †	18	100C	S494
139	1N4042	20	100	5.0	13m	150	10	180A	S82
140	1N5378	20	100	5.0	12m			200A	A1ee
141	MZ5310	20	100	5.0	10m	90	10	175A	A60f
142	UZ5310	20	100	5.0	10m	100	10	175A	A380a
143	UZ7110L	5	100	5.5	20m	90	10	175	A380c
144	UZ7210L	10	100	5.5	20m	90	10	175	A380c
145	UZ7310L	20	100	5.5	20m	90	10	175	A380c
146	6ALZ100A	5	100	6.0	12m			170J	A416
147	UDZ7110Ø	5	100	6.0	20m	90		175A	A356c
148	6ALZ100	10	100	6.0	12m			170J	A416
149▼	BZW03/D100	10	100	6.0	12m	90	13	175J	A333e
150	UDZ7210Ø	10	100	6.0	20m	90		175A	A356c
151	6ALZ100B	20	100	6.0	12m			170J	A416
152	Z3A100	1†	100	10	50m	20	11	200J	S457Ø
153	1N1375A	5	100	10	50m	40	120m	155A	DO4Ø
154	1N1423	5	100	10	20m	30 †	9.0	175C	S154
155	1N1904A	5	100	10	3.0m	400	9.3	200A	S82
156	1N2008A	5	100	10	50m	40	12	150A	S19aØ
157	1N3005B	5	100	10	25m	40		175C	DO4Ø
158	1N4229B	5	100	10	25m	40		200S	DO10
159	1N4286B	5	100	10	25m	40	9.0	175C	S134
160	1S5100,A	5†	100	10	50m	40	12	150C	DO4
161	1S6100A	5	100	10	20m	60	10	150	DO4
162	MZT3005B	5.0	100	10	25m	40		150J	Y220AC
163▼	SZ16-100-5-1	5.0	100	10	1.0m			175J	u5d
164▼	SZ16-100-5-25	5.0	100	10	25m			175J	u5d
165	UZ7110	5	100	10	20m	90	1.0	175	S277
166	Z3B100	5†	100	10	50m	20	11	200J	S457Ø
167	1N1375	10	100	10	50m	40	120m	155A	DO4Ø
168	1N1904	10	100	10	3.0m	400	9.3	200A	S82
169	1N2008	10	100	10	50m	40		150A	S19aØ
170	1N2008CØ	10	100	10	50m	40	12	150A	S19a
171	1N3005A	10	100	10	25m	40		175C	DO4Ø
172	1N4229A	10	100	10	25m	40		200S	DO10
173	1N4286A	10	100	10	25m	40	9.0	175C	S134
174	1S297	10	100	10	30m	30	9.0	150J	S19g
175	1S5100CØ	10	100	10	50m	40	12	150C	DO4
176	1S6100	10	100	10	20m	60	10	150	DO4
177	C3C100Ø	10†	100	10	50m	20	11	200J	S457
178	MZT3005A	10	100	10	25m	40		150J	Y220AC
179▼	SZ16-100-10-1	10	100	10	1.0m			175J	u5d
180▼	SZ16-100-10-25	10	100	10	25m			175J	u5d
181	UZ7210	10	100	10	20m	90	10	175	S277
182	1N3005	20	100	10	25m	40		175C	DO4Ø
183	1N4229	20	100	10	25m	40		200S	DO10
184	1N4286	20	100	10	25m	40	9.0	175C	S134
185	MZT3005	20	100	10	25m	40		150J	Y220AC
186▼	SZ16-100-20-1	20	100	10	1.0m			175J	u5d
187▼	SZ16-100-20-25	20	100	10	25m			175J	u5d
188	UZ7310	20	100	10	20m	90	10	175	S277
189	BZX98C100	5	100	12	5.0m	200	13	150J	S4af
190▼	SZ40-100-5-25	5.0	100	25	25m			175J	u5e
191	Z7B100	5†	100	25	100m	20	11	200J	S457Ø
192	ZX100	5	100	25	5.0	200	9.5	150J	S441
193▼	SZ40-100-10-25	10	100	25	25m			175J	u5e
194▼	SZ40-100-20-25	20	100	25	25m			175J	u5e
195	1N2838B	5	100	50	120m	20	9.0	175S	C5a
196	1N3340B	5	100	50	120m	20		175J	S4w
197	50T100,A,B	5†	100	50	120m	20	9.0		S19e
198	50Z100,A,B	5†	100	50	120m	20	9.0	175	C5a

10. VOLTAGE REGULATOR DIODES, POWER - $V_Z \geq 100$ V (Cont'd)

IN ORDER OF: (1) REF. VOLTAGE (2) MAX PD MAX (3) TOLERANCE & (4) TYPE NUMBER

LINE No.	4 TYPE NUMBER	3 TOL. ± (%)	1 NOM. REF. VOLT. (V)	2 PD @ 25°C MAX (W)	TEST CUR. Izt (A)	MAX. DYN. IMP. (Ω)	TEMP. COEFF Tc MAX	MAX. TEMP (°C)	DWG. NO.
1	MZT3340B	5.0	100	50	120m	20		150J	Y220AC
2	1N2838A	10	100	50	120m	20	9.0	175S	C5a
3	1N3340A	10	100	50	120m	20		175J	S4w
4	MZT3340A	10	100	50	120m	20		150J	Y220AC
5	1N2838	20	100	50	120m	20	9.0	175S	C5a
6	1N3340	20	100	50	120m	20		175J	S4w
7	MZT3340	20	100	50	120m	20		150J	Y220AC
8	Z6A100	1†	100	75	250m	10	11	200J	DO5Ø
9	Z6B100	5†	100	75	250m	10	11	200J	DO5Ø
10	C6C100Ø	10†	100	75	250m	10	11	200J	DO5
11	ZC799	5	100	100	12	900	9.4	175J	S125dØ
12	ZGP10-100	20	100	500	5.0m	500		175	DO41
13	BZT03C100		100	600	5.0m	60			A333c
14	50KZ85		104	50	5.0m				DO5§
15	CTZC105CØ	1	105	5.0	12m	100 †	9.5	175A	A1ey
16	TZC105C	1	105	5.0	12m	100 †	9.5	175A	A1ey
17	CTZC105EØ	3	105	5.0	12m	100 †	9.5	175A	A1ey
18	TZC105E	3	105	5.0	12m	100 †	9.5	175A	A1ey
19	CTZC105,A,B,DØ	5†	105	5.0	12m	100 †	9.5	175A	A1ey
20	TZC105,A,B,D	5†	105	5.0	12m	100 †	9.5	175A	A1ey
21	ZC105	5†	105	5.0	12m	100		150A	A1ey
22	ZC105B	5	105	5.0	12m	100			A1ey
23	ZC105A	10	105	5.0	12m	100			A1ey
24	1N3006B	5	105	10	25m	45	9.5	175S	DO4
25	1N4230B	5	105	10	25m	45		200S	DO10
26	MZT3006B	5.0	105	10	25m	45		150J	Y220AC
27	1N3006A	10	105	10	25m	45	9.5	175S	DO4
28	1N4230A	10	105	10	25m	45		200S	DO10
29	1S298	10	105	10	30m	30	9.0	150J	S19g
30	MZT3006A	10	105	10	25m	45		150J	Y220AC
31	1N3006	20	105	10	25m	45	9.5	175S	DO4
32	1N4230	20	105	10	25m	45		200S	DO10
33	MZT3006	20	105	10	25m	45		150J	Y220AC
34	50KZ90A		105	50	5.0m				DO5§
35	1N2839B	5	105	50	120m	25	9.5	175S	C5a
36	1N3341B	5	105	50	120m	25		175J	S4w
37	50Z105,A,B	5†	105	50	120m	25	9.5	175	C5a
38	MZT3341B	5.0	105	50	120m	25		150J	Y220AC
39	1N2839A	10	105	50	120m	25	9.5	175S	C5a
40	1N3341A	10	105	50	120m	25		175J	S4w
41	MZT3341A	10	105	50	120m	25		150J	Y220AC
42	1N2839	20	105	50	120m	25	9.5	175S	C5a
43	1N3341	20	105	50	120m	25		175J	S4w
44	MZT3341	20	105	50	120m	25		150J	Y220AC
45	10KZ120	10†	108	10	10m		.10		DO4§
46	CTZC110CØ	1	110	5.0	12m	125 †	9.5	175A	A1ey
47	TZC110C	1	110	5.0	12m	125 †	9.5	175A	A1ey
48	CTZC110EØ	3	110	5.0	12m	125 †	9.5	175A	A1ey
49	TZC110E	3	110	5.0	12m	125 †	9.5	175A	A1ey
50	1N4983	5	110	5.0	12m	125		175A	A146m
51	1N5379B	5	110	5.0	12m	125		200A	A1ee
52	BZV40C110	5	110	5.0	12m	125			A1ee
53	BZV48C110	5	110	5.0	12m	125	9.5	175J	DO27
54	BZV58C110	5	110	5.0	12m	125	9.5	175J	A1ee
55	CTZC110,A,B,DØ	5†	110	5.0	12m	125 †	9.5	175A	A1ey
56	MZ5111	5	110	5.0	10m	125	10	175A	A60f
57	TZC110,A,B,D	5†	110	5.0	12m	125 †	9.5	175A	A1ey
58	UZ4111	5	110	5.0	12m	125		175A	A380a
59	UZ5111	5	110	5.0	10m	125	10	175A	A380a
60	ZC110	5†	110	5.0	12m	125		150A	A1ey
61	1N5379A	10	110	5.0	12m	125		200A	A1ee
62	MZ5211	10	110	5.0	10m	125	10	175A	A60f
63	UZ4211	10	110	5.0	12m	125		175A	A380a
64	UZ5211	10	110	5.0	10m	125	10	175A	A380a
65	ZC110A	10	110	5.0	12m	125			A1ey
66	ZC110B	10	110	5.0	12m	125			A1ey
67	1N5379	20	110	5.0	12m			200A	A1ee
68	MZ5311	20	110	5.0	10m	125	10	175A	A60f
69	UZ5311	20	110	5.0	10m	125	10	175A	A380a
70	6ALZ110A	5	110	6.0	12m			170J	A416
71	6ALZ110	10	110	6.0	12m			170J	A416
72▼	BZW03/D110	10	110	6.0	12m	125	13	175J	A333e
73	6ALZ110B	20	110	6.0	12m			170J	A416
74	Z3A110	1†	110	10	50m	25	11	200J	S457Ø
75	1N1809A	5	110	10	50m	47		175A	S11Ø
76	1N2009A	5	110	10	50m	47	12	150A	S19aØ
77	1N3007B	5	110	10	23m	55		175C	DO4Ø
78	1N4231B	5	110	10	23m	55		200S	DO10
79	1N4287B	5	110	10	23m	55	9.5	175C	S134
80	1S5110,A	5†	110	10	50m	40	12	150C	DO4
81	1S6110A	5	110	10	20m	60	10	150	DO4
82	MZT3007B	5.0	110	10	23m	55		150J	Y220AC
83▼	SZ16-110-5-1	5.0	110	10	1.0m			175J	u5d
84▼	SZ16-110-5-25	5.0	110	10	25m			175J	u5d
85	Z3B110	5†	110	10	50m	25	11	200J	S457Ø
86	1N1809	10	110	10	50m	47		175A	S11Ø
87	1N2009	10	110	10	50m	47		150A	S19aØ
88	1N2009CØ	10	110	10	50m	47	12	150A	S19a
89	1N3007A	10	110	10	23m	55		175C	DO4Ø
90	1N4231A	10	110	10	23m	55		200S	DO10
91	1N4287A	10	110	10	23m	55	9.5	175C	S134
92	1S299	10	110	10	30m	40	9.1	150J	S19g
93	1S5110CØ	10	110	10	50m	40	12	150C	DO4
94	1S6110	10	110	10	20m	80	10	150	DO4
95	C3C110Ø	10†	110	10	50m	25	11	200J	S457
96	MZT3007A	10	110	10	23m	55		150J	Y220AC
97▼	SZ16-110-10-1	10	110	10	1.0m			175J	u5d
98▼	SZ16-110-10-25	10	110	10	25m			175J	u5d
99	1N1809B	20	110	10	50m	47			S11e
100	1N3007	20	110	10	23m	55		175C	DO4Ø
101	1N4231	20	110	10	23m	55		200S	DO10
102	1N4287	20	110	10	23m	55	9.5	175C	S134
103	MZT3007	20	110	10	23m	55		150J	Y220AC
104▼	SZ16-110-20-1	20	110	10	1.0m			175J	u5d
105▼	SZ16-110-20-25	20	110	10	25m			175J	u5d
106	BZX98C110	5	110	12	5.0m	250	13	150J	S4af
107▼	SZ40-110-5-25	5.0	110	25	25m			175J	u5e
108	Z7B110	5†	110	25	100m	25	11	200J	S457Ø
109	ZX110	5	110	25	5.0	250	10	150J	S441
110▼	SZ40-110-10-25	10	110	25	25m			175J	u5e
111▼	SZ40-110-20-25	20	110	25	25m			175J	u5e
112	1N2840B	5	110	50	110m	30	9.5	175S	C5a
113	1N3342B	5	110	50	110m	30		175J	S4w
114	50T110,A,B	5†	110	50	110m	30	9.5		S19e
115	50Z110,A,B	5†	110	50	110m	30	9.5	175	C5a
116	MZT3342B	5.0	110	50	110m	30		150J	Y220AC
117	1N2840A	10	110	50	110m	30	9.5	175S	C5a
118	1N3342A	10	110	50	110m	30		175J	S4w
119	MZT3342A	10	110	50	110m	30		150J	Y220AC
120	1N2840	20	110	50	110m	30	9.5	175S	C5a
121	1N3342	20	110	50	110m	30		175J	S4w
122	MZT3342	20	110	50	110m	30		150J	Y220AC
123	Z6A110	1†	110	75	250m	12	11	200J	DO5Ø
124	Z6B110	5†	110	75	250m	12	11	200J	DO5Ø
125	C6C110Ø	10†	110	75	250m	12	11	200J	DO5
126	BZV16C110	5.0	110	80	4.5m	4.0k	9.5	175J	DO13
127	ZGP10-110	20	110	500	5.0m	600		175	DO41
128	BZT03C110		110	600	5.0m	80			A333c
129	50KZ90		111	50	5.0m				DO5§
130	10KZ130	10†	117	10	10m		.10		DO4§
131	50KZ100A		117	50	5.0m				DO5§
132	CTZC120CØ	1	120	5.0	10	170 †	9.5	175A	A1ey
133	TZC120C	1	120	5.0	10	170 †	9.5	175A	A1ey
134	CTZC120EØ	3	120	5.0	10	170 †	9.5	175A	A1ey
135	TZC120E	3	120	5.0	10	170 †	9.5	175A	A1ey
136	1N4984	5	120	5.0	10m	170		175A	A146m
137	1N5380B	5	120	5.0	10m	170		200A	A1ee
138	BZV40C120	5	120	5.0	10m	170			A1ee
139	BZV48C120	5	120	5.0	10m	170	9.5	175J	DO27
140	BZV58C120	5	120	5.0	10m	170	9.5	175J	A1ee
141	CTZC120,A,B,DØ	5†	120	5.0	10	170 †	9.5	175A	A1ey
142	MZ5112	5	120	5.0	10m	170	10	175A	A60f
143	TZC120,A,B,D	5†	120	5.0	10	170 †	9.5	175A	A1ey
144	UZ4112	5	120	5.0	10m	170		175A	A380a
145	UZ5112	5	120	5.0	10m	170	10	175A	A380a
146	ZC120	5†	120	5.0	10m	170		150A	A1ey
147	ZC120B	5	120	5.0	10m	170			A1ey
148	1N5380A	10	120	5.0	10m	170		200A	A1ee
149	MZ5212	10	120	5.0	10m	170	10	175A	A60f
150	UZ4212	10	120	5.0	10m	170		175A	A380a
151	UZ5212	10	120	5.0	10m	170	10	175A	A380a
152	ZC120A	10	120	5.0	10m	170			A1ey
153	KS620A	15	120	5.0	50m	150 †	20	100C	S494
154	1N5380	20	120	5.0	10m			200A	A1ee
155	MZ5312	20	120	5.0	10m	170	10	175A	A60f
156	UZ5312	20	120	5.0	10m	170	10	175A	A380a
157	6ALZ120A	5	120	6.0	10m			170J	A416
158	6ALZ120	10	120	6.0	10m			170J	A416
159▼	BZW03/D120	10	120	6.0	10m	170	13	175J	A333e
160	6ALZ120B	20	120	6.0	10m			170J	A416
161	Z3A120	1†	120	10	50m	25	11	200J	S457Ø
162	1N1810A	5	120	10	50m	56		175A	S11Ø
163	1N2010A	5	120	10	50m	56	12	150A	S19aØ
164	1N3008B	5	120	10	20m	75		175C	DO4Ø
165	1N4232B	5	120	10	20m	75		200S	DO10
166	1N4288B	5	120	10	20m	75	9.5	175C	S134
167	1S5120,A	5†	120	10	50m	50	12	150C	DO4
168	1S6120A	5	120	10	20m	80	10	150	DO4
169	MZT3008B	5.0	120	10	20m	75		150J	Y220AC
170▼	SZ16-120-5-1	5.0	120	10	1.0m			175J	u5d
171▼	SZ16-120-5-25	5.0	120	10	25m			175J	u5d
172	Z3B120	5†	120	10	50m	25	11	200J	S457Ø
173	1N1810	10	120	10	50m	56		175A	S11Ø
174	1N2010	10	120	10	50m	56		150A	S19aØ
175	1N2010CØ	10	120	10	50m	56	12	150A	S19a
176	1N3008A	10	120	10	20m	75		175C	DO4Ø
177	1N4232A	10	120	10	20m	75		200S	DO10
178	1N4288A	10	120	10	20m	75	9.5	175C	S134
179	1S300	10	120	10	30m	50	9.2	150J	S19g
180	1S5120CØ	10	120	10	50m	50	12	150C	DO4
181	1S6120	10	120	10	20m	80	10	150	DO4
182	C3C120Ø	10†	120	10	50m	25	11	200J	S457
183	MZT3008A	10	120	10	20m	75		150J	Y220AC
184▼	SZ16-120-10-1	10	120	10	1.0m			175J	u5d
185▼	SZ16-120-10-25	10	120	10	25m			175J	u5d
186	1N1810B	20	120	10	50m	56			S11e
187	1N3008	20	120	10	20m	75		175C	DO4Ø
188	1N4232	20	120	10	20m	75		200S	DO10
189	1N4288	20	120	10	20m	75	9.5	175C	S134
190	MZT3008	20	120	10	20m	75		150J	Y220AC
191▼	SZ16-120-20-1	20	120	10	1.0m			175J	u5d
192▼	SZ16-120-20-25	20	120	10	25m			175J	u5d
193	BZX98C120	5	120	12	5.0m	250	13	150J	S4af
194▼	SZ40-120-5-25	5.0	120	25	25m			175J	u5e
195	Z7B120	5†	120	25	100m	25	11	200J	S457Ø
196	ZX120	5	120	25	5.0	250	10	150J	S441
197▼	SZ40-120-10-25	10	120	25	25m			175J	u5e

SYMBOLS AND CODES EXPLAINED IN INTERPRETER

10. VOLTAGE REGULATOR DIODES, POWER - $V_Z \geq 100$ V (Cont'd)

IN ORDER OF: (1) REF. VOLTAGE (2) MAX PD MAX (3) TOLERANCE & (4) TYPE NUMBER

LINE No.	4 TYPE NUMBER	3 TOL. ± (%)	1 NOM. REF. VOLT. (V)	2 PD @ 25°C MAX (W)	TEST CUR. Izt (A)	MAX. DYN. IMP. (Ω)	TEMP. COEFF Tc MAX	MAX. TEMP (°C)	DWG. NO.
1▼	SZ40-120-20-25								
		20	120	25	25m			175J	u5e
2	1N2841B	5	120	50	100m	40	9.5	175S	C5a
3	1N3343B	5	120	50	100m	40		175J	S4w
4	50T120,A,B	5†	120	50	100m	40	9.5		S19e
5	50Z120,A,B	5†	120	50	100m	40	9.5	175	C5a
6	MZT3343B	5.0	120	50	100m	40		150J	Y220AC
7	1N2841A	10	120	50	100m	40	9.5	175S	C5a
8	1N3343A	10	120	50	100m	40		175J	S4w
9	MZT3343A	10	120	50	100m	40		150J	Y220AC
10	1N2841	20	120	50	100m	40	9.5	175S	C5a
11	1N3343	20	120	50	100m	40		175J	S4w
12	MZT3343	20	120	50	100m	40		150J	Y220AC
13	Z6A120	1†	120	75	250m	15	11	200J	DO5Ø
14	Z6B120	5†	120	75	250m	15	11	200J	DO5Ø
15	C6C120Ø	10†	120	75	250m	15	11	200J	DO5
16	BZV16C120	5.0	120	80	4.0m	4.5k	9.5	175J	DO13
17	ZGP10-120	20	120	500	5.0m	700		175	DO41
18	BZT03C120		120	600	5.0m	80			A333c
19	50KZ100		123	50	5.0m				DO5§
20	50KZ110A		128	50	5.0m				DO5§
21	CTZC130CØ	1	130	5.0	10m	190 †	9.5	175A	A1ey
22	TZC130C	1	130	5.0	10m	190 †	9.5	175A	A1ey
23	CTZC130EØ	3	130	5.0	10m	190 †	9.5	175A	A1ey
24	TZC130E	3	130	5.0	10m	190 †	9.5	175A	A1ey
25	1N4985	5	130	5.0	10m	190		175A	A146m
26	1N5381B	5	130	5.0	10m	190		200A	A1ee
27	BZV40C130	5	130	5.0	10m	190			A1ee
28	BZV48C130	5	130	5.0	10m	190	9.5	175J	DO27
29	BZV58C130	5	130	5.0	10m	190	9.5	175J	A1ee
30	CTZC130,A,B,DØ								
		5†	130	5.0	10	190 †	9.5	175A	A1ey
31	MZ5113	5	130	5.0	10m	190	10	175A	A60f
32	TZC130,A,B,D								
		5†	130	5.0	10	190 †	9.5	175A	A1ey
33	UZ4113	5	130	5.0	10m	190		175A	A380a
34	UZ5113	5	130	5.0	10m	190	10	175A	A380a
35	ZC130	5†	130	5.0	10m	190		150A	A1ey
36	ZC130B	5	130	5.0	10m	190			A1ey
37	1N5381A	10	130	5.0	10m	190		200A	A1ee
38	MZ5213	10	130	5.0	10m	190	10	175A	A60f
39	UZ4213	10	130	5.0	10m	190		175A	A380a
40	UZ5213	10	130	5.0	10m	190	10	175A	A380a
41	ZC130A	10	130	5.0	10m	190			A1ey
42	KS630A	15	130	5.0	50m	180 †	20	100C	S494
43	1N5381	20	130	5.0	10m			200A	A1ee
44	MZ5313	20	130	5.0	10m	190	10	175A	A60f
45	UZ5313	20	130	5.0	10m	190	10	175A	A380a
46	6ALZ130A	5	130	6.0	10m			170J	A416
47	6ALZ130	10	130	6.0	10m			170J	A416
48▼	BZW03/D130	10	130	6.0	10m	190	13	175J	A333e
49	6ALZ130B	20	130	6.0	10m			170J	A416
50	Z3A130	1†	130	10	50m	30	11	200J	S457Ø
51	1N1811A	5	130	10	50m	65		175A	S11Ø
52	1N2011A	5	130	10	50m	65	12	150A	S19aØ
53	1N3009B	5	130	10	19m	100		175C	DO4Ø
54	1N4233B	5	130	10	19m	100		200S	DO10
55	1N4289B	5	130	10	19m	100	9.5	175C	S134
56	1S5130,A	5†	130	10	50m	50	12	150C	DO4
57	1S6130A	5	130	10	20m	80	10	150	DO4
58	MZT3009B	5.0	130	10	19m	100		150J	Y220AC
59▼	SZ16-130-5-1								
		5.0	130	10	1.0m			175J	u5d
60▼	SZ16-130-5-25								
		5.0	130	10	25m			175J	u5d
61	Z3B130	5†	130	10	50m	30	11	200J	S457Ø
62	1N1811	10	130	10	50m	65		175A	S11Ø
63	1N2011	10	130	10	50m	65		150A	S19aØ
64	1N2011CØ	10	130	10	50m	65	12	150A	S19a
65	1N3009A	10	130	10	19m	100		175C	DO4Ø
66	1N4233A	10	130	10	19m	100		200S	DO10
67	1N4289A	10	130	10	19m	100	9.5	175C	S134
68	1S301	10	130	10	30m	60	9.2	150J	S19g
69	1S5130CØ	10	130	10	50m	50	12	150C	DO4
70	1S6130	10	130	10	20m	120	10	150	DO4
71	C3C130Ø	10†	130	10	50m	30	11	200J	S457
72	MZT3009A	10	130	10	19m	100		150J	Y220AC
73▼	SZ16-130-10-1								
		10	130	10	1.0m			175J	u5d
74▼	SZ16-130-10-25								
		10	130	10	25m			175J	u5d
75	1N1811B	20	130	10	50m	65			S11e
76	1N3009	20	130	10	19m	100		175C	DO4Ø
77	1N4233	20	130	10	19m	100		200S	DO10
78	1N4289	20	130	10	19m	100	9.5	175C	S134
79	MZT3009	20	130	10	19m	100		150J	Y220AC
80▼	SZ16-130-20-1								
		20	130	10	1.0m			175J	u5d
81▼	SZ16-130-20-25								
		20	130	10	25m			175J	u5d
82	BZX98C130	5	130	12	5.0m	300	13	150J	S4af
83▼	SZ40-130-5-25								
		5.0	130	25	25m			175J	u5e
84	Z7B130	5†	130	25	100m	30	11	200J	S457Ø
85	ZX130	5	130	25	5.0	300	10	150J	S441
86▼	SZ40-130-10-25								
		10	130	25	25m			175J	u5e
87▼	SZ40-130-20-25								
		20	130	25	25m			175J	u5e
88	1N2842B	5	130	50	95m	50	9.5	175S	C5a
89	1N3344B	5	130	50	95m	50		175J	S4w
90	50T130,A,B	5†	130	50	95m	50	9.5		S19e
91	50Z130,A,B	5†	130	50	95m	50	9.5	175	C5a
92	MZT3344B	5.0	130	50	95m	50		150J	Y220AC
93	1N2842A	10	130	50	95m	50	9.5	175S	C5a
94	1N3344A	10	130	50	95m	50		175J	S4w
95	MZT3344A	10	130	50	95m	50		150J	Y220AC
96	1N2842	20	130	50	95m	50	9.5	175S	C5a
97	1N3344	20	130	50	95m	50		175J	S4w
98	MZT3344	20	130	50	95m	50		150J	Y220AC
99	Z6A130	1†	130	75	250m	20	11	200J	DO5Ø
100	Z6B130	5†	130	75	250m	20	11	200J	DO5Ø
101	C6C130Ø	10†	130	75	250m	20	11	200J	DO5
102	BZV16C130	5.0	130	80	3.8m	5.0k	9.5	175J	DO13
103	ZGP10-130	20	130	500	5.0m	800		175	DO41
104	BZT03C130		130	600	5.0m	110			A333c
105	10KZ150	10†	135	10	8.0m		.10		DO4§
106	50KZ110		135	50	5.0m				DO5§
107	CTZC140CØ	1	140	5.0	8.0m	230 †	9.5	175A	A1ey
108	TZC140C	1	140	5.0	8.0m	230 †	9.5	175A	A1ey
109	CTZC140EØ	3	140	5.0	8.0m	230 †	9.5	175A	A1ey
110	TZC140E	3	140	5.0	8.0m	230 †	9.5	175A	A1ey
111	1N5126	5	140	5.0	8.0m	230		175A	A146m
112	1N5382B	5	140	5.0	8.0m	230		200A	A1ee
113	BZV40C140	5	140	5.0	8.0m	230			A1ee
114	CTZC140,A,B,DØ								
		5†	140	5.0	8.0m	230 †	9.5	175A	A1ey
115	MZ5114	5	140	5.0	8.0m	230	10		A60f
116	TZC140,A,B,D								
		5†	140	5.0	8.0m	230 †	9.5	175A	A1ey
117	UZ5114	5	140	5.0	8.0m	230	10	175A	A380a
118	ZC140	5†	140	5.0	8.0m	230		150A	A1ey
119	ZC140B	5	140	5.0	8.0m	230			A1ey
120	1N5382A	10	140	5.0	8.0m	230		200A	A1ee
121	MZ5214	10	140	5.0	8.0m	230	10		A60f
122	UZ5214	10	140	5.0	8.0m	230	10	175A	A380a
123	ZC140A	10	140	5.0	8.0m	230			A1ey
124	1N5382	20	140	5.0	8.0m			200A	A1ee
125	MZ5314	20	140	5.0	8.0m	230	10		A60f
126	UZ5314	20	140	5.0	8.0m	230	10	175A	A380a
127	6ALZ140A	5	140	6.0	8.0m			170J	A416
128	6ALZ140	10	140	6.0	8.0m			170J	A416
129	6ALZ140B	20	140	6.0	8.0m			170J	A416
130	1N3010B	5	140	10	18m	125	9.5	175S	DO4
131	1N4234B	5	140	10	18m	125		200S	DO10
132	MZT3010B	5.0	140	10	18m	125		150J	Y220AC
133▼	SZ16-140-5-1								
		5.0	140	10	1.0m			175J	u5d
134▼	SZ16-140-5-25								
		5.0	140	10	25m			175J	u5d
135	1N3010A	10	140	10	18m	125	9.5	175S	DO4
136	1N4234A	10	140	10	18m	125		200S	DO10
137	1S302	10	140	10	30m	70	9.3	150J	S19g
138	MZT3010A	10	140	10	18m	125		150J	Y220AC
139▼	SZ16-140-10-1								
		10	140	10	1.0m			175J	u5d
140▼	SZ16-140-10-25								
		10	140	10	25m			175J	u5d
141	1N3010	20	140	10	18m	125	9.5	175S	DO4
142	1N4234	20	140	10	18m	125		200S	DO10
143	MZT3010	20	140	10	18m	125		150J	Y220AC
144▼	SZ16-140-20-1								
		20	140	10	1.0m			175J	u5d
145▼	SZ16-140-20-25								
		20	140	10	25m			175J	u5d
146▼	SZ40-140-5-25								
		5.0	140	25	25m			175J	u5e
147▼	SZ40-140-10-25								
		10	140	25	25m			175J	u5e
148▼	SZ40-140-20-25								
		20	140	25	25m			175J	u5e
149	1N3345B	5	140	50	90m	60		175J	S4w
150	50Z140,A,B	5†	140	50	90m	60	9.5	175	C5a
151	MZT3345B	5.0	140	50	90m	60		150J	Y220AC
152	1N3345A	10	140	50	90m	60		175J	S4w
153	MZT3345A	10	140	50	90m	60		150J	Y220AC
154	1N3345	20	140	50	90m	60		175J	S4w
155	MZT3345	20	140	50	90m	60		150J	Y220AC
156	ZGP10-140	20	140	500	5.0m	900		175	DO41
157	10KZ160	10†	144	10	8.0m		.10		DO4§
158	CTZC150CØ	1	150	5.0	8.0m	330 †	9.5	175A	A1ey
159	TZC150C	1	150	5.0	8.0m	330 †	9.5	175A	A1ey
160	CTZC150EØ	3	150	5.0	8.0m	330 †	9.5	175A	A1ey
161	TZC150E	3	150	5.0	8.0m	330 †	9.5	175A	A1ey
162	1N4986	5	150	5.0	8.0m	330		175A	A146m
163	1N5383B	5	150	5.0	8.0m	330		200A	A1ee
164	BZV40C150	5	150	5.0	8.0m	330			A1ee
165	BZV48C150	5	150	5.0	8.0m	330	9.5	175J	DO27
166	BZV58C150	5	150	5.0	8.0m	330	9.5	175J	A1ee
167	CTZC150,A,B,DØ								
		5†	150	5.0	8.0m	330 †	9.5	175A	A1ey
168	MZ5115	5	150	5.0	8.0m	330	10		A60f
169	TZC150,A,B,D								
		5†	150	5.0	8.0m	330 †	9.5	175A	A1ey
170	UZ4115	5	150	5.0	8.0m	330		175A	A380a
171	UZ5115	5	150	5.0	8.0m	330	10	175A	A380a
172	ZC150	5†	150	5.0	8.0m	330		150A	A1ey
173	ZC150B	5	150	5.0	8.0m	330			A1ey
174	1N5383A	10	150	5.0	8.0m	330		200A	A1ee
175	MZ5215	10	150	5.0	8.0m	330	10		A60f
176	UZ4215	10	150	5.0	8.0	330		175A	A380a
177	UZ5215	10	150	5.0	8.0m	330	10	175A	A380a
178	ZC150A	10	150	5.0	8.0m	330			A1ey
179	KS650A	15	150	5.0	25m	255 †	20	100C	S494
180	1N5383	20	150	5.0	8.0m			200A	A1ee
181	MZ5315	20	150	5.0	8.0m	330	10		A60f
182	UZ5315	20	150	5.0	8.0m	330	10	175A	A380a
183	6ALZ150A	5	150	6.0	8.0m			170J	A416
184	6ALZ150	10	150	6.0	8.0m			170J	A416
185▼	BZW03/D150	10	150	6.0	8.0m	330	13	175J	A333e
186	6ALZ150B	20	150	6.0	8.0m			170J	A416
187	Z3A150	1†	150	10	50m	40	11	200J	S457Ø
188	1N1424	5	150	10	10m	105 †	10	175C	S154
189	1N1812A	5	150	10	50m	82		175A	S11Ø
190	1N2012A	5	150	10	50m	82	12	150A	S19aØ
191	1N3011B	5	150	10	17m	175		175C	DO4Ø
192	1N4235B	5	150	10	17m	175		200S	DO10
193	1N4290B	5	150	10	17m	175	9.5	175C	S134
194	1S5150,A	5†	150	10	50m	50	12	150C	DO4
195	1S6150A	5	150	10	10m	180	10	150	DO4

SYMBOLS AND CODES EXPLAINED IN INTERPRETER

10. VOLTAGE REGULATOR DIODES, POWER - $V_Z \geq 100$ V (Cont'd)

IN ORDER OF: (1) REF. VOLTAGE (2) MAX PD MAX (3) TOLERANCE & (4) TYPE NUMBER

LINE No.	4 TYPE NUMBER	3 TOL. ± (%)	1 NOM. REF. VOLT. (V)	2 PD @ 25°C MAX (W)	TEST CUR. Izt (A)	MAX. DYN. IMP. (Ω)	TEMP. COEFF Tc MAX	MAX. TEMP (°C)	DWG. NO.
1	MZT3011B	5.0	150	10	17m	175		150J	Y220AC
2▼	SZ16-150-5-1	5.0	150	10	1.0m			175J	u5d
3▼	SZ16-150-5-25	5.0	150	10	25m			175J	u5d
4	Z3B150	5†	150	10	50m	40	11	200J	S457Ø
5	1N1812	10	150	10	50m	82		175A	S11Ø
6	1N2012	10	150	10	50m	82		150A	S19aØ
7	1N2012CØ	10	150	10	50m	82	12	150A	S19a
8	1N3011A	10	150	10	17m	175		175C	DO4Ø
9	1N4235A	10	150	10	17m	175		200S	DO10
10	1N4290A	10	150	10	17m	175	9.5	175C	S134
11	1S303	10	150	10	30m	80	9.3	150J	S19g
12	1S5150CØ	10	150	10	50m	50	12	150C	DO4
13	1S6150	10	150	10	10m	200	10	150	DO4
14	C3C150Ø	10†	150	10	50m	40	11	200J	S457
15	MZT3011A	10	150	10	17m	175		150J	Y220AC
16▼	SZ16-150-10-1	10	150	10	1.0m			175J	u5d
17▼	SZ16-150-10-25	10	150	10	25m			175J	u5d
18	1N1812B	20	150	10	50m	82			S11e
19	1N3011	20	150	10	17m	175		175C	DO4Ø
20	1N4235	20	150	10	17m	175		200S	DO10
21	1N4290	20	150	10	17m	175	9.5	175C	S134
22	MZT3011	20	150	10	17m	175		150J	Y220AC
23▼	SZ16-150-20-1	20	150	10	1.0m			175J	u5d
24▼	SZ16-150-20-25	20	150	10	25m			175J	u5d
25	BZX98C150	5	150	12	5.0m	300	13	150J	S4af
26▼	SZ40-150-5-25	5.0	150	25	25m			175J	u5e
27	Z7B150	5†	150	25	100m	40	11	200J	S457Ø
28	ZX150	5	150	25	5.0	300	10	150J	S441
29▼	SZ40-150-10-25	10	150	25	25m			175J	u5e
30▼	SZ40-150-20-25	20	150	25	25m			175J	u5e
31	1N2843B	5	150	50	85m	75	9.5	175S	C5a
32	1N3346B	5	150	50	85m	75		175J	S4w
33	50T150,A,B	5†	150	50	85m	75	9.5		S19e
34	50Z150,A,B	5†	150	50	85m	75	9.5	175	C5a
35	MZT3346B	5.0	150	50	85m	75		150J	Y220AC
36	1N2843A	10	150	50	85m	75	9.5	175S	C5a
37	1N3346A	10	150	50	85m	75		175J	S4w
38	MZT3346A	10	150	50	85m	75		150J	Y220AC
39	1N2843	20	150	50	85m	75	9.5	175S	C5a
40	1N3346	20	150	50	85m	75		175J	S4w
41	MZT3346	20	150	50	85m	75		150J	Y220AC
42	Z6A150	1†	150	75	250m	25	11	200J	DO5Ø
43	Z6B150	5†	150	75	250m	25	11	200J	DO5Ø
44	C6C150Ø	10†	150	75	250m	25	11	200J	DO5
45	BZV16C150	5.0	150	80	3.4m	6.0k	9.5	175J	DO13
46	ZGP10-150	20	150	500	5.0m	1.0k		175	DO41
47	BZT03C150		150	600	5.0m	130			A333c
48	CTZC160CØ	1	160	5.0	8.0m	350 †	9.5	175A	A1ey
49	TZC160C	1	160	5.0	8.0m	350 †	9.5	175A	A1ey
50	CTZC160EØ	3	160	5.0	8.0m	350 †	9.5	175A	A1ey
51	TZC160E	3	160	5.0	8.0m	350 †	9.5	175A	A1ey
52	1N4987	5	160	5.0	8.0m	350		175A	A146m
53	1N5384B	5	160	5.0	8.0m	350		200A	A1ee
54	BZV40C160	5	160	5.0	8.0m	350			A1ee
55	BZV48C160	5	160	5.0	8.0m	350	9.5	175J	DO27
56	BZV58C160	5	160	5.0	8.0m	350	9.5	175J	A1ee
57	CTZC160,A,B,DØ	5†	160	5.0	8.0m	350 †	9.5	175A	A1ey
58	MZ5116	5	160	5.0	8.0m	350	10		A60f
59	TZC160,A,B,D	5†	160	5.0	8.0m	350 †	9.5	175A	A1ey
60	UZ4116	5	160	5.0	8.0m	350		175A	A380a
61	UZ5116	5	160	5.0	8.0m	350	10	175A	A380a
62	ZC160	5†	160	5.0	8.0m	350		150A	A1ey
63	ZC160B	5	160	5.0	8.0m	350			A1ey
64	1N5384A	10	160	5.0	8.0m	350		200A	A1ee
65	MZ5216	10	160	5.0	8.0m	350	10		A60f
66	UZ4216	10	160	5.0	8.0m	350		175A	A380a
67	UZ5216	10	160	5.0	8.0m	350	10	175A	A380a
68	ZC160A	10	160	5.0	8.0m	350			A1ey
69	1N5384	20	160	5.0	8.0m			200A	A1ee
70	MZ5316	20	160	5.0	8.0m	350	10		A60f
71	UZ5316	20	160	5.0	8.0m	350	10	175A	A380a
72	6ALZ160A	5	160	6.0	8.0m			170J	A416
73	6ALZ160	10	160	6.0	8.0m			170J	A416
74▼	BZW03/D160	10	160	6.0	8.0m	350	13	175J	A333e
75	6ALZ160B	20	160	6.0	8.0m			170J	A416
76	Z3A160	1†	160	10	50m	50	11	200J	S457Ø
77	1N1813A	5	160	10	50m	93		175A	S11Ø
78	1N3012B	5	160	10	16m	200		175C	DO4Ø
79	1N4236B	5	160	10	16m	200		200S	DO10
80	1N4291B	5	160	10	16m	200	9.5	175C	S134
81	1S6160A	5	160	10	10m	200	10	150	DO4
82	MZT3012B	5.0	160	10	16m	200		150J	Y220AC
83▼	SZ16-160-5-1	5.0	160	10	1.0m			175J	u5d
84▼	SZ16-160-5-25	5.0	160	10	25m			175J	u5d
85	Z3B160	5†	160	10	50m	50	11	200J	S457Ø
86	1N1813	10	160	10	50m	93		175A	S11Ø
87	1N3012A	10	160	10	16m	200		175C	DO4Ø
88	1N4236A	10	160	10	16m	200		200S	DO10
89	1N4291A	10	160	10	16m	200	9.5	175C	S134
90	1S6160	10	160	10	10m	250	10	150	DO4
91	C3C160Ø	10†	160	10	50m	50	11	200J	S457
92	MZT3012A	10	160	10	16m	200		150J	Y220AC
93▼	SZ16-160-10-1	10	160	10	1.0m			175J	u5d
94▼	SZ16-160-10-25	10	160	10	25m			175J	u5d
95	1N1813B	20	160	10	50m	93			S11e
96	1N3012	20	160	10	16m	200		175C	DO4Ø
97	1N4236	20	160	10	16m	200		200S	DO10
98	1N4291	20	160	10	16m	200	9.5	175C	S134
99	MZT3012	20	160	10	16m	200		150J	Y220AC
100▼	SZ16-160-20-1	20	160	10	1.0m			175J	u5d
101▼	SZ16-160-20-25	20	160	10	25m			175J	u5d
102	BZX98C160	5	160	12	5.0m	350	13	150J	S4af
103▼	SZ40-160-5-25	5.0	160	25	25m			175J	u5e
104	Z7B160	5†	160	25	100m	50	11	200J	S457Ø
105	ZX160	5	160	25	5.0	350	10	150J	S441
106▼	SZ40-160-10-25	10	160	25	25m			175J	u5e
107▼	SZ40-160-20-25	20	160	25	25m			175J	u5e
108	1N2844B	5	160	50	80m	80	9.5	175S	C5a
109	1N3347B	5	160	50	80m	80		175J	S4w
110	50T160,A,B	5†	160	50	80m	80	9.5		S19e
111	50Z160,A,B	5†	160	50	80m	80	9.5	175	C5a
112	MZT3347B	5.0	160	50	80m	80		150J	Y220AC
113	1N2844A	10	160	50	80m	80	9.5	175S	C5a
114	1N3347A	10	160	50	80m	80		175J	S4w
115	MZT3347A	10	160	50	80m	80		150J	Y220AC
116	1N2844	20	160	50	80m	80	9.5	175S	C5a
117	1N3347	20	160	50	80m	80		175J	S4w
118	MZT3347	20	160	50	80m	80		150J	Y220AC
119	Z6A160	1†	160	75	250m	35	11	200J	DO5Ø
120	Z6B160	5†	160	75	250m	35	11	200J	DO5Ø
121	C6C160Ø	10†	160	75	250m	35	11	200J	DO5
122	BZV16C160	5.0	160	80	3.2m	6.5k	9.5	175J	DO13
123	BZT03C160		160	600	5.0m	150			A333c
124	10KZ180	10†	162	10	5.0m		.11		DO4§
125	1N5127	5	170	5.0	8.0m	380		175A	A146m
126	1N5385B	5	170	5.0	8.0m	380		200A	A1ee
127	BZV40C170	5	170	5.0	8.0m	380			A1ee
128	MZ5117	5	170	5.0	8.0m	380	10		A60f
129	UZ5117	5	170	5.0	8.0m	380	10	175A	A380a
130	1N5385A	10	170	5.0	8.0m	380		200A	A1ee
131	MZ5217	10	170	5.0	8.0m	380	10		A60f
132	UZ5217	10	170	5.0	8.0m	380	10	175A	A380a
133	1N5385	20	170	5.0	8.0m			200A	A1ee
134	MZ5317	20	170	5.0	8.0m	380	10		A60f
135	UZ5317	20	170	5.0	8.0m	380	10	175A	A380a
136	6ALZ170A	5	170	6.0	8.0m			170J	A416
137	6ALZ170	10	170	6.0	8.0m			170J	A416
138	6ALZ170B	20	170	6.0	8.0m			170J	A416
139▼	SZ16-170-5-1	5.0	170	10	1.0m			175J	u5d
140▼	SZ16-170-5-25	5.0	170	10	25m			175J	u5d
141▼	SZ16-170-10-1	10	170	10	1.0m			175J	u5d
142▼	SZ16-170-10-25	10	170	10	25m			175J	u5d
143▼	SZ16-170-20-1	20	170	10	1.0m			175J	u5d
144▼	SZ16-170-20-25	20	170	10	25m			175J	u5d
145▼	SZ40-170-5-25	5.0	170	25	25m			175J	u5e
146▼	SZ40-170-10-25	10	170	25	25m			175J	u5e
147▼	SZ40-170-20-25	20	170	25	25m			175J	u5e
148	1N3013B	5	175	10	14m	250	9.5	175S	DO4
149	1N4237B	5	175	10	14m	250		200S	DO10
150	1N3013A	10	175	10	14m	250	9.5	175S	DO4
151	1N4237A	10	175	10	14m	250		200S	DO10
152	1N3013	20	175	10	14m	250	9.5	175S	DO4
153	1N4237	20	175	10	14m	250		200S	DO10
154	1N3348B	5	175	50	70m	85		175J	S4w
155	50Z175,A,B	5†	175	50	70m	85	9.5	175	C5a
156	MZT3348B	5.0	175	50	70m	85		150J	Y220AC
157	1N3348A	10	175	50	70m	85		175J	S4w
158	MZT3348A	10	175	50	70m	85		150J	Y220AC
159	1N3348	20	175	50	70m	85		175J	S4w
160	MZT3348	20	175	50	70m	85		150J	Y220AC
161	CTZC180CØ	1	180	5.0	5.0m	430 †	9.5	175A	A1ey
162	TZC180C	1	180	5.0	5.0m	430 †	9.5	175A	A1ey
163	CTZC180EØ	3	180	5.0	5.0m	430 †	9.5	175A	A1ey
164	TZC180E	3	180	5.0	5.0m	430 †	9.5	175A	A1ey
165	1N4988	5	180	5.0	5.0m	430		175A	A146m
166	1N5386B	5	180	5.0	5.0m	430		200A	A1ee
167	BZV40C180	5	180	5.0	5.0m	430			A1ee
168	BZV48C180	5	180	5.0	5.0m	430	9.5	175J	DO27
169	BZV58C180	5	180	5.0	5.0m	430	9.5	175J	A1ee
170	CTZC180,A,B,DØ	5†	180	5.0	5.0m	430 †	9.5	175A	A1ey
171	MZ5118	5	180	5.0	5.0m	430	10		A60f
172	TZC180,A,B,D	5†	180	5.0	5.0m	430 †	9.5	175A	A1ey
173	UZ4118	5	180	5.0	5.0m	450		175A	A380a
174	UZ5118	5	180	5.0	5.0m	450	11	175A	A380a
175	ZC180	5†	180	5.0	5.0m	430		150A	A1ey
176	ZC180B	5	180	5.0	5.0m	430			A1ey
177	1N5386A	10	180	5.0	5.0m	430		200A	A1ee
178	MZ5218	10	180	5.0	5.0m	430	10		A60f
179	UZ4218	10	180	5.0	5.0m	450		175A	A380a
180	UZ5218	10	180	5.0	5.0m	450	11	175A	A380a
181	ZC180A	10	180	5.0	5.0m	430			A1ey
182	KS680A	15	180	5.0	25m	330 †	20	100C	S494
183	1N5386	20	180	5.0	5.0m			200A	A1ee
184	MZ5318	20	180	5.0	5.0m	430	10		A60f
185	UZ5318	20	180	5.0	5.0m	450	11	175A	A380a
186	6ALZ180A	5	180	6.0	5.0m			170J	A416
187	6ALZ180	10	180	6.0	5.0m			170J	A416
188▼	BZW03/D180	10	180	6.0	5.0m	430	13	175J	A333e
189	6ALZ180B	20	180	6.0	5.0m			170J	A416

SYMBOLS AND CODES EXPLAINED IN INTERPRETER

10. VOLTAGE REGULATOR DIODES, POWER - $V_Z \geq 100$ V (Cont'd)

IN ORDER OF: (1) REF. VOLTAGE (2) MAX PD MAX (3) TOLERANCE & (4) TYPE NUMBER

LINE No.	4 TYPE NUMBER	3 TOL. ± (%)	1 NOM. REF. VOLT. (V)	2 PD @ 25°C MAX (W)	TEST CUR. Izt (A)	MAX. DYN. IMP. (Ω)	TEMP. COEFF Tc MAX	MAX. TEMP (°C)	DWG. NO.
1	Z3A180	1†	180	10	50m	60	11	200J	S457Ø
2	1N1814A	5	180	10	50m	115		175A	S11Ø
3	1N3014B	5	180	10	14m	260		175C	DO4Ø
4	1N4238B	5	180	10	14m	260		200S	DO10
5	1N4292B	5	180	10	14m	260	9.5	175C	S134
6	1S6180A	5	180	10	10m	250	10	150	DO4
7	MZT3014B	5.0	180	10	14m	260		150J	Y220AC
8▼	SZ16-180-5-1	5.0	180	10	1.0m			175J	u5d
9▼	SZ16-180-5-25	5.0	180	10	25m			175J	u5d
10	Z3B180	5†	180	10	50m	60	11	200J	S457Ø
11	1N1814	10	180	10	50m	115		175A	S11Ø
12	1N3014A	10	180	10	14m	260		175C	DO4Ø
13	1N4238A	10	180	10	14m	260		200S	DO10
14	1N4292A	10	180	10	14m	260	9.5	175C	S134
15	1S6180	10	180	10	10m	300	10	150	DO4
16	10KZ200	10†	180	10	5.0m		.11		DO4§
17	C3C180Ø	10†	180	10	50m	60	11	200J	S457
18	MZT3014A	10	180	10	14m	260		150J	Y220AC
19▼	SZ16-180-10-1	10	180	10	1.0m			175J	u5d
20▼	SZ16-180-10-25	10	180	10	25m			175J	u5d
21	1N1814B	20	180	10	50m	115			S11e
22	1N3014	20	180	10	14m	260		175C	DO4Ø
23	1N4238	20	180	10	14m	260		200S	DO10
24	1N4292	20	180	10	14m	260	9.5	175C	S134
25	MZT3014	20	180	10	14m	260		150J	Y220AC
26▼	SZ16-180-20-1	20	180	10	1.0m			175J	u5d
27▼	SZ16-180-20-25	20	180	10	25m			175J	u5d
28	BZX98C180	5	180	12	5.0m	350	13	150J	S4af
29▼	SZ40-180-5-25	5.0	180	25	25m			175J	u5e
30	Z7B180	5†	180	25	100m	60	11	200J	S457Ø
31	ZX200	5	180	25	5.0	350	10	150J	S441
32▼	SZ40-180-10-25	10	180	25	25m			175J	u5e
33▼	SZ40-180-20-25	20	180	25	25m			175J	u5e
34	1N2845B	5	180	50	68m	90	9.5	175S	C5a
35	1N3349B	5	180	50	68m	90		175J	S4w
36	50T180,A,B	5†	180	50	68m	90	9.5		S19e
37	50Z180,A,B	5†	180	50	68m	90	9.5	175	C5a
38	MZT3349B	5.0	180	50	68m	90		150J	Y220AC
39	1N2845A	10	180	50	68m	90	9.5	175S	C5a
40	1N3349A	10	180	50	68m	90		175J	S4w
41	MZT3349A	10	180	50	68m	90		150J	Y220AC
42	1N2845	20	180	50	68m	90	9.5	175S	C5a
43	1N3349	20	180	50	68m	90		175J	S4w
44	MZT3349	20	180	50	68m	90		150J	Y220AC
45	Z6A180	1†	180	75	250m	45	11	200J	DO5Ø
46	Z6B180	5†	180	75	250m	45	11	200J	DO5Ø
47	C6C180Ø	10†	180	75	250m	45	11	200J	DO5
48	BZV16C180	5.0	180	80	2.8m	7.0k	9.5	175J	DO13
49	BZT03C180		180	600	5.0m	180			A333c
50	1N5128	5	190	5.0	5.0m	450		175A	A146m
51	1N5387B	5	190	5.0	5.0m	450		200A	A1ee
52	BZV40C190	5	190	5.0	5.0m	450			A1ee
53	MZ5119	5	190	5.0	5.0m	450	10		A60f
54	UZ5119	5	190	5.0	5.0m	470	11	175A	A380a
55	1N5387A	10	190	5.0	5.0m	450		200A	A1ee
56	MZ5219	10	190	5.0	5.0m	450	10		A60f
57	UZ5219	10	190	5.0	5.0m	470	11	175A	A380a
58	1N5387	20	190	5.0	5.0m			200A	A1ee
59	MZ5319	20	190	5.0	5.0m	450	10		A60f
60	UZ5319	20	190	5.0	5.0m	470	11	175A	A380a
61	6ALZ190A	5	190	6.0	5.0m			170J	A416
62	6ALZ190	10	190	6.0	5.0m			170J	A416
63	6ALZ190B	20	190	6.0	5.0m			170J	A416
64▼	SZ16-190-5-1	5.0	190	10	1.0m			175J	u5d
65▼	SZ16-190-10-1	10	190	10	1.0m			175J	u5d
66▼	SZ16-190-20-1	20	190	10	1.0m			175J	u5d

$V_Z \geq 200$ V

LINE No.	4 TYPE NUMBER	3 TOL. ± (%)	1 NOM. REF. VOLT. (V)	2 PD @ 25°C MAX (W)	TEST CUR. Izt (A)	MAX. DYN. IMP. (Ω)	TEMP. COEFF Tc MAX	MAX. TEMP (°C)	DWG. NO.
70	CTZC200CØ	1	200	5.0	5.0m	480 †	10	175A	A1ey
71	TZC200C	1	200	5.0	5.0m	480 †	10	175A	A1ey
72	CTZC200EØ	3	200	5.0	5.0m	480 †	10	175A	A1ey
73	TZC200E	3	200	5.0	5.0m	480 †	10	175A	A1ey
74	1N4989	5	200	5.0	5.0m	480		175A	A146m
75	1N5388B	5	200	5.0	5.0m	480		200A	A1ee
76	BZV40C200	5	200	5.0	5.0m	480			A1ee
77	BZV48C200	5	200	5.0	5.0m	480	10	175J	DO27
78	BZV58C200	5	200	5.0	5.0m	480	10	175J	A1ee
79	CTZC200,A,B,DØ	5†	200	5.0	5.0m	480 †	10	175A	A1ey
80	MZ5120	5	200	5.0	5.0m	480	10		A60f
81	TZC200,A,B,D	5†	200	5.0	5.0m	480 †	10	175A	A1ey
82	UZ5120	5	200	5.0	5.0m	500	11	175A	A380a
83	ZC200#B	5†	200	5.0	5.0m	480		150A	A1ey
84	ZC200B	5	200	5.0	5.0m	480			A1ey
85	1N5388A	10	200	5.0	5.0m	480		200A	A1ee
86	MZ5220	10	200	5.0	5.0m	480	10		A60f
87	UZ4120	10	200	5.0	5.0m	500		175A	A380a
88	UZ4220	10	200	5.0	5.0m	500		175A	A380a
89	UZ5220	10	200	5.0	5.0m	500	11	175A	A380a
90	ZC200A	10	200	5.0	5.0m	480			A1ey
91	1N5388	20	200	5.0	5.0m			200A	A1ee
92	MZ5320	20	200	5.0	5.0m	480	10		A60f
93	UZ5320	20	200	5.0	5.0m	500	11	175A	A380a
94	6ALZ200A	5	200	6.0	5.0m			170J	A416
95	6ALZ200	10	200	6.0	5.0m			170J	A416
96▼	BZW03/D200	10	200	6.0	5.0m	500	13	175J	A333e
97	6ALZ200B	20	200	6.0	5.0m			170J	A416
98	Z3A200	1†	200	10	50m	70	11	200J	S457Ø
99	1N1815A	5	200	10	50m	140		175A	S11Ø
100	1N3015B	5	200	10	12m	300		175C	DO4Ø
101	1N4239B	5	200	10	12m	300		200S	DO10
102	1N4293B	5	200	10	12m	300	10	175C	S134
103	1S6200A	5	200	10	10m	300	10	150	DO4
104	MZT3015B	5.0	200	10	12m	300		150J	Y220AC
105▼	SZ16-200-5-1	5.0	200	10	1.0m			175J	u5d
106▼	SZ16-200-5-25	5.0	200	10	25m			175J	u5d
107	Z3B200	5†	200	10	50m	70	11	200J	S457Ø
108	1N1815	10	200	10	50m	140		175A	S11Ø
109	1N3015A	10	200	10	12m	300		175C	DO4Ø
110	1N4239A	10	200	10	12m	300		200S	DO10
111	1N4293A	10	200	10	12m	300	10	175C	S134
112	1S6200	10	200	10	10m	400	10	150	DO4
113	C3C200Ø	10†	200	10	50m	70	11	200J	S457
114	MZT3015A	10	200	10	12m	300		150J	Y220AC
115▼	SZ16-200-10-1	10	200	10	1.0m			175J	u5d
116▼	SZ16-200-10-25	10	200	10	25m			175J	u5d
117	1N1815B	20	200	10	50m	140			S11e
118	1N3015	20	200	10	12m	300		175C	DO4Ø
119	1N4239	20	200	10	12m	300		200S	DO10
120	1N4293	20	200	10	12m	300	10	175C	S134
121	MZT3015	20	200	10	12m	300		150J	Y220AC
122▼	SZ16-200-20-1	20	200	10	1.0m			175J	u5d
123▼	SZ16-200-20-25	20	200	10	25m			175J	u5d
124	BZX98C200	5	200	12	5.0m	350	13	150J	S4af
125▼	SZ40-200-5-25	5.0	200	25	25m			175J	u5e
126	Z7B200	5†	200	25	100m	70	11	200J	S457Ø
127▼	SZ40-200-10-25	10	200	25	25m			175J	u5e
128▼	SZ40-200-20-25	20	200	25	25m			175J	u5e
129	1N2846B	5	200	50	65m	100	10	175S	C5a
130	1N3350B	5	200	50	65m	100		175J	S4w
131	50T200,A,B	5†	200	50	65m	100	9.5		S19e
132	50Z200,A,B	5†	200	50	65m	100	10	175	C5a
133	MZT3350B	5.0	200	50	65m	100		150J	Y220AC
134	1N2846A	10	200	50	65m	100	10	175S	C5a
135	1N3350A	10	200	50	65m	100		175J	S4w
136	MZT3350A	10	200	50	65m	100		150J	Y220AC
137	1N2846	20	200	50	65m	100	10	175S	C5a
138	1N3350	20	200	50	65m	100		175J	S4w
139	MZT3350	20	200	50	65m	100		150J	Y220AC
140	Z6A200	1†	200	75	250m	55	11	200J	DO5Ø
141	Z6B200	5†	200	75	250m	55	11	200J	DO5Ø
142	C6C200Ø	10†	200	75	250m	55	11	200J	DO5
143	BZV16C200	5.0	200	80	2.4m	8.0k	10	175J	DO13
144	BZT03C200		200	600	5.0m	200			A333c
145	1N4990	5	220	5.0	5.0m	550		175A	A146m
146	MZ5122	5	220	5.0	5.0m	550	10		A60f
147	UDZ5122Ø	5	220	5.0	5.0m	550		175A	A356b
148	UZ5122	5	220	5.0	5.0m	550	11	175A	A380a
149	MZ5222	10	220	5.0	5.0m	550	10		A60f
150	UDZ5222Ø	10	220	5.0	5.0m	550		175A	A356b
151	UZ5222	10	220	5.0	5.0m	550	11	175A	A380a
152	MZ5322	20	220	5.0	5.0m	550	10		A60f
153	UZ5322	20	220	5.0	5.0m	550	11	175A	A380a
154▼	BZW03/D220	10	220	6.0	5.0m	700	13	175J	A333e
155	BZT03C220		220	600	2.0m	350			A333c
156	1N4991	5	240	5.0	5.0m	650		175A	A146m
157	MZ5124	5	240	5.0	5.0m	650	11		A60f
158	UZ5124	5	240	5.0	5.0m	650	11	175A	A380a
159	MZ5224	10	240	5.0	5.0m	650	11		A60f
160	UZ5224	10	240	5.0	5.0m	650	11	175A	A380a
161	MZ5324	20	240	5.0	5.0m	650	11		A60f
162	UZ5324	20	240	5.0	5.0m	650	11	175A	A380a
163▼	BZW03/D240	10	240	6.0	5.0m	900	13	175J	A333e
164	BZT03C240		240	600	2.0m	400			A333c
165	1N5129	5	260	5.0	5.0m	650		175A	A146m
166	MZ5126	5	260	5.0	5.0m	750	11		A60f
167	UZ5126	5	260	5.0	5.0m	750	12	175A	A380a
168	MZ5226	10	260	5.0	5.0m	750	11		A60f
169	UZ5226	10	260	5.0	5.0m	750	12	175A	A380a
170	MZ5326	20	260	5.0	5.0m	750	11		A60f
171	UZ5326	20	260	5.0	5.0m	750	12	175A	A380a
172	1N4992	5	270	5.0	5.0m	800		175A	A146m
173	MZ5227	10	270	5.	5.0m	800	12.	175J	A60as
174▼	BZW03/D270	10	270	6.0	5.0m	1.2k	13	175J	A333e
175	BZT03C270		270	600	2.0m	450			A333c
176	1N5130	5	280	5.0	4.0m	850		175A	A146m
177	MZ5128	5	280	5.0	4.0m	850	11		A60f
178	UZ5128	5	280	5.0	4.0m	850	12	175A	A380a
179	MZ5228	10	280	5.0	4.0m	850	11		A60f
180	UZ5228	10	280	5.0	4.0m	850	12	175A	A380a
181	MZ5328	20	280	5.0	4.0m	850	11		A60f
182	UZ5328	20	280	5.0	4.0m	850	12	175A	A380a
183	1N4993	5	300	5.0	4.0m	950		175A	A146m
184	MZ5130	5	300	5.0	4.0m	950	11		A60f
185	UDZ5130Ø	5	300	5.0	5.0m	950		175A	A356b
186	UZ5130	5	300	5.0	4.0m	950	12	175A	A380a
187	MZ5230	10	300	5.0	4.0m	950	11		A60f
188	UDZ5230Ø	10	300	5.0	5.0m	950		175A	A356b
189	UZ5230	10	300	5.0	4.0m	950	12	175A	A380a
190	MZ5330	20	300	5.0	4.0m	950	11		A60f
191	UZ5330	20	300	5.0	4.0m	950	12	175A	A380a
192	1N5131	5	320	5.0	4.0m	1.1k		175A	A146m
193	MZ5132	5	320	5.0	4.0m	1.1k	11		A60f
194	UZ5132	5	320	5.0	4.0m	1.1k	12	175A	A380a
195	MZ5232	10	320	5.0	4.0m	1.1k	11		A60f
196	UZ5232	10	320	5.0	4.0m	1.1k	12	175A	A380a
197	MZ5332	20	320	5.0	4.0m	1.1k	11		A60f

SYMBOLS AND CODES EXPLAINED IN INTERPRETER

10. VOLTAGE REGULATOR DIODES, POWER - $V_Z \geq 200$ V (Cont'd)

IN ORDER OF: (1) REF. VOLTAGE (2) MAX PD MAX (3) TOLERANCE & (4) TYPE NUMBER

LINE No.	4 TYPE NUMBER	3 TOL. ± (%)	1 NOM. REF. VOLT. (V)	2 PD @ 25°C MAX (W)	TEST CUR. Izt (A)	MAX. DYN. IMP. (Ω)	TEMP. COEFF Tc MAX	MAX. TEMP (°C)	DWG. NO.
1	UZ5332	20	320	5.0	4.0m	1.1k	12	175A	A380a
2	1N4994	5	330	5.0	4.0m	1.1k		175A	A146m
3	MZ5233	10	330	5.	4.0m	1.1k	12.	175J	A60as
4	1N5132	5	340	5.0	4.0m	1.2k		175A	A146m
5	MZ5134	5	340	5.0	4.0m	1.2k	11		A60f
6	UZ5134	5	340	5.0	4.0m	1.2k	12	175A	A380a
7	MZ5234	10	340	5.0	4.0m	1.2k	11		A60f
8	UZ5234	10	340	5.0	4.0m	1.2k	12	175A	A380a
9	MZ5334	20	340	5.0	4.0m	1.2k	11		A60f
10	UZ5334	20	340	5.0	4.0m	1.2k	12	175A	A380a
11	1N4995	5	360	5.0	3.0m	1.4k		175A	A146m
12	MZ5136	5	360	5.0	3.0m	1.4k	11		A60f
13	UZ5136	5	360	5.0	3.0m	1.4k	12	175A	A380a
14	MZ5236	10	360	5.0	3.0m	1.4k	11		A60f
15	UZ5236	10	360	5.0	3.0m	1.4k	12	175A	A380a
16	MZ5336	20	360	5.0	3.0m	1.4k	11		A60f
17	UZ5336	20	360	5.0	3.0m	1.4k	12	175A	A380a
18	1N5133	5	380	5.0	3.0m	1.5k		175A	A146m
19	MZ5138	5	380	5.0	3.0m	1.5k	11		A60f
20	UZ5138	5	380	5.0	3.0m	1.5k	12	175A	A380a
21	MZ5238	10	380	5.0	3.0m	1.5k	11		A60f
22	UZ5238	10	380	5.0	3.0m	1.5k	12	175A	A380a
23	MZ5338	20	380	5.0	3.0m	1.5k	11		A60f
24	UZ5338	20	380	5.0	3.0m	1.5k	12	175A	A380a
25	1N4996	5	390	5.0	3.0m	1.8k		175A	A146m
26	MZ5239	10	390	5.	3.0m	1.8k	12.	175J	A60as
27	1N5134	5	400	5.0	3.0m	1.8k		175A	A146m
28	MZ5140	5	400	5.0	3.0m	1.8k	11		A60f
29	UZ5140	5	400	5.0	3.0m	1.8k	12	175A	A380a
30	MZ5240	10	400	5.0	3.0m	1.8k	11		A60f
31	UZ5240	10	400	5.0	3.0m	1.8k	12	175A	A380a
32	MZ5340	20	400	5.0	3.0m	1.8k	11		A60f
33	UZ5340	20	400	5.0	3.0m	1.8k	12	175A	A380a
34	Z7B400	5†	400	25	50m	200	11	200J	S457☑

LINE No.	4 TYPE NUMBER	3 TOL. ± (%)	1 NOM. REF. VOLT. (V)	2 PD @ 25°C MAX (W)	TEST CUR. Izt (A)	MAX. DYN. IMP. (Ω)	TEMP. COEFF Tc MAX	MAX. TEMP (°C)	DWG. NO.

Is second sourcing a problem? D.A.T.A. now publishes a complete alternate source series which lists over 500,000 direct and 500,000 suggested replacements.

SYMBOLS AND CODES EXPLAINED IN INTERPRETER

11. RECTIFIERS, HIGH VOLTAGE - PIV ≥ 1 kV

IN ORDER OF: (1) PIV (2) IO MAX (3) @ TEMP & (4) TYPE NUMBER

LINE No.	4 TYPE NUMBER	1 PIV (V)	MAX AVG FWD DC CURRENT 2 Io MAX (A)	3 @ TEMP (°C)	MAX RATING SURGE CURR PEAK 1 Cy (A)	PULSE WIDTH (s)	MAX. TEMP (°C)	MAT	DRAWING NO.
1♦	SR1214	1.4	12					Si	D04
PIV ≥ 1 kV									
5	SCSM0	1.0k					150A	Si	S545
6♦	HS10	1.0k	7.5m	50	1.5 §	8.3m	175	Si	A298ad
7	1G1	1.0k	.01	25	1.0		150A	Si	DO7
8	MC153	1.0k	.01	25	1.0	8.0m		Si	A1db
9	BYT61-1000	1.0k	12m	108C	150	10m	108C	Si	DO4
10	MC152	1.0k	.02	25	2.0	8.0m		Si	A1db
11	DD10	1.0k	30m	25A	4.0	8.3	100A	Si	A109b
12	BYT65-1000	1.0k	30m	96C	300	10m	150J	Si	DO5
13	MC151	1.0k	.04	25	3.0	8.0m		Si	A1db
14	MHVG10	1.0k	50m		20	1.0m	125	Si	A249e
15	1N889	1.0k	.05	25A	.50		200S	Si	A1bz
16	BA133	1.0k	.05	25			125J	Si	A1bn
17	VA10	1.0k	50m	40A	3.0	8.3m	150A	Si△	A1m
18	LK1	1.0k	50m	50A	2.0	8.0m	150A	Si	A3aa
19	HV10E	1.0k	50m	100A			150A	Si	A1xe
20	HV10K	1.0k	50m	100			175	Si	A1fe
21	HV10M	1.0k	50m	100A			150A	Si	A1xd
22	HV10P	1.0k	50m	100A			150A	Si	A94q
23	1N1730A	1.0k	50m	175$	9.0	8.0m	200A	Si	A1gd
24	CER73A	1.0k	.075	75A	48	4.0m	150A	Si	DO27
25	1N365	1.0k	100m	25$			150C	Si	DO2
26	1N878	1.0k	.10	25A	1.0		200S	Si	A1bz
27	1N3282	1.0k	.10	25A	2.5		150A	Si△	DO7
28	10R10B	1.0k	.10	25	60		175	Si	
29	PS2417	1.0k	.10	25A				Si	C15
30	S210	1.0k	100m	25$	15			Si	A54
31	VB10	1.0k	100m	40A	3.0	8.3m	150A	Si△	A298m
32	VG1	1.0k	100m	40A	3.0	8.3m	150A	Si△	A298j
33	1N2374	1.0k	.10	100A	12	8.3m	150A	Si	A1fu
34	1N1408	1.0k	.125	75A	6.0		150	Si	A53
35	1N867	1.0k	.15	25A	1.5		200S	Si	A1bz
36	1N2502	1.0k	.15	25A			150A	Si	A6
37	1S2315	1.0k	150m	25A	10		125J	Si	
38	M73A	1.0k	.15	50	50	8.3m	175	Si	A3h
39	1N598	1.0k	.15	55A	4.0	1.0m	150A	Si	A31x
40	CER73B	1.0k	.15	75A	48	4.0m	150A	Si	DO27
41	1N365A	1.0k	.15	100A	10		150	Si	DO2
42	CP103	1.0k	.15	100				Si	M84af
43	1N856	1.0k	.20	25A	2.0		200S	Si	A1bz
44	1N1730	1.0k	.20	25A	2.5	8.0m	150A	Si	A1gd
45	A1M1	1.0k	.20	25	60		175A	Si	A41q
46	A1M5	1.0k	.20	25	60		175A	Si	A41q
47	A1M9	1.0k	.20	25	60		175A	Si	A41q
48	B1M1	1.0k	.20	25	60		175A	Si	A1rx
49	B1M5	1.0k	.20	25	60		175A	Si	A1rx
50	B1M9	1.0k	.20	25	60		175A	Si	A1rx
51	PS1140	1.0k	.20	25A	2.5 §	8.0m	175A	Si	A1gd
52	K1M5	1.0k	.20	50	60		150C	Si	
53	RU1C	1.0k	200m	50	15	10m	130	Si△	A344i
54	B427-10	1.0k	200m	55	4.0		150	Si△	A50f
55	B587-10	1.0k	200m	55	4.0			Si△	A69r
56	1N2372	1.0k	.20	150C	12	8.3m	175C	Si	DO4
57	1N1261	1.0k	.24	25A	15		165A	Si	A53
58	1N2880	1.0k	250m	25A			150S	Si	M122a
59	1N2881	1.0k	250m	25A			150S	Si	A83w
60	1N2882	1.0k	250m	25A			150S	Si	M122a
61	1N2883	1.0k	250m	25A			150S	Si	A83w
62	67D010H53PNN	1.0k	250m	50A	35		150A	Si	A1yu
63	HVE10	1.0k	250m	50	14	8.3m	175A	Si	A298s
64	M73B	1.0k	.25	50	50	8.3m	175	Si	A3h
65	7D10	1.0k	250m	65A	3.0	8.3m	150A	Si	DO7
66	CER73C	1.0k	.25	75A	48	4.0m	150A	Si	DO27
67	GI250-1	1.0k	250m	75A	15		175	Si	E204p
68	1N322	1.0k	.25	100$	10		200	Si	DO2
69	1N322A	1.0k	.25	100$	10		200	Si	DO2
70	1N561	1.0k	.25	100A	1.0		140A	Si	DO3
71	1N2506	1.0k	.30	25A			150A	Si	A6
72	1S2312	1.0k	300m	25A	30		125J	Si	
73	GFA03L	1.0k	.30	40	25		125J	Si△	A249f
74	HVG-1	1.0k	300m	55A	25		175	Si	E204p
75	HV10PA	1.0k	350m	100A			150A	Si	A94q
76	1N3486	1.0k	.40	35A	10		125A	Si	DO1
77	K2M5	1.0k	.40	50	60		150C	Si	
78	1N3563	1.0k	.40	75A			100A	Si△	A50a
79	1N329	1.0k	.40	100$	10		150C	Si	DO2
80	1N329A	1.0k	.40	100$	10		150C	Si	DO2
81	1N563	1.0k	.40	100A	2.0		140A	Si	DO4
82	V30L	1.0k	400m	100L	30	10m	150J	Si	A313d
83	A2M4	1.0k	.475	25A	25		175A	Si	A41p
84	1N3186	1.0k	.50	25A	4.0	1	150A	Si	M82a
85	MT100#B	1.0k	.50	25A	10		175A	Si	A60e
86	MT100A	1.0k	.50	25A	10		175A	Si	A60e
87	S62	1.0k	.50	25$	15			Si	A54
88	1N3232	1.0k	500m	50A	12		175S	Si	A1cs
89	DFC05L	1.0k	.50	50	20		125J	Si△	A298r
90	EF100	1.0k	500m	50A	35	8.0m	150A	Si	A3aa
91	M73C	1.0k	.50	50	50	8.3m	175	Si	A3h
92	500S10	1.0k	500m	55	35	8.3m	150A	Si	A1tp
93	1N3869	1.0k	.50	60A	5.0 §		200A	Si	A1ds
94	1N3752	1.0k	.50	75A	20	8.0m	150A	Si	A1cm
95	CER73D	1.0k	.50	75A	48	4.0m	150A	Si	DO27
96	1T510	1.0k	.50 Ø	85A	35		100A	Si	A3x
97	1N4011	1.0k	.50	100A	30 §		175A	Si	DO13
98	A2M1	1.0k	.60	25	60		175A	Si	A41q
99	A2M5	1.0k	.60	25	60		175A	Si	A41q
100	A2M9	1.0k	.60	25	60		175A	Si	A41q
101	B2M1	1.0k	.60	25	60		175A	Si	A1rx
102	B2M5	1.0k	.60	25	60		175A	Si	A1rx
103	B2M9	1.0k	.60	25	60		175A	Si	A1rx
104	FR067L	1.0k	600m	50A	50		175A	Si	DO15
105	K3M5	1.0k	.60	50	60		150C	Si	
106	RH1C	1.0k	600m	50	35	10m	130	Si△	A344i
107	RL067	1.0k	600m	50A	50		175A	Si	DO41
108	SH-1C	1.0k	600m	50A	30	10m	130J	Si	A271
109	1N2865	1.0k	700m		7.0	8.3m	200A	Si	A86b
110	1N2775	1.0k	.75	25A	15		165S	Si	A145
111	1N3638	1.0k	750m	25A	30	8.3m	175A	Si	A344
112	75R10B	1.0k	.75	25	60		175	Si	
113	A3M1	1.0k	.75	25	60		175A	Si	A41q
114	A3M5	1.0k	.75	25	60		175A	Si	A41q
115	A3M9	1.0k	.75	25	60		175A	Si	A41q
116	B3M1	1.0k	.75	25	60		175A	Si	A1rx
117	B3M5	1.0k	.75	25	60		175A	Si	A1rx
118	B3M9	1.0k	.75	25	60		175A	Si	A1rx
119	UT120	1.0k	.75	25A	15	8.3m		Si	A146f
120	1N2617	1.0k	.75	50A	30		175A	Si	A31a
121	1N3243	1.0k	750m	50A	15		175S	Si	A1cs
122	1N3723	1.0k	.75	50A	12		175A	Si	A1bp
123	A3M3	1.0k	.75	50A	35		175A	Si	A41p
124	M73	1.0k	.75	50	50	8.3m	175	Si	A3h
125	SRS1100HE	1.0k	750m	55A	20		175A	Si△	A340c
126	1S1944J	1.0k	750m	65A	35	10m	125J	Si	DO15
127	1N3281	1.0k	.75	70A	25	8.0m	150A	Si	A1cm
128	CER73	1.0k	.75	75A	48	4.0m	150A	Si	DO27
129	S61	1.0k	.75	80$	15			Si	A54
130	ID10080	1.0k	800m		7.5k		190	Si	M681
131	SLD1U	1.0k	800m	25A	30	8.0m	150A	Si	Alqd
132	1S2406	1.0k	800m	40A	50	8.3m	130J	Si△	A1bv
133	1S1348	1.0k	.80	50A	40	8.3m	150J	Si△	A89b
134	K4M5	1.0k	.80	50	60		150C	Si	
135	LBA-10	1.0k	800m	50A	30	10m	150J	Si	M1280†
136	RA-1C	1.0k	800m	50A	40	10m	130J	Si	A334
137	RM1C	1.0k	800m	50	40	10m	130	Si△	A344i
138	SLD1V	1.0k	800m	50A	30	8.0m	150A	Si	Alfu
139	1S2308	1.0k	800m	65A	60		150J	Si	A56a
140	A4M1	1.0k	.85	25	60		175A	Si	A41q
141	A4M5	1.0k	.85	25	60		175A	Si	A41q
142	A4M9	1.0k	.85	25	60		175A	Si	A41q
143	B4M1	1.0k	.85	25	60		175A	Si	A1rx
144	B4M5	1.0k	.85	25	60		175A	Si	A1rx
145	B4M9	1.0k	.85	25	60		175A	Si	A1rx
146	B1280L	1.0k	850m	45A	50	10m	140J	Si	
147	SSiB0580	1.0k	.85	45A	50	10m	150J	Si△	M441
148	1N1443A	1.0k	.95	25A	25		135A	Si	DO1
149	PR208-RT	1.0k	955m		50			Si	DO15
150	10SM1	1.0k	1.0		40			Si	A3ah
151	ERB12-10	1.0k	1.0		50		140J	Si	A387
152	SIB01-10	1.0k	1.0		50		140J	Si	A21b
153	1N2224	1.0k	1.0	25$	20		150	Si△	DO4
154	1N2224A	1.0k	1.0	25$	20		150	Si△	DO4
155	1N2225	1.0k	1.0	25$	20		150	Si△	S35
156	1N2225A	1.0k	1.0	25$	20		150	Si△	S35
157	1N3957	1.0k	1.0	25A	20		200S	Si	DO41
158	100R10B	1.0k	1.0	25	60		175	Si	
159	A5M1	1.0k	1.0	25	60		175A	Si	A41q
160	A5M5	1.0k	1.0	25	60		175A	Si	A41q
161	A5M9	1.0k	1.0	25	60		175A	Si	A41q
162	B5M1	1.0k	1.0	25	60		175A	Si	A1rx
163	B5M5	1.0k	1.0	25	60		175A	Si	A1rx
164	B5M9	1.0k	1.0	25	60		175A	Si	A1rx
165	B223-10	1.0k	1.0	25	60		175A	Si	A1rx
166	DSA10L	1.0k	1.0	25	30		150J	Si△	A298r
167	KBPS-10	1.0k	1.0	25A	50		150S	Si	A418
168	MB251	1.0k	1.0	25	20	8.3m	175A	Si	A60f
169	PTC203	1.0k	1.0	25	30			Si	A1bc
170▼	SM4007	1.0k	1.0	25A	30	8.3m	175A	Si	F149
171	TG10	1.0k	1.0	25A	35		140J	Si	A1aat
172	UT347	1.0k	1.0	25A	20	8.3m	175	Si	A380
173	423MB2Al1	1.0k	1.0	40A	50		150A	Si	M1017†
174	423MC2Al1	1.0k	1.0	40A	50		150A	Si	M1017†
175	SM1A10	1.0k	1.0	40A	45	10m	140J	Si	A437
176	SM-1A-10	1.0k	1.0	40A	45	10m	140J	Si	A437
177	1G10	1.0k	1.0	50A	50	8.3m	175A	Si	A313j
178	1N3252	1.0k	1.0	50A	20		175S	Si	A1cs
179	1N4586	1.0k	1.0	50A	50		175A	Si	DO29
180	1NE11	1.0k	1.0	50C	50	10m	150J	Si	A299
181	1S2274	1.0k	1.0	50	35	10m	175J	Si	
182	425SH2AB1	1.0k	1.0	50A	50		150A	Si	A69ak
183	BRR107	1.0k	1.0	50A	30	8.3m	125	Si	C209k†
184	K5M5	1.0k	1.0	50	60		150C	Si	
185	PB107M	1.0k	1.0	50A	30	8.3m	125J	Si	C257†
186	SMB10	1.0k	1.0	50A	45	10m	125J	Si	
187	SX10#B	1.0k	1.0	50	60	8.3m	150	Si	A344b
188	SXS10	1.0k	1.0	50	60	8.3m	150	Si	A344b
189	WL10F	1.0k	1.0	50	30	10m	150	Si	C204
190	1N4249	1.0k	1.0	55A	25	8.3m	160A	Si	A1tc
191	B588-10	1.0k	1.0	55	25			Si△	A69s
192	BA223-10	1.0k	1.0	55	25			Si△	A1rx
193	F10	1.0k	1.0	55A	70			Si	A3r
194	FR107G	1.0k	1.0	55A	50		175A	Si	DO41
195	S1000HE	1.0k	1.0	55A	20		150	Si	M1310
196	SRS1100	1.0k	1.0	55A	50		175A	Si	A340
197	SB-2C	1.0k	1.0	60A	100	10m	150J	Si	A268
198	1S1830	1.0k	1.0	65A	45	10m	125J	Si	DO15
199	VE108*	1.0k	1.0	65A	25	8.3m	150J	Si	M904
200	1N3761	1.0k	1.0	70A	30		150A	Si	A1cm
201	BYW27-1000	1.0k	1.0	70A	50	10m	150J	Si	A1bg
202	1N4007	1.0k	1.0	75A	30	8.3m	175A	Si	DO41
203▼	1N4007F	1.0k	1.0	75A	30			Si	DO41
204▼	1N4007G	1.0k	1.0	75A	50	8.3m	175A	Si	DO41
205	3N252	1.0k	1.0	75A	30		150J	Si	M594g
206	10D10	1.0k	1.0	75A	50		150J	Si	A1aaw
207	BA5M5	1.0k	1.0	75	30		175	Si	A1rx
208	EM513	1.0k	1.0	75	50	10m	175J	Si△	A1bg
209	GER4007	1.0k	1.0	75	30		175	Si	A249b
210	GL41M	1.0k	1.0	75A	30	8.3m	150J	Si	F137
211	GPP1M	1.0k	1.0	75A	60	8.3m	175J	Si	u10b
212	MDA110A	1.0k	1.0	75A	30		150J	Si	M999
213	MR1-1000	1.0k	1.0	75A	30		175J	Si	
214	PL10HZ	1.0k	1.0	75A	50	10m	150J	Si	A1bg
215▼	RL107G	1.0k	1.0	75A	50	8.3m	175A	Si	A395
216	1S2610	1.0k	1.0	80A	45		165J	Si△	A249a
217	F14J	1.0k	1.0	80A	45		165J	Si△	A249a
218	U30J	1.0k%	1.0	80L	50	10m	150J	Si	A94m
219	GSB10L	1.0k	1.0	85	30		150J	Si△	A249f
220	U31J	1.0k%	1.0	90L	30	10m	140J	Si	A94m

SYMBOLS AND CODES EXPLAINED IN INTERPRETER

11. RECTIFIERS, HIGH VOLTAGE - PIV ≥ 1 kV (Cont'd)

IN ORDER OF: (1) PIV (2) IO MAX (3) @ TEMP & (4) TYPE NUMBER

LINE No.	4 TYPE NUMBER	1 PIV (V)	MAX AVG FWD DC CURRENT 2 Io MAX (A)	3 @ TEMP (°C)	MAX RATING SURGE CURR PEAK 1 Cy (A)	PULSE WIDTH (s)	MAX. TEMP (°C)	MAT	DRAWING NO.
1	1NZ61	1.0k	1.0	100A	30	10m	175J	Si	A109e
2	A5M2	1.0k	1.0	100A	45		200A	Si	A41p
3	A14P	1.0k	1.0	100	50	8.3m	175J	Si	A94g
4	A1000	1.0k	1.0	100	60	10m		Si	A1by
5	ER407	1.0k	1.0	100	50		175	Si	DO41
6	MR1000	1.0k	1.0	100A	50	8.0m	150A	Si	A1dk
7	R1000	1.0k	1.0	100	50 §	8.0u	150A	Si	
8	U32J	1.0k%	1.0	100L	50	10m	150J	Si	A94m
9	1N3650	1.0k	1.0	150C	25	8.3m	175C	Si	DO4⊠
10	HC73	1.0k	1.1	25A	50	2.0m	150A	Si	DO27
11	SSiB0680	1.0k	1.1	45A	50	10m	160J	Si△	A3v
12	SSiC1780	1.0k	1.1	45A	100	10m	150J	Si△	M441
13	HC73F	1.0k	1.1	50A	50	8.0m	175A	Si	F29
14	MH73	1.0k	1.1	50	50	8.3m	175	Si	A3h
15	V06J	1.0k%	1.1	90L	35	10m	175J	Si	A333
16	ERC04-10	1.0k	1.2		100		140J	Si	A21b
17	A6M1	1.0k	1.2	25	60		175A	Si	A41q
18	A6M5	1.0k	1.2	25	60		175A	Si	A41q
19	A6M9	1.0k	1.2	25	60		175A	Si	A41q
20	B6M1	1.0k	1.2	25	60		175A	Si	A1rx
21	B6M5	1.0k	1.2	25	60		175A	Si	A1rx
22	B6M9	1.0k	1.2	25	60		175A	Si	A1rx
23	EC100	1.0k	1.2	50A	75	8.0m	150A	Si△	A3aa
24	K6M5	1.0k	1.2	50	60		150C	Si	
25	RA-2C	1.0k	1.2	50A	100	10m	130J	Si△	A364
26	RM2C	1.0k	1.2	50	100	10m	130	Si△	A344l
27	RO2C	1.0k	1.2	50J	80	10m	130S	Si	A344h
28	BYW96E	1.0k	1.2	55A	50	10m	165J	Si	A333d
29	1S1892	1.0k	1.2	65A	60		175J	Si	A56b
30	F101	1.0k	1.25	25A	30	10m	150J	Si	DO4
31	UT363	1.0k	1.25	25A	20	8.3m	175A	Si	A380
32	SSiB0180	1.0k	1.25	45A	50	10m	180J	Si△	A31v
33	GM-1C	1.0k	1.3	40	35	10m	175J	Si	A333
34	V03J	1.0k%	1.3	90L	40	10m	175J	Si	A94z
35	S10003HE	1.0k	1.35	55A	20		150	Si	M1312
36	ERC01-10	1.0k	1.5		130		140J	Si	A424
37	1AS029	1.0k	1.5	25	125	10m	150A	Si	DO1
38	150R10B	1.0k	1.5	25	60		175	Si	
39	A7M1	1.0k	1.5	25	60		175A	Si	A41q
40	A7M5	1.0k	1.5	25	60		175A	Si	A41q
41	A7M9	1.0k	1.5	25	60		175A	Si	A41q
42	B7M1	1.0k	1.5	25	60		175A	Si	A1rx
43	B7M5	1.0k	1.5	25	60		175A	Si	A1rx
44	B7M9	1.0k	1.5	25	60		175A	Si	A1rx
45	BRR157	1.0k	1.5	25A	50	8.3m	125	Si	C209k†
46	M1M1	1.0k	1.5	25	250		175A	Si	A1ep
47	M1M5	1.0k	1.5	25	250		175A	Si	A1ep
48	M1M9	1.0k	1.5	25	250		175A	Si	A1ep
49	PS2347	1.0k	1.5	25A			175A	Si	M22
50	SI10	1.0k	1.5	25A	80		150C	Si	A1ty
51	UT364	1.0k	1.5	25A	25	8.3m	175A	Si	A380
52	W10*	1.0k	1.5	25	50		25A	Si	C209h †
53	W10F	1.0k	1.5	25	50	10m	150	Si	C204
54	WCN10*	1.0k	1.5	25	30		150S	Si	C208⊠
55	1N5054	1.0k	1.5	40A	50 §		170A	Si	A3an
56	RB157	1.0k	1.5	40A	50	8.0m	150S	Si	M†
57	SM1.5-10	1.0k	1.5	40A	60	10m	125J	Si	A277d
58	BYX86	1.0k	1.5	45A	50		175J	Si§	A94s
59	BRF157	1.0k	1.5	50A	50	8.3m	125	Si	C222m†
60	CTNRB157	1.0k	1.5	50A	50		125A	Si	C208a *
61	CTPRB157	1.0k	1.5	50A	50		125A	Si	C208a *
62	K7M5	1.0k	1.5	50	60		150C	Si	
63	P100M	1.0k	1.5	50A	50	8.0m	175	Si	DO27
64	PBP157	1.0k	1.5	50	50	8.3m	125	Si	C258†
65	RB157F	1.0k	1.5	50A	50		125A	Si	C209h †
66	RL157	1.0k	1.5	50C	60		175A	Si	DO15
67	BYX45-1000R	1.0k	1.5	55A	40	10m	150J	Si	DO1
68	FR157G	1.0k	1.5	55A	55		175A	Si	DO15
69	J10G	1.0k	1.5	55A	60		175A	Si	DO15
70	NSS3066A	1.0k	1.5	55C	35			Si	C190b
71	RL157G	1.0k	1.5	55A	60		175A	Si	DO15
72	SA-2C	1.0k	1.5	60A	100	10m	140J	Si	A268
73	1S1888J	1.0k	1.5	65A	60	10m	150J	Si	A1jw
74	1S2235	1.0k	1.5	65A	100	10m	175J	Si	A56a
75	1N5399	1.0k	1.5	70C	50 §		170C	Si	DO15
76▼	1N5399G	1.0k	1.5	70A	50	8.3m	175A	Si	DO15
77	1N5399GP	1.0k	1.5	70A	50	8.3m	175A	Si	DO15
78	AE1G	1.0k	1.5	75A	60	8.0m	175A	Si	DO15
79	CTP1000	1.0k	1.5	75	50	10m	175A	Si	M594a*
80	J10	1.0k	1.5	75A	60	8.0m	175A	Si	DO15
81	TA100	1.0k	1.5	75A	30	8.3m	175A	Si	A298ap
82	D1.5/1000	1.0k	1.5	120A	50 §	10m	175J	Si§	A249k
83	DA1.5/1000	1.0k	1.5	120A	50 §	10m	175J	Si§	A249k
84	SSiC0880	1.0k	1.6	45A	100	10m	180J	Si△	A31v
85	1N1444A	1.0k	1.6	50$	30			Si	S25a
86	1N1444B	1.0k	1.6	50$	30			Si	S25a
87	1N1443	1.0k	1.6	140C	20		175J	Si	DO1
88	1N1443B	1.0k	1.6	140C	25		150J	Si	A34a
89	1N1444	1.0k	1.6	140C	20		175J	Si	S25
90	20E10	1.0k	1.7	43A	80	10m	150J	Si	A1aaV
91	PR295-RT	1.0k	1.9		200			Si	DO1
92	SSiC1180	1.0k	1.9	45A	100	10m	180J	Si△	A230
93	F799-10G	1.0k	2.0		50			Si	M117g
94	1N3942	1.0k	2.0	25	30		165	Si	DO13
95	3N259	1.0k	2.0	25A	60		175J	Si	M594g
96	200R10B	1.0k	2.0	25	60		175	Si	
97	BY56	1.0k	2.0	25C	50	10m	165J	Si	A249c
98	BYW56	1.0k	2.0	25L	50 §	10m	165J	Si△	A249k
99	F102	1.0k	2.0	25A	70	10m	175J	Si	DO13
100	F102Z	1.0k	2.0	25A	70	10m	175J	Si	DO13
101	M2M1	1.0k	2.0	25	250		175A	Si	A1ep
102	M2M5	1.0k	2.0	25	250		175A	Si	A1ep
103	M2M9	1.0k	2.0	25	250		175A	Si	A1ep
104	TG210	1.0k	2.0	25A	60		140J	Si	A1aau
105	523MB2AI1	1.0k	2.0	40A	125		150A	Si	M1017†
106	523MC2AI1	1.0k	2.0	40A	125		150A	Si	M1017†
107	2A1000	1.0k	2.0	50A	200	8.0m	175A	Si	A3t
108	2G10	1.0k	2.0	50A	50	8.3m	175A	Si	A313j
109	423EF2AH1	1.0k	2.0	50A	50		150A	Si	M1233
110	B8M5	1.0k	2.0	50	90	8.3m	175A	Si	A1rx
111	B172-100	1.0k	2.0	50	60		150C	Si	
112	BRF207	1.0k	2.0	50A	60	8.3m	125	Si	C222m†
113	FR207	1.0k	2.0	50A	70		175A	Si	DO15
114	K8M5	1.0k	2.0	50	60		150C	Si	
115	PBP207	1.0k	2.0	50	60	8.3m	125	Si	C258†
116	PD100	1.0k	2.0	50A	50		125A	Si	M40a*
117▼	RL207	1.0k	2.0	50A	70	8.3m	175A	Si	DO15
118	RL210	1.0k	2.0	50A	70		175A	Si	DO15
119	SI10A	1.0k	2.0	50A	80	10m	150C	Si	A1bc
120	FR207G	1.0k	2.0	55A	65		175A	Si	DO15
121	MDA210	1.0k	2.0	55A	60		165J	Si	M999
122	SRS2100	1.0k	2.0	55A	65		175A	Si	A340
123	RL207G	1.0k	2.0	75A	70		175A	Si	DO15
124	20D10	1.0k	2.0	100L	50	8.3m	170J	Si	DO39
125	BY246-1000	1.0k	2.5		80	10m	175J	Si	A313l
126	ERC16-10	1.0k	2.5		80		175J	Si	A313l
127	RL257	1.0k	2.5		150		175A	Si	A1aak
128	250R10B	1.0k	2.5	25	250		175	Si	
129	FR257	1.0k	2.5	25J	150		175A	Si	Alaak
130	GM-3C	1.0k	2.5	25A	80	10m	175J	Si△	A249c
131	M2.5A	1.0k	2.5	25A	80	10m		Si	A1bc
132	M3M1	1.0k	2.5	25	250		175A	Si	A1ep
133	M3M5	1.0k	2.5	25	250		175A	Si	A1ep
134	M3M9	1.0k	2.5	25	250		175A	Si	A1ep
135	PTC205	1.0k	2.5	25	80			Si	A1bc
136	M2-1000	1.0k	2.5	30A	100		150J	Si	A435
137	M2-1000R	1.0k	2.5	30A	100		150J	Si	A435
138	MZ2-1000	1.0k	2.5	30A	100		150J	Si	A435
139	MZ2-1000R	1.0k	2.5	30A	100		150J	Si	A435
140	BRF257	1.0k	2.5	55A	150	8.3m	125	Si	C222n†
141	FR257G	1.0k	2.5	55A	100		175A	Si	A1aaz
142	GP25M	1.0k	2.5	55A	100		175	Si	E201d
143	RL257G	1.0k	2.5	55A	100		175A	Si	A1aaz
144	1N2534	1.0k	2.5	150C	50		150C	Si	DO10
145	1N2545	1.0k	2.5	150C	50		150C	Si△	DO10
146	1N2556	1.0k	2.5	150C	50		150C	Si△	DO10
147	10SM3	1.0k	3.0		80			Si	A3ai
148	MR918	1.0k	3.0		100		175J	Si	A282⊠
149♦	SR0310	1.0k	3.0						D04
150	1N2242	1.0k	3.0	25$	20		150	Si△	DO4
151	1N2242A	1.0k	3.0	25$	100		150	Si△	DO4
152	1N2243	1.0k	3.0	25$	20		150	Si△	S35
153	1N2243A	1.0k	3.0	25$	100		150	Si△	S35
154	300R10B	1.0k	3.0	25	250		175	Si	
155	BYW86	1.0k	3.0	25	80	10m	175J	Si§	A249l
156	M4M1	1.0k	3.0	25	250		175A	Si	A1ep
157	M4M5	1.0k	3.0	25	250		175A	Si	A1ep
158	M4M9	1.0k	3.0	25	250		175A	Si	A1ep
159	PTC204	1.0k	3.0	25	80			Si	A1bc
160	1N5003	1.0k	3.0	40A	300 §		175A	Si	M176a
161	3G10	1.0k	3.0	40A	125	8.3m	175A	Si	A313k
162	V3310	1.0k	3.0	40A	100	8.3m	150J	Si	A1zz
163	V3510	1.0k	3.0	40A	200	8.3m	150J	Si	A1zz
164	SSiC1280	1.0k	3.0	45A	100	10m	180J	Si△	A231
165	1N4145	1.0k	3.0	50A	300	8.3m	175A	Si	A1vm
166	3A1000	1.0k	3.0	50A	50	8.0m	150	Si	A1eq
167	3A1000FS	1.0k	3.0	50	50	8.0m	150	Si	A298q
168	3C1000	1.0k	3.0	50A	300	8.3m	175A	Si	A3q
169	3NC12	1.0k	3.0	50A	90		150J	Si	S19s
170	BRS307	1.0k	3.0	50A	50	8.3m	125	Si	C219h†
171	HAB100	1.0k	3.0	50	300	8.3m	150A	Si	A1ez
172	PF10HZ	1.0k	3.0	50A	100	10m	150J	Si	DO27
173	S3A10	1.0k	3.0	50A	300	8.3m	175C	Si	A1ey
174	1N3369	1.0k	3.0	55C	30	8.3m	200C	Si	S505
175	FR307G	1.0k	3.0	55A	125		175A	Si	DO27
176	SDA113G	1.0k	3.0	55C	50		125	†	M1158
177	SRS3100	1.0k	3.0	55A	125		175A	Si	A340a
178	G4M	1.0k	3.0	70A	125	8.3m	175A	Si	A313n
179	1N4725	1.0k	3.0	75A	300		175A	Si	A179a⊠
180▼	1N5408G	1.0k	3.0	75A	200	8.3m	175A	Si	DO27
181	3E10	1.0k	3.0	75A	300	4.0m	175A	Si	A1vk
182	AE3G	1.0k	3.0	75A	300	4.0m	175A	Si	A1vk
183	BYW17-1000	1.0k	3.0	80A	240	10m	150J	Si	A318
184	BYW18-1000	1.0k	3.0	80A	240	10m	150J	Si	A318
185	S60	1.0k	3.0	80$	20			Si	S48
186	GI510	1.0k	3.0	95A	100	8.3m	175A	Si	DO201
187	MR510	1.0k	3.0	95A	100		175J	Si	A282
188	HR1000	1.0k	3.0	100	300 §	8.0m	150A	Si	A1sm
189	P300M	1.0k	3.0	100A	200	8.3m	175	Si	A3ac
190	U15J	1.0k%	3.0	100L	60	10m	175J	Si	A94m
191	1N5408	1.0k	3.0	105C	200 §		170C	Si	A3q
192	DA3/1000	1.0k	3.0	120A	80 §	10m	175J	Si§	A249l
193	1S419	1.0k	3.0	125S	33		150S	Si	S61△
194	3NF11	1.0k	3.0	155C	90	10m	175J	Si	S187a
195	3QF11	1.0k	3.0	155C	90	10m	175J	Si	S187a
196	350R10B	1.0k	3.5	25	250		175	Si	
197	BYM56E	1.0k	3.5	50C	80		175J	Si	A313
198	400R10B	1.0k	4.0	25	250		175	Si	
199	BRF407	1.0k	4.0	50A	200	8.3m	125	Si	C222p†
200	SSiC1380	1.0k	4.0	120C	100	10m	150J	Si△	S112b△
201	450R10B	1.0k	4.5	25	250		175	Si	
202	BY359-1000	1.0k	4.5	102A	60		125J	Si	TO220A
203	5A1000	1.0k	5.0		300			Si	Aleq
204	5C1000	1.0k	5.0		300			Si	A3q
205	500R10B	1.0k	5.0	25	250		175	Si	
206	SB507	1.0k	5.0	40A	250	8.0m	150S	Si	M970c
207	S5A10	1.0k	5.0	50A	300	8.3m	175C	Si	A1ey
208	M5M5	1.0k	5.0	55A	300		175A	Si	A1ep
209	SDA168H	1.0k	5.0	55C	150		125	†	M1159
210	SPD9005	1.0k	5.0	55C	300 §		175J	Si	A52d
211	5D1000	1.0k	5.0	95C	350		175J	Si	A298an
212	1N3919	1.0k	5.0	100A	100		200J	Si	DO4
213	GPP5M	1.0k	5.0	100A	150	8.3m	175J	Si	u10d
214	ESP51000	1.0k	5.0	105C	200	8.3m	150C	Si	A3q
215	1N4459	1.0k	5.0	150B	150		175B	Si	DO4
216	550R10B	1.0k	5.5	25	250		175	Si	
217	6A10F1	1.0k	6.0		75			Si	DO10
218	6A10F	1.0k	6.0		150			Si	DO4
219	12SM6	1.0k	6.0		200			Si	A513
220	6A100#B	1.0k	6.0	25	400			Si	A1abm

SYMBOLS AND CODES EXPLAINED IN INTERPRETER

11. RECTIFIERS, HIGH VOLTAGE - PIV ≥ 1 kV (Cont'd)

IN ORDER OF: (1) PIV (2) IO MAX (3) @ TEMP & (4) TYPE NUMBER

LINE No.	4 TYPE NUMBER	1 PIV (V)	MAX AVG FWD DC CURRENT 2 Io MAX (A)	3 @ TEMP (°C)	MAX RATING SURGE CURR PEAK 1 Cy (A)	PULSE WIDTH (s)	MAX. TEMP (°C)	MAT	DRAWING NO.
1	600R10B	1.0k	6.0	25	250		175	Si	
2▼	GP610	1.0k	6.0	25	400	16m		Si	Aleg
3	R3401006	1.0k	6.0	40A	400	8.3m	175A	Si	A3at
4	6NC12	1.0k	6.0	50A	200		150J	Si	S19s
5	BRS607	1.0k	6.0	50A	125	8.3m	125	Si	C219a†
6	FR607	1.0k	6.0	50A	300		175A	Si	A1aak
7	M7M5	1.0k	6.0	50	400	8.3m	175	Si	A1ep
8	S6A10	1.0k	6.0	50A	300	8.3m	175C	Si	A1ey
9	6A10G	1.0k	6.0	55A	300		175A	Si	A1aba
10	FR607G	1.0k	6.0	55A	300		175A	Si	A1aba
11	ICC6407	1.0k	6.0	55A	400	8.3m	175	Si	A398j
12	NSS3541-10	1.0k	6.0	55C	75			Si	V216g
13	NSS3541-10F	1.0k	6.0	55C	75			Si	V216g
14	MR760	1.0k	6.0	60A	400		175	Si	
15	P600M	1.0k	6.0	60A	400			Si	A1eg
16	6A10#B	1.0k	6.0	75	400	8.0m	175	Si	A1eg
17	dc610	1.0k	6.0	80C	100		150A	Si	M1196
18	BY214-1000	1.0k	6.0	90A	400	10m	150J	Si	A318
19	6D1000	1.0k	6.0	95C	400		175J	Si	A298an
20	60S10	1.0k	6.0	95C	400 §	8.3m	175J	Si	A52m
21	100H3	1.0k	6.0	100A	240		175C	Si	S187c∅
22	M6-1000	1.0k	6.0	120C	130 §	10m	150S	Si	DO4∅
23	M6-1000R	1.0k	6.0	130A	130		150J	Si	DO4
24	MZ6-1000	1.0k	6.0	130A	130		150J	Si	DO4
25	MZ6-1000R	1.0k	6.0	130A	130		150J	Si	DO4
26	6NF11	1.0k	6.0	145C	150	10m	175J	Si	S187a
27	1N2280	1.0k	6.0	150C	400	8.3m	150C	Si	DO5
28	1N2560	1.0k	6.0	150C	150		150C	Si∆	DO10
29	1N2564	1.0k	6.0	150C	150		150C	Si∆	DO10
30	1N2575	1.0k	6.0	150C	150		150C	Si∆	DO10
31	1N3990	1.0k	6.0	150C	50		150	Si∆	DO4
32	6A1000	1.0k	6.0	150C	150		200J	Si∆	DO4
33	BY229-1000R	1.0k	7.0	100A	75	20u	150J	Si	TO220A
34	HSE7020-RT	1.0k	7.6	25	150	8.3m	175C	Si	DO4
35	GP80M	1.0k	8.0	25A	175	8.3m	150J	Si	Y220
36	RGP80M	1.0k	8.0	25A	150	8.3m	125J	Si	Y220
37	TG80	1.0k	8.0	25A	100		150J	Si	Y220AC
38	FR807	1.0k	8.0	50A	400		175A	Si	TO220A
39	S8-10	1.0k	8.0	50A	200	10m	150J	Si	S19m
40	BY329-1000	1.0k	8.0	108A	80	10m	150J	Si	TO220A
41	S30A100	1.0k	9.5	25A	250		150	Si	M1307
42	BYX39-1000	1.0k	9.5	85B	125 §	10m	175J	Si	DO4∅
43	1N2262	1.0k	10	25$	200		150	Si∆	DO4
44	1N2262A	1.0k	10	25$	200		150	Si∆	DO4
45	1N2263	1.0k	10	25$	200		150	Si∆	S35
46	1N2263A	1.0k	10	25C	200		150	Si∆	S35
47	BRS10-10	1.0k	10	55C	200	8.3m	125A	Si	C189c†
48	dc110	1.0k	10.0	80C	125		150A	Si	M1196
49	1N3924	1.0k	10	100C	100	8.3m	200C	Si	DO4
50	11R10S	1.0k	10	120C	200		175	Si∆	S103
51	S19J	1.0k%	10	124C	310	8.3m	150J	Si	S522
52	S20J	1.0k%	10	124C	280	10m	150J	Si	S522a
53	BYV96E	1.0k	10	125J	35	10m	165J	Si	A333C
54	S35A3100	1.0k	11.2	25A	250		150	Si	M1308
55	12A10F1	1.0k	12		150			Si	DO10
56	12A10F	1.0k	12		200			Si	DO4
57	12NC11	1.0k	12	50A	300		150J	Si	S19n
58	CTN1210	1.0k	12	50A	300		125A	Si	M594h *
59	CTP1210	1.0k	12	50A	300		125A	Si	M594h *
60	ST2-100	1.0k	12	50A	260		175C	Si	S187c∅
61	BRS12-10	1.0k	12	55C	300	8.3m	125A	Si	C189c†
62	1N3673	1.0k	12	100C	200		190A	Si	DO4
63	12F100	1.0k	12	100A	150 §	10m	190J	Si∆	DO4∅
64	1S1578	1.0k	12	120C	200		150J	Si	S19n
65	SR10A20	1.0k	12	120C	200 §	8.3m	150J	Si∆	S19t
66	BYW88-1000	1.0k	12	125C	230	10m	150J	Si	DO4
67	1N4510	1.0k	12	135C	240		175C	Si	DO4
68	12NF11	1.0k	12	138C	240	10m	175J	Si	S4k
69	1N2586	1.0k	12	150C	250		150C	Si	DO10
70	1N2597	1.0k	12	150C	250		150C	Si∆	DO10
71	1N2608	1.0k	12	150C	250		150C	Si∆	DO10
72	1N4015	1.0k	12	150C	200		175A	Si	DO4
73	12A1000	1.0k	12	150C	240		200J	Si∆	DO4
74	MR1130	1.0k	12	150C	300 §	8.3m	190J	Si∆	DO4
75	R3101012	1.0k	12	150C	250	5.0m	200J	∆	DO4
76	R3111012	1.0k	12	150C	250	5.0m	200J	∆	DO4
77	S50A100	1.0k	12.5	25A	375		150	Si	M1309
78	SKDD20/10	1.0k	12.7	70C	300		150J	Si	C238a
79	SKMD20/10	1.0k	12.7	70C	300		150J	Si	C238b
80	SKND20/10	1.0k	12.7	70C	300		150J	Si	C238c
81	12SM15	1.0k	15		300			Si	A513
82	15IP10	1.0k	15	55C	300	8.3m	150J	Si	M1021 *
83	BRS15-10	1.0k	15	55C	300	8.3m	125A	Si	C189c†
84	ISOPAC1203	1.0k	15	55C	150		175J	Si	M1265 *
85	ISOPACO103	1.0k	15	55C	150		175J	Si	M1260 *
86	ISOPACO203	1.0k	15	55C	150		175J	Si	M1261 *
87	ISOPACO403	1.0k	15	55C	150		175J	Si	M1262 *
88	ISOPACO603	1.0k	15	55C	150		175J	Si	M1264 *
89	SET010203	1.0k	15	55C	150		175J	Si	M1270 *
90	SET031003	1.0k	15	55C	150		175J	Si	M1266 *
91	6MA100	1.0k	15	71C	200	10m	150J	Si	S29d
92	CSB1510	1.0k	15.0	80C	250		150A	Si	M1017
93	6M100	1.0k	15	107B	200	10m	150A	Si	S4z
94	368Z	1.0k	15	125C	240		180J	Si	DO4
95	TG280	1.0k	16	25A	100		150J	Si	Y220AB
96	16F100	1.0k	16	100B	350	10m	190	Si	DO4
97	M16-1000	1.0k	16	120C	230 §	10m	175S	Si	DO4∅
98	S20100	1.0k	16	126C	200	8.3m	190J	Si∆	S488∅
99	M16-1000R	1.0k	16	135A	230		175J	Si	DO4
100	MZ16-1000	1.0k	16	135C	230		175J	Si	DO4
101	MZ16-1000R	1.0k	16	135C	230		175J	Si	DO4
102	1N3624	1.0k	16	150C	300	8.3m	200C	Si	DO4
103	R3101016	1.0k	16	150C	300	5.0m	200J	∆	DO4
104	R3111016	1.0k	16	150C	300	5.0m	200J	∆	DO4
105	SSCDA10	1.0k	17	55C	150		150A	Si	M1245
106	FC14E	1.0k	17	85C	300		125J	Si	M1288a
107	SW10PCN012	1.0k	17	100C	210 §	10m	150J	Si	DO4∅
108	20A10F	1.0k	20		250			Si	DO5
109	PR5407	1.0k	20		100	10m		Si	A344ac
110	S20-10	1.0k	20	50A	600	10m	150J	Si	S19p
111	NCR20-1000	1.0k	20	55C	240			Si	M1024
112	SSIE2060	1.0k	20	85C	250	10m	160J	Si∆	S4p∆
113	Q19J	1.0k%	20	100C	440	8.3m	150J	Si	S522
114	Q20J	1.0k%	20	100C	400	10m	150J	Si	S522a
115	SKR1M20/10	1.0k	20	108C	320	10m	150J	Si	DO4
116	21R10S	1.0k	20	120C	400		175	Si∆	S102
117	BYX25-1000	1.0k	20	125B	360 §	10m	175J	Si	DO4∅
118	1N2287	1.0k	20	150C	400	8.3m	150C	Si	DO5
119	MR2010S	1.0k	20	150C	400		175J	Si∆	DO4
120	RN1120	1.0k	20	150C	250	10m	175J	Si	DO5
121	HSE8070-RT	1.0k	22	25	350	8.3m	175C	Si	DO5
122	S21100	1.0k	22	131C	250	8.3m	190J	Si∆	S488∅
123	BYW25-1000	1.0k	23	125A	550	10m	150J	Si	D05
124	12SM25	1.0k	25		400			Si	A514
125♦	SR2510	1.0k	25					Si	D05
126	25NC12	1.0k	25	50A	600		150J	Si	S19n
127	BRS25-10(M)	1.0k	25	55C	300	8.3m	125A	Si	C189†
128	A139P	1.0k	25	75	400	8.3m	125	Si	DO5
129	CSB2510	1.0k	25.0	80C	400		150A	Si	M1017
130	J527-10A	1.0k	25	100C	300	8.3m	175C	Si	M947a*
131	J527-10C	1.0k	25	100C	300	8.3m	175C	Si	M947b*
132	J527-10D	1.0k	25	100C	300	8.3m	175C	Si	M947*
133	MR331	1.0k	25	100C	300	8.3m	175J	Si	DO21
134	TJ132-10A	1.0k	25	100C	300	8.3m	175A	Si	C199a
135	TJ132-10C	1.0k	25	100C	300	8.3m	175A	Si	C199
136	TJ132-10D	1.0k	25	100C	300	8.3m	175A	Si	C199b
137	A25P	1.0k	25	120C	300		175J	Si	DO4
138	M25-1000	1.0k	25	120A	300		175J	Si	S436
139	M25-1000R	1.0k	25	120A	300		175J	Si	S436
140	25NF11	1.0k	25	140C	500	10m	175J	Si	S4k
141	S25A10	1.0k	25	145C	400		175	Si	DO5
142	AR25M	1.0k	25	150A	400		175	Si	M778a
143	ARS25M	1.0k	25	150C	400		175	Si	M778b
144	MR2510	1.0k	25	150C	400	8.3m	175J	Si∆	M867
145	MR2510M	1.0k	25	150C	400	8.3m	175J	Si∆	M867a
146	RA2510	1.0k	25	150A	400		175A	Si	M778a
147	SV1000	1.0k	25	150C	300	8.3m	175	Si	DO21
148	30A10F	1.0k	30		300			Si	DO5
149♦	BYX96-1000	1.0k	30					Si	D04
150	GM30M	1.0k	30	25A	300	8.3m	150J	Si	TO3
151	RGM30M	1.0k	30	25A	200	8.3m	125J	Si	TO3
152	VBO13-10N01	1.0k	30	30C	220	10m	150J	Si	
153	PBC100	1.0k	30	55C	300		150C	Si	M447∅
154	SET030603	1.0k	30	55C	150		175J	Si	M1266 *
155	SET030803	1.0k	30	55C	150		175J	Si	M1266 *
156	SET040203	1.0k	30	55C	250		175J	Si	M1271 *
157	SET061203	1.0k	30	55C	150		175J	Si	M1267 *
158	P19J	1.0k%	30	95C	840	8.3	150J	Si	S520
159	P20J	1.0k%	30	95C	760	10m	150J	Si	S520a
160	SA10PCN020	1.0k	30	115C	245	10m	175J	Si	DO4
161	SW10PCN020	1.0k	30	115C	245		175J	Si	DO4∅
162	F3P3	1.0k	30	124C	300		190C	Si	DO5
163	SA10PCN030	1.0k	30	125C	350	10m	175J	Si	DO4
164	SW10PCN030	1.0k	30	125C	350 §	10m	175J	Si	DO4∅
165	B70H100	1.0k	32	50C	1.5k			Si	M1276
166	DD22S1000	1.0k	32	64C	390	10m	150J	Si	20
167	BRS35-10	1.0k	35	55C	400	8.3m	125A	Si	C189†
168	T483E	1.0k	35	75C	500	8.3m	125J	Si	M1332c
169	CSB3510	1.0k	35.0	80C	400		150A	Si	M1017
170	1N4529	1.0k	35	115C	500		175C	Si	DO5
171	F4P3	1.0k	37	123C	600		190C	Si	DO5
172	DD31S1000	1.0k	38	82C	470	10m	150J	Si	20
173	12SM40	1.0k	40		500			Si	A514
174♦	SR4010	1.0k	40					Si	D05
175	VBO20-10N01	1.0k	40	55C	300	10m	150J	Si	
176	DRA410	1.0k	40	100C	800 §	10m	150J	Si	C259
177	RP1140	1.0k	40	100C	700	10m	150J	Si	DO5
178	10M100	1.0k	40	104B	800	10m	130A	Si	S4s
179	10MA100	1.0k	40	104C	800	10m	130J	Si	S527a
180	MZ41-1000	1.0k	40	115C	400		150J	Si	DO5
181	MZ41-1000R	1.0k	40	115C	400		150J	Si	DO5
182	PH40-1000	1.0k	40	118A	400	10m	150J	Si	DO5∅
183	M41-1000	1.0k	40	120C	400 §	10m	165S	Si	S437∅
184	S40A10	1.0k	40	125C	500	8.3m	175A	Si	DO5
185	40HF100	1.0k	40	140C	500 §	8.3m	180J	Si∆	DO5∅
186▼	SD040N10P	1.0k	40	146C	600	10m	180J	Si	DO5
187▼	SD040R10P	1.0k	40	146C	600	10m	180J	Si	DO5
188▼	SD041N10P	1.0k	40	146C	600	10m	180J	Si	S567a
189	R4101040	1.0k	40	150C	800		200J	Si	DO5∅
190	SA10PCN051	1.0k	42	100C	600 §	10m	150J	Si∆	DO5∅
191	PR346-RT	1.0k	44.6		1.2k			Si	DO5
192	SET111403	1.0k	45	55C	150		175J	Si	M1269 *
193	F5P3	1.0k	45	122C	700		190C	Si	DO5
194	S34100	1.0k	45	122C	700	8.3m	190J	Si∆	S488b∅
195	BYX56-1000	1.0k	48	112B	800	10m	175J	Si	DO5∅
196	SCNAR10	1.0k	50		300		150	Si	M977
197	SCPAR10	1.0k	50		300		150	Si	M977
198	SCSDMOL	1.0k	50	55C	750		175J	Si	M493
199	SCSNMOL	1.0k	50	55C	750		175J	Si	M493
200	SCSPMOL	1.0k	50	55C	750		175J	Si	M493
201	N03J	1.0k%	50	60C	940	8.3m	150J	Si	S519
202	N04J	1.0k%	50	60C	850	10m	150J	Si	S519a
203	SCDAR10	1.0k	50	75C	300		150	Si	M977
204	T481E	1.0k	50	75B	800	8.3m	125A	Si	M1332a
205	T484E	1.0k	50	75C	500	8.3m	125J	Si	M1332d
206	T485E	1.0k	50	75C	500	8.3m	125J	Si	M1332e
207	SKR1M40/10	1.0k	50	97C	700	10m	150J	Si	DO5
208	50NF11	1.0k	50	135C	1.5k	10m	175J	Si	S168b
209	1N1691	1.0k	50	150C	700	8.3m	165C	Si	S8q
210	12SM55	1.0k	55		1.0k			Si	A515
211	IRKD56-10	1.0k	55	25J	1.6k		150J	Si	M1188a*
212	IRKE56-10	1.0k	55	25J	1.6k		150J	Si	M1188b
213♦	SR6010	1.0k	60					Si	D05
214	600HT10U	1.0k	60	70C	500			Si	M1275
215	SA10PCN061	1.0k	60	100C	1.0k§	10m	150J	Si∆	DO5∅
216	20MA100	1.0k	60	108C	950	10m	150J	Si	S527a
217	60HF100	1.0k	60	115C	670	6.0m	175J	Si	DO5
218	R4041060	1.0k	60	125C	1.0k		200C	Si	DO5∅
219	20M100	1.0k	60	126B	1.0k	10m	175A	Si	S4t
220	60NC15	1.0k	60	126C	550	10m	175J	Si	S4t

SYMBOLS AND CODES EXPLAINED IN INTERPRETER

11. RECTIFIERS, HIGH VOLTAGE - PIV ≥ 1 kV (Cont'd)

IN ORDER OF: (1) PIV (2) IO MAX (3) @ TEMP & (4) TYPE NUMBER

LINE No.	4 TYPE NUMBER	1 PIV (V)	MAX AVG FWD DC CURRENT 2 Io MAX (A)	3 @ TEMP (°C)	MAX RATING SURGE CURR PEAK 1 Cy (A)	PULSE WIDTH (s)	MAX. TEMP (°C)	MAT	DRAWING NO.
1	R4141060	1.0k	60	140C	900	5.0m	200J	Δ	DO5
2	M41-1000R	1.0k	63	115C	400		150J	Si	DO5
3	12SM70	1.0k	70		1.2k			Si	A515
4♦	SR7010	1.0k	70					Si	D05
5	IRKD71-10	1.0k	70	25J	1.7k		150J	Si	M1188a*
6	IRKE71-10	1.0k	70	25J	1.7k		150J	Si	M1188b
7	A77P	1.0k	70	100C	750		150J	Si	DO5
8	PH70-1000	1.0k	70	100A	1.0k	10m	150J	Si	DO5Ø
9	SW10PCN040	1.0k	70	100C	650 §	10m	175J	Si	DO5Ø
10	SA10PCN040	1.0k	70	110C	650	10m	175J	Si	DO4
11	A72P	1.0k	70	120C	1.0k		150J	Si	DO5
12	M71-1000	1.0k	70	120A	1.0k		150J	Si	DO5
13	M71-1000R	1.0k	70	120A	1.0k		150J	Si	DO5
14	MZ71-1000	1.0k	70	120C	1.0k		150J	Si	DO5
15	MZ71-1000R	1.0k	70	120C	1.0k		150J	Si	DO5
16	R4041070	1.0k	70	125C	1.2k		200C	Si	DO5Ø
17	S306100F	1.0k	70	125C	1.2k		190J	Si	DO5Ø
18	F6P3	1.0k	70	138C	1.2k		190C	Si	DO5
19	S36100	1.0k	70	138C	1.2k	8.3m	190J	SiΔ	S488bØ
20	70HFR100	1.0k	70	140C	1.2k		140C	Si	DO5
21	R4141070	1.0k	70	140C	1.2k	5.0m	190J	Δ	DO5
22▼	SD070N10P	1.0k	70	140C	1.1k	10m	180J	Si	DO5
23▼	SD070R10P	1.0k	70	140C	1.1k	10m	180J	Si	DO5
24♦	SD071N10P	1.0k	70	140C	1.1k	10m	180J	Si	S481
25♦	SD071R10P	1.0k	70	140C	1.1k	10m	180J	Si	S481
26	SA10PCN055	1.0k	75	110C	900	10m	175J	Si	DO5
27	SW10PCN055	1.0k	75	110C	900 §	10m	175J	Si	DO5Ø
28	SA10PCN075	1.0k	75	135C	1.3k	10m	175J	Si	DO5
29	SW10PCN075	1.0k	75	135C	1.3k§	10m	175	Si	DO5Ø
30	DFS80A10	1.0k	80	93C	1.6k	10m	150J	Si	M567Ø
31	85HFL100S05	1.0k	85	75C	1.1k	10m	125J	Si	DO5
32	85HFL100S10	1.0k	85	75C	1.1k	10m	125J	Si	DO5
33	70H100A	1.0k	85	115C	1.5k§	8.3m	200J	Si*	DO5Ø
34	F7P3	1.0k	85	132C	1.5k		190C	Si	DO5
35	S37100	1.0k	85	132C	1.5k	8.3m	190J	SiΔ	S488bØ
36	85HF100	1.0k	85	140C	1.4k	6.0m	180J	Si	DO5
37	85HFR100	1.0k	85	140C	1.8k		140C	Si	DO5
38	IRKD91-10	1.0k	90	25J	2.2k		150J	Si	M1188a*
39	IRKE91-10	1.0k	90	25J	2.2k		150J	Si	M1188b
40▼	SD090N10P	1.0k	90	135C	1.5k	10m	180J	Si	DO5
41▼	SD090R10P	1.0k	90	135C	1.5k	10m	180J	Si	D05
42▼	SD091N10P	1.0k	90	135C	1.5k	10m	180J	Si	S481
43▼	SD091R10P	1.0k	90	135C	1.5k	10m	180J	Si	S481
44	12SM100	1.0k	100		3.0k			Si	M986
45	R5021010RSWA	1.0k	100		2.2k	5.0m	150J	Si	DO8Ø
46	S100-10	1.0k	100	50A	2.6k	10m	150J	Si	S491
47	101KL100S10	1.0k	100	60C	3.0k		125J	SiΔ	DO8
48	101KLR100S10	1.0k	100	70	3.0k		125J	SiΔ	DO8
49	ES481E	1.0k	100	75B	1.0k	8.3m	125J	Si	M1331a
50	ES482E	1.0k	100	75B	1.0k	8.3m	125J	Si	M1331b
51	ES483E	1.0k	100	75B	1.0k	8.3m	125J	Si	M1331c
52	ES484E	1.0k	100	75B	1.0k	8.3m	175J	Si	M1131d
53	ES485E	1.0k	100	75B	1.0k	8.3m	175J	Si	M1131e
54	ES581E	1.0k	100	75B	1.0k	8.3m	175J	Si	M1131a
55	ES582E	1.0k	100	75B	1.0k	8.3m	175J	Si	M1131b
56	ES583E	1.0k	100	75B	2.0k	8.3m	175J	Si	M1131c
57	ES584E	1.0k	100	75B	2.0k	8.3m	175J	Si	M1131d
58	ES585E	1.0k	100	75B	2.0k	8.3m	175J	Si	M1131e
59	T482E	1.0k	100	75B	800	8.3m	125A	Si	M1332b
60	DSS100A10	1.0k	100	90C	2.0k	10m	150J	Si	S567Ø
61	L08J	1.0k%	100	90C	2.0k	10m	150J	Si	S518
62	101KL100S25	1.0k	100	100C	3.0k		175J	SiΔ	DO8
63	A177P	1.0k	100	100C	2.5k	8.3m	175J	SiΔ	S120j
64	KU1010	1.0k	100	100C	1.8k	10m	150J	Si	S421
65	KU1510	1.0k	100	100C	2.5k	10m	150J	Si	S421
66	SKN2M100/10	1.0k	100	100C	1.5k	10m	150J	Si	DO30
67	SKR2M100/10	1.0k	100	100C	1.5k	10m	150J	Si	DO30
68	L07J	1.0k%	100	104	2.0k	10m	125J	Si	S518
69	101F10S	1.0k	100	105C	1.6k	10m	175J	Si	S503Ø
70	SR100AM20	1.0k	100	110C	3.0k	8.3m	150J	Si	S435b
71	101KLR100S15	1.0k	100	120	3.0k		175J	SiΔ	DO8
72	101KLR100S20	1.0k	100	120	3.0k		175J	SiΔ	DO8
73	101KLR100S25	1.0k	100	120	3.0k		175J	SiΔ	DO8
74	101KLR100S30	1.0k	100	120	3.0k		175J	SiΔ	DO8
75	1N3295	1.0k	100	130C	1.6k	8.3m	200C	Si	DO8
76	1N3295A	1.0k	100	130C	2.3k		200C	Si	DO8
77	1N3295R	1.0k	100	130B	1.6k		200A	Si	DO8
78	A170P	1.0k	100	130C	2.5k	8.3m	200J	SiΔ	S120jØ
79	R5D01010WC	1.0k	100	130C	2.3k	8.3m	200J	Si	DO30Ø
80	DRB100-10R	1.0k	100	150J	1.8k	10m	150J	Si#	C264
81	DRBT100-10R	1.0k	100	150J	1.8k	10m	150J	Si#	C265
82	S42100	1.0k	125	130C	1.8k	8.3m	190J	SiΔ	DO8Ø
83	S42100TS	1.0k	125	130C	1.8k	8.3m	190J	SiΔ	S464
84	KU1310	1.0k	130	100C	2.3k	10m	150J	Si	S421
85	12SM150	1.0k	150		3.6k			Si	M986
86	A187P	1.0k	150	50C	2.8k	8.3m	125J	SiΔ	S120jØ
87	45MA100	1.0k	150	76C	1.7k	10m	150J	Si	S435g
88	BYX32-1000	1.0k	150	100A	1.6k	10m	190J	SiΔ	S203bØ
89	1N4594	1.0k	150	110	3.0k		200A	Si	DO8Ø
90	R5D01015WA	1.0k	150	110C	3.0k	8.3m	200J	Si	DO30Ø
91	150ND13	1.0k	150	114C	4.5k	10m	150J	Si	S529
92	M151-1000	1.0k	150	115C	3.5k§	10m	175C	Si	S468Ø
93	45M100	1.0k	150	116B	3.0k	10m	175A	Si	S427
94	150NC15	1.0k	150	117C	1.6k	10m	175J	Si	S427
95	G6P3	1.0k	150	125C	2.1k	8.3m	190C	Si	DO8
96	S43100	1.0k	150	125C	2.1k	8.3m	190J	SiΔ	DO8Ø
97	S43100TS	1.0k	150	125C	2.1k	8.3m	190J	SiΔ	S464
98▼	SD150N10M	1.0k	150	125C	3.6k	10m	180J	Si	S569
99▼	SD150N10P	1.0k	150	125C	3.6k	10m	180J	Si	S569
100▼	SD150R10M	1.0k	150	125C	3.6k	10m	180J	Si	S569
101▼	SD150R10P	1.0k	150	125C	3.6k	10m	180J	Si	S569
102	SW10PHN151	1.0k	150	125C	3.2k	10m	180J	Si	S435j
103	M151-1000R	1.0k	150	140A	4.5k		175J	Si	S468
104	A180P	1.0k	150	143C	3.4k	8.3m	200J	SiΔ	S120jØ
105	1N3092	1.0k	150	150C	3.0k§	8.3m	200C	Si	DO30
106	150K100A	1.0k	150	150C	3.0k§	8.3m	200J	Si*	DO8Ø
107	150KS100	1.0k	150	150C	2.8k	6.0m	200J	Si	S550
108	150L100A	1.0k	150	150C	3.0k§	8.3m	200J	Si*	DO30Ø
109	152K100A	1.0k	150	150C	2.8	6.0m	200J	Si	S548
110	152L100A	1.0k	150	150C	2.8k	6.0m	200J	Si	S548a
111	154K100A	1.0k	150	150C	2.8k	6.0m	200J	Si	S549
112	154L100A	1.0k	150	150C	2.8k	6.0m	200J	Si	S549a
113	ST16-100	1.0k	150	150C	3.0k	4.0m	200C	Si	S128bØ
114	1N3273	1.0k	160	125C	2.0k		190J	Si	DO9Ø
115	H6P3	1.0k	160	126C	2.5k	8.3m	190C	Si	DO9
116	DS175-10L	1.0k	182	100C	2.8k§	10m	150J	Si	S506dØ
117	12SM200	1.0k	200		4.5k			Si	M986
118	IRKD200-10	1.0k	200	25J	9.0k		125J	Si	M1274 *
119	IRKD240-10	1.0k	200	25J	10k		125J	Si	M1274c*
120	IRKE200-10	1.0k	200	25J	9.0k		125J	Si	M1274a
121	IRKE240-10	1.0k	200	25J	10k		125J	Si	M1274b
122	S200-10	1.0k	200	50A	4.0k	10m	150J	Si	S480
123	J11J	1.0k%	200	55	2.0k	10m	125J	Si	C248b
124	SV2010	1.0k	200	100C	4.0k	10m	150J	Si	DO8
125▼	SD200N10M	1.0k	200	110C	4.7k	10m	180J	Si	S569
126▼	SD200N10P	1.0k	200	110C	4.7k	10m	180J	Si	S569
127▼	SD200R10M	1.0k	200	110C	4.7k	10m	180J	Si	S569
128▼	SD200R10P	1.0k	200	110C	4.7k	10m	180J	Si	S569
129	SW10PHN201	1.0k	200	110C	4.2k	10m	180J	Si	S435j
130	S20N1100JA	1.0k	210	100C	4.5k§	10m	150J	SiΔ	M378
131	S20P1100JA	1.0k	210	100C	4.0k§	10m	175J	SiΔ	M378
132	R6021022PSYA	1.0k	220	150J	3.5k	5.0m	150J	Si	DO9Ø
133	SKN2M240/10	1.0k	240	96C	4.7k	10m	150J	Si	DO9
134	SKR2M240/10	1.0k	240	96C	4.7k	10m	150J	Si	DO9
135	1N3174	1.0k	240	105C	3.0k	8.3m	175C	Si	DO9
136	FD250DM20	1.0k	240	105C	5.0k§	8.3m	150J	SiΔ	C248a
137	SR200DL20R	1.0k	240	113C	5.0k	8.3m	175J	SiΔ	S435c
138	SR200DL-20S	1.0k	240	113C	5.0k§	8.3m	175J	SiΔ	S435
139	1N3174A	1.0k*	240	120C	3.0k		190J	Si	S14e
140	251F10S	1.0k	250	50C	4.5k		175J	SiΔ	S12n
141	DFS250A10	1.0k	250	54C	5.0k	10m	125J	Si	M568Ø
142	253PJA100	1.0k	250	73C	2.7k	10m	150J	Si	M1246
143	70MA100	1.0k	250	74C	4.0k	10m	150J	Si	S12r
144	250NC15	1.0k	250	107C	2.0k	10m	175J	Si	S8n
145	A197P	1.0k	250	110C	5.0k	8.3m	175J	SiΔ	S435aØ
146	1S2256	1.0k	250	111C	5.0k§	8.3m	150J	SiΔ	C240
147	J5P3	1.0k	250	122C	4.5k	8.3m	190C	Si	DO9
148	S53100	1.0k	250	122C	4.5k	8.3m	190J	SiΔ	DO9Ø
149	S53100TS	1.0k	250	122C	4.5k	8.3m	190J	SiΔ	S464a
150	DF451-10	1.0k	250	125J	3.5k	10m	125J	Si#	M771
151	1N3742	1.0k	250	130C	4.5k	8.3m	200C	Si	DO9Ø
152	1N2068	1.0k	250	135C	4.5k§	8.3m	200C	Si	DO9
153	A190P	1.0k	250	144C	6.5k	8.3m	200J	SiΔ	S435aØ
154	70U100	1.0k	250	150C	5.5k	10m	200J	Si	DO9Ø
155	DF252-10	1.0k	270	150J	3.0k	10m	150J	Si#	M771
156	A399P	1.0k	275	80C	6.0k		150J	Si	M1147
157	1N4056	1.0k	275	120C	5.0k		190J	Si	DO9Ø
158	H01L	1.0k	300	78C	5.5k	10m	150J	Si	S516
159	DSS300A10	1.0k	300	79C	6.0k	10m	150J	Si	S568Ø
160	TV3010	1.0k	300	110C	6.0k	10m	180J	Si	DO9
161	300U100A	1.0k	300	120C	5.0k§	8.3m	200J	Si*	DO9Ø
162	301U100	1.0k	300	120C	6.2k	8.3m	200J	Si	DO9Ø
163	302U100A	1.0k	300	120C	5.0k	8.3m	200C	Si	DO9
164	303U100	1.0k	300	120C	5.9k	6.0m	200J	Si	S551
165	309U100	1.0k	300	120C	5.9k	6.0m	200J	Si	S467
166	S504100	1.0k	300	132C	5.0k	8.3m	190J	SiΔ	DO9Ø
167	S504100TS	1.0k	300	132C	5.0k	8.3m	190J	SiΔ	S464a
168	R620103000	1.0k	300	142C	5.5k	8.3m	190J	Si	C242
169	R6221030PS00	1.0k	300	150J	3.5k	5.0m	150	Si	C242
170	S30N1100JA4	1.0k	320	100C	4.5k§	10m	175J	SiΔ	M378
171	ST20-100	1.0k	350	25A	7.0k		175J	Si	S203cØ
172	300ND13	1.0k	350	82C	6.5k	10m	150J	Si	S531
173	DN262-10	1.0k	360	175J	4.0k	10m	175J	Si#	M771
174▼	SD300R10M	1.0k	380	100C	6.0k	10m	180J	Si	S506c
175▼	SD300R10P	1.0k	380	100C	6.0k	10m	180J	Si	S506c
176	SW10PHN300	1.0k	380	100C	5.5k§	10m	180J	Si	DO5Ø
177	SW12HHN300	1.0k	380	100C	55k§	10m	180J	Si	M1155Ø
178	403PJA100	1.0k	400	76C	4.0k	10m	150J	Si	M1246a
179	FD400DL20	1.0k	400	98C	10k§	8.3m	150J	SiΔ	C248zc
180	A397P	1.0k	400	110	5.0k	8.3m	175	SiΔ	M771
181	NLA397P	1.0k	400	110C	5.0k	8.3m	125J	Si	C242a
182▼	SD400N10M	1.0k	400	120C	8.2k	10m	190J	Si	S506c
183▼	SD400N10P	1.0k	400	120C	8.2k	10m	190J	Si	S506c
184▼	SD400R10M	1.0k	400	120C	8.2k	10m	190J	Si	S506c
185▼	SD400R10P	1.0k	400	120C	8.2k	10m	190J	Si	S506c
186	SW10HHN400	1.0k	400	120C	7.5k§	10m	190J	Si	M1155Ø
187	SW10PHN400	1.0k	400	120C	7.5k§	10m	190J	Si	M1155Ø
188	R620104000	1.0k	400	128C	6.0k	8.3m	190J	Si	C242
189	SR400EL-20	1.0k	400	128C	10k§	8.3m	175J	SiΔ	S502
190	A390P	1.0k	400	145	7.0k	8.3m	200J	SiΔ	M771
191	NLA390P	1.0k	400	145C	7.0k		200J	Si	C242a
192	DF452-10	1.0k	400	150J	5.0k	10m	150J	Si#	M771
193	DS430-10J	1.0k	430	100C	8.4k		150J	Si	S506b
194	FD600-10	1.0k	430	150J	5.5k	8.3m	190J	Si	M637a
195	DS402ST10	1.0k	500	55C	4.5k§	10m	175C	Si	C248
196	501V100	1.0k	500	105C	7.5k§	8.3m	200J	SiΔ	S120gØ
197	501VF100B	1.0k	500	105C	10k	8.3m	200J	Si	S525
198	R620105000	1.0k	500	112C	6.5k	8.3m	190J	Si	C242
199	501V100B	1.0k	500	120C	10k§	8.3m	200J	SiΔ	S120gØ
200	503V100	1.0k	500	120C	10k		200J	Si	S563
201	503V100B	1.0k	500	120C	10k		200J	Si	S563
202	503V120B	1.0k	500	120C	10k		200J	Si	S563
203	503V140B	1.0k	500	120C	10k		200J	Si	S563
204	70M100	1.0k	500	129B	9.0k	10m	175A	Si	S8n
205	701F10S	1.0k	500	130	9.0k		175J	SiΔ	S12b
206	501VR100B	1.0k	500	135C	10k§	8.3m	200J	SiΔ	S120gØ
207	DN462-10	1.0k	540	175J	6.0k	10m	175J	Si#	M771
208	AR402P10	1.0k	575	55H	4.5k§	10m	175J	SiΔ	M1136§%
209	AR402S10	1.0k	575	55H	4.5k§	10m	175J	SiΔ	M1136♦%
210	FD500E20	1.0k	600	90C	10k§	8.3m	150J	SiΔ	C240d
211	1S2250	1.0k	600	93C	10k§	8.3m	150J	SiΔ	C240b
212	S904SXU10	1.0k	600	100C	9.0k§	10m	175J	Si	M759Ø
213	R720100600	1.0k	600	136C	7.0k	8.3m	200J	Si	C246f
214	DF652-10	1.0k	600	150J	9.0k	10m	150J	Si#	M1337
215	GD800-10	1.0k	640	150J	8.0k	8.3m	150J	Si	M637
216▼	SD300C10C	1.0k	650	55	6.0k	10m	180J	Si	DO200AA
217	S954SXU10	1.0k	680	100C	9.0k§	10m	175J	Si	M759Ø
218	703PJA100	1.0k	700	83C	9.0k	10m	150J	Si	M1246b
219	250MA100	1.0k	700	101C	9.0k	10m	175J	Si	S12s
220	A437P	1.0k	750	65	10k	8.3m	175C	SiΔ	C246b

SYMBOLS AND CODES EXPLAINED IN INTERPRETER

11. RECTIFIERS, HIGH VOLTAGE - PIV ≥ 1 kV (Cont'd)

IN ORDER OF: (1) PIV (2) IO MAX (3) @ TEMP & (4) TYPE NUMBER

LINE No.	4 TYPE NUMBER	1 PIV (V)	MAX AVG FWD DC CURRENT 2 Io MAX (A)	3 @ TEMP (°C)	MAX RATING SURGE CURR PEAK 1 Cy (A)	PULSE WIDTH (s)	MAX. TEMP (°C)	MAT	DRAWING NO.
1	A596P	1.0k	750	70	10k	8.3m	130	Si	M463
2▼	SD400C10C	1.0k	800	55	8.2k	10m	190J	Si	DO200AA
3	SW10KBN805	1.0k	800	100H	15k§	10m	175J	Si	M747⊠
4	SW10KBR805	1.0k	800	100H	17k	10m	175J	Si	S435j
5	FD1000A20	1.0k	800	101C	14k§	8.3m	150J	SiΔ	C239a
6	DN662-10	1.0k	800	175J	12k	10m	175J	Si#	M1337
7	FD900-10	1.0k	800	190J	6.0k	8.3m	190J	Si	M637a
8	851PDE100L25	1.0k	850	75C	9.5k		150J	Si	M1277
9	851PDE100L30	1.0k	850	75C	9.5k		150J	Si	M1277
10	851PDE100L20	1.0k	850	78C	9.5k		150J	Si	M1277
11	S1104SXU10	1.0k	850	100C	16k§	10m	175J	Si	M759⊠
12	A620CT	1.0k	900	65	9.5k		150J	Si	C246b
13	R720100900	1.0k	900	110C	8.5k	8.3m	200J	Si	C246f
14	SW10KBR935	1.0k	935	100H	19k	10m	175J	Si	S435j
15	SW10KBN935	1.0k	936	100H	19k§	10m	175J	Si	M747⊠
16	DS804SE10	1.0k	1.0k	55H	9.0k		175J	Si	C248
17	S951SXU10	1.0k	1.0k	85C	16k§	10m	175J	Si	M759⊠
18	801PDB100B	1.0k	1.0k	96C	10k§	8.3m	200J	Si	E200b
19	A430P	1.0k	1.0k	113C	10k	8.3m	200J	SiΔ	C246b
20	NLA430P	1.0k	1.0k	113C	10k	8.3m	200J	Si	C246b
21	DN762-10	1.0k	1.1k	175J	15k	10m	175J	Si#	M1337
22	DS904SM10	1.0k	1.11k	55C	9.0k§	10m	200S	SiΔ	C245b
23	AR904P10	1.0k	1150	55H	9.0k§	10m	175J	SiΔ	M1005§%
24	AR904S10	1.0k	1150	55H	9.0k§	10m	175J	SiΔ	M1005♦%
25	GD1400-10	1.0k	1.15k	190J	8.0k	8.3m	190J	Si	M637
26	S1101SXU10	1.0k	1.2k	80C	25k§	10m	175J	Si	M759⊠
27	R720101200	1.0k	1.2k	107C	12k	8.3m	200J	Si	C246f
28	A330P	1.0k	1.2k	112C	11k		200J	SiΔ	M1147
29	1201PDE100	1.0k	1.2k	115C	13k		200J	SiΔ	M1277
30	HD1500-10	1.0k	1.2k	150J	18k	8.3m	150J	Si	M637c
31	R9G0101300	1.0k	1.3k	140C	16k	8.3m	190J	Si	C246e
32	A440P	1.0k	1.5k	115C	21k		200J	SiΔ	C245e
33	AR1104P10	1.0k	1550	55H	175 §	10m	175J	SiΔ	M1005§%
34	AR1104S10	1.0k	1550	55H	175k§	10m	175J	SiΔ	M1005♦%
35	DS1104SM10	1.0k	1.55k	55C	16k§	10m	200S	SiΔ	M757
36	FD1600A20	1.0k	1.6k	91C	35k§	8.3m	150J	SiΔ	C244a
37	HD2100-10	1.0k	1.7k	150J	22k	8.3m	150J	Si	M637c
38	JD2300-10	1.0k	1.7k	150J	35k	8.3m	150J	Si	M946
39	A730P	1.0k	1.8k	100C	25k		175J	Si	M1148
40	R9G0101800	1.0k	1.8k	115C	21k	8.3m	175J	Si	C246e
41	DN961-10	1.0k	1.9k	175J	27k	10m	175J	Si	C2460
42	DS1101SM10	1.0k	2.0k	55C	25k§	10m	200S	SiΔ	M757
43	DS2004SN10	1.0k	2.0k	55C	25k§	10m	180S	SiΔ	M954
44	A621P	1.0k	2.0k	65C	25k		175J	Si	C246b
45	2001PDK100	1.0k	2.0k	105C	30 §	8.3m	200J	SiΔ	C245a
46	HD2500-10	1.0k	2.16k	190J	22k	8.3m	190J	Si	M637c
47	R9G0102200	1.0k	2.2k	120C	30k	8.3m	150J	Si	C246e
48	AR2004P10	1.0k	2250	55H	25k§	10m	175J	SiΔ	M1006§%
49	AR2004S10	1.0k	2250	55H	25k§	10m	175J	SiΔ	M1006♦%
50	A740P	1.0k	2.4k	100C	32k		175J	Si	M1148
51	JD3000-10	1.0k	2.4k	150J	45k	8.3m	150J	Si	M946
52	DS2002SN10	1.0k	2.8k	55H	33k	10m	175J	SiΔ	M954
53	3001PDN100	1.0k	3.0k	108C	50k§	8.3m	200J	SiΔ	C1001a⊠
54	JD4000-10	1.0k	3.0k	150J	50k	8.3m	150J	Si	M946
55	JD4500-10	1.0k	3.4k	150J	50k	8.3m	150J	Si	
56	RA201036XX00	1.0k	3.6k		40k		190J	Si	C246n
57	4001PDR100	1.0k	4.0k	105C	84k		175J	Si	C246o
58	AR1101P10	1.0k	5.0k	55H	25k§	10m	175J	SiΔ	M1005§%
59	AR1101S10	1.0k	5.0k	55H	25k§	10m	175J	SiΔ	M1005♦%
60	SSiN4260	1.1k			9.4k		180J	Si	C247
61	10R11B	1.1k	.10	25	60		175	Si	
62	1N2327	1.1k	.40	25	4.0		150A	SiΔ	A154
63	1N2776	1.1k	.75	25A	15		165S	Si	A145
64	75R11B	1.1k	.75	25	60		175	Si	
65	100R11B	1.1k	1.0	25	60		175	Si	
66	GP10N	1.1k	1.0	55A	25		175	Si	DO41
67	ER442	1.1k	1.0	100	50		175	Si	DO41
68	SSiB9860A	1.1k	1.2	45A		10m	150J	SiΔ	M571a
69	MR-1C	1.1k	1.2	50A	100	10m	140J	SiΔ	A284a
70	150R11B	1.1k	1.5	25	60		175	Si	
71	SSiC9960A	1.1k	1.7	45A		10m	150J	SiΔ	M571
72	200R11B	1.1k	2.0	25	60		175	Si	
73	B172-110	1.1k	2.0	50	60		150C	Si	
74	250R11B	1.1k	2.5	25	250		175	Si	
75	300R11B	1.1k	3.0	25	250		175	Si	
76	3A1100	1.1k	3.0	50	50	8.0m	150	Si	A298q
77	3A1100FS	1.1k	3.0	50	50	8.0m	150	Si	A298q
78	KBPC110*	1.1k	3.0	50C	50		150S	Si	
79	350R11B	1.1k	3.5	25	250		175	Si	
80	400R11B	1.1k	4.0	25	250		175	Si	
81	450R11B	1.1k	4.5	25	250		175	Si	
82	SSiD9960A	1.1k	4.7	45A		10m	150J	SiΔ	S344
83	500R11B	1.1k	5.0	25	250		175	Si	
84	550R11B	1.1k	5.5	25	250		175	Si	
85	600R11B	1.1k	6.0	25	250		175	Si	
86	DA6-1100	1.1k	9.0	95C	120	10m	150J	Si	A31u
87	S20110	1.1k	16	126C	200	8.3m	190J	SiΔ	S488⊠
88	S21110	1.1k	16	126C	250	8.3m	190J	SiΔ	S488⊠
89	SSiE4560	1.1k	35		375	10m	175J	Si	S559
90	SSiE4660	1.1k	35		375	10m	175J	Si	S559
91	SSiE4360	1.1k	35	120C	300	10m	175J	Si	M1218
92	SSiE4460	1.1k	35	120C	300	10m	175J	Si	M1218
93	S34110	1.1k	45	122C	700	8.3m	190J	SiΔ	S488b⊠
94	KGD1423SX	1.1k	50	45A	250			Si	M1086
95	KGB0523SX	1.1k	70	45A	600	10m		Si	M1087
96	S36110	1.1k	70	138C	1.2k	8.3m	190J	SiΔ	S488b⊠
97	KGD1523SX	1.1k	80	45A	600			Si	M1087
98	D60-1100	1.1k	85	96C	1.1k	10m	150J	Si	S171g%
99	DSAI75-11B	1.1k	85	115C	1.0k§	10m	180J	Si	S465b
100	S37110	1.1k	85	132C	1.5k	8.3m	190J	SiΔ	S488b⊠
101	SSiF3860	1.1k	89	119	1.0k	10m	180J	SiΔ	S72mΔ
102	SSiF3960	1.1k	89	119	1.0k	10m	180J	SiΔ	S72mΔ
103	R5021110RSWA	1.1k	100		2.2k	5.0m	150J	Si	DO8⊠
104	A177PA	1.1k	100	100C	2.5k	8.3m	175J	SiΔ	S120j
105	A170PA	1.1k	100	130C	2.5k	8.3m	200J	SiΔ	S120j⊠
106	SSiG3860	1.1k	109	118	1.1k	10m	180	SiΔ	S72mΔ
107	SSiG3860A	1.1k	109	118	1.1k	10m	180	SiΔ	S52cΔ
108	SSiG3960	1.1k	109	118	1.1k	10m	180	SiΔ	S72mΔ
109	SSiG3960A	1.1k	109	118	1.1k	10m	180	SiΔ	S52cΔ
110	KGB0613SX	1.1k	125	45A	1.8k	10m		Si	M1088
111	S42110	1.1k	125	130C	1.8k	8.3m	190J	SiΔ	DO8⊠
112	S42110TS	1.1k	125	130C	1.8k	8.3m	190J	SiΔ	S464
113	KGD1613SX	1.1k	150	45A	1.8k			Si	M1088
114	A187PA	1.1k	150	50C	2.8k	8.3m	125J	SiΔ	S120j⊠
115	S43110	1.1k	150	125C	2.1k	8.3m	190J	SiΔ	DO8⊠
116	S43110TS	1.1k	150	125C	2.1k	8.3m	190J	SiΔ	S464
117	A180PA	1.1k	150	143C	3.4k	8.3m	200J	SiΔ	S120j⊠
118	SSiK3860	1.1k	160	126	4.0k	10m	180J	SiΔ	S72mΔ
119	SSiK3960	1.1k	160	126	4.0k	10m	180J	SiΔ	S72mΔ
120	KGB0713SX	1.1k	170	45A	2.8k	10m		Si	M1088
121	KGD1713SX	1.1k	210	45A	2.8k	10m		Si	M1088
122	S20N1200JA	1.1k	210	100C	4.5k§	10m	150J	SiΔ	M378
123	S20P1200JA	1.1k	210	100C	4.0k§	10m	175J	SiΔ	M378
124	R6021122PSYA	1.1k	220	150J	3.5k	5.0m	150J	Si	DO9⊠
125	A197PA	1.1k	250	110C	5.0k	8.3m	175J	SiΔ	S435a⊠
126	S53110	1.1k	250	122C	4.5k	8.3m	190J	SiΔ	DO9⊠
127	S53110TS	1.1k	250	122C	4.5k	8.3m	190J	SiΔ	S464a
128	A190PA	1.1k	250	144C	6.5k	8.3m	200J	SiΔ	S435a⊠
129	A399PA	1.1k	275	80C	6.0k		150J	Si	M1147
130	SSiK2860	1.1k	296	136C	2.7k	10m	180J	Si*	M851
131	D300-1100	1.1k	300	100C	6.1k	10m	150J	Si	M486a%⊠
132	DSA304-11A	1.1k	300	100C	4.3k§	10m	150J	Si	C240e
133	S504110	1.1k	300	132C	5.0k	8.3m	190J	SiΔ	DO9⊠
134	S504110TS	1.1k	300	132C	5.0k	8.3m	190J	SiΔ	S464a
135	R6221130PS00	1.1k	300	150J	3.5k	5.0m	150	Si	C242
136	S30N1200JA4	1.1k	320	100C	4.5k§	10m	175J	SiΔ	M378
137	SSiL3860	1.1k	386	109	7.2k	10m	180	SiΔ	S345
138	SSiL3960	1.1k	386	109	7.2k		180J	SiΔ	SW345
139	DSA400-11NC	1.1k	400	98C	9.8k	10m	150J	Si	
140	A397PA	1.1k	400	110	5.0k	8.3m	175	SiΔ	M771
141	NLA397PA	1.1k	400	110C	5.0k	8.3m	125J	Si	C242a
142	A390PA	1.1k	400	145	7.0k	8.3m	200J	SiΔ	M771
143	NLA390PA	1.1k	400	145C	7.0k		200J	Si	C242a
144	DSA400-11KC	1.1k	450	90C	9.8k	10m	105J	Si	M1214
145	DSA603-11GC	1.1k	450	119C	14k	10m	150J	Si	M1215
146	DSA603-11L1C	1.1k	450	119C	14k	10m	150J	Si	M1215
147	DS402ST11	1.1k	500	55C	4.5k§	10m	175C	Si	C248
148	AR402P11	1.1k	575	55H	4.5k§	10m	175J	SiΔ	M1136§%
149	AR402S11	1.1k	575	55H	4.5k§	10m	175J	SiΔ	M1136♦%
150	SSiN3060	1.1k	580	121C	9.4k	10m	180J	SiΔ	S12a
151	SSiN3160	1.1k	580	121	9.4k		180J	SiΔ	S12a
152	A402DP	1.1k	600	60C	9.5k		150J	Si	C246b
153	S904SXU11	1.1k	600	100C	9.0k§	10m	175J	Si	M759⊠
154	SSiL2860	1.1k	665	115C	7.2k	10m	180J	SiΔ	M851
155	S954SXU11	1.1k	680	100C	9.0k§	10m	175J	Si	M759⊠
156	A437PA	1.1k	750	65	10k	8.3m	175C	SiΔ	C246b
157	A596PA	1.1k	750	70	10k	8.3m	130	Si	M463
158	DF752-11	1.1k	800	150J	1.2k	10m	150J	Si#	M1337
159	S1104SXU11	1.1k	850	100C	16k§	10m	175J	Si	M759⊠
160	S951SXU11	1.1k	880	100C	16k§	10m	175J	Si	M759⊠
161	A620DP	1.1k	900	65	9.5k		150J	Si	C246b
162▼	ZZZZD902A	1.1k	999						
163▼	ZZZZD902B	1.1k	999						
164▼	ZZZZD902C	1.1k	999						
165	DS804SE11	1.1k	1.0k	55H	9.0k		175J	Si	C248
166	A430PA	1.1k	1.0k	113C	10k	8.3m	200J	SiΔ	C246b
167	NLA430PA	1.1k	1.0k	113C	10k	8.3m	200J	Si	C246b
168	S1101SXU11	1.1k	1.01k	100C	25k	10m	175J	Si	M759⊠
169	DS904SM11	1.1k	1.11k	55C	9.0k§	10m	200S	SiΔ	C245b
170	AR904P11	1.1k	1150	55H	9.0k§	10m	175J	SiΔ	M1005§%
171	AR904S11	1.1k	1150	55H	9.0k§	10m	175J	SiΔ	M1005♦%
172	A330PA	1.1k	1.2k	112C	11k		200J	SiΔ	M1147
173	DSA705-11AC	1.1k	1.3k	26C	14k	10m	150J	Si	M953
174	A440PA	1.1k	1.5k	115C	21k		200J	SiΔ	C245e
175	DSA1508-11AC	1.1k	1520	100	29k	8.3m	150	Si	M246l
176	AR1104P11	1.1k	1550	55H	175 §	10m	175J	SiΔ	M1005§%
177	AR1104S11	1.1k	1550	55H	175k§	10m	175J	SiΔ	M1005♦%
178	DS1104SM11	1.1k	1.55k	55C	16k§	10m	200S	SiΔ	M757
179	A730PA	1.1k	1.8k	100C	25k		175J	Si	M1148
180	DS2004SN11	1.1k	2.0k	55C	25k§	10m	180S	SiΔ	M954
181	A621PA	1.1k	2.0k	65C	25k		175J	Si	C246b
182	SSiP6060	1.1k	2.06k	92	17k	10m	180	SiΔ	C246j
183	DS1101SM11	1.1k	2.1k	55H	25k	10m	175J	Si	M757
184	AR2004P11	1.1k	2250	55H	25k§	10m	175J	SiΔ	M1006§%
185	AR2004S11	1.1k	2250	55H	25k§	10m	175J	SiΔ	M1006♦%
186	A740PA	1.1k	2.4k	100C	32k		175J	Si	M1148
187	DS2002SN11	1.1k	2.8k	55H	33k	10m	175J	SiΔ	M954
188	JD4000-11	1.1k	3.0k	150J	50k	8.3m	150J	Si	M946
189	JD4500-11	1.1k	3.4k	150J	50k	8.3m	150J	Si	
190	1N543A	1.2k	.035	100A			150A	Si	A9k
191	HV12A	1.2k	.05	50A	17 §	10m	175A	Si	A3t
192	MV12A	1.2k	.05	50A	16 §	10m	175A	Si	A3h
193	10R12B	1.2k	.10	25	60		175	Si	
194	dc6AX5	1.2k	100m	35A	50		125A	Si	M1195a
195	dc6X4	1.2k	100m	35A	50		125A	Si	M1194a
196	1N1409	1.2k	.125	75A	6.0		150	Si	A149
197	1N2503	1.2k	.15	25A			150A	Si	A6
198	CP104	1.2k	.15	100				Si	M84ag
199	A1N1	1.2k	.20	25	60		175A	Si	A41q
200	A1N5	1.2k	.20	25	60		175A	Si	A41q
201	A1N9	1.2k	.20	25	60		175A	Si	A41q
202	B1N1	1.2k	.20	25	60		175A	Si	A1rx
203	B1N5	1.2k	.20	25	60		175A	Si	A1rx
204	B1N9	1.2k	.20	25	60		175A	Si	A1rx
205	K1N5	1.2k	.20	50	60		150C	Si	
206	HV12B	1.2k	.25	50A	17 §	10m	175A	Si	A3t
207	MV12B	1.2k	.25	50A	16 §	10m	175A	Si	A3h
208	7D12	1.2k	250m	65A	3.0	8.3m	150A	Si	DO7
209	1N549	1.2k	.30	25			150	Si	A189
210	1N2507	1.2k	.30	25A			150A	Si	A6
211	1N3487	1.2k	.40	35A	10		125A	Si	DO1
212	K2N5	1.2k	.40	50	60		150C	Si	
213	1N1109	1.2k	.43	100	26	4.0m	150	Si	F22b
214	A2N4	1.2k	.475	25A	25		175A	Si	A41p
215	1N3107	1.2k	500m		15	8.3m	200A	SiΔ	A86c
216	R1200	1.2k	0.5		30	8.0m	175A	Si	DO41
217	1N3233	1.2k	500m	50A	12		175S	Si	A1cs
218	DFC05N	1.2k	.50	50	20		125J	SiΔ	A298r
219	HV12C	1.2k	.50	50A	17 §	10m	175A	Si	A3t
220	MV12C	1.2k	.50	50A	16 §	10m	175A	Si	A3h

SYMBOLS AND CODES EXPLAINED IN INTERPRETER

11. RECTIFIERS, HIGH VOLTAGE - PIV ≥ 1 kV (Cont'd)

IN ORDER OF: (1) PIV (2) IO MAX (3) @ TEMP & (4) TYPE NUMBER

LINE No.	4 TYPE NUMBER	1 PIV (V)	MAX AVG FWD DC CURRENT 2 Io MAX (A)	3 @ TEMP (°C)	MAX RATING SURGE CURR PEAK 1 Cy (A)	PULSE WIDTH (s)	MAX. TEMP (°C)	MAT	DRAWING NO.
1	SLD1.2S	1.2k	500m	50A	30	8.0m	150A	Si	F22b
2	SI12A	1.2k	500m	150	80	10m		Si	A1bc
3	A2N1	1.2k	.60	25	60		175A	Si	A41q
4	A2N5	1.2k	.60	25	60		175A	Si	A41q
5	A2N9	1.2k	.60	25	60		175A	Si	A41q
6	B2N1	1.2k	.60	25	60		175A	Si	A1rx
7	B2N5	1.2k	.60	25	60		175A	Si	A1rx
8	B2N9	1.2k	.60	25	60		175A	Si	A1rx
9	K3N5	1.2k	.60	50	60		150C	Si	
10	RA-1D	1.2k	600m	50A	25	10m	130J	Si	A334
11	SH-1D	1.2k	600m	50A	30	10m	130J	Si	A271
12	1N3109	1.2k	700m		15	8.3m	200A	Si△	S82
13	1N2777	1.2k	.75	25A	15		165S	Si	A145
14	75R12B	1.2k	.75	25	60		175	Si	
15	A3N1	1.2k	.75	25	60		175A	Si	A41q
16	A3N5	1.2k	.75	25	60		175A	Si	A41q
17	A3N9	1.2k	.75	25	60		175A	Si	A41q
18	B3N1	1.2k	.75	25	60		175A	Si	A1rx
19	B3N5	1.2k	.75	25	60		175A	Si	A1rx
20	B3N9	1.2k	.75	25	60		175A	Si	A1rx
21	1N2618	1.2k	.75	50A	30		175A	Si△	A31a
22	1N3244	1.2k	750m	50A	15		175S	Si	A1cs
23	1N3724	1.2k	.75	50A	12		175A	Si	A1bp
24	A3N3	1.2k	.75	50A	35		175A	Si	A41p
25	CER1200F	1.2k	.75	50A	50	8.0m	175A	Si	F29
26	M1200	1.2k	.75	50	50	8.3m	175	Si	A3h
27	ID12080	1.2k	800m		7.5k		190	Si	M681
28	1S1349	1.2k	.80	50A	40	8.3m	150J	Si△	A89b
29	K4N5	1.2k	.80	50	60		150C	Si	
30	A4N1	1.2k	.85	25	60		175A	Si	A41q
31	A4N5	1.2k	.85	25	60		175A	Si	A41q
32	A4N9	1.2k	.85	25	60		175A	Si	A41q
33	B4N1	1.2k	.85	25	60		175A	Si	A1rx
34	B4N5	1.2k	.85	25	60		175A	Si	A1rx
35	B4N9	1.2k	.85	25	60		175A	Si	A1rx
36	12SM1	1.2k	1.0		40			Si	A3ah
37	1N2226	1.2k	1.0	25$	20		150	Si△	DO4
38	1N2226A	1.2k	1.0	25$	20		150	Si△	DO4
39	1N2227	1.2k	1.0	25$	20		150	Si△	S35
40	1N2227A	1.2k	1.0	25$	20		150	Si△	S35
41	100R12B	1.2k	1.0	25	60		175	Si	
42	A5N1	1.2k	1.0	25	60		175A	Si	A41q
43	A5N5	1.2k	1.0	25	60		175A	Si	A41q
44	A5N9	1.2k	1.0	25	60		175A	Si	A41q
45	B5N1	1.2k	1.0	25	60		175A	Si	A1rx
46	B5N5	1.2k	1.0	25	60		175A	Si	A1rx
47	B5N9	1.2k	1.0	25	60		175A	Si	A1rx
48	US12	1.2k	1.0	25A	20	8.3m	150	Si	A1fv
49	PR121	1.2k	1.0	40A	20	10m	125J	Si	Albg
50	SM1-12	1.2k	1.0	40A	45	10m	125J	Si	A298a
51	SM1A12	1.2k	1.0	40A	45	10m	140J	Si	A437
52	SM-1A-12	1.2k	1.0	40A	45	10m	140J	Si	A437
53	1QE11	1.2k	1.0	50C	50	10m	150J	Si	A299
54	K5N5	1.2k	1.0	50	60		150C	Si	
55	GP10Q	1.2k	1.0	55A	25		175	Si	DO41
56	MB-1D	1.2k	1.0	60A	100	10m	140J	Si△	A363
57	BA5N5	1.2k	1.0	75	30		175	Si	A1rx
58	PY127	1.2k	1.0	75	100	10m	150J	Si	A1bg
59	A5N2	1.2k	1.0	100A	45		200A	Si	A41p
60	ER443	1.2k	1.0	100	50		175	Si	DO41
61	HC1200	1.2k	1.1	25A	50	2.0m	150A	Si	DO27
62	HC1200F	1.2k	1.1	50A	50	8.0m	175A	Si	F29
63	MH1200	1.2k	1.1	50	50	8.3m	175	Si	A3h
64	A6N1	1.2k	1.2	25	60		175A	Si	A41q
65	A6N5	1.2k	1.2	25	60		175A	Si	A41q
66	A6N9	1.2k	1.2	25	60		175A	Si	A41q
67	B6N1	1.2k	1.2	25	60		175A	Si	A1rx
68	B6N5	1.2k	1.2	25	60		175A	Si	A1rx
69	B6N9	1.2k	1.2	25	60		175A	Si	A1rx
70	F121	1.2k	1.2	25A	30	10m	150J	Si	DO13
71	DS0.9-12A	1.2k	1.2	45A	70	10m	150J	Si	
72	DSA0.9-12A	1.2k	1.2	45A	70	10m	150J	Si	
73	EC120	1.2k	1.2	50	75	8.3m	150	Si	DO27
74	K6N5	1.2k	1.2	50	60		150C	Si	
75	SSiC1580A	1.2k	1.25	45A	75	10m	150J	Si△	A41n
76	3RUS2120	1.2k	1.25	50	100		150	Si	A3az
77	ERB16-12	1.2k	1.3		40		165J	Si	A333
78	SKE1/12	1.2k	1.3	45A	50	10m	160J	Si	M746a
79	BYX22-1200	1.2k	1.4	30A	40	10m	150A	Si	A163
80	DSA1.2-12A	1.2k	1.4	45A	75	10m	150J	Si	
81	SKS1/12	1.2k	1.4	45A	100	10m	160J	Si	M746a
82	BYX45-1200R	1.2k	1.5		40	10m	150J	Si△	DO1⊿⊿
83	SI12	1.2k	1.5		60			Si	A1ty
84	1N2656	1.2k	1.5	25A	15	8.3m	165A	Si	M126a
85	150R12B	1.2k	1.5	25	60		175	Si	
86	A7N1	1.2k	1.5	25	60		175A	Si	A41q
87	A7N5	1.2k	1.5	25	60		175A	Si	A41q
88	A7N9	1.2k	1.5	25	60		175A	Si	A41q
89	B7N1	1.2k	1.5	25	60		175A	Si	A1rx
90	B7N5	1.2k	1.5	25	60		175A	Si	A1rx
91	B7N9	1.2k	1.5	25	60		175A	Si	A1rx
92	DSA2-12A	1.2k	1.5	45A	120	10m	150J	Si	
93	SSiC1680A	1.2k	1.5	45A	75	10m	150J	Si△	A230
94	K7N5	1.2k	1.5	50	60		150C	Si	
95	TA120	1.2k	1.5	75A	30	8.3m	175A	Si	A298ap
96	DS1.2-12A	1.2k	1.7	45A	75	10m	150J	Si	
97	BY227	1.2k	1.75	25A	50 §	8.3m	150J	Si	A283a
98	DS2-12A	1.2k	1.8	45A	120	10m	180J	Si	
99	BY246-1200	1.2k	2.0		60	10m	175J	Si	A313l
100	ERC16-12	1.2k	2.0		60		175J	Si	A313l
101	200R12B	1.2k	2.0	25	60		175	Si	
102	2A1200	1.2k	2.0	50A	200	8.0m	175A	Si	A3t
103	B8N5	1.2k	2.0	50	90	8.3m	175A	Si	A1rx
104	B172-120	1.2k	2.0	50	60		150C	Si	
105	K8N5	1.2k	2.0	50	60		150C	Si	
106	SSiC1980A	1.2k	2.3	45A	75	10m	150J	Si△	A231
107	250R12B	1.2k	2.5	25	250		175	Si	
108	M2-1200	1.2k	2.5	30A	100		150J	Si	A435
109	M2-1200R	1.2k	2.5	30A	100		150J	Si	A435
110	MZ2-1200	1.2k	2.5	30A	100		150J	Si	A435
111	MZ2-1200R	1.2k	2.5	30A	100		150J	Si	A435
112	SKE2.5/12	1.2k	2.5	45A	150	10m	150J	Si	M571c
113	SKN2.5/12	1.2k	2.5	45A	150	10m	180J	Si	S452
114	12SM3	1.2k	3.0		80			Si	A3ai
115	S3A12	1.2k	3.0		200			Si	A1ey
116♦	SR0312	1.2k	3.0					Si	D04
117	1N2720	1.2k	3.0	25A	15	8.3m	165A	Si	M126c
118	1N2739	1.2k	3.0	25A	15	8.3m	165A	Si	M126g
119	1N2764	1.2k	3.0	25A	15	8.3m	165A	Si	M126g
120	300R12B	1.2k	3.0	25	250		175	Si	
121	1N4146	1.2k	3.0	50A	300	8.3m	175A	Si	A1vm
122	3A1200	1.2k	3.0	50A	50	8.0m	150	Si	A1eq
123	3A1200FS	1.2k	3.0	50	50	8.0m	150	Si	A298q
124	3C1200	1.2k	3.0	50A	300	8.3m	175A	Si	A3q
125	1N3370	1.2k	3.0	55C	30	8.3m	200C	Si	S505
126	BYW17-1200	1.2k	3.0	80A	240	10m	150J	Si	A318
127	350R12B	1.2k	3.5	25	250		175	Si	
128	1N2690	1.2k	3.6	25A	15	8.3m	165A	Si	M126e
129	400R12B	1.2k	4.0	25	250		175	Si	
130	BY458	1.2k	4.0	25C	30	10m	175C	△	A333C
131	SSiC2080A	1.2k	4.0	115C	75	10m	150J	Si△	S112b△
132	450R12B	1.2k	4.5	25	250		175	Si	
133	S5A12	1.2k	5.0		200			Si	A1ey
134	1N2244	1.2k	5.0	25$	20		150	Si△	DO4
135	1N2244A	1.2k	5.0	25$	100		150	Si△	DO4
136	1N2245	1.2k	5.0	25$	20		150	Si△	S35
137	1N2245A	1.2k	5.0	25$	100		150	Si△	S35
138	500R12B	1.2k	5.0	25	250		175	Si	
139	SKN5/12	1.2k	5.0	45A	160	10m	180J	Si	S352b
140	M5N5	1.2k	5.0	55A	300		175A	Si	A1ep
141	550R12B	1.2k	5.5	25	250		175	Si	
142	15SM6	1.2k	6.0		200			Si	S513
143	6A1200	1.2k	6.0	25	300	8.0m	175	Si	S19f
144	600R12B	1.2k	6.0	25	250		175	Si	
145	M7N5	1.2k	6.0	50	400	8.3m	175	Si	A1ep
146	BYX49-1200	1.2k	6.0	85B	40 §	10m	150J	Si	M754⊿
147♦	D6/1200A	1.2k	6.0	100C	120 §	10m	150J	Si	A231
148♦	DA6/1200	1.2k	6.0	100C	§	10m	150J	Si	A31u
149	BYX38-1200	1.2k%	6.0	110B	50	10m	150J	Si	DO4⊿
150	M6-1200	1.2k	6.0	120C	130 §	10m	150S	Si	DO4⊿
151	BYX98-1200	1.2k	6.0	125B	75 §	10m	150J	Si△	DO4⊿
152	M6-1200R	1.2k	6.0	130A	130		150J	Si	DO4
153	MZ6-1200	1.2k	6.0	130A	130		150J	Si	DO4
154	MZ6-1200R	1.2k	6.0	130A	130		150J	Si	DO4
155	6QF11	1.2k	6.0	145C	150	10m	175J	Si	S187a
156	1N2281	1.2k	6.0	150C	400	8.3m	150C	Si	DO5
157	BY329-1200	1.2k	8.0	108A	80	10m	150J	Si	TO220A
158	BYX39-1200	1.2k	9.5	85A	125	10m	175J	Si	DO4⊿
159	1N2264	1.2k	10	25$	200		150	Si△	DO4
160	1N2264A	1.2k	10	25$	200		150	Si△	DO4
161	1N2265	1.2k	10	25$	200		150	Si△	S35
162	1N2265A	1.2k	10	25$	200		150	Si△	S35
163	1N3934	1.2k	10	25$	25		150	Si△	DO4
164▼	D10N1200B	1.2k	10	100C	170 §	10m	150J	Si	S493c
165▼	D10N1200C	1.2k	10	100C	170 §	10m	150J	Si	S493b
166	DSA6-12F	1.2k	10	100C	180	10m	150J	Si	
167	SSiD0480	1.2k	10	110C	125	10m	160J	Si△	S4p△
168	SSiD0480A	1.2k	10	110C	125	10m	160J	Si△	S4p△
169	11R12S	1.2k	10	120C	200	10m	175	Si	S103
170	S19L	1.2k%	10	124C	310	8.3m	150J	Si	S522
171	S20L	1.2k%	10	124C	280	10m	150J	Si	S522a
172	DS6-12F	1.2k	10	130C	180	10m	180J	Si	
173	DSA9-12F	1.2k	11	120C	250	10m	150J	Si	
174	DS9-12F	1.2k	11	150C	250	10m	180J	Si	
175♦	SR1212	1.2k	12					Si	D04
176	BYX42-1200	1.2k%	12	115B	125	10m	175J	Si△	DO4⊿
177	SR10A24	1.2k	12	120C	200 §	8.3m	150J	Si△	S19t
178	1N4511	1.2k	12	135C	240		175C	Si	DO4
179	12QF11	1.2k	12	138C	240	10m	175J	Si	S4k
180	SKDD20/12	1.2k	12.7	70C	300		150J	Si	C238a
181	SKMD20/12	1.2k	12.7	70C	300		150J	Si	C238b
182	SKND20/12	1.2k	12.7	70C	300		150J	Si	C238c
183	15SM15	1.2k	15		300			Si	S513
184	BYX99-1200	1.2k	15	129B	180 §	10m	175J	Si△	DO4⊿
185♦	SR1612	1.2k	16					Si	D04
186	M16-1200	1.2k	16	120C	230 §	10m	175S	Si	DO4⊿
187	S20120	1.2k	16	126C	200	8.3m	190J	Si△	S488⊿
188	M16-1200R	1.2k	16	135A	230		175J	Si	DO4
189	MZ16-1200	1.2k	16	135C	230		175J	Si	DO4
190	MZ16-1200R	1.2k	16	135C			175J	Si	DO4
191	FC14F	1.2k	17	85C	300		125J	Si	M1288a
192	SW12PCN012	1.2k	17	100C	210 §	10m	150J	Si	DO4⊿
193	SKKD15-12	1.2k	17.5	96C	320	10m	125J	Si	M1055
194	SKKE15-12	1.2k	17.5	96C	320	10m	125J	Si	M1056
195	BYX25-1200	1.2k	20		360	10m	175J	Si△	DO4⊿
196	SCHS12500	1.2k	20.0	55	150		175A	Si	A138u
197	BYX13-1200	1.2k	20	100C	600	10m	150J	Si	S72c⊿
198	Q19L	1.2k%	20	100C	440	8.3m	150J	Si	S522
199	Q20L	1.2k%	20	100C	400	10m	150J	Si	S522a
200	SKR1M20/12	1.2k	20	108C	320	10m	150J	Si	DO4
201	21R12S	1.2k	20	120C	400	10m	175	Si	S102
202	SKR26/12	1.2k	20	125C	350	8.3m	180A	Si	DO4
203	1N2288	1.2k	20	150C	400	8.3m	150C	Si	DO5
204	S21120	1.2k	22	131C	250	8.3m	190J	Si△	S488⊿
205▼	D24N1200B	1.2k	24	100C	510 §	10m	150J	Si	S493e
206▼	D24N1200C	1.2k	24	100C	510 §	10m	150J	Si	S493d
207▼	D24N1200U	1.2k	24	100C	510 §	10m	150J	Si	S493d
208▼	D24NR1200B	1.2k	24	100C	510 §	10m	150J	Si	S493e
209▼	D24NR1200C	1.2k	24	100C	510 §	10m	150J	Si	S493d
210▼	D24NR1200U	1.2k	24	100C	510 §	10m	150J	Si	S493d
211	15SM25	1.2k	25		400			Si	S514
212♦	SR2512	1.2k	25					Si	D05
213	SKN20/12	1.2k	25	100C	320	10m	180J	Si	S171s⊿
214	SKR20/12	1.2k	25	100C	350	8.3m	180A	Si	DO4
215	A25PB	1.2k	25	120C	300		175J	Si	DO4
216	M25-1200	1.2k	25	120A	300		175J	Si	S436
217	M25-1200R	1.2k	25	120A	300		175J	Si	S436
218	SKN26/12	1.2k	25	125C	320	10m	180J	Si	DO4
219	DS17-12A	1.2k	25	130C	300	10m	180J	Si	
220	DSA17-12A	1.2k	25	130C	300	10m	150J	Si	

SYMBOLS AND CODES EXPLAINED IN INTERPRETER

11. RECTIFIERS, HIGH VOLTAGE - PIV ≥ 1 kV (Cont'd)

IN ORDER OF: (1) PIV (2) IO MAX (3) @ TEMP & (4) TYPE NUMBER

LINE No.	4 TYPE NUMBER	1 PIV (V)	MAX AVG FWD DC CURRENT 2 Io MAX (A)	3 @ TEMP (°C)	MAX RATING SURGE CURR PEAK 1 Cy (A)	PULSE WIDTH (s)	MAX. TEMP (°C)	MAT	DRAWING NO.
1	25QF11	1.2k	25	140C	500	10m	175J	Si	S4k
2	VBO13-12N01	1.2k	30	30C	220	10m	150J	Si	
3	SA12PCN020	1.2k	30	115C	245	10m	175J	Si	DO4
4	SW12PCN020	1.2k	30	115C	245		175J	Si	DO4Ø
5	F3R3	1.2k	30	124C	300		190C	Si	DO5
6	BYX96-1200	1.2k	30	125B	400 §	10m	175J	Si	S455Ø
7	SA12PCN030	1.2k	30	125C	350	10m	175J	Si	DO4
8	SW12PCN030	1.2k	30	125C	350 §	10m	175J	Si	DO4Ø
9	DD22S1200	1.2k	32	64C	390	10m	150J	Si	20
10	MDD25-12N1	1.2k	32	80C	450	10m		Si	
11▼	D34N1200B	1.2k	34	100C	550 §	10m	150J	Si	S493e
12▼	D34N1200C	1.2k	34	100C	550 §	10m	150J	Si	S493d
13▼	D34N1200U	1.2k	34	100C	550 §	10m	150J	Si	S493d
14▼	D34NR1200B	1.2k	34	100C	550 §	10m	150J	Si	S493e
15▼	D34NR1200C	1.2k	34	100C	550 §	10m	150J	Si	S493d
16▼	D34NR1200U	1.2k	34	100C	550 §	10m	150J	Si	S493d
17♦	SR3512	1.2k	35					Si	D05
18	T483F	1.2k	35	75C	500	8.3m	125J	Si	M1332c
19	1N4530	1.2k	35	115C	500		175C	Si	DO5
20	1N5332	1.2k	35	140C	500 §		200C	Si	DO5
21	F4R3	1.2k	37	123C	600		190C	Si	DO5
22	DD31S1200	1.2k	38	82C	470	10m	150J	Si	20
23	D24/1200B	1.2k	38	83C	510	10m	150J	Si	S493a
24	D24/1200C	1.2k	38	83C	510	10m	150J	Si	S493
25	DD31N1200	1.2k	38	83C	550	10m	150J	Si	20
26	15SM40	1.2k	40		500			Si	S514
27	40HF120	1.2k	40		500 §	8.3m	180J	Si△	DO5Ø
28♦	SR4012	1.2k	40					Si	D05
29	VBO20-12N01	1.2k	40	55C	300	10m	150J	Si	
30	10MA120	1.2k	40	104C	800	10m	130J	Si	S527a
31	SR30D-24R	1.2k	40	104C	800	8.3m	130	Si	S19aa
32	SR30D-24S	1.2k	40	104C	800	8.3m	130	Si	S19aa
33	MZ41-1200	1.2k	40	115C	400		150J	Si	DO5
34	MZ41-1200R	1.2k	40	115C	400		150J	Si	DO5
35	M41-1200	1.2k	40	120C	400 §	10m	165S	Si	S437Ø
36	BYX52-1200	1.2k	40	125B	800 §	10m	175J	Si	DO5Ø
37	BYX97-1200	1.2k	40	125A	800 §	10m	150J	Si	S29bØ
38▼	SD040N12P	1.2k	40	146C	600	10m	180J	Si	DO5
39▼	SD040R12P	1.2k	40	146C	600	10m	180J	Si	DO5
40▼	SD041N12P	1.2k	40	146C	600	10m	180J	Si	S567a
41	DSA22-12A	1.2k	41	80C	450	10m	150J	Si	
42	DS22-12A	1.2k	41	110C	450	10m	180J	Si	
43	SKKD46-12	1.2k	45	86C	700		125J	Si	Y240
44	F5R3	1.2k	45	122C	700		190C	Si	DO5
45	S34120	1.2k	45	122C	700	8.3m	190J	Si△	S488bØ
46	BYX56-1200	1.2k	48	112A	800	10m	175J	Si	DO5Ø
47	T481F	1.2k	50	75B	800	8.3m	125A	Si	M1332a
48	T484F	1.2k	50	75C	500	8.3m	125J	Si	M1332d
49	T485F	1.2k	50	75C	500	8.3m	125J	Si	M1332e
50	SKR1M40/12	1.2k	50	97C	700	10m	150J	Si	DO5
51	SKN45/12	1.2k	50	100C	700	10m	180J	Si	S171yØ
52	SKN46/12	1.2k	50	100C	600	10m	180J	Si	DO5
53	SKR45/12	1.2k	50	100C	600	10m	180J	Si	DO5
54	SKR46/12	1.2k	50	100C	600	10m	180J	Si	DO5
55	50QF11	1.2k	50	135C	1.5k	10m	175J	Si	S168b
56	DSA35-12A	1.2k	51	85C	650	10m	150J	Si	
57	DS35-12A	1.2k	51	115C	650	10m	180J	Si	
58	D34/1200B	1.2k	54	88C	550	10m	150J	Si	S493a
59	D34/1200C	1.2k	54	88C	550	10m	150J	Si	S493
60	15SM55	1.2k	55		1.0k			Si	S515
61	IRKD56-12	1.2k	55	25J	1.6k		150J	Si	M1188a*
62	IRKE56-12	1.2k	55	25J	1.6k		150J	Si	M1188b
63♦	SR6012	1.2k	60					Si	D05
64▼	D60N1200B	1.2k	60	100C	1.3k§	10m	150J	Si	S567a
65▼	D60N1200C	1.2k	60	100C	1.3k§	10m	150J	Si	S571
66▼	D60N1200U	1.2k	60	100C	1.3k§	10m	150J	Si	S571
67▼	D60NR1200B	1.2k	60	100C	1.3k§	10m	150J	Si	S576a
68▼	D60NR1200C	1.2k	60	100C	1.3k§	10m	150J	Si	S571
69▼	D60NR1200U	1.2k	60	100C	1.3k§	10m	150J	Si	S571
70	DS75-12B	1.2k	60	100C	1.1k	10m	180J	Si	
71	SA12PCN061	1.2k	60	100C	1.0k§	10m	150J	Si△	DO5Ø
72	20MA120	1.2k	60	108C	950	10m	150J	Si	S527a
73	60QC15	1.2k	60	126C	550	10m	175J	Si	S4t
74	M41-1200R	1.2k	63	115C	400		150J	Si	DO5
75	MDD42-12N1	1.2k	64	94C	1.1k	10m	150J	Si	
76	DSA42-12A	1.2k	64	95C	1.1k	10m	150J	Si	
77	D60/1200B	1.2k	65	94C	.80k	10m	150J	Si	S171g%
78	DS42-12A	1.2k	65	124C	1.1k	10m	180J	Si	
79	SKB60/12	1.2k	67	85C	1.0k	10m	125J	Si	C254
80	15SM70	1.2k	70		1.2k			Si	S515
81	70HF120	1.2k	70		1.1k§	8.3m	180J	Si△	DO5Ø
82♦	SR7012	1.2k	70					Si	D05
83	IRKD71-12	1.2k	70	25J	1.7k		150J	Si	M1188a*
84	IRKE71-12	1.2k	70	25J	1.7k		150J	Si	M1188b
85	A77PB	1.2k	70	100C	750		150J	Si	DO5
86	SW12PCN040	1.2k	70	100C	650 §	10m	175J	Si	DO5Ø
87	SA12PCN040	1.2k	70	110C	650	10m	175J	Si	DO4
88	A72PB	1.2k	70	120C	1.0k		150J	Si	DO5
89	M71-1200	1.2k	70	120A	1.0k		150J	Si	DO5
90	M71-1200R	1.2k	70	120A	1.0k		150J	Si	DO5
91	MZ71-1200	1.2k	70	120C	1.0k		150J	Si	DO5
92	MZ71-1200R	1.2k	70	120C	1.0k		150J	Si	DO5
93	S306120F	1.2k	70	125C	1.2k		190J	Si	D05Ø
94	F6R3	1.2k	70	138C	1.2k		190C	Si	DO5
95	S36120	1.2k	70	138C	1.0k	8.3m	190J	Si△	S488bØ
96	70HFR120	1.2k	70	140C	1.2k		140C	Si	DO5
97▼	SD070N12P	1.2k	70	140C	1.1k	10m	180J	Si	DO5
98▼	SD070R12P	1.2k	70	140C	1.1k	10m	180J	Si	DO5
99♦	SD071N12P	1.2k	70	140C	1.1k	10m	180J	Si	S481
100♦	SD071R12P	1.2k	70	140C	1.1k	10m	180J	Si	S481
101	SA12PCN055	1.2k	75	110C	900	10m	175J	Si	DO5
102	SW12PCN055	1.2k	75	110C	900 §	10m	175J	Si	DO5Ø
103	SA12PCN075	1.2k	75	135C	1.3k	10m	175J	Si	DO5
104	SW12PCN075	1.2k	75	135C	1.3k§	10m	175	Si	DO5Ø
105	DD65N1200	1.2k	76	88C	1.6k	10m	150J	Si	20
106	SKKD81-12	1.2k	80	87C	2.0k		125J	Si	Y240
107	SKKE81-12	1.2k	80	87C	2.0k		125J	Si	Y240
108	F7R3	1.2k	85	132C	1.5k		190C	Si	DO5
109	S37120	1.2k	85	132C	1.2k	8.3m	190J	Si△	S488bØ
110	85HF120	1.2k	85	140C	1.4k	6.0m	180J	Si	DO5
111	85HFR120	1.2k	85	140C	1.8k		140C	Si	DO5
112	DD85N1200	1.2k	89	96C	1.9k	10m	150J	Si	20
113	IRKD91-12	1.2k	90	25J	2.2k		150J	Si	M1188a*
114	IRKE91-12	1.2k	90	25J	2.2k		150J	Si	M1188b
115▼	SD090N12P	1.2k	90	135C	1.5k	10m	180J	Si	DO5
116▼	SD090R12P	1.2k	90	135C	1.5k	10m	180J	Si	D05
117▼	SD091N12P	1.2k	90	135C	1.5k	10m	180J	Si	S481
118▼	SD091R12P	1.2k	90	135C	1.5k	10m	180J	Si	S481
119	SKD60/12	1.2k	92	85C	1.0k	10m	125J	Si	C255
120	SKN70/12	1.2k	95	100C	1.0k	10m	180J	Si	S481
121	SKN71/12	1.2k	95	100C	1.0k	10m	180J	Si	DO5
122	SKR70/12	1.2k	95	100C	1.0k	10m	180J	Si	DO5
123	SKR71/12	1.2k	95	100C	1.0k	10m	180J	Si	DO5
124▼	D121NR1200B	1.2k	98	130C	2.7k§	10m	180J	Si	S532a
125▼	D121NR1200V	1.2k	98	130C	2.7k§	10m	180J	Si	S532a
126	15SM100	1.2k	100		3.0k			Si	M986
127	R5021210RSWA	1.2k	100		2.2k	5.0m	150J	Si	DO8Ø
128	DSA75-12B	1.2k	100	38C	1.2k	10m	150J	Si	
129	101KL120S10	1.2k	100	60C	3.0k		125J	Si△	DO8
130	101KLR120S10	1.2k	100	70	3.0k		125J	Si△	DO8
131	ES481F	1.2k	100	75B	1.0k	8.3m	125J	Si	M1331a
132	ES482F	1.2k	100	75B	1.0k	8.3m	125J	Si	M1331b
133	ES483F	1.2k	100	75B	1.0k	8.3m	125J	Si	M1331c
134	ES484F	1.2k	100	75B	1.0k	8.3m	175J	Si	M1131d
135	ES485F	1.2k	100	75B	1.0k	8.3m	175J	Si	M1131e
136	ES581F	1.2k	100	75B	1.0k	8.3m	175J	Si	M1131a
137	ES582F	1.2k	100	75B	1.0k	8.3m	175J	Si	M1131b
138	ES583F	1.2k	100	75B	2.0k	8.3m	175J	Si	M1131c
139	ES584F	1.2k	100	75B	2.0k	8.3m	175J	Si	M1131d
140	ES585F	1.2k	100	75B	2.0k	8.3m	175J	Si	M1131e
141	T482F	1.2k	100	75B	800	8.3m	125A	Si	M1332b
142	101KL120S25	1.2k	100	100C	3.0k		175J	Si△	DO8
143	A177PB	1.2k	100	100C	2.5k	8.3m	175J	Si△	S120j
144▼	D75N1200B	1.2k	100	100C	1.6k§	10m	150J	Si	S567a
145▼	D75N1200C	1.2k	100	100C	1.6k§	10m	150J	Si	S571
146▼	D75N1200U	1.2k	100	100C	1.6k§	10m	150J	Si	S571
147▼	D75NR1200B	1.2k	100	100C	1.6k§	10m	150J	Si	S567a
148▼	D75NR1200C	1.2k	100	100C	1.6k§	10m	150J	Si	S571
149▼	D75NR1200U	1.2k	100	100C	1.6k§	10m	150J	Si	S571
150	KU1012	1.2k	100	100C	1.8k	10m	150J	Si	S421
151	KU1512	1.2k	100	100C	2.5k	10m	150J	Si	S421
152	SKN2M100/12	1.2k	100	100C	1.5k	10m	150J	Si	DO30
153	SKR2M100/12	1.2k	100	100C	1.5k	10m	150J	Si	DO30
154	101F12S	1.2k	100	105C	1.6k	10m	175J	Si	S503Ø
155	101KL120S15	1.2k	100	110C	3.0k		175J	Si△	DO8
156	SR100AM24	1.2k	100	110C	3.0k	8.3m	150J	Si	S435b
157	100QD21	1.2k	100	118C	2.0k	10m	150J	Si	C242c
158	101KLR120S15	1.2k	100	120	3.0k		175J	Si△	DO8
159	101KLR120S20	1.2k	100	120	3.0k		175J	Si△	DO8
160	101KLR120S25	1.2k	100	120	3.0k		175J	Si△	DO8
161	101KLR120S30	1.2k	100	120	3.0k		175J	Si△	DO8
162	SKR100/12	1.2k	100	125C	1.5k	10m	180A	Si	S171m
163	1N3296	1.2k	100	130C	1.6k	8.3m	200C	Si	DO8
164	1N3296A	1.2k	100	130C	2.3k		200C	Si	DO8
165	1N3296R	1.2k	100	130B	1.6k		200A	Si	DO8
166	A170PB	1.2k	100	130C	2.5k	8.3m	200J	Si△	S120jØ
167	DRB100-12R	1.2k	100	150J	1.8k	10m	150J	Si#	C264
168	DRBT100-12R	1.2k	100	150J	1.8k	10m	150J	Si#	C265
169	DSA80-12A	1.2k	110	79C	2.1k	10m	150J	Si	
170	DS80-12A	1.2k	110	110C	2.1k	10m	180J	Si	
171	SKD100/12	1.2k	116	85C	1.1k	10m	125J	Si	C255
172▼	D121N1200B	1.2k	120	100C	3.0k§	10m	180J	Si	S532a
173▼	D121N1200V	1.2k	120	100C	3.0k§	10m	180J	Si	S532a
174	SKN100/12	1.2k	125	100C	1.5k	10m	180J	Si	DO8
175	S42120	1.2k	125	130C	1.8k	8.3m	190J	Si△	DO8Ø
176	S42120TS	1.2k	125	130C	1.8k	8.3m	190J	Si△	S464
177	KU1312	1.2k	130	100C	2.3k	10m	150J	Si	S421
178	15SM150	1.2k	150		3.6k			Si	M986
179	A187PB	1.2k	150	50C	2.8k	8.3m	125J	Si△	S120jØ
180	45MA120	1.2k	150	76C	1.7k	10m	150J	Si	S435g
181	BYX32-1200	1.2k	150	100A	1.6k	10m	190J	Si△	S203bØ
182	1N4595	1.2k	150	110	3.0k		200A	Si	DO8Ø
183	150QD13	1.2k	150	114C	4.5k	10m	150J	Si	S529
184	M151-1200	1.2k	150	115C	3.5k§	10m	175C	Si	S468Ø
185	150QC15	1.2k	150	117C	1.6k	10m	175J	Si	S427
186	BYX14-1200	1.2k	150	125C	3.0k	10m	190J	Si	M294Ø
187	G6R3	1.2k	150	125C	2.1k	8.3m	190C	Si	DO8
188	S43120	1.2k	150	125C	2.1k	8.3m	190J	Si△	DO8Ø
189	S43120TS	1.2k	150	125C	2.1k	8.3m	190J	Si△	S464
190▼	SD150N12M	1.2k	150	125C	3.6k	10m	180J	Si	S569
191▼	SD150N12P	1.2k	150	125C	3.6k	10m	180J	Si	S569
192▼	SD150R12M	1.2k	150	125C	3.6k	10m	180J	Si	S569
193▼	SD150R12P	1.2k	150	125C	3.6k	10m	180J	Si	S569
194	SW12PHN151	1.2k	150	125C	3.2k	10m	180J	Si	S435j
195	M151-1200R	1.2k	150	140A	4.5k		175J	Si	S468
196	A180PB	1.2k	150	143C	3.4k	8.3m	200J	Si△	S120jØ
197	1N5162	1.2k	150	150C	3.0k§	8.3m	200C	Si	DO30
198	150K120A	1.2k	150	150C	3.0k§	8.3m	200J	Si*	DO8Ø
199	150KS120	1.2k	150	150C	2.8k	6.0m	200J	Si	S550
200	150L120A	1.2k	150	150C	3.0k§	8.3m	200J	Si*	DO30Ø
201	152L120A	1.2k	150	150C	2.8k	6.0m	200J	Si	S548a
202	154K120A	1.2k	150	150C	2.8k	6.0m	200J	Si	S549
203	154L120A	1.2k	150	150C	2.8k	6.0m	200J	Si	S549a
204	ST16-120	1.2k	150	150C	3.0k	4.0m	200C	Si	S128bØ
205	DSA110-12A	1.2k	160	77C	3.2k	10m	150J	Si	
206	DS110-12A	1.2k	160	98C	3.2k	10m	180J	Si	
207	1N3274	1.2k	160	125C	2.0k		190J	Si	DO9
208	H6R3	1.2k	160	126C	2.5k	8.3m	190C	Si	DO9
209	SKN130/12	1.2k	165	100C	2.0k	10m	180J	Si	DO8
210	SKR130/12	1.2k	165	100C	2.0k	10m	180J	Si	DO30
211	DS175-12L	1.2k	182	100C	2.8k§	10m	150J	Si	S506dØ
212	15SM200	1.2k	200		4.5k			Si	M986
213	IRKD200-12	1.2k	200	25J	9.0k		125J	Si	M1274 *
214	IRKD240-12	1.2k	200	25J	10k		125J	Si	M1274c*
215	IRKE200-12	1.2k	200	25J	9.0k		125J	Si	M1274a
216	IRKE240-12	1.2k	200	25J	10k		125J	Si	M1274b
217	SV2012	1.2k	200	100C	4.0k	10m	150J	Si	DO8
218▼	SD200N12M	1.2k	200	110C	4.7k	10m	180J	Si	S569
219▼	SD200N12P	1.2k	200	110C	4.7k	10m	180J	Si	S569
220▼	SD200R12M	1.2k	200	110C	4.7k	10m	180J	Si	S569

SYMBOLS AND CODES EXPLAINED IN INTERPRETER

11. RECTIFIERS, HIGH VOLTAGE - PIV ≥ 1 kV (Cont'd)

IN ORDER OF: (1) PIV (2) IO MAX (3) @ TEMP & (4) TYPE NUMBER

LINE No.	4 TYPE NUMBER	1 PIV (V)	MAX AVG FWD DC CURRENT 2 Io MAX (A)	3 @ TEMP (°C)	MAX RATING SURGE CURR PEAK 1 Cy (A)	PULSE WIDTH (s)	MAX. TEMP (°C)	MAT	DRAWING NO.
1▼	SD200R12P	1.2k	200	110C	4.7k	10m	180J	Si	S569
2	SW12PHN201	1.2k	200	110C	4.2k	10m	180J	Si	S435j
3	200QD21	1.2k	200	118C	4.0k	10m	150J	Si	C242d
4	S20N1300JA	1.2k	210	100C	4.5k§	10m	150J	Si△	M378
5	S20P1300JA	1.2k	220	100C	4.0k§	10m	175J	Si△	M378
6	R6021222PSYA	1.2k	220	150J	3.5k	5.0m	150J	Si	DO9⊠
7	SKN2M240/12	1.2k	240	96C	4.7k	10m	150J	Si	DO9
8	SKR2M240/12	1.2k	240	96C	4.7k	10m	150J	Si	DO9
9	1N3175	1.2k	240	100C	3.0k		150J	Si	DO9
10	FD250DM24	1.2k	240	105C	5.0k§	8.3m	150J	Si△	C248a
11	SR200DL24R	1.2k	240	113C	5.0k	8.3m	175J	Si△	S435c
12	SR200DL-24S	1.2k	240	113C	5.0k§	8.3m	175J	Si△	S435
13	251F12S	1.2k	250	50C	4.5k		175J	Si△	S12n
14	253PJA120	1.2k	250	73C	2.7k	10m	150J	Si	M1246
15	70MA120	1.2k	250	74C	4.0k	10m	150J	Si	S12r
16▼	D251NR1200B	1.2k	250	100C	5.5k§	10m	180J	Si	S532b
17▼	D251NR1200E	1.2k	250	100C	5.5k§	10m	180J	Si	M1348
18▼	D251NR1200V	1.2k	250	100C	5.5k§	10m	180J	Si	S532b
19	A197PB	1.2k	250	110C	5.0k	8.3m	175J	Si△	S435a⊠
20	1S2257	1.2k	250	111C	5.0k§	8.3m	150J	Si△	C240
21	J5R3	1.2k	250	122C	4.5k	8.3m	190C	Si	DO9
22	S53120	1.2k	250	122C	4.5k	8.3m	190J	Si△	DO9⊠
23	S53120TS	1.2k	250	122C	4.5k	8.3m	190J	Si△	S464a
24	BYX33-1200	1.2k	250	125B	4.0k	10m	190J	Si△	M294⊠
25	DF451-12	1.2k	250	125J	3.5k	10m	125J	Si#	M771
26	1N3743	1.2k	250	130C	4.5k	8.3m	200C	Si	DO9⊠
27▼	D251N1200B	1.2k	250	130	6.0k§	10m	180J	Si	S532a
28▼	D251N1200E	1.2k	250	130	6.0k§	10m	180J	Si	M1348
29▼	D251N1200V	1.2k	250	130C	6k§	10m	180J	Si	S532b
30	A190PB	1.2k	250	144C	6.5k	8.3m	200J	Si△	S435a⊠
31	70U120	1.2k	250	150C	5.5k	10m	200J	Si	DO9⊠
32	DF252-12	1.2k	270	150J	3.0k	10m	150J	Si#	M771
33	A399PB	1.2k	275	80C	6.0k		150J	Si	M1147
34	DS290-12J	1.2k	290	100C	4.7k§		150J	Si	S506⊠
35	D250/1200E	1.2k	300	85C	5.3k	10m	150J	Si	M486
36	TV3012	1.2k	300	110C	6.0k	10m	180J	Si	DO9
37	300U120A	1.2k	300	120C	5.0k§	8.3m	200J	Si*	DO9⊠
38	301U120	1.2k	300	120C	6.2k	8.3m	200J	Si	DO9⊠
39	302U120A	1.2k	300	120C	5.0k	8.3m	200C	Si	DO9
40	303U120	1.2k	300	120C	5.9k	6.0m	200J	Si	S551
41	309U120	1.2k	300	120C	5.9k	6.0m	200J	Si	S467
42	S504120	1.2k	300	132C	5.0k	8.3m	190J	Si△	DO9⊠
43	S504120TS	1.2k	300	132C	5.0k	8.3m	190J	Si△	S464a
44	R620123000	1.2k	300	142C	5.5k	8.3m	190J	Si	C242
45	R6221230PS00	1.2k	300	150J	3.5k	5.0m	150	Si	C242
46	305U120	1.2k	300	155B	5.2k	10m	200A	Si	S467⊠
47	S30N1300JA4	1.2k	320	100C	4.5k§	10m	175J	Si△	M378
48	SKN240/12	1.2k	320	100C	5.0k	10m	180J	Si	DO9
49	SKR240/12	1.2k	320	100C	5.0k	10m	180J	Si	DO9
50	SKR320/12	1.2k	320	125C	8.0k	10m	180A	Si	S171p
51	ST20-120	1.2k	350	25A	7.0k		175J	Si	S203c⊠
52	300QD13	1.2k	350	82C	6.5k	10m	150J	Si	S531
53	DN262-12	1.2k	360	175J	4.0k	10m	175J	Si#	M771
54▼	SD300R12M	1.2k	380	100C	6.0k	10m	180J	Si	S506c
55▼	SD300R12P	1.2k	380	100C	6.0k	10m	180J	Si	S506c
56	SW12PHN300	1.2k	380	100C	5.5k§	10m	180J	Si	M1155⊠
57	403PJA120	1.2k	400	76C	4.0k	10m	150J	Si	M1246a
58	FD400DL24	1.2k	400	98C	10k§	8.3m	150J	Si△	C248zc
59	A397PB	1.2k	400	110	5.0k	8.3m	175	Si△	M771
60	NLA397PB	1.2k	400	110C	5.0k	8.3m	125J	Si	C242a
61	400QD21	1.2k	400	116C	6.5k	10m	150J	Si	C242e
62▼	SD400N12M	1.2k	400	120C	8.2k	10m	190J	Si	S506c
63▼	SD400N12P	1.2k	400	120C	8.2k	10m	190J	Si	S506c
64▼	SD400R12M	1.2k	400	120C	8.2k	10m	190J	Si	S506c
65▼	SD400R12P	1.2k	400	120C	8.2k	10m	190J	Si	S506c
66	SW12HHN400	1.2k	400	120C	7.5k§	10m	190J	Si	M1155⊠
67	SW12PHN400	1.2k	400	120C	7.5k§	10m	190J	Si	M1155⊠
68	R620124000	1.2k	400	128C	6.0k	8.3m	190J	Si	C242
69	SR400EL-24	1.2k	400	128C	10k§	8.3m	175J	Si△	S502
70	A390PB	1.2k	400	145	7.0k	8.3m	200J	Si△	M771
71	NLA390PB	1.2k	400	145C	7.0k		200J	Si	C242a
72	DF452-12	1.2k	400	150J	5.0k	10m	150J	Si#	M771
73	SKN320/12	1.2k	420	100C	8.0k	10m	180J	Si	S510
74▼	D428N1200	1.2k	430	100C	7.3k§	10m	150J	Si	M1346
75	DS430-12J	1.2k	430	100C	8.4k		150J	Si	S506b
76	FD600-12	1.2k	430	150J	5.5k	8.3m	190J	Si	M637a
77▼	D452N1200	1.2k	450	130C	13k§	10m	180J	Si	M1347
78▼	D452NR1200	1.2k	450	130C	13k§	10m	180J	Si	M1347
79	471PDA120	1.2k	470	105C	6.2k§	8.3m	200J	Si△	E200a
80	DS402ST12	1.2k	500	55C	4.5k§	10m	175C	Si	C248
81	501V120	1.2k	500	105C	8.0k§	8.3m	200J	Si△	S120g⊠
82	501VF120	1.2k	500	105C	8.0k	8.3m	200J	Si	S525
83	501VF120B	1.2k	500	105C	10k	8.3m	200J	Si	S525
84	503V120	1.2k	500	105C	8.0k		200J	Si	S563
85	R620125000	1.2k	500	112C	6.5k	8.3m	190J	Si	C242
86	501V120B	1.2k	500	120C	10k§	8.3m	200J	Si△	S120g⊠
87	501VR120	1.2k	500	120C	8.0k§	8.3m	200J	Si△	S120g⊠
88	701F12S	1.2k	500	130	9.0k		175J	Si△	S12b
89	501VR120B	1.2k	500	135C	10k§	8.3m	200J	Si△	S120g⊠
90	DN462-12	1.2k	540	175J	6.0k	10m	175J	Si#	M771
91	AR402P12	1.2k	575	55H	4.5k§	10m	175J	Si△	M1136§%
92	AR402S12	1.2k	575	55H	4.5k§	10m	175J	Si△	M1136♦%
93	A402DA	1.2k	600	60C	9.5k		150J	Si	C246b
94	FD500E24	1.2k	600	90C	10k§	8.3m	150J	Si△	C240d
95	1S2251	1.2k	600	93C	10k§	8.3m	150J	Si△	C240b
96	S904SXU12	1.2k	600	100C	9.0k§	10m	175J	Si	M759⊠
97	R720120600	1.2k	600	136C	7.0k	8.3m	200J	Si	C246f
98	DF652-12	1.2k	600	150J	9.0k	10m	150J	Si#	M1337
99	GD800-12	1.2k	640	150J	8.0k	8.3m	150J	Si	M637
100▼	SD300C12C	1.2k	650	55	6.0k	10m	180J	Si	DO200AA
101	S954SXU12	1.2k	680	100C	9.0k§	10m	175J	Si	M759⊠
102	703PJA120	1.2k	700	83C	9.0k	10m	150J	Si	M1246b
103	SKN500/12	1.2k	700	100C	7.0k	10m	180J	Si	C242b
104	250MA120	1.2k	700	101C	9.0k	10m	175J	Si	S12s
105	A437PB	1.2k	750	65	10k	8.3m	175C	Si△	C246b
106	A596PB	1.2k	750	70	10k	8.3m	130	Si	M463
107	SKID800/12	1.2k	800	40C	1.3k	10m	125J	Si	M1286
108▼	SD400C12C	1.2k	800	55	8.2k	10m	190J	Si	DO200AA
109	801F12H	1.2k	800	85	12k	20m	150J	Si	C241a
110▼	D798N1200	1.2k	800	100C	14k§	10m	150J	Si	M1346a
111	SW12KBN805	1.2k	800	100H	15k§	10m	175J	Si	M747⊠
112	SW12KBR805	1.2k	800	100H	17k	10m	175J	Si	S435j
113	1S2261	1.2k	800	101C	14k§	8.3m	150J	Si△	C239b
114	FD1000A24	1.2k	800	101C	14k§	8.3m	150J	Si△	C239a
115	801PDB120	1.2k	800	105C	8.0k§	8.3m	200J	Si	E200b
116	DF752-12	1.2k	800	150J	1.2k	10m	150J	Si#	M1337
117	DN662-12	1.2k	800	175J	12k	10m	175J	Si#	M1337
118	FD900-12	1.2k	800	190J	6.0k	8.3m	190J	Si	M637a
119	851PDE120L25	1.2k	850	75C	9.5k		150J	Si	M1277
120	851PDE120L30	1.2k	850	75C	9.5k		150J	Si	M1277
121	851PDE120L20	1.2k	850	78C	9.5k		150J	Si	M1277
122	S1104SXU12	1.2k	850	100C	16k§	10m	175J	Si	M759⊠
123	SKN870/12	1.2k	870	100C	105	10m	150J	Si	C246c
124	S951SXU12	1.2k	880	100C	16k§	10m	175J	Si	M759⊠
125	A620DA	1.2k	900	65	9.5k		150J	Si	C246b
126	R720120900	1.2k	900	110C	8.5k	8.3m	200J	Si	C246f
127	SW12KBR935	1.2k	935	100H	19k	10m	175J	Si	S435j
128	SW12KBN935	1.2k	936	100H	19k§	10m	175J	Si	M747⊠
129	DS804SE12	1.2k	1.0k	55H	9.0k		175J	Si	C248
130	801PDB120B	1.2k	1.0k	96C	10k§	8.3m	200J	Si	E200b
131	1001PDE120	1.2k	1.0k	107C			200J	Si△	M1277
132	A430PB	1.2k	1.0k	113C	10k	8.3m	200J	Si△	C246b
133	NLA430PB	1.2k	1.0k	113C	10k	8.3m	200J	Si	C246b
134	S1101SXU12	1.2k	1.01k	100C	25k	10m	175J	Si	M759⊠
135	1101PDK120	1.2k	1.1k	125C	22k	10m	200J	Si	C246d
136	DN762-12	1.2k	1.1k	175J	15k	10m	175J	Si#	M1337
137	DS904SM12	1.2k	1.11k	55C	9.0k§	10m	200S	Si△	C245b
138	AR904P12	1.2k	1150	55H	9.0k§	10m	175J	Si△	M1005§%
139	AR904S12	1.2k	1150	55H	9.0k§	10m	175J	Si△	M1005♦%
140	GD1400-12	1.2k	1.15k	190J	8.0k	8.3m	190J	Si	M637
141	R720121200	1.2k	1.2k	107C	12k	8.3m	200J	Si	C246f
142	A330PB	1.2k	1.2k	112C	11k		200J	Si△	M1147
143	1201PDE120	1.2k	1.2k	115C	13k		200J	Si△	M1277
144	HD1500-12	1.2k	1.2k	150J	18k	8.3m	150J	Si	M637c
145	R9G0121300	1.2k	1.3k	140C	16k	8.3m	190J	Si	C246e
146	A440PB	1.2k	1.5k	115C	21k		200J	Si△	C245e
147	AR1104P12	1.2k	1550	55H	175 §	10m	175J	Si△	M1005§%
148	AR1104S12	1.2k	1550	55H	175k§	10m	175J	Si△	M1005♦%
149	DS1104SM12	1.2k	1.55k	55C	16k§	10m	200S	Si△	M757
150	FD1600A24	1.2k	1.6k	91C	35k§	8.3m	150J	Si△	C244a
151	1601PDK120	1.2k	1.6k	105C	25k§	8.3m	200J	Si△	C245a
152	HD2100-12	1.2k	1.7k	150J	22k	8.3m	150J	Si	M637c
153	JD2300-12	1.2k	1.7k	150J	35k	8.3m	150J	Si	M946
154	A730PB	1.2k	1.8k	100C	25k		175J	Si	M1148
155	R9G0121800	1.2k	1.8k	115C	21k	8.3m	175J	Si	C246e
156	DN961-12	1.2k	1.9k	175J	27k	10m	175J	Si	C2460
157	DS2004SN12	1.2k	2.0k	55C	25k§	10m	180S	Si△	M954
158	A621PB	1.2k	2.0k	65C	25k		175J	Si	C246b
159	2001PDK120	1.2k	2.0k	105C	30 §	8.3m	200J	Si△	C245a
160	DS1101SM12	1.2k	2.1k	55H	25k	10m	175J	Si	M757
161	HD2500-12	1.2k	2.16k	190J	22k	8.3m	190J	Si	M637c
162	R9G0122200	1.2k	2.2k	120C	30k	8.3m	150J	Si	C246e
163	AR2004P12	1.2k	2250	55H	25k§	10m	175J	Si△	M1006§%
164	AR2004S12	1.2k	2250	55H	25k§	10m	175J	Si△	M1006♦%
165	A740PB	1.2k	2.4k	100C	32k		175J	Si	M1148
166	JD3000-12	1.2k	2.4k	150J	45k	8.3m	150J	Si	M946
167	2601PDN120	1.2k	2.6k	107C	40k§	8.3m	200J	Si△	C1002⊠
168	DS2002SN12	1.2k	2.8k	55H	33k	10m	175J	Si△	M954
169	3001PDN120	1.2k	3.0k	108C	50k§	8.3m	200J	Si△	C1001a⊠
170	JD4000-12	1.2k	3.0k	150J	50k	8.3m	150J	Si	M946
171	JD4500-12	1.2k	3.4k	150J	50k	8.3m	150J	Si	
172	RA201236XX00	1.2k	3.6k		40k		190J	Si	C246n
173	4001PDR120	1.2k	4.0k	105C	84k		175J	Si	C246o
174	10R13B	1.3k	.10	25	60		175	Si	
175	GU-1E	1.3k	300m	40	25	10m	110	Si△	A333
176	V30M	1.3k	400m	100L	30	10m	150J	Si	A313d
177	1N2778	1.3k	.75	25A	15		165S	Si	A145
178	75R13B	1.3k	.75	25	60		175	Si	
179	100R13B	1.3k	1.0	25	60		175	Si	
180	GH-1E	1.3k	1.0	25	35	10m	150	Si△	A333
181	BY133	1.3k	1.0 Ø	50A	50		150J	Si△	A1bg
182	GP10T	1.3k	1.0	55A	25		175	Si	DO41
183	TD-13	1.3k	1.0	60A	60	10m	140J	Si	A268b
184	P511	1.3k	1.0	75A	50	10m	150J	Si	A1bg
185	U30L	1.3k%	1.0	80L	50	10m	150J	Si	A94m
186	U31L	1.3k%	1.0	90L	30	10m	140J	Si	A94m
187	ER444	1.3k	1.0	100	50		175	Si	DO41
188	U32L	1.3k%	1.0	100L	50	10m	150J	Si	A94m
189	SKEA1/13	1.3k	1.2	45A	50	10m	150J	Si	M746a
190	SKSA1/13	1.3k	1.3	45A	150	10m	150J	Si	M746a
191	BY350-1300	1.3k	1.5		50	10m	140J	Si	A313l
192	150R13B	1.3k	1.5	25	60		175	Si	
193	GH-3E	1.3k	1.5	50	60	10m	150	Si△	A333b
194	SKBaB500C1400	1.3k	1.7	45A	75	8.3m	150J	Si	M1063a
195	200R13B	1.3k	2.0	25	60		175	Si	
196	SKNA2/13	1.3k	2.0	45A	150	10m	150J	Si	S452
197	250R13B	1.3k	2.5	25	250		175	Si	
198	SKEA2.5/13	1.3k	2.5	45A	160	10m	150J	Si	M571c
199	300R13B	1.3k	3.0	25	250		175	Si	
200	3A1300	1.3k	3.0	50	50	8.0m	150	Si	A298q
201	3A1300FS	1.3k	3.0	50	50	8.0m	150	Si	A298q
202	BY255	1.3k	3.0	50A	100	10m	150J	Si	DO27
203	D3-1300	1.3k	3	50L	80	10m	150J	Si	A422
204	350R13B	1.3k	3.5	25	250		175	Si	
205	SKNA4/13	1.3k	3.7	45A	160	10m	150J	Si	S352b
206	400R13B	1.3k	4.0	25	250		175	Si	
207	450R13B	1.3k	4.5	25	250		175	Si	
208	BY359-1300	1.3k	4.5	102A	60		125J	Si	TO220A
209	500R13B	1.3k	5.0	25	250		175	Si	
210	550R13B	1.3k	5.5	25	250		175	Si	
211	600R13B	1.3k	6.0	25	250		175	Si	
212	SKNA20/13	1.3k	19	100C	320	10m	150J	Si	S171s
213	PR5408	1.3k	20		100	10m		Si	A344ac
214	DFS80A13	1.3k	80	93C	1.6k	10m	150J	Si	M567⊠
215	101KL130S10	1.3k	100	60C	3.0k		125J	Si△	DO8
216	101KLR130S10	1.3k	100	70	3.0k		125J	Si△	DO8
217	DSS100A13	1.3k	100	90C	2.0k	10m	150J	Si	S567⊠
218	L08L	1.3k%	100	90C	2.0k	10m	150J	Si	S518
219	101KL130S25	1.3k	100	100C	3.0k		175J	Si△	DO8
220	A177PC	1.3k	100	100C	2.5k	8.3m	175J	Si△	S120j

SYMBOLS AND CODES EXPLAINED IN INTERPRETER

11. RECTIFIERS, HIGH VOLTAGE - PIV ≥ 1 kV (Cont'd)

IN ORDER OF: (1) PIV (2) IO MAX (3) @ TEMP & (4) TYPE NUMBER

LINE No.	4 TYPE NUMBER	1 PIV (V)	MAX AVG FWD DC CURRENT 2 Io MAX (A)	3 @ TEMP (°C)	MAX RATING SURGE CURR PEAK 1 Cy (A)	PULSE WIDTH (s)	MAX. TEMP (°C)	MAT	DRAWING NO.
1	L07L	1.3k%	100	104	2.0k	10m	125J	Si	S518
2	101KL130S15	1.3k	100	110C	3.0k		175J	Si△	DO8
3	101KLR130S15	1.3k	100	120	3.0k		175J	Si△	DO8
4	101KLR130S20	1.3k	100	120	3.0k		175J	Si△	DO8
5	101KLR130S25	1.3k	100	120	3.0k		175J	Si△	DO8
6	101KLR130S30	1.3k	100	120	3.0k		175J	Si△	DO8
7	A170PC	1.3k	100	130C	2.5k	8.3m	200J	Si△	S120j⊠
8	A187PC	1.3k	150	50C	2.8k	8.3m	125J	Si△	S120j⊠
9	A180PC	1.3k	150	143C	3.4k	8.3m	200J	Si△	S120j⊠
10	J11L	1.3k%	200	55	2.0k	10m	125J	Si	C248b
11	S20N1400JA	1.3k	210	100C	4.5k§	10m	150J	Si△	M378
12	S20P1400JA	1.3k	220	100C	4.0k§	10m	175J	Si△	M378
13	DFS250A13	1.3k	250	54C	5.0k	10m	125J	Si	M568⊠
14	A197PC	1.3k	250	110C	5.0k	8.3m	175J	Si△	S435a⊠
15	A190PC	1.3k	250	144C	6.5k	8.3m	200J	Si△	S435a⊠
16	A399PC	1.3k	275	80C	6.0k		150J	Si	M1147
17	H01M	1.3k	300	78C	5.5k	10m	150J	Si	S516
18	DSS300A13	1.3k	300	79C	6.0k	10m	150J	Si	S568⊠
19	S30N1400JA4	1.3k	320	100C	4.5k§	10m	175J	Si△	M378
20	A397PC	1.3k	400	110	5.0k	8.3m	175	Si△	M771
21	NLA397PC	1.3k	400	110C	5.0k	8.3m	125J	Si	C242a
22	A390PC	1.3k	400	145	7.0k	8.3m	200J	Si△	M771
23	NLA390PC	1.3k	400	145C	7.0k		200J	Si	C242a
24	A402DB	1.3k	600	60C	9.5k		150J	Si	C246b
25	S904SXU13	1.3k	600	100C	9.0k§	10m	175J	Si	M759⊠
26	S954SXU13	1.3k	680	100C	9.0k§	10m	175J	Si	M759⊠
27	A437PC	1.3k	750	65	10k	8.3m	175C	Si△	C246b
28	A596PC	1.3k	750	70	10k	8.3m	130	Si	M463
29	851PDE130L30	1.3k	850	75C	9.5k		150J	Si	M1277
30	851PDE130L20	1.3k	850	78C	9.5k		150J	Si	M1277
31	851PDE130L25	1.3k	850	78C	9.5k		150J	Si	M1277
32	S1104SXU13	1.3k	850	100C	16k§	10m	175J	Si	M759⊠
33	A620PC	1.3k	900	65	9.5k		150J	Si	C246b
34	DS804SE13	1.3k	1.0k	55H	9.0k		175J	Si	C248
35	A430PC	1.3k	1.0k	113C	10k	8.3m	200J	Si△	C246b
36	NLA430PC	1.3k	1.0k	113C	10k	8.3m	200J	Si	C246b
37	DS904SM13	1.3k	1.11k	55C	9.0k§	10m	200S	Si△	C245b
38	AR904P13	1.3k	1150	55H	9.0k§	10m	175J	Si△	M1005§%
39	AR904S13	1.3k	1150	55H	9.0k§	10m	175J	Si△	M1005♦%
40	A330PC	1.3k	1.2k	112C	11k		200J	Si△	M1147
41	SKN1500/12	1.3k	1.27k	100C	16k	10m	175C	Si	C246h
42	A440PC	1.3k	1.5k	115C	21k		200J	Si△	C245e
43	AR1104P13	1.3k	1550	55H	175 §	10m	175J	Si△	M1005§%
44	AR1104S13	1.3k	1550	55H	175k§	10m	175J	Si△	M1005♦%
45	DS1104SM13	1.3k	1.55k	55C	16k§	10m	200S	Si△	M757
46	SKN2000/12	1.3k	1.65k	100C	25k	10m	175C	Si	C246l
47	A730PC	1.3k	1.8k	100C	25k		175J	Si	M1148
48	DS2004SN13	1.3k	2.0k	55C	25k§	10m	180S	Si△	M954
49	AR2004P13	1.3k	2250	55H	25k§	10m	175J	Si△	M1006§%
50	AR2004S13	1.3k	2250	55H	25k§	10m	175J	Si△	M1006♦%
51	A740PC	1.3k	2.4k	100C	32k		175J	Si	M1148
52	DS2002SN13	1.3k	2.8k	55H	33k	10m	175J	Si△	M954
53	JD4000-13	1.3k	3.0k	150J	50k	8.3m	150J	Si	M946
54	10R14B	1.4k	.10	25	60		175	Si	
55	dc5V4	1.4k	150m	35A	50		125A	Si	M1195a
56	dc5Z4	1.4k	150m	35A	50		125A	Si	M1195a
57	dc80	1.4k	150m	35A	50		125A	Si	M1194
58	1N2884	1.4k	250m	25A			150S	Si	M122a
59	1N2885	1.4k	250m	25A			150S	Si	A83w
60	dc5Y3	1.4k	350m	35A	50		125A	Si	M1195a
61	1N2357	1.4k	.40	25$	15		150	Si	DO1
62	RA-1E	1.4k	600m	50A	25	10m	130J	Si	A334
63	SH-1E	1.4k	600m	50A	30	10m	130J	Si	A271
64	1N2779	1.4k	.75	25A	15		165S	Si	A145
65	75R14B	1.4k	.75	25	60		175	Si	
66	1N3725	1.4k	.75	50A	12		175A	Si	A1bp
67	BY268	1.4k	800m	25A	20	10m	175S	Si§	A249a
68	1N2362	1.4k	1.0	25C	15		150	Si	DO4
69	1N2363	1.4k	1.0	25	15		150	Si	S117
70	100R14B	1.4k	1.0	25	60		175	Si	
71	PR141	1.4k	1.0	40A	20	10m	125J	Si	Albg
72	VGB0124AY7A	1.4k	1.0	45A	70	10m	150J	Si	
73	GP10V	1.4k	1.0	55A	25		175	Si	DO41
74	DS0.9-14A	1.4k	1.2	45A	70 §	10m	150J	Si	M841
75	DSA0.9-14A	1.4k	1.2	45A	70 §	10m	150J	Si	M841
76	SSiB9880A	1.4k	1.2	45A		10m	150J	Si△	M571a
77	DSA1.2-14A	1.4k	1.4	45A	75 §	10m	150J	Si	A9p
78	BYX45-1400R	1.4k	1.5		40	10m	150J	Si△	DO1⊠
79	150R14B	1.4k	1.5	25	60		175	Si	
80	DSA2-14A	1.4k	1.5	45A	120 §	10m	150J	Si	A9q
81	DS1.2-14A	1.4k	1.7	45A	75 §	10m	180J	Si	A9p
82	SSiC9980A	1.4k	1.7	45A		10m	150J	Si△	M571
83	DS2-14A	1.4k	1.8	45A	120 §	10m	180J	Si	A9q
84	200R14B	1.4k	2.0	25	60		175	Si	
85	250R14B	1.4k	2.5	25	250		175	Si	
86	VBO2.2-14N02	1.4k	2.7	50C	70	10m		Si	
87	VBO2.2-14N04	1.4k	2.7	50C	70	10m		Si	
88	VBO2.2-14N05	1.4k	2.7	50C	70	10m		Si	
89	VBO2.2-14N06	1.4k	2.7	50C	70	10m		Si	
90♦	SR0314	1.4k	3.0					Si	D04
91	300R14B	1.4k	3.0	25	250		175	Si	
92	350R14B	1.4k	3.5	25	250		175	Si	
93	400R14B	1.4k	4.0	25	250		175	Si	
94	450R14B	1.4k	4.5	25	250		175	Si	
95	SSiD9980A	1.4k	4.7	45A		10m	150J	Si△	S344
96	1N2362A	1.4k	5.0	25A	20		150	Si	DO4
97	1N2363A	1.4k	5.0	25	20		150	Si	S117
98	500R14B	1.4k	5.0	25	250		175	Si	
99	550R14B	1.4k	5.5	25	250		175	Si	
100	600R14B	1.4k	6.0	25	250		175	Si	
101♦	D6/1400A	1.4k	6.0	100C	120 §	10m	150J	Si	A231
102	DA6-1400	1.4k	9.0	95C	120	10m	150J	Si	A31u
103	BYX39-1400	1.4k	9.5	85A	125	10m	175J	Si	DO4⊠
104	1N2362B	1.4k	10	25B	25		150	Si	DO4
105	1N2363B	1.4k	10	25C	25		150	Si	S117
106▼	D10N1400B	1.4k	10	100C	170 §	10m	150J	Si	S493c
107▼	D10N1400C	1.4k	10	100C	170 §	10m	150J	Si	S493b
108	DSA6-14F	1.4k	10	100C	180	10m	150J	Si	
109	DSA6-16F	1.4k	10	100C	180	10m	150J	Si	
110	DS6-14F	1.4k	10	130C	180	10m	180J	Si	
111	DSA9-14F	1.4k	11	120C	250	10m	150J	Si	
112	DS9-14F	1.4k	11	150C	250	10m	180J	Si	
113♦	SR1214A	1.4k	12					Si	D04
114♦	SR1614	1.4k	16					Si	D04
115	FC14G	1.4k	17	85C	300		125J	Si	M1288a
116	SW14PCN012	1.4k	17	100C	210 §	10m	150J	Si	DO4⊠
117	SKKD15-14	1.4k	17.5	96C	320	10m	125J	Si	M1055
118	SKKE15-14	1.4k	17.5	96C	320	10m	125J	Si	M1056
119	BYX25-1400	1.4k	20		360	10m	175J	Si△	DO4⊠
120	SSiE2080A	1.4k	20	85C	250	10m	160J	Si△	S4p△
121	SKR26/14	1.4k	20	125C	350	8.3m	180A	Si	DO4
122▼	D24N1400B	1.4k	24	100C	510 §	10m	150J	Si	S493e
123▼	D24N1400C	1.4k	24	100C	510 §	10m	150J	Si	S493d
124▼	D24N1400U	1.4k	24	100C	510 §	10m	150J	Si	S493d
125▼	D24NR1400B	1.4k	24	100C	510 §	10m	150J	Si	S493e
126▼	D24NR1400C	1.4k	24	100C	510 §	10m	150J	Si	S493d
127▼	D24NR1400U	1.4k	24	100C	510 §	10m	150J	Si	S493d
128♦	SR2514	1.4k	25					Si	D05
129	DS17-14A	1.4k	25	45A	300 §	10m	190J	Si	S4v⊠
130	DSA17-14A	1.4k	25	100C	300 §	10m	190J	Si	S4v⊠
131	SKN20/14	1.4k	25	100C	320	10m	180J	Si	S171s⊠
132	SKR20/14	1.4k	25	100C	350	8.3m	180A	Si	DO4
133	SKN26/14	1.4k	25	125C	320	10m	180J	Si	DO4
134♦	BYX96-1400	1.4k	30					Si	D04
135	VBO13-14N01	1.4k	30	30C	220	10m	150J	Si	
136	SW14PCN030	1.4k	30	125C	350 §	10m	175J	Si	DO4⊠
137	DD22S1400	1.4k	32	64C	390	10m	150J	Si	20
138	MDD25-14N1	1.4k	32	80C	450	10m		Si	
139	DSA22-14A	1.4k	33	45A	450 §	10m	150J	Si	S408c
140▼	D34N1400B	1.4k	34	100C	550 §	10m	150J	Si	S493e
141▼	D34N1400C	1.4k	34	100C	550 §	10m	150J	Si	S493d
142▼	D34N1400U	1.4k	34	100C	550 §	10m	150J	Si	S493d
143▼	D34NR1400B	1.4k	34	100C	550 §	10m	150J	Si	S493e
144▼	D34NR1400C	1.4k	34	100C	550 §	10m	150J	Si	S493d
145▼	D34NR1400U	1.4k	34	100C	550 §	10m	150J	Si	S493d
146♦	SR3514	1.4k	35					Si	D05
147	DD31S1400	1.4k	38	82C	470	10m	150J	Si	20
148	D24/1400B	1.4k	38	83C	510	10m	150J	Si	S493a
149	D24/1400C	1.4k	38	83C	510	10m	150J	Si	S493
150	DD31N1400	1.4k	38	83C	550	10m	150J	Si	20
151♦	SR4014	1.4k	40					Si	D05
152	VBO20-14N01	1.4k	40	55C	300	10m	150J	Si	
153	10MA140	1.4k	40	104C	800	10m	130J	Si	S527a
154▼	SD040N14P	1.4k	40	146C	600	10m	180J	Si	DO5
155▼	SD040R14P	1.4k	40	146C	600	10m	180J	Si	DO5
156▼	SD041N14P	1.4k	40	146C	600	10m	180J	Si	S567a
157	DS22-14A	1.4k	42	45A	450 §	10m	180J	Si	S408c
158	DSA35-14A	1.4k	42	45A	650 §	10m	150J	Si	S19u⊠
159	SKKD46-14	1.4k	45	86C	700		125J	Si	Y240
160	BYX56-1400	1.4k	48	112A	800	10m	175J	Si	DO5⊠
161	KGD1424SX	1.4k	50	45A	250	10m		Si	M1086
162	SKR1M40/14	1.4k	50	97C	700	10m	150J	Si	DO5
163	SKN45/14	1.4k	50	100C	700	10m	180J	Si	S171y⊠
164	SKN46/14	1.4k	50	100C	600	10m	180J	Si	DO5
165	SKR45/14	1.4k	50	100C	600	10m	180J	Si	DO5
166	SKR46/14	1.4k	50	100C	600	10m	180J	Si	DO5
167	DS35-14A	1.4k	52	45A	650 §	10m	180J	Si	S19u⊠
168	D34/1400B	1.4k	54	88C	550	10m	150J	Si	S493a
169	D34/1400C	1.4k	54	88C	550	10m	150J	Si	S493
170♦	SR6014	1.4k	60					Si	D05
171	DSA42-14A	1.4k	60	45A	1.1k§	10m	150J	Si	S408d
172▼	D60N1400B	1.4k	60	100C	1.3k§	10m	150J	Si	S567a
173▼	D60N1400C	1.4k	60	100C	1.3k§	10m	150J	Si	S571
174▼	D60N1400U	1.4k	60	100C	1.3k§	10m	150J	Si	S571
175▼	D60NR1400B	1.4k	60	100C	1.3k§	10m	150J	Si	S567a
176▼	D60NR1400C	1.4k	60	100C	1.3k§	10m	150J	Si	S571
177▼	D60NR1400U	1.4k	60	100C	1.3k§	10m	150J	Si	S571
178	SA14PCN061	1.4k	60	100C	1.0k§	10m	150J	Si△	DO5⊠
179	20MA140	1.4k	60	108C	950	10m	150J	Si	S527a
180	DSA75-14B	1.4k	60	115C	1.2k§	10m	150J	Si	S465c⊠
181	MDD42-14N1	1.4k	64	94C	1.1k	10m	150J	Si	
182	DS42-14A	1.4k	65	45A	1.1k§	10m	180J	Si	S408d
183	D60/1400B	1.4k	65	94C	.80k	10m	150J	Si	S171g%
184	70HF140	1.4k	70		1.1k§	8.3m	180J	Si△	DO5⊠
185♦	SR7014	1.4k	70					Si	D05
186	KGB0524SX	1.4k	70	45A	600	10m		Si	M1087
187	SW14PCN040	1.4k	70	100C	650 §	10m	175J	Si	DO5⊠
188	70HFR140	1.4k	70	110C	1.2k		140C	Si	DO5
189	DS75-14B	1.4k	70	115C	1.1k§	10m	180J	Si	S465e⊠
190▼	SD070N14P	1.4k	70	140C	1.1k	10m	180J	Si	DO5
191▼	SD070R14P	1.4k	70	140C	1.1k	10m	180J	Si	DO5
192♦	SD071N14P	1.4k	70	140C	1.1k	10m	180J	Si	S481
193♦	SD071R14P	1.4k	70	140C	1.1k	10m	180J	Si	S481
194	SW14PCN075	1.4k	75	135C	1.3k§	10m	175	Si	DO5⊠
195	DD65N1400	1.4k	76	88C	1.6k	10m	150J	Si	20
196	DSA80-14A	1.4k	80	45A	2.1k§	10m	150J	Si	S408e⊠
197	KGD1524SX	1.4k	80	45A	600	10m		Si	M1087
198	SKKD81-14	1.4k	80	87C	2.0k		125J	Si	Y240
199	SKKE81-14	1.4k	80	87C	2.0k		125J	Si	Y240
200	85HF140	1.4k	85	110C	1.4k	6.0m	180J	Si	DO5
201	85HFR140	1.4k	85	110C	1.8k		140C	Si	DO5
202	DSAI75-14B	1.4k	85	115C	1.0k§	10m	180J	Si	S465b
203	DD85N1400	1.4k	89	96C	1.9k	10m	150J	Si	20
204▼	SD090N14P	1.4k	90	135C	1.5k	10m	180J	Si	DO5
205▼	SD090R14P	1.4k	90	135C	1.5k	10m	180J	Si	DO5
206▼	SD091N14P	1.4k	90	135C	1.5k	10m	180J	Si	S481
207▼	SD091R14P	1.4k	90	135C	1.5k	10m	180J	Si	S481
208	SKN70/14	1.4k	95	100C	1.0k	10m	180J	Si	S481
209	SKN71/14	1.4k	95	100C	1.0k	10m	180J	Si	DO5
210	SKR70/14	1.4k	95	100C	1.0k	10m	180J	Si	DO5
211	SKR71/14	1.4k	95	100C	1.0k	10m	180J	Si	DO5
212▼	D121NR1400B	1.4k	98	130C	2.7k§	10m	180J	Si	S532a
213▼	D121NR1400V	1.4k	98	130C	2.7k§	10m	180J	Si	S532a
214	101KL140S10	1.4k	100	60C	3.0k		125J	Si△	DO8
215	101KLR140S10	1.4k	100	70	3.0k		125J	Si△	DO8
216	101KL140S25	1.4k	100	100C	3.0k		175J	Si△	DO8
217	A177PD	1.4k	100	100C	2.5k	8.3m	175J	Si△	S120j
218▼	D75N1400B	1.4k	100	100C	1.6k§	10m	150J	Si	S567a
219▼	D75N1400C	1.4k	100	100C	1.6k§	10m	150J	Si	S571
220▼	D75N1400U	1.4k	100	100C	1.6k§	10m	150J	Si	S571

SYMBOLS AND CODES EXPLAINED IN INTERPRETER

11. RECTIFIERS, HIGH VOLTAGE - PIV ≥ 1 kV (Cont'd)

IN ORDER OF: (1) PIV (2) IO MAX (3) @ TEMP & (4) TYPE NUMBER

LINE No.	4 TYPE NUMBER	1 PIV (V)	MAX AVG FWD DC CURRENT 2 Io MAX (A)	3 @ TEMP (°C)	MAX RATING SURGE CURR PEAK 1 Cy (A)	PULSE WIDTH (s)	MAX. TEMP (°C)	MAT	DRAWING NO.
1▼	D75NR1400B	1.4k	100	100C	1.6k§	10m	150J	Si	S567a
2▼	D75NR1400C	1.4k	100	100C	1.6k§	10m	150J	Si	S571
3▼	D75NR1400U	1.4k	100	100C	1.6k§	10m	150J	Si	S571
4	KU1014	1.4k	100	100C	1.8k	10m	150J	Si	S421
5	KU1514	1.4k	100	100C	2.5k	10m	150J	Si	S421
6	SKN2M100/14	1.4k	100	100C	1.5k	10m	150J	Si	DO30
7	SKR2M100/14	1.4k	100	100C	1.5k	10m	150J	Si	DO30
8	101KL140S15	1.4k	100	110C	3.0k		175J	Si△	DO8
9	101KL140S20	1.4k	100	110C	3.0k		175J	Si	DO8
10	SR100AM28	1.4k	100	110C	3.0k	8.3m	150J	Si	S435b
11	101KLR140S15	1.4k	100	120	3.0k		175J	Si△	DO8
12	101KLR140S20	1.4k	100	120	3.0k		175J	Si△	DO8
13	101KLR140S25	1.4k	100	120	3.0k		175J	Si△	DO8
14	101KLR140S30	1.4k	100	120	3.0k		175J	Si△	DO8
15	1N3297	1.4k	100	130C	1.6k	8.3m	200C	Si	DO8
16	1N3297A	1.4k	100	130C	2.3k		200C	Si	DO8
17	A170PD	1.4k	100	130C	2.5k	8.3m	200J	Si△	S120j⊠
18	DS80-14A	1.4k	110	45A	2.1k§	10m	180J	Si	S408e⊠
19	DSA110-14A	1.4k	110	100C	2.8k§	10m	150A	Si	S408e⊠
20▼	D121N1400B	1.4k	120	100C	3.0k§	10m	180J	Si	S532a
21▼	D121N1400V	1.4k	120	100C	3.0k§	10m	180J	Si	S532a
22	KGB0614SX	1.4k	125	45A	1.8k	10m		Si	M1088
23	SKN100/14	1.4k	125	100C	1.5k	10m	180J	Si	DO8
24	SKR100/14	1.4k	125	100C	1.5k	10m	180J	Si	DO30
25	KU1314	1.4k	130	100C	2.3k	10m	150J	Si	S421
26	KGD1614SX	1.4k	150	45A	1.8k	10m		Si	M1088
27	A187PD	1.4k	150	50C	2.8k	8.3m	125J	Si△	S120j⊠
28	45MA140	1.4k	150	76C	1.7k	10m	150J	Si	S435g
29	1N4596	1.4k	150	110	3.0k		200A	Si	DO8⊠
30▼	SD150N14M	1.4k	150	125C	3.6k	10m	180J	Si	S569
31▼	SD150N14P	1.4k	150	125C	3.6k	10m	180J	Si	S569
32▼	SD150R14M	1.4k	150	125C	3.6k	10m	180J	Si	S569
33▼	SD150R14P	1.4k	150	125C	3.6k	10m	180J	Si	S569
34	SW14PHN151	1.4k	150	125C	3.2k	10m	180J	Si	S435j
35	A180PD	1.4k	150	143C	3.4k	8.3m	200J	Si△	S120j⊠
36	ST16-140	1.4k	150	150C	3.0k	4.0m	200C	Si	S128b⊠
37	DS110-14A	1.4k	160	75C	3.2k§	10m	180J	Si	S408e
38	1N3275	1.4k	160	125C	2.0k		190J	Si	DO9
39	SKN130/14	1.4k	165	100C	2.0k	10m	180J	Si	DO8
40	SKR130/14	1.4k	165	100C	2.0k	10m	180J	Si	DO30
41	KGB0714SX	1.4k	170	45A	2.8k	10m		Si	M1088
42	DS175-14L	1.4k	182	100C	2.8k§	10m	150J	Si	S506d⊠
43	IRKD200-14	1.4k	200	25J	9.0k		125J	Si	M1274 *
44	IRKD240-14	1.4k	200	25J	10k		125J	Si	M1274c*
45	IRKE200-14	1.4k	200	25J	9.0k		125J	Si	M1274a
46	IRKE240-14	1.4k	200	25J	10k		125J	Si	M1274b
47	SV2014	1.4k	200	100C	4.0k	10m	150J	Si	DO8
48▼	SD200N14M	1.4k	200	110C	4.7k	10m	180J	Si	S569
49▼	SD200N14P	1.4k	200	110C	4.7k	10m	180J	Si	S569
50▼	SD200R14M	1.4k	200	110C	4.7k	10m	180J	Si	S569
51♦	SD200R14P	1.4k	200	110C	4.7k	10m	180J	Si	S569
52	SW14PHN201	1.4k	200	110C	4.2k	10m	180J	Si	S435j
53	KGD1714SX	1.4k	210	45A	2.8k	10m		Si	M1088
54	S20N1500JA	1.4k	210	100C	4.5k§	10m	150J	Si△	M378
55	S20P1500JA	1.4k	220	100C	4.0k§	10m	175J	Si△	M378
56	SR200DM28R	1.4k	240	75C	5.0k	8.3m	150J	Si△	S435c
57	SR200DM-28S	1.4k	240	75C	5.0k§	8.3m	150J	Si△	S435
58	1N3176	1.4k	240	100C	3.0k		150J	Si	DO9
59	FD250DM28	1.4k	240	105C	5.0k§	8.3m	150J	Si△	C248a
60	253PJA140	1.4k	250	73C	2.7k	10m	150J	Si	M1246
61	70MA140	1.4k	250	74C	4.0k	10m	150J	Si	S12r
62	SSiL20100A	1.4k	250	94C	4.8k	10m	160J	Si△	S345
63▼	D251NR1400B	1.4k	250	100C	5.5k§	10m	180J	Si	S532b
64▼	D251NR1400E	1.4k	250	100C	5.5k§	10m	180J	Si	M1348
65	A197PD	1.4k	250	110C	5.0k	8.3m	175J	Si△	S435a⊠
66	DF451-14	1.4k	250	125J	3.5k	10m	125J	Si#	M771
67	1N3744	1.4k	250	130C	4.5k	8.3m	200C	Si	DO9⊠
68▼	D251N1400B	1.4k	250	130C	6k§	10m	180J	Si	S532b
69▼	D251N1400E	1.4k	250	130C	6k§	10m	180J	Si	M1348
70▼	D251N1400V	1.4k	250	130C	6k§	10m	180J	Si	S532b
71	A190PD	1.4k	250	144C	6.5k	8.3m	200J	Si△	S435a⊠
72	DF252-14	1.4k	270	150J	3.0k	10m	150J	Si#	M771
73	A399PD	1.4k	275	80C	6.0k		150J	Si	M1147
74	DS290-14J	1.4k	290	100C	4.7k§		150J	Si	S506⊠
75	D250/1400E	1.4k	300	85C	5.3k	10m	150J	Si	M486
76	DSA304-14A	1.4k	300	100C	4.3k§	10m	150J	Si	C240e
77	TV3014	1.4k	300	110C	6.0k	10m	180J	Si	DO9
78	301U140	1.4k	300	120C	6.2k	8.3m	200J	Si	DO9⊠
79	303U140	1.4k	300	120C	5.9k	6.0m	200J	Si	S551
80	309U140	1.4k	300	120C	5.9k	6.0m	200J	Si	S467
81	R620143000	1.4k	300	138C	5.5k	8.3m	175J	Si	C242
82	S30N1500JA4	1.4k	320	100C	4.5k§	10m	175J	Si△	M378
83	SKN240/14	1.4k	320	100C	5.0k	10m	180J	Si	DO9
84	SKR240/14	1.4k	320	100C	5.0k	10m	180J	Si	DO9
85	ST20-140	1.4k	350	25A	7.0k		175J	Si	S203c⊠
86	DN262-14	1.4k	360	175J	4.0k	10m	175J	Si#	M771
87▼	SD300R14M	1.4k	380	100C	6.0k	10m	180J	Si	S506c
88▼	SD300R14P	1.4k	380	100C	6.0k	10m	180J	Si	S506c
89	SW14HHN300	1.4k	380	100C	55k§	10m	180J	Si	M1155⊠
90	SW14PHN300	1.4k	380	100C	5.5k§	10m	180J	Si	M1155⊠
91	403PJA140	1.4k	400	76C	4.0k	10m	150J	Si	M1246a
92	DSA400-14NC	1.4k	400	98C	9.8k	10m	150J	Si	
93	SR400FH-28	1.4k	400	98C	10k§	8.3m	150J	Si△	S502a
94	A397PD	1.4k	400	110	5.0k	8.3m	175	Si△	M771
95	NLA397PD	1.4k	400	110C	5.0k	8.3m	125J	Si	C242a
96	R620144000	1.4k	400	112C	6.0k	8.3m	175J	Si	C242
97▼	SD400N14M	1.4k	400	120C	8.2k	10m	190J	Si	S506c
98▼	SD400N14P	1.4k	400	120C	8.2k	10m	190J	Si	S506c
99▼	SD400R14M	1.4k	400	120C	8.2k	10m	190J	Si	S506c
100▼	SD400R14P	1.4k	400	120C	8.2k	10m	190J	Si	S506c
101	SW14HHN400	1.4k	400	120C	7.5k§	10m	190J	Si	M1155⊠
102	SW14PHN400	1.4k	400	120C	7.5k§	10m	190J	Si	M1155⊠
103	A390PD	1.4k	400	145	7.0k	8.3m	200J	Si△	M771
104	NLA390PD	1.4k	400	145C	7.0k		200J	Si	C242a
105	DF452-14	1.4k	400	150J	5.0k	10m	150J	Si#	M771
106	SKN320/14	1.4k	420	100C	8.0k	10m	180J	Si	S510
107	SKR320/14	1.4k	420	100C	8.0k	10m	180J	Si	DO9
108▼	D428N1400	1.4k	430	100C	7.3k§	10m	150J	Si	M1346
109	DS430-14J	1.4k	430	100C	8.4k		150J	Si	S506b
110	FD600-14	1.4k	430	150J	5.5k	8.3m	190J	Si	M637a
111	DSA400-14KC	1.4k	450	90C	9.8k	10m	105J	Si	M1214
112	DSA603-14GC	1.4k	450	119C	14k	10m	150J	Si	M1215
113	DSA603-14L1C	1.4k	450	119C	14k	10m	150J	Si	M1215
114▼	D452N1400	1.4k	450	130C	13k§	10m	180J	Si	M1347
115▼	D452NR1400	1.4k	450	130C	13k§	10m	180J	Si	M1347
116	471PDA140	1.4k	470	105C	6.2k§	8.3m	200J	Si△	E200a
117	S1084	1.4k	500	55	50	8.3		Si	M204h
118	501V140	1.4k	500	105C	8.0k§	8.3m	200J	Si△	S120g⊠
119	501VF140	1.4k	500	105C	8.0k	8.3m	200J	Si	S525
120	501VF140B	1.4k	500	105C	10k	8.3m	200J	Si	S525
121	503V140	1.4k	500	105C	8.0k		200J	Si	S563
122	501V140B	1.4k	500	120C	10k§	8.3m	200J	Si△	S120g⊠
123	501VR140	1.4k	500	120C	8.0k§	8.3m	200J	Si△	S120g⊠
124	701F14S	1.4k	500	130	9.0k		175J	Si△	S12b
125	501VR140B	1.4k	500	135C	10k§	8.3m	200J	Si△	S120g⊠
126	DN462-14	1.4k	540	175J	6.0k	10m	175J	Si#	M771
127	A402DC	1.4k	600	60C	9.5k		150J	Si	C246b
128	FD500E28	1.4k	600	90C	10k§	8.3m	150J	Si△	C240d
129	FD500DH28	1.4k	600	100C	11k§	8.3m	150J	Si△	M1344
130	S904SXU14	1.4k	600	100C	9.0k§	10m	175J	Si	M759⊠
131	R720140600	1.4k	600	110C	7.0k	8.3m	175J	Si	C246f
132	DF652-14	1.4k	600	150J	9.0k	10m	150J	Si#	M1337
133	GD800-14	1.4k	640	150J	8.0k	8.3m	150J	Si	M637
134▼	SD300C14C	1.4k	650	55	6.0k	10m	180J	Si	DO200AA
135	S954SXU14	1.4k	680	100C	9.0k§	10m	175J	Si	M759⊠
136	703PJA140	1.4k	700	83C	9.0k	10m	150J	Si	M1246b
137	SKN500/14	1.4k	700	100C	7.0k	10m	180J	Si	C242b
138	250MA140	1.4k	700	101C	9.0k	10m	175J	Si	S12s
139	A437PD	1.4k	750	65	10k	8.3m	175C	Si△	C246b
140	A596PD	1.4k	750	70	10k	8.3m	130	Si	M463
141	SKID800/14	1.4k	800	40C	1.3k	10m	125J	Si	M1286
142▼	SD400C14C	1.4k	800	55	8.2k	10m	190J	Si	DO200AA
143▼	D798N1400	1.4k	800	100C	14k§	10m	150J	Si	M1346a
144	SW14KBN805	1.4k	800	100H	15k§	10m	175J	Si	M747⊠
145	SW14KBR805	1.4k	800	100H	17k	10m	175J	Si	S435j
146	FD1000A28	1.4k	800	101C	14k§	8.3m	150J	Si△	C239a
147	801PDB140	1.4k	800	105C	8.0k§	8.3m	200J	Si	E200b
148	DF752-14	1.4k	800	150J	1.2k	10m	150J	Si#	M1337
149	DN662-14	1.4k	800	175J	12k	10m	175J	Si#	M1337
150	FD900-14	1.4k	800	190J	6.0k	8.3m	190J	Si	M637a
151	851PDE140L30	1.4k	850	75C	9.5k		150J	Si	M1277
152	851PDE140L20	1.4k	850	78C	9.5k		150J	Si	M1277
153	851PDE140L25	1.4k	850	78C	9.5k		150J	Si	M1277
154	S1104SXU14	1.4k	850	100C	16k§	10m	175J	Si	M759⊠
155	A620DC	1.4k	900	65	9.5k		150J	Si	C246b
156	R720140900	1.4k	900	85C	8.5k	8.3m	175J	Si	C246f
157▼	ZZZZD900A	1.4k	999						
158▼	ZZZZD900B	1.4k	999						
159▼	ZZZZD900C	1.4k	999						
160	DS804SE14	1.4k	1.0k	55H	9.0k		175J	Si	C248
161	801PDB140B	1.4k	1.0k	96C	10k§	8.3m	200J	Si	E200b
162	1001PDE140	1.4k	1.0k	107C			200J	Si△	M1277
163	A430PD	1.4k	1.0k	113C	10k	8.3m	200J	Si△	C246b
164	NLA430PD	1.4k	1.0k	113C	10k	8.3m	200J	Si	C246b
165	1101PDK140	1.4k	1.1k	125C	22k	10m	200J	Si	C246d
166	DN762-14	1.4k	1.1k	175J	15k	10m	175J	Si#	M1337
167	DS904SM14	1.4k	1.11k	55C	9.0k§	10m	200S	Si△	C245b
168	AR904P14	1.4k	1150	55H	9.0k§	10m	175J	Si△	M1005§%
169	AR904S14	1.4k	1150	55H	9.0k§	10m	175J	Si△	M1005♦%
170	GD1400-14	1.4k	1.15k	190J	8.0k	8.3m	190J	Si	M637
171	A330PD	1.4k	1.2k	112C	11k		200J	Si△	M1147
172	1201PDE140	1.4k	1.2k	115C	13k		200J	Si△	M1277
173	HD1500-14	1.4k	1.2k	150J	18k	8.3m	150J	Si	M637c
174	DSA705-14AC	1.4k	1.3k	26C	14k	10m	150J	Si	M953
175	R9G0141300	1.4k	1.3k	125C	16k	8.3m	190J	Si	C246e
176	A641PD	1.4k	1.5k	65C	17k		175J	Si	C246b
177	A440PD	1.4k	1.5k	115C	21k		200J	Si△	C245e
178	DSA1508-14AC	1.4k	1520	100	29k	8.3m	150	Si	M246l
179	AR1104P14	1.4k	1550	55H	175 §	10m	175J	Si△	M1005§%
180	AR1104S14	1.4k	1550	55H	175k§	10m	175J	Si△	M1005♦%
181	DS1104SM14	1.4k	1.55k	55C	16k§	10m	200S	Si△	M757
182	FD1600A28	1.4k	1.6k	91C	35k§	8.3m	150J	Si△	C244a
183	1601PDK140	1.4k	1.6k	105C	25k§	8.3m	200J	Si△	C245a
184	HD2100-14	1.4k	1.7k	150J	22k	8.3m	150J	Si	M637c
185	JD2300-14	1.4k	1.7k	150J	35k	8.3m	150J	Si	M946
186	R9G0141800	1.4k	1.8k	95C	21k	8.3m	175J	Si	C246e
187	A730PD	1.4k	1.8k	100C	25k		175J	Si	M1148
188	DN961-14	1.4k	1.9k	175J	27k	10m	175J	Si	C2460
189	DS2004SN14	1.4k	2.0k	55C	25k§	10m	180S	Si△	M954
190	2001PDK140	1.4k	2.0k	105C	30 §	8.3m	200J	Si△	C245a
191	R9G0142200	1.4k	2.2k	105C	30k	8.3m	175J	Si	C246e
192	AR2004P14	1.4k	2250	55H	25k§	10m	175J	Si△	M1006§%
193	AR2004S14	1.4k	2250	55H	25k§	10m	175J	Si△	M1006♦%
194	JD3000-14	1.4k	2.4k	150J	45k	8.3m	150J	Si	M946
195	2601PDN140	1.4k	2.6k	107C	40k§	8.3m	200J	Si△	C1002⊠
196	DS2002SN14	1.4k	2.8k	55H	33k	10m	175J	Si△	M954
197	3001PDN140	1.4k	3.0k	108C	50k§	8.3m	200J	Si△	C1001a⊠
198	JD4000-14	1.4k	3.0k	150J	50k	8.3m	150J	Si	M946
199	4001PDR140	1.4k	4.0k	105C	84k		175J	Si	C246o
200	SSiN4283	1.5k	1.03m	120C	9.4k	10m	180J	Si△	C247
201	2L15	1.5k	.02	25	10	8.3m	175	Si	A1hy
202	1N590	1.5k	25m	25A			165B	Si	S281a
203	1N591	1.5k	25m	25A			165B	Si	S281
204	DD15	1.5k	30m	25A	4.0	8.3	100A	Si	A109b
205	5L15	1.5k	.05	25	10	8.3m	175	Si	A1hy
206	VA15	1.5k	50m	40A	3.0	83m	150A	Si△	A1m
207	1N1731A	1.5k	50m	175$	9.0	80m	200A	Si	A1gd
208	1N1133	1.5k	.075	75	3.5	5.0m	170	Si	F57d
209	M15F	1.5k	80m	55A	8.0		150A	Si	A1abd
210	M15S	1.5k	80m	55A	8.0		150A	Si	A1abd
211	M15UF	1.5k	80m	55A	8.0		150A	Si	A1abd
212	HV15PD	1.5k	80m	100A			150A	Si	A94q
213	1N2630	1.5k	85m	70$	5.0		100A	Si	M84
214	1N2635	1.5k	85m	70$	5.0		100A	Si	M84d
215	1N2636	1.5k	85m	70$	5.0		100A	Si	M84e
216	1N3283	1.5k	.10	25A	2.5		150A	Si△	DO7
217	10L15	1.5k	.10	25	20	8.3m	175	Si	A1hy
218	10R15B	1.5k	.10	25	60		175	Si	
219	PS2418	1.5k	.10	25A				Si	C15
220	1N588	1.5k	.10	50A	5.0		175A	Si	DO1

SYMBOLS AND CODES EXPLAINED IN INTERPRETER

11. RECTIFIERS, HIGH VOLTAGE - PIV ≥ 1 kV (Cont'd)

IN ORDER OF: (1) PIV (2) IO MAX (3) @ TEMP & (4) TYPE NUMBER

LINE No.	4 TYPE NUMBER	1 PIV (V)	MAX AVG FWD DC CURRENT 2 Io MAX (A)	3 @ TEMP (°C)	MAX RATING SURGE CURR PEAK 1 Cy (A)	PULSE WIDTH (s)	MAX. TEMP (°C)	MAT	DRAWING NO.
1	1N1134	1.5k	.10	75	3.5	5.0m	170	Si	F57e
2	1N2375	1.5k	.10	100A	12	8.3m	150A	Si	A1fu
3	1N1410	1.5k	.125	75A	6.0		150	Si	A149
4	dc5Z3	1.5k	130m	35A	50		125A	Si	M1194
5	1N2504	1.5k	.15	25A			150A	Si	A6
6	15L15	1.5k	.15	25	20	8.3m	175	Si	A1hy
7	1N1731	1.5k	.20	25A	2.5	8.0m	150A	Si	A1gd
8	20L15	1.5k	.20	25	20	8.3m	175	Si	A1hy
9	PS1141	1.5k	.20	25A	2.5 §	8.0m	175A	Si	A1gd
10	B427-15	1.5k	200m	55	4.0		150	Si△	A50f
11	B587-15	1.5k	200m	55	4.0			Si△	A69r
12	MC5600	1.5k	200m	100	10			Si	A60w
13	1N2886	1.5k	250m	25A			150S	Si	M122a
14	1N2887	1.5k	250m	25A			150S	Si	A83w
15	25L15	1.5k	.25	25	20	8.3m	175	Si	A1hy
16	M15K	1.5k	.25	25A	2.0	1	150A	Si△	A83k
17	1N589	1.5k	.25	50A	10		175A	Si	DO1
18	67D015H53PNN	1.5k	250m	50A	35		150A	Si	A1yu
19	67D015H55FNN	1.5k	250m	50A	35		150A	Si	F12aj
20	HS15	1.5k	250m	50	14	8.3m	175	Si	A298ad
21	HVE15	1.5k	250m	50	14	8.3m	175A	Si	A298s
22	SC15	1.5k	.25	55A	10	8.3m	175	Si	A1ds
23	7D15	1.5k	250m	65A	3.0	8.3m	150A	Si	DO7
24	1N1130	1.5k	.30	25A			150A	Si	S24
25	1N1131	1.5k	.30	25A			150A	Si	S24d
26	1N2508	1.5k	.30	25A			150A	Si	A6
27	30L15	1.5k	.30	25	40	8.3m	175	Si	A1hy
28	DFB03R	1.5k	300m	25A	10		125J	Si△	A1abe
29	GFA03R	1.5k	.30	40	25		125J	Si△	A249f
30	GU-1F	1.5k	300m	40	25	10m	110	Si△	A333
31	dc5U4	1.5k	350m	35A	50		125A	Si	M1195a
32	1N1745	1.5k	.38	75C	6.0		150	Si	F12s
33	1N2358	1.5k	400m	25$	15		150	Si	DO1
34	40L15	1.5k	.40	25	40	8.3m	175	Si	A1hy
35	V30N	1.5k	400m	100L	30	10m	150J	Si	A313d
36	1N1746	1.5k	.44	75C	6.0		150	Si	F12r
37	R1500	1.5k	0.5		30	8.0m	175A	Si	DO41
38	1N3187	1.5k	.50	25A	4.0	1	150A	Si	M82b
39	50L15	1.5k	.50	25	40	8.3m	175	Si	A1hy
40	PS1441	1.5k	.50	25A	10	8.0m	175A	Si	F13a
41	1N3234	1.5k	500m	50A	12		175S	Si	A1cs
42	DFC05R	1.5k	.50	50	20		125J	Si△	A298r
43	EF150	1.5k	500m	50A	35	8.0m	150A	Si	A3aa
44	HV15	1.5k	500m	50A	40	8.3m	125A	Si*	A1ty
45	RA-1F	1.5k	500m	50A	25	10m	130J	Si	A334
46	SLD1.5S	1.5k	500m	50A	30	8.0m	150A	Si	F12s
47	SLD1.5TS	1.5k	500m	50A	30	8.0m	150A	Si	F57d
48	SLD1.5V	1.5k	500m	50A	30	8.0m	150A	Si	Alfu
49	500S15	1.5k	500m	55	35	8.3m	150A	Si	A1tp
50	1N3870	1.5k	.50	60A	5.0 §		200A	Si	A1ds
51	1N5330	1.5k	.54	40A	15 §		150A	Si	A1fv
52	60L15	1.5k	.60	25	40	8.3m	175	Si	A1hy
53	SLD1.5U	1.5k	600m	25A	30	8.0m	150A	Si	Algd
54	1N2866	1.5k	700m		7.0	8.3m	200A	Si	A86b
55	1N4374	1.5k	.75		15			Si	DO1
56	1N2780	1.5k	.75	25A	15		165S	Si	A145
57	75R15B	1.5k	.75	25	60		175	Si	
58	1N2619	1.5k	.75	50A			175A	Si△	A31a
59	1N3245	1.5k	750m	50A	15		175S	Si	A1cs
60	HV815	1.5k	750m	50	50	8.0m	175S	Si	M212h
61	1N570	1.5k	.75	150$				Si	M9a
62	80L15	1.5k	.80	25	60	8.3m	175	Si	A1hy
63	US15	1.5k	800m	25A	20	8.3m	150	Si	A1fv
64	1S2309	1.5k	800m	65A	60		150J	Si	A56a
65	425SH3AB1	1.5k	850m	50A	50		150A	Si	A69ak
66	1N3930	1.5k	1.0					Si	M126e
67	1N2364	1.5k	1.0	25	15		150	Si	DO4
68	1N2365	1.5k	1.0	25	15		150	Si	S117
69	100L15	1.5k	1.0	25	60	8.3m	175	Si	A1hy
70	100R15B	1.5k	1.0	25	60		175	Si	
71	GFE10	1.5k	1.0	25	30		125J	Si△	A249f
72	GH-1F	1.5k	1.0	25	35	10m	150	Si△	A333
73	423NB2Al1	1.5k	1.0	40A	50		150A	Si	M1017†
74	423NC2Al1	1.5k	1.0	40A	50		150A	Si	M1017†
75	HVC15	1.5k	1.0	50A	80	8.3m	125A	Si*	A1ey
76	SX15#B	1.5k	1.0	50	60	8.3m	150	Si	A344b
77	SXS15	1.5k	1.0	50	60	8.3m	150	Si	A344b
78	B588-15	1.5k	1.0	55	25			Si△	A69s
79	BA223-15	1.5k	1.0	55	25			Si△	A1rx
80	GP10W	1.5k	1.0	55A	25		175	Si	DO41
81	Z15UF	1.5k	1.0	55A	60		150A	Si	A1abc
82	TD-15	1.5k	1.0	60A	60	10m	140J	Si	A268b
83	BA5P5	1.5k	1.0	75	30		175	Si	A1rx
84	1N4865	1.5k	1.25	40A	150 §		125A	Si	M326
85	3RUS2150	1.5k	1.25	50	100		150	Si	A3az
86	67C015H20LSS	1.5k	1.25	50A	90		140A	Si	M101g
87	PS2348	1.5k	1.3	25A			175A	Si	M22
88	TD-15H	1.5k	1.3	60	60	10m	140S	Si	M1092
89	BY350-1500	1.5k	1.5		50	10m	140J	Si	A313l
90	SI15	1.5k	1.5		60			Si	A1ty
91	150R15B	1.5k	1.5	25	60		175	Si	
92	GH-3F	1.5k	1.5	50	60	10m	150	Si△	A333b
93	Z15F	1.5k	1.5	55A	60		150A	Si	A1abc
94	Z15S	1.5k	2.0		60		150A	Si	A1abc
95	200R15B	1.5k	2.0	25	60		175	Si	
96♦	BY448	1.5k	2.0	25C	30	10m	140J	△	A333C
97	523NB2Al1	1.5k	2.0	40A	125		150A	Si	M1017†
98	523NC2Al1	1.5k	2.0	40A	125		150A	Si	M1017†
99	423NF2AH1	1.5k	2.0	50A	50		150A	Si	M1233
100	250R15B	1.5k	2.5	25	250		175	Si	
101	S3A15	1.5k	3.0		200			Si	A1ey
102	300R15B	1.5k	3.0	25	250		175	Si	
103	KX15	1.5k	3.0	50	200	8.3m	150	Si	A344a
104	KXS15	1.5k	3.0	50	200	8.3m	150	Si	A344a
105	1N3371	1.5k	3.0	55C	30	8.3m	200C	Si	S505
106	1N3775	1.5k	3.3	50B	15 §		175A	Si△	DO4
107	350R15B	1.5k	3.5	25	250		175	Si	
108	400R15B	1.5k	4.0	25	250		175	Si	
109	450R15B	1.5k	4.5	25	250		175	Si	
110	BY359-1500	1.5k	4.5	102A	60		125J	Si	TO220A
111	S5A15	1.5k	5.0		200			Si	A1ey
112	1N2364A	1.5k	5.0	25	20		150	Si	DO4
113	1N2365A	1.5k	5.0	25	20		150	Si	S117
114	500R15B	1.5k	5.0	25	250		175	Si	
115	M5P5	1.5k	5.0	55A	300		175A	Si	A1ep
116	SDA168I	1.5k	5.0	55C	150		125	†	M1159
117	1N3920	1.5k	5.0	100C	100	8.3m	200C	Si	DO4
118	550R15B	1.5k	5.5	25	250		175	Si	
119	600R15B	1.5k	6.0	25	250		175	Si	
120	M7P5	1.5k	6.0	50	400	8.3m	175	Si	A1ep
121	1N2364B	1.5k	10	25C	25		150	Si	DO4
122	1N2365B	1.5k	10	25C	25		150	Si	S117
123	1N3925	1.5k	10	100C	100	8.3m	200C	Si	DO4
124	SSiD04100	1.5k	10	110C	125	10m	160J	Si△	S4p△
125	SSiD04100A	1.5k	10	110C	125	10m	160J	Si△	S4p△
126	SW15PCN012	1.5k	17	100C	210 §	10m	150J	Si	DO4⊠
127	F3S3	1.5k	30	124C	300		190C	Si	DO5
128	SW15PCN030	1.5k	30	125C	350 §	10m	175J	Si	DO4⊠
129	SSiE4583	1.5k	35		375	10m	175J	Si	S559
130	SSiE4683	1.5k	35		375	10m	175J	Si	S559
131	SSiE4383	1.5k	35	120C	300	10m	175J	Si	M1218
132	SSiE4483	1.5k	35	120C	300	10m	175J	Si	M1218
133	F4S3	1.5k	37	123C	600		190C	Si	DO5
134	F5S3	1.5k	45	122C	700		190C	Si	DO5
135	SW15PCN040	1.5k	70	100C	650 §	10m	175J	Si	DO5⊠
136	F6S3	1.5k	70	138C	1.2k		190C	Si	DO5
137	SW15PCN055	1.5k	75	110C	900 §	10m	175	Si	DO5⊠
138	SW15PCN075	1.5k	75	135C	1.3k§	10m	175	Si	DO5⊠
139	DFS80A15	1.5k	80	93C	1.6k	10m	150J	Si	M567⊠
140	F7S3	1.5k	85	132C	1.5k		190C	Si	DO5
141	SSiF3883	1.5k	89	119	1.0k	10m	180J	Si△	S72m△
142	SSiF3883A	1.5k	89	119	1.0k	10m	180J	Si△	S52c△
143	SSiF3983	1.5k	89	119	1.0k	10m	180J	Si△	S72m△
144	SSiF3983A	1.5k	89	119	1.0k	10m	180J	Si△	S52c△
145	SSF15	1.5k	100	55	5.0		175	Si	A83de
146	101KLR150S10	1.5k	100	70	3.0k		125J	Si△	DO8
147	DSS100A15	1.5k	100	90C	2.0k	10m	150J	Si	S567⊠
148	A177PE	1.5k	100	100C	2.5k	8.3m	175J	Si△	S120j
149	101KL150S10	1.5k	100	110C	3.0k		125J	Si△	DO8
150	101KL150S15	1.5k	100	110C	3.0k		175J	Si△	DO8
151	101KL150S20	1.5k	100	110C	3.0k		175J	Si△	DO8
152	101KL150S25	1.5k	100	110C	3.0k		175J	Si△	DO8
153	101KLR150S15	1.5k	100	120	3.0k		175J	Si△	DO8
154	101KLR150S20	1.5k	100	120	3.0k		175J	Si△	DO8
155	101KLR150S25	1.5k	100	120	3.0k		175J	Si△	DO8
156	101KLR150S30	1.5k	100	120	3.0k		175J	Si△	DO8
157	A170PE	1.5k	100	130C	2.5k	8.3m	200J	Si△	S120j⊠
158	SSiG3883	1.5k	109	118	1.1k	10m	180	Si△	S72m△
159	SSiG3883A	1.5k	109	118	1.1k	10m	180	Si△	S52c△
160	SSiG3983	1.5k	109	118	1.1k	10m	180	Si△	S72m△
161	SSiG3983A	1.5k	109	118	1.1k	10m	180	Si△	S52c△
162	A187PE	1.5k	150	50C	2.8k	8.3m	125J	Si△	S120j⊠
163	150TD13	1.5k	150	114C	4.5k	10m	150J	Si	S529
164	G6S3	1.5k	150	125C	2.1k	8.3m	190C	Si	DO8
165	A180PE	1.5k	150	143C	3.4k	8.3m	200J	Si△	S120j⊠
166	SV15-15FK	1.5k	150	150J	3.0k	10m	150J	Si#	S569
167	SV15-15FM	1.5k	150	150J	3.0k	10m	150J	Si#	S569
168	SV15-15FRK	1.5k	150	150J	3.0k	10m	150J	Si#	S569
169	SV15-15FRM	1.5k	150	150J	3.0k	10m	150J	Si#	S569
170	H6S3	1.5k	160	126C	2.5k	8.3m	190C	Si	DO9
171	SSiK3883	1.5k	160	126	4.0k	10m	180J	Si△	S72m△
172	SSiK3883A	1.5k	160	126	4.0k	10m	180J	Si△	S72m△
173	SSiK3983	1.5k	160	126	4.0k	10m	180J	Si△	S72m△
174	SSiK3983A	1.5k	160	126	4.0k	10m	180J	Si△	S72m△
175	J11X	1.5k%	200	55	2.0k	10m	125J	Si	C248b
176	S20N1600JA	1.5k	210	100C	4.5k§	10m	150J	Si△	M378
177	S20P1600JA	1.5k	220	100C	4.0k§	10m	175J	Si△	M378
178	DFS250A15	1.5k	250	54C	5.0k	10m	125J	Si	M568⊠
179	A197PE	1.5k	250	110C	5.0k	8.3m	175J	Si△	S435a⊠
180	1S2258	1.5k	250	111C	5.0k§	8.3m	150J	Si△	C240
181	J5S3	1.5k	250	122C	4.5k	8.3m	190C	Si	DO9
182	A190PE	1.5k	250	144C	6.5k	8.3m	200J	Si△	S435a⊠
183	SSiK2883	1.5k	296	136C	2.7k	10m	180J	Si*	M851
184	DSS300A15	1.5k	300	79C	6.0k	10m	150J	Si	S568⊠
185	S30N1600JA4	1.5k	320	100C	4.5k§	10m	175J	Si△	M378
186	300TD13	1.5k	350	82C	6.5k	10m	150J	Si	S531
187	SW15HHN300	1.5k	380	100C	55k§	10m	180J	Si	M1155⊠
188	SW15PHN300	1.5k	380	100C	5.5k§	10m	180J	Si	M1155⊠
189	SSiL3883	1.5k	386	109	7.2k	10m	180	Si△	S345
190	SSiL3883A	1.5k	386	109	7.2k	10m	180	Si△	S52c△
191	SSiL3983	1.5k	386	109	7.2k		180J	Si△	SW345
192	A397PE	1.5k	400	110	5.0k	8.3m	175	Si△	M771
193	NLA397PE	1.5k	400	110C	5.0k	8.3m	125J	Si	C242a
194	SW15HHN400	1.5k	400	120C	7.5k§	10m	190J	Si	M1155⊠
195	SW15PHN400	1.5k	400	120C	7.5k§	10m	190J	Si	M1155⊠
196	A390PE	1.5k	400	145	7.0k	8.3m	200J	Si△	M771
197	NLA390PE	1.5k	400	145C	7.0k		200J	Si	C242a
198	DF452-15	1.5k	400	150J	5.0k	10m	150J	Si#	M771
199	SSiN3083	1.5k	580	121C	9.4k	10m	180J	Si△	S12a
200	SSiN3183	1.5k	580	121	9.4k		180J	Si△	S12a
201	A402DD	1.5k	600	60C	9.5k		150J	Si	C246b
202	1S2252	1.5k	600	93C	10k§	8.3m	150J	Si△	C240c
203	S904SXU15	1.5k	600	100C	9.0k§	10m	175J	Si	M759⊠
204	SSiL2883	1.5k	665	115C	7.2k	10m	180J	Si△	M851
205	S954SXU15	1.5k	680	100C	9.0k§	10m	175J	Si	M759⊠
206	A437PE	1.5k	750	65	10k	8.3m	175C	Si△	C246b
207	A596PE	1.5k	750	65C	10k		175J	Si	C246b
208	SW15KBR805	1.5k	800	100H	17k	10m	175J	Si	S435j
209	S1104SXU15	1.5k	850	100C	16k§	10m	175J	Si	M759⊠
210	A620DD	1.5k	900	65	9.5k		150J	Si	C246b
211	DS804SE15	1.5k	1.0k	55H	9.0k		175J	Si	C248
212	A430PE	1.5k	1.0k	113C	10k	8.3m	200J	Si△	C246b
213	NLA430PE	1.5k	1.0k	113C	10k	8.3m	200J	Si	C246b
214	DS904SM15	1.5k	1.11k	55C	9.0k§	10m	200S	Si△	C245b
215	AR904P15	1.5k	1150	55H	9.0k§	10m	175J	Si△	M1005§%
216	AR904S15	1.5k	1150	55H	9.0k§	10m	175J	Si△	M1005♦%
217	A330PE	1.5k	1.2k	112C	11k		200J	Si△	M1147
218	A641PE	1.5k	1.5k	65C	17k		175J	Si	C246b
219	A440PE	1.5k	1.5k	115C	21k		200J	Si△	C245e
220	AR1104P15	1.5k	1550	55H	175 §	10m	175J	Si△	M1005§%

SYMBOLS AND CODES EXPLAINED IN INTERPRETER

11. RECTIFIERS, HIGH VOLTAGE - PIV ≥ 1 kV (Cont'd)

IN ORDER OF: (1) PIV (2) IO MAX (3) @ TEMP & (4) TYPE NUMBER

LINE No.	4 TYPE NUMBER	1 PIV (V)	MAX AVG FWD DC CURRENT 2 Io MAX (A)	3 @ TEMP (°C)	MAX RATING SURGE CURR PEAK 1 Cy (A)	PULSE WIDTH (s)	MAX. TEMP (°C)	MAT	DRAWING NO.
1	AR1104S15	1.5k	1550	55H	175k§	10m	175J	Si△	M1005♦%
2	DS1104SM15	1.5k	1.55k	55C	16k§	10m	200S	Si△	M757
3	A730PE	1.5k	1.8k	100C	25k		175J	Si	M1148
4	DS2004SN15	1.5k	2.0k	55C	25k§	10m	180S	Si△	M954
5	SSiP6083	1.5k	2.06k	92	17k	10m	180	Si△	C246j
6	AR2004P15	1.5k	2250	55H	25k§	10m	175J	Si△	M1006§%
7	AR2004S15	1.5k	2250	55H	25k§	10m	175J	Si△	M1006♦%
8	SSiR6083	1.5k	2.5k		47k	10m	160J	Si	S561b
9	DS2002SN15	1.5k	2.8k	55H	33k	10m	175J	Si△	M954
10	JD4000-15	1.5k	3.0k	150J	50k	8.3m	150J	Si	M946
11	HV16A	1.6k	.05	50A	17 §	10m	175A	Si	A3t
12	MV16A	1.6k	.05	50A	16 §	10m	175A	Si	A3h
13	10R16B	1.6k	.10	25	60		175	Si	
14	DRX10	1.6k	200m		15	10m	125J	Si	A283f
15	HV16B	1.6k	.25	50A	17 §	10m	175A	Si	A3t
16	MV16B	1.6k	.25	50A	16 §	10m	175A	Si	A3h
17	1N2359	1.6k	400m	25$	15		150	Si	DO1
18	1N1110	1.6k	.40	100	24	4.0m	150	Si	F22c
19	CP115	1.6k	.40	100				Si	M84aj
20	SLDHV1	1.6k	.50	25A	22		175A	Si	M239a
21	HV16C	1.6k	.50	50A	17 §	10m	175A	Si	A3t
22	MV16C	1.6k	.50	50A	16 §	10m	175A	Si	A3h
23	SLD1.6S	1.6k	500m	50A	30	8.0m	150A	Si	F22c
24	1N2490	1.6k	500m	100A	15	8.3m	100A	Si	M84bz
25	CP110	1.6k	.50	100				Si	M84ah
26	S5347	1.6k	.50	100A			100A	Si	M84w
27	1N2631	1.6k	600m	70$	5.0		100A	Si	M84a
28	1N2633	1.6k	600m	70$	5.0		100A	Si	M84b
29	1N2634	1.6k	600m	70$	5.0		100A	Si	M84c
30	1N2389	1.6k	.60	100A			100A	Si	M84q
31	1N2781	1.6k	.75	25A	15		165S	Si	A145
32	75R16B	1.6k	.75	25	60		175	Si	
33	1N3726	1.6k	.75	50A	12		175A	Si	A1bp
34	1N4497	1.6k	.75	85A	35 §		125A	Si	M239
35	1N1150	1.6k	750m	100$			125	Si	M84k
36	1N1150A	1.6k	.75	100A			100A	Si	M84k*
37	1N1237	1.6k	.75	100A			100A	Si	M84b
38	1N1238	1.6k	.75	100A			100A	Si	M84a
39	BY269	1.6k	800m	25A	20	10m	175S	Si§	A249a
40	1N2366	1.6k	1.0	25	15		150	Si	DO4
41	1N2367	1.6k	1.0	25	15		150	Si	S117
42	100R16B	1.6k	1.0	25	60		175	Si	
43	SPCHV1	1.6k	1.0	25A	23	8.3m	175A	Si	M950*
44	SPFHV16	1.6k*	1.0	25A			150A	Si	M950ak
45	SN113	1.6k	1.0	45A	30	10m	175J	Si	DO15
46	GP10Y	1.6k	1.0	55A	25		175	Si	DO41
47	P513	1.6k	1.0	75A	50	10m	150J	Si	A1bg
48	U30M	1.6k%	1.0	80L	50	10m	150J	Si	A94m
49	U31M	1.6k%	1.0	90L	30	10m	140J	Si	A94m
50	U32M	1.6k%	1.0	100L	50	10m	150J	Si	A94m
51	SLD1	1.6k	1.1	30A	50		125A	Si△	M239a
52	DS0.9-16A	1.6k	1.2	45A	70 §	10m	150J	Si	M841
53	DSA0.9-16A	1.6k	1.2	45A	70 §	10m	150J	Si	M841
54	SSiB9890A	1.6k	1.2	45A		10m	150J	Si△	M571a
55	SKE1/16	1.6k	1.3	45A	50	10m	160J	Si	M746a
56	DSA1.2-16A	1.6k	1.4	45A	75 §	10m	150J	Si	A9p
57	SKS1/16	1.6k	1.4	45A	100	10m	160J	Si	M746a
58	1N2659	1.6k	1.5	25A	15	8.3m	165A	Si	M126b
59	150R16B	1.6k	1.5	25	60		175	Si	
60	TPFHV16	1.6k*	1.5	25A				Si	M950ak
61	TPHHV16	1.6k*	1.5	25A				Si	M950ak
62	DSA2-16A	1.6k	1.5	45A	120 §	10m	150J	Si	A9q
63	DS1.2-16A	1.6k	1.7	45A	75 §	10m	180J	Si	A9p
64	SSiC9990A	1.6k	1.7	45A		10m	150J	Si△	M571
65	DS2-16A	1.6k	1.8	45A	120 §	10m	180J	Si	A9q
66	2ASLD1	1.6k	2.0	25A	200		175A	Si	M239a
67	2ASPC1	1.6k	2.0	25A	200	8.3m	100	Si	M950*
68	200R16B	1.6k	2.0	25	60		175	Si	
69	SPC1	1.6k	2.2	25A	50	8.3m	175A	Si	M950*
70	SPF16	1.6k*	2.2	25A			150A	Si	M950ak
71	250R16B	1.6k	2.5	25	250		175	Si	
72	SKE2.5/16	1.6k	2.5	45A	150	10m	150J	Si	M571c
73	SKN2.5/16	1.6k	2.5	45A	150	10m	180J	Si	S452
74	1N2722	1.6k	3.0	25A	15	8.3m	165A	Si	M126f
75	300R16B	1.6k	3.0	25	250		175	Si	
76	SPSHV16	1.6k*	3.0	25A				Si	M950ak
77	SODSLD1	1.6k	3.0	30A	290		140A	Si△	M239t
78	TPF16	1.6k*	3.3	25A				Si	M950ak
79	TPH16	1.6k*	3.3	25A				Si	M950ak
80	350R16B	1.6k	3.5	25	250		175	Si	
81	1N2691	1.6k	3.6	25A	15	8.3m	165A	Si	M126h
82	2ASPF16	1.6k*	4.0	25A			150A	Si	M950ak
83	400R16B	1.6k	4.0	25	250		175	Si	
84	450R16B	1.6k	4.5	25	250		175	Si	
85	SSiD9990A	1.6k	4.7	45A		10m	150J	Si△	S344
86	1N2366A	1.6k	5.0	25	20		150	Si	DO4
87	1N2367A	1.6k	5.0	25	20		150	Si	S117
88	500R16B	1.6k	5.0	25	250		175	Si	
89	SKN5/16	1.6k	5.0	45A	160	10m	180J	Si	S352b
90	550R16B	1.6k	5.5	25	250		175	Si	
91	2ATPF16	1.6k*	6.0	25A				Si	M950ak
92	2ATPH16	1.6k*	6.0	25A				Si	M950ak
93	600R16B	1.6k	6.0	25	250		175	Si	
94	SODSPC1	1.6k	6.0	25A	300	8.3m	175A	Si	M950k*
95	SODSPF16	1.6k*	6.0	25A				Si	M950ak
96♦	D6/1600A	1.6k	6.0	100C	120 §	10m	150J	Si	A231
97	SPS16	1.6k*	6.6	25A				Si	M950ak
98	SODTPF16	1.6k*	9.0	25				Si	M950ak
99	SODTPH16	1.6k*	9.0	25A				Si	M950ak
100	DA6-1600	1.6k	9.0	95C	120	10m	150J	Si	A31u
101	1N2366B	1.6k	10	25C	25		150	Si	DO4
102	1N2367B	1.6k	10	25C	25		150	Si	S117
103▼	D10N1600B	1.6k	10	100C	170 §	10m	150J	Si	S493c
104▼	D10N1600C	1.6k	10	100C	170 §	10m	150J	Si	S493b
105	DS6-16F	1.6k	10	130C	180	10m	180J	Si	
106	DSA9-16F	1.6k	11	120C	250	10m	150J	Si	
107	DS9-16F	1.6k	11	150C	250	10m	180J	Si	
108	2ASPS16	1.6k*	12	25A				Si	M950ak
109	SKKD15-16	1.6k	15	82C	320		125J	Si	M1055
110	SKKE15-16	1.6k	15	82C	320		125J	Si	M1055
111	SW16PCN012	1.6k	17	100C	210 §	10m	150J	Si	DO4Ø
112	SODSPS16	1.6k*	18	25A				Si	M950ak
113	BYX13-1600	1.6k	20	100	600	10m	150J	Si	S72ccØ
114	SKR26/16	1.6k	20	125C	350	8.3m	180A	Si	DO4
115▼	D24N1600B	1.6k	24	100C	510 §	10m	150J	Si	S493e
116▼	D24N1600C	1.6k	24	100C	510 §	10m	150J	Si	S493d
117▼	D24N1600U	1.6k	24	100C	510 §	10m	150J	Si	S493d
118▼	D24NR1600B	1.6k	24	100C	510 §	10m	150J	Si	S493e
119▼	D24NR1600C	1.6k	24	100C	510 §	10m	150J	Si	S493d
120▼	D24NR1600U	1.6k	24	100C	510 §	10m	150J	Si	S493d
121	DS17-16A	1.6k	25	45A	300 §	10m	190J	Si	S4vØ
122	DSA17-16A	1.6k	25	100C	300 §	10m	190J	Si	S4vØ
123	SKN20/16	1.6k	25	100C	320	10m	180J	Si	S171sØ
124	SKR20/16	1.6k	25	100C	350	8.3m	180A	Si	DO4
125	SKN26/16	1.6k	25	125C	320	10m	180J	Si	DO4
126	SA16PCN031(A)	1.6k	25	130C	250 §	10m	180J	Si△	DO4Ø
127	VBO13-16N01	1.6k	30	30C	220	10m	150J	Si	
128	SW16PCN020	1.6k	30	115C	245		175J	Si	DO4Ø
129	BYX96-1600	1.6k	30	125B	400 §	10m	175J	Si	S455Ø
130	SW16PCN030	1.6k	30	125C	350 §	10m	175J	Si	DO4Ø
131	MDD25-16N1	1.6k	32	80C	450	10m		Si	
132	DSA22-16A	1.6k	33	45A	450 §	10m	150J	Si	S408c
133▼	D34N1600B	1.6k	34	100C	550 §	10m	150J	Si	S493e
134▼	D34N1600C	1.6k	34	100C	550 §	10m	150J	Si	S493d
135▼	D34N1600U	1.6k	34	100C	550 §	10m	150J	Si	S493d
136▼	D34NR1600B	1.6k	34	100C	550 §	10m	150J	Si	S493e
137▼	D34NR1600C	1.6k	34	100C	550 §	10m	150J	Si	S493d
138▼	D34NR1600U	1.6k	34	100C	550 §	10m	150J	Si	S493d
139	D24/1600B	1.6k	38	83C	510	10m	150J	Si	S493a
140	D24/1600C	1.6k	38	83C	510	10m	150J	Si	S493
141	VBO20-16N01	1.6k	40	55C	300	10m	150J	Si	
142	10MA160	1.6k	40	104C	800	10m	130J	Si	S527a
143	BYX97-1600	1.6k	40	125A	800 §	10m	150J	Si	S29bØ
144▼	SD040N16P	1.6k	40	146C	600	10m	180J	Si	DO5
145▼	SD040R16P	1.6k	40	146C	600	10m	180J	Si	DO5
146▼	SD041N16P	1.6k	40	146C	600	10m	180J	Si	S567a
147	DS22-16A	1.6k	42	45A	450 §	10m	180J	Si	S408c
148	DSA35-16A	1.6k	42	45A	650 §	10m	150J	Si	S19uØ
149	SA16PCN051(A)	1.6k	42	100C	600 §	10m	150J	Si△	DO5Ø
150	SKKD46-16	1.6k	45	86C	700		125J	Si	Y240
151	SKN45/16	1.6k	50	100C	700	10m	180J	Si	S171yØ
152	SKN46/16	1.6k	50	100C	600	10m	180J	Si	DO5
153	SKR45/16	1.6k	50	100C	600	10m	180J	Si	DO5
154	SKR46/16	1.6k	50	100C	600	10m	180J	Si	DO5
155	DS35-16A	1.6k	52	45A	650 §	10m	180J	Si	S19uØ
156	D34/1600B	1.6k	54	88C	550	10m	150J	Si	S493a
157	D34/1600C	1.6k	54	88C	550	10m	150J	Si	S493
158	DSA42-16A	1.6k	60	45A	1.1k§	10m	150J	Si	S408d
159▼	D60N1600B	1.6k	60	100C	1.3k§	10m	150J	Si	S567a
160▼	D60N1600C	1.6k	60	100C	1.3k§	10m	150J	Si	S571
161▼	D60N1600U	1.6k	60	100C	1.3k§	10m	150J	Si	S571
162▼	D60NR1600B	1.6k	60	100C	1.3k§	10m	150J	Si	S567a
163▼	D60NR1600C	1.6k	60	100C	1.3k§	10m	150J	Si	S571
164▼	D60NR1600U	1.6k	60	100C	1.3k§	10m	150J	Si	S571
165	SA16PCN061	1.6k	60	100C	1.0k§	10m	150J	Si△	DO5Ø
166	20MA160	1.6k	60	108C	950	10m	150J	Si	S527a
167	DSA75-16B	1.6k	60	115C	1.2k§	10m	150J	Si	S465cØ
168	MDD42-16N1	1.6k	64	94C	1.1k	10m	150J	Si	
169	DS42-16A	1.6k	65	45A	1.1k§	10m	180J	Si	S408d
170	D60/1600B	1.6k	65	94C	.80k	10m	150J	Si	S171g%
171	SKB60/16	1.6k	67	85C	1.0k	10m	125J	Si	C254
172	70HF160	1.6k	70		1.1k§	8.3m	180J	Si△	DO5Ø
173	SW16PCN040	1.6k	70	100C	650 §	10m	175J	Si	DO5Ø
174	70HFR160	1.6k	70	110C	1.2k		140C	Si	DO5
175	DS75-16B	1.6k	70	115C	1.1k§	10m	180J	Si	S465eØ
176▼	SD070N16P	1.6k	70	140C	1.1k	10m	180J	Si	DO5
177▼	SD070R16P	1.6k	70	140C	1.1k	10m	180J	Si	DO5
178♦	SD071N16P	1.6k	70	140C	1.1k	10m	180J	Si	S481
179♦	SD071R16P	1.6k	70	140C	1.1k	10m	180J	Si	S481
180	SW16PCN055	1.6k	75	110C	900 §	10m	175	Si	DO5Ø
181	SW16PCN075	1.6k	75	135C	1.3k§	10m	175	Si	DO5Ø
182	DD65N1600	1.6k	76	88C	1.6k	10m	150J	Si	20
183	DSA80-16A	1.6k	80	45A	2.1k§	10m	150J	Si	S408eØ
184	SKKD81-16	1.6k	80	87C	2.0k		125J	Si	Y240
185	SKKE81-16	1.6k	80	87C	2.0k		125J	Si	Y240
186	85HF160	1.6k	85	110C	1.4k	6.0m	180J	Si	DO5
187	85HFR160	1.6k	85	110C	1.8k		140C	Si	DO5
188	DD85N1600	1.6k	89	96C	1.9k	10m	150J	Si	20
189▼	SD090N16P	1.6k	90	135C	1.5k	10m	180J	Si	DO5
190▼	SD090R16P	1.6k	90	135C	1.5k	10m	180J	Si	DO5
191▼	SD091N16P	1.6k	90	135C	1.5k	10m	180J	Si	S481
192▼	SD091R16P	1.6k	90	135C	1.5k	10m	180J	Si	S481
193	SKD60/16	1.6k	92	85C	1.0k	10m	125J	Si	C255
194	SKN70/16	1.6k	95	100C	1.0k	10m	180J	Si	S481
195	SKN71/16	1.6k	95	100C	1.0k	10m	180J	Si	DO5
196	SKR70/16	1.6k	95	100C	1.0k	10m	180J	Si	DO5
197	SKR71/16	1.6k	95	100C	1.0k	10m	180J	Si	DO5
198	101KLR160S10	1.6k	100	70	3.0k		125J	Si△	DO8
199	L08M	1.6k%	100	90C	2.0k	10m	150J	Si	S518
200▼	D75N1600B	1.6k	100	100C	1.6k§	10m	150J	Si	S567a
201▼	D75N1600C	1.6k	100	100C	1.6k§	10m	150J	Si	S571
202▼	D75N1600U	1.6k	100	100C	1.6k§	10m	150J	Si	S571
203▼	D75NR1600B	1.6k	100	100C	1.6k§	10m	150J	Si	S567a
204▼	D75NR1600C	1.6k	100	100C	1.6k§	10m	150J	Si	S571
205▼	D75NR1600U	1.6k	100	100C	1.6k§	10m	150J	Si	S571
206	L07M	1.6k%	100	104	2.0k	10m	125J	Si	S518
207	101KL160S10	1.6k	100	110C	3.0k		125J	Si△	DO8
208	101KL160S15	1.6k	100	110C	3.0k		175J	Si△	DO8
209	101KL160S20	1.6k	100	110C	3.0k		175J	Si△	DO8
210	101KL160S25	1.6k	100	110C	3.0k		175J	Si△	DO8
211	SR100AM32	1.6k	100	110C	3.0k	8.3m	150J	Si	S435b
212	101KLR160S15	1.6k	100	120	3.0k		175J	Si△	DO8
213	101KLR160S20	1.6k	100	120	3.0k		175J	Si△	DO8
214	101KLR160S25	1.6k	100	120	3.0k		175J	Si△	DO8
215	101KLR160S30	1.6k	100	120	3.0k		175J	Si△	DO8
216	SKR100/16	1.6k	100	125C	1.5k	10m	180A	Si	S171m
217	SV10-16RK	1.6k	100	175J	2.2k	10m	175J	Si#	S569
218	SV10-16RM	1.6k	100	175J	2.2k	10m	175J	Si#	S569
219	DS80-16A	1.6k	110	45A	2.1k§	10m	180J	Si	S408eØ
220	DSA110-16A	1.6k	110	100C	2.8k§	10m	150A	Si	S408eØ

SYMBOLS AND CODES EXPLAINED IN INTERPRETER

11. RECTIFIERS, HIGH VOLTAGE - PIV ≥ 1 kV (Cont'd)

IN ORDER OF: (1) PIV (2) IO MAX (3) @ TEMP & (4) TYPE NUMBER

LINE No.	4 TYPE NUMBER	1 PIV (V)	MAX AVG FWD DC CURRENT 2 Io MAX (A)	3 @ TEMP (°C)	MAX RATING SURGE CURR PEAK 1 Cy (A)	PULSE WIDTH (s)	MAX. TEMP (°C)	MAT	DRAWING NO.
1	SKD100/16	1.6k	116	85C	1.1k	10m	125J	Si	C255
2	SKN100/16	1.6k	125	100C	1.5k	10m	180J	Si	DO8
3	45MA160	1.6k	150	76C	1.7k	10m	150J	Si	S435g
4	BYX32-1600	1.6k	150	100A	1.6k	10m	190J	Si△	S203b⊠
5▼	SD150N16M	1.6k	150	125C	3.6k	10m	180J	Si	S569
6▼	SD150N16P	1.6k	150	125C	3.6k	10m	180J	Si	S569
7▼	SD150R16M	1.6k	150	125C	3.6k	10m	180J	Si	S569
8▼	SD150R16P	1.6k	150	125C	3.6k	10m	180J	Si	S569
9	SW16PHN151	1.6k	150	125C	3.2k	10m	180J	Si	S435j
10	DS110-16A	1.6k	160	75C	3.2k§	10m	180J	Si	S408e⊠
11	1N3276	1.6k	160	125C	2.0k		190J	Si	DO9
12	SKN130/16	1.6k	165	100C	2.0k	10m	180J	Si	DO8
13	SKR130/16	1.6k	165	100C	2.0k	10m	180J	Si	DO30
14	DS175-16L	1.6k	182	100C	2.8k§	10m	150J	Si	S506d⊠
15	IRKD200-16	1.6k	200	25J	9.0k		125J	Si	M1274 *
16	IRKD240-16	1.6k	200	25J	10k		125J	Si	M1274c*
17	IRKE200-16	1.6k	200	25J	9.0k		125J	Si	M1274a
18	IRKE240-16	1.6k	200	25J	10k		125J	Si	M1274b
19▼	SD200N16M	1.6k	200	110C	4.7k	10m	180J	Si	S569
20▼	SD200N16P	1.6k	200	110C	4.7k	10m	180J	Si	S569
21▼	SD200R16M	1.6k	200	110C	4.7k	10m	180J	Si	S569
22▼	SD200R16P	1.6k	200	110C	4.7k	10m	180J	Si	S569
23	SV2016	1.6k	200	110C	4.0k	10m	175J	Si	DO8
24	SW16PHN201	1.6k	200	110C	4.2k	10m	180J	Si	S435j
25	S20N1700JA	1.6k	210	100C	4.5k§	10m	150J	Si△	M378
26	S20P1700JA	1.6k	220	100C	4.0k§	10m	175J	Si△	M378
27	SR200DM32R	1.6k	240	75C	5.0k	8.3m	150J	Si△	S435c
28	SR200DM-32S	1.6k	240	75C	5.0k§	8.3m	150J	Si△	S435
29	1N3177	1.6k	240	100C	3.0k		150J	Si	DO9
30	FD250DM32	1.6k	240	105C	5.0k§	8.3m	150J	Si△	C248a
31	253PJA160	1.6k	250	73C	2.7k	10m	150J	Si	M1246
32	70MA160	1.6k	250	74C	4.0k	10m	150J	Si	S12r
33	1S2259	1.6k	250	111C	5.0k§	8.3m	150J	Si△	C240
34	BYX33-1600	1.6k	250	125B	4.0k	10m	190J	Si△	M294⊠
35	DS290-16J	1.6k	290	100C	4.7k§		150J	Si	S506
36	D250/1600E	1.6k	300	85C	5.3k	10m	150J	Si	M486
37	TV3016	1.6k	300	110C	6.0k	10m	175J	Si	DO9
38	301U160	1.6k	300	120C	6.2k	8.3m	200J	Si	DO9⊠
39	303U160	1.6k	300	120C	5.9k	6.0m	200J	Si	S551
40	309U160	1.6k	300	120C	5.9k	6.0m	200J	Si	S467
41	R620163000	1.6k	300	138C	5.5k	8.3m	175J	Si	C242
42	S30N1700JA4	1.6k	320	100C	4.5k§	10m	175J	Si△	M378
43	SKN240/16	1.6k	320	100C	5.0k	10m	180J	Si	DO9
44	SKR240/16	1.6k	320	100C	5.0k	10m	180J	Si	DO9
45	SW16HHN320	1.6k	320	100C	4.0k§	10m	180J	Si	M1155a⊠
46	SW16PHN320	1.6k	320	100C	4.0k§	10m	180J	Si	M1155a⊠
47	SKR320/16	1.6k	320	125C	8.0k	10m	180A	Si	S171p
48	DN262-16	1.6k	360	175J	4.0k	10m	175J	Si#	M771
49	SW16HHN380	1.6k	370	100C	5.5k§	10m	180J	Si	M1155a⊠
50	SW16PHN380	1.6k	370	100C	5.5k§	10m	180J	Si	M1155a⊠
51▼	SD300R16M	1.6k	380	100C	6.0k	10m	180J	Si	S506c
52▼	SD300R16P	1.6k	380	100C	6.0k	10m	180J	Si	S506c
53	403PJA160	1.6k	400	76C	4.0k	10m	150J	Si	M1246a
54	SR400FH-32	1.6k	400	98C	10k§	8.3m	150J	Si△	S502a
55	R620164000	1.6k	400	112C	6.0k	8.3m	175J	Si	C242
56▼	SD400N16M	1.6k	400	120C	8.2k	10m	190J	Si	S506c
57▼	SD400N16P	1.6k	400	120C	8.2k	10m	190J	Si	S506c
58▼	SD400R16M	1.6k	400	120C	8.2k	10m	190J	Si	S506c
59▼	SD400R16P	1.6k	400	120C	8.2k	10m	190J	Si	S506c
60	SKN320/16	1.6k	420	100C	8.0k	10m	180J	Si	S510
61	DS430-16J	1.6k	430	100C	8.4k		150J	Si	S506b
62	FD600-16	1.6k	430	150J	5.5k	8.3m	190J	Si	M637a
63	A432PM	1.6k	450	90C	7.4k		150J	Si△	C245e
64	471PDA160	1.6k	470	105C	6.2k§	8.3m	200J	Si△	E200a
65	501V160	1.6k	500	105C	8.0k§	8.3m	200J	Si△	S120g⊠
66	501VF160	1.6k	500	105C	8.0k	8.3m	200J	Si	S525
67	503V160	1.6k	500	105C	8.0k		200J	Si	S563
68	501VR160	1.6k	500	120C	8.0k§	8.3m	200J	Si△	S120g⊠
69	701F16S	1.6k	500	130	9.0k		175J	Si△	S12b
70	DN462-16	1.6k	540	175J	6.0k	10m	175J	Si#	M771
71	A402DE	1.6k	600	60C	9.5k		150J	Si	C246b
72	FD500E32	1.6k	600	90C	10k§	8.3m	150J	Si△	C240d
73	FD500DH32	1.6k	600	100C	11k§	8.3m	150J	Si△	M1344
74	S904SXU16	1.6k	600	100C	9.0k§	10m	175J	Si	M759⊠
75	R720160600	1.6k	600	110C	7.0k	8.3m	175J	Si	C246f
76	DF652-16	1.6k	600	150J	9.0k	10m	150J	Si#	M1337
77	GD800-16	1.6k	640	150J	8.0k	8.3m	150J	Si	M637
78▼	SD300C16C	1.6k	650	55	6.0k	10m	180J	Si	DO200AA
79	S954SXU16	1.6k	680	100C	9.0k§	10m	175J	Si	M759⊠
80	703PJA160	1.6k	700	83C	9.0k	10m	150J	Si	M1246b
81	SKN500/16	1.6k	700	100C	7.0k	10m	180J	Si	C242b
82	250MA160	1.6k	700	101C	9.0k	10m	175J	Si	S12s
83	A500PM	1.6k	740	100C	10k	8.3m	175	Si△	M463
84	A433PM	1.6k	750	85C	10k		175J	Si△	C245e
85	SKID800/16	1.6k	800	40C	1.3k	10m	125J	Si	M1286
86▼	SD400C16C	1.6k	800	55	8.2k	10m	190J	Si	DO200AA
87	801F16H	1.6k	800	85	12k	20m	150J	Si	C241a
88	SW16KBN805	1.6k	800	100H	15k§	10m	175J	Si	M747⊠
89	SW16KBR805	1.6k	800	100H	17k	10m	175J	Si	S435j
90	1S2262	1.6k	800	101C	14k§	8.3m	150J	Si△	C239b
91	FD1000A32	1.6k	800	101C	14k§	8.3m	150J	Si△	C239a
92	801PDB160	1.6k	800	105C	8.0k§	8.3m	200J	Si	E200b
93	800UD26	1.6k	800	150J	12k	10m	150J	Si	C249
94	DF752-16	1.6k	800	150J	1.2k	10m	150J	Si#	M1337
95	DN662-16	1.6k	800	175J	12k	10m	175J	Si#	M1337
96	FD900-16	1.6k	800	190J	6.0k	8.3m	190J	Si	M637a
97	851PDE160L30	1.6k	850	75C	9.5k		150J	Si	M1277
98	851PDE160L20	1.6k	850	78C	9.5k		150J	Si	M1277
99	851PDE160L25	1.6k	850	78C	9.5k		150J	Si	M1277
100	S1104SXU16	1.6k	850	100C	16k§	10m	175J	Si	M759⊠
101	SKN870/16	1.6k	870	100C	105	10m	150J	Si	C246c
102	R720160900	1.6k	900	85C	8.5k	8.3m	175J	Si	C246f
103	A540PM	1.6k	1.0k		10k		200J	Si△	M463
104	A696PM	1.6k	1.0k		14k		150J	Si	C245
105	DS804SE16	1.6k	1.0k	55H	9.0k		175J	Si	C248
106	NLA540PM	1.6k	1.0k	100C	12k	8.3m	200J	Si	C246b
107	1001PDE160	1.6k	1.0k	107C			200J	Si△	M1277
108	1101PDK160	1.6k	1.1k	125C	22k	10m	200J	Si	C246d
109	DN762-16	1.6k	1.1k	175J	15k	10m	175J	Si#	M1337
110	DS904SM16	1.6k	1.11k	55C	9.0k§	10m	200S	Si△	C245b
111	AR904P16	1.6k	1150	55H	9.0k§	10m	175J	Si△	M1005§%
112	AR904S16	1.6k	1150	55H	9.0k§	10m	175J	Si△	M1005♦%
113	GD1400-16	1.6k	1.15k	190J	8.0k	8.3m	190J	Si	M637
114	HD1500-16	1.6k	1.2k	150J	18k	8.3m	150J	Si	M637c
115	R9G0161300	1.6k	1.3k	125C	16k	8.3m	190J	Si	C246e
116	A641PM	1.6k	1.5k	65C	17k		175J	Si	C246b
117	AR1104P16	1.6k	1550	55H	175 §	10m	175J	Si△	M1005§%
118	AR1104S16	1.6k	1550	55H	175k§	10m	175J	Si△	M1005♦%
119	DS1104SM16	1.6k	1.55k	55C	16k§	10m	200S	Si△	M757
120	FD1600A32	1.6k	1.6k	91C	35k§	8.3m	150J	Si△	C244a
121	1601PDK160	1.6k	1.6k	105C	25k§	8.3m	200J	Si△	C245a
122	HD2500-16	1.6k	1600	190J	20k		190J	Si	M637c
123	HD2100-16	1.6k	1.7k	150J	22k	8.3m	150J	Si	M637c
124	JD2300-16	1.6k	1.7k	150J	35k	8.3m	150J	Si	M946
125	R9G0161800	1.6k	1.8k	95C	21k	8.3m	175J	Si	C246e
126	A730PM	1.6k	1.8k	100C	25k		175J	Si	M1148
127	DN961-16	1.6k	1.9k	175J	27k	10m	175J	Si	C2460
128	DS2004SN16	1.6k	2.0k	55C	25k§	10m	180S	Si△	M954
129	2001PDK160	1.6k	2.0k	105C	30 §	8.3m	200J	Si△	C245a
130	AR3007P16	1.6k	2.2k	55H	27k§	10m	150J	Si△	M1006§%
131	AR3007S16	1.6k	2.2k	55H	27k§	10m	150J	Si△	M1006♦%
132	SW16CXC990	1.6k	2.2k	55H	28k	10m	160J	Si	DO200A
133	R9G0162200	1.6k	2.2k	105C	30k	8.3m	175J	Si	C246e
134	AR2004P16	1.6k	2250	55H	25k§	10m	175J	Si△	M1006§%
135	AR2004S16	1.6k	2250	55H	25k§	10m	175J	Si△	M1006♦%
136	SW16CXC950	1.6k	2.4k	25H	25k	10m	160J	Si△	C246d
137	JD3000-16	1.6k	2.4k	150J	45k	8.3m	150J	Si	M946
138	2601PDN160	1.6k	2.6k	107C	40k§	8.3m	200J	Si△	C1002⊠
139	JD4000-16	1.6k	3.0k	150J	50k	8.3m	150J	Si	M946
140	4001PDR160	1.6k	4.0k	105C	84k		175J	Si	C246o
141	SSiT6090	1.6k	4.2k		85k	10m	160J	Si	S561c
142	1N2888	1.7k	250m	25A			150S	Si	M122b
143	1N2889	1.7k	250m	25A			150S	Si	A83ak
144	DFB03T	1.7k	300m	25A	10		125J	Si△	A1abe
145	SKEA1/17	1.7k	1.2	45A	50	10m	150J	Si	M746a
146	SKSA1/17	1.7k	1.3	45A	150	10m	150J	Si	M746a
147	SKNA2/17	1.7k	2.0	45A	150	10m	150J	Si	S452
148	SKEA2.5/17	1.7k	2.5	45A	160	10m	150J	Si	M571c
149	SKNA4/17	1.7k	3.7	45A	160	10m	150J	Si	S352b
150	SKNA20/17	1.7k	19	100C	320	10m	150J	Si	S171s
151	SSiE20100	1.7k	20	85C	250	10m	160J	Si△	S4p△
152	SSiE20100A	1.7k	20	85C	250	10m	160J	Si△	S4p△
153	S20N1800JA	1.7k	210	100C	4.5k§	10m	150J	Si△	M378
154	S20P1800JA	1.7k	220	100C	4.0k§	10m	175J	Si△	M378
155	SSiL20100	1.7k	250	94C	4.8k	10m	160J	Si△	S345
156	DSA304-17A	1.7k	300	100C	4.3k§	10m	150J	Si	C240e
157	S30N1800JA4	1.7k	320	100C	4.5k§	10m	175J	Si△	M378
158	DSA400-17NC	1.7k	400	98C	9.8k	10m	150J	Si	
159	DSA400-17KC	1.7k	450	90C	9.8k	10m	150J	Si	
160	DSA603-17GC	1.7k	450	119C	14k	10m	150J	Si	M1215
161	DSA603-17L1C	1.7k	450	119C	14k	10m	150J	Si	M1215
162	A402DM	1.7k	600	60C	9.5k		150J	Si	C246b
163	S904SXU17	1.7k	600	100C	9.0k§	10m	175J	Si	M759⊠
164	S954SXU17	1.7k	680	100C	9.0k§	10m	175J	Si	M759⊠
165	A500PS	1.7k	740	100C	10k	8.3m	175	Si△	M463
166	A433PS	1.7k	750	85C	10k		175J	Si△	C245e
167	S1104SXU17	1.7k	850	100C	16k§	10m	175J	Si	M759⊠
168	A540PS	1.7k	1.0k		10k		200J	Si△	M463
169	A696PS	1.7k	1.0k		14k		150J	Si	C245
170	DS804SE17	1.7k	1.0k	55H	9.0k		175J	Si	C248
171	NLA540PS	1.7k	1.0k	100C	12k	8.3m	200J	Si	C246b
172	DS904SM17	1.7k	1.11k	55C	9.0k§	10m	200S	Si△	C245b
173	AR904P17	1.7k	1150	55H	9.0k§	10m	175J	Si△	M1005§%
174	AR904S17	1.7k	1150	55H	9.0k§	10m	175J	Si△	M1005♦%
175	SKN1500/16	1.7k	1.27k	100C	16k	10m	175C	Si	C246h
176	DSA705-17AC	1.7k	1.3k	26C	14k	10m	150J	Si	M953
177	A641PS	1.7k	1.5k	65C	17k		175J	Si	C246b
178	DSA1508-17AC	1.7k	1520	100	29k	8.3m	150	Si	M246l
179	AR1104P17	1.7k	1550	55H	175 §	10m	175J	Si△	M1005§%
180	AR1104S17	1.7k	1550	55H	175k§	10m	175J	Si△	M1005♦%
181	DS1104SM17	1.7k	1.55k	55C	16k§	10m	200S	Si△	M757
182	SKN2000/16	1.7k	1.65k	100C	25k	10m	175C	Si	C246l
183	A730PS	1.7k	1.8k	100C	25k		175J	Si	M1148
184	DS2004SN17	1.7k	2.0k	55C	25k§	10m	180S	Si△	M954
185	AR3007P17	1.7k	2.2k	55H	27k§	10m	150J	Si△	M1006§%
186	AR3007S17	1.7k	2.2k	55H	27k§	10m	150J	Si△	M1006♦%
187	AR2004P17	1.7k	2250	55H	25k§	10m	175J	Si△	M1006§%
188	AR2004S17	1.7k	2250	55H	25k§	10m	175J	Si△	M1006♦%
189	A740PD	1.7k	2.4k		32k	8.3m	185J	Si	M1148
190	JD4000-17	1.7k	3.0k	150J	50k	8.3m	150J	Si	M946
191	SSiN42100	1.8k			9.4k		180J	Si	C247
192	1N1135	1.8k	.065	75	3.5	5.0m	170	Si	F57d
193	1N1136	1.8k	.085	75	3.5	5.0m	170	Si	F57e
194	10R18B	1.8k	100m	25	60		175	Si	
195	1N1411	1.8k	.125	25A			150	Si	A149
196	67D018H55FNN	1.8k	250m	50A	35		150A	Si	F12aj
197	HVC180	1.8k	.25	55A	7.5		150	Si	M291
198	1N1747	1.8k	.36	75C	6.0		150	Si	F12s
199	1N2360	1.8k	400m	25$	15		150	Si	DO1
200	CP119	1.8k	.40	75				Si	M84a
201	1N1748	1.8k	.42	75C	6.0		150	Si	F12r
202	R1800	1.8k	0.5		30	8.0m	175A	Si	DO41
203	673-75	1.8k	0.5	25A	15	8.3m	150	Si	M1166♦
204	1N3235	1.8k	500m	50A	12		175S	Si	A1cs
205	SLD1.8T	1.8k	500m	50A	30	8.0m	150A	Si	F57e
206	SLD1.8TS	1.8k	500m	50A	30	8.0m	150A	Si	F57e
207	US18	1.8k	700m	25A	20	8.3m	150	Si	A1fv
208	75R18B	1.8k	750m	25	60		175	Si	
209	1N3727	1.8k	.75	50A	12		175A	Si	A1bp
210	1N2368	1.8k	1.0	25	15		150	Si	DO4
211	1N2369	1.8k	1.0	25	15		150	Si	S117
212	100R18B	1.8k	1.0	25	60		175	Si	
213	U30N	1.8k%	1.0	80L	50	10m	150J	Si	A94m
214	U31N	1.8k%	1.0	90L	30	10m	140J	Si	A94m
215	U32N	1.8k%	1.0	100L	50	10m	150J	Si	A94m
216	3RUS2180	1.8k	1.25	50	100		150	Si	A3az
217	150R18B	1.8k	1.5	25	60		175	Si	
218	200R18B	1.8k	2.0	25	60		175	Si	
219	250R18B	1.8k	2.5	25	250		175	Si	
220	300R18B	1.8k	3.0	25	250		175	Si	

SYMBOLS AND CODES EXPLAINED IN INTERPRETER

11. RECTIFIERS, HIGH VOLTAGE - PIV ≥ 1 kV (Cont'd)

IN ORDER OF: (1) PIV (2) IO MAX (3) @ TEMP & (4) TYPE NUMBER

LINE No.	4 TYPE NUMBER	1 PIV (V)	MAX AVG FWD DC CURRENT 2 Io MAX (A)	3 @ TEMP (°C)	MAX RATING SURGE CURR PEAK 1 Cy (A)	PULSE WIDTH (s)	MAX. TEMP (°C)	MAT	DRAWING NO.
1	1N4537	1.8k*	3.0	100C	15 §	8.3m	175C	Si	DO4
2	350R18B	1.8k	3.5	25	250		175	Si	
3	400R18B	1.8k	4.0	25	250		175	Si	
4	450R18B	1.8k	4.5	25	250		175	Si	
5	1N2368A	1.8k	5.0	25	20		150	Si	DO4
6	1N2369A	1.8k	5.0	25	20		150	Si	S117
7	500R18B	1.8k	5.0	25	250		175	Si	
8	550R18B	1.8k	5.5	25	250		175	Si	
9	600R18B	1.8k	6.0	25	250		175	Si	
10	1N2368B	1.8k	10	25B	25		150	Si	DO4
11	1N2369B	1.8k	10	25C	25		150	Si	S117
12	D24/1800B	1.8k	38	83C	510	10m	150J	Si	S493a
13	D24/1800C	1.8k	38	83C	510	10m	150J	Si	S493
14	D34/1800B	1.8k	54	88C	550	10m	150J	Si	S493a
15	D34/1800C	1.8k	54	88C	550	10m	150J	Si	S493
16▼	D121NR1800B	1.8k	98	130C	2.7k§	10m	180J	Si	S532a
17▼	D121NR1800V	1.8k	98	130C	2.7k§	10m	180J	Si	S532a
18	L08N	1.8k%	100	90C	2.0k	10m	150J	Si	S518
19	100MAB180	1.8k	100	100C	2.0k	10m	150J	Si	S435e
20	L07N	1.8k%	100	104	2.0k	10m	125J	Si	S518
21	SR100AM36	1.8k	100	110C	3.0k	8.3m	150J	Si	S435b
22	SV10-18RK	1.8k	100	175J	2.2k	10m	175J	Si#	S569
23	SV10-18RM	1.8k	100	175J	2.2k	10m	175J	Si#	S569
24▼	D121N1800B	1.8k	120	100C	3.0k§	10m	180J	Si	S532a
25▼	D121N1800V	1.8k	120	100C	3.0k§	10m	180J	Si	S532a
26	153PJA180	1.8k	150	95C	2.0k	10m	150J	Si	M1246
27	200MAB180	1.8k	200	102C	5.0k	10m	150J	Si	S435f
28	SV2018	1.8k	200	110C	4.0k	10m	175J	Si	DO8
29	DS170-18L	1.8k	210	80C	2.5k§	10m	150J	Si	S506j
30	S20N1900JA	1.8k	210	100C	4.5k§	10m	150J	SiΔ	M378
31	S20P1900JA	1.8k	220	100C	4.0k§	10m	175J	SiΔ	M378
32	SR200DM36R	1.8k	240	75C	5.0k	8.3m	150J	SiΔ	S435c
33	SR200DM-36S	1.8k	240	75C	5.0k§	8.3m	150J	SiΔ	S435
34	FD250DM36	1.8k	240	105C	5.0k§	8.3m	150J	SiΔ	C248a
35	SSiL30100	1.8k	250		4.7k	10m	180J	Si	S345
36▼	D251NR1800B	1.8k	250	100C	5.5k§	10m	180J	Si	S532b
37▼	D251NR1800E	1.8k	250	100C	5.5k§	10m	180J	Si	M1348
38	251UL180S30	1.8k	250	105C	4.1k		175J	Si	DO9
39	1S2260	1.8k	250	111C	5.0k§	8.3m	150J	SiΔ	C240
40▼	D251N1800B	1.8k	250	130C	6k§	10m	180J	Si	S532b
41▼	D251N1800E	1.8k	250	130C	6k§	10m	180J	Si	M1348
42▼	D251N1800V	1.8k	250	130C	6k§	10m	180J	Si	S532b
43	D250/1800E	1.8k	300	85C	5.3k	10m	150J	Si	M486
44	303PJA180	1.8k	300	92C	5.0k	10m	150J	Si	M1246a
45	TV3018	1.8k	300	110C	6.0k	10m	175J	Si	DO9
46	301U180	1.8k	300	120C	6.2k	8.3m	200J	Si	DO9Ø
47	303U180	1.8k	300	120C	5.9k	6.0m	200J	Si	S551
48	309U180	1.8k	300	120C	5.9k	6.0m	200J	Si	S467
49	R620183000	1.8k	300	138C	5.5k	8.3m	175J	Si	C242
50	S30N1900JA4	1.8k	320	100C	4.5k§	10m	175J	SiΔ	M378
51	SW18HHN320	1.8k	320	100C	4.0k§	10m	180J	Si	M1155aØ
52	SW18PHN320	1.8k	320	100C	4.0k§	10m	180J	Si	M1155aØ
53	300WD13	1.8k	350	82C	6.5k	10m	150J	Si	S531
54	DN262-18	1.8k	360	175J	4.0k	10m	175J	Si#	M771
55	SW18HHN380	1.8k	370	100C	5.5k§	10m	180J	Si	M1155aØ
56	SW18PHN380	1.8k	370	100C	5.5k§	10m	180J	Si	M1155aØ
57	400MAB180	1.8k	400	82C	7.5k	10m	150J	Si	S435d
58	SR400FH-36	1.8k	400	98C	10k§	8.3m	150J	SiΔ	S502a
59	SKN400/18	1.8k	400	100C	7.5k	10m	160J	Si	S510
60	R620184000	1.8k	400	112C	6.0k	8.3m	175J	Si	C242
61▼	D428N1800	1.8k	430	100C	7.3k§	10m	150J	Si	M1346
62	FD600-18	1.8k	430	150J	5.5k	8.3m	190J	Si	M637a
63	A432PN	1.8k	450	90C	7.4k		150J	SiΔ	C245e
64▼	D452N1800	1.8k	450	130C	13k§	10m	180J	Si	M1347
65▼	D452NR1800	1.8k	450	130C	13k§	10m	180J	Si	M1347
66	471PDA180	1.8k	470	105C	6.2k§	8.3m	200J	SiΔ	E200a
67	503PJA180	1.8k	500	93C	7.5k	10m	150J	Si	M1246b
68	501V180	1.8k	500	105C	8.0k§	8.3m	200J	SiΔ	S120gØ
69	501VF180	1.8k	500	105C	8.0k	8.3m	200J	Si	S525
70	503V180	1.8k	500	105C	8.0k		200J	Si	S563
71	501VR180	1.8k	500	120C	8.0k§	8.3m	200J	SiΔ	S120gØ
72	701F18S	1.8k	500	130C	9.0k		175J	SiΔ	S12b
73	SSiL24100	1.8k	510	100C	4.8k	10m	160J	Si*	C247a
74	DN462-18	1.8k	540	175J	6.0k	10m	175J	Si#	M771
75	SSiN30100	1.8k	580	121C	9.4k	10m	180J	SiΔ	S12a
76	SSiN31100	1.8k	580	121	9.4k		180J	SiΔ	S12a
77	A402DS	1.8k	600	60C	9.5k		150J	Si	C246b
78	FD500E36	1.8k	600	90C	10k§	8.3m	150J	SiΔ	C240d
79	FD500DH36	1.8k	600	100C	11k§	8.3m	150J	SiΔ	M1344
80	S904SXU18	1.8k	600	100C	9.0k§	10m	175J	Si	M759Ø
81	R720180600	1.8k	600	110C	7.0k	8.3m	175J	Si	C246f
82	DF652-18	1.8k	600	150J	9.0k	10m	150J	Si#	M1337
83	GD800-18	1.8k	640	150J	8.0k	8.3m	150J	Si	M637
84	S954SXU18	1.8k	680	100C	9.0k§	10m	175J	Si	M759Ø
85	250MA180	1.8k	700	101C	9.0k	10m	175J	Si	S12s
86	A500PN	1.8k	740	100C	10k	8.3m	175	SiΔ	M463
87	A433PN	1.8k	750	85C	10k		175J	SiΔ	C245e
88▼	D798N1800	1.8k	800	100C	14k§	10m	150J	Si	M1346a
89	SW18KBN805	1.8k	800	100H	15k§	10m	175J	Si	M747Ø
90	SW18KBR805	1.8k	800	100H	17k	10m	175J	Si	S435j
91	1S2263	1.8k	800	101C	14k§	8.3m	150J	SiΔ	C239b
92	FD1000A36	1.8k	800	101C	14k§	8.3m	150J	SiΔ	C239a
93	801PDB180	1.8k	800	105C	8.0k§	8.3m	200J	Si	E200b
94	DF752-18	1.8k	800	150J	1.2k	10m	150J	Si#	M1337
95	DN662-18	1.8k	800	175J	12k	10m	175J	Si#	M1337
96	FD900-18	1.8k	800	190J	6.0k	8.3m	190J	Si	M637a
97	S1104SXU18	1.8k	850	100C	16k§	10m	175J	Si	M759Ø
98	R720180900	1.8k	900	85C	8.5k	8.3m	175J	Si	C246f
99	A540PN	1.8k	1.0k		10k		200J	SiΔ	M463
100	A696PN	1.8k	1.0k		14k		150J	Si	C245
101	DS804SE18	1.8k	1.0k	55H	9.0k		175J	Si	C248
102	NLA540PN	1.8k	1.0k	100C	12k	8.3m	200J	Si	C246b
103	1001PDE180	1.8k	1.0k	107C			200J	SiΔ	M1277
104	1101PDK180	1.8k	1.1k	125C	22k	10m	200J	Si	C246d
105	DN762-18	1.8k	1.1k	175J	15k	10m	175J	Si#	M1337
106	DS904SM18	1.8k	1.11k	55C	9.0k§	10m	200S	SiΔ	C245b
107	AR904P18	1.8k	1150	55H	9.0k§	10m	175J	SiΔ	M1005§%
108	AR904S18	1.8k	1150	55H	9.0k§	10m	175J	SiΔ	M1005♦%
109	GD1400-18	1.8k	1.15k	190J	8.0k	8.3m	190J	Si	M637
110	HD1500-18	1.8k	1.2k	150J	18k	8.3m	150J	Si	M637c
111	R9G0181300	1.8k	1.3k	125C	16k	8.3m	190J	Si	C246e
112	A641PN	1.8k	1.5k	65C	17k		175J	Si	C246b
113	AR1104P18	1.8k	1550	55H	175 §	10m	175J	SiΔ	M1005§%
114	AR1104S18	1.8k	1550	55H	175k§	10m	175J	SiΔ	M1005♦%
115	DS1104SM18	1.8k	1.55k	55C	16k§	10m	200S	SiΔ	M757
116	FD1600A36	1.8k	1.6k	91C	35k§	8.3m	150J	SiΔ	C244a
117	1601PDK180	1.8k	1.6k	105C	25k§	8.3m	200J	SiΔ	C245a
118	HD2100-18	1.8k	1.7k	150J	22k	8.3m	150J	Si	M637c
119	JD2300-18	1.8k	1.7k	150J	35k	8.3m	150J	Si	M946
120	R9G0181800	1.8k	1.8k	95C	21k	8.3m	175J	Si	C246e
121	A730PN	1.8k	1.8k	100C	25k		175J	Si	M1148
122	DN961-18	1.8k	1.9k	175J	27k	10m	175J	Si	C2460
123	DS2004SN18	1.8k	2.0k	55C	25k§	10m	180S	SiΔ	M954
124	SSiP60100	1.8k	2.06k	92	17k	10m	180	SiΔ	C246j
125	AR3007P18	1.8k	2.2k	55H	27k§	10m	150J	SiΔ	M1006§%
126	AR3007S18	1.8k	2.2k	55H	27k§	10m	150J	SiΔ	M1006♦%
127	SW18CXC990	1.8k	2.2k	55H	28k	10m	160J	Si	DO200A
128	R9G0182200	1.8k	2.2k	105C	30k	8.3m	175J	Si	C246e
129	AR2004P18	1.8k	2250	55H	25k§	10m	175J	SiΔ	M1006§%
130	AR2004S18	1.8k	2250	55H	25k§	10m	175J	SiΔ	M1006♦%
131	A740PE	1.8k	2.4k		32k	8.3m	185J	Si	M1148
132	SW18CXC950	1.8k	2.4k	25H	25k	10m	160J	SiΔ	C246d
133	JD3000-18	1.8k	2.4k	150J	45k	8.3m	150J	Si	M946
134	SSiR60100	1.8k	2.5k		47k	10m	160J	Si	S561b
135	2601PDN180	1.8k	2.6k	107C	40k§	8.3m	200J	SiΔ	C1002Ø
136	JD4000-18	1.8k	3.0k	150J	50k	8.3m	150J	Si	M946
137	FD3500AH-36	1.8k	3.5k	101C	70k§	8.3m	150J	SiΔ	M1019
138	4001PDR180	1.8k	4.0k	105C	84k		175J	Si	C246o
139	SSiT60100	1.8k	4.2k		85k	10m	160J	Si	S561c
140	S20N2000JA	1.9k	210	100C	4.5k§	10m	150J	SiΔ	M378
141	S20P2000JA	1.9k	220	100C	4.0k§	10m	175J	SiΔ	M378
142	S30N2000JA4	1.9k	320	100C	4.5k§	10m	175J	SiΔ	M378
143	A432PT	1.9k	450	90C	7.4k		150J	SiΔ	C245e
144	A402DN	1.9k	600	60C	9.5k		150J	Si	C246b
145	S904SXU19	1.9k	600	100C	9.0k§	10m	175J	Si	M759Ø
146	S954SXU19	1.9k	680	100C	9.0k§	10m	175J	Si	M759Ø
147	A500PT	1.9k	740	100C	10k	8.3m	175	SiΔ	M463
148	A433PT	1.9k	750	85C	10k		175J	SiΔ	C245e
149	S1104SXU19	1.9k	850	100C	16k§	10m	175J	Si	M759Ø
150	A540PT	1.9k	1.0k		10k		200J	SiΔ	M463
151	A696PT	1.9k	1.0k		14k		150J	Si	C245
152	DS804SE19	1.9k	1.0k	55H	9.0k		175J	Si	C248
153	NLA540PT	1.9k	1.0k	100C	12k	8.3m	200J	Si	C246b
154	DS904SM19	1.9k	1.11k	55C	9.0k§	10m	200S	SiΔ	C245b
155	AR904P19	1.9k	1150	55H	9.0k§	10m	175J	SiΔ	M1005§%
156	AR904S19	1.9k	1150	55H	9.0k§	10m	175J	SiΔ	M1005♦%
157	A641PT	1.9k	1.5k	65C	17k		175J	Si	C246b
158	AR1104P19	1.9k	1550	55H	175 §	10m	175J	SiΔ	M1005§%
159	AR1104S19	1.9k	1550	55H	175k§	10m	175J	SiΔ	M1005♦%
160	DS1104SM19	1.9k	1.55k	55C	16k§	10m	200S	SiΔ	M757
161	A730PT	1.9k	1.8k	100C	25k		175J	Si	M1148
162	DS2004SN19	1.9k	2.0k	55C	25k§	10m	180S	SiΔ	M954
163	AR3007P19	1.9k	2.2k	55H	27k§	10m	150J	SiΔ	M1006§%
164	AR3007S19	1.9k	2.2k	55H	27k§	10m	150J	SiΔ	M1006♦%
165	AR2004P19	1.9k	2250	55H	25k§	10m	175J	SiΔ	M1006§%
166	AR2004S19	1.9k	2250	55H	25k§	10m	175J	SiΔ	M1006♦%
167	A740PM	1.9k	2.4k		32k	8.3m	185J	Si	M1148
168	JD4000-19	1.9k	3.0k	150J	50k	8.3m	150J	Si	M946

PIV ≥ 2 kV

LINE No.	TYPE NUMBER	PIV (V)	Io MAX (A)	@ TEMP (°C)	PEAK 1 Cy (A)	PULSE WIDTH (s)	MAX. TEMP (°C)	MAT	DRAWING NO.
172	SSiP67110	2.0k			10k	10m	135J	Si	S561a
173	SSiR67110	2.0k			25k	10m	135J	Si	S561b
174	DSA400-20NC	2.0k		98C	9.8k	10m	150J	Si	
175	CRG20	2.0k	10m		20	1.0m	125	Si	DO7
176	MC156	2.0k	.01	25	1.0	8.0m		Si	A1db
177	10S20	2.0k	10m	55	1.0	8.3m	150A	Si	A1df
178	2L20	2.0k	.02	25	10	8.3m	175	Si	A1hy
179	MC155	2.0k	.02	25	2.0	8.0m		Si	A1db
180	DD20	2.0k	30m	25A	4.0	8.3	100A	Si	A109b
181	MC154	2.0k	.04	25	3.0	8.0m		Si	A1db
182	MHVG20	2.0k	50m		20	1.0m	125	Si	A249e
183	5L20	2.0k	.05	25	10	8.3m	175	Si	A1hy
184	5L209	2.0k	.05	25	10	8.3m	175	Si	A1hy
185	PS2422	2.0k	.05	25A				Si	A1gb
186	VA20	2.0k	50m	40A	3.0	8.3m	150A	SiΔ	A1m
187	HV20A	2.0k	.05	50A	17 §	10m	175A	Si	A3t
188	LK2	2.0k	50m	50A	2.0	8.0m	150A	Si	A3aa
189	MV20A	2.0k	.05	50A	16 §	10m	175A	Si	A3h
190	50S20	2.0k	50m	55	2.0	8.3m	150A	Si	A1df
191	HV20E	2.0k	50m	100A			150A	Si	A1xe
192	HV20K	2.0k	50m	100			175	Si	A1fe
193	HV20M	2.0k	50m	100A			150A	Si	A1xd
194	HV20P	2.0k	50m	100A			150A	Si	A94q
195	1N1732A	2.0k	50m	175$	9.0	8.0m	200A	Si	A1gd
196	M20F	2.0k	80m	55A	8.0		150A	Si	A1abd
197	M20S	2.0k	80m	55A	8.0		150A	Si	A1abd
198	M20UF	2.0k	80m	55A	8.0		150A	Si	A1abd
199	HV20PD	2.0k	80m	100A			150A	Si	A94q
200	1N3284	2.0k	.10	25A	2.5		150A	SiΔ	DO7
201	10L20	2.0k	.10	25	20	8.3m	175	Si	A1hy
202	10R20B	2.0k	100m	25	60		175	Si	
203	PS2419	2.0k	.10	25A				Si	C15
204	VB20	2.0k	100m	40A	3.0	8.3m	150A	SiΔ	A298m
205	VG2	2.0k	100m	40A	3.0	8.3m	150A	SiΔ	A298j
206	1N2376	2.0k	.10	100A	12	8.3m	150A	Si	A1hq
207	1N1412	2.0k	.125	75A	6.0		150	Si	A149
208	15L20	2.0k	.15	25	20	8.3m	175	Si	A1hy
209	ED-0152	2.0k	150m	50A	45	10m	125J	Si	A403
210	ED-1052	2.0k	150m	50A	45	10m	125J	Si	A403
211	1N1732	2.0k	.20	25A	2.5	8.0m	150A	Si	A1gd
212	20L20	2.0k	.20	25	20	8.3m	175	Si	A1hy
213	PS1142	2.0k	.20	25A	2.5 §	8.0m	175A	Si	A1gd
214	RC2	2.0k	200m	50	20	10m	130	SiΔ	A344h
215	B427-20	2.0k	200m	55	4.0		150	SiΔ	A50f
216	B587-20	2.0k	200m	55	4.0			SiΔ	A69r
217	MC5601	2.0k	200m	100	10			Si	A60w
218	1N2890	2.0k	250m	25A			150S	Si	M122a
219	1N2891	2.0k	250m	25A			150S	Si	A83w
220	25L20	2.0k	.25	25	20	8.3m	175	Si	A1hy

SYMBOLS AND CODES EXPLAINED IN INTERPRETER

11. RECTIFIERS, HIGH VOLTAGE - PIV ≥ 2 kV (Cont'd)

IN ORDER OF: (1) PIV (2) IO MAX (3) @ TEMP & (4) TYPE NUMBER

LINE No.	4 TYPE NUMBER	1 PIV (V)	MAX AVG FWD DC CURRENT 2 Io MAX (A)	3 @ TEMP (°C)	MAX RATING SURGE CURR PEAK 1 Cy (A)	PULSE WIDTH (s)	MAX. TEMP (°C)	MAT	DRAWING NO.
1	M20K	2.0k	.25	25A	2.0	1	150A	Si△	A83u
2	1N4513	2.0k	.25	50A	20 §		175A	Si	A52c
3	67D020H53PNN	2.0k	250m	50A	35		150A	Si	A1yu
4	HS20	2.0k	250m	50	14	8.3m	175	Si	A298ad
5	HV20B	2.0k	.25	50A	17 §	10m	175A	Si	A3t
6	HV21	2.0k	250m	50A	20	8.3m	125A	Si*	A1ty
7	HVE20	2.0k	250m	50	14	8.3m	175A	Si	A298s
8	MV20B	2.0k	.25	50A	16 §	10m	175A	Si	A3h
9	SC20	2.0k	.25	55A	10	8.3m	175	Si	A1ds
10	BH200	2.0k	250m	75A	20	8.3m	150A	Si	DO27
11	GI250-2	2.0k	250m	75A	15		175	Si	E204p
12	30L20	2.0k	.30	25	40	8.3m	175	Si	A1hy
13	DFB03W	2.0k	300m	25A	10		125J	Si△	A1abe
14	HVG-2	2.0k	300m	55A	25		150A	Si	A313e
15	PS1850	2.0k	.35	25			200A	Si	A1qd
16	EG200	2.0k	350m	50A	30	8.0m	150A	Si	A3aa
17	350S20	2.0k	350m	55	30	8.3m	150A	Si	A1tp
18	1N1111	2.0k	.38	100	23	4.0m	150	Si	F22d
19	1N2361	2.0k	400m	25$	15		150	Si	DO1
20	40L20	2.0k	.40	25	40	8.3m	175	Si	A1hy
21	SLD2S	2.0k	400m	50A	30	8.0m	150A	Si	F22d
22	SLD2V	2.0k	400m	50A	30	8.0m	150A	Si	A1hq
23	R2000#E	2.0k	0.5		30	8.0m	175A	Si	DO41
24	1N3188	2.0k	.50	25A	4.0	1	150A	Si	M82c
25	50L20	2.0k	.50	25	40	8.3m	175	Si	A1hy
26	PS1442	2.0k	.50	25A	10	8.0m	175A	Si	F13a
27	SLD2U	2.0k	500m	25A	30	8.0m	150A	Si	A1ja
28	SLDHV2	2.0k	.50	25A	22		175A	Si	M239a
29	1N3236	2.0k	500m	50A	12		175S	Si	A1cs
30	EF200	2.0k	500m	50A	35	8.0m	150A	Si	A3aa
31	HV20	2.0k	500m	50A	40	8.3m	125A	Si*	A1ty
32	HV20C	2.0k	.50	50A	17 §	10m	175A	Si	A3t
33	MV20C	2.0k	.50	50A	16 §	10m	175A	Si	A3h
34	500S20	2.0k	500m	55	35	8.3m	150A	Si	A1tp
35	500RS20	2.0k	500m	85	35		150A	Si△	A1tpØ
36	60L20	2.0k	.60	25	40	8.3m	175	Si	A1hy
37	US20	2.0k	600m	25A	20	8.3m	150	Si	A1fv
38	HV820	2.0k	600m	50	50	8.0m	175S	Si	M212h
39	425SH4AB1	2.0k	650m	50A	50		150A	Si	A69am
40	B223-20	2.0k	.70	25	60		175A	Si	A1rx
41	B588-20	2.0k	700m	55	25			Si△	A69s
42	BA223-20	2.0k	700m	55	25			Si△	A1rx
43	75R20B	2.0k	750m	25	60		175	Si	
44	80L20	2.0k	.80	25	60	8.3m	175	Si	A1hy
45	1N2370	2.0k	1.0	25	15		150	Si	DO4
46	1N2371	2.0k	1.0	25	15		150	Si	S117
47	100L20	2.0k	1.0	25	60	8.3m	175	Si	A1hy
48	100R20B	2.0k	1.0	25	60		175	Si	
49	SPCHV2	2.0k	1.0	25A	23	8.3m	175A	Si	M950*
50	SPFHV20	2.0k*	1.0	25A			150A	Si	M950al
51	HVC20	2.0k	1.0	50A	80	8.3m	125A	Si*	A1ey
52	SX20#B	2.0k	1.0	50	60	8.3m	150	Si	A344b
53	SXS20	2.0k	1.0	50	60	8.3m	150	Si	A344b
54	Z20UF	2.0k	1.0	55A	60		150A	Si	A1abc
55	PS2349	2.0k	1.1	25A			175A	Si	M22
56	SLD2	2.0k	1.1	30A	50		125A	Si△	M239a
57	1N2662	2.0k	1.5	25A	15	8.3m	165A	Si	M126c
58	150R20B	2.0k	1.5	25	60		175	Si	
59	TPFHV20	2.0k*	1.5	25A				Si	M950al
60	TPHHV20	2.0k*	1.5	25A				Si	M950al
61	Z20F	2.0k	1.5	55A	60		150A	Si	A1abc
62	SC20F	2.0k	2.0		35			Si	M462
63	Z20S	2.0k	2.0		60		150A	Si	A1abc
64	2ASLD2	2.0k	2.0	25A	200		175A	Si	M239a
65	2ASPC2	2.0k	2.0	25A	200	8.3m	100	Si	M950*
66	200R20B	2.0k	2.0	25	60		175	Si	
67	VC20	2.0k	2.0	40C	50	8.3m	125A	Si△	M430
68	423EF3AH1	2.0k	2.0	50A	50		150A	Si	M1233
69	SPC2	2.0k	2.2	25A	50	8.3m	175A	Si	M950*
70	SPF20	2.0k*	2.2	25A			150A	Si	M950al
71	S20F	2.0k	2.5		10		150	Si	A248m
72	250R20B	2.0k	2.5	25	250		175	Si	
73	1N2723	2.0k	3.0	25A	15	8.3m	165A	Si	M126g
74	300R20B	2.0k	3.0	25	250		175	Si	
75	SPSHV20	2.0k*	3.0	25A				Si	M950al
76	SODSLD2	2.0k	3.0	30A	290		140A	Si△	M239t
77	KX20	2.0k	3.0	50	200	8.3m	150	Si	A344a
78	KXS20	2.0k	3.0	50	200	8.3m	150	Si	A344a
79	TPF20	2.0k*	3.3	25A				Si	M950al
80	TPH20	2.0k*	3.3	25A				Si	M950al
81	350R20B	2.0k	3.5	25	250		175	Si	
82	OSB9110-4	2.0k	3.5	35A	85		175J	Si	
83	OSB9110-30	2.0k	3.5	35A	85		175J	Si	
84	OSM9110-4	2.0k	3.5	35A	85		175J	Si	
85	OSM9110-30	2.0k	3.5	35A	85		175J	Si	
86	2ASPF20	2.0k*	4.0	25A			150A	Si	M950al
87	400R20B	2.0k	4.0	25	250		175	Si	
88	OSB9310-4	2.0k	4.0	30A	180		175J	Si	
89	OSB9310-30	2.0k	4.0	30A	180		175J	Si	
90	OSM9310-4	2.0k	4.0	30A	180		175J	Si	
91	OSM9310-30	2.0k	4.0	30A	180		175J	Si	
92	450R20B	2.0k	4.5	25	250		175	Si	
93	1N2370A	2.0k	5.0	25	20		150	Si	DO4
94	1N2371A	2.0k	5.0	25	20		150	Si	S117
95	500R20B	2.0k	5.0	25	250		175	Si	
96	OSB9210-4	2.0k	5.0	35A	360		175J	Si	
97	OSB9210-30	2.0k	5.0	35A	360		175J	Si	
98	OSM9210-4	2.0k	5.0	35A	360		175J	Si	
99	OSM9210-30	2.0k	5.0	35A	360		175J	Si	
100	SDA168J	2.0k	5.0	55C	150		125	†	M1159
101	1N3921	2.0k	5.0	100C	100	8.3m	200C	Si	DO4
102	550R20B	2.0k	5.5	25	250		175	Si	
103	2ATPF20	2.0k*	6.0	25A				Si	M950al
104	2ATPH20	2.0k*	6.0	25A				Si	M950al
105	600R20B	2.0k	6.0	25	250		175	Si	
106	SODSPC2	2.0k	6.0	25A	300	8.3m	175A	Si	M950m*
107	SODSPF20	2.0k*	6.0	25A				Si	M950al
108	SPS20	2.0k*	6.6	25A				Si	M950al
109	SODTPF20	2.0k*	9.0	25				Si	M950al
110	SODTPH20	2.0k*	9.0	25A				Si	M950al
111	1N2370B	2.0k	10	25B	25		150	Si	DO4
112	1N2371B	2.0k	10	25C	25		150	Si	S117
113	OSB9410-4	2.0k	10	35A	800		175J	Si	
114	OSB9410-30	2.0k	10	35A	800		175J	Si	
115	OSM9410-4	2.0k	10	35A	800		175J	Si	
116	OSM9410-30	2.0k	10	35A	800		175J	Si	
117	1N3926	2.0k	10	100C	100	8.3m	200C	Si	DO4
118	2ASPS20	2.0k*	12	25A				Si	M950al
119	HRSCFS2000	2.0k	15	55	150			Si	A138z
120	SCFS2000	2.0k	15	55A	150		175J	Si	A440
121	SCFS4000	2.0k	15	55A	150		175J	Si	A440a
122	SODSPS20	2.0k*	18	25A				Si	M950al
123	SSiE4360A	2.0k	35	120C	300		175J	Si	M1218
124	SSiE4460A	2.0k	35	120C	300		175J	Si	M1218
125	D1800/2000	2.0k	63	63C	34k	10m	150J	Si	C244b
126	S4KW2C1N	2.0k	80		400		150	Si	M894
127	S4KW2C1	2.0k	80	55A	400		150	Si	M894
128	SSF20	2.0k	100	55	5.0		175	Si	A83de
129	100MAB200	2.0k	100	100C	2.0k	10m	150J	Si	S435e
130	SR100AM40	2.0k	100	110C	3.0k	8.3m	150J	Si	S435b
131	100YD21	2.0k	100	118C	2.0k	10m	150J	Si	C242c
132	SV10-20RK	2.0k	100	175J	2.2k	10m	175J	Si#	S569
133	SV10-20RM	2.0k	100	175J	2.2k	10m	175J	Si#	S569
134	SSM20	2.0k	125	55	7.0		175	Si	A83de
135	153PJA200	2.0k	150	95C	2.0k	10m	150J	Si	M1246
136	150YD13	2.0k	150	114C	4.5k	10m	150J	Si	S529
137	200MAB200	2.0k	200	102C	5.0k	10m	150J	Si	S435f
138	SV2020	2.0k	200	110C	4.0k	10m	175J	Si	DO8
139	200YD21	2.0k	200	118C	4.0k	10m	150J	Si	C242d
140	DS170-20L	2.0k	210	80C	2.5k§	10m	150J	Si	S506j
141	SR200DM40R	2.0k	240	75C	5.0k	8.3m	150J	Si△	S435c
142	SR200DM-40S	2.0k	240	75C	5.0k§	8.3m	150J	Si△	S435
143	FD250DM40	2.0k	240	105C	5.0k§	8.3m	150J	Si△	C248a
144	303PJA200	2.0k	300	92C	5.0k	10m	150J	Si	M1246a
145	DSA304-20A	2.0k	300	100C	4.3k§	10m	150J	Si	C240e
146	TV3020	2.0k	300	110C	6.0k	10m	175J	Si	DO9
147	301U200	2.0k	300	120C	6.2k	8.3m	200J	Si	DO9Ø
148	303U200	2.0k	300	120C	5.9k	6.0m	200J	Si	S551
149	309U200	2.0k	300	120C	5.9k	6.0m	200J	Si	S467
150	R620203000	2.0k	300	138C	5.5k	8.3m	175J	Si	C242
151	SW20HHN320	2.0k	320	100C	4.0k§	10m	180J	Si	M1155aØ
152	SW20PHN320	2.0k	320	100C	4.0k§	10m	180J	Si	M1155aØ
153	300YD13	2.0k	350	82C	6.5k	10m	150J	Si	S531
154	DN262-20	2.0k	360	175J	4.0k	10m	175J	Si#	M771
155	SW20HHN380	2.0k	370	100C	5.5k§	10m	180J	Si	M1155aØ
156	SW20PHN380	2.0k	370	100C	5.5k§	10m	180J	Si	M1155aØ
157	400MAB200	2.0k	400	82C	7.5k	10m	150J	Si	S435d
158	SR400FH-40	2.0k	400	98C	10k§	8.3m	150J	Si△	S502a
159	R620204000	2.0k	400	112C	6.0k	8.3m	175J	Si	C242
160	400YD21	2.0k	400	116C	6.5k	10m	150J	Si	C242e
161▼	D405NR2000	2.0k	400	130C	9.0k§	10m	180J	Si	M1347
162	FD600-20	2.0k	430	150J	5.5k	8.3m	190J	Si	M637a
163	A432L	2.0k	450	90C	7.4k		150J	Si△	C245e
164	DSA400-20KC	2.0k	450	90C	9.8k	10m	105J	Si	M1214
165	DSA603-20GC	2.0k	450	119C	14k	10m	150J	Si	M1215
166	DSA603-20L1C	2.0k	450	119C	14k	10m	150J	Si	M1215
167	471PDA200	2.0k	470	105C	6.2k§	8.3m	200J	Si△	E200a
168	503PJA200	2.0k	500	93C	7.5k	10m	150J	Si	M1246b
169	501V200	2.0k	500	105C	8.0k§	8.3m	200J	Si△	S120gØ
170	501VF200	2.0k	500	105C	8.0k	8.3m	200J	Si	S525
171	503V200	2.0k	500	105C	8.0k		200J	Si	S563
172	501VR200	2.0k	500	120C	8.0k§	8.3m	200J	Si△	S120gØ
173	DN462-20	2.0k	540	175J	6.0k	10m	175J	Si#	M771
174	A402DT	2.0k	600	60C	9.5k		150J	Si	C246b
175	FD500E40	2.0k	600	90C	10k§	8.3m	150J	Si△	C240d
176	1S2253	2.0k	600	93C	10k§	8.3m	150J	Si△	C240c
177	FD500DH40	2.0k	600	100C	11k§	8.3m	150J	Si△	M1344
178	S904SXU20	2.0k	600	100C	9.0k§	10m	175J	Si	M759Ø
179	R720200600	2.0k	600	110C	7.0k	8.3m	175J	Si	C246f
180	DF652-20	2.0k	600	150J	9.0k	10m	150J	Si#	M1337
181	GD800-20	2.0k	640	150J	8.0k	8.3m	150J	Si	M637
182▼	D668N2000	2.0k	670	100C	10k§	10m	150J	Si	M1346a
183	S954SXU20	2.0k	680	100C	9.0k§	10m	175J	Si	M759Ø
184	A500L	2.0k	740	100C	10k	8.3m	175	Si△	M463
185	A433L	2.0k	750	85C	10k		175J	Si△	C245e
186	801F20H	2.0k	800	85	12k	20m	150J	Si	C241a
187	C11CA	2.0k	800	95C	13k	10m	150J	Si	C242f
188	SW20KBN805	2.0k	800	100H	15k§	10m	175J	Si	M747Ø
189	SW20KBR805	2.0k	800	100H	17k	10m	175J	Si	S435j
190	1S2264	2.0k	800	101C	14k§	8.3m	150J	Si△	C239b
191	FD1000A40	2.0k	800	101C	14k§	8.3m	150J	Si△	C239a
192	801PDB200	2.0k	800	105C	8.0k§	8.3m	200J	Si	E200b
193	800YD26	2.0k	800	150J	12k	10m	150J	Si	C249
194	DF752-20	2.0k	800	150J	1.2k	10m	150J	Si#	M1337
195	DN761-20	2.0k	800	150J	12k	10m	150J	Si#	M1337
196	DN662-20	2.0k	800	175J	12k	10m	175J	Si#	M1337
197	FD900-20	2.0k	800	190J	6.0k	8.3m	190J	Si	M637a
198	S1104SXU20	2.0k	850	100C	16k§	10m	175J	Si	M759Ø
199	R720200900	2.0k	900	85C	8.5k	8.3m	175J	Si	C246f
200	A696L	2.0k	1.0k		14k		150J	Si	C245
201	DS804SE20	2.0k	1.0k	55H	9.0k		175J	Si	C248
202	A540L	2.0k	1.0k	100C	12k	8.3m	200	Si△	M463
203	NLA540L	2.0k	1.0k	100C	12k	8.3m	200J	Si	C246b
204	1001PDE200	2.0k	1.0k	107C			200J	Si△	M1277
205	1101PDK200	2.0k	1.1k	100C	18k§	8.3m	175J	Si△	C245a
206	DN762-20	2.0k	1.1k	175J	15k	10m	175J	Si#	M1337
207	DS904SM20	2.0k	1.11k	55C	9.0k§	10m	200S	Si△	C245b
208	AR904P20	2.0k	1150	55H	9.0k§	10m	175J	Si△	M1005§%
209	AR904S20	2.0k	1150	55H	9.0k§	10m	175J	Si△	M1005♦%
210	GD1400-20	2.0k	1.15k	190J	8.0k	8.3m	190J	Si	M637
211	HD1500-20	2.0k	1.2k	150J	18k	8.3m	150J	Si	M637c
212	DSA705-20AC	2.0k	1.3k	26C	14k	10m	150J	Si	M953
213	R9G0201300	2.0k	1.3k	125C	16k	8.3m	190J	Si	C246e
214	A641L	2.0k	1.5k	65C	17k		175J	Si	C246b
215	DSA1508-20AC	2.0k	1520	100	29k	8.3m	150	Si	M246l
216	AR1104P20	2.0k	1550	55H	175k§	10m	175J	Si△	M1005§%
217	AR1104S20	2.0k	1550	55H	175k§	10m	175J	Si△	M1005♦%
218	DS1104SM20	2.0k	1.55k	55C	16k§	10m	200S	Si△	M757
219	A11CA	2.0k	1.6k	81C	26k	10m	150J	Si	M987
220	FD1600A40	2.0k	1.6k	91C	35k§	8.3m	150J	Si△	C244a

SYMBOLS AND CODES EXPLAINED IN INTERPRETER

11. RECTIFIERS, HIGH VOLTAGE - PIV ≥ 2 kV (Cont'd)

IN ORDER OF: (1) PIV (2) IO MAX (3) @ TEMP & (4) TYPE NUMBER

LINE No.	4 TYPE NUMBER	1 PIV (V)	MAX AVG FWD DC CURRENT 2 Io MAX (A)	3 @ TEMP (°C)	MAX RATING SURGE CURR PEAK 1 Cy (A)	PULSE WIDTH (s)	MAX. TEMP (°C)	MAT	DRAWING NO.
1	1601PDK200	2.0k	1.6k	105C	25k§	8.3m	200J	Si△	C245a
2	HD2500-20	2.0k	1600	190J	20k		190J	Si	M637c
3	HD2100-20	2.0k	1.7k	150J	22k	8.3m	150J	Si	M637c
4	JD2300-20	2.0k	1.7k	150J	35k	8.3m	150J	Si	M946
5	R9G0201800	2.0k	1.8k	95C	21k	8.3m	175J	Si	C246e
6	A730L	2.0k	1.8k	100C	25k		175J	Si	M1148
7	DN961-20	2.0k	1.9k	175J	27k	10m	175J	Si	C2460
8	DS2004SN20	2.0k	2.0k	55C	25k§	10m	180S	Si△	M954
9	AR3007P20	2.0k	2.2k	55H	27k§	10m	150J	Si△	M1006§%
10	AR3007S20	2.0k	2.2k	55H	27k§	10m	150J	Si△	M1006♦%
11	SW20CXC990	2.0k	2.2k	55H	28k	10m	160J	Si	DO200A
12▼	D2200N2000	2.0k	2.2k	100C	41k§	10m	160J	Si	M1146a
13▼	D2209N2000	2.0k	2.2k	100C	41k§	10m	160J	Si	M1346d
14	R9G0202200	2.0k	2.2k	105C	30k	8.3m	175J	Si	C246e
15	AR2004P20	2.0k	2250	55H	25k§	10m	175J	Si△	M1006§%
16	AR2004S20	2.0k	2250	55H	25k§	10m	175J	Si△	M1006♦%
17	A740PS	2.0k	2.4k		32k	8.3m	185J	Si	M1148
18	SW20CXC950	2.0k	2.4k	25H	25k	10m	160J	Si△	C246d
19	JD3000-20	2.0k	2.4k	150J	45k	8.3m	150J	Si	M946
20	DSP2500A20	2.0k	2.5k	81C	43k	10m	150J	Si	M1318
21	2601PDN200	2.0k	2.6k	107C	40k§	8.3m	200J	Si△	C1002☑
22	JD4000-20	2.0k	3.0k	150J	50k	8.3m	150J	Si	M946
23	FD3500AH-40	2.0k	3.5k	101C	70k§	8.3m	150J	Si△	M1019
24	DS2106SU20	2.0k	4.0k	55H	36k§	10m	150J	Si△	M1207
25	4001PDR200	2.0k	4.0k	105C	84k		175J	Si	C246o
26	1N2892	2.1k	250m	25A			150S	Si	M122b
27	1N2893	2.1k	250m	25A			150S	Si	A83ak
28	301U210	2.1k	300	120C	6.2k	8.3m	200J	Si	DO9☑
29	303U210	2.1k	300	120C	5.9k	6.0m	200J	Si	S551
30	309U210	2.1k	300	120C	5.9k	6.0m	200J	Si	S467
31	A432LA	2.1k	450	90C	7.4k		150J	Si△	C245e
32	471PDA210	2.1k	470	105C	5.9k	6.0m	200J	Si	E200a
33	501V210	2.1k	500	105C	8.0k§	8.3m	200J	Si△	S120g☑
34	501VF210	2.1k	500	105C	8.0k	8.3m	200J	Si	S525
35	503V210	2.1k	500	105C	8.0k		200J	Si	S563
36	501VR210	2.1k	500	120C	8.0k§	8.3m	200J	Si△	S120g☑
37	A402EP	2.1k	600	60	6.0k		150J	Si	C246b
38	S904SXU21	2.1k	600	100C	9.0k§	10m	175J	Si	M759☑
39	S954SXU21	2.1k	680	100C	9.0k§	10m	175J	Si	M759☑
40	A500LA	2.1k	740	100C	10k	8.3m	175	Si△	M463
41	801PDB210	2.1k	800	105C	8.0k§	8.3m	200J	Si	E200b
42	S1104SXU21	2.1k	850	100C	16k§	10m	175J	Si	M759☑
43	DS804SE21	2.1k	1.0k	55H	9.0k		175J	Si	C248
44	A540LA	2.1k	1.0k	100C	12k	8.3m	200	Si△	M463
45	NLA540LA	2.1k	1.0k	100C	12k	8.3m	200J	Si	C246b
46	1001PDE210	2.1k	1.0k	107C			200J	Si△	M1277
47	DS904SM21	2.1k	1.11k	55C	9.0k§	10m	200S	Si△	C245b
48	AR904P21	2.1k	1150	55H	9.0k§	10m	175J	Si△	M1005§%
49	AR904S21	2.1k	1150	55H	9.0k§	10m	175J	Si△	M1005♦%
50	SKN1500/20	2.1k	1.27k	100C	16k	10m	175C	Si	C246h
51	A641LA	2.1k	1.5k	65C	17k		175J	Si	C246b
52	AR1104P21	2.1k	1550	55H	175k§	10m	175J	Si△	M1005§%
53	AR1104S21	2.1k	1550	55H	175k§	10m	175J	Si△	M1005♦%
54	DS1104SM21	2.1k	1.55k	55C	16k§	10m	200S	Si△	M757
55	1601PDK210	2.1k	1.6k	82C	25k§	8.3m	175J	Si△	C245a
56	SKN2000/20	2.1k	1.65k	100C	25k	10m	175C	Si	C246l
57	A730LA	2.1k	1.8k	100C	25k		175J	Si	M1148
58	DS2004SN21	2.1k	2.0k	55C	25k§	10m	180S	Si△	M954
59	AR3007P21	2.1k	2.2k	55H	27k§	10m	150J	Si△	M1006§%
60	AR3007S21	2.1k	2.2k	55H	27k§	10m	150J	Si△	M1006♦%
61	AR2004P21	2.1k	2250	55H	25k§	10m	175J	Si△	M1006§%
62	AR2004S21	2.1k	2250	55H	25k§	10m	175J	Si△	M1006♦%
63	A740PN	2.1k	2.4k		32k	8.3m	185J	Si	M1148
64	2601PDN210	2.1k	2.6k	82C	40k§	8.3m	175J	Si△	C1002☑
65	DS2106SU21	2.1k	2.62k	55H	50k	10m	150J	Si	M1207
66	JD4000-21	2.1k	3.0k	150J	50k	8.3m	150J	Si	M946
67	SSiP67120	2.2k			10k	10m	135J	Si	S561a
68	SSiR67120	2.2k			25k	10m	135J	Si	S561b
69	SSiN42120	2.2k	1.03m	120C	9.4k	10m	180J	Si△	C247
70	10R22B	2.2k	.10	25	60		175	Si	
71	1N2328	2.2k	.40	25	4.0		150A	Si△	A154
72	75R22B	2.2k	.75	25	60		175	Si	
73	100R22B	2.2k	1.0	25	60		175	Si	
74	150R22B	2.2k	1.5	25	60		175	Si	
75	200R22B	2.2k	2.0	25	60		175	Si	
76	250R22B	2.2k	2.5	25	250		175	Si	
77	300R22B	2.2k	3.0	25	250		175	Si	
78	350R22B	2.2k	3.5	25	250		175	Si	
79	400R22B	2.2k	4.0	25	250		175	Si	
80	450R22B	2.2k	4.5	25	250		175	Si	
81	500R22B	2.2k	5.0	25	250		175	Si	
82	550R22B	2.2k	5.5	25	250		175	Si	
83	600R22B	2.2k	6.0	25	250		175	Si	
84	SV10-22RK	2.2k	100	175J	2.2k	10m	175J	Si#	S569
85	SV10-22RM	2.2k	100	175J	2.2k	10m	175J	Si#	S569
86	SSiK24120	2.2k	190	80C	1.8k	10m	160J	Si*	S72m△☑
87	SSiK25120	2.2k	190	80C	1.8k	10m	160J	Si*	S72m△☑
88	SSiL30120	2.2k	250		4.7k	10m	180J	Si	S345
89	SSiL20120	2.2k	250	94C	4.8k	10m	160J	Si△	S345
90	R620223000	2.2k	300	102C	5.5k	8.3m	150J	Si	C242
91	301U220	2.2k	300	120C	6.2k	8.3m	200J	Si	DO9☑
92	303U220	2.2k	300	120C	5.9k	6.0m	200J	Si	S551
93	309U220	2.2k	300	120C	5.9k	6.0m	200J	Si	S467
94	305U220	2.2k	300	155B	5.2k	10m	200A	Si	S467☑
95	SW22HHN320	2.2k	320	100C	4.0k§	10m	180J	Si	M1155a☑
96	SW22PHN320	2.2k	320	100C	4.0k§	10m	180J	Si	M1155a☑
97	SW22HHN380	2.2k	370	100C	5.5k§	10m	180J	Si	M1155a☑
98	SW22PHN380	2.2k	370	100C	5.5k§	10m	180J	Si	M1155a☑
99▼	D405NR2200	2.2k	400	130C	9.0k§	10m	180J	Si	M1347
100	FD600-22	2.2k	430	150J	5.5k	8.3m	190J	Si	M637a
101	A432LB	2.2k	450	90C	7.4k		150J	Si△	C245e
102	471PDA220	2.2k	470	105C	5.9k	6.0m	200J	Si	E200a
103	501V220	2.2k	500	105C	8.0k§	8.3m	200J	Si△	S120g☑
104	501VF220	2.2k	500	105C	8.0k	8.3m	200J	Si	S525
105	503V220	2.2k	500	105C	8.0k		200J	Si	S563
106	501VR220	2.2k	500	120C	8.0k§	8.3m	200J	Si△	S120g☑
107	SSiL24120	2.2k	510	100C	4.8k	10m	160J	Si*	C247a
108	SSiN30120	2.2k	580	121C	9.4k	10m	180J	Si△	S12a
109	SSiN31120	2.2k	580	121	9.4k		180J	Si△	S12a
110	A402EA	2.2k	600	60	6.0k		150J	Si	C246b
111	R720220600	2.2k	600	87C	7.0k	8.3m	150J	Si	C246f
112	S904SXU22	2.2k	600	100C	9.0k§	10m	175J	Si	M759☑
113	DF652-22	2.2k	600	150J	9.0k	10m	150J	Si#	M1337
114	GD800-22	2.2k	640	150J	8.0k	8.3m	150J	Si	M637
115▼	D668N2200	2.2k	670	100C	10k§	10m	150J	Si	M1346a
116	S954SXU22	2.2k	680	100C	9.0k§	10m	175J	Si	M759☑
117	A500LB	2.2k	740	100C	10k	8.3m	175	Si△	M463
118	A433LB	2.2k	750	85C	10k		175J	Si△	C245e
119	SW22KBN805	2.2k	800	100H	15k§	10m	175J	Si	M747☑
120	SW22KBR805	2.2k	800	100H	17k	10m	175J	Si	S435j
121	801PDB220	2.2k	800	105C	8.0k§	8.3m	200J	Si	E200b
122	DN761-22	2.2k	800	150J	12k	10m	150J	Si#	M1337
123	DN662-22	2.2k	800	175J	12k	10m	175J	Si#	M1337
124	S1104SXU22	2.2k	850	100C	16k§	10m	175J	Si	M759☑
125	A540LB	2.2k	1.0k	100C	12k	8.3m	200	Si△	M463
126	NLA540LB	2.2k	1.0k	100C	12k	8.3m	200J	Si	C246b
127	1001PDE220	2.2k	1.0k	107C			200J	Si△	M1277
128	1101PDK220	2.2k	1.1k	100C	18k§	8.3m	175J	Si△	C245a
129	DS904SM22	2.2k	1.11k	55C	9.0k§	10m	200S	Si△	C245b
130	AR904P22	2.2k	1150	55H	9.0k§	10m	175J	Si△	M1005§%
131	AR904S22	2.2k	1150	55H	9.0k§	10m	175J	Si△	M1005♦%
132	HD1500-22	2.2k	1.2k	150J	18k	8.3m	150J	Si	M637c
133	R9G0221300	2.2k	1.3k	190J	12k	8.3m	190J	Si	C246d
134	A641LB	2.2k	1.5k	65C	17k		175J	Si	C246b
135	AR1104P22	2.2k	1550	55H	175k§	10m	175J	Si△	M1005§%
136	AR1104S22	2.2k	1550	55H	175k§	10m	175J	Si△	M1005♦%
137	DS1104SM22	2.2k	1.55k	55C	16k§	10m	200S	Si△	M757
138	1601PDK220	2.2k	1.6k	82C	25k§	8.3m	175J	Si△	C245a
139	JD2300-22	2.2k	1.7k	150J	35k	8.3m	150J	Si	M946
140	A730LB	2.2k	1.8k	100C	25k		175J	Si	M1148
141	DN961-22	2.2k	1.9k	175J	27k	10m	175J	Si	C2460
142	RA202220XX00	2.2k	2.0k		24k		175J	Si	C246n
143	DS2004SN22	2.2k	2.0k	55C	25k§	10m	180S	Si△	M954
144	SSiP60120	2.2k	2.06k	92	17k	10m	180	Si△	C246j
145	AR3007P22	2.2k	2.2k	55H	27k§	10m	150J	Si△	M1006§%
146	AR3007S22	2.2k	2.2k	55H	27k§	10m	150J	Si△	M1006♦%
147	SW22CXC990	2.2k	2.2k	55H	28k	10m	160J	Si	DO200A
148▼	D2200N2200	2.2k	2.2k	100C	41k§	10m	160J	Si	M1146a
149▼	D2209N2200	2.2k	2.2k	100C	41k§	10m	160J	Si	M1346d
150	AR2004P22	2.2k	2250	55H	25k§	10m	175J	Si△	M1006§%
151	AR2004S22	2.2k	2250	55H	25k§	10m	175J	Si△	M1006♦%
152	SW22CXC950	2.2k	2.4k	25H	25k	10m	160J	Si△	C246d
153	JD3000-22	2.2k	2.4k	150J	45k	8.3m	150J	Si	M946
154	SSiR60120	2.2k	2.5k		47k	10m	160J	Si	S561b
155	D1800/2200	2.2k	2.5k	63C	34k	10m	150J	Si	C244b
156	2601PDN220	2.2k	2.6k	82C	40k§	8.3m	175J	Si△	C1002☑
157	DS2106SU22	2.2k	2.62k	55H	50k	10m	150J	Si	M1207
158	JD4000-22	2.2k	3.0k	150J	50k	8.3m	150J	Si	M946
159	SSiT60120	2.2k	4.2k		85k	10m	160J	Si	S561c
160	DSA400-23NC	2.3k		98C	9.8k	10m	150J	Si	
161	DSA304-23A	2.3k	300	100C	4.3k§	10m	150J	Si	C240e
162	301U230	2.3k	300	120C	6.2k	8.3m	200J	Si	DO9☑
163	303U230	2.3k	300	120C	5.9k	6.0m	200J	Si	S551
164	309U230	2.3k	300	120C	5.9k	6.0m	200J	Si	S467
165	A432LC	2.3k	450	90C	7.4k		150J	Si△	C245e
166	DSA400-23KC	2.3k	450	90C	9.8k	10m	105J	Si	M1214
167	DSA503-23GE	2.3k	450	110C	12k	10m	150J	Si	M1215
168	DSA503-23L1E	2.3k	450	110C	12k	10m	150J	Si	M1215
169	471PDA230	2.3k	470	105C	5.9k	6.0m	200J	Si	E200a
170	501V230	2.3k	500	105C	8.0k§	8.3m	200J	Si△	S120g☑
171	501VF230	2.3k	500	105C	8.0k	8.3m	200J	Si	S525
172	503V230	2.3k	500	105C	8.0k		200J	Si	S563
173	501VR230	2.3k	500	120C	8.0k§	8.3m	200J	Si△	S120g☑
174	A402EB	2.3k	600	60	6.0k		150J	Si	C246b
175	S904SXU23	2.3k	600	100C	9.0k§	10m	175J	Si	M759☑
176	S954SXU23	2.3k	680	100C	9.0k§	10m	175J	Si	M759☑
177	A500LC	2.3k	740	100C	10k	8.3m	175	Si△	M463
178	801PDB230	2.3k	800	105C	8.0k§	8.3m	200J	Si	E200b
179	S1104SXU23	2.3k	850	100C	16k§	10m	175J	Si	M759☑
180	DSA605-23AE	2.3k	955	50C	12k	10m	150J	Si	M953
181	A540LC	2.3k	1.0k	100C	12k	8.3m	200	Si△	M463
182	NLA540LC	2.3k	1.0k	100C	12k	8.3m	200J	Si	C246b
183	1001PDE230	2.3k	1.0k	107C			200J	Si△	M1277
184	DS904SM23	2.3k	1.11k	55C	9.0k§	10m	200S	Si△	C245b
185	AR904P23	2.3k	1150	55H	9.0k§	10m	175J	Si△	M1005§%
186	AR904S23	2.3k	1150	55H	9.0k§	10m	175J	Si△	M1005♦%
187	DSA1208-23AE	2.3k	1240	100	23k	8.3m	150	Si	M246l
188	A641LC	2.3k	1.5k	65C	17k		175J	Si	C246b
189	AR1104P23	2.3k	1550	55H	175k§	10m	175J	Si△	M1005§%
190	AR1104S23	2.3k	1550	55H	175k§	10m	175J	Si△	M1005♦%
191	DS1104SM23	2.3k	1.55k	55C	16k§	10m	200S	Si△	M757
192	1601PDK230	2.3k	1.6k	82C	25k§	8.3m	175J	Si△	C245a
193	A730LC	2.3k	1.8k	100C	25k		175J	Si	M1148
194	DS2004SN23	2.3k	2.0k	55C	25k§	10m	180S	Si△	M954
195	AR3007P23	2.3k	2.2k	55H	27k§	10m	150J	Si△	M1006§%
196	AR3007S23	2.3k	2.20k	55H	27k§	10m	150J	Si△	M1006♦%
197	AR2004P23	2.3k	2250	55H	25k§	10m	175J	Si△	M1006§%
198	AR2004S23	2.3k	2250	55H	25k§	10m	175J	Si△	M1006♦%
199	2601PDN230	2.3k	2.6k	82C	40k§	8.3m	175J	Si△	C1002☑
200	DS2106SU23	2.3k	2.62k	55H	50k	10m	150J	Si	M1207
201	JD4000-23	2.3k	3.0k	150J	50k	8.3m	150J	Si	M946
202	1N1137	2.4k	.005	75	3.5	5.0m	170	Si	F57d
203	HV24A	2.4k	.05	50A	17 §	10m	175A	Si	A3t
204	MV24A	2.4k	.05	50A	16 §	10m	175A	Si	A3h
205	1N1138	2.4k	.06	75	3.5	5.0m	170	Si	F57e
206	1N2377	2.4k	75m	100A	12	8.3m	150A	Si	A1hq
207	10R24B	2.4k	.10	25	60		175	Si	
208	1N1413	2.4k	.125	75A	6.0		150	Si	A149
209	HV24B	2.4k	.20	50A	17 §	10m	175A	Si	A3t
210	MV24B	2.4k	.20	50A	16 §	10m	175A	Si	A3h
211	1N2894	2.4k	250m	25A			150S	Si	M122b
212	1N2895	2.4k	250m	25A			150S	Si	A83ak
213	67D024H55FNN	2.4k	250m	50A	35		150A	Si	F12aj
214	HVC240	2.4k	.25	55A	7.5		150	Si	M291a
215	1N1749	2.4k	.32	75C	6.0		150	Si	F12s
216	1N1112	2.4k	.35	100	21	4.0m	150	Si	F22e
217	1N1750	2.4k	.38	75C	6.0		150	Si	F12r
218	673-8	2.4k	0.4	25A	15	8.3	150	Si	M1166a♦
219	HV24C	2.4k	.40	50A	17 §	10m	175A	Si	A3t
220	MV24C	2.4k	.40	50A	16 §	10m	175A	Si	A3h

SYMBOLS AND CODES EXPLAINED IN INTERPRETER

11. RECTIFIERS, HIGH VOLTAGE - PIV ≥ 2 kV (Cont'd)

IN ORDER OF: (1) PIV (2) IO MAX (3) @ TEMP & (4) TYPE NUMBER

LINE No.	4 TYPE NUMBER	1 PIV (V)	MAX AVG FWD DC CURRENT 2 Io MAX (A)	3 @ TEMP (°C)	MAX RATING SURGE CURR PEAK 1 Cy (A)	PULSE WIDTH (s)	MAX. TEMP (°C)	MAT	DRAWING NO.
1	SLD2.4S	2.4k	400m	50A	30	8.0m	150A	Si	F22e
2	SLD2.4T	2.4k	400m	50A	30	8.0m	150A	Si	F57e
3	SLD2.4TS	2.4k	400m	50A	30	8.0m	150A	Si	F57e
4	SLD2.4V	2.4k	400m	50A	30	8.0m	150A	Si	A1hq
5	75R24B	2.4k	.75	25	60		175	Si	
6	100R24B	2.4k	1.0	25	60		175	Si	
7	67C024H20LSS	2.4k	1.25	50A	90		140A	Si	M101g
8	1N2664	2.4k	1.5	25A	15	8.3m	165A	Si	M126c
9	150R24B	2.4k	1.5	25	60		175	Si	
10	200R24B	2.4k	2.0	25	60		175	Si	
11	250R24B	2.4k	2.5	25	250		175	Si	
12	1N2724	2.4k	3.0	25A	15	8.3m	165A	Si	M126j
13	300R24B	2.4k	3.0	25	250		175	Si	
14	1N4538	2.4k*	3.0	100C	15 §	8.3m	175C	Si	DO4
15	350R24B	2.4k	3.5	25	250		175	Si	
16	400R24B	2.4k	4.0	25	250		175	Si	
17	450R24B	2.4k	4.5	25	250		175	Si	
18	500R24B	2.4k	5.0	25	250		175	Si	
19	550R24B	2.4k	5.5	25	250		175	Si	
20	600R24B	2.4k	6.0	25	250		175	Si	
21	SSiE4383A	2.4k	35	120C	300		175J	Si	M1218
22	SSiE4483A	2.4k	35	120C	300		175J	Si	M1218
23	SV10-24RK	2.4k	100	175J	2.2k	10m	175J	Si#	S569
24	SV10-24RM	2.4k	100	175J	2.2k	10m	175J	Si#	S569
25	R620243000	2.4k	300	102C	5.5k	8.3m	150J	Si	C242
26	301U240	2.4k	300	120C	6.2k	8.3m	200J	Si	DO9⊠
27	303U240	2.4k	300	120C	5.9k	6.0m	200J	Si	S551
28	309U240	2.4k	300	120C	5.9k	6.0m	200J	Si	S467
29	SW24HHN320	2.4k	320	100C	4.0k§	10m	180J	Si	M1155a⊠
30	SW24PHN320	2.4k	320	100C	4.0k§	10m	180J	Si	M1155a⊠
31	SW24HHN380	2.4k	370	100C	5.5k§	10m	180J	Si	M1155a⊠
32	SW24PHN380	2.4k	370	100C	5.5k§	10m	180J	Si	M1155a⊠
33	SKN400/24	2.4k	400	100C	7.5k	10m	160J	Si	S510
34▼	D405NR2400	2.4k	400	130C	9.0k§	10m	180J	Si	M1347
35	FD600-24	2.4k	430	150J	5.5k	8.3m	190J	Si	M637a
36	A432LD	2.4k	450	90C	7.4k		150J	Si△	C245e
37	471PDA240	2.4k	470	105C	5.9k	6.0m	200J	Si	E200a
38	501V240	2.4k	500	105C	8.0k§	8.3m	200J	Si△	S120g⊠
39	501VF240	2.4k	500	105C	8.0k	8.3m	200J	Si	S525
40	503V240	2.4k	500	105C	8.0k		200J	Si	S563
41	501VR240	2.4k	500	120C	8.0k§	8.3m	200J	Si△	S120g⊠
42	S1107SXU24	2.4k	570	100C	12k§	10m	150J	Si	M759⊠
43	A402EC	2.4k	600	60	6.0k		150J	Si	C246b
44	R720240600	2.4k	600	87C	7.0k	8.3m	150J	Si	C246f
45	S904SXU24	2.4k	600	100C	9.0k§	10m	175J	Si	M759⊠
46	DF652-24	2.4k	600	150J	9.0k	10m	150J	Si#	M1337
47	SW24KBN635	2.4k	630	100H	13k§	10m	160J	Si	M747⊠
48	SW24KBR635	2.4k	630	100H	14k	10m	160J	Si	S435j
49	GD800-24	2.4k	640	150J	8.0k	8.3m	150J	Si	M637
50▼	D668N2400	2.4k	670	100C	10k§	10m	150J	Si	M1346a
51	S954SXU24	2.4k	680	100C	9.0k§	10m	175J	Si	M759⊠
52	A500LD	2.4k	740	100C	10k	8.3m	175	Si△	M463
53	A433LD	2.4k	750	85C	10k		175J	Si△	C245e
54	A442LD	2.4k	800	90C	14k		150J	Si△	C245e
55	801PDB240	2.4k	800	105C	8.0k§	8.3m	200J	Si	E200b
56	DN761-24	2.4k	800	150J	12k	10m	150J	Si#	M1337
57	DN662-24	2.4k	800	175J	12k	10m	175J	Si#	M1337
58	S1104SXU24	2.4k	850	100C	16k§	10m	175J	Si	M759⊠
59	SKN870/24	2.4k	870	100C	105	10m	150J	Si	C246c
60	A540LD	2.4k	1.0k	100C	12k	8.3m	200	Si△	M463
61	NLA540LD	2.4k	1.0k	100C	12k	8.3m	200J	Si	C246b
62	1001PDE240	2.4k	1.0k	107C			200J	Si△	M1277
63	DS1107SM24	2.4k	1.1k	55C	12k§	10m	175S	Si△	C245b
64	1101PDK240	2.4k	1.1k	100C	18k§	8.3m	175J	Si△	C245a
65	AR1107P24	2.4k	1110	55H	12k§	10m	150J	Si△	M1005§%
66	AR1107S24	2.4k	1110	55H	12k§	10m	150J	Si△	M1005♦%
67	DS904SM24	2.4k	1.11k	55C	9.0k§	10m	200S	Si△	C245b
68	AR904P24	2.4k	1150	55H	9.0k§	10m	175J	Si△	M1005§%
69	AR904S24	2.4k	1150	55H	9.0k§	10m	175J	Si△	M1005♦%
70	HD1500-24	2.4k	1.2k	150J	18k	8.3m	150J	Si	M637c
71	R9G0241300	2.4k	1.3k	190J	12k	8.3m	190J	Si	C246d
72	AR2009P24	2.4k	1400	55H	17k§	10m	150J	Si△	M1006§%
73	AR2009S24	2.4k	1400	55H	17k§	10m	150J	Si△	M1006♦%
74	A641LD	2.4k	1.5k	65C	17k		175J	Si	C246b
75	AR1104P24	2.4k	1550	55H	175k§	10m	175J	Si△	M1005§%
76	AR1104S24	2.4k	1550	55H	175k§	10m	175J	Si△	M1005♦%
77	DS1104SM24	2.4k	1.55k	55C	16k§	10m	200S	Si△	M757
78	1601PDK240	2.4k	1.6k	82C	25k§	8.3m	175J	Si△	C245a
79	DS2007SN24	2.4k	1.7k	55C	20k		150J	Si	M954
80	JD2300-24	2.4k	1.7k	150J	35k	8.3m	150J	Si	M946
81	A730LD	2.4k	1.8k	100C	25k		175J	Si	M1148
82▼	D1800N2400	2.4k	1.8k	100C	31k§	10m	160J	Si	M1146a
83▼	D1809N2400	2.4k	1.8k	100C	31k§	10m	160J	Si	M1346d
84	DN961-24	2.4k	1.9k	175J	27k	10m	175J	Si	C2460
85	RA202420XX00	2.4k	2.0k		24k		175J	Si	C246n
86	DS2004SN24	2.4k	2.0k	55C	25k§	10m	180S	Si△	M954
87	AR3007P24	2.4k	2.2k	55H	27k§	10m	150J	Si△	M1006§%
88	AR3007S24	2.4k	2.2k	55H	27k§	10m	150J	Si△	M1006♦%
89	SW24CXC990	2.4k	2.2k	55H	28k	10m	160J	Si	DO200A
90▼	D2200N2400	2.4k	2.2k	100C	41k§	10m	160J	Si	M1146a
91▼	D2209N2400	2.4k	2.2k	100C	41k§	10m	160J	Si	M1346d
92	AR2004P24	2.4k	2250	55H	25k§	10m	175J	Si△	M1006§%
93	AR2004S24	2.4k	2250	55H	25k§	10m	175J	Si△	M1006♦%
94	SW24CXC950	2.4k	2.4k	25H	25k	10m	160J	Si△	C246d
95	JD3000-24	2.4k	2.4k	150J	45k	8.3m	150J	Si	M946
96	D1800N2400T	2.4k	2.5k	63C	30k	10m	150J	Si	C244b
97	2601PDN240	2.4k	2.6k	82C	40k§	8.3m	175J	Si△	C1002⊠
98	DS2106SU24	2.4k	2.62k	55H	50k	10m	150J	Si	M1207
99	JD4000-24	2.4k	3.0k	150J	50k	8.3m	150J	Si	M946
100	SSiP67135	2.5k			10k	10m	135J	Si	S561a
101	SSiR67135	2.5k			25k	10m	135J	Si	S561b
102	523MH5AS1	2.5k	1.1m	55A	125		125J	Si	A440
103	2L25	2.5k	.02	25	10	8.3m	175	Si	A1jz
104	DD25	2.5k	30m	25A	4.0	8.3	100A	Si	A109b
105	5L25	2.5k	.05	25	10	8.3m	175	Si	A1jz
106	VA25	2.5k	50m	40A	3.0	8.3m	150A	Si△	A1m
107	M25F	2.5k	80m	55A	8.0		150A	Si	A1abd
108	M25S	2.5k	80m	55A	8.0		150A	Si	A1abd
109	M25UF	2.5k	80m	55A	8.0		150A	Si	A1abd
110	HV25PD	2.5k	80m	100A			150A	Si	A94q
111	1N3285	2.5k	.10	25A	2.5		150A	Si△	DO7
112	10L25	2.5k	.10	25	20	8.3m	175	Si	A1jz
113	15L25	2.5k	.15	25	20	8.3m	175	Si	A1jz
114	15N25A9	2.5k	150m	25	20	8.3m	175	Si	
115	15N25A	2.5k	150m	25	20	8.3m	175	Si	
116	20L25	2.5k	.20	25	20	8.3m	175	Si	A1jz
117	B427-25	2.5k	200m	55	4.0		150	Si△	A50f
118	B587-25	2.5k	200m	55	4.0			Si△	A69r
119	MC5602	2.5k	200m	100	10			Si	A60w
120	DR150	2.5k	250m		10	20m	150J	Si	A283a
121	1N2896	2.5k	250m	25A			150S	Si	M122b
122	1N2897	2.5k	250m	25A			150S	Si	A83ak
123	25L25	2.5k	.25	25	20	8.3m	175	Si	A1jz
124	EH250	2.5k	.25	50A	25		150A	Si	A3c
125	HS25	2.5k	250m	50	14	8.3m	175	Si	A298ad
126	HVE25	2.5k	250m	50	14	8.3m	175A	Si	A298s
127	1N3871	2.5k	250m	60A	2.0 §		200A	Si	A1ds
128	30L25	2.5k	.30	25	40	8.3m	175	Si	A1jz
129	EG250	2.5k	350m	50A	30	8.0m	150A	Si	A3aa
130	350S25	2.5k	350m	55	30	8.3m	150A	Si	A1tp
131	424MH5AS1	2.5k	350m	55A	35		110J	Si	A443
132	350RS25	2.5k	350m	85	30		150A	Si△	A1tpØ
133	40L25	2.5k	.40	25	40	8.3m	175	Si	A1jz
134	424MD5AE1	2.5k	450m	55C	35		110A	Si	M978†⊠
135	424MH5AE1	2.5k	450m	55C	35		110A	Si	M978†⊠
136	R2500	2.5k	0.5		30	8.0m	175A	Si	DO41
137	50L25	2.5k	.50	25	40	8.3m	175	Si	A1jz
138	SP25F	2.5k	500m	55A	40		150A	Si	A443
139	60L25	2.5k	.60	25	40	8.3m	175	Si	A1jz
140	US25	2.5k	600m	25A	20	8.3m	150	Si	A1aah
141	423MD6AH1	2.5k	0.60	50A			150A	Si	M1233
142	423MD5AE1	2.5k	600m	55C	50		125A	Si	M978†⊠
143	423MH5AE1	2.5k	600m	55C	50		125A	Si	M978†⊠
144	B588-25	2.5k	700m	55	25			Si△	A69s
145	BA223-25	2.5k	700m	55	25			Si△	A1rx
146	524MH5AS1	2.5k	750m	55A	100		110J	Si	A440
147	1N4377	2.5k	.75	85A	50		125A	Si	M175
148	80L25	2.5k	.80	25	60	8.3m	175	Si	A1jz
149	524MD5AE1	2.5k	850m	55C	100		110A	Si	M978†⊠
150	524MH5AE1	2.5k	.85	55C	100		110A	Si	M978†⊠
151	424MC5AE1	2.5k	900m	55C	35		110A	Si	M978†⊠
152	1N3932	2.5k	1.0					Si	
153	100L25	2.5k	1.0	25	60	8.3m	175	Si	A1jz
154	423MB6AH1	2.5k	1.00	50A	50		150A	Si	M1233
155	HVC25	2.5k	1.0	50A	80	8.3m	125A	Si*	A1ey
156	SX25	2.5k	1.0	50	60	8.3m	150	Si	A344b
157	SXS25	2.5k	1.0	50	60	8.3m	150	Si	A344b
158	SDHF2.5KM	2.5k	1.0	55A	50		175J	Si	M978
159	Z25UF	2.5k	1.0	55A	60		150A	Si	A1abc
160	PS2350	2.5k	1.1	25A			175A	Si	M22
161	USB2.5	2.5k	1.1	25C	80	8.3m	150	Si	S543
162	423MC5AE1	2.5k	1.2	55C	50		125A	Si	M978†⊠
163	523MH5AE1	2.5k	1.2	55C	125		125A	Si	M978†⊠
164	523ND4AE1	2.5k	1.2	55C	125		125A	Si	M978†⊠
165	1N4866	2.5k	1.25	40A	150 §		125A	Si	M326
166	423MC6AH1	2.5k	1.25	50A	50		150A	Si	M1233
167	423MH6AH1	2.5k	1.25	50A	50		150A	Si	M1233
168	Z25F	2.5k	1.5	55A	60		150A	Si	A1abc
169	524MC5AE1	2.5k	1.7	55C	100		110A	Si	M978†⊠
170	Z25S	2.5k	2.0		60		150A	Si	A1abc
171	1N5599	2.5k	2.1	100C	100		150C	Si	S221
172	FP25F	2.5k	2.2	55A	200		150A	Si	A440
173	FP25S	2.5k	2.2	55A	200		150A	Si	A440
174	HVHS2500	2.5k	2.2	55A	200	8.3m	150A	Si	A138w
175	HC2500F	2.5k	2.2	75C	100			Si	M1273
176	523NC4AE1	2.5k	2.4	55C	125		125A	Si	M978†⊠
177	SDHF2.5KS	2.5k	2.5	55A	150		175J	Si	M978
178	KX25	2.5k	3.0	50	200	8.3m	150	Si	A344a
179	KXS25	2.5k	3.0	50	200	8.3m	150	Si	A344a
180	HC2500C	2.5k	3.0	75C	100			Si	M1273
181	J650-8	2.5k	3.0	75C	100			Si	S507
182	S6HVM2.5	2.5k	4.0	55	250		150S	Si	S416
183	S9HVM2.5	2.5k	4.0	55	350		150S	Si	S416
184	HD2500F	2.5k	4.5	75C	100			Si	M1273
185	1N5602	2.5k	4.6	100C	200		150C	Si	S293
186	SDA168K	2.5k	5.0	55C	150		125	†	M1159
187	1N3922	2.5k	5.0	100C	100	8.3m	200C	Si	DO4
188	HD2500S	2.5k	6.0	75C	200			Si	M1273
189	J650-2	2.5k	6.0	75C	200			Si	S507
190	UDE2.5	2.5k	6.0	100C	200	8.3m	150	Si	S542
191	J650-1	2.5k	6.6	75C	200			Si	S508
192	1N3927	2.5k	10	100C	100	8.3m	200C	Si	DO4
193	SCHS2500	2.5k	20.0	55	150		175A	Si	A138w
194	HRSCHS2500	2.5k	20	150	150			Si	A138w
195	SSF25	2.5k	100	55	5.0		175	Si	A83de
196	100MAB250	2.5k	100	100C	2.0k	10m	150J	Si	S435e
197	100EXD21	2.5k	100	118C	2.0k	10m	150J	Si	C242c
198	SV10-25RK	2.5k	100	175J	2.2k	10m	175J	Si#	S569
199	SV10-25RM	2.5k	100	175J	2.2k	10m	175J	Si#	S569
200	153PJA250	2.5k	150	95C	2.0k	10m	150J	Si	M1246
201	SSiK24135	2.5k	190	80C	1.8k	10m	160J	Si*	S72m△⊠
202	SSiK25135	2.5k	190	80C	1.8k	10m	160J	Si*	S72m△⊠
203	200MAB250	2.5k	200	102C	5.0k	10m	150J	Si	S435f
204	200EXD21	2.5k	200	118C	4.0k	10m	150J	Si	C242d
205	DS170-25L	2.5k	210	80C	2.5k§	10m	150J	Si	S506j
206	H03CF	2.5k	300	90C	5.5k	10m	150J	Si	S517
207	303PJA250	2.5k	300	92C	5.0k	10m	150J	Si	M1246a
208	300EXD13	2.5k	300	94C	6.5k	10m	150J	Si	S530
209	301U250	2.5k	300	120C	6.2k	8.3m	200J	Si	DO9⊠
210	303U250	2.5k	300	120C	5.9k	6.0m	200J	Si	S551
211	309U250	2.5k	300	120C	5.9k	6.0m	200J	Si	S467
212	S962SXU25	2.5k	335	100C	5.6k§	10m	150J	Si	M759
213	400MAB250	2.5k	400	82C	7.5k	10m	150J	Si	S435d
214	SR400FH-50	2.5k	400	98C	10k§	8.3m	150J	Si△	S502a
215	400EXD21	2.5k	400	116C	6.5k	10m	150J	Si	C242e
216	A432LE	2.5k	450	90C	7.4k		150J	Si△	C245e
217	471PDA250	2.5k	470	105C	5.9k	6.0m	200J	Si	E200a
218	503PJA250	2.5k	500	93C	7.5k	10m	150J	Si	M1246b
219	501V250	2.5k	500	105C	7.6k	6.0m	200J	Si	S553
220	503V250	2.5k	500	105C	8.0k		200J	Si	S563

SYMBOLS AND CODES EXPLAINED IN INTERPRETER

11. RECTIFIERS, HIGH VOLTAGE - PIV ≥ 2 kV (Cont'd)

IN ORDER OF: (1) PIV (2) IO MAX (3) @ TEMP & (4) TYPE NUMBER

LINE No.	4 TYPE NUMBER	1 PIV (V)	MAX AVG FWD DC CURRENT 2 Io MAX (A)	3 @ TEMP (°C)	MAX RATING SURGE CURR PEAK 1 Cy (A)	PULSE WIDTH (s)	MAX. TEMP (°C)	MAT	DRAWING NO.
1	S1107SXU25	2.5k	570	100C	12k§	10m	150J	Si	M759Ø
2	AR912P25	2.5k	600	55H	5.6k§	10m	150J	SiΔ	M1005§%
3	AR912S25	2.5k	600	55H	5.6k§	10m	150J	SiΔ	M1005♦%
4	DS912SM25	2.5k	600	55C	5.6k§	10m	150J	SiΔ	M757
5	A402ED	2.5k	600	60	6.0k		150J	Si	C246b
6	FD500E50	2.5k	600	90C	10k§	8.3m	150J	SiΔ	C240d
7	1S2254	2.5k	600	93C	10k§	8.3m	150J	SiΔ	C240c
8	FD500DH50	2.5k	600	100C	11k§	8.3m	150J	SiΔ	M1344
9	S904SXU25	2.5k	600	100C	9.0k§	10m	175J	Si	M759Ø
10	DF652-25	2.5k	600	150J	9.0k	10m	150J	Si#	M1337
11	S954SXU25	2.5k	680	100C	9.0k§	10m	175J	Si	M759Ø
12	A500LE	2.5k	740	100C	10k	8.3m	175	SiΔ	M463
13	801F25H	2.5k	800	85	12k	20m	150J	Si	C241a
14	A442LE	2.5k	800	90C	14k		150J	SiΔ	C245e
15	C11CF	2.5k	800	95C	13k	10m	150J	Si	C242f
16	1S2265	2.5k	800	101C	14k§	8.3m	150J	SiΔ	C239b
17	FD1000A50	2.5k	800	101C	14k§	8.3m	150J	SiΔ	C239a
18	801PDB250	2.5k	800	105C	8.0k§	8.3m	200J	Si	E200b
19	801PJA250	2.5k	800	113C	16k	10m	150J	Si	M1247
20	800EXD26	2.5k	800	150J	12k	10m	150J	Si	C249
21	DN662-25	2.5k	800	175J	12k	10m	175J	Si#	M1337
22	S1104SXU25	2.5k	850	100C	16k§	10m	175J	Si	M759Ø
23	A540LE	2.5k	1.0k	100C	12k		175J	Si	C246b
24	1001PDE250	2.5k	1.0k	107C			200J	SiΔ	M1277
25	1003PJA250	2.5k	1.0k	108C	20k	10m	150J	Si	M1248
26	SSiP62135	2.5k	1.07k	92C	10k	10m	160J	SiΔ	C246k
27	DS1107SM25	2.5k	1.1k	55C	12k§	10m	175S	SiΔ	C245b
28	AR1107P25	2.5k	1110	55H	12k§	10m	150J	SiΔ	M1005§%
29	AR1107S25	2.5k	1110	55H	12k§	10m	150J	SiΔ	M1005♦%
30	DS904SM25	2.5k	1.11k	55C	9.0k§	10m	200S	SiΔ	C245b
31	AR904P25	2.5k	1150	55H	9.0k§	10m	175J	SiΔ	M1005§%
32	AR904S25	2.5k	1150	55H	9.0k§	10m	175J	SiΔ	M1005♦%
33	AR2009P25	2.5k	1400	55H	17k§	10m	150J	SiΔ	M1006§%
34	AR2009S25	2.5k	1400	55H	17k§	10m	150J	SiΔ	M1006♦%
35	A641LE	2.5k	1.5k	65C	17k		175J	Si	C246b
36	AR1104P25	2.5k	1550	55H	175k§	10m	175J	SiΔ	M1005§%
37	AR1104S25	2.5k	1550	55H	175k§	10m	175J	SiΔ	M1005♦%
38	DS1104SM25	2.5k	1.55k	55C	16k§	10m	200S	SiΔ	M757
39	A11CF	2.5k	1.6k	81C	26k	10m	150J	Si	M987
40	1601PDK250	2.5k	1.6k	82C	25k§	8.3m	175J	SiΔ	C245a
41	FD1600A50	2.5k	1.6k	91C	35k§	8.3m	150J	SiΔ	C244a
42	1600EXD24	2.5k	1.6k	150J	25k	10m	150J	Si	C249a
43	SKN2000/24	2.5k	1.65k	100	25k	10m	175	Si	C246l
44	DS2007SN25	2.5k	1.7k	55C	20k		150J	Si	M954
45	DN961-25	2.5k	1.9k	175J	27k	10m	175J	Si	C2460
46	SSiR62135	2.5k	2.0k		31k	10m	160J	Si	S561b
47	AR3007P25	2.5k	2.2k	55H	27k§	10m	150J	SiΔ	M1006§%
48	AR3007S25	2.5k	2.2k	55H	27k§	10m	150J	SiΔ	M1006♦%
49	DSP2500A25	2.5k	2.5k	81C	43k	10m	150J	Si	M1318
50	2601PDN250	2.5k	2.6k	82C	40k§	8.3m	175J	SiΔ	C1002Ø
51	DS2106SU25	2.5k	2.62k	55H	50k	10m	150J	Si	M1207
52	JD4000-25	2.5k	3.0k	150J	50k	8.3m	150J	Si	M946
53	FD3500AH-50	2.5k	3.5k	101C	70k§	8.3m	150J	SiΔ	M1019
54	10R26B	2.6k	.10	25	60		175	Si	
55	75R26B	2.6k	.75	25	60		175	Si	
56	100R26B	2.6k	1.0	25	60		175	Si	
57	150R26B	2.6k	1.5	25	60		175	Si	
58	200R26B	2.6k	2.0	25	60		175	Si	
59	250R26B	2.6k	2.5	25	250		175	Si	
60	300R26B	2.6k	3.0	25	250		175	Si	
61	350R26B	2.6k	3.5	25	250		175	Si	
62	400R26B	2.6k	4.0	25	250		175	Si	
63	450R26B	2.6k	4.5	25	250		175	Si	
64	500R26B	2.6k	5.0	25	250		175	Si	
65	550R26B	2.6k	5.5	25	250		175	Si	
66	600R26B	2.6k	6.0	25	250		175	Si	
67	R620263000	2.6k	300	102C	5.5k	8.3m	150J	Si	C242
68	S962SXU26	2.6k	335	100C	5.6k§	10m	150J	Si	M759
69	DSA401-26GE	2.6k	360	89C	8.3k	10m	150J	Si	M1215
70	DSA401-26LE	2.6k	360	89C	8.3k	10m	150J	Si	M1215
71▼	D405NR2600	2.6k	400	130C	9.0k§	10m	180J	Si	M1347
72	FD600-26	2.6k	430	150J	5.5k	8.3m	190J	Si	M637a
73	A432LM	2.6k	450	90C	7.4k		150J	SiΔ	C245e
74	DSA503-26GE	2.6k	450	110C	12k	10m	150J	Si	M1215
75	DSA503-26L1E	2.6k	450	110C	12k	10m	150J	Si	M1215
76	S1107SXU26	2.6k	570	100C	12k§	10m	150J	Si	M759Ø
77	AR912P26	2.6k	600	55H	5.6k§	10m	150J	SiΔ	M1005§%
78	AR912S26	2.6k	600	55H	5.6k§	10m	150J	SiΔ	M1005♦%
79	DS912SM26	2.6k	600	55C	5.6k§	10m	150J	SiΔ	M757
80	A402EE	2.6k	600	60	6.0k		150J	Si	C246b
81	R720260600	2.6k	600	87C	7.0k	8.3m	150J	Si	C246f
82	S904SXU26	2.6k	600	100C	9.0k§	10m	175J	Si	M759Ø
83	SW26KBR635	2.6k	630	100H	14k	10m	160J	Si	S435j
84	GD800-26	2.6k	640	150J	8.0k	8.3m	150J	Si	M637
85▼	D668N2600	2.6k	670	100C	10k§	10m	150J	Si	M1346a
86	S954SXU26	2.6k	680	100C	9.0k§	10m	175J	Si	M759Ø
87	A500LM	2.6k	740	100C	10k	8.3m	175	SiΔ	M463
88	A433LM	2.6k	750	85C	10k		175J	SiΔ	C245e
89	A442LM	2.6k	800	90C	14k		150J	SiΔ	C245e
90	DN761-26	2.6k	800	150J	12k	10m	150J	Si#	M1337
91	S1104SXU26	2.6k	850	100C	16k§	10m	175J	Si	M759Ø
92	DSA605-26AE	2.6k	955	50C	12k	10m	150J	Si	M953
93	A540LM	2.6k	1.0k	100C	12k		175J	Si	C246b
94	DS1107SM26	2.6k	1.1k	55C	12k§	10m	175S	SiΔ	C245b
95	1101PDK260	2.6k	1.1k	100C	18k§	8.3m	175J	SiΔ	C245a
96	AR1107P26	2.6k	1110	55H	12k§	10m	150J	SiΔ	M1005§%
97	AR1107S26	2.6k	1110	55H	12k§	10m	150J	SiΔ	M1005♦%
98	DS904SM26	2.6k	1.11k	55C	9.0k§	10m	200S	SiΔ	C245b
99	AR904P26	2.6k	1150	55H	9.0k§	10m	175J	SiΔ	M1005§%
100	AR904S26	2.6k	1150	55H	9.0k§	10m	175J	SiΔ	M1005♦%
101	HD1500-26	2.6k	1.2k	150J	18k	8.3m	150J	Si	M637c
102	DSA1208-26AE	2.6k	1240	100	23k	8.3m	150	Si	M246l
103	R9G0261300	2.6k	1.3k	190J	12k	8.3m	190J	Si	C246d
104	AR2009P26	2.6k	1400	55H	17k§	10m	150J	SiΔ	M1006§%
105	AR2009S26	2.6k	1400	55H	17k§	10m	150J	SiΔ	M1006♦%
106	A641LM	2.6k	1.5k	65C	17k		175J	Si	C246b
107	AR1104P26	2.6k	1550	55H	175k§	10m	175J	SiΔ	M1005§%
108	AR1104S26	2.6k	1550	55H	175k§	10m	175J	SiΔ	M1005♦%
109	DS1104SM26	2.6k	1.55k	55C	16k§	10m	200S	SiΔ	M757
110	DS2007SN26	2.6k	1.7k	55C	20k		150J	Si	M954
111	JD2300-26	2.6k	1.7k	150J	35k	8.3m	150J	Si	M946
112	RA202620XX00	2.6k	2.0k		24k		150J	Si	C246n
113	AR3007P26	2.6k	2.2k	55H	27k§	10m	150J	SiΔ	M1006§%
114	AR3007S26	2.6k	2.2k	55H	27k§	10m	150J	SiΔ	M1006♦%
115▼	D2200N2600	2.6k	2.2k	100C	41k§	10m	160J	Si	M1146a
116▼	D2209N2600	2.6k	2.2k	100C	41k§	10m	160J	Si	M1346d
117	JD3000-26	2.6k	2.4k	150J	45k	8.3m	150J	Si	M946
118	D1800/2600	2.6k	2.5k	63C	34k	10m	150J	Si	C244b
119	DS2106SU26	2.6k	2.62k	55H	50k	10m	150J	Si	M1207
120	S962SXU27	2.7k	335	100C	5.6k§	10m	150J	Si	M759
121	SKN400/27	2.7k	400	100C	7.5k	10m	160J	Si	S510
122	S1107SXU27	2.7k	570	100C	12k§	10m	150J	Si	M759Ø
123	AR912P27	2.7k	600	55H	5.6k§	10m	150J	SiΔ	M1005§%
124	AR912S27	2.7k	600	55H	5.6k§	10m	150J	SiΔ	M1005♦%
125	DS912SM27	2.7k	600	55C	5.6k§	10m	150J	SiΔ	M757
126	A402EM	2.7k	600	60	6.0k		150J	Si	C246b
127	S904SXU27	2.7k	600	100C	9.0k§	10m	175J	Si	M759Ø
128	S954SXU27	2.7k	680	100C	9.0k§	10m	175J	Si	M759Ø
129	A500LS	2.7k	740	100C	10k	8.3m	175	SiΔ	M463
130	A433LS	2.7k	750	85C	10k		175J	SiΔ	C245e
131	A442LS	2.7k	800	90C	14k		150J	SiΔ	C245e
132	800YKD26	2.7k	800	150J	12k	10m	150J	Si	C249
133	S1104SXU27	2.7k	850	100C	16k§	10m	175J	Si	M759Ø
134	DS1107SM27	2.7k	1.1k	55C	12k§	10m	175S	SiΔ	C245b
135	AR1107P27	2.7k	1110	55H	12k§	10m	150J	SiΔ	M1005§%
136	AR1107S27	2.7k	1110	55H	12k§	10m	150J	SiΔ	M1005♦%
137	DS904SM27	2.7k	1.11k	55C	9.0k§	10m	200S	SiΔ	C245b
138	AR904P27	2.7k	1150	55H	9.0k§	10m	175J	SiΔ	M1005§%
139	AR904S27	2.7k	1150	55H	9.0k§	10m	175J	SiΔ	M1005♦%
140	AR2009P27	2.7k	1400	55H	17k§	10m	150J	SiΔ	M1006§%
141	AR2009S27	2.7k	1400	55H	17k§	10m	150J	SiΔ	M1006♦%
142	AR1104P27	2.7k	1550	55H	175k§	10m	175J	SiΔ	M1005§%
143	AR1104S27	2.7k	1550	55H	175k§	10m	175J	SiΔ	M1005♦%
144	DS1104SM27	2.7k	1.55k	55C	16k§	10m	200S	SiΔ	M757
145	DS2007SN27	2.7k	1.7k	55C	20k		150J	Si	M954
146	AR3007P27	2.7k	2.2k	55H	27k§	10m	150J	SiΔ	M1006§%
147	AR3007S27	2.7k	2.2k	55H	27k§	10m	150J	SiΔ	M1006♦%
148	DS2106SU27	2.7k	2.62k	55H	50k	10m	150J	Si	M1207
149	HV28A	2.8k	50m	50A	17 §	10m	175A	Si	A3t
150	MV28A	2.8k	50m	50A	16 §	10m	175A	Si	A3h
151	10R28B	2.8k	.10	25	60		175	Si	
152	HV28B	2.8k	.15	50A	17 §	10m	175A	Si	A3t
153	MV28B	2.8k	.15	50A	16 §	10m	175A	Si	A3h
154	1N2632	2.8k	200m	70$	5.0		100A	Si	M84a
155	CP121	2.8k	.20	75				Si	M84ak
156	1N2898	2.8k	250m	25A			150S	Si	M122c
157	1N2899	2.8k	250m	25A			150S	Si	A83ax
158	1N1113	2.8k	.33	100	20	4.0m	150	Si	F22f
159	HV28C	2.8k	.35	50A	17 §	10m	175A	Si	A3t
160	MV28C	2.8k	.35	50A	16 §	10m	175A	Si	A3h
161	SLD2.8S	2.8k	350m	50A	30	8.0m	150A	Si	F22f
162	1N1239	2.8k	.50	100A			100A	Si	M84n
163	S5162	2.8k	.50	100A			100A	Si	M84cb
164	75R28B	2.8k	.75	25	60		175	Si	
165	100R28B	2.8k	1.0	25	60		175	Si	
166	150R28B	2.8k	1.5	25	60		175	Si	
167	200R28B	2.8k	2.0	25	60		175	Si	
168	250R28B	2.8k	2.5	25	250		175	Si	
169	300R28B	2.8k	3.0	25	250		175	Si	
170	350R28B	2.8k	3.5	25	250		175	Si	
171	400R28B	2.8k	4.0	25	250		175	Si	
172	450R28B	2.8k	4.5	25	250		175	Si	
173	500R28B	2.8k	5.0	25	250		175	Si	
174	550R28B	2.8k	5.5	25	250		175	Si	
175	600R28B	2.8k	6.0	25	250		175	Si	
176	FD3500AH-56	2.8k	200	101H	70k§	8.3m	150J	SiΔ	M1019
177	D150/2800B	2.8k	225	60C	3.3k	10m	150J	Si	S499
178▼	D269/2800	2.8k	270	100C	3.8k§	10m	150J	Si	M1346C
179	R620283000	2.8k	300	102C	5.5k	8.3m	150J	Si	C242
180	S962SXU28	2.8k	335	100C	5.6k§	10m	150J	Si	M759
181▼	D405NR2800	2.8k	400	130C	9.0k§	10m	180J	Si	M1347
182	FD600-28	2.8k	430	150J	5.5k	8.3m	190J	Si	M637a
183	S1107SXU28	2.8k	570	100C	12k§	10m	150J	Si	M759Ø
184	AR912P28	2.8k	600	55H	5.6k§	10m	150J	SiΔ	M1005§%
185	AR912S28	2.8k	600	55H	5.6k§	10m	150J	SiΔ	M1005♦%
186	DS912SM28	2.8k	600	55C	5.6k§	10m	150J	SiΔ	M757
187	R720280600	2.8k	600	87C	7.0k	8.3m	150J	Si	C246f
188	S904SXU28	2.8k	600	100C	9.0k§	10m	175J	Si	M759Ø
189	SW28KBN635	2.8k	630	100H	13k§	10m	160J	Si	M747Ø
190	SW28KBR635	2.8k	630	100H	14k	10m	160J	Si	S435j
191	GD800-28	2.8k	640	150J	8.0k	8.3m	150J	Si	M637
192▼	D668N2800	2.8k	670	100C	10k§	10m	150J	Si	M1346a
193	S954SXU28	2.8k	680	100C	9.0k§	10m	175J	Si	M759Ø
194	A500LN	2.8k	740	100C	10k	8.3m	175	SiΔ	M463
195	A433LN	2.8k	750	85C	10k		175J	SiΔ	C245e
196	A442LN	2.8k	800	90C	14k		150J	SiΔ	C245e
197	C11CJ	2.8k	800	95C	13k	10m	150J	Si	C242f
198	1S2266	2.8k	800	101C	14k§	8.3m	150J	SiΔ	C239b
199	FD1000A56	2.8k	800	101C	14k§	8.3m	150J	SiΔ	C239a
200	DN761-28	2.8k	800	150J	12k	10m	150J	Si#	M1337
201	S1104SXU28	2.8k	850	100C	16k§	10m	175J	Si	M759Ø
202	DS1107SM28	2.8k	1.1k	55C	12k§	10m	175S	SiΔ	C245b
203	1101PDK280	2.8k	1.1k	100C	18k§	8.3m	175J	SiΔ	C245a
204	AR1107P28	2.8k	1110	55H	12k§	10m	150J	SiΔ	M1005§%
205	AR1107S28	2.8k	1110	55H	12k§	10m	150J	SiΔ	M1005♦%
206	DS904SM28	2.8k	1.11k	55C	9.0k§	10m	200S	SiΔ	C245b
207	AR904P28	2.8k	1150	55H	9.0k§	10m	175J	SiΔ	M1005§%
208	AR904S28	2.8k	1150	55H	9.0k	10m	175J	SiΔ	M1005♦%
209	HD1500-28	2.8k	1.2k	150J	18k	8.3m	150J	Si	M637c
210	R9G0281300	2.8k	1.3k	190J	12k	8.3m	190J	Si	C246d
211	AR2009P28	2.8k	1400	55H	17k§	10m	150J	SiΔ	M1006§%
212	AR2009S28	2.8k	1400	55H	17k§	10m	150J	SiΔ	M1006♦%
213	AR1104P28	2.8k	1550	55H	175k§	10m	175J	SiΔ	M1005§%
214	AR1104S28	2.8k	1550	55H	175k§	10m	175J	SiΔ	M1005♦%
215	DS1104SM28	2.8k	1.55k	55C	16k§	10m	200S	SiΔ	M757
216	DS2007SN28	2.8k	1.7k	55C	20k		150J	Si	M954
217	JD2300-28	2.8k	1.7k	150J	35k	8.3m	150J	Si	M946
218▼	D1800N2800	2.8k	1.8k	100C	31k§	10m	160J	Si	M1146a
219▼	D1809N2800	2.8k	1.8k	100C	31k§	10m	160J	Si	M1346d
220	RA202820XX00	2.8k	2.0k		24k		150J	Si	C246n

SYMBOLS AND CODES EXPLAINED IN INTERPRETER

11. RECTIFIERS, HIGH VOLTAGE - PIV ≥ 2 kV (Cont'd)

IN ORDER OF: (1) PIV (2) IO MAX (3) @ TEMP & (4) TYPE NUMBER

LINE No.	4 TYPE NUMBER	1 PIV (V)	MAX AVG FWD DC CURRENT 2 Io MAX (A)	3 @ TEMP (°C)	MAX RATING SURGE CURR PEAK 1 Cy (A)	PULSE WIDTH (s)	MAX. TEMP (°C)	MAT	DRAWING NO.
1	AR3007P28	2.8k	2.2k	55H	27k§	10m	150J	Si△	M1006§%
2	AR3007S28	2.8k	2.2k	55H	27k§	10m	150J	Si△	M1006♦%
3▼	D2200N2800	2.8k	2.2k	100C	41k§	10m	160J	Si	M1146a
4▼	D2209N2800	2.8k	2.2k	100C	41k§	10m	160J	Si	M1346d
5	JD3000-28	2.8k	2.4k	150J	45k	8.3m	150J	Si	M946
6	D1800N2800T	2.8k	2.5k	63C	30k	10m	150J	Si	C244b
7	DS2106SU28	2.8k	2.62k	55H	50k	10m	150J	Si	M1207
8	S962SXU29	2.9k	335	100C	5.6k§	10m	150J	Si	M759
9	DSA401-29GE	2.9k	360	89C	8.3k	10m	150J	Si	M1215
10	DSA401-29LE	2.9k	360	89C	8.3k	10m	150J	Si	M1215
11	DSA503-29G	2.9k	450	100C	12k§	10m	150J	Si	M666a
12	DSA503-29GE	2.9k	450	110C	12k	10m	150J	Si	M1215
13	DSA503-29L1E	2.9k	450	110C	12k	10m	150J	Si	M1215
14	S1107SXU29	2.9k	570	100C	12k§	10m	150J	Si	M759Ø
15	AR912P29	2.9k	600	55H	5.6k§	10m	150J	Si△	M1005§%
16	AR912S29	2.9k	600	55H	5.6k§	10m	150J	Si△	M1005♦%
17	DS912SM29	2.9k	600	55C	5.6k§	10m	150J	Si△	M757
18	S904SXU29	2.9k	600	100C	9.0k§	10m	175J	Si	M759Ø
19	S954SXU29	2.9k	680	100C	9.0k§	10m	175J	Si	M759Ø
20	A500LT	2.9k	740	100C	10k	8.3m	175	Si△	M463
21	A433LT	2.9k	750	85C	10k		175J	Si△	C245e
22	A442LT	2.9k	800	90C	14k		150J	Si△	C245e
23	S1104SXU29	2.9k	850	100C	16k§	10m	175J	Si	M759Ø
24	DSA605-29AE	2.9k	955	50C	12k	10m	150J	Si	M953
25	DS1107SM29	2.9k	1.1k	55C	12k§	10m	175S	Si△	C245b
26	AR1107P29	2.9k	1110	55H	12k§	10m	150J	Si△	M1005§%
27	AR1107S29	2.9k	1110	55H	12k§	10m	150J	Si△	M1005♦%
28	DS904SM29	2.9k	1.11k	55C	9.0k§	10m	200S	Si△	C245b
29	AR904P29	2.9k	1150	55H	9.0k§	10m	175J	Si△	M1005§%
30	AR904S29	2.9k	1150	55H	9.0k	10m	175J	Si△	M1005♦%
31	DSA1208-29AE	2.9k	1240	100	23k	8.3m	150	Si	M246l
32	AR2009P29	2.9k	1400	55H	17k§	10m	150J	Si△	M1006§%
33	AR2009S29	2.9k	1400	55H	17k§	10m	150J	Si△	M1006♦%
34	AR1104P29	2.9k	1550	55H	175k§	10m	175J	Si△	M1005§%
35	AR1104S29	2.9k	1550	55H	175k§	10m	175J	Si△	M1005♦%
36	DS1104SM29	2.9k	1.55k	55C	16k§	10m	200S	Si△	M757
37	DS2007SN29	2.9k	1.7k	55C	20k		150J	Si	M954
38	AR3007P29	2.9k	2.2k	55H	27k§	10m	150J	Si△	M1006§%
39	AR3007S29	2.9k	2.2k	55H	27k§	10m	150J	Si△	M1006♦%
40	DS2106SU29	2.9k	2.62k	55H	50k	10m	150J	Si	M1207
41	HV-03SS	3.0k	2.0m	100C	500m	10m	110J	Si△	A3ae
42	MC159	3.0k	.01	25	1.0	8.0m		Si	A1db
43	10S30	3.0k	10m	55	1.0	8.3m	150A	Si	A1df
44	2L30	3.0k	.02	25	10	8.3m	175	Si	A1jz
45	MC158	3.0k	.02	25	2.0	8.0m		Si	A1db
46	VA30	3.0k	25m	40A	3.0	8.3m	150A	Si△	A1m
47	DD30	3.0k	30m	25A	4.0	8.3	100A	Si	A109b
48	MC157	3.0k	.04	25	3.0	8.0m		Si	A1db
49	MC1031	3.0k	.04	25				Si	A1cv
50	MC1031A	3.0k	.04	25				Si	A1cv
51	MC1032	3.0k	.04	25				Si	A1gr
52	MC1032A	3.0k	.04	25				Si	A1gr
53	M30F	3.0k	40m	55A	4.0		150A	Si	A1abd
54	M30S	3.0k	40m	55A	4.0		150A	Si	A1abd
55	M30UF	3.0k	40m	55A	4.0		150A	Si	A1abd
56	MHVG30	3.0k	50m		20	1.0m	125	Si	A249e
57	5L30	3.0k	50m	25	10	8.3m	175	Si	A1jz
58	MC031	3.0k	.05	25A			150A	Si	M54a
59	MC031A	3.0k	.05	25A			150A	Si	M54a
60	MC032	3.0k	.05	25A			150A	Si	M54c
61	MC032A	3.0k	.05	25A			150A	Si	M54c
62	PS2423	3.0k	.05	25A				Si	A1gb
63	NKV3F	3.0k	50m	40A	3.0		120J	Si	A334a
64	VB30	3.0k	50m	40A	3.0	8.3m	150A	Si△	A298m
65	VG3	3.0k	50m	40A	3.0	8.3m	150A	Si△	A298j
66	LK3	3.0k	50m	50A	2.0	8.0m	150A	Si	A3aa
67	50S30	3.0k	50m	55	2.0	8.3m	150A	Si	A1df
68	HV30E	3.0k	50m	100A			150A	Si	A1xe
69	HV30K	3.0k	50m	100A			150A	Si	A1fe
70	HV30M	3.0k	50m	100A			150A	Si	A1xd
71	HV30P	3.0k	50m	100A			150A	Si	A94q
72	1N1733A	3.0k	50m	175$	9.0	8.0m	200A	Si	A1qd
73	1N2378	3.0k	75m	100A	12	8.3m	150A	Si	A1hv
74	HV30PD	3.0k	80m	100A			150A	Si	A94q
75	1N3286	3.0k	.10	25A	2.5		150A	Si△	DO7
76	10L30	3.0k	.10	25	20	8.3m	175	Si	A1jz
77	10R30B	3.0k	.10	25	60		175	Si	
78	1N1733	3.0k	.15	25A	2.5	8.0m	150A	Si	A1jg
79	15L30	3.0k	.15	25	20	8.3m	175	Si	A1jz
80	PS1143	3.0k	.15	25A	2.5 §	8.0m	175A	Si	A1gc
81	20L30	3.0k	.20	25	20	8.3m	175	Si	A1jz
82	ME30	3.0k	200m	25A	2.5	10m	125J	Si	A1wm
83	B427-30	3.0k	200m	55	4.0		150	Si△	A50f
84	B587-30	3.0k	200m	55	4.0			Si△	A69r
85	HVC300	3.0k	.20	55A	6.0		150	Si	M291b
86	CP124	3.0k	.20	100				Si	M84an
87	MC5603	3.0k	200m	100	10			Si	A60w
88	1N2900	3.0k	250m	25A			150S	Si	M122b
89	1N2901	3.0k	250m	25A			150S	Si	A83ak
90	25L30	3.0k	.25	25	20	8.3m	175	Si	A1jz
91	M30K	3.0k	250m	25A	2.0	10m	150A	Si△	A83k
92	67D030H53PNN	3.0k	250m	50A	35		150A	Si	A1yu
93	EH300	3.0k	250m	50A	25	8.0m	150A	Si	A3aa
94	HS30#B	3.0k	250m	50	14	8.3m	175	Si	A298ad
95	HV30	3.0k	250m	50A	20	8.3m	125A	Si*	A1ty
96	HVE30	3.0k	250m	50	14	8.3m	175A	Si	A298s
97	SLD3V	3.0k	250m	50A	30	8.0m	150A	Si	A1hv
98	250S30	3.0k	250m	55	25	8.3m	150A	Si	A1tp
99	HVG-3	3.0k	250m	55A	20		150A	Si	A313e
100	SC30	3.0k	.25	55A	10	8.3m	175	Si	A1ds
101	BH300	3.0k	250m	75A	20	8.3m	150A	Si	DO27
102	GI250-3	3.0k	250m	75A	15		175	Si	E204p
103	30L30	3.0k	.30	25	40	8.3m	175	Si	A1jz
104	673-85	3.0k	0.3	25A	15	8.3	150	Si	M1166b♦
105	EG300	3.0k	350m	50A	30	8.0m	150A	Si	A3aa
106	350S30	3.0k	350m	55	30	8.3m	150A	Si	A1tp
107	350RS30	3.0k	350m	85	30		150A	Si△	A1tpØ
108	S3BR30	3.0k	0.36	55	14	20m	140B	Si*	S122Ø
109	40L30	3.0k	.40	25	40	8.3m	175	Si	A1jz
110	PS1443	3.0k	.40	25A	10	8.0m	175A	Si	F13b
111	SLD3U	3.0k	400m	25A	30	8.0m	150A	Si	Alja
112	SLDHV3	3.0k	.40	25A	22		175A	Si	M239b
113	CP123	3.0k	.40	100				Si	M84am
114	R3000	3.0k	0.5		30	8.0m	175A	Si	DO41
115	50L30	3.0k	.50	25	40	8.3m	175	Si	A1jz
116	B223-30	3.0k	.50	25	60		175A	Si	A1rx
117	US30	3.0k	500m	25A	20	8.3m	150	Si	A1aah
118	425SH6AB1	3.0k	500m	50A	50		150A	Si	A69am
119	HVC30	3.0k	500m	50A	60	8.3m	125A	Si*	A1ey
120	B588-30	3.0k	500m	55	25			Si△	A69s
121	BA223-30	3.0k	500m	55	25			Si△	A1rx
122	dc5R4	3.0k	550m	35A	50		125A	Si	M1195
123	60L30	3.0k	.60	25	40	8.3m	175	Si	A1jz
124	HV830	3.0k	600m	50	50	8.0m	175S	Si	M212h
125	SX30#B	3.0k	600m	50	40	8.3m	150	Si	A344b
126	SXS30	3.0k	600m	50	40	8.3m	150	Si	A344b
127	75R30B	3.0k	.75	25	60		175	Si	
128	Z30UF	3.0k	750m	55A	40		150A	Si	A1abc
129	1N4498	3.0k	.75	85A	35 §		125A	Si	M239
130	80L30	3.0k	.80	25	60	8.3m	175	Si	A1jz
131	SPCHV3	3.0k	800m	25A	23	8.3m	175A	Si	M950a*
132	SPFHV30	3.0k*	800m	25A			150A	Si	M950am
133	Z30F	3.0k	800m	55A	40		150A	Si	A1abc
134	PS2351	3.0k	.90	25A			175A	Si	M22
135	1N3933	3.0k	1.0					Si	
136	Z30S	3.0k	1.0		40		150A	Si	A1abc
137	100L30	3.0k	1.0	25	60	8.3m	175	Si	A1jz
138	100R30B	3.0k	1.0	25	60		175	Si	
139	SLD3	3.0k	1.1	30A	50		125A	Si△	M239b
140	TPFHV30	3.0k*	1.2	25A				Si	M950am
141	TPHHV30	3.0k*	1.2	25A				Si	M950am
142	M30	3.0k	1.25		7.0			Si	A294J
143	1N4867	3.0k	1.25	40A	150 §		125A	Si	M326b
144	67C030H20LSS	3.0k	1.25	50A	90		140A	Si	M101h
145	150R30B	3.0k	1.5	25	60		175	Si	
146	SC30F	3.0k	2.0		35			Si	M462
147	2ASLD3	3.0k	2.0	25A	200		175A	Si	M239b
148	2ASPC3	3.0k	2.0	25A	200	8.3m	100	Si	M950a*
149	200R30B	3.0k	2.0	25	60		175	Si	
150	VC30	3.0k	2.0	40C	50	8.3m	125A	Si△	M430
151	SPC3	3.0k	2.2	25A	50	8.3m	175A	Si	M950a*
152	SPF30	3.0k*	2.2	25A			150A	Si	M950am
153	KX30	3.0k	2.2	50	150	8.3m	150	Si	A344a
154	KXS30	3.0k	2.2	50	150	8.3m	150	Si	A344a
155	SPSHV30	3.0k*	2.4	25A				Si	M950am
156	250R30B	3.0k	2.5	25	250		175	Si	
157	300R30B	3.0k	3.0	25	250		175	Si	
158	KHP3	3.0k	3.0	25A	300		175A	Si△	M239u
159	SODSLD3	3.0k	3.0	30A	290		140A	Si△	M239u
160	1N4539	3.0k*	3.0	100C	15 §	8.3m	175C	Si	DO4
161	TPF30	3.0k*	3.3	25A				Si	M950am
162	TPH30	3.0k*	3.3	25A				Si	M950am
163	350R30B	3.0k	3.5	25	250		175	Si	
164	OSS9110-3	3.0k	3.5	35A	85	10m	175J	Si	
165	2ASPF30	3.0k*	4.0	25A			150A	Si	M950am
166	400R30B	3.0k	4.0	25	250		175	Si	
167	OSS9310-3	3.0k	4.0	30A	180	10m	175J	Si	
168	S2KW3C-1	3.0k	4.2	25A	300	8.3m	150	Si	M894Ø
169	450R30B	3.0k	4.5	25	250		175	Si	
170	500R30B	3.0k	5.0	25	250		175	Si	
171	OSS9210-3	3.0k	5.0	35A	360	10m	175J	Si	
172	SDA168L	3.0k	5.0	55C	150		125	†	M1159
173	1N3923	3.0k	5.0	100C	100	8.3m	200C	Si	DO4
174	550R30B	3.0k	5.5	25	250		175	Si	
175	2ATPF30	3.0k*	6.0	25A				Si	M950am
176	2ATPH30	3.0k*	6.0	25A				Si	M950am
177	600R30B	3.0k	6.0	25	250		175	Si	
178	SODSPC3	3.0k	6.0	25A	300	8.3m	175A	Si	M950n*
179	SODSPF30	3.0k*	6.0	25A				Si	M950am
180	6FXF11	3.0k	6.0	147C	150	10m	175J	Si	S339
181	SPS30	3.0k*	6.6	25A				Si	M950am
182	SODTPF30	3.0k*	9.0	25				Si	M950am
183	SODTPH30	3.0k*	9.0	25A				Si	M950am
184	OSS9410-3	3.0k	10	35A	800	10m	175J	Si	
185	1N3928	3.0k	10	100C	100	8.3m	200C	Si	DO4
186	2ASPS30	3.0k*	12	25A				Si	M950am
187	12FXF11	3.0k	12	140C	240	10m	175J	Si	S339
188	SODSPS30	3.0k*	18	25A				Si	M950am
189	15MA300	3.0k	25	121C	450	10m	150J	Si	S562
190	25FXF11	3.0k	25	140C	500	10m	175J	Si	S339a
191	SSF30	3.0k	100	55	5.0		175	Si	A83de
192	SSM30	3.0k	125	55	7.0		175	Si	A83de
193	H03DA	3.0k	300	90C	5.5k	10m	150J	Si	S517
194	300FXD13	3.0k	300	94C	6.5k	10m	150J	Si	S530
195	R620303000	3.0k	300	102C	5.5k	8.3m	150J	Si	C242
196	S962SXU30	3.0k	335	100C	5.6k§	10m	150J	Si	M759
197	SR400FH-60	3.0k	400	98C	10k§	8.3m	150J	Si△	S502a
198	SKN400/30	3.0k	400	100C	7.5k	10m	160J	Si	S510
199	FD600-30	3.0k	430	150J	5.5k	8.3m	190J	Si	M637a
200	S1109SXU30	3.0k	470	100C	9.2k§	10m	150J	Si	M759Ø
201	S1107SXU30	3.0k	570	100C	12k§	10m	150J	Si	M759Ø
202	SW30KBR595	3.0k	590	100H	10k	10m	160J	Si	S435j
203	AR912P30	3.0k	600	55H	5.6k§	10m	150J	Si△	M1005§%
204	AR912S30	3.0k	600	55H	5.6k§	10m	150J	Si△	M1005♦%
205	DS912SM30	3.0k	600	55C	5.6k§	10m	150J	Si△	M757
206	R720300600	3.0k	600	87C	7.0k	8.3m	150J	Si	C246f
207	FD500E60	3.0k	600	90C	10k§	8.3m	150J	Si△	C240d
208	1S2255	3.0k	600	93C	10k§	8.3m	150J	Si△	C240c
209	FD500DH60	3.0k	600	100C	11k§	8.3m	150J	Si△	M1344
210	SW30KBN635	3.0k	630	100H	13k§	10m	160J	Si	M747Ø
211	SW30KBR635	3.0k	630	100H	14k	10m	160J	Si	S435j
212	GD800-30	3.0k	640	150J	8.0k	8.3m	150J	Si	M637
213	A500LP	3.0k	740	100C	10k	8.3m	175	Si△	M463
214	A433CP	3.0k	750	85C	10k		175J	Si△	C245e
215	801F30H	3.0k	800	85	12k	20m	150J	Si	C241a
216	A442CP	3.0k	800	90C	14k		150J	Si△	C245e
217	C11DA	3.0k	800	95C	13k	10m	150J	Si	C242f
218	801PJA300	3.0k	800	113C	16k	10m	150J	Si	M1247
219	800FXD26	3.0k	800	150J	12k	10m	150J	Si	C249
220	DN761-30	3.0k	800	150J	12k	10m	150J	Si#	M1337

SYMBOLS AND CODES EXPLAINED IN INTERPRETER

11. RECTIFIERS, HIGH VOLTAGE - PIV ≥ 2 kV (Cont'd)

IN ORDER OF: (1) PIV (2) IO MAX (3) @ TEMP & (4) TYPE NUMBER

LINE No.	4 TYPE NUMBER	1 PIV (V)	MAX AVG FWD DC CURRENT 2 Io MAX (A)	3 @ TEMP (°C)	MAX RATING SURGE CURR PEAK 1 Cy (A)	PULSE WIDTH (s)	MAX. TEMP (°C)	MAT	DRAWING NO.
1	SKN870/30	3.0k	870	100C	105	10m	150J	Si	C246c
2	AR1109P30	3.0k	920	55H	9.2k§	10m	150J	SiΔ	M1005§%
3	AR1109S30	3.0k	920	55H	9.2k§	10m	150J	SiΔ	M1005♦%
4	DS1109SM30	3.0k	970	55C	9.2k§	10m	150J	SiΔ	M757
5	1003PJA300	3.0k	1.0k	108C	20k	10m	150J	Si	M1248
6	DS1107SM30	3.0k	1.1k	55C	12k§	10m	175S	SiΔ	C245b
7	1101PDK300	3.0k	1.1k	100C	18k§	8.3m	175J	SiΔ	C245a
8	AR1107P30	3.0k	1110	55H	12k§	10m	150J	SiΔ	M1005§%
9	AR1107S30	3.0k	1110	55H	12k§	10m	150J	SiΔ	M1005♦%
10	HD1500-30	3.0k	1.2k	150J	18k	8.3m	150J	Si	M637c
11	SKN1500/29	3.0k	1.27k	100C	16k	10m	175C	Si	C246h
12	DS2009SN30	3.0k	1.28k	55C	16k§		165S	SiΔ	M954
13	R9G0301300	3.0k	1.3k	190J	12k	8.3m	190J	Si	C246d
14	AR2009P30	3.0k	1400	55H	17k§	10m	150J	SiΔ	M1006§%
15	AR2009S30	3.0k	1400	55H	17k§	10m	150J	SiΔ	M1006♦%
16	A11DA	3.0k	1.6k	81C	26k	10m	150J	Si	M987
17	1600FXD24	3.0k	1.6k	150J	25k	10m	150J	Si	C249a
18	DS2007SN30	3.0k	1.7k	55C	20k		150J	Si	M954
19	JD2300-30	3.0k	1.7k	150J	35k	8.3m	150J	Si	M946
20	RA203020XX00	3.0k	2.0k		24k		150J	Si	C246n
21	AR3007P30	3.0k	2.2k	55H	27k§	10m	150J	SiΔ	M1006§%
22	AR3007S30	3.0k	2.2k	55H	27k§	10m	150J	SiΔ	M1006♦%
23	JD3000-30	3.0k	2.4k	150J	45k	8.3m	150J	Si	M946
24	D1800/3000	3.0k	2.5k	63C	34k	10m	150J	Si	C244b
25	DSP2500A30	3.0k	2.5k	81C	43k	10m	150J	Si	M1318
26	DS2106SU30	3.0k	2.62k	55H	50k	10m	150J	Si	M1207
27	SW30CXC13C	3.0k	3.6k	30H	30k	10m	160J	SiΔ	E200d
28	1N2902	3.1k	250m	25A			150S	Si	M122c
29	1N2903	3.1k	250m	25A			150S	Si	A83ax
30	S962SXU31	3.1k	335	100C	5.6k§	10m	150J	Si	M759
31	S1109SXU31	3.1k	470	100C	9.2k§	10m	150J	Si	M759Ø
32	S1107SXU31	3.1k	570	100C	12k§	10m	150J	Si	M759Ø
33	AR912P31	3.1k	600	55H	5.6k§	10m	150J	SiΔ	M1005§%
34	AR912S31	3.1k	600	55H	5.6k§	10m	150J	SiΔ	M1005♦%
35	DS912SM31	3.1k	600	55C	5.6k§	10m	150J	SiΔ	M757
36	A433CA	3.1k	750	85C	10k		175J	SiΔ	C245e
37	A442CA	3.1k	800	90C	14k		150J	SiΔ	C245e
38	AR1109P31	3.1k	920	55H	9.2k§	10m	150J	SiΔ	M1005§%
39	AR1109S31	3.1k	920	55H	9.2k§	10m	150J	SiΔ	M1005♦%
40	DS1109SM31	3.1k	970	55C	9.2k§	10m	150J	SiΔ	M757
41	DS1107SM31	3.1k	1.1k	55C	12k§	10m	175S	SiΔ	C245b
42	AR1107P31	3.1k	1110	55H	12k§	10m	150J	SiΔ	M1005§%
43	AR1107S31	3.1k	1110	55H	12k§	10m	150J	SiΔ	M1005♦%
44	DS2009SN31	3.1k	1.28k	55C	16k§		165S	SiΔ	M954
45	AR2009P31	3.1k	1400	55H	17k§	10m	150J	SiΔ	M1006§%
46	AR2009S31	3.1k	1400	55H	17k§	10m	150J	SiΔ	M1006♦%
47	DS2007SN31	3.1k	1.7k	55C	20k		150J	Si	M954
48	DS2106SU31	3.1k	2.62k	55H	50k	10m	150J	Si	M1207
49	HV32A	3.2k	.05	50A	17 §	10m	175A	Si	A3t
50	MV32A	3.2k	.05	50A	16 §	10m	175A	Si	A3h
51	10R32B	3.2k	.10	25	60		175	Si	
52	HV32B	3.2k	.15	50A	17 §	10m	175A	Si	A3t
53	MV32B	3.2k	.15	50A	16 §	10m	175A	Si	A3h
54	HV32C	3.2k	.30	50A	17 §	10m	175A	Si	A3t
55	MV32C	3.2k	.30	50A	16 §	10m	175A	Si	A3h
56	75R32B	3.2k	.75	25	60		175	Si	
57	100R32B	3.2k	1.0	25	60		175	Si	
58	1N2666	3.2k	1.5	25A	15	8.3m	165A	Si	M126e
59	150R32B	3.2k	1.5	25	60		175	Si	
60	200R32B	3.2k	2.0	25	60		175	Si	
61	P32H	3.2k	2.0	55A	230	10m	125A	SiΔ	M267
62	250R32B	3.2k	2.5	25	250		175	Si	
63	300R32B	3.2k	3.0	25	250		175	Si	
64	350R32B	3.2k	3.5	25	250		175	Si	
65	400R32B	3.2k	4.0	25	250		175	Si	
66	450R32B	3.2k	4.5	25	250		175	Si	
67	500R32B	3.2k	5.0	25	250		175	Si	
68	550R32B	3.2k	5.5	25	250		175	Si	
69	600R32B	3.2k	6.0	25	250		175	Si	
70	UGE0501NY4B	3.2k	6.4	45A	1.1k	10m	150J	Si	
71	UGE0421AY4	3.2k	22	45A	250	10m		Si	M1076
72	D150/3200B	3.2k	225	60C	3.3k	10m	150J	Si	S499
73	D150R3200B	3.2k	225	60C	3.3k	10m	150J	Si	S499Ø
74▼	D269/3200	3.2k	270	100C	3.8k§	10m	150J	Si	M1346C
75	R7003203	3.2k	300	79	7.0k		190	Si	S426Ø
76	S962SXU32	3.2k	335	100C	5.6k§	10m	150J	Si	M759
77	DSA401-32GE	3.2k	360	89C	8.3k	10m	150J	Si	M1215
78	DSA401-32LE	3.2k	360	89C	8.3k	10m	150J	Si	M1215
79	DSA503-32GE	3.2k	450	110C	12k	10m	150J	Si	M1215
80	DSA503-32L1E	3.2k	450	110C	12k	10m	150J	Si	M1215
81	S1109SXU32	3.2k	470	100C	9.2k§	10m	150J	Si	M759Ø
82	S1107SXU32	3.2k	570	100C	12k§	10m	150J	Si	M759Ø
83	SW32KBN595	3.2k	590	100H	10k§	10m	160J	Si	M747Ø
84	SW32KBR595	3.2k	590	100H	10k	10m	160J	Si	S435j
85	AR912P32	3.2k	600	55H	5.6k§	10m	150J	SiΔ	M1005§%
86	AR912S32	3.2k	600	55H	5.6k§	10m	150J	SiΔ	M1005♦%
87	DS912SM32	3.2k	600	55C	5.6k§	10m	150J	SiΔ	M757
88	SSiP32175	3.2k	620	105	10k	10m	160	Si	S12a#
89	A433CB	3.2k	750	85C	10k		175J	SiΔ	C245e
90	A442CB	3.2k	800	90C	14k		150J	SiΔ	C245e
91	DN761-32	3.2k	800	150J	12k	10m	150J	Si#	M1337
92	AR1109P32	3.2k	920	55H	9.2k§	10m	150J	SiΔ	M1005§%
93	AR1109S32	3.2k	920	55H	9.2k§	10m	150J	SiΔ	M1005♦%
94	DSA605-32AE	3.2k	955	50C	12k	10m	150J	Si	M953
95	DS1109SM32	3.2k	970	55C	9.2k§	10m	150J	SiΔ	M757
96	SSiP62150	3.2k	1.07k	92	8.8k		160J	Si	C246k
97	SSiP62175	3.2k	1.07k	92C	10k	10m	160J	SiΔ	C246k
98	DS1107SM32	3.2k	1.1k	55C	12k§	10m	175S	SiΔ	C245b
99	AR1107P32	3.2k	1110	55H	12k§	10m	150J	SiΔ	M1005§%
100	AR1107S32	3.2k	1110	55H	12k§	10m	150J	SiΔ	M1005♦%
101	DSA1208-32AE	3.2k	1240	100	23k	8.3m	150	Si	M246l
102	DS2009SN32	3.2k	1.28k	55C	16k§		165S	SiΔ	M954
103	AR2009P32	3.2k	1400	55H	17k§	10m	150J	SiΔ	M1006§%
104	AR2009S32	3.2k	1400	55H	17k§	10m	150J	SiΔ	M1006♦%
105	DS2007SN32	3.2k	1.7k	55C	20k		150J	Si	M954
106	JD2300-32	3.2k	1.7k	150J	35k	8.3m	150J	Si	M946
107▼	D1800N3200	3.2k	1.8k	100C	31k§	10m	160J	Si	M1146a
108▼	D1809N3200	3.2k	1.8k	100C	31k§	10m	160J	Si	M1346d
109	RA203220XX00	3.2k	2.0k		24k		150J	Si	C246n
110	SSiR62175	3.2k	2.0k		31k	10m	160J	Si	S561b
111	RA203225XX00	3.2k	2.5k		28k		150J	Si	C246n
112	D1800N3200T	3.2k	2.5k	63C	30k	10m	150J	Si	C244b
113	DS2106SU32	3.2k	2.62k	55H	50k	10m	150J	Si	M1207
114	SW32CXC13C	3.2k	3.6k	30H	30k	10m	160J	SiΔ	E200d
115	S962SXU33	3.3k	335	100C	5.6k§	10m	150J	Si	M759
116	S1109SXU33	3.3k	470	100C	9.2k§	10m	150J	Si	M759Ø
117	S1107SXU33	3.3k	570	100C	12k§	10m	150J	Si	M759Ø
118	AR912P33	3.3k	600	55H	5.6k§	10m	150J	SiΔ	M1005§%
119	AR912S33	3.3k	600	55H	5.6k§	10m	150J	SiΔ	M1005♦%
120	DS912SM33	3.3k	600	55C	5.6k§	10m	150J	SiΔ	M757
121	AR1109P33	3.3k	920	55H	9.2k§	10m	150J	SiΔ	M1005§%
122	AR1109S33	3.3k	920	55H	9.2k§	10m	150J	SiΔ	M1005♦%
123	DS1109SM33	3.3k	970	55C	9.2k§	10m	150J	SiΔ	M757
124	DS1107SM33	3.3k	1.1k	55C	12k§	10m	175S	SiΔ	C245b
125	AR1107P33	3.3k	1110	55H	12k§	10m	150J	SiΔ	M1005§%
126	AR1107S33	3.3k	1110	55H	12k§	10m	150J	SiΔ	M1005♦%
127	DS2009SN33	3.3k	1.28k	55C	16k§		165S	SiΔ	M954
128	AR2009P33	3.3k	1400	55H	17k§	10m	150J	SiΔ	M1006§%
129	AR2009S33	3.3k	1400	55H	17k§	10m	150J	SiΔ	M1006♦%
130	DS2007SN33	3.3k	1.7k	55C	20k		150J	Si	M954
131♦	DS2106SU33	3.3k	4.0k	55	36k	10m	150J	SiΔ	M1207
132	10R34B	3.4k	.10	25	60		175	Si	
133	75R34B	3.4k	.75	25	60		175	Si	
134	100R34B	3.4k	1.0	25	60		175	Si	
135	150R34B	3.4k	1.5	25	60		175	Si	
136	200R34B	3.4k	2.0	25	60		175	Si	
137	250R34B	3.4k	2.5	25	250		175	Si	
138	300R34B	3.4k	3.0	25	250		175	Si	
139	350R34B	3.4k	3.5	25	250		175	Si	
140	400R34B	3.4k	4.0	25	250		175	Si	
141	450R34B	3.4k	4.5	25	250		175	Si	
142	500R34B	3.4k	5.0	25	250		175	Si	
143	550R34B	3.4k	5.5	25	250		175	Si	
144	600R34B	3.4k	6.0	25	250		175	Si	
145	R7003403	3.4k	300	79	7.0k		190	Si	S426Ø
146	S962SXU34	3.4k	335	100C	5.6k§	10m	150J	Si	M759
147	S1109SXU34	3.4k	470	100C	9.2k§	10m	150J	Si	M759Ø
148	S1107SXU34	3.4k	570	100C	12k§	10m	150J	Si	M759Ø
149	SW34KBN595	3.4k	590	100H	10k§	10m	160J	Si	M747Ø
150	SW34KBR595	3.4k	590	100H	10k	10m	160J	Si	S435j
151	AR912P34	3.4k	600	55H	5.6k§	10m	150J	SiΔ	M1005§%
152	AR912S34	3.4k	600	55H	5.6k§	10m	150J	SiΔ	M1005♦%
153	DS912SM34	3.4k	600	55C	5.6k§	10m	150J	SiΔ	M757
154	DN761-34	3.4k	800	150J	12k	10m	150J	Si#	M1337
155	AR1109P34	3.4k	920	55H	9.2k§	10m	150J	SiΔ	M1005§%
156	AR1109S34	3.4k	920	55H	9.2k§	10m	150J	SiΔ	M1005♦%
157	DS1109SM34	3.4k	970	55C	9.2k§	10m	150J	SiΔ	M757
158	DS1107SM34	3.4k	1.1k	55C	12k§	10m	175S	SiΔ	C245b
159	AR1107P34	3.4k	1110	55H	12k§	10m	150J	SiΔ	M1005§%
160	AR1107S34	3.4k	1110	55H	12k§	10m	150J	SiΔ	M1005♦%
161	DS2009SN34	3.4k	1.28k	55C	16k§		165S	SiΔ	M954
162	AR2009P34	3.4k	1400	55H	17k§	10m	150J	SiΔ	M1006§%
163	AR2009S34	3.4k	1400	55H	17k§	10m	150J	SiΔ	M1006♦%
164	DS2007SN34	3.4k	1.7k	55C	20k		150J	Si	M954
165	JD2300-34	3.4k	1.7k	150J	35k	8.3m	150J	Si	M946
166	RA203420XX00	3.4k	2.0k		24k		150J	Si	C246n
167	RA203425XX00	3.4k	2.5k		28k		150J	Si	C246n
168	SW34CXC13C	3.4k	3.6k	30H	30k	10m	160J	SiΔ	E200d
169♦	DS2106SU34	3.4k	4.0k	55	36k	10m	150J	SiΔ	M1207
170	2L35	3.5k	.02	25	10	8.3m	175	Si	A1ke
171	VA35	3.5k	25m	40A	3.0	8.3m	150A	SiΔ	A1m
172	DD35	3.5k	30m	25A	4.0	8.3	100A	Si	A109b
173	5L35	3.5k	.05	25	10	8.3m	175	Si	A1ke
174	10L35	3.5k	.10	25	20	8.3m	175	Si	A1ke
175	B427-35	3.5k	100m	55	4.0		150	SiΔ	A50f
176	B587-35	3.5k	100m	55	4.0			SiΔ	A69r
177	15L35	3.5k	.15	25	20	8.3m	175	Si	A1ke
178	20L35	3.5k	.20	25	20	8.3m	175	Si	A1kp
179	1N2904	3.5k	250m	25A			150S	Si	M122b
180	1N2905	3.5k	250m	25A			150S	Si	A83ak
181	1N2906	3.5k	250m	25A			150S	Si	M122c
182	1N2907	3.5k	250m	25A			150S	Si	A83ax
183	25L35	3.5k	.25	25	20	8.3m	175	Si	A1ke
184	EH350	3.5k	250m	50A	25	8.0m	150A	Si	A3aa
185	250S35	3.5k	250m	55	25	8.3m	150A	Si	A1tp
186	250RS35	3.5k	250m	85	25		150A	SiΔ	A1tpØ
187	30L35	3.5k	.30	25	40	8.3m	175	Si	A1ke
188	40L35	3.5k	.40	25	40	8.3m	175	Si	A1ke
189	US35	3.5k	400m	25A	20	8.3m	150	Si	A1aai
190	50L35	3.5k	.50	25	40	8.3m	175	Si	A1ke
191	B588-35	3.5k	500m	55	25			SiΔ	A69s
192	BA223-35	3.5k	500m	55	25			SiΔ	A1rx
193	60L35	3.5k	.60	25	40	8.3m	175	Si	A1ke
194	PS2352	3.5k	.60	25A			175A	Si	M22
195	80L35	3.5k	.80	25	60	8.3m	175	Si	A1ke
196	100L35	3.5k	1.0	25	60	8.3m	175	Si	A1ke
197	S962SXU35	3.5k	335	100C	5.6k§	10m	150J	Si	M759
198	SR400FV-70	3.5k	400	91C	8.0k§	8.3m	150J	SiΔ	S502a
199	S1109SXU35	3.5k	470	100C	9.2k§	10m	150J	Si	M759Ø
200	FD500EV70	3.5k	500	96C	8.0k§	8.3m	150J	SiΔ	C240d
201	FD500DV70	3.5k	500	106C	8.0k	8.3m	150J	SiΔ	M1344
202	S1107SXU35	3.5k	570	100C	12k§	10m	150J	Si	M759Ø
203	AR912P35	3.5k	600	55H	5.6k§	10m	150J	SiΔ	M1005§%
204	AR912S35	3.5k	600	55H	5.6k§	10m	150J	SiΔ	M1005♦%
205	DS912SM35	3.5k	600	55C	5.6k§	10m	150J	SiΔ	M757
206	AR1109P35	3.5k	920	55H	9.2k§	10m	150J	SiΔ	M1005§%
207	AR1109S35	3.5k	920	55H	9.2k§	10m	150J	SiΔ	M1005♦%
208	DS1109SM35	3.5k	970	55C	9.2k§	10m	150J	SiΔ	M757
209	DS1107SM35	3.5k	1.1k	55C	12k§	10m	175S	SiΔ	C245b
210	AR1107P35	3.5k	1110	55H	12k§	10m	150J	SiΔ	M1005§%
211	AR1107S35	3.5k	1110	55H	12k§	10m	150J	SiΔ	M1005♦%
212	DS2009SN35	3.5k	1.28k	55C	16k§		165S	SiΔ	M954
213	AR2009P35	3.5k	1400	55H	17k§	10m	150J	SiΔ	M1006§%
214	AR2009S35	3.5k	1400	55H	17k§	10m	150J	SiΔ	M1006♦%
215	FD1600CU-70	3.5k	1.6k	108H	32k§	8.3m	150J	SiΔ	M1235
216	FD1600CV70	3.5k	1.6k	108C	3.2k§	8.3m	150J	SiΔ	M1235
217	DS2007SN35	3.5k	1.7k	55C	20k		150J	Si	M954
218	DS2106SU35	3.5k	4.0k	55H	36k	10m	150J	SiΔ	M1207
219	HV36A	3.6k	.05	50A	17 §	10m	175A	Si	A3t
220	MV36A	3.6k	.05	50A	16 §	10m	175A	Si	A3h

SYMBOLS AND CODES EXPLAINED IN INTERPRETER

11. RECTIFIERS, HIGH VOLTAGE - PIV ≥ 2 kV (Cont'd)

IN ORDER OF: (1) PIV (2) IO MAX (3) @ TEMP & (4) TYPE NUMBER

LINE No.	4 TYPE NUMBER	1 PIV (V)	MAX AVG FWD DC CURRENT 2 Io MAX (A)	3 @ TEMP (°C)	MAX RATING SURGE CURR PEAK 1 Cy (A)	PULSE WIDTH (s)	MAX. TEMP (°C)	MAT	DRAWING NO.
1	1N1139	3.6k	.065	75	3.5	5.0m	170	Si	F57f
2	1N1140	3.6k	.065	75	3.5	5.0m	170	Si	F57d
3	10R36B	3.6k	.10	25	60		175	Si	
4	HV36B	3.6k	.15	50A	17 §	10m	175A	Si	A3t
5	MV36B	3.6k	.15	50A	16 §	10m	175A	Si	A3h
6	673-9	3.6k	0.2	25A	15	8.3	150	Si	M1166c♦
7	67D036H55FNN	3.6k	250m	50A	35		150A	Si	F12aj
8	HV36C	3.6k	.25	50A	17 §	10m	175A	Si	A3t
9	MV36C	3.6k	.25	50A	16 §	10m	175A	Si	A3h
10	SLD3.6T	3.6k	250m	50A	30	8.0m	150A	Si	F57e
11	SLD3.6TS	3.6k	250m	50A	30	8.0m	150A	Si	F57f
12	1N1752	3.6k	.36	75C	6.0		150	Si	F12s
13	1N1751	3.6k	.37	75C	6.0		150	Si	F12t
14	75R36B	3.6k	.75	25	60		175	Si	
15	100R36B	3.6k	1.0	25	60		175	Si	
16	150R36B	3.6k	1.5	25	60		175	Si	
17	200R36B	3.6k	2.0	25	60		175	Si	
18	250R36B	3.6k	2.5	25	250		175	Si	
19	300R36B	3.6k	3.0	25	250		175	Si	
20	1N4540	3.6k*	3.0	100C	15 §	8.3m	175C	Si	DO4
21	350R36B	3.6k	3.5	25	250		175	Si	
22	400R36B	3.6k	4.0	25	250		175	Si	
23	450R36B	3.6k	4.5	25	250		175	Si	
24	500R36B	3.6k	5.0	25	250		175	Si	
25	550R36B	3.6k	5.5	25	250		175	Si	
26	600R36B	3.6k	6.0	25	250		175	Si	
27	D150/3600B	3.6k	225	60C	3.3k	10m	150J	Si	S499
28	D150R3600B	3.6k	225	60C	3.3k	10m	150J	Si	S499⊘
29▼	D269/3600	3.6k	270	100C	3.8k§	10m	150J	Si	M1346C
30	R7003603	3.6k	300	79	7.0k		190	Si	S426⊘
31	S962SXU36	3.6k	335	100C	5.6k§	10m	150J	Si	M759
32	S1109SXU36	3.6k	470	100C	9.2k§	10m	150J	Si	M759⊘
33	S1107SXU36	3.6k	570	100C	12k§	10m	150J	Si	M759⊘
34	SW36KBN595	3.6k	590	100H	10k§	10m	160J	Si	M747⊘
35	SW36KBR595	3.6k	590	100H	10k	10m	160J	Si	S435j
36	AR912P36	3.6k	600	55H	5.6k§	10m	150J	Si△	M1005§%
37	AR912S36	3.6k	600	55H	5.6k§	10m	150J	Si△	M1005♦%
38	DS912SM36	3.6k	600	55C	5.6k§	10m	150J	Si△	M757
39	D401N3600E	3.6k	605	58C	10k	10m	150J	Si	M879
40	D401R3600E	3.6k	605	58C	10k	10m	150J	Si	M879⊘
41	SSiP32200	3.6k	620	105	10k	10m	160	Si	S12a#
42▼	D629/3600	3.6k	630	120C	12k§	10m	150J	Si	M1346C
43	AR1109P36	3.6k	920	55H	9.2k§	10m	150J	Si△	M1005§%
44	AR1109S36	3.6k	920	55H	9.2k§	10m	150J	Si△	M1005♦%
45	DS1109SM36	3.6k	970	55C	9.2k§	10m	150J	Si△	M757
46	SSiP62200	3.6k	1.07k	92C	10k	10m	160J	Si△	C246k
47	DS1107SM36	3.6k	1.1k	55C	12k§	10m	175S	Si△	C245b
48	AR1107P36	3.6k	1110	55H	12k§	10m	150J	Si△	M1005§%
49	AR1107S36	3.6k	1110	55H	12k§	10m	150J	Si△	M1005♦%
50	DS2009SN36	3.6k	1.28k	55C	16k§		165S	Si△	M954
51	AR2009P36	3.6k	1400	55H	17k§	10m	150J	Si△	M1006§%
52	AR2009S36	3.6k	1400	55H	17k§	10m	150J	Si△	M1006♦%
53	DS2007SN36	3.6k	1.7k	55C	20k		150J	Si	M954
54	JD2300-36	3.6k	1.7k	150J	35k	8.3m	150J	Si	M946
55▼	D1800N3600	3.6k	1.8k	100C	31k§	10m	160J	Si	M1146a
56▼	D1809N3600	3.6k	1.8k	100C	31k§	10m	160J	Si	M1346d
57	RA203620XX00	3.6k	2.0k		24k		150J	Si	C246n
58	SSiR62200	3.6k	2.0k		31k	10m	160J	Si	S561b
59	SW36CXC13C	3.6k	3.6k	30H	30k	10m	160J	Si△	E200d
60♦	DS2106SU36	3.6k	4.0k	55	36k	10m	150J	Si△	M1207
61	S962SXU37	3.7k	335	100C	5.6k§	10m	150J	Si	M759
62	S1109SXU37	3.7k	470	100C	9.2k§	10m	150J	Si	M759⊘
63	AR912P37	3.7k	600	55H	5.6k§	10m	150J	Si△	M1005§%
64	AR912S37	3.7k	600	55H	5.6k§	10m	150J	Si△	M1005♦%
65	DS912SM37	3.7k	600	55C	5.6k§	10m	150J	Si△	M757
66	AR1109P37	3.7k	920	55H	9.2k§	10m	150J	Si△	M1005§%
67	AR1109S37	3.7k	920	55H	9.2k§	10m	150J	Si△	M1005♦%
68	DS1109SM37	3.7k	970	55C	9.2k§	10m	150J	Si△	M757
69	DS2009SN37	3.7k	1.28k	55C	16k§		165S	Si△	M954
70	AR2009P37	3.7k	1400	55H	17k§	10m	150J	Si△	M1006§%
71	AR2009S37	3.7k	1400	55H	17k§	10m	150J	Si△	M1006♦%
72	DS2007SN37	3.7k	1.7k	55C	20k		150J	Si	M954
73	10R38B	3.8k	.10	25	60		175	Si	
74	1N2908	3.8k	250m	25A			150S	Si	M122d
75	1N2909	3.8k	250m	25A			150S	Si	A83bd
76	75R38B	3.8k	.75	25	60		175	Si	
77	100R38B	3.8k	1.0	25	60		175	Si	
78	150R38B	3.8k	1.5	25	60		175	Si	
79	200R38B	3.8k	2.0	25	60		175	Si	
80	250R38B	3.8k	2.5	25	250		175	Si	
81	300R38B	3.8k	3.0	25	250		175	Si	
82	350R38B	3.8k	3.5	25	250		175	Si	
83	400R38B	3.8k	4.0	25	250		175	Si	
84	450R38B	3.8k	4.5	25	250		175	Si	
85	500R38B	3.8k	5.0	25	250		175	Si	
86	550R38B	3.8k	5.5	25	250		175	Si	
87	600R38B	3.8k	6.0	25	250		175	Si	
88	R7003803	3.8k	300	79	7.0k		190	Si	S426⊘
89	S962SXU38	3.8k	335	100C	5.6k§	10m	150J	Si	M759
90	DSA401-38GG	3.8k	360	62C	6.2k	10m	150J	Si	M1215
91	DSA401-38LG	3.8k	360	62C	6.2k	10m	150J	Si	M1215
92	DSA403-38GG	3.8k	450	90C	9.3k	10m	150J	Si	M1215
93	DSA403-38L1G	3.8k	450	90C	9.3k	10m	150J	Si	M1215
94	S1109SXU38	3.8k	470	100C	9.2k§	10m	150J	Si	M759⊘
95	SW38KBN515	3.8k	510	100H	9.2k§	10m	160J	Si	M747⊘
96	SW38KBR515	3.8k	510	100H	9.2k	10m	160J	Si	S435j
97	AR912P38	3.8k	600	55H	5.6k§	10m	150J	Si△	M1005§%
98	AR912S38	3.8k	600	55H	5.6k§	10m	150J	Si△	M1005♦%
99	DS912SM38	3.8k	600	55C	5.6k§	10m	150J	Si△	M757
100	DSA405-38AG	3.8k	700	50C	9.3k	10m	150J	Si	M953
101	AR1109P38	3.8k	920	55H	9.2k§	10m	150J	Si△	M1005§%
102	AR1109S38	3.8k	920	55H	9.2k§	10m	150J	Si△	M1005♦%
103	DSA908-38AG	3.8k	940	100	18k	8.3m	150	Si	M246l
104	DS1109SM38	3.8k	970	55C	9.2k§	10m	150J	Si△	M757
105	DS2009SN38	3.8k	1.28k	55C	16k§		165S	Si△	M954
106	AR2009P38	3.8k	1400	55H	17k§	10m	150J	Si△	M1006§%
107	AR2009S38	3.8k	1400	55H	17k§	10m	150J	Si△	M1006♦%
108	DS2007SN38	3.8k	1.7k	55C	20k		150J	Si	M954
109	JD2300-38	3.8k	1.7k	150J	35k	8.3m	150J	Si	M946
110	RA203820XX00	3.8k	2.0k		24k		150J	Si	C246n
111	S962SXU39	3.9k	335	100C	5.6k§	10m	150J	Si	M759
112	S1109SXU39	3.9k	470	100C	9.2k§	10m	150J	Si	M759⊘
113	AR912P39	3.9k	600	55H	5.6k§	10m	150J	Si△	M1005§%
114	AR912S39	3.9k	600	55H	5.6k§	10m	150J	Si△	M1005♦%
115	DS912SM39	3.9k	600	55C	5.6k§	10m	150J	Si△	M757
116	AR1109P39	3.9k	920	55H	9.2k§	10m	150J	Si△	M1005§%
117	AR1109S39	3.9k	920	55H	9.2k§	10m	150J	Si△	M1005♦%
118	DS1109SM39	3.9k	970	55C	9.2k§	10m	150J	Si△	M757
119	DS2009SN39	3.9k	1.28k	55C	16k§		165S	Si△	M954
120	AR2009P39	3.9k	1400	55H	17k§	10m	150J	Si△	M1006§%
121	AR2009S39	3.9k	1400	55H	17k§	10m	150J	Si△	M1006♦%
122	DS2007SN39	3.9k	1.7k	55C	20k		150J	Si	M954
123	HV-04-5	4.0k	2.0m	100C	500m	10m	110J	Si△	A408
124	ESJA25-04	4.0k	5.0m		500m		100C	Si	A428
125	CRG40	4.0k	10m		20	1.0m	125	Si	DO7
126	MC162	4.0k	.01	25	1.0	8.0m		Si	A1db
127♦	HS3#B	4k	10m	45A	1.5 §	10m	110J	Si	A298ad
128	10S40	4.0k	10m	55	1.0	8.3m	150A	Si	A1df
129	2L40	4.0k	.02	25	10	8.3m	175	Si	A1ke
130	MC161	4.0k	.02	25	2.0	8.0m		Si	A1db
131	DD40	4.0k	30m	25A	4.0	8.3	100A	Si	A109b
132	MC160	4.0k	.04	25	3.0	8.0m		Si	A1db
133	MC1041	4.0k	.04	25				Si	A1cv
134	MC1041A	4.0k	.04	25				Si	A1cv
135	MC1042	4.0k	.04	25				Si	A1gr
136	MC1042A	4.0k	.04	25				Si	A1gr
137	M40F	4.0k	40m	55A	4.0		150A	Si	A1abd
138	M40S	4.0k	40m	55A	4.0		150A	Si	A1abd
139	M40UF	4.0k	40m	55A	4.0		150A	Si	A1abd
140	MHVG40	4.0k	50m		20	1.0m	125	Si	A249e
141	5L40	4.0k	.05	25	10	8.3m	175	Si	A1ke
142	MC041	4.0k	.05	25A			150A	Si	M54a
143	MC041A	4.0k	.05	25A			150A	Si	M54a
144	MC042	4.0k	.05	25A			150A	Si	M54d
145	MC042A	4.0k	.05	25A			150A	Si	M54d
146	PS2424	4.0k	.05	25A				Si	A1qb
147	VB40	4.0k	50m	40A	3.0	8.3m	150A	Si△	A298m
148	VG4	4.0k	50m	40A	3.0	8.3m	150A	Si△	A298j
149	HV40A	4.0k	.05	50A	17 §	10m	175A	Si	A3t
150	LK4	4.0k	50m	50A	2.0	8.0m	150A	Si	A3aa
151	MV40A	4.0k	.05	50A	16 §	10m	175A	Si	A3h
152	50S40	4.0k	50m	55	2.0	8.3m	150A	Si	A1df
153	1N2379	4.0k	.05	100A	12	8.3m	150A	Si	A1hu
154	HV40E	4.0k	50m	100A			150A	Si	A1xe
155	HV40K	4.0k	50m	100A			150A	Si	A1fe
156	HV40M	4.0k	50m	100A			150A	Si	A1xd
157	HV40P	4.0k	50m	100A			150A	Si	A94q
158	MC5604	4.0k	60m	100	4.0			Si	A60w
159	10L40	4.0k	.10	25	20	8.3m	175	Si	A1ke
160	10R40B	4.0k	.10	25	60		175	Si	
161	HS40	4.0k	100m	50	4.0	8.3m	175	Si	A298ad
162	B427-40	4.0k	100m	55	4.0		150	Si△	A50f
163	B587-40	4.0k	100m	55	4.0			Si△	A69r
164	1N2382	4.0k	.15	25A	6.0	8.0m	150A	Si	A1jh
165	15L40	4.0k	.15	25	20	8.3m	175	Si	A1ke
166	PS1144	4.0k	.15	25A	2.5 §	8.0m	175A	Si	A1jg
167	HV40B	4.0k	.15	50A	17 §	10m	175A	Si	A3t
168	MV40B	4.0k	.15	50A	16 §	10m	175A	Si	A3h
169	20L40	4.0k	.20	25	20	8.3m	175	Si	A1ke
170	SLD4VS	4.0k	200m	50A	30	8.0m	150A	Si	Algd
171	200S40	4.0k	200m	55	20	8.3m	150A	Si	A1tp
172	HVC400	4.0k	.20	55A	6.0		150	Si	M291c
173	HVG-4	4.0k	200m	55A	15		150A	Si	A313e
174	1N2910	4.0k	250m	25A			150S	Si	M122c
175	1N2911	4.0k	250m	25A			150S	Si	A83ax
176	25L40	4.0k	.25	25	20	8.3m	175	Si	A1ke
177	M40K	4.0k	250m	25A	2.0	10m	150A	Si△	A83k
178	NTD04	4.0k	.25	25A	10		125A	Si△	A1gf
179	EH400	4.0k	250m	50A	25	8.0m	150A	Si	A3aa
180	HV40	4.0k	250m	50A	20	8.3m	125A	Si*	A1ty
181	HV40C	4.0k	.25	50A	17 §	10m	175A	Si	A3t
182	MV40C	4.0k	.25	50A	16 §	10m	175A	Si	A3h
183	SLD4V	4.0k	250m	50A	30	8.0m	150A	Si	Alkh
184	250S40	4.0k	250m	55	25	8.3m	150A	Si	A1tp
185	BH400	4.0k	250m	75A	20	8.3m	150A	Si	DO27
186	GI250-4	4.0k	250m	75A	15		175	Si	E204p
187	250RS40	4.0k	250m	85	25		150A	Si△	A1tpØ
188	30L40	4.0k	.30	25	40	8.3m	175	Si	A1ke
189	1N2382A	4.0k	.35	25A	9.0	8.0m	200A	Si	A1gd
190	PS1851	4.0k	.35	25			200A	Si	A1jg
191	US40	4.0k	350m	25A	20	8.3m	150	Si	A1aai
192	40L40	4.0k	.40	25	40	8.3m	175	Si	A1ke
193	B223-40	4.0k	.40	25	60		175A	Si	A1rx
194	PS1444	4.0k	.40	25A			175A	Si	F13b
195	SLDHV4	4.0k	.40	25A	22		175A	Si	M239c
196	HV840	4.0k	400m	50	50	8.0m	175S	Si	M212j
197	B588-40	4.0k	400m	55	25			Si△	A69s
198	BA223-40	4.0k	400m	55	25			Si△	A1rx
199	1RM40	4.0k	500m	25A	12	10m	150J	Si	M62g
200	50L40	4.0k	.50	25	40	8.3m	175	Si	A1ke
201	D40H	4.0k	.50	25A	30	10m	100A	Si△	M62
202	425SH8AB1	4.0k	500m	50A	50		150A	Si	A69au
203	HVC40	4.0k	500m	50A	60	8.3m	125A	Si*	A1ey
204	60L40	4.0k	.60	25	40	8.3m	175	Si	A1ke
205	PS2353	4.0k	.60	25A			175A	Si	M22
206	SX40	4.0k	600m	50	40	8.3m	150	Si	A344b
207	SXS40	4.0k	600m	50	40	8.3m	150	Si	A344b
208	S4000HE	4.0k	0.6	55A	20		150	Si	M1311
209	75R40B	4.0k	.75	25	60		175	Si	
210	Z40UF	4.0k	750m	55A	40		150A	Si	A1abc
211	80L40	4.0k	.80	25	60	8.3m	175	Si	A1ke
212	SPCHV4	4.0k	800m	25A	23	8.3m	175A	Si	M950b*
213	SPFHV40	4.0k*	800m	25A			150A	Si	M950an
214	Z40F	4.0k	800m	55A	40		150A	Si	A1abc
215	Z40S	4.0k	1.0		40		150A	Si	A1abc
216	100L40	4.0k	1.0	25	60	8.3m	175	Si	A1ke
217	100R40B	4.0k	1.0	25	60		175	Si	
218	F40H	4.0k	1.0	25A	70	10m	100A	Si△	M62
219	SM40	4.0k	1.0	55	4.0	8.0m	175A	Si	A344d
220	SLD4	4.0k	1.1	30A	50		125A	Si△	M239c

SYMBOLS AND CODES EXPLAINED IN INTERPRETER

11. RECTIFIERS, HIGH VOLTAGE - PIV ≥ 2 kV (Cont'd)

IN ORDER OF: (1) PIV (2) IO MAX (3) @ TEMP & (4) TYPE NUMBER

LINE No.	4 TYPE NUMBER	1 PIV (V)	MAX AVG FWD DC CURRENT 2 Io MAX (A)	3 @ TEMP (°C)	MAX RATING SURGE CURR PEAK 1 Cy (A)	PULSE WIDTH (s)	MAX. TEMP (°C)	MAT	DRAWING NO.
1	TPFHV40	4.0k*	1.2	25A				Si	M950an
2	TPHHV40	4.0k*	1.2	25A				Si	M950an
3	1N2667	4.0k	1.5	25A	15	8.3m	165A	Si	M126g
4	150R40B	4.0k	1.5	25	60		175	Si	
5	SC40	4.0k	2.0		50			Si	M462
6	SC40F	4.0k	2.0		35			Si	M462
7	2ASLD4	4.0k	2.0	25A	200		175A	Si	M239c
8	2ASPC4	4.0k	2.0	25A	200	8.3m	100	Si	M950b*
9	6RM40	4.0k	2.0	25A	150	10m	150J	Si	M62e
10	200R40B	4.0k	2.0	25	60		175	Si	
11	VC40	4.0k	2.0	40C	50	8.3m	125A	Si△	M430
12	P40H	4.0k	2.0	55A	230	10m	125A	Si△	M267
13	SPC4	4.0k	2.2	25A	50	8.3m	175A	Si	M950b*
14	SPF40	4.0k*	2.2	25A			150A	Si	M950an
15	KX40	4.0k	2.2	50	150	8.3m	150	Si	A344a
16	KXS40	4.0k	2.2	50	150	8.3m	150	Si	A344a
17	KXS50	4.0k	2.2	50	150	8.3m	150	Si	A344a
18	SPSHV40	4.0k*	2.4	25A				Si	M950an
19	250R40B	4.0k	2.5	25	250		175	Si	
20	300R40B	4.0k	3.0	25	250		175	Si	
21	KHP4	4.0k	3.0	25A	300		175A	Si△	M239v
22	SODSLD4	4.0k	3.0	30A	290		140A	Si△	M239v
23	TPF40	4.0k*	3.3	25A				Si	M950an
24	TPH40	4.0k*	3.3	25A				Si	M950an
25	350R40B	4.0k	3.5	25	250		175	Si	
26	2ASPF40	4.0k*	4.0	25A			150A	Si	M950an
27	400R40B	4.0k	4.0	25	250		175	Si	
28	S2KW4C1	4.0k	4.0	55A	500		175J	Si	M894
29	450R40B	4.0k	4.5	25	250		175	Si	
30	500R40B	4.0k	5.0	25	250		175	Si	
31	SDA168M	4.0k	5.0	55C	150		125	†	M1159
32	550R40B	4.0k	5.5	25	250		175	Si	
33	2ATPF40	4.0k*	6.0	25A				Si	M950an
34	2ATPH40	4.0k*	6.0	25A				Si	M950an
35	600R40B	4.0k	6.0	25	250		175	Si	
36	SODSPC4	4.0k	6.0	25A	300	8.3m	175A	Si	M950p*
37	SODSPF40	4.0k*	6.0	25A				Si	M950an
38	SPS40	4.0k*	6.6	25A				Si	M950an
39	SODTPF40	4.0k*	9.0	25				Si	M950an
40	SODTPH40	4.0k*	9.0	25A				Si	M950an
41	2ASPS40	4.0k*	12	25A				Si	M950an
42	HRSCFS4000	4.0k	15	55	150			Si	A138z
43	SODSPS40	4.0k*	18	25A				Si	M950an
44	15MA400	4.0k	25	121C	450	10m	150J	Si	S562
45	S2KW4C1D	4.0k	40		200		150	Si	M894
46	S2KW4C1N	4.0k	40		200		150	Si	M894
47	S2KW4C1P	4.0k	40		200		150	Si	M894
48	SSF40A	4.0k	50	55	2.5		175	Si	A83de
49	S4KW4C2D	4.0k	60		400		150	Si	M894
50	S4KW4C2N	4.0k	60		400		150	Si	M894
51	S4KW4C2P	4.0k	60		400		150	Si	M894
52	S4KW4C2	4.0k	60	55A	400		150	Si	M894a
53	S4KW4KA1	4.0k	80	55A	400		150	Si	M894
54	HVE40	4.0k	100	50	4.0	8.3m	175A	Si	A298s
55	SSM40	4.0k	125	55	7.0		175	Si	A83de
56	DS412SE40	4.0k	230	55H	1.5k§	10m	150J	Si△	
57	DSZ412SE40	4.0k	230	55H	1.5k§	10m	150J	Si△	
58	H03EA	4.0k	300	90C	5.5k	10m	150J	Si	S517
59	S962SXU40	4.0k	335	100C	5.6k§	10m	150J	Si	M759
60	SR400FV-80	4.0k	400	91C	8.0k§	8.3m	150J	Si△	S502a
61	S1109SXU40	4.0k	470	100C	9.2k§	10m	150J	Si	M759☑
62	FD500EV80	4.0k	500	96C	8.0k§	8.3m	150J	Si△	C240d
63	FD500DV80	4.0k	500	106C	8.0k	8.3m	150J	Si△	M1344
64	SW40KBN515	4.0k	510	100H	9.2k§	10m	160J	Si	M747☑
65	SW40KBR515	4.0k	510	100H	9.2k	10m	160J	Si	S435j
66	AR912P40	4.0k	600	55H	5.6k§	10m	150J	Si△	M1005§%
67	AR912S40	4.0k	600	55H	5.6k§	10m	150J	Si△	M1005♦%
68	DS912SM40	4.0k	600	55C	5.6k§	10m	150J	Si△	M757
69	D401N4000E	4.0k	605	58C	10k	10m	150J	Si	M879
70	D401R4000E	4.0k	605	58C	10k	10m	150J	Si	M879☑
71▼	D629/4000	4k	630	120C	12k§	10m	150J	Si	M1346C
72	SSiP62220	4.0k	750		10k	10m	160J	Si	S561a
73	801PJA400	4.0k	800	113C	16k	10m	150J	Si	M1247
74	AR1109P40	4.0k	920	55H	9.2k§	10m	150J	Si△	M1005§%
75	AR1109S40	4.0k	920	55H	9.2k§	10m	150J	Si△	M1005♦%
76	DS1109SM40	4.0k	970	55C	9.2k§	10m	150J	Si△	M757
77	DS2009SN40	4.0k	1.28k	55C	16k§		165S	Si△	M954
78	AR2009P40	4.0k	1400	55H	17k§	10m	150J	Si△	M1006§%
79	AR2009S40	4.0k	1400	55H	17k§	10m	150J	Si△	M1006♦%
80	FD1600CU-80	4.0k	1.6k	108H	32k§	8.3m	150J	Si△	M1235
81	FD1600CV80	4.0k	1.6k	108C	3.2k§	8.3m	150J	Si△	M1235
82	DS2007SN40	4.0k	1.7k	55C	20k		150J	Si	M954
83	JD2300-40	4.0k	1.7k	150J	35k	8.3m	150J	Si	M946
84	RA204020XX00	4.0k	2.0k		24k		150J	Si	C246n
85	SSiR62220	4.0k	2.0k		31k	10m	160J	Si	S561b
86	FD2500AV80	4.0k	2.5k	111C	550k§	8.3m	150J	Si△	M1019
87	DS412SE41	4.1k	230	55H	1.5k§	10m	150J	Si△	
88	DSZ412SE41	4.1k	230	55H	1.5k§	10m	150J	Si△	
89	S962SXU41	4.1k	335	100C	5.6k§	10m	150J	Si	M759
90	S1109SXU41	4.1k	470	100C	9.2k§	10m	150J	Si	M759☑
91	AR912P41	4.1k	600	55H	5.6k§	10m	150J	Si△	M1005§%
92	AR912S41	4.1k	600	55H	5.6k§	10m	150J	Si△	M1005♦%
93	DS912SM41	4.1k	600	55C	5.6k§	10m	150J	Si△	M757
94	AR1109P41	4.1k	920	55H	9.2k§	10m	150J	Si△	M1005§%
95	AR1109S41	4.1k	920	55H	9.2k§	10m	150J	Si△	M1005♦%
96	DS1109SM41	4.1k	970	55C	9.2k§	10m	150J	Si△	M757
97	DS2009SN41	4.1k	1.28k	55C	16k§		165S	Si△	M954
98	AR2009P41	4.1k	1400	55H	17k§	10m	150J	Si△	M1006§%
99	AR2009S41	4.1k	1400	55H	17k§	10m	150J	Si△	M1006♦%
100	10R42B	4.2k	.10	25	60		175	Si	
101	673-10	4.2k	.18	25A	15	8.3	150	Si	M1166d♦
102	1N2912	4.2k	250m	25A			150S	Si	M122d
103	1N2913	4.2k	250m	25A			150S	Si	A83bd
104	75R42B	4.2k	.75	25	60		175	Si	
105	100R42B	4.2k	1.0	25	60		175	Si	
106	150R42B	4.2k	1.5	25	60		175	Si	
107	200R42B	4.2k	2.0	25	60		175	Si	
108	250R42B	4.2k	2.5	25	250		175	Si	
109	300R42B	4.2k	3.0	25	250		175	Si	
110	350R42B	4.2k	3.5	25	250		175	Si	
111	400R42B	4.2k	4.0	25	250		175	Si	
112	450R42B	4.2k	4.5	25	250		175	Si	
113	500R42B	4.2k	5.0	25	250		175	Si	
114	550R42B	4.2k	5.5	25	250		175	Si	
115	600R42B	4.2k	6.0	25	250		175	Si	
116	DS412SE42	4.2k	230	55H	1.5k§	10m	150J	Si△	
117	DSZ412SE42	4.2k	230	55H	1.5k§	10m	150J	Si△	
118	S962SXU42	4.2k	335	100C	5.6k§	10m	150J	Si	M759
119	S1109SXU42	4.2k	470	100C	9.2k§	10m	150J	Si	M759☑
120	SW42KBN515	4.2k	510	100H	9.2k§	10m	160J	Si	M747☑
121	SW42KBR515	4.2k	510	100H	9.2k	10m	160J	Si	S435j
122	AR912P42	4.2k	600	55H	5.6k§	10m	150J	Si△	M1005§%
123	AR912S42	4.2k	600	55H	5.6k§	10m	150J	Si△	M1005♦%
124	DS912SM42	4.2k	600	55C	5.6k§	10m	150J	Si△	M757
125	AR1109P42	4.2k	920	55H	9.2k§	10m	150J	Si△	M1005§%
126	AR1109S42	4.2k	920	55H	9.2k§	10m	150J	Si△	M1005♦%
127	DS1109SM42	4.2k	970	55C	9.2k§	10m	150J	Si△	M757
128	DS2009SN42	4.2k	1.28k	55C	16k§		165S	Si△	M954
129	AR2009P42	4.2k	1400	55H	17k§	10m	150J	Si△	M1006§%
130	AR2009S42	4.2k	1400	55H	17k§	10m	150J	Si△	M1006♦%
131	JD2300-42	4.2k	1.7k	150J	35k	8.3m	150J	Si	M946
132	RA204220XX00	4.2k	2.0k		24k		150J	Si	C246n
133	DS412SE43	4.3k	230	55H	1.5k§	10m	150J	Si△	
134	DSZ412SE43	4.3k	230	55H	1.5k§	10m	150J	Si△	
135	S962SXU43	4.3k	335	100C	5.6k§	10m	150J	Si	M759
136	S1109SXU43	4.3k	470	100C	9.2k§	10m	150J	Si	M759☑
137	AR912P43	4.3k	600	55H	5.6k§	10m	150J	Si△	M1005§%
138	AR912S43	4.3k	600	55H	5.6k§	10m	150J	Si△	M1005♦%
139	DS912SM43	4.3k	600	55C	5.6k§	10m	150J	Si△	M757
140	AR1109P43	4.3k	920	55H	9.2k§	10m	150J	Si△	M1005§%
141	AR1109S43	4.3k	920	55H	9.2k§	10m	150J	Si△	M1005♦%
142	DS1109SM43	4.3k	970	55C	9.2k§	10m	150J	Si△	M757
143	DS2009SN43	4.3k	1.28k	55C	16k§		165S	Si△	M954
144	AR2009P43	4.3k	1400	55H	17k§	10m	150J	Si△	M1006§%
145	AR2009S43	4.3k	1400	55H	17k§	10m	150J	Si△	M1006♦%
146	10R44B	4.4k	.10	25	60		175	Si	
147	75R44B	4.4k	.75	25	60		175	Si	
148	100R44B	4.4k	1.0	25	60		175	Si	
149	150R44B	4.4k	1.5	25	60		175	Si	
150	200R44B	4.4k	2.0	25	60		175	Si	
151	250R44B	4.4k	2.5	25	250		175	Si	
152	300R44B	4.4k	3.0	25	250		175	Si	
153	350R44B	4.4k	3.5	25	250		175	Si	
154	400R44B	4.4k	4.0	25	250		175	Si	
155	450R44B	4.4k	4.5	25	250		175	Si	
156	500R44B	4.4k	5.0	25	250		175	Si	
157	550R44B	4.4k	5.5	25	250		175	Si	
158	600R44B	4.4k	6.0	25	250		175	Si	
159	DS412SE44	4.4k	230	55H	1.5k§	10m	150J	Si△	
160	DSZ412SE44	4.4k	230	55H	1.5k§	10m	150J	Si△	
161	S962SXU44	4.4k	335	100C	5.6k§	10m	150J	Si	M759
162	DSA401-44GG	4.4k	360	62C	6.2k	10m	150J	Si	M1215
163	DSA401-44LG	4.4k	360	62C	6.2k	10m	150J	Si	M1215
164	DSA403-44GG	4.4k	450	90C	9.3k	10m	150J	Si	M1215
165	DSA403-44L1G	4.4k	450	90C	9.3k	10m	150J	Si	M1215
166	S1109SXU44	4.4k	470	100C	9.2k§	10m	150J	Si	M759☑
167	SW44KBN515	4.4k	510	100H	9.2k§	10m	160J	Si	M747☑
168	SW44KBR515	4.4k	510	100H	9.2k	10m	160J	Si	S435j
169	AR912P44	4.4k	600	55H	5.6k§	10m	150J	Si△	M1005§%
170	AR912S44	4.4k	600	55H	5.6k§	10m	150J	Si△	M1005♦%
171	DS912SM44	4.4k	600	55C	5.6k§	10m	150J	Si△	M757
172	D401N4400E	4.4k	605	58C	10k	10m	150J	Si	M879
173	D401R4400E	4.4k	605	58C	10k	10m	150J	Si	M879☑
174▼	D629/4400	4.4k	630	120C	12k§	10m	150J	Si	M1346C
175	DSA405-44AG	4.4k	700	50C	9.3k	10m	150J	Si	M953
176	AR1109P44	4.4k	920	55H	9.2k§	10m	150J	Si△	M1005§%
177	AR1109S44	4.4k	920	55H	9.2k§	10m	150J	Si△	M1005♦%
178	DSA908-44AG	4.4k	940	100	18k	8.3m	150	Si	M246l
179	DS1109SM44	4.4k	970	55C	9.2k§	10m	150J	Si△	M757
180	DS2009SN44	4.4k	1.28k	55C	16k§		165S	Si△	M954
181	AR2009P44	4.4k	1400	55H	17k§	10m	150J	Si△	M1006§%
182	AR2009S44	4.4k	1400	55H	17k§	10m	150J	Si△	M1006♦%
183	JD2300-44	4.4k	1.7k	150J	35k	8.3m	150J	Si	M946
184	RA204420XX00	4.4k	2.0k		24k		150J	Si	C246n
185	2L45	4.5k	.02	25	10	8.3m	175	Si	A1kp
186	5L45	4.5k	.05	25	10	8.3m	175	Si	A1kp
187	10L45	4.5k	.10	25	20	8.3m	175	Si	A1kp
188	B427-45	4.5k	100m	55	4.0		150	Si△	A50f
189	B587-45	4.5k	100m	55	4.0			Si△	A69r
190	15L45	4.5k	.15	25	20	8.3m	175	Si	A1kp
191	EK450	4.5k	150m	50A	15	8.0m	150A	Si	A3aa
192	20L45	4.5k	.20	25	20	8.3m	175	Si	A1kp
193	200S45	4.5k	200m	55	20	8.3m	150A	Si	A1tp
194	CP126	4.5k	.20	75				Si	M84ap
195	200RS45	4.5k	200m	85	20		150A	Si△	A1tpØ
196	1N2914	4.5k	250m	25A			150S	Si	M122c
197	1N2915	4.5k	250m	25A			150S	Si	A83ax
198	1N2916	4.5k	250m	25A			150S	Si	M122d
199	1N2917	4.5k	250m	25A			150S	Si	A83bd
200	25L45	4.5k	.25	25	20	8.3m	175	Si	A1kp
201	1N1262	4.5k	250m	100A			100A	Si	M84p
202	30L45	4.5k	.30	25	40	8.3m	175	Si	A1kp
203	US45A	4.5k	330m	25A	20	8.3m	150	Si	A83da
204	40L45	4.5k	.40	25	40	8.3m	175	Si	A1kp
205	B588-45	4.5k	400m	55	25			Si△	A69s
206	BA223-45	4.5k	400m	55	25			Si△	A1rx
207	50L45	4.5k	.50	25	40	8.3m	175	Si	A1kp
208	CP127	4.5k	.50	75				Si	M84aq
209	PS2354	4.5k	.53	25A			175A	Si	M22
210	60L45	4.5k	.60	25	40	8.3m	175	Si	A1kp
211	80L45	4.5k	.80	25	60	8.3m	175	Si	A1kp
212	100L45	4.5k	1.0	25	60	8.3m	175	Si	A1kp
213	S962SXU45	4.5k	335	100C	5.6k§	10m	150J	Si	M759
214	AR912P45	4.5k	600	55H	5.6k§	10m	150J	Si△	M1005§%
215	AR912S45	4.5k	600	55H	5.6k§	10m	150J	Si△	M1005♦%
216	DS912SM45	4.5k	600	55C	5.6k§	10m	150J	Si△	M757
217	FD500GV90	4.5k	500k	92C	8.0k§	8.3m	125J	Si△	C244a
218	10R46B	4.6k	.10	25	60		175	Si	
219	75R46B	4.6k	.75	25	60		175	Si	
220	100R46B	4.6k	1.0	25	60		175	Si	

SYMBOLS AND CODES EXPLAINED IN INTERPRETER

11. RECTIFIERS, HIGH VOLTAGE - PIV ≥ 2 kV (Cont'd)

IN ORDER OF: (1) PIV (2) IO MAX (3) @ TEMP & (4) TYPE NUMBER

LINE No.	4 TYPE NUMBER	1 PIV (V)	MAX AVG FWD DC CURRENT 2 Io MAX (A)	3 @ TEMP (°C)	MAX RATING SURGE CURR PEAK 1 Cy (A)	PULSE WIDTH (s)	MAX. TEMP (°C)	MAT	DRAWING NO.
1	150R46B	4.6k	1.5	25	60		175	Si	
2	200R46B	4.6k	2.0	25	60		175	Si	
3	250R46B	4.6k	2.5	25	250		175	Si	
4	300R46B	4.6k	3.0	25	250		175	Si	
5	350R46B	4.6k	3.5	25	250		175	Si	
6	400R46B	4.6k	4.0	25	250		175	Si	
7	450R46B	4.6k	4.5	25	250		175	Si	
8	500R46B	4.6k	5.0	25	250		175	Si	
9	550R46B	4.6k	5.5	25	250		175	Si	
10	600R46B	4.6k	6.0	25	250		175	Si	
11	S962SXU46	4.6k	335	100C	5.6k§	10m	150J	Si	M759
12	AR912P46	4.6k	600	55H	5.6k§	10m	150J	Si△	M1005§%
13	AR912S46	4.6k	600	55H	5.6k§	10m	150J	Si△	M1005♦%
14	DS912SM46	4.6k	600	55C	5.6k§	10m	150J	Si△	M757
15	S962SXU47	4.7k	335	100C	5.6k	10m	150J	Si	M759
16	AR912P47	4.7k	600	55H	5.6k§	10m	150J	Si△	M1005§%
17	AR912S47	4.7k	600	55H	5.6k§	10m	150J	Si△	M1005♦%
18	DS912SM47	4.7k	600	55C	5.6k§	10m	150J	Si△	M757
19♦	DS1112SM47-18	4.7k	870	55	10k	10m	150J	Si	M953
20	1N1142	4.8k	.05	75	3.5	5.0m	170	Si	F57d
21	1N1141	4.8k	.06	75	3.5	5.0m	170	Si	F57f
22	10R48B	4.8k	.10	25	60		175	Si	
23	673-11	4.8k	.16	25A	15	8.3	150	Si	M1166e♦
24	67D048H55FNN	4.8k	250m	50A	35		150A	Si	F12aj
25	SLD4.8T	4.8k	250m	50A	30	8.0m	150A	Si	F57d
26	SLD4.8TS	4.8k	250m	50A	30	8.0m	150A	Si	F57f
27	1N1754	4.8k	.32	75C	6.0		150	Si	F12s
28	1N1753	4.8k	.33	75C	6.0		150	Si	F12t
29	75R48B	4.8k	.75	25	60		175	Si	
30	100R48B	4.8k	1.0	25	60		175	Si	
31	1N2668	4.8k	1.5	25A	15	8.3m	165A	Si	M126h
32	150R48B	4.8k	1.5	25	60		175	Si	
33	200R48B	4.8k	2.0	25	60		175	Si	
34	P48H	4.8k	2.0	55A	230	10m	125A	Si△	M267
35	250R48B	4.8k	2.5	25	250		175	Si	
36	300R48B	4.8k	3.0	25	250		175	Si	
37	350R48B	4.8k	3.5	25	250		175	Si	
38	400R48B	4.8k	4.0	25	250		175	Si	
39	450R48B	4.8k	4.5	25	250		175	Si	
40	500R48B	4.8k	5.0	25	250		175	Si	
41	550R48B	4.8k	5.5	25	250		175	Si	
42	600R48B	4.8k	6.0	25	250		175	Si	
43	UGE0221AY4	4.8k	10	45A	140	10m		Si	M1076
44	S962SXU48	4.8k	335	100C	5.6k	10m	150J	Si	M759
45	AR912P48	4.8k	600	55H	5.6k§	10m	150J	Si△	M1005§%
46	AR912S48	4.8k	600	55H	5.6k§	10m	150J	Si△	M1005♦%
47	DS912SM48	4.8k	600	55C	5.6k§	10m	150J	Si△	M757
48	D401N4800E	4.8k	605	58C	10k	10m	150J	Si	M879
49	D401R4800E	4.8k	605	58C	10k	10m	150J	Si	M879Ø
50▼	D629/4800	4.8k	630	120C	12k§	10m	150J	Si	M1346C
51▼	DS1112SM48-18	4.8k	870	55	10k	10m	150J	Si	M953
52	D631N4800T	4.8k	960	52C	10k	10m	150J	Si	C244b
53	S962SXU49	4.9k	335	100C	5.6k	10m	150J	Si	M759
54	AR912P49	4.9k	600	55H	5.6k§	10m	150J	Si△	M1005§%
55	AR912S49	4.9k	600	55H	5.6k§	10m	150J	Si△	M1005♦%
56	DS912SM49	4.9k	600	55C	5.6k§	10m	150J	Si△	M757
57▼	DS1112SM49-18	4.9k	870	55	10k	10m	150J	Si	M953

PIV ≥ 5 kV

LINE No.	4 TYPE NUMBER	1 PIV (V)	MAX AVG FWD DC CURRENT 2 Io MAX (A)	3 @ TEMP (°C)	MAX RATING SURGE CURR PEAK 1 Cy (A)	PULSE WIDTH (s)	MAX. TEMP (°C)	MAT	DRAWING NO.
61	HV5-5	5.0k	5.0m	40	3.0	8.0m	150A	Si△	A1td
62	HV5-5F	5.0k	5.0m	40	3.0	8.0m	125A	Si△	A1td
63	B412-5-5	5.0k	5.0m	55	4.0		150	Si	A344e
64	KLR5	5.0k	10m	25	5.0		150S	Si	A1hg
65	HV10-5	5.0k	10m	40	3.0	8.0m	150A	Si△	A1td
66	HV10-5F	5.0k	10m	40	3.0	8.0m	125A	Si△	A1td
67	10S50	5.0k	10m	55	1.0	8.3m	150A	Si	A1df
68	B412-5-10	5.0k	10m	55	4.0		150	Si	A344e
69	2L50	5.0k	.02	25	10	8.3m	175	Si	A1kp
70	KL5	5.0k	20m	25	5.0		150S	Si	A1hg
71	MC201#B	5.0k	.02	25	.75	8.0m		Si	A1hy
72	SP5	5.0k	20m	100	3.0	8.3m	150A	Si	A344uØ
73	1N4597	5.0k	.025	40	1.0 §		130A	Si	A1ek
74	HV25-5	5.0k	25m	40	3.0	8.0m	150A	Si△	A1td
75	HV25-5F	5.0k	25m	40	3.0	8.0m	125A	Si△	A1td
76	B412-5-25	5.0k	25m	55	4.0		150	Si	A344e
77	MC200#B	5.0k	.04	25	1.2k	8.0m		Si	A1hy
78	MC1051	5.0k	.04	25				Si	A1gr
79	MC1051A	5.0k	.04	25				Si	A1gr
80	MC1052	5.0k	.04	25				Si	A1gr
81	MC1052A	5.0k	.04	25				Si	A1gr
82	M50F	5.0k	40m	55A	4.0		150A	Si	A1abd
83	M50S	5.0k	40m	55A	4.0		150A	Si	A1abd
84	M50UF	5.0k	40m	55A	4.0		150A	Si	A1abd
85	MHVG50	5.0k	50m		20	1.0m	125	Si	A249e
86	5L50	5.0k	.05	25	10	8.3m	175	Si	A1kp
87	MC051	5.0k	.05	25A			150A	Si	M54c
88	MC051A	5.0k	.05	25A			150A	Si	M54c
89	MC052	5.0k	.05	25A			150A	Si	M54e
90	MC052A	5.0k	.05	25A			150A	Si	M54e
91	PS2425	5.0k	.05	25A				Si	A1hk
92	VG5	5.0k	50m	40A	3.0	8.3m	150A	Si△	A298j
93	LK5	5.0k	50m	50A	2.0	8.0m	150A	Si	A3aa
94	50S50	5.0k	50m	55	2.0	8.3m	150A	Si	A1df
95	HVH5000	5.0k	50m	55	60	8.3m	150	Si	A138c
96	HVHF5000	5.0k	50m	55	60	8.3m	150	Si	A138c
97	HV50E	5.0k	50m	100A			150A	Si	A1xe
98	HV50K	5.0k	50m	100A			150A	Si	A1fe
99	HV50M	5.0k	50m	100A			150A	Si	A1xd
100	HV50P	5.0k	50m	100A			150A	Si	A94q
101	1N1734A	5.0k	50m	175$	9.0	8.0m	200A	Si	A1gd
102	MC5605	5.0k	60m	100	4.0			Si	A60w
103	1N1734	5.0k	.10	25A	2.5	8.0m	150A	Si	A1jh
104	10L50	5.0k	.10	25	20	8.3m	175	Si	A1kp
105	10R50B	5.0k	.10	25	60		175	Si	
106	PS1145	5.0k	.10	25A	2.5 §	8.0m	175A	Si	A1jh
107	B427-50	5.0k	100m	55	4.0		150	Si△	A50f
108	B587-50	5.0k	100m	55	4.0			Si△	A69r
109	VF5	5.0k	130m	40	3.0	8.3m	150	Si	A1aac
110	15L50	5.0k	.15	25	20	8.3m	175	Si	A1kp
111	EK500	5.0k	150m	50A	15	8.0m	150A	Si	A3aa
112	HV50	5.0k	150m	50A	20	8.3m	125A	Si*	A1ty
113	HVG-5	5.0k	150m	55A	8.0		150A	Si	A313e
114	SCFM5K	5.0k	150m	55A	25		175J	Si	A440
115	SCHM5K	5.0k	150m	55A	25		175J	Si	A440
116	673-12	5.0k	.16	25A	15	8.3	150	Si	M1166c♦
117	20L50	5.0k	.20	25	20	8.3m	175	Si	A1kp
118	CL5#B	5.0k	200m	25	10		150S	Si△	A83cz
119	200S50	5.0k	200m	55	20	8.3m	150A	Si	A1tp
120	HVC500	5.0k	.20	55A	6.0		150	Si	M291d
121	CP129	5.0k	.20	75				Si	M84as
122	200RS50	5.0k	200m	85	20		150A	Si△	A1tpØ
123	1N2918	5.0k	250m	25A			150S	Si	M122c
124	1N2919	5.0k	250m	25A			150S	Si	A83ax
125	25L50	5.0k	.25	25	20	8.3m	175	Si	A1kp
126	M50K	5.0k	250m	25A	2.0	10m	150A	Si△	A83k
127	NTD05	5.0k	.25	25A	10		125A	Si△	A1hm
128	67D050H04TNN	5.0k	250m	50A	50		140A	Si	M101c
129	67D050H53PNN	5.0k	250m	50A	35		150A	Si	A1yx
130	67D050H55FNN	5.0k	250m	50A	35		150A	Si	F12aj
131	BH500	5.0k	250m	75A	20	8.3m	150A	Si	DO27
132	GI250-5	5.0k	250m	75A	15		175	Si	E204p
133	30L50	5.0k	.30	25	40	8.3m	175	Si	A1kp
134	B223-50	5.0k	.30	25	60		175A	Si	A1rx
135	PS1445	5.0k	.30	25A			175A	Si	F13b
136	SLD5U	5.0k	300m	25A	30	8.0m	150A	Si	Aljd
137	SLDHV5	5.0k	.30	25A	22		175A	Si	M239d
138	423MD11AH1	5.0k	0.30	50A	50		150A	Si	M1233
139	B588-50	5.0k	300m	55	25			Si△	A69s
140	BA223-50	5.0k	300m	55	25			Si△	A1rx
141	US50A	5.0k	330m	25A	20	8.3m	150	Si	A83da
142	HV-5	5.0k	350m	25A	50		135A	Si	M1258
143	PS1852	5.0k	350m	25			200A	Si	A1jh
144	67D050H20TTS	5.0k	350m	50A	50		140A	Si	M101h
145	424MH9AS1	5.0k	350m	55A	35		110J	Si	A443a
146	40L50	5.0k	.40	25	40	8.3m	175	Si	A1kp
147	HV850	5.0k	400m	50	50	8.0m	175S	Si	M212j
148	424MD10AE1	5.0k	450m	55C	35		110A	Si	M978†Ø
149	424MH10AE1	5.0k	450m	55C	35		110A	Si	M978†Ø
150♦	D0.42S5	5.0k	455m	25A	§	10m	125J	Si	A433
151	R5000	5.0k	0.5		30	8.0m	175A	Si	DO41
152	50L50	5.0k	.50	25	40	8.3m	175	Si	A1kp
153	HC-5	5.0k	500m	25A	250		135A	Si	M919
154	425NH9AB1	5.0k	500m	50A	50		150A	Si	A69an
155	HVC50	5.0k	500m	50A	60	8.3m	125A	Si*	A1ey
156	423PH5AS1	5.0k	500m	55A	50		125J	Si	A443
157	F927-11G	5.0k	500m	55A	50	8.3m	175	Si	A394
158	KVF5	5.0k	500m	55A	50		175A	Si△	A83aq
159	SHVM5	5.0k	500m	55	14		150S	Si	S416
160	SP50F	5.0k	500m	55A	40		150A	Si	A443a
161	SP50S	5.0k	500m	55A	40		150A	Si	A443
162	SSCH5000	5.0k	500m	55A	50		150	Si	A449
163	PS2355	5.0k	.53	25A			175A	Si	M22
164	60L50	5.0k	.60	25	40	8.3m	175	Si	A1kp
165	SPCHV5	5.0k	600m	25A	23	8.3m	175A	Si	M950c*
166	USS5	5.0k	.60	25A	25	8.3m	150	Si	S543
167	SX50	5.0k	600m	50	40	8.3m	150	Si	A344b
168	SXS50	5.0k	600m	50	40	8.3m	150	Si	A344b
169	423MH10AE1	5.0k	600m	55C	50		125A	Si	M978†Ø
170	USB5	5.0k	.68	25C	80	8.3m	150	Si	S543
171	75R50B	5.0k	.75	25	60		175	Si	
172	423TB8AH1	5.0k	0.75	50A	50		150A	Si	M1233
173	524MH9AS1	5.0k	750m	55A	100		110J	Si	A440a
174	Z50UF	5.0k	750m	55A	40		150A	Si	A1abc
175	80L50	5.0k	.80	25	60	8.3m	175	Si	A1kp
176	SPFHV50	5.0k*	800m	25A			150A	Si	M950ao
177	Z50F	5.0k	800m	55A	40		150A	Si	A1abc
178	524MD10AE1	5.0k	850m	55C	100		110A	Si	M978†Ø
179	524MH10AE1	5.0k	.85	55C	100		110A	Si	M978†Ø
180	TPFHV50	5.0k*	900m	25A				Si	M950ao
181	TPHHV50	5.0k*	900m	25A				Si	M950ao
182	424MC10AE1	5.0k	900m	55C	35		110A	Si	M978†Ø
183	Z50S	5.0k	1.0		40		150A	Si	A1abc
184	100L50	5.0k	1.0	25	60	8.3m	175	Si	A1kp
185	100R50B	5.0k	1.0	25	60		175	Si	
186	423MC11AH1	5.0k	1.00	50A	50		150A	Si	M1233
187	423MH11AH1	5.0k	1.00	50A	50		150A	Si	M1233
188	HC5	5.0k	1.0	50C	50	8.0m	175C	Si	M919
189	KV05	5.0k	1.0	50A	50		150A	Si	M462
190	SDH5KM	5.0k	1.0	55B	50 §		150J	Si	M978Ø
191	SDHD5KM	5.0k	1.0	55B	50 §		150J	Si	M978Ø
192	SDHF5KM	5.0k	1.0	55A	50		175J	Si	M978
193	SM50	5.0k	1.0	55	4.0	8.0m	175A	Si	A344d
194	SLD5	5.0k	1.1	30A	50		125A	Si△	M239d
195	KVP5	5.0k	1.1	50A	50		150A	Si△	M239d
196	523MH9AS1	5.0k	1.1	55A	125		125J	Si	A440a
197	1N5595	5.0k	1.15	100C	30		150C	Si	S221
198	423NC7AE1	5.0k	1.2	55C	500		125A	Si	M978†Ø
199	523MH10AE1	5.0k	1.2	55C	125		125A	Si	M978†Ø
200	523ND7AE1	5.0k	1.2	55C	125		125A	Si	M978†Ø
201	1N4868	5.0k	1.25	40A	150 §		125A	Si	M326b
202	67C050H20LSS	5.0k	1.25	50A	90		140A	Si	M101h
203	1N5600	5.0k	1.4	100C	100		150C	Si	S221
204	SC50	5.0k	1.5		50			Si	M462
205	SC50F	5.0k	1.5		35			Si	M462
206	150R50B	5.0k	1.5	25	60		175	Si	
207	VC50	5.0k	1.5	40C	50	8.3m	125A	Si△	M430
208	HRSCHM5K	5.0k	1.5	55	14			Si	A440
209	HC5000F	5.0k	1.5	75C	100			Si	M1273
210	J650-12	5.0k	1.65	75C	30			Si	S507
211	524MC10AE1	5.0k	1.7	55C	100		110A	Si	M978†Ø
212	SPSHV50	5.0k*	1.8	25A				Si	M950ao
213	2ASLD5	5.0k	2.0	25A	200		175A	Si	M239d
214	2ASPC5	5.0k	2.0	25A	200	8.3m	100	Si	M950c*.
215	200R50B	5.0k	2.0	25	60		175	Si	
216	SPF50	5.0k*	2.0	25A			150A	Si	M950ao
217	S2HVM5	5.0k	2.0	55	50		150S	Si	S416
218	SDHN5KM	5.0k	2.0	55A	50		175J	Si	M978
219	SDHP5KM	5.0k	2.0	55A	50		175J	Si	M978
220	HC5000S	5.0k	2.0	75C	100			Si	M1273

SYMBOLS AND CODES EXPLAINED IN INTERPRETER

11. RECTIFIERS, HIGH VOLTAGE - PIV ≥ 5 kV (Cont'd)

IN ORDER OF: (1) PIV (2) IO MAX (3) @ TEMP & (4) TYPE NUMBER

LINE No.	4 TYPE NUMBER	1 PIV (V)	MAX AVG FWD DC CURRENT 2 Io MAX (A)	3 @ TEMP (°C)	MAX RATING SURGE CURR PEAK 1 Cy (A)	PULSE WIDTH (s)	MAX. TEMP (°C)	MAT	DRAWING NO.
1	J650-10	5.0k	2.0	75C	100			Si	S507
2	SPC5	5.0k	2.2	25A	50	8.3m	175A	Si	M950c*
3	KX50	5.0k	2.2	50	150	8.3m	150	Si	A344a
4	FP50F	5.0k	2.2	55A	200		150A	Si	A440a
5	FP50S	5.0k	2.2	55A	200		150A	Si	A440a
6	HVHS5000	5.0k	2.2	55A	200	8.3m	150A	Si	A138x
7	S3HVM5	5.0k	2.4	25	150		150S	Si	S416
8	523NC7AE1	5.0k	2.4	55C	125		125A	Si	M978†Ø
9	S6HVM5	5.0k	2.4	55	250		150S	Si	S416
10	250R50B	5.0k	2.5	25	250		175	Si	
11	CP128	5.0k	2.5	50				Si	M84ar
12	SDH5KS	5.0k	2.5	55B	150 §		150J	Si	M978Ø
13	SDHD5KS	5.0k	2.5	55B	150 §		150J	Si	M978Ø
14	SDHF5KS	5.0k	2.5	55A	150		175J	Si	M978
15	300R50B	5.0k	3.0	25	250		175	Si	
16	KHP5	5.0k	3.0	25A	300		175A	SiΔ	M239w
17	TPF50	5.0k*	3.0	25A				Si	M950ao
18	TPH50	5.0k*	3.0	25A				Si	M950ao
19	SODSLD5	5.0k	3.0	30A	290		140A	SiΔ	M239w
20	HD5000F	5.0k	3.3	75C	100			Si	M1273
21	350R50B	5.0k	3.5	25	250		175	Si	
22	1N5603	5.0k	3.5	100C	200		150C	Si	S293
23	2ASPF50	5.0k*	4.0	25A			150A	Si	M950ao
24	400R50B	5.0k	4.0	25	250		175	Si	
25	J650-6	5.0k	4.4	75C	100			Si	S508
26	UGB5	5.0k	4.4	75C	100	8.3m	150	Si	S293
27	450R50B	5.0k	4.5	25	250		175	Si	
28	HD5000S	5.0k	4.5	75C	200			Si	M1273
29	UDE5	5.0k	4.5	100C	200	8.3m	150	Si	S542
30	500R50B	5.0k	5.0	25	250		175	Si	
31	HRSCH5000	5.0k	5.0	55	50			Si	A138f
32	SCH5000	5.0k	5.0	55A	50		175	Si	A138c
33	SDA168N	5.0k	5.0	55C	150		125	†	M1159
34	SDHN5KS	5.0k	5.0	55A	150		175J	Si	M978
35	SDHP5KS	5.0k	5.0	55A	150		175J	Si	M978
36	J650-3	5.0k	5.0	75C	200			Si	S508
37	550R50B	5.0k	5.5	25	250		175	Si	
38	SCPND5	5.0k	5.5	55A	150		175J	Si	M1259a
39	2ATPF50	5.0k*	6.0	25A				Si	M950ao
40	2ATPH50	5.0k*	6.0	25A				Si	M950ao
41	600R50B	5.0k	6.0	25	250		175	Si	
42	SODSPC5	5.0k	6.0	25A	300	8.3m	175A	Si	M950q*
43	SODSPF50	5.0k*	6.0	25A				Si	M950ao
44	SPS50	5.0k*	6.6	25A				Si	M950ao
45	SODTPF50	5.0k*	9.0	25				Si	M950ao
46	SODTPH50	5.0k*	9.0	25A				Si	M950ao
47	SCPNN5	5.0k	11	55A	150		175J	Si	M1259a
48	SCPNP5	5.0k	11	55A	150		175J	Si	M1259a
49	2ASPS50	5.0k*	12	25A				Si	M950ao
50	SODSPS50	5.0k*	18	25A				Si	M950ao
51	SCHS5000	5.0k	20.0	55	150		175A	Si	A138x
52	HRSCHS5000	5.0k	20	150	150			Si	A138w
53	SSF50A	5.0k	50	55	2.5		175	Si	A83de
54	SSF60A	5.0k	50	55	2.5		175	Si	A83de
55	SSM50A	5.0k	50	55	5.0		175	Si	A83de
56	HVE50	5.0k	100	50	4.0	8.3m	175A	Si	A298s
57	S962SXU50	5.0k	335	100C	5.6k	10m	150J	Si	M759
58	DSA401-50GG	5.0k	360	62C	6.2k	10m	150J	Si	
59	DSA401-50LG	5.0k	360	62C	6.2k	10m	150J	Si	M1215
60	DSA403-50GG	5.0k	450	90C	9.3k	10m	150J	Si	M1215
61	DSA403-50L1G	5.0k	450	90C	9.3k	10m	150J	Si	M1215
62	500HXD25	5.0k	500	150J	7.2k	10m	150J	Si	M998
63	AR912P50	5.0k	600	55H	5.6k§	10m	150J	SiΔ	M1005§%
64	AR912S50	5.0k	600	55H	5.6k§	10m	150J	SiΔ	M1005♦%
65	DS912SM50	5.0k	600	55C	5.6k§	10m	150J	SiΔ	M757
66	DSA405-50AG	5.0k	700	50C	9.3k	10m	150J	Si	M953
67▼	DS1112SM50-18	5.0k	870	55	10k	10m	150J	Si	M953
68	DSA908-50AG	5.0k	940	100	18k	8.3m	150	Si	M246l
69	S962SXU51	5.1k	335	100C	5.6k	10m	150J	Si	M759
70	AR912P51	5.1k	600	55H	5.6k§	10m	150J	SiΔ	M1005§%
71	AR912S51	5.1k	600	55H	5.6k§	10m	150J	SiΔ	M1005♦%
72	DS912SM51	5.1k	600	55C	5.6k§	10m	150J	SiΔ	M757
73▼	DS1112SM51-18	5.1k	870	55	10k	10m	150J	Si	M953
74	S962SXU52	5.2k	335	100C	5.6k	10m	150J	Si	M759
75	AR912P52	5.2k	600	55H	5.6k§	10m	150J	SiΔ	M1005§%
76	AR912S52	5.2k	600	55H	5.6k§	10m	150J	SiΔ	M1005♦%
77	DS912SM52	5.2k	600	55C	5.6k§	10m	150J	SiΔ	M757
78▼	DS1112SM52-18	5.2k	870	55	10k	10m	150J	Si	M953
79	S962SXU53	5.3k	335	100C	5.6k	10m	150J	Si	M759
80	AR912P53	5.3k	600	55H	5.6k§	10m	150J	SiΔ	M1005§%
81	AR912S53	5.3k	600	55H	5.6k§	10m	150J	SiΔ	M1005♦%
82	DS912SM53	5.3k	600	55C	5.6k§	10m	150J	SiΔ	M757
83▼	DS1112SM53-18	5.3k	870	55	10k	10m	150J	Si	M953
84	S962SXU54	5.4k	335	100C	5.6k	10m	150J	Si	M759
85	AR912P54	5.4k	600	55H	5.6k§	10m	150J	SiΔ	M1005§%
86	AR912S54	5.4k	600	55H	5.6k§	10m	150J	SiΔ	M1005♦%
87	DS912SM54	5.4k	600	55C	5.6k§	10m	150J	SiΔ	M757
88▼	DS1112SM54-18	5.4k	870	55	10k	10m	150J	Si	M953
89	2L55	5.5k	.02	25	10	8.3m	175	Si	A1ks
90	5L55	5.5k	.05	25	10	8.3m	175	Si	A1ks
91	B427-55	5.5k	50m	55	4.0		150	SiΔ	A50f
92	B587-55	5.5k	50m	55	4.0			SiΔ	A69r
93	10L55	5.5k	.10	25	20	8.3m	175	Si	A1ks
94	15L55	5.5k	.15	25	20	8.3m	175	Si	A1ks
95	20L55	5.5k	.20	25	20	8.3m	175	Si	A1ks
96	1N2920	5.5k	250m	25A			150S	Si	M122d
97	1N2921	5.5k	250m	25A			150S	Si	A83bd
98	25L55	5.5k	.25	25	20	8.3m	175	Si	A1ks
99	30L55	5.5k	.30	25	40	8.3m	175	Si	A1ks
100	B588-55	5.5k	300m	55	25			SiΔ	A69s
101	BA223-55	5.5k	300m	55	25			SiΔ	A1rx
102	40L55	5.5k	.40	25	40	8.3m	175	Si	A1ks
103	50L55	5.5k	.50	25	40	8.3m	175	Si	A1ks
104	60L55	5.5k	.60	25	40	8.3m	175	Si	A1ks
105	80L55	5.5k	.80	25	60	8.3m	175	Si	A1ks
106	100L55	5.5k	1.0	25	60	8.3m	175	Si	A1ks
107	S962SXU55	5.5k	335	100C	5.6k	10m	150J	Si	M759
108	AR912P55	5.5k	600	55H	5.6k§	10m	150J	SiΔ	M1005§%
109	AR912S55	5.5k	600	55H	5.6k§	10m	150J	SiΔ	M1005♦%
110	DS912SM55	5.5k	600	55C	5.6k§	10m	150J	SiΔ	M757
111▼	DS1112SM55-18	5.5k	870	55	10k	10m	150J	Si	M953
112	P56H	5.6k	2.0	55A	230	10m	125A	SiΔ	M267
113	S962SXU56	5.6k	335	100C	5.6k	10m	150J	Si	M759
114	AR912P56	5.6k	600	55H	5.6k§	10m	150J	SiΔ	M1005§%
115	AR912S56	5.6k	600	55H	5.6k§	10m	150J	SiΔ	M1005♦%
116	DS912SM56	5.6k	600	55C	5.6k§	10m	150J	SiΔ	M757
117▼	DS1112SM56-18	5.6k	870	55	10k	10m	150J	Si	M953
118	HV106	6.0k	100n		10			Si	A83cr
119	HV-06SS	6.0k	2.0m	100C	500m	10m	110J	SiΔ	A3af
120	GHV-06SSN	6.0k	2.0m	110C	1.0	10m	120J	SiΔ	A313g
121	ESJA25-06	6.0k	5.0m		500m		100C	Si	A428a
122	CRG60	6.0k	10m		20	1.0m	125	Si	A1ux
123	2L60	6.0k	.02	25	10	8.3m	175	Si	A1ks
124	MC203#B	6.0k	.02	25	.75	8.0m		Si	A1hy
125	SP6	6.0k	20m	25	3.0	8.3m	150A	Si	A267e
126	MC1062	6.0k	.025	25				Si	A1kd
127	MC1062A	6.0k	.025	25				Si	A1kd
128	M60F	6.0k	25m	55A	2.0		150A	Si	A1abd
129	M60S	6.0k	25m	55A	2.0		150A	Si	A1abd
130	M60UF	6.0k	25m	55A	2.0		150A	Si	A1abd
131	HV60EL	6.0k	25m	100A			150A	Si	A1xe
132	HV60KL	6.0k	25m	100A			150A	Si	A1fe
133	HV60ML	6.0k	25m	100A			150A	Si	A1xd
134	NKV6F	6.0k	30m	40A	3.0		120J	Si	A334a
135	MC1061	6.0k	.035	25				Si	A1gr
136	MC1061A	6.0k	.035	25				Si	A1gr
137	MC202#B	6.0k	.04	25	1.2k	8.0m		Si	A1hy
138	MHVG60	6.0k	50m		20	1.0m	125	Si	A249e
139	5L60	6.0k	.05	25	10	8.3m	175	Si	A1ks
140	MC061	6.0k	.05	25A			150A	Si	M54c
141	MC061A	6.0k	.05	25A			150A	Si	M54c
142	MC062	6.0k	.05	25A			150A	Si	M54g
143	MC062A	6.0k	.05	25A			150A	Si	M54g
144	PS2426	6.0k	.05	25A				Si	A1hk
145	VB60	6.0k	50m	40A	3.0	8.3m	150A	SiΔ	A298m
146	LK6	6.0k	50m	50A	2.0	8.0m	150A	Si	A3aa
147	B427-60	6.0k	50m	55	4.0		150	SiΔ	A50f
148	B587-60	6.0k	50m	55	4.0			SiΔ	A69r
149	HA60E	6.0k	50m	55A			125A	Si	A1xe
150	HA60K	6.0k	50m	55A			125A	Si	A1fe
151	HA60P	6.0k	50m	55A			125A	Si	A94q
152	1N1143	6.0k	.05	75	3.5	5.0m	170	Si	F57f
153	1N2380	6.0k	.05	100A	12	8.3m	150A	Si	A1nf
154	1N1143A	6.0k	.065	75	3.5	5.0m	170	Si	F57g
155	1N2383	6.0k	.10	25A	6.0	8.0m	150A	Si	A1kv
156	10L60	6.0k	.10	25	20	8.3m	175	Si	A1ks
157	PS1146	6.0k	.10	25A	2.5 §	8.0m	175A	Si	A1kv
158	1N4505	6.0k	.10	50A	20 §		125A	Si	A1sr
159	1N3711	6.0k	.15	25A	5.0		150A	Si	A1pn
160	15L60	6.0k	150m	25	20	8.3m	175	Si	A1ks
161	EK600	6.0k	150m	50A	15	8.0m	150A	Si	A3aa
162	HV60	6.0k	150m	50A	20	8.3m	125A	Si*	A1ty
163	HVC600	6.0k	.15	55A	4.5		150	Si	M291e
164	HP6	6.0k	150m	85	30	8.0m		Si	A344o
165	HS50	6.0k	.175	25A	5.0	10m	150J	Si	A1ns
166	20L60	6.0k	.20	25	20	8.3m	175	Si	A1ks
167	B223-60	6.0k	.20	25	60		175A	Si	A1rx
168	ME60	6.0k	200m	25A	2.5	10m	125J	Si	A1wn
169	SLD6T	6.0k	200m	50A	30	8.0m	150A	Si	F57g
170	SLD6VS	6.0k	200m	50A	30	8.0m	150A	Si	Alkt
171	B588-60	6.0k	200m	55	25			SiΔ	A69s
172	BA223-60	6.0k	200m	55	25			SiΔ	A1rx
173	CP130	6.0k	.20	75				Si	M84at
174	HV206	6.0k	250m		20			Si	A83cu
175	1N2922	6.0k	250m	25A			150S	Si	M122d
176	1N2923	6.0k	250m	25A			150S	Si	A83bd
177	25L60	6.0k	.25	25	20	8.3m	175	Si	A1ks
178	M60K	6.0k	250m	25A	2.0	10m	150A	SiΔ	A83k
179	NTD06	6.0k	.25	25A	10		125A	SiΔ	A1hm
180	SLD6V	6.0k	250m	50A	30	8.0m	150A	Si	Alnw
181	1N1755	6.0k	.29	75C	6.0		150	Si	F12t
182	ED6C3	6.0k	300m	5C	30	10m	125J	Si	S557
183	30L60	6.0k	.30	25	40	8.3m	175	Si	A1ks
184	PS1446	6.0k	.30	25A			175A	Si	F13b
185	SLDHV6	6.0k	.30	25A	22		175A	Si	M239d
186	US60A	6.0k	300m	25A	20	8.3m	150	Si	A83da
187	ED-6C3	6.0k	300m	50C	30	10m	125J	Si	
188	1N2383A	6.0k	350m	25A	9.0	8.0m	200A	Si	A1gd
189	PS1853	6.0k	350m	25			200A	Si	A1kn
190	1N1756	6.0k	.36	75C	6.0		150	Si	F12t
191	40L60	6.0k	.40	25	40	8.3m	175	Si	A1ks
192	425NH10AB1	6.0k	400m	50A	50		150A	Si	A69an
193	HV860	6.0k	400m	50	50	8.0m	175S	Si	M212k
194	SX60	6.0k	400m	50	25	8.3m	150	Si	A344b
195	SXS60	6.0k	400m	50	25	8.3m	150	Si	A344b
196	Z60UF	6.0k	400m	55A	25		150A	Si	A1abc
197	HSKE2500/1100-.3								
		6.0k	450m	45A	50	10m	150J	Si	A167e
198	PS2356	6.0k	.48	25A			175A	Si	M22
199	1RM60	6.0k	500m	25A	12	10m	150J	Si	M62g
200	50L60	6.0k	.50	25	40	8.3m	175	Si	A1ks
201	D60H	6.0k	500m	25A	30	10m	100A	SiΔ	M62
202	HVC60	6.0k	500m	50A	60	8.3m	125A	Si*	A1ey
203	Z60F	6.0k	500m	55A	25		150A	Si	A1abc
204	60L60	6.0k	.60	25	40	8.3m	175	Si	A1ks
205	SPCHV6	6.0k	600m	25A	23	8.3m	175A	Si	M950d*
206	SPFHV60	6.0k*	600m	25A			150A	Si	M950ap
207	Z60S	6.0k	600m	55A	25		150A	Si	A1abc
208	HVPR10-06	6k	750m	50C	250		125S	Si	
209	80L60	6.0k	.80	25	60	8.3m	175	Si	A1ks
210	TPFHV60	6.0k*	900m	25A				Si	M950ap
211	TPHHV60	6.0k*	900m	25A				Si	M950ap
212	M60A	6.0k	1.0		5.0		150	Si	A294J
213	100L60	6.0k	1.0	25	60	8.3m	175	Si	A1ks
214	SLD6	6.0k	1.0	30A	50		125A	SiΔ	M239d
215	KVP6	6.0k	1.0	50A	50		150A	SiΔ	M239d
216	SC60	6.0k	1.5		50			Si	M462
217	SC60F	6.0k	1.5		35			Si	M462
218	VC60	6.0k	1.5	40C	50	8.3m	125A	SiΔ	M430
219	KX60	6.0k	1.5	50	100	8.3m	150	Si	A344a

SYMBOLS AND CODES EXPLAINED IN INTERPRETER

11. RECTIFIERS, HIGH VOLTAGE - PIV ≥ 5 kV (Cont'd)

IN ORDER OF: (1) PIV (2) IO MAX (3) @ TEMP & (4) TYPE NUMBER

LINE No.	4 TYPE NUMBER	1 PIV (V)	MAX AVG FWD DC CURRENT 2 Io MAX (A)	3 @ TEMP (°C)	MAX RATING SURGE CURR PEAK 1 Cy (A)	PULSE WIDTH (s)	MAX. TEMP (°C)	MAT	DRAWING NO.
1	KXS60	6.0k	1.5	50	100	8.3m	150	Si	A344a
2	2ASLD6	6.0k	1.8	25A	200		175A	Si	M239d
3	2ASPC6	6.0k	1.8	25A	200	8.3m	100	Si	M950d*
4	SPSHV60	6.0k*	1.8	25A				Si	M950ap
5	6RM60	6.0k	2.0	25A	150	10m	150J	Si	M62e
6	SPC6	6.0k	2.0	25A	50	8.3m	175A	Si	M950d*
7	SPF60	6.0k*	2.0	25A			150A	Si	M950ap
8	KHP6	6.0k	2.75	25A	300		175A	Si△	M239x
9	SODSLD6	6.0k	2.75	30A	290		140A	Si△	M239x
10	TPF60	6.0k*	3.0	25A				Si	M950ap
11	TPH60	6.0k*	3.0	25A				Si	M950ap
12	2ASPF60	6.0k*	3.6	25A			150A	Si	M950ap
13	2ATPF60	6.0k*	5.4	25A				Si	M950ap
14	2ATPH60	6.0k*	5.4	25A				Si	M950ap
15	SODSPC6	6.0k	5.5	25A	300	8.3m	175A	Si	M950r*
16	SODSPF60	6.0k*	5.5	25A				Si	M950ap
17	SCPHN6	6.0k	5.5	55A	150		175J	Si	M1259
18	10RM60	6.0k	6.0	25A	150	1.0u	150J	Si	M832
19	20RM60	6.0k	6.0	25A	250	1.0u	150J	Si	M832
20	SPS60	6.0k*	6.0	25A				Si	M950ap
21	SODTPF60	6.0k*	8.2	25				Si	M950ap
22	SODTPH60	6.0k*	8.2	25A				Si	M950ap
23	2ASPS60	6.0k*	10.8	25A				Si	M950ap
24	HRSCFS6000	6.0k	15	55	150			Si	A138z
25	HRSCFS8000	6.0k	15	55	150			Si	A138z
26	SCFS6000	6.0k	15	55A	150		175J	Si	A440b
27	SODSPS60	6.0k*	16.5	25A				Si	M950ap
28	SSM60A	6.0k	50	55	5.0		175	Si	A83de
29	S4KW6C3D	6.0k	60		400		150	Si	M894
30	S4KW6C3N	6.0k	60		400		150	Si	M894
31	S4KW6C3P	6.0k	60		400		150	Si	M894
32	S4KW6C3	6.0k	60	55A	400		150	Si	M894b
33	P64H	6.4k	2.0	55A	230	10m	125A	Si△	M267
34	2L65	6.5k	.02	25	10	8.3m	175	Si	A1md
35	5L65	6.5k	.05	25	10	8.3m	175	Si	A1md
36	B427-65	6.5k	50m	55	4.0		150	Si△	A50f
37	B587-65	6.5k	50m	55	4.0			Si△	A69r
38	10L65	6.5k	.10	25	20	8.3m	175	Si	A1md
39	15L65	6.5k	.15	25	20	8.3m	175	Si	A1md
40	HVC650	6.5k	.15	55A	4.5		150	Si	M291f
41	20L65	6.5k	.20	25	20	8.3m	175	Si	A1md
42	B588-65	6.5k	200m	55	25			Si△	A69s
43	BA223-65	6.5k	200m	55	25			Si△	A1rx
44	1N2924	6.5k	250m	25A			150S	Si	M122d
45	1N2925	6.5k	250m	25A			150S	Si	A83bd
46	25L65	6.5k	.25	25	20	8.3m	175	Si	A1md
47	30L65	6.5k	.30	25	40	8.3m	175	Si	A1md
48	40L65	6.5k	.40	25	40	8.3m	175	Si	A1md
49	50L65	6.5k	.50	25	40	8.3m	175	Si	A1md
50	60L65	6.5k	.60	25	40	8.3m	175	Si	A1md
51	80L65	6.5k	.80	25	60	8.3m	175	Si	A1md
52	100L65	6.5k	1.0	25	60	8.3m	175	Si	A1md
53	1N1698	6.6k	.62	75A	3.5		160A	Si	F12t
54	HV5-7	7.0k	5.0m	40	3.0	8.0m	150A	Si△	A1td
55	HV5-7F	7.0k	5.0m	40	3.0	8.0m	125A	Si△	A1td
56	B412-7-5	7.0k	5.0m	55	4.0		150	Si	A344e
57	HV10-7	7.0k	10m	40	3.0	8.0m	150A	Si△	A1td
58	HV10-7F	7.0k	10m	40	3.0	8.0m	125A	Si△	A1td
59	B412-7-10	7.0k	10m	55	4.0		150	Si	A344e
60	2L70	7.0k	20m	25	10	8.3m	175	Si	A1md
61	MC205#B	7.0k	.02	25	.75	8.0m		Si	A1hy
62	SP7	7.0k	20m	25	3.0	8.3m	150A	Si	A267e
63	HV25-7	7.0k	25m	40	3.0	8.0m	150A	Si△	A1td
64	HV25-7F	7.0k	25m	40	3.0	8.0m	125A	Si△	A1td
65	VG7	7.0k	25m	40A	3.0	8.3m	150A	Si△	A298j
66	B412-7-25	7.0k	25m	55	4.0		150	Si	A344e
67	HV70EL	7.0k	25m	100A			150A	Si	A1xe
68	MC204	7.0k	.04	25	1.2k	8.0m		Si	A1hy
69	5L70	7.0k	.05	25	10	8.3m	175	Si	A1md
70	PS2427	7.0k	.05	25A				Si	A1hk
71	B427-70	7.0k	50m	55	4.0		150	Si△	A50f
72	B587-70	7.0k	50m	55	4.0			Si△	A69r
73	10L70	7.0k	.10	25	20	8.3m	175	Si	A1md
74	VF7	7k	115m	40	3.0	8.3m	150	Si	A1aac
75	15L70	7.0k	.15	25	20	8.3m	175	Si	A1md
76	B588-70	7.0k	150m	55	25			Si△	A69s
77	BA223-70	7.0k	150m	55	25			Si△	A1rx
78	20L70	7.0k	.20	25	20	8.3m	175	Si	A1md
79	25L70	7.0k	.25	25	20	8.3m	175	Si	A1md
80	67D075H04TNN	7.0k	250m	50A	50		140A	Si	M101c
81	30L70	7.0k	.30	25	40	8.3m	175	Si	A1md
82	PS1447	7.0k	.30	25A			175A	Si	F13c
83	SLDHV7	7.0k	.30	25A	22		175A	Si	M239e
84	T7KV	7.0k	.30	25A			125A	Si	
85	US70A	7.0k	300m	25A	20	8.3m	150	Si	A83da
86	HV870	7.0k	300m	50	50	8.0m	175S	Si	M212k
87	CP131	7.0k	.30	75				Si	M84au
88	40L70	7.0k	.40	25	40	8.3m	175	Si	A1md
89	PS2357	7.0k	.43	25A			175A	Si	M22
90	50L70	7.0k	.50	25	40	8.3m	175	Si	A1md
91	S1082	7.0k	500m	55	50	8.3		Si	M240f
92	60L70	7.0k	.60	25	40	8.3m	175	Si	A1md
93	SPCHV7	7.0k	600m	25A	23	8.3m	175A	Si	M950e*
94	SPFHV70	7.0k*	600m	25A			150A	Si	M950aq
95	80L70	7.0k	.80	25	60	8.3m	175	Si	A1md
96	TPFHV70	7.0k*	900m	25A				Si	M950aq
97	TPHHV70	7.0k*	900m	25A				Si	M950aq
98	100L70	7.0k	1.0	25	60	8.3m	175	Si	A1md
99	SLD7	7.0k	1.0	30A	50		125A	Si△	M239e
100	KVP7	7.0k	1.0	50A	50		150A	Si△	M239e
101	SC70	7.0k	1.5		50			Si	M462
102	SC70F	7.0k	1.5		35			Si	M462
103	VC70	7.0k	1.5	40C	50	8.3m	125A	Si△	M430
104	2ASLD7	7.0k	1.8	25A	200		175A	Si	M239e
105	2ASPC7	7.0k	1.8	25A	200	8.3m	100	Si	M950e*
106	SPSHV70	7.0k*	1.8	25A				Si	M950aq
107	SPC7	7.0k	2.0	25A	50	8.3m	175A	Si	M950e*
108	SPF70	7.0k*	2.0	25A			150A	Si	M950aq
109	P70H	7.0k	2.0	55A	140			Si	M267
110	KHP7	7.0k	2.75	25A	300		175A	Si△	M239y
111	SODSLD7	7.0k	2.75	30A	290		140A	Si△	M239y
112	TPF70	7.0k*	3.0	25A				Si	M950aq
113	TPH70	7.0k*	3.0	25A				Si	M950aq
114	2ASPF70	7.0k*	3.6	25A			150A	Si	M950aq
115	2ATPF70	7.0k*	5.4	25A				Si	M950aq
116	2ATPH70	7.0k*	5.4	25A				Si	M950aq
117	SODSPC7	7.0k	5.5	25A	300	8.3m	175A	Si	M950s*
118	SODSPF70	7.0k*	5.5	25A				Si	M950aq
119	SPS70	7.0k*	6.0	25A				Si	M950aq
120	SODTPF70	7.0k*	8.2	25				Si	M950aq
121	SODTPH70	7.0k*	8.2	25A				Si	M950aq
122	2ASPS70	7.0k*	10.8	25A				Si	M950aq
123	SODSPS70	7.0k*	16.5	25A				Si	M950aq
124	1N1144	7.2k	.05	75	3.5	5.0m	170	Si	F57f
125	1N1145	7.2k	.06	75	3.5	5.0m	170	Si	F57f
126	1N3151	7.2k	.10	100A	2.0		150A	Si	A1nf
127	SLD7.2T	7.2k	200m	50A	30	8.0m	150A	Si	F57f
128	SLD7.2TS	7.2k	200m	50A	30	8.0m	150A	Si	F57f
129	1N1757	7.2k	.29	75C	6.0		150	Si	F12u
130	1N1758	7.2k	.33	75C	6.0		150	Si	F12u
131	SKV1/2B3000/2700-1.2								
		7.2k	.80	45A	50	10m	150J	Si	M903
132	2L75	7.5k	.02	25	10	8.3m	175	Si	A1mf
133	5L75	7.5k	.05	25	10	8.3m	175	Si	A1mf
134	HVHF7500	7.5k	50m	55	60	8.3m	150	Si	A138f
135	MC5606	7.5k	60m	100	4.0			Si	A60w
136	1N3762	7.5k	.065	70	15		150A	Si	A1nj
137	10L75	7.5k	.10	25	20	8.3m	175	Si	A1mf
138	HS75	7.5k	100m	50	4.0	8.3m	175	Si	A298ad
139	1N5183	7.5k	.10	55A	4.0 §	8.3m	175A	Si	A1fj
140	15L75	7.5k	.15	25	20	8.3m	175	Si	A1mf
141	HVC750	7.5k	.15	55A	4.5		150	Si	M291g
142	SCFM7.5K	7.5k	150m	55A	25		175J	Si	A440
143	SCHM7.5K	7.5k	150m	55A	25		175J	Si	A440
144	20L75	7.5k	.20	25	20	8.3m	175	Si	A1mf
145	BYX90	7.5k	200m	50	25	10m	125J	Si	A283a▼
146	25L75	7.5k	.25	25	20	8.3m	175	Si	A1mf
147	67D075H55FNN	7.5k	250m	50A	35		150A	Si	F12aj
148	423SD14AH1	7.5k	0.25	50A	50		150A	Si	M1233
149	30L75	7.5k	.30	25	40	8.3m	175	Si	A1mf
150	67D075H20TTS	7.5k	350m	50A	50		140A	Si	M101h
151	424MH13AS1	7.5k	350m	55A	35		110J	Si	A443b
152	40L75	7.5k	.40	25	40	8.3m	175	Si	A1mf
153	SDH7.5K	7.5k	400m	55A	25		175J	Si	M978
154	SDHD7.5K	7.5k	400m	55A	25		175J	Si	M978
155	USS7.5	7.5k	.45	25A	25	8.3m	150	Si	S543
156	424MD13AE1	7.5k	450m	55C	35		110A	Si	M978†Ø
157	424MH13AE1	7.5k	450m	55C	35		110A	Si	M978†Ø
158	50L75	7.5k	.50	25	40	8.3m	175	Si	A1mf
159	423PB10AH1	7.5k	0.50	50A	50		150A	Si	M1233
160	423PH8AS1	7.5k	500m	55A	50		125J	Si	A443e
161	F927-21G	7.5k	500m	55A	50	8.3m	175	Si	A394a
162	KVF7.5	7.5k	500m	55A	50		175A	Si△	A83az
163	SP75F	7.5k	500m	55A	40		150A	Si	A443b
164	SP75S	7.5k	500m	55A	40		150A	Si	A443a
165	SSCH7500	7.5k	500m	55A	50		150	Si	A449a
166	USB7.5	7.5k	.53	25C	80	8.3m	150	Si	S543
167	60L75	7.5k	.60	25	40	8.3m	175	Si	A1mf
168	423NH10AE1	7.5k	600m	55C	50		125A	Si	M978†Ø
169	423PD8AE1	7.5k	600m	55C	50		125A	Si	M978†Ø
170	423SC14AH1	7.5k	0.75	50A	50		150A	Si	M1233
171	423SH14AH1	7.5k	0.75	50A	50		150A	Si	M1233
172	524MH13AS1	7.5k	750m	55A	100		110J	Si	A440b
173	80L75	7.5k	.80	25	60	8.3m	175	Si	A1mf
174	SDHN7.5K	7.5k	800m	55A	25		175J	Si	M978
175	SDHP7.5K	7.5k	800m	55A	25		175J	Si	M978
176	524MH13AE1	7.5k	.85	55C	100		110A	Si	M978†Ø
177	1N5596	7.5k	870m	100C	30		150C	Si	S221
178	424MC13AE1	7.5k	900m	55C	35		110A	Si	M978†Ø
179	HC7500F	7.5k	900m	75C	50			Si	M1273
180	1N5601	7.5k	920m	100C	100		150C	Si	S221
181	100L75	7.5k	1.0	25	60	8.3m	175	Si	A1mf
182	SDHF7.5KM	7.5k	1.0	55A	50		175J	Si	M978
183	SM75	7.5k	1.0	55	14	8.0m	150	Si	A344d
184	HD7500F	7.5k	1.0	75C	50			Si	M1273
185	523MH13AS1	7.5k	1.1	55A	125		125J	Si	A440b
186	423PC8AE1	7.5k	1.2	55C	500		125A	Si	M978†Ø
187	523ND10AE1	7.5k	1.2	55C	125		125A	Si	M978†Ø
188	523NH10AE1	7.5k	1.2	55C	125		125A	Si	M978†ØØ
189	1N4869	7.5k	1.25	40A	150 §		125A	Si	M326c
190	67C075H20LSS	7.5k	1.25	50A	90		140A	Si	M101j
191	J650-13	7.5k	1.25	75C	30			Si	S507
192	HC7500S	7.5k	1.3	75C	150			Si	M1273
193	J650-11	7.5k	1.33	75C	100			Si	S507
194	HD7500S	7.5k	1.5	75C	100			Si	M1273
195	FP75F	7.5k	2.2	55A	200		150A	Si	A440b
196	FP75S	7.5k	2.2	55A	200		150A	Si	A440b
197	HVHS7500	7.5k	2.2	55A	200	8.3m	150A	Si	A138y
198	1N5604	7.5k	2.3	100C	200		150C	Si	S293
199	523NC10AE1	7.5k	2.4	55C	125		125A	Si	M978†Ø
200	J650-7	7.5k	3.0	75C	100			Si	S508
201	UGB7.5	7.5k	3.0	75C	100	8.3m	150	Si	S293
202	J650-5	7.5k	3.3	75C	200			Si	S508
203	J650-4	7.5k	4.5	75C	200			Si	S507
204	HRSCF7500	7.5k	5.0	25	10			Si	A138
205	HRSCH7500	7.5k	5.0	55	50			Si	A138f
206	SCH7500	7.5k	5.0	55A	50		175	Si	A138f
207	SKHM7	7.5k	6.4	49C	144	10m	130J	Si	M976
208	SCHS7500	7.5k	20.0	55	150		175A	Si	A138y
209	HRSCHS7500	7.5k	20	150	150			Si	A138w
210	HVE75	7.5k	100	50	4.0	8.3m	175A	Si	A298s
211	PR258-RT	8.0k	2.0m					Se	A397
212	HV-08SS	8.0k	2.0m	100C	500m	10m	110J	Si△	A3af
213	ESJA25-08	8.0k	5.0m		500m		100C	Si	A428b
214	LHC5-8	8.0k	5.0m	50	3.0	8.3m	150	Si	A1td
215	HVRG80	8.0k	10m	25	20	1.0m	125A	Si	A1uz
216♦	HS6	8k	10m	45A	1.5 §	10m	110J	Si	A298ad
217	LFD8	8.0k	.01	50	.75		150A	Si	A1hx
218	LHC10-8	8.0k	10m	50	3.0	8.3m	150	Si	A1td
219	SL8	8.0k	10m	55A	3.0	8.3m	150A	Si	A267

SYMBOLS AND CODES EXPLAINED IN INTERPRETER

11. RECTIFIERS, HIGH VOLTAGE - PIV ≥ 5 kV (Cont'd)

IN ORDER OF: (1) PIV (2) IO MAX (3) @ TEMP & (4) TYPE NUMBER

LINE No.	4 TYPE NUMBER	1 PIV (V)	MAX AVG FWD DC CURRENT 2 Io MAX (A)	3 @ TEMP (°C)	MAX RATING SURGE CURR PEAK 1 Cy (A)	PULSE WIDTH (s)	MAX. TEMP (°C)	MAT	DRAWING NO.
1	HV80EN	8.0k	12m	100A			150A	Si	A1fe
2	HV80TN	8.0k	12m	100A			150A	Si	A1xf
3	2L80	8.0k	.02	25	10	8.3m	175	Si	A1mf
4	MC207	8.0k	.02	25	.75	8.0m		Si	A1hy
5	SP8	8.0k	20m	25	3.0	8.3m	150A	Si	A267e
6	MC1082	8.0k	.025	25				Si	A1kd
7	MC1082A	8.0k	.025	25				Si	A1kd
8	LHC25-8	8.0k	25m	50	3.0	8.3m	150	Si	A1td
9	M80F	8.0k	25m	55A	2.0		150A	Si	A1abd
10	M80S	8.0k	25m	55A	2.0		150A	Si	A1abd
11	M80UF	8.0k	25m	55A	2.0		150A	Si	A1abd
12	HV80EL	8.0k	25m	100A			150A	Si	A1xe
13	HV80KL	8.0k	25m	100A			150A	Si	A1fe
14	HV80ML	8.0k	25m	100A			150A	Si	A1xd
15	MC1081	8.0k	.035	25				Si	A1gr
16	MC1081A	8.0k	.035	25				Si	A1gr
17	MC206	8.0k	.04	25	1.2k	8.0m		Si	A1hy
18	1N1146	8.0k	.045	75	3.5	5.0m	170	Si	F57g
19	5L80	8.0k	.05	25	10	8.3m	175	Si	A1mf
20	MC081	8.0k	.05	25A			150A	Si	M54c
21	MC081A	8.0k	.05	25A			150A	Si	M54c
22	MC082	8.0k	.05	25A			150A	Si	M54m
23	MC082A	8.0k	.05	25A			150A	Si	M54m
24	PS2428	8.0k	.05	25A				Si	A1je
25	B587-80	8.0k	50m	55	4.0			Si△	A69r
26	SM8	8.0k	50m	55A	4.0	8.3m	150S	Si	A344x
27	1N2384	8.0k	.07	25A	6.0	8.0m	150A	Si	A1kv
28	PS1147	8.0k	.07	25A	2.5 §	8.0m	175A	Si	A1kv
29	HV108	8.0k	100m		10			Si	A83cr
30	10L80	8.0k	.10	25	20	8.3m	175	Si	A1mf
31	BCD08	8.0k	100m	25A	10		125A	Si	A1ja
32	ED8N1	8.0k	100m	50A	45	10m	125J	Si	A359
33	HP8	8.0k	100m	85	25	8.0m		Si	A344o
34	H463	8.0k	110m	55C	20		125A	Si△	A1um
35	B588-80	8.0k	125m	55	25			Si△	A69s
36	15L80	8.0k	.15	25	20	8.3m	175	Si	A1mf
37	20L80	8.0k	.20	25	20	8.3m	175	Si	A1mf
38	425NH14AB1	8.0k	200m	50A	50		150A	Si	A69an
39	SLD8T	8.0k	200m	50A	30	8.0m	150A	Si	F57g
40	SLD8V	8.0k	200m	50A	30	8.0m	150A	Si	Alms
41	CP132	8.0k	.20	75				Si	M84av
42	CP133	8.0k	.20	75				Si	M84aw
43	HV208	8.0k	250m		20			Si	A83cu
44	05RM80	8.0k	.25	25A	2.0	1	150J	Si	A83bn
45	25L80	8.0k	.25	25	20	8.3m	175	Si	A1mf
46	M80K	8.0k	.25	25A	2.0	1	150A	Si△	A83bn
47	NTD08	8.0k	.25	25A	10		125A	Si△	A1jj
48	US80A	8.0k	250m	25A	20	8.3m	150	Si	A83db
49	67D080H53PNN	8.0k	250m	50A	35		150A	Si	A1yy
50	1N1759	8.0k	.25	75C	6.0		150	Si	F12u
51 ♠	D0.25S8	8.0k	270m	25A	§	10m	125J	Si	A433
52	1N2384A	8.0k	275m	25A	9.0	8.0m	200A	Si	A1gd
53	30L80	8.0k	.30	25	40	8.3m	175	Si	A1mf
54	PS1448	8.0k	.30	25A			175A	Si	F13c
55	SLDHV8	8.0k	.30	25A	22		175A	Si	M239e
56	HV880	8.0k	300m	50	50	8.0m	175S	Si	M212k
57	HV-8	8.0k	350m	25A	50		135A	Si	M1258
58	HVR5	8.0k	350m	25A	30		100J	Si	M818
59	HVPR12-08	8k	350m	50A	50		125S	Si	
60	HVPR15-08	8k	350m	50A	50		125S	Si	
61	HVR-3B	8.0k	350m	50	30	10m	110	Si△	M944
62	40L80	8.0k	.40	25	40	8.3m	175	Si	A1mf
63	PS2358	8.0k	.40	25A			175A	Si	M22
64	HSKE3500/1550-.3								
		8.0k	400m	45A	50	10m	150J	Si	A167f
65	SX80	8.0k	400m	50	25	8.3m	150	Si	A344b
66	SXS80	8.0k	400m	50	25	8.3m	150	Si	A344b
67	Z80UF	8.0k	400m	55A	25		150A	Si	A1abc
68	50MV80	8.0k	400m	73H	50	8.3m	150J	Si	M1202
69	1RM80	8.0k	.50	25A	12	10m	150A	Si	M62g
70	50L80	8.0k	.50	25	40	8.3m	175	Si	A1mf
71	D80H	8.0k	.50	25A	30	10m	100A	Si△	M62
72	HC-8	8.0k	500m	25A	250		135A	Si	M919
73	Z80F	8.0k	500m	55A	25		150A	Si	A1abc
74	60L80	8.0k	.60	25	40	8.3m	175	Si	A1mf
75	SPCHV8	8.0k	600m	25A	23	8.3m	175A	Si	M950f*
76	SPFHV80	8.0k*	600m	25A			150A	Si	M950ar
77	Z80S	8.0k	600m	55A	25		150A	Si	A1abc
78	HSKE3500/1550-.5								
		8.0k	650m	45A	50	10m	150J	Si	S450
79	HC8	8.0k	750m	50C	50	8.0m	175C	Si	M919
80	HVPR10-08	8k	750m	50C	250		125S	Si	
81	80L80	8.0k	.80	25	60	8.3m	175	Si	A1mf
82	TPFHV80	8.0k*	900m	25A				Si	M950ar
83	TPHHV80	8.0k*	900m	25A				Si	M950ar
84	SC80	8.0k	1.0		50			Si	M462
85	SC80F	8.0k	1.0		35			Si	M462
86	100L80	8.0k	1.0	25	60	8.3m	175	Si	A1mf
87	F80H	8.0k	1.0	25A	70	10m	100A	Si△	M62
88	SLD8	8.0k	1.0	30A	50		125A	Si△	
89	VC80	8.0k	1.0	40C	50	8.3m	125A	Si△	M430
90	KV08	8.0k	1.0	50A	50		150A	Si	M462
91	KVP8	8.0k	1.0	50A	50		150A	Si△	M239e
92	HSKE3500/1550-1.2								
		8.0k	1.5	45A	120	10m	150J	Si	S450f
93	KX80	8.0k	1.5	50	100	8.3m	150	Si	A344a
94	KXS80	8.0k	1.5	50	100	8.3m	150	Si	A344a
95	6RM80	8.0k	1.5	55A	150	10m	125A	Si	M62e
96	2ASLD8	8.0k	1.8	25A	200		175A	Si	M239e
97	2ASPC8	8.0k	1.8	25A	200	8.3m	100	Si	M950f*
98	SPSHV80	8.0k*	1.8	25A				Si	M950ar
99	SPC8	8.0k	2.0	25A	50	8.3m	175A	Si	M950f*
100	SPF80	8.0k*	2.0	25A			150A	Si	M950ar
101	P80H	8.0k	2.0	55A	230	10m	125A	Si△	M267
102	S1KW8C1	8.0k	2.0	55A	150		175J	Si	M894
103	TPF80	8.0k*	2.7	25A				Si	M950ar
104	TPH80	8.0k*	2.7	25A				Si	M950ar
105	KHP8	8.0k	2.75	25A	300		175A	Si△	M239z
106	SODSLD8	8.0k	2.75	30A	290		140A	Si△	M239z
107	HSKE3500/1550-2								
		8.0k	2.9	45A	240	10m	150J	Si	S450j
108	2ASPF80	8.0k*	3.6	25A			150A	Si	M950ar
109	UGE1112AY4	8.0k	4.2	45A	100	10m		Si	M1076
110	2ATPF80	8.0k*	5.4	25A				Si	M950ar
111	2ATPH80	8.0k*	5.4	25A				Si	M950ar
112	SODSPC8	8.0k	5.5	25A	300	8.3m	175A	Si	M950t*
113	SODSPF80	8.0k*	5.5	25A				Si	M950ar
114	10RM80	8.0k	6.0	25A	150	1.0u	150J	Si	M832
115	20RM80	8.0k	6.0	25A	250	1.0u	150J	Si	M832
116	SPS80	8.0k*	6.0	25A				Si	M950ar
117	SODTPF80	8.0k*	8.2	25				Si	M950ar
118	SODTPH80	8.0k*	8.2	25A				Si	M950ar
119	2ASPS80	8.0k*	10.8	25A				Si	M950ar
120	SCFS8000	8.0k	15	55A	150		175J	Si	A440c
121	SODSPS80	8.0k*	16.5	25A				Si	M950ar
122	S1KW8C1D	8.0k	20		100		150	Si	M894
123	S1KW8C1N	8.0k	20		100		150	Si	M894
124	S1KW8C1P	8.0k	20		100		150	Si	M894
125	S2KW8C2D	8.0k	30		200		150	Si	M894
126	S2KW8C2N	8.0k	30		200		150	Si	M894
127	S2KW8C2P	8.0k	30		200		150	Si	M894
128	S2KW8C2	8.0k	30	55A	200		150	Si	M894a
129	S2KW8KA1	8.0k	40	55A	200		150	Si	M894
130	S4KW8C4D	8.0k	60		400		150	Si	M894
131	S4KW8C4N	8.0k	60		400		150	Si	M894
132	S4KW8C4P	8k	60		400		150	Si	M894
133	S4KW10C5N	8.0k	60		400		150	Si	M894
134	S4KW8C4	8.0k	60	55A	400		150	Si	M894c
135	S4KW8KA2	8.0k	60	55A	400		150	Si	M894a
136	HVC840	8.4k	.10	55A	3.0		150	Si	M291h
137	2L85	8.5k	.02	25	10	8.3m	175	Si	A1mp
138	5L85	8.5k	.05	25	10	8.3m	175	Si	A1mp
139	B587-85	8.5k	50m	55	4.0			Si△	A69r
140	10L85	8.5k	.10	25	20	8.3m	175	Si	A1mp
141	B588-85	8.5k	125m	55	25			Si△	A69s
142	15L85	8.5k	.15	25	20	8.3m	175	Si	A1mp
143	20L85	8.5k	.20	25	20	8.3m	175	Si	A1mp
144	25L85	8.5k	.25	25	20	8.3m	175	Si	A1mp
145	30L85	8.5k	.30	25	40	8.3m	175	Si	A1mp
146	40L85	8.5k	.40	25	40	8.3m	175	Si	A1mp
147	50L85	8.5k	.50	25	40	8.3m	175	Si	A1mp
148	60L85	8.5k	.60	25	40	8.3m	175	Si	A1mp
149	80L85	8.5k	.80	25	60	8.3m	175	Si	A1mp
150	100L85	8.5k	1.0	25	60	8.3m	175	Si	A1mp
151	2L90	9.0k	.02	25	10	8.3m	175	Si	A1mp
152	MC208	9.0k	20m	25	750m	8.0m		Si	A1ks
153	MC209	9.0k	.02	25	.75	8.0m		Si	A1ks
154	SP9	9.0k	20m	25	3.0	8.3m	150A	Si	A267e
155	5L90	9.0k	.05	25	10	8.3m	175	Si	A1mp
156	PS2429	9.0k	.05	25A				Si	A1je
157	B587-90	9.0k	50m	55	4.0			Si△	A69r
158	10L90	9.0k	.10	25	20	8.3m	175	Si	A1mp
159	B588-90	9.0k	125m	55	25			Si△	A69s
160	15L90	9.0k	.15	25	20	8.3m	175	Si	A1mp
161	20L90	9.0k	.20	25	20	8.3m	175	Si	A1mp
162	25L90	9.0k	.25	25	20	8.3m	175	Si	A1mp
163	PS1449	9.0k	.25	25A			175A	Si	F13c
164	30L90	9.0k	.30	25	40	8.3m	175	Si	A1mp
165	SLDHV9	9.0k	.30	25A	22		175A	Si	M239e
166	HV890	9.0k	300m	50	50	8.0m	175S	Si	M212l
167	PS2359	9.0k	.35	25A			175A	Si	M22
168	40L90	9.0k	.40	25	40	8.3m	175	Si	A1mp
169	50L90	9.0k	.50	25	40	8.3m	175	Si	A1mp
170	60L90	9.0k	.60	25	40	8.3m	175	Si	A1mp
171	SPCHV9	9.0k	600m	25A	23	8.3m	175A	Si	M950g*
172	SPFHV90	9.0k*	600m	25A			150A	Si	M950as
173	80L90	9.0k	.80	25	60	8.3m	175	Si	A1mp
174	TPFHV90	9.0k*	900m	25A				Si	M950as
175	TPHHV90	9.0k*	900m	25A				Si	M950as
176	100L90	9.0k	1.0	25	60	8.3m	175	Si	A1mp
177	SLD9	9.0k	1.0	30A	50		125A	Si△	
178	KVP9	9.0k	1.0	50A	50		150A	Si△	M239e
179	2ASLD9	9.0k	1.8	25A	200		175A	Si	M239e
180	2ASPC9	9.0k	1.8	25A	200	8.3m	100	Si	M950g*
181	SPSHV90	9.0k*	1.8	25A				Si	M950as
182	SPC9	9.0k	2.0	25A	50	8.3m	175A	Si	M950g*
183	SPF90	9.0k*	2.0	25A			150A	Si	M950as
184	KHP9	9.0k	2.5	25A	300		175A	Si△	
185	SODSLD9	9.0k	2.5	30A	290		140A	Si△	
186	TPF90	9.0k*	2.7	25A				Si	M950as
187	TPH90	9.0k*	2.7	25A				Si	M950as
188	2ASPF90	9.0k*	3.6	25A			150A	Si	M950as
189	SODSPC9	9.0k	5.0	25A	300	8.3m	175A	Si	M950u*
190	SODSPF90	9.0k*	5.0	25A				Si	M950as
191	2ATPF90	9.0k*	5.4	25A				Si	M950as
192	2ATPH90	9.0k*	5.4	25A				Si	M950as
193	SPS90	9.0k*	6.0	25A				Si	M950as
194	SODTPF90	9.0k*	7.5	25				Si	M950as
195	SODTPH90	9.0k*	7.5	25A				Si	M950as
196	2ASPS90	9.0k*	10.8	25A				Si	M950as
197	SODSPS90	9.0k*	15	25A				Si	M950as
198	2L95	9.5k	.02	25	10	8.3m	175	Si	A1qh
199	5L95	9.5k	.05	25	10	8.3m	175	Si	A1ms
200	B587-95	9.5k	50m	55	4.0			Si△	A69r
201	10L95	9.5k	.10	25	20	8.3m	175	Si	A1qh
202	B588-95	9.5k	125m	55	25			Si△	A69s
203	15L95	9.5k	.15	25	20	8.3m	175	Si	A1qh
204	20L95	9.5k	.20	25	20	8.3m	175	Si	A1qh
205	25L95	9.5k	.25	25	20	8.3m	175	Si	A1qh
206	30L95	9.5k	.30	25	40	8.3m	175	Si	A1qh
207	40L95	9.5k	.40	25	40	8.3m	175	Si	A1qh
208	50L95	9.5k	.50	25	40	8.3m	175	Si	A1ms
209	60L95	9.5k	.60	25	40	8.3m	175	Si	A1ms
210	80L95	9.5k	.80	25	60	8.3m	175	Si	A1ms
211	100L95	9.5k	1.0	25	60	8.3m	175	Si	A1ms
212	HVC960	9.6k	.10	55A	3.0		150	Si	M291j

PIV ≥ 10 kV

SYMBOLS AND CODES EXPLAINED IN INTERPRETER

11. RECTIFIERS, HIGH VOLTAGE - PIV ≥ 10 kV (Cont'd)

IN ORDER OF: (1) PIV (2) IO MAX (3) @ TEMP & (4) TYPE NUMBER

LINE No.	4 TYPE NUMBER	1 PIV (V)	MAX AVG FWD DC CURRENT 2 Io MAX (A)	3 @ TEMP (°C)	MAX RATING SURGE CURR PEAK 1 Cy (A)	PULSE WIDTH (s)	MAX. TEMP (°C)	MAT	DRAWING NO.
1	GHV-10SS	10k	2.0m	90	1.0	10m	110	Si△	A94u
2	GHV-10SSN	10k	2.0m	110C	1.0	10m	120J	Si△	A313h
3	ESJA25-10	10k	5.0m		500m		100C	Si	A428c
4	HV2.5-10F	10k	5.0m		3.0			Si	A83cq
5	DHB10	10k	5.0m	25A	1.0		120J	Si	A344ab
6	HV5-10	10k	5.0m	40	3.0	8.0m	150A	Si△	A1td
7	HV5-10F	10k	5.0m	40	3.0	8.0m	125A	Si△	A1td
8	LHC5-10	10k	5.0m	50	3.0	8.3m	150	Si	A1td
9	B412-10-5	10k	5.0m	55	4.0		150	Si	A344e
10	HV100EO	10k	8.0m	100A			150A	Si	A1xe
11	HV100LO	10k	8.0m	100A			150A	Si	A1me
12	CRG100	10k	10m		20	1.0m	125	Si	A1ux
13	HV2.5-10	10k	10m		3.0			Si	A83cq
14	HVRG100	10k	10m	25	20	1.0m	125A	Si	A1uz
15	KLR10	10k	10m	25	5.0		150S	Si	A1jv
16	HV10-10	10k	10m	40	3.0	8.0m	150A	Si△	A1td
17	HV10-10F	10k	10m	40	3.0	8.0m	125A	Si△	A1td
18♦	HS8	10k	10m	45A	1.5 §	10m	110J	Si	A298ad
19	LFD10	10k	10m	50	750m		150A	Si	A1hx
20	LHC10-10	10k	10m	50	3.0	8.3m	150	Si	A1td
21	B412-10-10	10k	10m	55	4.0		150	Si	A344e
22	SL10	10k	10m	55A	3.0	8.3m	150A	Si	A267
23	HV100EN	10k	12m	100A			150A	Si	A1fe
24	HV100TN	10k	12m	100A			125A	Si	A1xf
25	NKV10F	10k	15m	40A	2.0		120J	Si	A334b
26	2L100	10k	20m	25	10	8.3m	175	Si	A1qh
27	KL10	10k	20m	25	5.0		150S	Si	A1jv
28	MC211	10k	20m	25	750m	8.0m		Si	A1ks
29	SP10	10k	20m	100	3.0	8.3m	150A	Si	A344uØ
30	MC1091	10k	25m	25				Si	A1kd
31	MC1091A	10k	25m	25				Si	A1kd
32	MC1095	10k	25m	25				Si	A1mj
33	MC1095A	10k	25m	25				Si	A1mj
34	HV25-10	10k	25m	40	3.0	8.0m	150A	Si△	A1td
35	HV25-10F	10k	25m	40	3.0	8.0m	125A	Si△	A1td
36	VG10	10k	25m	40A	3.0	8.3m	150A	Si△	A298j
37	LHC25-10	10k	25m	50	3.0	8.3m	150	Si	A1td
38	B412-10-25	10k	25m	55	4.0		150	Si	A344e
39	M100S	10k	25m	55A	2.0		150A	Si	A1abd
40	M100UF	10k	25m	55A	2.0		150A	Si	A1abd
41	1N2381	10k	25m	100A	12	8.3m	150A	Si	A1nf
42	HV100EL	10k	25m	100A			150A	Si	A1fe
43	MC210	10k	40m	25	1.2	8.0m		Si	A1ks
44	5L100	10k	50m	25	10	8.3m	175	Si	A1ms
45	MC091	10k	50m	25A			150A	Si	M54e
46	MC091A	10k	50m	25A			150A	Si	M54e
47	MC095	10k	50m	25A	3.0		150A	Si	M54h
48	MC095A	10k	50m	25A	3.0		150A	Si	M54h
49	PS2430	10k	50m	25A				Si	A1je
50	B587-100	10k	50m	55	4.0			Si△	A69r
51	HVH10000	10k	50m	55	60	8.3m	150	Si	A138g
52	SM10#C	10k	50m	55A	4.0	8.3m	150S	Si	A344x
53	MC5607	10k	60m	100	4.0			Si	A60w
54	1N2385	10k	70m	25A	6.0	8.0m	150A	Si	A1mu
55	PS1148	10k	70m	25A	2.5 §	8.0m	175A	Si	A1mu
56	HV110	10k	100m		10			Si	A83cr
57	10L100	10k	100m	25	20	8.3m	175	Si	A1qh
58	BCD10	10k	100m	25A	10		125A	Si	A1ja
59	VF10	10k	100m	40	3.0	8.3m	150	Si	A1aac
60	HS100	10k	100m	50	4.0	8.3m	175	Si	A298ad
61	1N5184	10k	100m	55A	4.0 §	8.3m	175A	Si	A1fj
62	B588-100	10k	100m	55	25			Si△	A69s
63	HVC1000	10k	100m	55A	3.0		150	Si	A168e
64	HP10	10k	100m	85	25	8.0m	125	Si	A344o
65	15L100	10k	150m	25	20	8.3m	175	Si	A1qh
66	CFR10	10k	150m	25	10		100A	Si	F12v
67	425NH17AB1	10k	150m	50A	50		150A	Si	A69ap
68	SCFM10K	10k	150m	55A	25		175J	Si	A440
69	SCHM10K	10k	150m	55A	25		175J	Si	A440
70	1N2385A	10k	200m	25A	9.0	8.0m	200A	Si	A1gd
71	20L100	10k	200m	25	20	8.3m	175	Si	A1qh
72	CF10	10k	200m	25	10		125A	Si	F12v
73	CL10	10k	200m	25	10		150S	Si△	A83cz
74	ME100	10k	200m	25A	2.5	10m	125J	Si	A1wp
75	423ND17AH1	10k	0.20	50A	50		150A	Si	M1233
76	SLD10VS	10k	200m	50A	30	8.0m	150A	Si	Alms
77	HV210	10k	250m		20			Si	A83cs
78	05RM100	10k	250m	25A	2.0	1.0	150J	Si	A83bv
79	25L100	10k	250m	25	20	8.3m	175	Si	A1qh
80	M100K#B	10k	250m	25A	2.0	10m	150J	Si△	A83bv
81	NTD10	10k	250m	25A	10		125A	Si△	A1kh
82	PS1450	10k	250m	25A			175A	Si	F13c
83	US100A	10k	250m	25A	20	8.3m	150	Si	A83db
84	67D100H04TNN	10k	250m	50A	50		140A	Si	M101c
85	67D100H53PNN	10k	250m	50A	35		150A	Si	A1yz
86	67D100H55FNN	10k	250m	50A	35		150A	Si	F12aj
87	SLD10V	10k	250m	50A	30	8.0m	150A	Si	Alnw
88	1N2637	10k	250m	70$			100A	Si	M84g
89	30L100	10k	300m	25	40	8.3m	175	Si	A1qh
90	SLDHV10	10k	300m	25A	22		175A	Si	M239f
91	T10KV	10k	300m	25A			125A	Si	
92	HV8100	10k	300m	50	50	8.0m	175S	Si	M212l
93	PS2360	10k	330m	25A			175A	Si	M22
94	HV-10	10k	350m	25A	50		135A	Si	M1258
95	USS10	10k	.35	25C	25	8.3m	150	Si	S543
96	1N3648	10k	350m	35A	30	8.3m	150A	Si△	F12aw
97	67D100H20TTS	10k	350m	50A	50		140A	Si	M101j
98	HVPR12-10	10k	350m	50A	50		125S	Si	
99	HVPR15-10	10k	350m	50A	50		125S	Si	
100	424MH17AS1	10k	350m	55A	35		110J	Si	A443c
101	40L100	10k	400m	25	40	8.3m	175	Si	A1qh
102	423SH19AH1	10k	0.40	50A	50		150A	Si	M1233
103	SX100#B	10k	400m	50	25	8.3m	150	Si	A344b
104	SXS100	10k	400m	50	25	8.3m	150	Si	A344b
105	Z100UF	10k	400m	55A	25		150A	Si	A1abc
106	HC10000F	10k	400m	75C	35			Si	M1273
107	USB10	10k	.43	25C	80	8.3m	150	Si	S543
108	424MH17AE1	10k	450m	55C	35		110A	Si	M978†Ø
109	1RM100	10k	500m	25A	12	10m	150J	Si	M62g
110	50L100	10k	500m	25	40	8.3m	175	Si	A1ms
111	D100H	10k	500m	25A	30	10m	125J	Si△	M62
112	HC-10	10k	500m	25A	250		135A	Si	M919
113	dc3B28	10k	500m	35A	50		125A	Si	M1193a
114	dc866	10k	500m	35A	50		125A	Si	M1193h
115	423NC17AH1	10k	0.50	50A	50		150A	Si	M1233
116	SWH10	10k	500m	50	45	10m	80	Si	M423a
117	423PH10AS1	10k	500m	55A	50		125J	Si	A443a
118	F927-31G	10k	500m	55A	50	8.3m	175	Si	A394b
119	KVF10	10k	500m	55A	50		175A	Si△	A83bk
120	SHVM10	10k	500m	55	14		150S	Si	S416
121	SP100F	10k	500m	55A	40		150A	Si	A443c
122	SP100S	10k	500m	55A	40		150A	Si	A443b
123	SSCH10000	10k	500m	55A	50		150	Si	A449b
124	Z100F	10k	500m	55A	25		150A	Si	A1abc
125	CP134	10k	500m	75				Si	M84bw
126	HC10000S	10k	500m	75C	35			Si	M1273
127	1N1699	10k	580m	75A	3.5		160A	Si	F12t
128	60L100	10k	600m	25	40	8.3m	175	Si	A1ms
129	SPCHV10	10k	600m	25A	23	8.3m	175A	Si	M950aj*
130	SPFHV100	10k*	600m	25A			150A	Si	M950at
131	423PD10AE1	10k	600m	55C	50		125A	Si	M978†Ø
132	423PH10AE1	10k	600m	55C	50		125A	Si	M978†Ø
133	Z100S	10k	600m	55A	25		150A	Si	A1abc
134	HC10	10k	700m	50C	50	8.0m	175C	Si	M919
135	1N5597	10k	700m	100C	30		150C	Si	S221
136	HVPR10-10	10k	750m	50C	250		125S	Si	
137	524MH17AS1	10k	750m	55A	100		110J	Si	A440c
138	HD10000F	10k	750m	75C	35			Si	M1273
139	80L100	10k	800m	25	60	8.3m	175	Si	A1ms
140	524MH17AE1	10k	.85	55C	100		110A	Si	M978†Ø
141	TPFHV100	10k*	900m	25A				Si	M950at
142	TPHHV100	10k*	900m	25A				Si	M950at
143	100L100	10k	1.0	25	60	8.3m	175	Si	A1ms
144	F100H	10k	1.0	25A	70	10m	100A	Si△	M62
145	SLD10	10k	1.0	30A	50		125A	Si△	M239f
146	dc872	10k	1.0	35A	50		125A	Si	M1193i
147	dc8008	10k	1.0	35A	50		125A	Si	M1193j
148	KV010	10k	1.0	50A	50		150A	Si	M462
149	KVP10	10k	1.0	50A	50		150A	Si△	M239f
150	SDH10KM	10k	1.0	55B	50 §		150J	Si	M978Ø
151	SDHD10KM	10k	1.0	55B	50 §		150J	Si	M978Ø
152	SM100	10k	1.0	55	25	8.0m	175A	Si	A344d
153	1000DS10	10k	1.0	75	50	8.0m	125A	Si	M915*
154	HD10000S	10k	1.0	75C	75			Si	M1273
155	J650-14	10k	1.0	75C	30			Si	S507
156	523MH17AS1	10k	1.1	55A	125		125J	Si	A440c
157	423PC10AE1	10k	1.2	55C	500		125A	Si	M978†Ø
158	523NH13AE1	10k	1.2	55C	125		125A	Si	M978†Ø
159	S5344	10k	1.2	100A			100A	Si	M65
160	S5373	10k	1.2	100A			100A	Si	M65a
161	1N4870	10k	1.25	40A	150 §		125A	Si	M326d
162	67C100H20LSS	10k	1.25	50A	90		140A	Si	M101k
163	S8008	10k	1.25	50C	250	8.3m	150C	Si	M240h
164	CP135	10k	1.25	75				Si	M84ax
165	CP136	10k	1.25	75				Si	M84bx
166	KX100	10k	1.5	50	100	8.3m	150	Si	A344a
167	KXS100	10k	1.5	50	100	8.3m	150	Si	A344a
168	2ASLD10TRA	10k	1.5	55$				Si	M240a
169	2ASLD10TRB	10k	1.5	55$				Si	M240c
170	2ASLD10	10k	1.8	25A	200		175A	Si	M239f
171	2ASPC10	10k	1.8	25A	200	8.3m	100	Si	M950aj*
172	SPSHV100	10k*	1.8	25A				Si	M950at
173	6RM100	10k	2.0	25A	150	10m	150J	Si	A321
174	SPC10	10k	2.0	25A	50	8.3m	175A	Si	M950aj*
175	SPF100	10k*	2.0	25A			150A	Si	M950at
176	S2HVM10	10k	2.0	55	50		150S	Si	S416
177	SCHS10000	10k	2.0	55	150		175A	Si	A138z
178	SDHN10KM	10k	2.0	55A	50		175J	Si	M978
179	SDHP10KM	10k	2.0	55A	50		175J	Si	M978
180	FP100F	10k	2.2	55A	200		150A	Si	A440c
181	FP100S	10k	2.2	55A	200		150A	Si	A440c
182	HVHS10000	10k	2.2	55A	200	8.3m	150A	Si	A138z
183	J650-9	10k	2.3	75C	100			Si	S508
184	UGB10	10k	2.3	75C	100	8.3m	150	Si	S293
185	KHP10	10k	2.5	25A	300		175A	Si△	
186	SODSLD10	10k	2.5	30A	290		140A	Si△	
187	SDH10KS	10k	2.5	55B	150 §		150J	Si	M978Ø
188	SDHD10KS	10k	2.5	55B	150 §		150J	Si	M978Ø
189	TPF100	10k*	2.7	25A				Si	M950at
190	TPH100	10k*	2.7	25A				Si	M950at
191	P100H	10k	3.0	25A	230	10m	100A	Si△	M460
192	S3HVM10	10k	3.0	55	150		150S	Si	S416
193	2ASPF100	10k*	3.6	25A			150A	Si	M950at
194	HRSCF10000	10k	5.0	25	10			Si	A138
195	SODSPC10	10k	5.0	25A	300	8.3m	175A	Si	M950v*
196	SODSPF100	10k*	5.0	25A				Si	M950at
197	HRSCH10000	10k	5.0	55	50			Si	A138f
198	SDHP10KS	10k	5.0	55A	150		175J	Si	M978
199	2ATPF100	10k*	5.4	25A				Si	M950at
200	2ATPH100	10k*	5.4	25A				Si	M950at
201	SCPHN10	10k	5.5	55A	150		175J	Si	M1259a
202	SCPND10	10k	5.5	55A	150		175J	Si	M1259c
203	10RM100	10k	6.0	25A	150	1.0u	150J	Si	M832
204	20RM100	10k	6.0	25A	250	1.0u	150J	Si	M832
205	SPS100	10k*	6.0	25A				Si	M950at
206	SODTPF100	10k*	7.5	25				Si	M950at
207	SODTPH100	10k*	7.5	25A				Si	M950at
208	2ASPS100	10k*	10.8	25A				Si	M950at
209	SCPNN10	10k	11	55A	150		175J	Si	M1259c
210	SCPNP10	10k	11	55A	150		175J	Si	M1259c
211	SODSPS100	10k*	15	25A				Si	M950at
212	HRSCFS10000	10k	15	55	150			Si	A138z
213	HRSCHS10000	10k	20	150	150			Si	A138w
214	S4KW10C5D	10k	60		400		150	Si	M894
215	S4KW10C5P	10k	60		400		150	Si	M894
216	S4KW10C5	10k	60	55A	400		150	Si	M8949
217	HVE100	10k	100	50	4.0	8.3m	175A	Si	A298s
218	HVT-15SS	11k	2.0m	85A	1.0	10m	100J	Si△	A171b
219	BY510	11k	4.0m				120J	Si	A109h
220	MC213	11k	15m	25	750m	8.0m		Si	A1ks

SYMBOLS AND CODES EXPLAINED IN INTERPRETER

11. RECTIFIERS, HIGH VOLTAGE - PIV ≥ 10 kV (Cont'd)

IN ORDER OF: (1) PIV (2) IO MAX (3) @ TEMP & (4) TYPE NUMBER

LINE No.	4 TYPE NUMBER	1 PIV (V)	MAX AVG FWD DC CURRENT 2 Io MAX (A)	3 @ TEMP (°C)	MAX RATING SURGE CURR PEAK 1 Cy (A)	PULSE WIDTH (s)	MAX. TEMP (°C)	MAT	DRAWING NO.
1	2L110	11k	20m	25	10	8.3m	175	Si	A1nd
2	SP11	11k	20m	25	3.0	8.3m	150A	Si	A267e
3	MC212	11k	35m	25	1.2	8.0m		Si	A1ks
4	5L110	11k	50m	25	10	8.3m	175	Si	A1nd
5	B587-110	11k	50m	55	4.0			Si△	A69r
6	10L110	11k	100m	25	20	8.3m	175	Si	A1nd
7	B588-110	11k	100m	55	25			Si△	A69s
8	15L110	11k	150m	25	20	8.3m	175	Si	A1nd
9	20L110	11k	200m	25	20	8.3m	175	Si	A1nd
10♦	D0.24S10	11k	235m	35A	§	10m	125J	Si	A433
11	25L110	11k	250m	25	20	8.3m	175	Si	A1nd
12	PS1451	11k	250m	25A			175A	Si	F13d
13	30L110	11k	300m	25	40	8.3m	175	Si	A1nd
14	40L110	11k	400m	25	40	8.3m	175	Si	A1nd
15	50L110	11k	500m	25	40	8.3m	175	Si	A1nd
16	60L110	11k	600m	25	40	8.3m	175	Si	A1nd
17	CP137	11k	750m	50				Si	M84ay
18	80L110	11k	800m	25	60	8.3m	175	Si	A1nd
19	SLD11	11k	900m	25A	50		125A	Si△	
20	100L110	11k	1.0	25	60	8.3m	175	Si	A1nd
21	SODSLD11	11k	2.5	25A	290		140A	Si△	
22	PR259-RT	12k	300u					Se	A397a
23	GHV-12SS	12k	1.0m	90A	1.0	10m	110J	Si△	A94u
24	GHV-12SSN	12k	2.0m	110C	1.0	10m	120J	Si△	A313h
25	ESJA25-12	12k	5.0m		500m		100C	Si	A428d
26	HTV125S	12k	5.0m				150S	Si	A1xe
27	HV2.5-12F	12k	5.0m		3.0			Si	A83cq
28	DHB12	12k	5.0m	25A	1.0		120J	Si	A344ab
29	HV5-12	12k	5.0m	40	3.0	8.0m	150A	Si△	A1td
30	HV5-12F	12k	5.0m	40	3.0	8.0m	125A	Si△	A1td
31	LHC5-12	12k	5.0m	50	3.0	8.3m	150	Si	A1td
32	B412-12-5	12k	5.0m	55	4.0		150	Si	A344e
33	HV120EO	12k	8.0m	100A			150A	Si	A1xe
34	HV120LO	12k	8.0m	100A			150A	Si	A1me
35	HV2.5-12	12k	10m		3.0			Si	A83cq
36	HV10-12	12k	10m	40	3.0	8.0m	150A	Si△	A1td
37	HV10-12F	12k	10m	40	3.0	8.0m	125A	Si△	A1td
38	VG12	12k	10m	40A	3.0	8.3m	150A	Si△	A298j
39	LHC10-12	12k	10m	50	3.0	8.3m	150	Si	A1td
40	B412-12-10	12k	10m	55	4.0		150	Si	A344e
41	NKV12F	12k	12m	40A	2.0		120J	Si	A334b
42	HV120TN	12k	12m	100A			150A	Si	A1xf
43	MC215	12k	15m	25	750m	8.0m		Si	A1ks
44	MC1092A	12k	15m	25				Si	A1kd
45	MC1096	12k	15m	25				Si	A1kd
46	MC1096A	12k	15m	25				Si	A1kd
47	HVT-22	12k	15m	60A	3.0	10m	100J	Si	A292
48	2L120	12k	20m	25	10	8.3m	175	Si	A1nh
49	SP12	12k	20m	25	3.0	8.3m	150A	Si	A267e
50	HA120EL	12k	20m	55A			125A	Si	A1xe
51	HA120KL	12k	20m	55A			125A	Si	A1fe
52	HA120TL	12k	20m	55A			125A	Si	A1xf
53	MC1092	12k	25m	25				Si	A1kd
54	HV25-12	12k	25m	40	3.0	8.0m	150A	Si△	A1td
55	HV25-12F	12k	25m	40	3.0	8.0m	125A	Si△	A1td
56	LHC25-12	12k	25m	50	3.0	8.3m	150	Si	A1td
57	B412-12-25	12k	25m	55	4.0		150	Si	A344e
58	MC214	12k	35m	25	1.2	8.0m		Si	A1ks
59	1N1147	12k	45m	75	3.5	5.0m	170	Si	F57g
60	5L120	12k	50m	25	10	8.3m	175	Si	A1nh
61	MC092	12k	50m	25A	3.0		150A	Si	M54g
62	MC092A	12k	50m	25A	3.0		150A	Si	M54g
63	MC096	12k	50m	25A	3.0		150A	Si	M54j
64	MC096A	12k	50m	25A	3.0		150A	Si	M54j
65	B587-120	12k	50m	55	4.0			Si△	A69r
66	HVH12500	12k	50m	55	60	8.3m	150	Si	A138h
67	HVHF12500	12k	50m	55	60	8.3m	150	Si	A138h
68	HVC1200	12k	75m	55A	2.2		150	Si	A168f
69	HV112	12k	100m		10			Si	A83cs
70	1N3052	12k	100m	25A	8.0		165A	Si	A1qr
71	10L120	12k	100m	25	20	8.3m	175	Si	A1nh
72	VF12	12k	100m	40	3.0	8.3m	150	Si	A1aac
73	B588-120	12k	100m	55	25			Si△	A69s
74	425SH23AB1	12k	125m	50A	50		150A	Si	A69ar
75	SLD12U	12k	125m	100A	20	8.0m	150A	Si	Alqr
76	15L120	12k	150m	25	20	8.3m	175	Si	A1nh
77	SCFM12.5K	12k	150m	55A	25		175J	Si	A440
78	SCHM12.5K	12k	150m	55A	25		175J	Si	A440
79	HVS-17	12k	150m	60	20	10m	100	Si△	A337
80	20L120	12k	200m	25	20	8.3m	175	Si	A1nh
81	ME120	12k	200m	25A	2.5	10m	125J	Si	A1wp
82	NTD12	12k	200m	25A	10		125A	Si△	A1kw
83	US120A	12k	200m	25A	20	8.3m	150	Si	A83db
84	SLD12T	12k	200m	50A	30	8.0m	150A	Si	F57g
85	PS1452	12k	230m	25A			175A	Si	F13d
86	HV212	12k	250m		20			Si	A83cv
87	05RM120	12k	250m	25A	2.0	1.0	150J	Si	A83bv
88	25L120	12k	250m	25	20	8.3m	175	Si	A1nh
89	M120K	12k	250m	25A	2.0	1.0	150A	Si△	A83bv
90	67D120H04TNN	12k	250m	50A	50		140A	Si	M101c
91	67D120H53PNN	12k	250m	50A	35		150A	Si	A1za
92	67D120H55FNN	12k	250m	50A	35		150A	Si	F12aj
93	423SH24AH1	12k	0.25	50A	50		150A	Si	M1233
94	1N1760	12k	250m	75C	6.0		150	Si	F12u
95	30L120	12k	300m	25	40	8.3m	175	Si	A1nh
96	HV-12	12k	350m	25A	50		135A	Si	M1258
97	HSKE5000/2200-.25								
		12k	350m	45A	50	10m	150J	Si	A167g
98	67D120H20TTS	12k	350m	50A	50		140A	Si	M101k
99	HVPR12-12	12k	350m	50A	50		125S	Si	
100	HVPR15-12	12k	350m	50A	50		125S	Si	
101	424MH21AS1	12k	350m	55A	35		110J	Si	A443d
102	40L120	12k	400m	25	40	8.3m	175	Si	A1nh
103	424MH21AE1	12k	450m	55C	35		110A	Si	M978†Ø
104	1RM120	12k	500m	25A	12	10m	150J	Si	M62g
105	50L120	12k	500m	25	40	8.3m	175	Si	A1nh
106	HC-12	12k	500m	25A	250		135A	Si	M919
107	423PH13AS1	12k	500m	55A	50		125J	Si	A443f
108	F927-41G	12k	500m	55A	50	8.3m	175	Si	A394c
109	KVF12.5	12k	500m	55A	50		175A	Si△	A83bp
110	SCH12500	12k	500m	55A	50		175	Si	A138h
111	SP125F	12k	500m	55A	40		150A	Si	A443d
112	SP125S	12k	500m	55A	40		150A	Si	A443c
113	SSCH12500	12k	500m	55A	50		150	Si	A449c
114	1N1700	12k	500m	75A	3.5		160A	Si	F12t
115	60L120	12k	600m	25	40	8.3m	175	Si	A1nh
116	HSKE5000/2200-.5								
		12k	600m	45A	50	10m	150J	Si	S450a
117	423NH16AE1	12k	600m	55C	50		125A	Si	M978†Ø
118	423PD13AE1	12k	600m	55C	50		125A	Si	M978†Ø
119	HC12	12k	650m	50C	50	8.0m	175C	Si	M919
120	HVPR10-12	12k	750m	50C	250		125S	Si	
121	524MH21AS1	12k	750m	55A	100		110J	Si	A440d
122	80L120	12k	800m	25	60	8.3m	175	Si	A1nh
123	524MH21AE1	12k	.85	55C	100		110A	Si	M978†Ø
124	SLD12	12k	900m	25A	50		125A	Si△	
125	100L120	12k	1.0	25	60	8.3m	175	Si	A1pm
126	SCKV12K30	12k	1.0	25A	50		175J	Si	M1268
127	SCKV12K40	12k	1.0	25A	150		175J	Si	M1268
128	KV012	12k	1.0	50A	50		150A	Si	M462
129	MD12H10	12k	1.0	50C	70	10m	100J	Si	S556
130	MD12N10	12k	1.0	50C	70	10m	120J	Si	S556
131	MD-12H10	12k	1.0	50C	70	10m	100J	Si	
132	MD-12N10	12k	1.0	50C	70	10m	120J	Si	
133	MR1200#B	12k	1.0	100	50	8.0m	150S	Si	A1dk
134	523MH21AS1	12k	1.1	55A	125		125J	Si	A440d
135	423PC13AE1	12k	1.2	55C	500		125A	Si	M978†Ø
136	523NH16AE1	12k	1.2	55C	125		125A	Si	M978†Ø
137	1N4871	12k	1.25	40A	150 §		125A	Si	M326d
138	67C120H20LSS	12k	1.25	50A	90		140A	Si	M101k
139	HSKE5000/2200-1.2								
		12k	1.45	45A	120	10m	150J	Si	S450g
140	6RM120	12k	2.0	25A	150	10m	150J	Si	A321
141	SCFS12000	12k	2.0	55A	150		175J	Si	A440d
142	FP125F	12k	2.2	55A	200		150A	Si	A440d
143	FP125S	12k	2.2	55A	200		150A	Si	A440d
144	HVHS12500	12k	2.2	55A	200	8.3m	150A	Si	A138u
145	SODSLD12	12k	2.5	25A	290		140A	Si△	
146	10RM120	12k	6.0	25A	150	1.0u	150J	Si	M832
147	20RM120	12k	6.0	25A	250	1.0u	150J	Si	M832
148	HRSCFS12000	12k	15	55	150			Si	A138z
149	S2KW12C3D	12k	30		200		150	Si	M894
150	S2KW12C3N	12k	30		200		150	Si	M894
151	S2KW12C3P	12k	30		200		150	Si	M894
152	S2KW12C3	12k	30	55A	200		150	Si	M894b
153	S4KW12C6D	12k	60		400		150	Si	M894
154	S4KW12C6N	12k	60		400		150	Si	M894
155	S4KW12C6P	12k	60		400		150	Si	M894
156	S4KW12C6	12k	60	55A	400		150	Si	M894e
157	S4KW12KA3	12k	60	55A	400		150	Si	M894b
158	MC217	13k	15m	25	750m	8.0m		Si	A1ks
159	HS10#B	13k	18m	45A	2.0	10m	110J	Si	A298ad
160	2L130	13k	20m	25	10	8.3m	175	Si	A1nq
161	SP13	13k	20m	25	3.0	8.3m	150A	Si	A267e
162	MC216	13k	35m	25	1.2	8.0m		Si	A1ks
163	5L130	13k	50m	25	10	8.3m	175	Si	A1nq
164	B587-130	13k	50m	55	4.0			Si△	A69r
165	10L130	13k	100m	25	20	8.3m	175	Si	A1nq
166	B588-130	13k	100m	55	25			Si△	A69s
167	15L130	13k	150m	25	20	8.3m	175	Si	A1nq
168	20L130	13k	200m	25	20	8.3m	175	Si	A1nq
169	PS1453	13k	230m	25A			175A	Si	F13d
170	25L130	13k	250m	25	20	8.3m	175	Si	A1nq
171	30L130	13k	300m	25	40	8.3m	175	Si	A1nq
172	40L130	13k	400m	25	40	8.3m	175	Si	A1nq
173	50L130	13k	500m	25	40	8.3m	175	Si	A1nq
174	60L130	13k	600m	25	40	8.3m	175	Si	A1nq
175	80L130	13k	800m	25	60	8.3m	175	Si	A1nq
176	100L130	13k	1.0	25	60	8.3m	175	Si	A1nq
177	PR260-RT	14k	300u					Se	A397a
178	GHV-14SS	14k	2.0m	90	1.0	10m	110	Si△	A94u
179	HVT-20SS	14k	2.0m	90	1.0	10m	110	Si△	A171m
180	GHV-14SSN	14k	2.0m	110C	1.0	10m	120J	Si△	A313h
181	DHB14	14k	5.0m	25	1.0		120	Si	Alfd
182	HV140EO	14k	8.0m	100A			150A	Si	A1xe
183	HV140LO	14k	8.0m	100A			150A	Si	A1me
184	MC219	14k	15m	25	750m	8.0m		Si	A1ks
185	MC1093	14k	15m	25				Si	A1kd
186	MC1093A	14k	15m	25				Si	A1kd
187	MC1097	14k	15m	25				Si	A1nm
188	MC1097A	14k	15m	25				Si	A1nm
189	2L140	14k	20m	25	10	8.3m	175	Si	A1nu
190	MC218	14k	35m	25	1.2	8.0m		Si	A1ks
191	5L140	14k	50m	25	10	8.3m	175	Si	A1nu
192	MC093	14k	50m	25A	3.0		150A	Si	M54f
193	MC093A	14k	50m	25A	3.0		150A	Si	M54f
194	MC097	14k	50m	25A	3.0		150A	Si	M54k
195	MC097A	14k	50m	25A	3.0		150A	Si	M54k
196	B587-140	14k	50m	55	4.0			Si△	A69r
197	1N1148	14k	50m	75	3.5	5.0m	170	Si	F57g
198	1N3053	14k	100m	25A	8.0		165A	Si	A1qr
199	10L140	14k	100m	25	20	8.3m	175	Si	A1nu
200	B588-140	14k	100m	55	25			Si△	A69s
201	SLD14U	14k	125m	100A	24	8.0m	150A	Si	Alqr
202	15L140	14k	150m	25	20	8.3m	175	Si	A1nu
203	20L140	14k	200m	25	20	8.3m	175	Si	A1nu
204	NTD14	14k	200m	25A	10		125A	Si△	A1mj
205	PS1454	14k	200m	25A			175A	Si	F13d
206	SLD14T	14k	200m	50A	30	8.0m	150A	Si	F57g
207	25L140	14k	250m	25	20	8.3m	175	Si	A1nu
208	30L140	14k	300m	25	40	8.3m	175	Si	A1nu
209	1N1761	14k	300m	75C	6.0		150	Si	F12u
210	HV-14	14k	350m	25A	50		135A	Si	M1258
211	HVPR12-14	14k	350m	50A	50		125S	Si	
212	HVPR15-14	14k	350m	50A	50		125S	Si	
213	40L140	14k	400m	25	40	8.3m	175	Si	A1nu
214	SKV1/2B6000/5400-0.5								
		14k	.45	45A	50	10m	150J	Si	M903
215	50L140	14k	500m	25	40	8.3m	175	Si	A1nu
216	60L140	14k	600m	25	40	8.3m	175	Si	A1nu

SYMBOLS AND CODES EXPLAINED IN INTERPRETER

11. RECTIFIERS, HIGH VOLTAGE - PIV ≥ 10 kV (Cont'd)

IN ORDER OF: (1) PIV (2) IO MAX (3) @ TEMP & (4) TYPE NUMBER

LINE No.	4 TYPE NUMBER	1 PIV (V)	MAX AVG FWD DC CURRENT 2 Io MAX (A)	3 @ TEMP (°C)	MAX RATING SURGE CURR PEAK 1 Cy (A)	PULSE WIDTH (s)	MAX. TEMP (°C)	MAT	DRAWING NO.
1	HVPR10-14	14k	750m	50C	250		125S	Si	
2	80L140	14k	800m	25	60	8.3m	175	Si	A1nu
3	100L140	14k	1.0	25	60	8.3m	175	Si	A1nu
4	BY176	15k	2.5m	25	250m		95J	Si	A52k
5	HTV150S	15k	5.0m				150S	Si	A1xe
6	HV2.5-15F	15k	5.0m		3.0			Si	A83cq
7	HV5-15	15k	5.0m	40	3.0	8.0m	150A	Si△	A1te
8	HV5-15F	15k	5.0m	40	3.0	8.0m	125A	Si△	A1te
9	LHC5-15	15k	5.0m	50	3.0	8.3m	150	Si	A1te
10	B412-15-5	15k	5.0m	55	4.0		150	Si	A344z
11♦	TV9Si	15k	9.8m	45A	1.5 §	10m	110J	Si	A50g
12	CRG150	15k	10m		20	1.0m	125	Si	A1uy
13	HV2.5-15	15k	10m		3.0			Si	A83cq
14	CAX15	15k	10m	25	2.0	8.3m	90	Si	M982
15	HVRG150	15k	10m	25	20	1.0m	125A	Si	A1va
16	KLR15	15k	10m	25	5.0		150S	Si	A1kz
17	1N5324	15k	10m	40A	.75 §		125A	Si	A1kt
18	HV10-15	15k	10m	40	3.0	8.0m	150A	Si△	A1te
19	HV10-15F	15k	10m	40	3.0	8.0m	125A	Si△	A1te
20	NKV15F	15k	10m	40A	2.0		120J	Si	A334b
21	VG15	15k	10m	40A	3.0	8.3m	150A	Si△	A298j
22	LHC10-15	15k	10m	50	3.0	8.3m	150	Si	A1te
23	B412-15-10	15k	10m	55	4.0		150	Si	A344z
24	SL15	15k	10m	55A	3.0	8.3m	150A	Si	A267a
25	MC221	15k	15m	25	.75	8.0m		Si	A1ks
26	2L150	15k	20m	25	10	8.3m	175	Si	A1pb
27	KL15	15k	20m	25	5.0		150S	Si	A1kz
28	HV25-15	15k	25m	40	3.0	8.0m	150A	Si△	A1te
29	HV25-15F	15k	25m	40	3.0	8.0m	125A	Si△	A1te
30	LHC25-15	15k	25m	50	3.0	8.3m	150	Si	A1te
31	B412-15-25	15k	25m	55	4.0		150	Si	A344z
32	MC220	15k	35m	25	1.2	8.0m		Si	A1ks
33	5L150	15k	50m	25	10	8.3m	175	Si	A1pb
34	PS1132	15k	50m	25	2.0	8.0m	175	Si	A1nh
35	B587-150	15k	50m	55	4.0			Si△	A69r
36	HVH15000	15k	50m	55	60	8.3m	150	Si	A138n
37	HVHF15000	15k	50m	55	60	8.3m	150	Si	A138n
38	HVHJ15K	15k	50m	55A	5.0	8.3m	150	Si	A298ae
39	SM15	15k	50m	55A	4.0	8.3m	150S	Si	A344y
40	CP140	15k	50m	75				Si	M84ba
41	JKV15F	15k	60m	35A	10		125J	Si	
42	HVC1500	15k	75m	55A	2.2	8.3m	150	Si	A168g
43	HV115	15k	100m		10			Si	A83cs
44	10L150	15k	100m	25	20	8.3m	175	Si	A1pb
45	BCD15	15k	100m	25A	10		125A	Si	A1ma
46	JKV15	15k	100m	35A	20		125J	Si	
47	VF15	15k	100m	40	3.0	8.3m	150	Si	A1aad
48	425SH29AB1	15k	100m	50A	50		150A	Si	A69as
49	B588-150	15k	100m	55	25			Si△	A69s
50	15L150	15k	150m	25	20	8.3m	175	Si	A1pb
51	CFR15	15k	150m	25	10		100A	Si	F12w
52	SCFM15K	15k	150m	55A	25		175J	Si	A440
53	SCHM15K	15k	150m	55A	25		175J	Si	A440
54	20L150	15k	200m	25	20	8.3m	175	Si	A1pb
55	CF15	15k	200m	25	10		125A	Si	F12w
56	CL15	15k	200m	25	10		150S	Si△	A1kz
57	PS1455	15k	200m	25A			175A	Si	F13d
58	US150A	15k	200m	25A	20	8.3m	150	Si	A83db
59	423NH26AH1	15k	0.20	50A	50		150A	Si	M1233
60	HV8150	15k	200m	50	50	8.0m	175S	Si	M212m
61	HV215	15k	250m		20			Si	A83ct
62	05RM150	15k	250m	25A	2.0	1.0	150J	Si	A83bv
63	25L150	15k	250m	25	20	8.3m	175	Si	A1pb
64	EV15	15k	250m	25C	30	10m	125J	Si	
65	M150K	15k	250m	25A	2.0	1.0	150A	Si△	A83bv
66	SLDHV15	15k	250m	25A	22		175A	Si	M239q
67	USS15	15k	.25	25C	25	8.3m	150	Si	S543
68	67D150H04TNN	15k	250m	50A	50		140A	Si	M101d
69	67D150H53PNN	15k	250m	50A	35		150A	Si	A1zb
70	67D150H55FNN	15k	250m	50A	35		150A	Si	F12ak
71	S15000GP	15k	.25	55A	15		150	Si	M1313
72	HC15000F	15k	250m	75C	20			Si	M1273
73	30L150	15k	300m	25	40	8.3m	175	Si	A1pb
74	HC15000S	15k	300m	75C	20			Si	M1273
75	HV-15	15k	350m	25A	50		135A	Si	M1258
76	67D150H20TTS	15k	350m	50A	50		140A	Si	M101k
77	40L150	15k	400m	25	40	8.3m	175	Si	A1pb
78	424MH25AE1	15k	450m	55C	35		110A	Si	M978†Ø
79	1N5598	15k	470m	100C	30		150C	Si	S221
80	1RM150	15k	500m	25A	12	10m	150A	Si	M62g
81	50L150	15k	500m	25	40	8.3m	175	Si	A1pb
82	D150H	15k	500m	25A	30	10m	100A	Si△	M62
83	HC-15	15k	500m	25A	250		135A	Si	M919
84	SLD75	15k	500m	25A	50		175A	Si	M239m
85	SPCHV15	15k	500m	25A	23	8.3m	175A	Si	M950e*
86	HC15	15k	500m	50C	50	8.0m	175C	Si	M919
87	423PH15AS1	15k	500m	55A	50		125J	Si	A443b
88	F927-51G	15k	500m	55A	50	8.3m	175	Si	A394d
89	KVF15	15k	500m	55A	50		175A	Si△	A83br
90	SCH15000	15k	500m	55A	50		175	Si	A138n
91	SHVM15	15k	500m	55	14		150S	Si	S416
92	SP150F	15k	500m	55A	40		150A	Si	A443d
93	SP150S	15k	500m	55A	40		150A	Si	A443d
94	SSCH15000	15k	500m	55A	50		150	Si	A449d
95	CP141	15k	500m	75				Si	M84bb
96	CP143	15k	500m	75				Si	M84bd
97	HD15000F	15k	500m	75C	25			Si	M1273
98	60L150	15k	600m	25	40	8.3m	175	Si	A1pb
99	SPFHV150	15k*	600m	25A			150A	Si	M950au
100	SDHD15K	15k	600m	50B	35 §		150J	Si	M978Ø
101	423PD15AE1	15k	600m	55C	50		125A	Si	M978†Ø
102	423PH15AE1	15k	600m	55C	50		125A	Si	M978†Ø
103	J650-15	15k	610m	75C	30			Si	S507
104	HD15000S	15k	670m	75C	30			Si	M1273
105	TPFHV150	15k*	750m	25A				Si	M950au
106	TPHHV150	15k*	750m	25A				Si	M950au
107	524MH25AS1	15k	750m	55A	100		110J	Si	
108	80L150	15k	800m	25	60	8.3m	175	Si	A1pb
109	SDHN15K	15k	800m	55A	25		175J	Si	M978
110	SDHP15K	15k	800m	55A	25		175J	Si	M978
111	SLD15	15k	900m	30A	50		125A	Si△	M239g
112	KVP15	15k	900m	50A	50		150A	Si△	M239g
113	100L150	15k	1.0	25	60	8.3m	175	Si	A1pb
114	F150H	15k	1.0	25A	70	10m	100A	Si△	M62
115	SDH15KM	15k	1.0	55B	50 §		150J	Si	M978Ø
116	SDHD15KM	15k	1.0	55B	50 §		150J	Si	M978Ø
117	MR1500	15k	1.0	100	50	8.0m	150S	Si	A1dk
118	523MH25AS1	15k	1.1	55A	125		125J	Si	A440e
119	dc575	15k	1.2	35A	125		125A	Si	M1193e
120	dc673	15k	1.2	35A	125		125A	Si	M1193g
121	423PC15AE1	15k	1.2	55C	500		125A	Si	M978†Ø
122	523NH20AE1	15k	1.2	55C	125		125A	Si	M978†Ø
123	1N4872	15k	1.25	40A	150 §		125A	Si	M326e
124	67C150H20LSS	15k	1.25	50A	90		140A	Si	M101m
125	2ASLD15	15k	1.5	25A	200		175A	Si	M239g
126	2ASPC15	15k	1.5	25A	200	8.3m	100	Si	M950e*
127	SPSHV150	15k*	1.5	25A				Si	M950au
128	2ASLD15TR	15k	1.5	55$				Si	M240b
129	S5449	15k	1.5	100A			100A	Si	M65b
130	CP138	15k	1.75	50				Si	M84az
131	CP139	15k	1.75	50				Si	M84by
132	ST16	15k	1.75	70	200	8.3m		Si	M84ca
133	SPC15	15k	1.8	25A	50	8.3m	175A	Si	M950e*
134	SPF150	15k*	1.8	25A			150A	Si	M950au
135	6RM150	15k	2.0	25A	150	10m	150J	Si	A321
136	S2HVM15	15k	2.0	55	50		150S	Si	S416
137	SDHN15KM	15k	2.0	55A	50		175J	Si	M978
138	SDHP15KM	15k	2.0	55A	50		175J	Si	M978
139	TPF150	15k*	2.2	25A				Si	M950au
140	TPH150	15k*	2.2	25A				Si	M950au
141	FP150F	15k	2.2	55A	200		150A	Si	A440e
142	FP150S	15k	2.2	55A	200		150A	Si	A440e
143	HVHS15000	15k	2.2	55A	200	8.3m	150A	Si	A138v
144	PMA104X	15k	2.4	50	150	8.3m	150	Si	M1003d
145	KHP15	15k	2.5	25A	300		175A	Si△	
146	SODSLD15	15k	2.5	30A	290		140A	Si△	
147	CP142	15k	2.5	50				Si	M84bc
148	2ASPF150	15k*	3.0	25A			150A	Si	M950au
149	PMA104P	15k	3.0	50	150	8.3m	150	Si	M1003
150	2ATPF150	15k*	4.5	25A				Si	M950au
151	2ATPH150	15k*	4.5	25A				Si	M950au
152	SODSPC15	15k	5.0	25A	300	8.3m	175A	Si	M950q*
153	SODSPF150	15k*	5.0	25A				Si	M950au
154	HRSCH15000	15k	5.0	55	50			Si	A138f
155	SDHN15KS	15k	5.0	55A	150		175J	Si	M978
156	SPS150	15k*	5.4	25A				Si	M950au
157	SCPND15	15k	5.5	55A	150		175J	Si	M1259e
158	10RM150	15k	6.0	25A	150	1.0u	150J	Si	M832
159	20RM150	15k	6.0	25A	250	1.0u	150J	Si	M832
160	SODTPF150	15k*	7.5	25				Si	M950au
161	SODTPH150	15k*	7.5	25A				Si	M950au
162	2ASPS150	15k*	9.0	25A				Si	M950au
163	SCPNN15	15k	11	55A	150		175J	Si	M1259e
164	SCPNP15	15k	11	55A	150		175J	Si	M1259e
165	SODSPS150	15k*	15	25A				Si	M950au
166	SCHS15000	15k	20.0	55	150		175A	Si	A138v
167	SP15	15k	20	100	3.0		150	Si△	A344uØ
168	HRSCHS15000	15k	20	150	150			Si	A138w
169	GHV-16SSN	16k	2.0m	110C	1.0	10m	120J	Si△	A313h
170	ESJA25-16	16k	5.0m		500m		100C	Si	A428e
171	DHA16	16k	5.0m	25A	1.0		120J	Si	A344aa
172	DHB16	16k	5.0m	25	1.0		120	Si	Alfd
173	HV160EP	16k	5.0m	100A			150A	Si	A1xe
174	HV160LP	16k	5.0m	100A			150A	Si	A1me
175	MC223	16k	15m	25	.50	8.0m		Si	A1ks
176	MC1094	16k	15m	25				Si	A1mj
177	MC1094A	16k	15m	25				Si	A1mj
178	MC1098	16k	15m	25				Si	A1nm
179	MC1098A	16k	15m	25				Si	A1nm
180	2L160	16k	20m	25		8.3m	175	Si	A1pg
181	ESJA17-16	16k	25m		500m		120J	Si	A431
182	ESJA18-16	16k	25m		500m		120J	Si	A431a
183	MC222	16k	35m	25	1.0	8.0m		Si	A1ks
184	1N1149	16k	45m	75	3.5	5.0m	170	Si	F57g
185	5L160	16k	50m	25	10	8.3m	175	Si	A1pg
186	MC094	16k	50m	25A	3.0		150A	Si	M54m
187	MC094A	16k	50m	25A	3.0		150A	Si	M54m
188	MC098	16k	50m	25A	3.0		150A	Si	M54l
189	MC098A	16k	50m	25A	3.0		150A	Si	M54l
190	B587-160	16k	50m	55	4.0			Si△	A69r
191	ED-16N1	16k	80m	50A	45	10m	125J	Si	A359
192	1N3054	16k	100m	25A	8.0		165A	Si	A1rg
193	10L160	16k	100m	25	20	8.3m	175	Si	A1pg
194	dc3B29	16k	100m	35A	50		125A	Si	M1193b
195	B588-160	16k	100m	55	25			Si△	A69s
196	CP144	16k	100m	75				Si	M84be
197	SLD16U	16k	125m	100A	27	8.0m	150A	Si	Alrg
198	15L160	16k	150m	25	20	8.3m	175	Si	A1pg
199	20L160	16k	200m	25	20	8.3m	175	Si	A1pg
200	NTD16	16k	200m	25A	10		125A	Si△	A1mv
201	PS1456	16k	200m	25A			175A	Si	F13d
202	SLD16T	16k	200m	50A	30	8.0m	150A	Si	F57g
203	CP145	16k	200m	75				Si	M84bf
204	25L160	16k	250m	25	20	8.3m	175	Si	A1pg
205	1N1762	16k	250m	100C	6.0		150	Si	F12u
206	30L160	16k	300m	25	40	8.3m	175	Si	A1pg
207	HVPR12-16	16k	350m	50A	50		125S	Si	
208	HVPR15-16	16k	350m	50A	50		125S	Si	
209	40L160	16k	400m	25	40	8.3m	175	Si	A1pg
210	50L160	16k	500m	25	40	8.3m	175	Si	A1pg
211	HSKE7500/3300-.4	16k	550m	45A	50	10m	150J	Si	S450b
212	60L160	16k	600m	25	40	8.3m	175	Si	A1pg
213	HVPR10-16	16k	750m	50C	250		125S	Si	
214	80L160	16k	800m	25	60	8.3m	175	Si	A1pg
215	100L160	16k	1.0	25	60	8.3m	175	Si	A1pg
216	HSKE7500/3300-1.2	16k	1.35	45A	120	10m	150J	Si	S450h
217	S1KW16C2	16k	1.5	55A	150		175J	Si	M894a
218	SCPHN16	16k	5.5	55A	150		175J	Si	M1259b

SYMBOLS AND CODES EXPLAINED IN INTERPRETER

11. RECTIFIERS, HIGH VOLTAGE - PIV ≥ 10 kV (Cont'd)

IN ORDER OF: (1) PIV (2) IO MAX (3) @ TEMP & (4) TYPE NUMBER

LINE No.	4 TYPE NUMBER	1 PIV (V)	MAX AVG FWD DC CURRENT 2 Io MAX (A)	3 @ TEMP (°C)	MAX RATING SURGE CURR PEAK 1 Cy (A)	PULSE WIDTH (s)	MAX. TEMP (°C)	MAT	DRAWING NO.
1	S1KW16C2D	16k	15		100		150	Si	M894a
2	S1KW16C2N	16k	15		100		150	Si	M894a
3	S1KW16C2P	16k	15		100		150	Si	M894a
4	S2KW16C4D	16k	30		200		150	Si	M894
5	S2KW16C4N	16k	30		200		150	Si	M894
6	S2KW16C4P	16k	30		200		150	Si	M894
7	S2KW16C4	16k	30	55A	200		150	Si	M894c
8	S2KW16KA2	16k	60	55A	200		150	Si	M894a
9	S4KW16KA4	16k	60	55A	400		150	Si	M894c
10	HVT-25SS	17k	2.0m	100C	1.0	10m	110J	SiΔ	A171n
11♦	HS13#B	17k	4.5m	45A	1.5 §	10m	110J	Si	A298ad
12	MC225	17k	15m	25	500m	8.3m		Si	A1ms
13	2L170	17k	20m	25	10	8.3m	175	Si	A1pm
14	MC224	17k	35m	25	1.0	8.3m		Si	A1ms
15	5L170	17k	50m	25	10	8.3m	175	Si	A1pm
16	B587-170	17k	50m	55	4.0			SiΔ	A69r
17	10L170	17k	100m	25	20	8.3m	175	Si	A1pm
18	B588-170	17k	100m	55	25			SiΔ	A69s
19	15L170	17k	150m	25	20	8.3m	175	Si	A1pm
20	20L170	17k	200m	25	20	8.3m	175	Si	A1pm
21	PS1457	17k	200m	25A			175A	Si	F13d
22	CP146	17k	200m	75				Si	M84bg
23	25L170	17k	250m	25	28	8.3m	175	Si	A1pm
24	30L170	17k	300m	25	40	8.3m	175	Si	A1pm
25	40L170	17k	400m	25	40	8.3m	175	Si	A1pm
26	50L170	17k	500m	25	40	8.3m	175	Si	A1pm
27	60L170	17k	600m	25	40	8.3m	175	Si	A1pm
28	80L170	17k	800m	25	60	8.3m	175	Si	A1pm
29	100L170	17k	1.0	25	60	8.3m	175	Si	A1pm
30	FP175F	17k	2.2	55A	200		150A	Si	A440e
31	FP175S	17k	2.2	55A	200		150A	Si	A440e
32	HVHS17500	17k	2.2	55A	200	8.3m	150A	Si	A138v
33	OSM9510-12	18k			15k			Si	
34	HV2.5-18F	18k	5.0m		3.0			Si	A83cq
35	DHB18	18k	5.0m	25	1.0		120	Si	Alfd
36	HV180EP	18k	5.0m	100A			150A	Si	A1xe
37	HV180LP	18k	5.0m	100A			150A	Si	A1me
38	HV2.5-18	18k	10m		3.0			Si	A83cq
39	HA180LO	18k	10m	55A			125A	Si	A1me
40	MC227	18k	15m	25	500m	8.0m		Si	A1ms
41	HA180EN	18k	15m	55A			125A	Si	A1xe
42	HA180KN	18k	15m	55A			125A	Si	A1fe
43	HA180LN	18k	15m	55A			125A	Si	A1me
44	HA180TN	18k	15m	55A			125A	Si	A1xf
45	HVT-30S	18k	15m	60A	3.0	10m	100J	Si	A292a
46	2L180	18k	20m	25	10	8.3m	175	Si	A1pn
47	MC226	18k	35m	25	1.0	8.0m		Si	A1ms
48	5L180	18k	50m	25	10	8.3m	175	Si	A1pn
49	B587-180	18k	50m	55	4.0			SiΔ	A69r
50	HVC1800	18k	75m	55A	2.2		150	Si	A168h
51	1N3055	18k	100m	25A	8.0		165A	Si	A1rg
52	10L180	18k	100m	25	20	8.3m	175	Si	A1pn
53	B588-180	18k	100m	55	25			SiΔ	A69s
54	SLD18U	18k	125m	100A	30	8.0m	150A	Si	Alrg
55	15L180	18k	150m	25	20	8.3m	175	Si	A1pn
56	US180A	18k	180m	25A	20	8.3m	150	Si	A83dc
57	20L180	18k	200m	25	20	8.3m	175	Si	A1pn
58	NTD18	18k	200m	25A	10		125A	SiΔ	A1nm
59	PS1458	18k	200m	25A			175A	Si	F13d
60	25L180	18k	250m	25	20	8.3m	175	Si	A1pn
61	30L180	18k	300m	25	40	8.3m	175	Si	A1pn
62	40L180	18k	400m	25	40	8.3m	175	Si	A1pn
63	50L180	18k	500m	25	40	8.3m	175	Si	A1pn
64	60L180	18k	600m	25	40	8.3m	175	Si	A1pn
65	80L180	18k	800m	25	60	8.3m	175	Si	A1pn
66	100L180	18k	1.0	25	60	8.3m	175	Si	A1pn
67	SCKV18K30	18k	1.0	25	50	8.3m	150J	Si	S475a
68	SCKV18K40	18k	1.0	25	150	8.3m	150J	Si	S475a
69♦	TV13Si	19k	7.4m	45A	1.5 §	10m	110J	Si	A50g
70	MC229	19k	15m	25	500m	8.0m		Si	A1ms
71	2L190	19k	20m	25	10	8.3m	175	Si	A1pu
72	MC228	19k	35m	25	1.0	8.0m		Si	A1ms
73	5L190	19k	50m	25	10	8.3m	175	Si	A1pu
74	B587-190	19k	50m	55	4.0			SiΔ	A69r
75	10L190	19k	100m	25	20	8.3m	175	Si	A1pu
76	B588-190	19k	100m	55	25			SiΔ	A69s
77	15L190	19k	150m	25	20	8.3m	175	Si	A1pu
78	20L190	19k	200m	25	20	8.3m	175	Si	A1mp
79	PS1459	19k	200m	25A			175A	Si	F13a
80	25L190	19k	250m	25	20	8.3m	175	Si	A1pu
81	CP147	19k	250m	75				Si	M84bh
82	S5367	19k	250m	100A			100A	Si	M66
83	30L190	19k	300m	25	40	8.3m	175	Si	A1pu
84	40L190	19k	400m	25	40	8.3m	175	Si	A1pu
85	50L190	19k	500m	25	40	8.3m	175	Si	A1pu
86	60L190	19k	600m	25	40	8.3m	175	Si	A1pu
87	RE19	19k	650m	100A	30	10m	125J	Si	S544
88	80L190	19k	800m	25	60	8.3m	175	Si	A1pu
89	100L190	19k	1.0	25	60	8.3m	175	Si	A1pu

PIV ≥ 20 kV

LINE No.	4 TYPE NUMBER	1 PIV (V)	MAX AVG FWD DC CURRENT 2 Io MAX (A)	3 @ TEMP (°C)	MAX RATING SURGE CURR PEAK 1 Cy (A)	PULSE WIDTH (s)	MAX. TEMP (°C)	MAT	DRAWING NO.
93	GHV-18SS	20k	2.0m	90	1.0	10m	110	SiΔ	A94u
94	HVT-30SS	20k	2.0m	90	1.0	10m	110	SiΔ	A171n
95	GHV-18SSN	20k	2.0m	110C	1.0	10m	120J	SiΔ	A313h
96	ESJA25-20	20k	5.0m		500m		100C	Si	A428f
97	DHA20	20k	5.0m	25A	1.0		120J	Si	A344aa
98	HV5-20	20k	5.0m	40	3.0	8.0m	150A	SiΔ	A1te
99	HV5-20F	20k	5.0m	40	3.0	8.0m	125A	SiΔ	A1te
100	NKV20F	20k	5.0m	40A	1.0		120J	Si	A334c
101	LHC5-20	20k	5.0m	50	3.0	8.3m	150	Si	A1te
102	B412-20-5	20k	5.0m	55	4.0		150	Si	A344z
103	HV200EP	20k	5.0m	100A			150A	Si	A1xe
104	HV200LP	20k	5.0m	100A			150A	Si	A1me
105	CRG200	20k	10m		20	1.0m	125	Si	A1uy
106	CAX20	20k	10m	25	2.0	8.3m	90	Si	M982
107	HVRG200	20k	10m	25	20	1.0m	125A	Si	A1va
108	KLR20	20k	10m	25	5.0		150S	Si	A1na
109	HV10-20	20k	10m	40	3.0	8.0m	150A	SiΔ	A1te
110	HV10-20F	20k	10m	40	3.0	8.0m	125A	SiΔ	A1te
111	VG20	20k	10m	40A	3.0	8.3m	150A	SiΔ	A298j
112	LHC10-20	20k	10m	50	3.0	8.3m	150	Si	A1te
113	MD22N01	20k	10m	50C	5.0	10m	120J	Si	A404
114	MD-22N01	20k	10m	50A	5.0	10m	120J	Si	A404
115	B412-20-10	20k	10m	55	4.0		150	Si	A344z
116	SL20	20k	10m	55A	3.0	8.3m	150A	Si	A267a
117	MC231	20k	15m	25	500m	8.0m		Si	A1ms
118	2L200	20k	20m	25	10	8.3m	175	Si	A1rn
119	KL20	20k	20m	25	5.0		150S	Si	A1na
120	ESJA18-20	20k	25m		500m		120J	Si	A431a
121	HV25-20	20k	25m	40	3.0	8.0m	150A	SiΔ	A1te
122	HV25-20F	20k	25m	40	3.0	8.0m	125A	SiΔ	A1te
123	LHC25-20	20k	25m	50	3.0	8.3m	150	Si	A1te
124	B412-20-25	20k	25m	55	4.0		150	Si	A344z
125	MC230	20k	35m	25	1.0	8.0m		Si	A1ms
126	1N2139	20k	45m	75A	6.0		170S	Si	F57
127	5L200	20k	50m	25	10	8.3m	175	Si	A1pw
128	B587-200	20k	50m	55	4.0			SiΔ	A69r
129	HVHF20000	20k	50m	55	60	8.3m	150	Si	A138q
130	HVHJ20K	20k	50m	55A	5.0	8.3m	150A	Si	A298af
131	SM20#C	20k	50m	55A	4.0	8.3m	150S	Si	A344y
132	CP148	20k	50m	75				Si	M84bj
133	CP149	20k	50m	75				Si	M84bk
134	CP150	20k	75m	75				Si	M84bm
135	VF20	20k	90m	40	3.0	8.3m	150	Si	A1aad
136	1N3056	20k	100m	25A	8.0		165A	Si	A1rq
137	10L200	20k	100m	25	20	8.3m	175	Si	A1pw
138	BCD20	20k	100m	25A	10		125A	Si	A1nb
139	dc3B24	20k	100m	35A	50		125A	Si	M1193
140	425SH38AB1	20k	100m	50A	50		150A	Si	A69at
141	B588-200	20k	100m	55	25			SiΔ	A69s
142	SLD20U	20k	125m	100A	34	8.0m	150A	Si	Alrq
143	15L200	20k	150m	25	20	8.3m	175	Si	A1pw
144	CFR20	20k	150m	25	10		100A	Si	F12x
145	US200A	20k	180m	25A	20	8.3m	150	Si	A83dc
146	20L200	20k	200m	25	20	8.3m	175	Si	A1pw
147	CF20	20k	200m	25	10		125A	Si	F12x
148	CL20	20k	200m	25	10		150S	SiΔ	A1na
149	ME200	20k	200m	25A	2.5	10m	125J	Si	A1wq
150	NTD20	20k	200m	25A	10		125A	SiΔ	A1nw
151	PS1460	20k	200m	25A			175A	Si	F13d
152	ESJA17-20	20k	250m		500m		120J	Si	A431
153	05RM200	20k	250m	25A	2.0	1.0	150J	Si	A83bv
154	25L200	20k	250m	25	20	8.3m	175	Si	A1pw
155	M200K	20k	250m	25A	2.0	10m	150A	SiΔ	A83k
156	SLDHV20	20k	250m	25A	22		175A	Si	M239h
157	67D200H04TNN	20k	250m	50A	50		140A	Si	M101d
158	67D200H53PNN	20k	250m	50A	35		150A	Si	A1zc
159	67D200H55FNN	20k	250m	50A	35		150A	Si	F12ak
160	30L200	20k	300m	25	40	8.3m	175	Si	A1pw
161	67D200H20TTS	20k	350m	50A	50		140A	Si	M101m
162	40L200	20k	400m	25	40	8.3m	175	Si	A1pw
163	EW20	20k	400m	25C	30	10m	125J	Si	
164	1RM200	20k	500m	25A	12	10m	150J	Si	M62g
165	50L200	20k	500m	25	40	8.3m	175	Si	A1pw
166	D200HL	20k	500m	25A	30	10m	100A	SiΔ	M62
167	SPCHV20	20k	500m	25A	23	8.3m	175A	Si	M950f*
168	SPFHV200	20k*	500m	25A			150A	Si	M950av
169	423PH20AS1	20k	500m	55A	50		125J	Si	A440b
170	F927-61G	20k	500m	55A	50	8.3m	175	Si	A394e
171	KVF20	20k	500m	55A	50		175A	SiΔ	A83bw
172	SCH20000	20k	500m	55A	50		175	Si	A138q
173	SP200F	20k	500m	55A	40		150A	Si	A443d
174	SP200S	20k	500m	55A	40		150A	Si	A443d
175	SSCH20000	20k	500m	55A	50		150	Si	A449e
176	60L200	20k	600m	25	40	8.3m	175	Si	A1pw
177	TPFHV200	20k*	750m	25A				Si	M950av
178	TPHHV200	20k*	750m	25A				Si	M950av
179	SLD20	20k	750m	30A	50		125A	Si	M239h
180	KVP20	20k	750m	50A	50		150A	SiΔ	M239h
181	80L200	20k	800m	25	60	8.3m	175	Si	A1pw
182	100L200	20k	1.0	25	60	8.3m	175	Si	A1pw
183	F200HL	20k	1.0	25A	30	10m	100A	SiΔ	M62
184	1N4873	20k	1.25	40A	150 §		125A	Si	M326f
185	67C200H20LSS	20k	1.25	50A	90		140A	Si	M101n
186	2ASLD20	20k	1.3	25A	200		175A	Si	M239h
187	2ASPC20	20k	1.3	25A	200	8.3m	100	Si	M950f*
188	SPC20	20k	1.5	25A	50	8.3m	175A	Si	M950f*
189	SPF200	20k*	1.5	25A			150A	Si	M950av
190	SPSHV200	20k*	1.5	25A				Si	M950av
191	6RM200	20k	2.0	25A	150	10m	150J	Si	A321
192	TPF200	20k*	2.2	25A				Si	M950av
193	TPH200	20k*	2.2	25A				Si	M950av
194	SODSLD20	20k	2.2	30A	290		140A	SiΔ	
195	FP200F	20k	2.2	55A	200		150A	Si	A440e
196	FP200S	20k	2.2	55A	200		150A	Si	A440e
197	HVHS20000	20k	2.2	55A	200	8.3m	150A	Si	A138v
198	KHP20	20k	2.25	25A	300		175A	SiΔ	
199	2ASPF200	20k*	2.6	25A			150A	Si	M950av
200	P200H	20k	3.0	25A	230	10m	100A	SiΔ	M460a
201	2ATPF200	20k*	3.9	25A				Si	M950av
202	2ATPH200	20k*	3.9	25A				Si	M950av
203	SODSPC20	20k	4.5	25A	300	8.3m	175A	Si	M950t*
204	SPS200	20k*	4.5	25A				Si	M950av
205	SODSPF200	20k*	4.8	25A				Si	M950av
206	HRSCH20000	20k	5.0	55	50			Si	A138f
207	SCPHN20	20k	5.5	55A	150		175J	Si	M1259c
208	10RM200	20k	6.0	25A	150	1.0u	150J	Si	M832
209	20RM200	20k	6.0	25A	250	1.0u	150J	Si	M832
210	SODTPF200	20k*	6.8	25				Si	M950av
211	SODTPH200	20k*	6.8	25A				Si	M950av
212	2ASPS200	20k*	7.8	25A				Si	M950av
213	SODSPS200	20k*	13.5	25A				Si	M950av
214	SP20	20k	20	100	3.0		150	SiΔ	A344vØ
215	S2KW20C5D	20k	30		200		150	Si	M894
216	S2KW20C5N	20k	30		200		150	Si	M894
217	S2KW20C5P	20k	30		200		150	Si	M894
218	S2KW20C5	20k	30	55A	200		150	Si	M894d
219	S4KW20KA5	20k	60	55A	400		150	Si	M894d
220	PR275-RT	21k	300u					Se	F124

SYMBOLS AND CODES EXPLAINED IN INTERPRETER

11. RECTIFIERS, HIGH VOLTAGE - PIV ≥ 20 kV (Cont'd)

IN ORDER OF: (1) PIV (2) IO MAX (3) @ TEMP & (4) TYPE NUMBER

LINE No.	4 TYPE NUMBER	1 PIV (V)	MAX AVG FWD DC CURRENT 2 Io MAX (A)	3 @ TEMP (°C)	MAX RATING SURGE CURR PEAK 1 Cy (A)	PULSE WIDTH (s)	MAX. TEMP (°C)	MAT	DRAWING NO.
1	1S2237	21k	3.0m	25A	3.0		125J	Si	
2	2L210	21k	20m	25	10	8.3m	175	Si	A1qa
3	5L210	21k	50m	25	10	8.3m	175	Si	A1qa
4	HVC2100	21k	50m	55A	1.5		150	Si	A168j
5	10L210	21k	100m	25	20	8.3m	175	Si	A1qa
6	15L210	21k	150m	25	20	8.3m	175	Si	A1qa
7	20L210	21k	200m	25	20	8.3m	175	Si	A1qa
8	25L210	21k	250m	25	20	8.3m	175	Si	A1qa
9	30L210	21k	300m	25	40	8.3m	175	Si	A1qa
10	40L210	21k	400m	25	40	8.3m	175	Si	A1qa
11	50L210	21k	500m	25	40	8.3m	175	Si	A1qa
12	60L210	21k	600m	25	40	8.3m	175	Si	A1qa
13	80L210	21k	800m	25	60	8.3m	175	Si	A1qa
14	100L210	21k	1.0	25	60	8.3m	175	Si	A1qa
15	TV16Si	22k	5.9m	45A	1.5	10m	110J	Si	
16	2L220	22k	20m	25	10	8.3m	175	Si	A1qb
17	5L220	22k	50m	25	10	8.3m	175	Si	A1qb
18	HVHJ22.5K	22k	50m	55A	5.0	8.3m	150	Si	A298af
19	SCHJ22.5K	22k	50m	55A	4.0		150	Si	A138g
20	1N3057	22k	100m	25A	8.0		165A	Si	A1rq
21	10L220	22k	100m	25	20	8.3m	175	Si	A1qb
22	SLD22U	22k	125m	100A	37	8.0m	150A	Si	Alrq
23	15L220	22k	150m	25	20	8.3m	175	Si	A1qb
24	20L220	22k	200m	25	20	8.3m	175	Si	A1qb
25	NTD22	22k	200m	25A	10		125A	Si△	A1ph
26	25L220	22k	250m	25	20	8.3m	175	Si	A1qb
27	30L220	22k	300m	25	40	8.3m	175	Si	A1qb
28	40L220	22k	400m	25	40	8.3m	175	Si	A1qb
29	50L220	22k	500m	25	40	8.3m	175	Si	A1qb
30	60L220	22k	600m	25	40	8.3m	175	Si	A1qb
31	80L220	22k	800m	25	60	8.3m	175	Si	A1qb
32	100L220	22k	1.0	25	60	8.3m	175	Si	A1qb
33	10RM220	22k	6.0	25A	150	1.0u	150J	Si	M832
34	20RM220	22k	6.0	25A	250	1.0u	150J	Si	M832
35	BY477	23k	2.0m	100J	500m			Si	A69m
36	2L230	23k	20m	25	10	8.3m	175	Si	A1qg
37	5L230	23k	50m	25	10	8.3m	175	Si	A1qg
38	10L230	23k	100m	25	20	8.3m	175	Si	A1qg
39	15L230	23k	150m	25	20	8.3m	175	Si	A1qg
40	20L230	23k	200m	25	20	8.3m	175	Si	A1qg
41	25L230	23k	250m	25	20	8.3m	175	Si	A1qg
42	30L230	23k	300m	25	40	8.3m	175	Si	A1qg
43	40L230	23k	400m	25	40	8.3m	175	Si	A1qg
44	50L230	23k	500m	25	40	8.3m	175	Si	A1qg
45	60L230	23k	600m	25	40	8.3m	175	Si	A1qg
46	80L230	23k	800m	25	60	8.3m	175	Si	A1qg
47	100L230	23k	1.0	25	60	8.3m	175	Si	A1qb
48	HA240EO	24k	10m	55A			125A	Si	A1xe
49	HA240LO	24k	10m	55A			125A	Si	A1me
50	HA240TO	24k	10m	55A			125A	Si	A1xf
51	2L240	24k	20m	25	10	8.3m	175	Si	A1qg
52	5L240	24k	50m	25	10	8.3m	175	Si	A1qg
53	1N3058	24k	100m	25A	8.0		165A	Si	A1rr
54	10L240	24k	100m	25	20	8.3m	175	Si	A1qh
55	SLD24U	24k	125m	100A	40	8.0m	150A	Si	Alrr
56	15L240	24k	150m	25	20	8.3m	175	Si	A1qh
57	20L240	24k	200m	25	20	8.3m	175	Si	A1qh
58	NTD24	24k	200m	25A	10		125A	Si△	A1pq
59	25L240	24k	250m	25	20	8.3m	175	Si	A1qh
60	30L240	24k	300m	25	40	8.3m	175	Si	A1qh
61	40L240	24k	400m	25	40	8.3m	175	Si	A1qh
62	50L240	24k	500m	25	40	8.3m	175	Si	A1qh
63	HSKE10000/4500-.4	24k	500m	45A	50	10m	150J	Si	S450c
64	60L240	24k	600m	25	40	8.3m	175	Si	A1qh
65	80L240	24k	800m	25	60	8.3m	175	Si	A1qh
66	100L240	24k	1.0	25	60	8.3m	175	Si	A1qh
67	HSKE10000/4500-1.2	24k	1.3	45A	120	10m	160J	Si	S450j
68	S1KW24C-4	24k	1.5	25A	150	8.3m	150	Si	M894c⊠
69	S1KW24C3	24k	1.5	55A	150		175J	Si	M894b
70	UGE3126AY4	24k	2.0	45A	60	10m		Si	M1076
71	S1KW24C3D	24k	15		100		150	Si	M894b
72	S1KW24C3N	24k	15		100		150	Si	M894b
73	S1KW24C3P	24k	15		100		150	Si	M894b
74	S2KW24C6D	24k	30		200		150	Si	M894
75	S2KW24C6N	24k	30		200		150	Si	M894
76	S2KW24C6P	24k	30		200		150	Si	M894
77	S2KW24C6	24k	30	55A	200		150	Si	M894e
78	S2KW24KA3	24k	60	55A	200		150	Si	M894b
79	S4KW24KA6	24k	60	55A	400		150	Si	M894e
80	HV5-25	25k	5.0m	40	3.0	8.0m	150A	Si△	A1te
81	HV5-25F	25k	5.0m	40	3.0	8.0m	125A	Si△	A1te
82	LHC5-25	25k	5.0m	50	3.0	8.3m	150	Si	A1te
83	B412-25-5	25k	5.0m	55	4.0		150	Si	A344z
84	CAX25	25k	10m	25	2.0	8.3m	90	Si	M982
85	KLR25	25k	10m	25	5.0		150S	Si	A1ny
86	HV10-25	25k	10m	40	3.0	8.0m	150A	Si△	A1te
87	HV10-25F	25k	10m	40	3.0	8.0m	125A	Si△	A1te
88	LHC10-25	25k	10m	50	3.0	8.3m	150	Si	A1te
89	B412-25-10	25k	10m	55	4.0		150	Si	A344z
90	SL25	25k	10m	55A	3.0	8.3m	150A	Si	A267b
91	2L250	25k	20m	25	10	8.3m	175	Si	A1qn
92	KL25	25k	20m	25	5.0		150S	Si	A1ny
93	HV25-25	25k	25m	40	3.0	8.0m	150A	Si△	A1te
94	HV25-25F	25k	25m	40	3.0	8.0m	125A	Si△	A1te
95	LHC25-25	25k	25m	50	3.0	8.3m	150	Si	A1te
96	B412-25-25	25k	25m	55	4.0		150	Si	A344z
97	5L250	25k	50m	25	10	8.3m	175	Si	A1qn
98	BYX35	25k	50m	50C	15	10m	125J	Si	A1sf
99	HVC2500	25k	50m	55A	1.5		150	Si	A168k
100	HVH25000	25k	50m	55	60	8.3m	150	Si	A138s
101	HVHF25000	25k	50m	55	60	8.3m	150	Si	A138s
102	HVHJ25K	25k	50m	55A	5.0	8.3m	150A	Si	A298ag
103	SM25	25k	50m	55A	4.0	8.3m	150S	Si	A344z
104	CP151	25k	50m	75				Si	M84bn
105	CP152	25k	50m	75				Si	M84bp
106	VF25	25k	85m	40	3.0	8.3m	150	Si	A1aad
107	10L250	25k	100m	25	20	8.3m	175	Si	A1qn
108	BCD25	25k	100m	25A	10		125A	Si	A1nz
109	MD25X1	25k	100m	50A	45	10m	125J	Si	S492
110	05RM250	25k	150m	25A	2.0	1.0	150J	Si	A83bv
111	15L250	25k	150m	25	20	8.3m	175	Si	A1qn
112	CFR25	25k	150m	25	10		100A	Si	F12y
113	20L250	25k	200m	25	20	8.3m	175	Si	A1qn
114	CF25	25k	200m	25	10		125A	Si	F12y
115	CL25	25k	200m	25	10		150S	Si△	A1ny
116	ESJA17-25	25k	250m		500m		120J	Si	A431
117	ESJA18-25	25k	250m		500m		120J	Si	A431a
118	25L250	25k	250m	25	20	8.3m	175	Si	A1qn
119	SLDHV25	25k	250m	25A	22		175A	Si	M239l
120	dc371A	25k	250m	35A	50		125A	Si	M1193d
121	67D250H53PNN	25k	250m	50A	35		150A	Si	A1zd
122	67D250H55FNN	25k	250m	50A	35		150A	Si	F12am
123	30L250	25k	300m	25	40	8.3m	175	Si	A1qn
124	67D250H20TTS	25k	350m	50A	50		140A	Si	M101p
125	40L250	25k	400m	25	40	8.3m	175	Si	A1qn
126	1RM250	25k	500m	25A	12	10m	150A	Si	M62h
127	50L250	25k	500m	25	40	8.3m	175	Si	A1qn
128	D250HL	25k	500m	25A	30	10m	100A	Si	M62f
129	SPCHV25	25k	500m	25A	23	8.3m	175A	Si	M950g*
130	SPFHV250	25k*	500m	25A			150A	Si	M950aw
131	dc576	25k	500m	35A	50		125A	Si	M1193f
132	423PH25AS1	25k	500m	55A	50		125J	Si	A443d
133	F927-71G	25k	500m	55A	50	8.3m	175	Si	A394f
134	KVF25	25k	500m	55A	50		175A	Si△	A83by
135	SCH25000	25k	500m	55A	50		175	Si	A138s
136	SP250F	25k	500m	55A	40		150A	Si	A443d
137	SP250S	25k	500m	55A	40		150A	Si	A443d
138	SSCH25000	25k	500m	55A	50		150	Si	A449f
139	CP154	25k	500m	75				Si	M84br
140	60L250	25k	600m	25	40	8.3m	175	Si	A1qn
141	TPFHV250	25k*	750m	25A				Si	M950aw
142	TPHHV250	25k*	750m	25A				Si	M950aw
143	SLD25	25k	750m	30A	50		125A	Si△	M239j
144	KVP25	25k	750m	50A	50		150A	Si△	M239j
145	80L250	25k	800m	25	60	8.3m	175	Si	A1qn
146	100L250	25k	1.0	25	60	8.3m	175	Si	A1qn
147	F250HL	25k	1.0	25A	70	10m	100A	Si	M62f
148	SCKV25K30	25k	1.0	25	50	8.3m	150J	Si	S475b
149	SCKV25K40	25k	1.0	25	150	8.3m	150J	Si	S475b
150	1N4546	25k	1.0	85A	50 §		125A	Si	M239j
151	1N4874	25k	1.25	40A	150 §		125A	Si	M326g
152	67C250H20LSS	25k	1.25	50A	90		140A	Si	M101p
153	2ASLD25	25k	1.3	25A	200		175A	Si	M239j
154	2ASPC25	25k	1.3	25A	200	8.3m	100	Si	M950g*
155	SPC25	25k	1.5	25A	50	8.3m	175A	Si	M950g*
156	SPF250	25k*	1.5	25A			150A	Si	M950aw
157	SPSHV250	25k*	1.5	25A				Si	M950aw
158	CP153	25k	1.5	75				Si	M84bq
159	6RM250	25k	2.0	25A	150	10m	150J	Si	A321
160	KHP25	25k	2.2	25A	300		175A	Si	
161	TPF250	25k*	2.2	25A				Si	M950aw
162	TPH250	25k*	2.2	25A				Si	M950aw
163	SODSLD25	25k	2.2	30A	290	8.3m	140A	Si△	
164	2ASPF250	25k*	2.6	25A			150A	Si	M950aw
165	P250H	25k	3.0	25A	230	10m	125J	Si△	M460a
166	2ATPF250	25k*	3.9	25A				Si	M950aw
167	2ATPH250	25k*	3.9	25A				Si	M950aw
168	SODSPC25	25k	4.5	25A	300	8.3m	175A	Si	M950w*
169	SODSPF250	25k*	4.5	25A				Si	M950aw
170	SPS250	25k*	4.5	25A				Si	M950aw
171	HRSCH25000	25k	5.0	55	50			Si	A138f
172	10RM250	25k	6.0	25A	150	1.0u	150J	Si	M832
173	20RM250	25k	6.0	25A	250	1.0u	150J	Si	M832
174	SODTPF250	25k*	6.8	25				Si	M950aw
175	SODTPH250	25k*	6.8	25A				Si	M950aw
176	2ASPS250	25k*	7.8	25A				Si	M950aw
177	SODSPS250	25k*	13.5	25A				Si	M950aw
178	SP25	25k	20	100	3.0		150	Si△	A344vØ
179	2L260	26k	20m	25	10	8.3m	175	Si	A1qq
180	5L260	26k	50m	25	10	8.3m	175	Si	A1qq
181	1N3059	26k	100m	25A	8.0	8.3m	165A	Si	A1rr
182	10L260	26k	100m	25	20	8.3m	175	Si	A1qq
183	SLD26U	26k	125m	100A	44	8.0m	150A	Si	Alrr
184	15L260	26k	150m	25	20	8.3m	175	Si	A1qq
185	20L260	26k	200m	25	20	8.3m	175	Si	A1qq
186	NTD26	26k	200m	25A	10	8.3m	125A	Si△	A1px
187	25L260	26k	250m	25	20	8.3m	175	Si	A1qq
188	30L260	26k	300m	25	40	8.3m	175	Si	A1qq
189	40L260	26k	400m	25	40	8.3m	175	Si	A1qq
190	50L260	26k	500m	25	40	8.3m	175	Si	A1qq
191	60L260	26k	600m	25	40	8.3m	175	Si	A1qq
192	80L260	26k	800m	25	60	8.3m	175	Si	A1qq
193	100L260	26k	1.0	25	60	8.3m	175	Si	A1qq
194	SCPHN26	26k	5.5	55A	150		175J	Si	M1259d
195	BY478	27k	2.0m	100J	500m			Si	A69m
196	2L270	27k	20m	25	10	8.3m	175	Si	A1qw
197	5L270	27k	50m	25	10	8.3m	175	Si	A1qw
198	10L270	27k	100m	25	20	8.3m	175	Si	A1qw
199	15L270	27k	150m	25	20	8.3m	175	Si	A1qw
200	20L270	27k	200m	25	20	8.3m	175	Si	A1qw
201	25L270	27k	250m	25	20	8.3m	175	Si	A1qw
202	30L270	27k	300m	25	40	8.3m	175	Si	A1qw
203	40L270	27k	400m	25	40	8.3m	175	Si	A1qw
204	50L270	27k	500m	25	40	8.3m	175	Si	A1qw
205	60L270	27k	600m	25	40	8.3m	175	Si	A1qw
206	80L270	27k	800m	25	60	8.3m	175	Si	A1qw
207	100L270	27k	1.0	25	60	8.3m	175	Si	A1qw
208	2L280	28k	20m	25	10	8.3m	175	Si	A1qx
209	5L280	28k	50m	25	10	8.3m	175	Si	A1qx
210	1N3060	28k	100m	25A	8.0		165A	Si	A1rs
211	10L280	28k	100m	25	20	8.3m	175	Si	A1qx
212	SLD28U	28k	125m	100A	47	8.0m	150A	Si	Alrs
213	15L280	28k	150m	25	20	8.3m	175	Si	A1qx
214	20L280	28k	200m	25	20	8.3m	175	Si	A1qx
215	NTD28	28k	200m	25A	10		125A	Si△	A1qc
216	25L280	28k	250m	25	20	8.3m	175	Si	A1qx
217	30L280	28k	300m	25	40	8.3m	175	Si	A1qx
218	40L280	28k	400m	25	40	8.3m	175	Si	A1qx

SYMBOLS AND CODES EXPLAINED IN INTERPRETER

11. RECTIFIERS, HIGH VOLTAGE - PIV ≥ 20 kV (Cont'd)

IN ORDER OF: (1) PIV (2) IO MAX (3) @ TEMP & (4) TYPE NUMBER

LINE No.	4 TYPE NUMBER	1 PIV (V)	MAX AVG FWD DC CURRENT 2 Io MAX (A)	3 @ TEMP (°C)	MAX RATING SURGE CURR PEAK 1 Cy (A)	PULSE WIDTH (s)	MAX. TEMP (°C)	MAT	DRAWING NO.
1	50L280	28k	500m	25	40	8.3m	175	Si	A1qx
2	60L280	28k	600m	25	40	8.3m	175	Si	A1qx
3	80L280	28k	800m	25	60	8.3m	175	Si	A1qx
4	100L280	28k	1.0	25	60	8.3m	175	Si	A1qx
5	FD3500AH56	28k	3.5k	101C	70k§	8.3m	150J	Si△	M1019
6	2L290	29k	20m	25	10	8.3m	175	Si	A1qz
7	5L290	29k	50m	25	10	8.3m	175	Si	A1qz
8	10L290	29k	100m	25	20	8.3m	175	Si	A1qz
9	15L290	29k	150m	25	20	8.3m	175	Si	A1qz
10	20L290	29k	200m	25	20	8.3m	175	Si	A1qz
11	25L290	29k	250m	25	20	8.3m	175	Si	A1qz
12	30L290	29k	300m	25	40	8.3m	175	Si	A1qz
13	40L290	29k	400m	25	40	8.3m	175	Si	A1qz
14	50L290	29k	500m	25	40	8.3m	175	Si	A1qz
15	60L290	29k	600m	25	40	8.3m	175	Si	A1qz
16	80L290	29k	800m	25	60	8.3m	175	Si	A1qz
17	100L290	29k	1.0	25	60	8.3m	175	Si	A1qz
18	HV5-30	30k	5.0m	40	3.0	8.0m	150A	Si△	A1tf
19	HV5-30F	30k	5.0m	40	3.0	8.0m	125A	Si△	A1tf
20	VF5-30	30k	5.0m	40A	3.0		150A	Si△	A1uj
21	LHC5-30	30k	5.0m	50	3.0	8.3m	150	Si	A1tf
22	B412-30-5	30k	5.0m	55	4.0		150	Si	A298ak
23	K1	30k	5.0m	65	1.0	8.3m	65A	Si	A1qy
24	HA300EP	30k	8.0m	55A			125A	Si	A1xe
25	HA300LP	30k	8.0m	55A			125A	Si	A1me
26	HA300TP	30k	8.0m	55A			125A	Si	A1xf
27	CAX30	30k	10m	25	2.0	8.3m	90	Si	M982
28	HVRG300	30k	10m	25	20	1.0m	125A	Si	A1vb
29	HV10-30	30k	10m	40	3.0	8.0m	150A	Si△	A1tf
30	HV10-30F	30k	10m	40	3.0	8.0m	125A	Si△	A1tf
31	LHC10-30	30k	10m	50	3.0	8.3m	150	Si	A1tf
32	B412-30-10	30k	10m	55	4.0		150	Si	A298ak
33	SL30	30k	10m	55A	3.0	8.3m	150A	Si	A267c
34	2L300	30k	20m	25	10	8.3m	175	Si	A1ra
35	KL30	30k	20m	25	5.0		150S	Si	A1pr
36	HV25-30	30k	25m	40	3.0	8.0m	150A	Si△	A1tf
37	HV25-30F	30k	25m	40	3.0	8.0m	125A	Si△	A1tf
38	LHC25-30	30k	25m	50	3.0	8.3m	150	Si	A1tf
39	B412-30-25	30k	25m	55	4.0		150	Si	A298ak
40	5L300	30k	50m	25	10	8.3m	175	Si	A1ra
41	HVC3000	30k	50m	55A	1.5		150	Si	A168m
42	HVHJ30K	30k	50m	55A	5.0	8.3m	150	Si	A298ag
43	SM30#C	30k	50m	55A	4.0	8.3m	150S	Si	A1nt
44	CP156	30k	75m	75				Si	M84bt
45	VF30	30k	80m	40	3.0	8.3m	150	Si	A1aae
46	1N3061	30k	100m	25A	8.0		165A	Si	A1rs
47	10L300	30k	100m	25	20	8.3m	175	Si	A1ra
48	BCD30	30k	100m	25A	10		125A	Si	A1ps
49	SLD30U	30k	125m	100A	50	8.0m	150A	Si	Alrs
50	15L300	30k	150m	25	20	8.3m	175	Si	A1ra
51	CFR30	30k	150m	25	10		100A	Si	F12z
52	20L300	30k	200m	25	20	8.3m	175	Si	A1ra
53	CF30	30k	200m	25	10		125A	Si	F12z
54	CL30	30k	200m	25	10		150S	Si△	A1pr
55	NTD30	30k	200m	25A	10		125A	Si△	A1qj
56	SCKV30K12F	30k	200m	25A	10		175J	Si	M1268
57	ESJA18-30	30k	250m		500m		120J	Si	A431a
58	25L300	30k	250m	25	20	8.3m	175	Si	A1ra
59	M300K	30k	250m	25A	2.0	10m	150A	Si△	A83k
60	SLDHV30	30k	250m	25A	22		175A	Si	M239j
61	67D300H04TNN	30k	250m	50A	50		140A	Si	M101e
62	67D300H53PNN	30k	250m	50A	35		150A	Si	A1ze
63	67D300H55FNN	30k	250m	50A	35		150A	Si	F12an
64	CP155	30k	250m	75				Si	M84bs
65	30L300	30k	300m	25	40	8.3m	175	Si	A1ra
66	67D300H20TTS	30k	350m	50A	50		140A	Si	M101p
67	40L300	30k	400m	25	40	8.3m	175	Si	A1ra
68	50L300	30k	500m	25	40	8.3m	175	Si	A1ra
69	SPCHV30	30k	500m	25A	23	8.3m	175A	Si	M950g*
70	SPFHV300	30k*	500m	25A			150A	Si	M950ax
71	SCHJ30K	30k	0.5	55A	25		150	Si	A138j
72	60L300	30k	600m	25	40	8.3m	175	Si	A1ra
73	TPFHV300	30k*	750m	25A				Si	M950ax
74	TPHHV300	30k*	750m	25A				Si	M950ax
75	SLD30	30k	750m	30A	50		125A	Si△	M239j
76	KVP30	30k	750m	50A	50		150A	Si△	
77	80L300	30k	800m	25	60	8.3m	175	Si	A1ra
78	100L300	30k	1.0	25	60	8.3m	175	Si	A1ra
79	F300HL	30k	1.0	25A	30	10m		Si	M460c
80	CP157	30k	1.0	75				Si	M84bu
81	1N4875	30k	1.25	40A	150 §		125A	Si	M326h
82	67C300H20LSS	30k	1.25	50A	90		140A	Si	M101q
83	2ASLD30	30k	1.3	25A	200		175A	Si	M239j
84	2ASPC30	30k	1.3	25A	200	8.3m	100	Si	M950g*
85	SPC30	30k	1.5	25A	50	8.3m	175A	Si	M950g*
86	SPF300	30k*	1.5	25A			150A	Si	M950ax
87	SPSHV300	30k*	1.5	25A				Si	M950ax
88	TPF300	30k*	2.2	25A				Si	M950ax
89	TPH300	30k*	2.2	25A				Si	M950ax
90	SODSLD30	30k	2.2	30A	290		140A	Si△	
91	KHP30	30k	2.25	25A	300		175A	Si	
92	2ASPF300	30k*	2.6	25A			150A	Si	M950ax
93	OSS9110-30	30k	3.5	35A	85	10m	175J	Si	
94	2ATPF300	30k*	3.9	25A				Si	M950ax
95	2ATPH300	30k*	3.9	25A				Si	M950ax
96	OSS9310-30	30k	4.0	30A	180	10m	175J	Si	
97	SODSPC30	30k	4.5	25A	300	8.3m	175A	Si	M950x*
98	SODSPF300	30k*	4.5	25A				Si	M950ax
99	SPS300	30k*	4.5	25A				Si	M950ax
100	OSS9210-30	30k	5.0	35A	360	10m	175J	Si	
101	SCPHN30	30k	5.5	55A	150		175J	Si	M1259e
102	SODTPF300	30k*	6.8	25				Si	M950ax
103	SODTPH300	30k*	6.8	25A				Si	M950ax
104	2ASPS300	30k*	7.8	25A				Si	M950ax
105	OSS9410-30	30k	10	35A	800	10m	175J	Si	
106	SODSPS300	30k*	13.5	25A				Si	M950ax
107♦	TV18Si	31k	4.8m	45A	1.5 §	10m	85J	Si	A50g
108	HSKE14000/6300-.4								
		32k	500m	45A	50	10m	150J	Si	S450d
109	S1KW32C4	32k	1.5	55A	150		175J	Si	M894c
110	S1KW32C4D	32k	15		100		150	Si	M894c
111	S1KW32C4N	32k	15		100		150	Si	M894c
112	S1KW32C4P	32k	15		100		150	Si	M894c
113	S1KW32KA2	32k	15	55A	100		150	Si	M894a
114	S2KW32KA4	32k	60	55A	200		150	Si	M894c
115	SCKV33K12	33k	300m	25	14	8.3m	150J	Si	S475
116	LHC5-35	35k	5.0m	50	3.0	8.3m	150	Si	A1tf
117	LHC10-35	35k	10m	50	3.0	8.3m	150	Si	A1tf
118	KL35	35k	20m	25	5.0		150S	Si	A1qd
119	LHC25-35	35k	25m	50	3.0	8.3m	150	Si	A1tf
120	HVHJ35K	35k	50m	55A	5.0	8.3m	150A	Si	A298ah
121	BCD35	35k	100m	25A	10		125A	Si	A1qe
122	CFR35	35k	150m	25	10		100A	Si	F12aa
123	CF35	35k	200m	25	10		125A	Si	F12aa
124	CL35	35k	200m	25	10		150S	Si△	A1qd
125	SLDHV35	35k	250m	25A	22		175A	Si	M239k
126	SPCHV35	35k	500m	25A	23	8.3m	175A	Si	M950h*
127	SPFHV350	35k*	500m	25A			150A	Si	M950ay
128	TPFHV350	35k*	750m	25A				Si	M950ay
129	TPHHV350	35k*	750m	25A				Si	M950ay
130	SLD35	35k	750m	30A	50		125A	Si△	M239k
131	KVP35	35k	750m	50A	50		150A	Si△	
132	2ASLD35	35k	1.2	25A	200		175A	Si	M239k
133	2ASPC35	35k	1.2	25A	200	8.3m	100	Si	M950h*
134	SPC35	35k	1.5	25A	50	8.3m	175A	Si	M950h*
135	SPF350	35k*	1.5	25A			150A	Si	M950ay
136	SPSHV350	35k*	1.5	25A				Si	M950ay
137	TPF350	35k*	2.2	25A				Si	M950ay
138	TPH350	35k*	2.2	25A				Si	M950ay
139	SODSLD35	35k	2.2	30A	290		140A	Si△	
140	KHP35	35k	2.25	25A	300		175A	Si	
141	2ASPF350	35k*	2.4	25A			150A	Si	M950ay
142	2ATPF350	35k*	3.6	25A				Si	M950ay
143	2ATPH350	35k*	3.9	25A				Si	M950ay
144	SODSPC35	35k	4.5	25A	300	8.3m	175A	Si	M950y*
145	SODSPF350	35k*	4.5	25A				Si	M950ay
146	SPS350	35k*	4.5	25A				Si	M950ay
147	SODTPF350	35k*	6.8	25				Si	M950ay
148	SODTPH350	35k*	6.8	25A				Si	M950ay
149	2ASPS350	35k*	7.2	25A				Si	M950ay
150	SODSPS350	35k*	13.5	25A				Si	M950ay
151	S1KW36C-6	36k	1.5	25A	150	8.3m	150	Si	M984e☑
152	HVHJ37.5K	37k	50m	55A	5.0	8.3m	150	Si	A298ah
153	SCHJ37.5K	37k	50m	55A	4.0		150	Si	A138p
154	HV5-40	40k	5.0m	40	3.0	8.0m	150A	Si△	A1tf
155	HV5-40F	40k	5.0m	40	3.0	8.0m	125A	Si△	A1tf
156	LHC5-40	40k	5.0m	50	3.0	8.3m	150	Si	A1tf
157	B412-40-5	40k	5.0m	55	4.0		150	Si	A298ak
158	HVRG400	40k	10m	25	20	1.0m	125A	Si	A1vb
159	HV10-40	40k	10m	40	3.0	8.0m	150A	Si△	A1tf
160	HV10-40F	40k	10m	40	3.0	8.0m	125A	Si△	A1tf
161	LHC10-40	40k	10m	50	3.0	8.3m	150	Si	A1tf
162	B412-40-10	40k	10m	55	4.0		150	Si	A298ak
163	KL40	40k	20m	25	5.0		150S	Si	A1qs
164	HV25-40	40k	25m	40	3.0	8.0m	150A	Si△	A1tf
165	HV25-40F	40k	25m	40	3.0	8.0m	125A	Si△	A1tf
166	LHC25-40	40k	25m	50	3.0	8.3m	150	Si	A1tf
167	B412-40-25	40k	25m	55	4.0		150	Si	A298ak
168	HVHJ40K	40k	50m	55A	5.0	8.3m	150A	Si	A298aj
169	BCD40	40k	100m	25A	10		125A	Si	A1qt
170	dc8020	40k	100m	35A	50		125A	Si	M1193k
171	CP158	40k	100m	75				Si	M84bv
172	CFR40	40k	150m	25	10		100A	Si	F12ab
173	SLDHV40	40k	150m	25A	22		175A	Si	M239k
174	CF40	40k	200m	25	10		125A	Si	F12ab
175	CL40	40k	200m	25	10		150S	Si△	A1qs
176	67D400H04TNN	40k	250m	50A	50		140A	Si	M101f
177	67D400H55FNN	40k	250m	50A	35		150A	Si	F12ap
178	SPCHV40	40k	300m	25A	23	8.3m	175A	Si	M950h*
179	SPFHV400	40k*	300m	25A			150A	Si	M950az
180	67D400H20TTS	40k	350m	50A	50		140A	Si	M101r
181	TPFHV400	40k*	450m	25A				Si	M950az
182	TPHHV400	40k*	450m	25A				Si	M950az
183	HSKE17000/7600-.3								
		40k	450m	45A	50	10m	150J	Si	S450e
184	SLD40	40k	750m	30A	50		125A	Si△	M239k
185	KVP40	40k	750m	50A	50		150A	Si△	
186	SPSHV400	40k*	900m	25A				Si	M950az
187	2ASLD40	40k	1.2	25A	200		175A	Si	M239k
188	2ASPC40	40k	1.2	25A	200	8.3m	100	Si	M950h*
189	1N4876	40k	1.25	40A	150 §		125A	Si	M326j
190	67C400H20LSS	40k	1.25	50A	90		140A	Si	M101s
191	SPC40	40k	1.5	25A	50	8.3m	175A	Si	M950h*
192	SPF400	40k*	1.5	25A			150A	Si	M950az
193	2ASLD40TR	40k	1.5	55$				Si	M240d
194	S1KW40C5	40k	1.5	55A	150		175J	Si	M894d
195	TPF400	40k*	2.2	25A				Si	M950az
196	TPH400	40k*	2.2	25A				Si	M950az
197	SODSLD40	40k	2.2	30A	290		140A	Si△	
198	KHP40	40k	2.25	25A	300		175A	Si△	
199	2ASPF400	40k*	2.4	25A			150A	Si	M950az
200	P400H	40k	3.0	25A	230	10m	100A	Si△	M460b
201	2ATPF400	40k*	3.6	25A				Si	M950az
202	2ATPH400	40k*	3.6	25A				Si	M950az
203	SODSPC40	40k	4.5	25A	300	8.3m	175A	Si	M950z*
204	SODSPF400	40k*	4.5	25A				Si	M950az
205	SPS400	40k*	4.5	25A				Si	M950az
206	SODTPF400	40k*	6.8	25				Si	M950az
207	SODTPH400	40k*	6.8	25A				Si	M950az
208	2ASPS400	40k*	7.2	25A				Si	M950az
209	SODSPS400	40k*	13.5	25A				Si	M950az
210	S2KW40KA5	40k	60	55A	200		150	Si	M894d
211	S1083	40k	1.5k	55	300	8.3		Si	M240h
212	VF40	40k	45k	40	3.0	8.3m	150	Si	A1aae
213	PTC219	45k	3.0m	25				Si	F95
214	MD45H01	45k	10m	50C	1.0	10m	100J	Si	F129
215	MD-45H01	45k	10m	50A	1.0	10m	100J	Si	F129
216	SL45	45k	10m	55A	3.0	8.3m	150A	Si	A267d
217	KL45	45k	20m	25	5.0		150S	Si	A1rc
218	HVHJ45K	45k	50m	55A	5.0	8.3m	150	Si	A298aj

SYMBOLS AND CODES EXPLAINED IN INTERPRETER

11. RECTIFIERS, HIGH VOLTAGE - PIV ≥ 20 kV (Cont'd)

IN ORDER OF: (1) PIV (2) IO MAX (3) @ TEMP & (4) TYPE NUMBER

LINE No.	4 TYPE NUMBER	1 PIV (V)	MAX AVG FWD DC CURRENT 2 Io MAX (A)	3 @ TEMP (°C)	MAX RATING SURGE CURR PEAK 1 Cy (A)	PULSE WIDTH (s)	MAX. TEMP (°C)	MAT	DRAWING NO.
1	SCHJ45K	45k	50m	55A	4.0		150	Si	A138q
2	SM45	45k	50m	55A	4.0	8.3m	150S	Si	A1yv
3	BCD45	45k	100m	25A	10		125A	Si	A1rd
4	CFR45	45k	150m	25	10		100A	Si	F12ac
5	SLDHV45	45k	150m	25A	22		175A	Si	M239l
6	CF45	45k	200m	25	10		125A	Si	F12ac
7	CL45	45k	200m	25	10		150S	Si△	A1rc
8	SCKV45K12F	45k	200m	25A	10		175J	Si	M1268
9	SCKV45K12	45k	300m	25	14	8.3m	150J	Si	S475a
10	SPCHV45	45k	300m	25A	23	8.3m	175A	Si	M950j*
11	SPFHV450	45k*	300m	25A			150A	Si	M950ba
12	TPFHV450	45k*	450m	25A				Si	M950ba
13	TPHHV450	45k*	450m	25A				Si	M950ba
14	SLD45	45k	750m	30A	50		125A	Si△	M239l
15	KVP45	45k	750m	50A	50		150A	Si△	
16	SPSHV450	45k*	900m	25A				Si	M950ba
17	2ASLD45	45k	1.2	25A	200		175A	Si	M239l
18	2ASPC45	45k	1.2	25A	200	8.3m	100	Si	M950j*
19	SPC45	45k	1.5	25A	50	8.3m	175A	Si	M950j*
20	SPF450	45k*	1.5	25A			150A	Si	M950ba
21	TPF450	45k*	2.2	25A				Si	M950ba
22	TPH450	45k*	2.2	25A				Si	M950ba
23	SODSLD45	45k	2.2	30A	290		140A	Si△	
24	KHP45	45k	2.25	25A	300		175A	Si	
25	2ASPF450	45k*	2.4	25A			150A	Si	M950ba
26	2ATPF450	45k*	3.6	25A				Si	M950ba
27	2ATPH450	45k*	3.6	25A				Si	M950ba
28	SODSPC45	45k	4.5	25A	300	8.3m	175A	Si	M950aa*
29	SODSPF450	45k*	4.5	25A				Si	M950ba
30	SPS450	45k*	4.5	25A				Si	M950ba
31	SODTPF450	45k*	6.8	25				Si	M950ba
32	SODTPH450	45k*	6.8	25A				Si	M950ba
33	2ASPS450	45k*	7.2	25A				Si	M950ba
34	SODSPS450	45k*	13.5	25A				Si	M950ba
35	S1KW48C6D	48k	15		100		150	Si	M894
36	S1KW48C6N	48k	15		100		150	Si	M894
37	S1KW48C6P	48k	15		100		150	Si	M894
38	S1KW48KA3	48k	15	55A	100		150	Si	M894b
39	S2KW48KA6	48k	60	55A	200		150	Si	M894e

PIV ≥ 50 kV

LINE No.	4 TYPE NUMBER	1 PIV (V)	MAX AVG FWD DC CURRENT 2 Io MAX (A)	3 @ TEMP (°C)	MAX RATING SURGE CURR PEAK 1 Cy (A)	PULSE WIDTH (s)	MAX. TEMP (°C)	MAT	DRAWING NO.
43	B412-50-5	50k	5.0m	55	4.0		150	Si	A298am
44	B412-50-10	50k	10m	55	4.0		150	Si	A298am
45	KL50	50k	20m	25	5.0		150S	Si	A1rh
46	B412-50-25	50k	25m	55	4.0		150	Si	A298am
47	VF50	50k	40m	40	3.0	8.3m	150	Si	A1aae
48	BCD50	50k	100m	25A	10		125A	Si	A1rj
49	CY501H	50k	100m	25A	30	10m	125J	Si	A94t
50	CFR50	50k	150m	25	10		100A	Si	F12ad
51	SLDHV50	50k	150m	25A	22		175A	Si	M239l
52	CF50	50k	200m	25	10		125A	Si	F12ad
53	CL50	50k	200m	25	10		150S	Si△	A1rh
54	67D500H55FNN	50k	250m	50A	35		150A	Si	F12aq
55	SPCHV50	50k	300m	25A	23	8.3m	175A	Si	M950j*
56	SPFHV500	50k*	300m	25A			150A	Si	M950bb
57	67D500H20TTS	50k	350m	50A	50		140A	Si	M101r
58	TPFHV500	50k*	450m	25A				Si	M950bb
59	TPHHV500	50k*	450m	25A				Si	M950bb
60	SLD50	50k	750m	30A	50		125A	Si△	M239l
61	KVP50	50k	750m	50A	50		150A	Si△	
62	SPSHV500	50k*	900m	25A				Si	M950bb
63	2ASLD50	50k	1.0	25A	200		175A	Si	M239l
64	2ASPC50	50k	1.0	25A	200	8.3m	100	Si	M950j*
65	1N4877	50k	1.25	40A	150 §		125A	Si	M326k
66	67C500H20LSS	50k	1.25	50A	90		140A	Si	M101u
67	SPC50	50k	1.5	25A	50	8.3m	175A	Si	M950j*
68	SPF500	50k*	1.5	25A			150A	Si	M950bb
69	2ASPF500	50k*	2.0	25A			150A	Si	M950bb
70	TPF500	50k*	2.2	25A				Si	M950bb
71	TPH500	50k*	2.2	25A				Si	M950bb
72	SODSLD50	50k	2.2	30A	290		140A	Si△	
73	KHP50	50k	2.25	25A	300		175A	Si△	
74	2ATPF500	50k*	3.0	25A				Si	M950bb
75	2ATPH500	50k*	3.0	25A				Si	M950bb
76	SODSPC50	50k	4.5	25A	300	8.3m	175A	Si	M950ab*
77	SODSPF500	50k*	4.5	25A				Si	M950bb
78	SPS500	50k*	4.5	25A				Si	M950bb
79	2ASPS500	50k*	6.0	25A				Si	M950bb
80	SODTPF500	50k*	6.8	25				Si	M950bb
81	SODTPH500	50k*	6.8	25A				Si	M950bb
82	SODSPS500	50k*	13.5	25A				Si	M950bb
83	SCKV60K12F	60k	200m	25A	10		175J	Si	M1268
84	dc250R	60k	200m	35A	50		125A	Si	M1193c
85	67D600H20TTS	60k	350m	50A	50		140A	Si	M101t
86	S1KW64KA4	64k	15	55A	100		150	Si	M894c
87	S1KW96KA6	64k	15	55A	100		150	Si	M894e
88	SCKV66K12	66k	300m	25	14	8.3m	150J	Si	S475b
89	CY751H	75k	100m	25A	30	10m	125J	Si	A94t
90	SLDHV75	75k	100m	25A	22		175A	Si	M239m
91	ED75X1	75k	100m	50C	45	10m	125J	Si	F109
92	SPCHV75	75k	200m	25A	23	8.3m	175A	Si	M950ac*
93	SPFHV750	75k*	200m	25A			150A	Si	M950bc
94	TPFHV750	75k*	300m	25A				Si	M950bc
95	TPHHV750	75k*	300m	25A				Si	M950bc
96	67D750H20TTS	75k	350m	50A	50		140A	Si	M101t
97	SPSHV750	75k*	600m	25A				Si	M950bc
98	2ASLD75	75k	800m	25A	200		175A	Si	M239m
99	2ASPC75	75k	800m	25A	200	8.3m	100	Si	M950ac*
100	SPC75	75k	1.0	25A	50	8.3m	175A	Si	M950ac*
101	SPF750	75k*	1.0	25A			150A	Si	M950bc
102	1N4887	75k	1.25	40A	150 §		125A	Si	M326l
103	67C750H20LSS	75k	1.25	50A	90		140A	Si	M101v
104	TPF750	75k*	1.5	25A				Si	M950bc
105	TPH750	75k*	1.5	25A				Si	M950bc
106	2ASPF750	75k*	1.6	25A			150A	Si	M950bc
107	SODSLD75	75k	2.0	25A	300		175A	Si	
108	2ATPF750	75k*	2.4	25A				Si	M950bc
109	2ATPH750	75k*	2.4	25A				Si	M950bc
110	SPS750	75k*	3.0	25A				Si	M950bc
111	SODSPC75	75k	4.0	25A	300	8.3m	175A	Si	M950af*
112	SODSPF750	75k*	4.0	25A				Si	M950bc
113	2ASPS750	75k*	4.8	25A				Si	M950bc
114	SODTPF750	75k*	6.0	25				Si	M950bc
115	SODTPH750	75k*	6.0	25A				Si	M950bc
116	SODSPS750	75k*	12	25A				Si	M950bc
117	DD0.22/80X41	80k	220m	35A	20	10m	125J	Si	
118	SKXA75M	80k	350m	75A	90	10m	125J	Si	F86c
119	SKXA75N	80k	350m	75A	90	10m	125J	Si	F86b
120	SKXA75000	80k	350m	75A	90	10m	125J	Si	F86g
121	BYX91-90K	90k	200m	50C	25	10m	125J	Si	F12af

PIV ≥ 100 kV

LINE No.	4 TYPE NUMBER	1 PIV (V)	MAX AVG FWD DC CURRENT 2 Io MAX (A)	3 @ TEMP (°C)	MAX RATING SURGE CURR PEAK 1 Cy (A)	PULSE WIDTH (s)	MAX. TEMP (°C)	MAT	DRAWING NO.
125	MD100X08C	100k	80m	5C	25	10m	100J	Si	F134
126	MD-100X08C	100k	80m	50C	25	10m	100J	Si	
127	SCKV100K3	100k	100m	25	25	8.3m	150J	Si	S475
128	SLDHV100	100k	100m	25A	22		175A	Si	M239n
129	ED100X1	100k	100m	50C	45	10m	125J	Si	F109a
130	SPCHV100	100k	200m	25A	23	8.3m	175A	Si	M950ad*
131	SPFHV1000	100k*	200m	25A			150A	Si	M950bd
132	D0.22/100X11	100k	220m	35A	20	10m	125J	Si	
133	HPA100	100k	220m	55	20	8.3m	125A	Si	M937▾
134	UHV100	100k	220m	55	25		125A	Si	M1197
135	TPFHV1000	100k*	300m	25A				Si	M950bd
136	TPHHV1000	100k*	300m	25A				Si	M950bd
137	SLD100	100k	500m	25A	50		175A	Si	M239n
138	SPSHV1000	100k*	600m	25A				Si	M950bd
139	2ASLD100	100k	750m	25A	200		175A	Si	M239n
140	2ASPC100	100k	750m	25A	200	8.3m	100	Si	M950ad*
141	SPC100	100k	1.0	25A	50	8.3m	175A	Si	M950ad*
142	SPF1000	100k*	1.0	25A			150A	Si	M950bd
143	2ASPF1000	100k*	1.5	25A			150A	Si	M950bd
144	TPF1000	100k*	1.5	25A				Si	M950bd
145	TPH1000	100k*	1.5	25A				Si	M950bd
146	SODSLD100	100k	1.7	25A	300		175A	Si	
147	SPS1000	100k*	2.0	25A				Si	M950bd
148	2ATPF1000	100k*	2.2	25A				Si	M950bd
149	2ATPH1000	100k*	2.2	25A				Si	M950bd
150	SODSPC100	100k	3.5	25A	300	8.3m	175A	Si	M950ag*
151	SODSPF1000	100k*	3.5	25A				Si	M950bd
152	2ASPS1000	100k*	4.5	25A				Si	M950bd
153	SODTPF1000	100k*	5.2	25				Si	M950bd
154	SODTPH1000	100k*	5.2	25A				Si	M950bd
155	SODSPS1000	100k*	10.5	25A				Si	M950bd
156	SKXA100M	105k	350m	75A	90	10m	125J	Si	F86d
157	SKXA100N	105k	350m	75A	90	10m	125J	Si	F86c
158	SLDHV120	120k	100m	25A	22		175A	Si	M239p
159	SPCHV120	120k	200m	25A	23	8.3m	175A	Si	M950ae*
160	SPFHV1200	120k*	200m	25A			150A	Si	M950be
161	BYX91-120K	120k	200m	50C	25	10m	125J	Si	F12aq
162	TPFHV1200	120k*	300m	25A				Si	M950be
163	TPHHV1200	120k*	300m	25A				Si	M950be
164	SLD120	120k	500m	25A	50		175A	Si	M239p
165	SPSHV1200	120k*	600m	25A				Si	M950be
166	2ASLD120	120k	750m	25A	200		175A	Si	M239p
167	2ASPC120	120k	750m	25A	200	8.3m	100	Si	M950ae*
168	SPC120	120k	1.0	25A	50	8.3m	175A	Si	M950ae*
169	SPF1200	120k*	1.0	25A			150A	Si	M950be
170	2ASPF1200	120k*	1.5	25A			150A	Si	M950be
171	TPF1200	120k*	1.5	25A				Si	M950be
172	TPH1200	120k*	1.5	25A				Si	M950be
173	SODSLD120	120k	1.7	25A	300		175A	Si	
174	2ATPF1200	120k*	2.2	25A				Si	M950be
175	2ATPH1200	120k*	2.2	25A				Si	M950be
176	SPS1200	120k*	3.0	25A				Si	M950be
177	SODSPC120	120k	3.5	25A	300	8.3m	175A	Si	M950ah*
178	SODSPF1200	120k*	3.5	25A				Si	M950be
179	2ASPS1200	120k*	4.5	25A				Si	M950be
180	SODTPF1200	120k*	5.2	25				Si	M950be
181	SODTPH1200	120k*	5.2	25A				Si	M950be
182	SODSPS1200	120k*	10.5	25A				Si	M950be
183	MD125N08C	125k	80m	50C	25	10m	100J	Si	F131
184	MD-125N08C	125k	80m	50C	25	10m	100J	Si	
185	ED125X1	125k	100m	50C	45	10m	125J	Si	F109b
186	D0.22/125X31	125k	220m	35A	20	10m	125J	Si	
187	HPA125	125k	220m	55	20	8.3m	125A	Si	M937a▾
188	UHV125	125k	220m	55	25		125A	Si	M1197
189	SKXA125M	135k	350m	75A	90	10m	125J	Si	F86f
190	SKXA125N	135k	350m	75A	90	10m	125J	Si	F86e
191	SCKV150K3	150k	100m	25	25	8.3m	150J	Si	S475a
192	ED150X1	150k	100m	50C	45	10m	125J	Si	F109c
193	BYX91-150K	150k	200m	50C	25	10m	125J	Si	F12ah
194	D0.22/150X31	150k	220m	35A	20	10m	125J	Si	
195	HPA150	150k	220m	55	20	8.3m	125A	Si	M937a▾
196	UHV150	150k	220m	55	25		125A	Si	M1197
197	D0.22/80x41	160k	220m	35A	20	10m	125J	Si	M1199
198	SKXA150M	160k	350m	75A	90	10m	125J	Si	F86f
199	SKXA150N	160k	350m	75A	90	10m	125J	Si	F86e
200	UHV175	175k	220m	55	25		125A	Si	M1197
201	BYX91-180K	180k	200m	50C	25	10m	125J	Si	F12ah
202	52HV100AV18L	180k	250m	45	25	10m	125J	Si	M1203b
203	SCKV200K3	200k	100m	25	25	8.3m	150J	Si	S475b
204	HPA200	200k	220m	55	20	8.3m	125A	Si	M937b▾
205	UHV200	200k	220m	55	25		125A	Si	M1197a
206	UHV225	225k	220m	55	25		125A	Si	M1197a
207	HPA250	250k	220m	55	20	8.3m	125	Si	M937b▾
208	UHV250	250k	220m	55	25		125A	Si	M1197a
209	UHV275	275k	220m	55	25		125A	Si	M1197a
210	UHV300	300k	220m	55	25		125A	Si	M1197a
211	3001PDN60	600k	3.0k	108C	50k§	8.3m	200J	Si△	C1001a☑
212	101KL80S25	800k	100	100C	3.0k		175J	Si△	DO8
213	3001PDN80	800k	3.0k	108C	50k§	8.3m	200J	Si△	C1001a☑

SYMBOLS AND CODES EXPLAINED IN INTERPRETER

IN ORDER OF (1) TYPE (2) MAT AND (3) TYPE NO.

LINE No.	3 TYPE NUMBER	1 TYPE	2 MAT.	DWG. NO.	DESCRIPTION
	CURRENT-REGULATOR DIODE				
4	1C5297	1		u37	Ireg-1.1mA at 25V;V1im-1.2V max at I1im-8Ip min;Dynamic Imp .80Ω min (Pulse)
5	CIL1300	1		DO7	Current regulator;field effect Diode;Pd max 600mW at 75°C;Max reg I 800mA
6	CIL1301	1		DO7	Current regulator;field effect Diode;Pd max 600mW at 75°C;Max reg I 1.6mA
7	CIL1302	1		DO7	Current regulator;field effect Diode;Pd max 600mW at 75°C;Max reg I 2.6mA
8	CIL1303	1		DO7	Current regulator;field effect Diode;Pd max 600mW at 75°C;Max reg I 3.6mA
9	CIL1304	1		DO7	Current regulator;field effect Diode;Pd max 600mW at 75°C;Max reg I 4.6mA
10	CIL1305	1		DO7	Current regulator;field effect Diode;Pd max 600mW at 75°C;Max reg I 5.7mA
11	AAY60	1	Ge#	M500e	Regulator;VR max 20V;IF max 10mA;IF 100uA at VF200mV max
12	1N5283	1	Si	DO7	Pd-.6W;VF-100V max;Ireg-.22mA at V-25V;Vlim-1.0V max at Ilim-.72Ip.
13	1N5284	1	Si	DO7	Pd-.6W;VF-100V max;Ireg-.24mA at V-25V;Vlim-1.0V max at Ilim-.72Ip.
14	1N5285	1	Si	DO7	Pd-.6W;VF-100V max;Ireg-.27mA at V-25V;Vlim-1.0V max at Ilim-.72Ip.
15	1N5286	1	Si	DO7	Pd-.6W;VF-100V max;Ireg-.30mA at V-25V;Vlim-1.0V max at Ilim-.72Ip.
16	1N5287	1	Si	DO7	Pd-.6W;VF-100V max;Ireg-.33mA at V-25V;Vlim-1.0V max at Ilim-.72Ip.
17	1N5288	1	Si	DO7	Pd-.6W;VF-100V max;Ireg-.39mA at V-25V;Vlim-1.05V max at Ilim-.72Ip.
18	1N5289	1	Si	DO7	Pd-.6W;VF-100V max;Ireg-.43mA at V-25V;Vlim-1.05V max at Ilim-.72Ip.
19	1N5290	1	Si	DO7	Pd-.6W;VF-100V max;Ireg-.47mA at V-25V;Vlim-1.05V max at Ilim-.72Ip.
20	1N5291	1	Si	DO7	Pd-.6W;VF-100V max;Ireg-.56mA at V-25V;Vlim-1.1V max at Ilim-.72Ip.
21	1N5292	1	Si	DO7	Pd-.6W;VF-100V max;Ireg-.62mA at V-25V;Vlim-1.13V max at Ilim-.72Ip.
22	1N5293	1	Si	DO7	Pd-.6W;VF-100V max;Ireg-.68mA at V-25V;Vlim-1.15V max at Ilim-.721p
23	1N5294	1	Si	DO7	Pd-.6W;VF-100V max;Ireg-.75mA at V-25V;Vlim-1.2V max at Ilim-.72Ip.
24	1N5295	1	Si	DO7	Pd-.6W;VF-100V max;Ireg-.82mA at V-25V;Vlim-1.25V max at Ilim-.72Ip.
25	1N5296	1	Si	DO7	Pd-.6W;VF-100V max;Ireg-.91mA at V-25V;Vlim-1.29V max at Ilim-.72Ip.
26	1N5297	1	Si	DO7	Pd-.6W;VF-100V max;Ireg-1.0mA at V-25V;Vlim-1.35V max at Ilim-.72Ip.
27	1N5298	1	Si	DO7	Pd-.6W;VF-100V max;Ireg-1.1mA at V-25V;Vlim-1.4V max at Ilim-.72Ip.
28	1N5299	1	Si	DO7	Pd-.6W;VF-100V max;Ireg-1.2mA at V-25V;Vlim-1.45V max at Ilim-.72Ip.
29	1N5300	1	Si	DO7	Pd-.6W;VF-100V max;Ireg-1.3mA at V-25V;Vlim-1.5V max at Ilim-.72Ip.
30	1N5301	1	Si	DO7	Pd-.6W;VF-100V max;Ireg-1.4mA at V-25V;Vlim-1.55V max at Ilim-.72Ip.
31	1N5302	1	Si	DO7	Pd-.6W;VF-100V max;Ireg-1.5mA at V-25V;Vlim-1.6V max at Ilim-.72Ip.
32	1N5303	1	Si	DO7	Pd-.6W;VF-100V max;Ireg-1.6mA at V-25V;Vlim-1.65V max at Ilim-.72Ip.
33	1N5304	1	Si	DO7	Pd-.6W;VF-100V max;Ireg-1.8mA at V-25V;Vlim-1.75V max at Ilim-.72Ip.
34	1N5305	1	Si	DO7	Pd-.6W;VF-100V max;Ireg-2.0mA at V-25V;Vlim-1.85V max at Ilim-.72Ip.
35	1N5306	1	Si	DO7	Pd-.6W;VF-100V max;Ireg-2.2mA at V-25V;Vlim-1.95V max at Ilim-.72Ip.
36	1N5307	1	Si	DO7	Pd-.6W;VF-100V max;Ireg-2.4mA at V-25V;Vlim-2.0V max at Ilim-.72Ip.
37	1N5308	1	Si	DO7	Pd-.6W;VF-100V max;Ireg-2.7mA at V-25V;Vlim-2.15V max at Ilim-.72Ip.
38	1N5309	1	Si	DO7	Pd-.6W;VF-100V max;Ireg-3.0mA at V-25V;Vlim-2.25V max at Ilim-.72Ip.
39	1N5310	1	Si	DO7	Pd-.6W;VF-100V max;Ireg-3.3mA at V-25V;Vlim-2.35V max at Ilim-.72Ip.
40	1N5311	1	Si	DO7	Pd-.6W;VF-100V max;Ireg-3.6mA at V-25V;Vlim-2.5V max at Ilim-.72Ip.
41	1N5312	1	Si	DO7	Pd-.6W;VF-100V max;Ireg-3.9mA at V-25V;Vlim-2.6V max at Ilim-.72Ip.
42	1N5313	1	Si	DO7	Pd-.6W;VF-100V max;Ireg-4.3mA at V-25V;Vlim-2.75V max at Ilim-.72Ip.
43	1N5314	1	Si	DO7	Pd-.6W;VF-100V max;Ireg-4.7mA at V-25V;Vlim-2.9V max at Ilim-.72Ip.
44	1S1011	1	Si	A94	Limiter Diode:Pd 50mW max;VF .23V min,.35V max at 5mA;VFK 50mV min at 10uA
45	CIL250	1	Si	DO7	Current Regulator; Field Effect Diode; Pd max 600mW at 75°C; Max Regulator I 5.61mA
46	CIL251	1	Si	DO7	Current Regulator; Field Effect Diode; Pd max 600mW at 75°C; Max Regulator I 6.16mA
47	CIL252	1	Si	DO7	Current Regulator; Field Effect Diode; Pd max 600mW at 75°C; Max Regulator I 6.82mA
48	CIL253	1	Si	DO7	Current Regulator; Field Effect Diode; Pd max 600mW at 75°C; Max Regulator I 7.48mA
49	CIL254	1	Si	DO7	Current Regulator; Field Effect Diode; Pd max 600mW at 75°C; Max Regulator I 8.25mA
50	CIL255	1	Si	DO7	Current Regulator; Field Effect Diode; Pd max 600mW at 75°C; Max Regulator I 9.02mA
51	CIL256	1	Si	DO7	Current Regulator; Field Effect Diode; Pd max 600mW at 75°C; Max Regulator I 10.01mA
52	CIL257	1	Si	DO7	Current Regulator; Field Effect Diode; Pd max 600mW at 75°C; Max Regulator I 11.10mA
53	CIL350	1	Si	TO5	Current Regulator; Field Effect Diode; Pd max 1.5W at 25°C; Max Regulator I 12.1mA
54	CIL351	1	Si	TO5	Current Regulator; Field Effect Diode; Pd max 1.5W at 25°C; Max Regulator I 13.2mA
55	CIL352	1	Si	TO5	Current Regulator; Field Effecr Diode; Pd max 1.5W at 25°C; Max Regulator I 14.3mA
56	CIL353	1	Si	TO5	Current Regulator; Field Effect Diode; Pd max 1.5W at 25°C; Max Regulator I 16.5mA
57	CIL354	1	Si	TO5	Current Regulator; Field Effect Diode; Pd max 1.5W at 25°C; Max Regulator I 17.6mA
58	CIL355	1	Si	TO5	Current Regulator; Field Effect Diode; Pd max 1.5W at 25°C; Max Regulator I 19.8mA
59	CIL356	1	Si	TO5	Current Regulator; Field Effect Diode; Pd max 1.5W at 25°C; Max Regulator I 22mA
60	CIL357	1	Si	TO5	Current Regulator; Field Effect Diode; Pd max 1.5W at 25°C; Max Regulator I 24.2mA
61	CIL358	1	Si	TO5	Current Regulator; Field Effect Diode; Pd max 1.5W at 25°C; Max Regulator I 26.4mA
62	CIL359	1	Si	TO5	Current Regulator; Field Effect Diode; Pd max 1.5W at 25°C; Max Regulator I 29.7mA
63	CIL360	1	Si	TO5	Current Regulator; Field Effect Diode; Pd max 1.5W at 25°C; Max Regulator I 33mA
64	CIL361	1	Si	TO5	Current Regulator; Field Effect Diode; Pd max 1.5W at 25°C; Max Regulator I 36.3mA
65	CIL362	1	Si	TO5	Current Regulator; Field Effect Diode; Pd max 1.5W at 25°C; Max Regulator I 39.6mA
66	CIL363	1	Si	TO5	Current Regulator; Field Effect Diode; Pd max 1.5W at 25°C; Max Regulator I 42.9mA
67	CIL364	1	Si	TO5	Current Regulator; Field Effect Diode; Pd max 1.5W at 25°C; Max Regulator I 47.3mA
68	CIL365	1	Si	TO5	Current Regulator; Field Effect Diode; Pd max 1.5W at 25°C; Max Regulator I 51.7mA
69	CIL366	1	Si	TO5	Current Regulator;Field Effect Diode;Pdmax 1.5W at 25°C;Max Regulator I 56.1mA
70▼	CIL500/022	1	Si	M1354	Current regulator;field effect Diode;Pd max 1.5W at 25°A;Max reg I 242uA
71▼	CIL500/024	1	Si	M1354	Current regulator;field effect Diode;Pd max 1.5W at 25°A;Max reg I 264uA
72▼	CIL500/027	1	Si	M1354	Current regulator;field effect Diode;Pd max 1.5W at 25°A;Max reg I 297uA
73▼	CIL500/030	1	Si	M1354	Current regulator;field effect Diode;Pd max 1.5W at 25°A;Max reg I 330uA
74▼	CIL500/033	1	Si	M1354	Current regulator;field effect Diode;Pd max 1.5W at 25°A;Max reg I 363uA
75▼	CIL500/039	1	Si	M1354	Current regulator;field effect Diode;Pd max 1.5W at 25°A;Max reg I 429uA
76▼	CIL500/043	1	Si	M1354	Current regulator;field effect Diode;Pd max 1.5W at 25°A;Max reg I 473uA
77▼	CIL500/047	1	Si	M1354	Current regulator;field effect Diode;Pd max 1.5W at 25°A;Max reg I 517uA
78▼	CIL500/056	1	Si	M1354	Current regulator;field effect Diode;Pd max 1.5W at 25°A;Max reg I 616uA
79▼	CIL500/062	1	Si	M1354	Current regulator;field effect Diode;Pd max 1.5W at 25°A;Max reg I 682uA
80▼	CIL500/068	1	Si	M1354	Current regulator;field effect Diode;Pd max 1.5W at 25°A;Max reg I 748uA
81▼	CIL500/075	1	Si	M1354	Current regulator;field effect Diode;Pd max 1.5W at 25°A;Max reg I 825uA
82▼	CIL500/082	1	Si	M1354	Current regulator;field effect Diode;Pd max 1.5W at 25°A;Max reg I 902uA
83▼	CIL500/091	1	Si	M1354	Current regulator;field effect Diode;Pd max 1.5W at 25°A;Max reg I 1.00mA
84▼	CIL500/100	1	Si	M1354	Current regulator;field effect Diode;Pd max 1.5W at 25°A;Max reg I 1.10mA
85▼	CIL500/110	1	Si	M1354	Current regulator;field effect Diode;Pd max 1.5W at 25°A;Max reg I 1.21mA
86▼	CIL500/120	1	Si	M1354	Current regulator;field effect Diode;Pd max 1.5W at 25°A;Max reg I 1.32mA
87▼	CIL500/130	1	Si	M1354	Current regulator;field effect Diode;Pd max 1.5W at 25°A;Max reg I 1.43mA
88▼	CIL500/140	1	Si	M1354	Current regulator;field effect Diode;Pd max 1.5W at 25°A;Max reg I 1.54mA
89▼	CIL500/150	1	Si	M1354	Current regulator;field effect Diode;Pd max 1.5W at 25°A;Max reg I 1.65mA
90▼	CIL500/160	1	Si	M1354	Current regulator;field effect Diode;Pd max 1.5W at 25°A;Max reg I 1.76mA
91▼	CIL500/180	1	Si	M1354	Current regulator;field effect Diode;Pd max 1.5W at 25°A;Max reg I 1.98mA
92▼	CIL500/200	1	Si	M1354	Current regulator;field effect Diode;Pd max 1.5W at 25°A;Max reg I 2.20mA
93▼	CIL500/220	1	Si	M1354	Current regulator;field effect Diode;Pd max 1.5W at 25°A;Max reg I 2.42mA
94▼	CIL500/240	1	Si	M1354	Current regulator;field effect Diode;Pd max 1.5W at 25°A;Max reg I 2.64mA
95▼	CIL500/270	1	Si	M1354	Current regulator;field effect Diode;Pd max 1.5W at 25°A;Max reg I 2.97mA
96▼	CIL500/300	1	Si	M1354	Current regulator;field effect Diode;Pd max 1.5W at 25°A;Max reg I 3.30mA
97▼	CIL500/330	1	Si	M1354	Current regulator;field effect Diode;Pd max 1.5W at 25°A;Max reg I 3.63mA
98▼	CIL500/360	1	Si	M1354	Current regulator;field effect Diode;Pd max 1.5W at 25°A;Max reg I 3.96 mA
99▼	CIL500/390	1	Si	M1354	Current regulator;field effect Diode;Pd max 1.5W at 25°A;Max reg I 4.29mA
100▼	CIL500/430	1	Si	M1354	Current regulator;field effect Diode;Pd max 1.5W at 25°A;Max reg I 4.73mA
101▼	CIL500/470	1	Si	M1354	Current regulator;field effect Diode;Pd max 1.5W at 25°A;Max reg I 5.17mA
102▼	CIL500/510	1	Si	M1354	Current regulator;field effect Diode;Pd max 1.5W at 25°A;Max reg I 5.61mA
103▼	CIL500/560	1	Si	M1354	Current regulator;field effect Diode;Pd max 1.5W at 25°A;Max reg I 6.16 mA
104▼	CIL500/620	1	Si	M1354	Current regulator;field effect Diode;Pd max 1.5W at 25°A;Max reg I 6.82mA
105▼	CIL500/680	1	Si	M1354	Current regulator;field effect Diode;Pd max 1.5W at 25°A;Max reg I 7.48mA
106	CR022	1	Si	TO18	Current Regulator Diode;IF 220uA;VL 1.0;2 Lead TO 18
107	CR024	1	Si	TO18	Current Regulator Diode;IF 240uA;VL 1.0;2 Lead TO 18
108	CR027	1	Si	TO18	Current Regulator Diode;IF 270uA;VL 1.0;2 Lead TO 18
109	CR030	1	Si	TO18	Current Regulator Diode;IF 300uA;VL 1.0;2 Lead TO 18
110	CR033	1	Si	TO18	Current Regulator Diode;IF 330uA;VL 1.0;2 Lead TO 18

LINE No.	3 TYPE NUMBER	1 TYPE	2 MAT.	DWG. NO.	DESCRIPTION
1	CR039	1	Si	TO18	Current Regulator Diode;IF 390uA;VL 1.05;2 Lead TO 18
2	CR043	1	Si	TO18	Current Regulator Diode;IF 430uA;VL 1.05;2 Lead TO 18
3	CR047	1	Si	TO18	Current Regulator Diode;IF 470uA;VL 1.10;2 Lead TO 18
4	CR056	1	Si	TO18	Current Regulator Diode;IF 560uA;VL 1.20;2 Lead TO 18
5	CR062	1	Si	TO18	Current Regulator Diode;IF 620uA;VL 1.30;2 Lead TO 18
6	CR068	1	Si	TO18	Current Regulator Diode;IF 680uA;VL 1.15;2 Lead TO 18
7	CR075	1	Si	TO18	Current Regulator Diode;IF 750uA;VL 1.20;2 Lead TO 18
8	CR082	1	Si	TO18	Current Regulator Diode; IF 820uA; VL 1.25; 2 Lead TO 18
9	CR091	1	Si	TO18	Current Regulator Diode; IF 910uA; VL 1.29; 2 Lead TO 18
10	CR100	1	Si	TO18	Current Regulator Diode; IF 1.0mA; VL 1.35; 2 Lead TO 18
11▼	CR110#C	1	Si	TO18	Current Regulator Diode; IF 1.1mA; VL 1.40; 2 Lead TO 18
12	CR120	1	Si	TO18	Current Regulator Diode; IF 1.2mA; VL 1.45; 2 Lead TO 18
13	CR130	1	Si	TO18	Current Regulator Diode; IF 1.3mA; VL 1.50; 2 Lead TO 18
14	CR140	1	Si	TO18	Current Regulator Diode; IF 1.4mA; VL 1.55; 2 Lead TO 18
15	CR150	1	Si	TO18	Current Regulator Diode; IF 1.5mA; VL 1.60; 2 Lead TO 18
16	CR160	1	Si	TO18	Current Regulator Diode; IF 1.6mA; VL 1.65; 2 Lead TO 18
17	CR180	1	Si	TO18	Current Regulator Diode; IF 1.8mA; VL 1.75; 2 Lead TO 18
18	CR200	1	Si	TO18	Current Regulator Diode; IF 2.0mA; VL 1.85; 2 Lead TO 18
19	CR220	1	Si	TO18	Current Regulator Diode; IF 2.2mA; VL 1.95; 2 Lead TO 18
20	CR240	1	Si	TO18	Current Regulator Diode; IF 2.4mA; VL 2.00; 2 Lead TO 18
21	CR270	1	Si	TO18	Current Regulator Diode; IF 2.7mA; VL 2.15; 2 Lead TO 18
22	CR300	1	Si	TO18	Current Regulator Diode; IF 3.0mA; VL 2.25; 2 Lead TO 18
23	CR330	1	Si	TO18	Current Regulator Diode; IF 3.3mA; VL 2.35; 2 Lead TO 18
24	CR360	1	Si	TO18	Current Regulator Diode; IF 3.6mA; VL 2.50; 2 Lead TO 18
25	CR390	1	Si	TO18	Current Regulator Diode; IF 3.9mA; VL 2.60; 2 Lead TO 18
26	CR430	1	Si	TO18	Current Regulator Diode; IF 4.3mA; VL 2.75; 2 Lead TO 18
27	CR470	1	Si	TO18	Current Regulator Diode; IF 4.7mA; VL 2.90; 2 Lead TO 18
28	J552	1	Si	TO92	Current Regulator Diode;IF 770uA;VL 1.5;Vop 100Vmax;2 Lead TO 92
29	J553	1	Si	TO92	Current regulator Diode; IF 0.5mA; VL 1.3; Vop 50V Max; 2 Lead TO 92
30	J554	1	Si	TO92	Current regulator Diode; IF 1.0mA; VL 1.7; Vop 50V Max; 2 Lead TO 92
31	J555	1	Si	TO92	Current regulator Diode; IF 2.0mA; VL 2.1; Vop 50V Max; 2 Lead TO 92
32	J556	1	Si	TO92	Current regulator Diode; IF 3.0mA; VL 2.6; Vop 50V Max; 2 Lead TO 92
33	J557	1	Si	TO92	Current regulator Diode; IF 4.5mA; VL 3.0; Vop 50V Max; 2 Lead TO 92
34	MCL1300	1	Si	A1cy	Field Eff. Cur. Limiter-Nom Pinch Off Cur. .50;Test Volt 25V;PoV 75V.
35	MCL1301	1	Si	A1cy	Field Eff. Cur. Limiter-Nom Pinch Off Cur. 1.0;Test Volt 25V;PoV 75V.
36	MCL1302	1	Si	A1cy	Field Eff. Cur. Limiter-Nom Pinch Off Cur. 2.0;Test Volt 25V;PoV 75V.
37	MCL1303	1	Si	A1cy	Field Eff. Cur. Limiter-Nom Pinch Off Cur. 3.0;Test Volt 25V;PoV 75V.
38	MCL1304	1	Si	A1cy	Field Eff. Cur. Limiter-Nom Pinch Off Cur. 4.0;Test Volt 25V;PoV 75V.
LOGARITHMIC-CONVERSION DIODE					
42	IS002	2		TO18	Log Diode;VF 380mVtyp at 10nA;VFS 180mV at 10nA;Oper Temp.-25 to 75
43	IS003	2		TO18	Dual Log Diode;Com Ka;VF380mVtyp at 10nA;VFS 180mV at 10nA;Oper Temp -25 to 75
44	LD107	2	Si	DO7	Three decade skew from theoretical (IF 10uA to 10000uA max) 10mV.
45	LD107A	2	Si	DO7	Three decade skew from theoretical (IF 10uA to 10000uA max) 5mV.
46	LD107B	2	Si	DO7	Three decade skew from theoretical (IF 10uA to 10000uA max) 2.5V.
47	LD3029	2	Si	DO7	ΔV/F/Decade 77mV;Tolerance ± 10mV.
48	LD3029A	2	Si	DO7	ΔV/F/Decade 77mV;Tolerance ± 5.0mV.
49	LD3029B	2	Si	DO7	ΔV/F/Decade 77mV;Tolerance ± 2.0mV.
50	PS5570	2	Si	DO14	Log:6 Dec.if;100pA 100uA;Vf at 100pA-60mV;Vf at 100uA-530mV;ΔVf/Dec 68mV ±5%.
51	PS5830	2	Si	DO14	Log:4 Dec.if;100pA 1uA;Vf at 100pA-60mV;Vf at 1uA-380mV;ΔVf/Dec 68mV ±5.0%.
52	PS5831	2	Si	DO14	Log:7 Dec.if;10pA-100uA;Vf at 10pA 5.0mV;Vf at 100uA-530mV;ΔVf/Dec 68mV ± 5%.
53	PS5832B	2	Si	DO14	Log:8 Dec.if;10pA 1.0mA;Vf at 10pA-5.0mV;Vf at 1.0mA-650mV;ΔVf/Dec 68mV ± 5%.
54	V72	2	Si	A1fq	Varistor Log Char. from .10uA to 100mA;I(mA)-e to the 26(E-59) power
MATCHED DIODE CONFIGURATION					
58	1SV55	3		TO92	Auto Tuning;VBR -32V at -10uA;IR -50n at -30V;C 42pF;n 2.5 min;Q 200
59	ID100	3		TO78	Monolithic Dual Diodes;Pd 300mW,Vr 30V;IF 20mA;VF 1.1V max at 10mA
60	ID101	3		TO71	Monolithic Dual Diodes;Pd 300mW,Vr 30V;IF 20mA;VF 1.1V max at 10mA
61	AAY43	3	Ge☑	M458	Diode quad arranged as ring modulator;Vr-25Veach;VF-.58V at IF-10ma.
62	1N3558	3	Si	A1	Matched Pair of 1N751A;VZ 10.3V±3%;Temp.Coeff 0.02%/°C max;Dyn.Imp 40Ω.
63	DE100	3	Si	u41	Diode Bridge;VBR 75V;IR 10uA at 60V
64	DF100	3	Si	u41a	Diode Bridge;VBR 75V;IR 10uA at 60V
65	DI914-1B	3	Si	u40a	Diode Bridge;VF 30V;VBR 75V;IR .010uA AT 60V
66	DI914-1Q	3	Si	u40	Diode Bridge;VF 30V;VBR 75V;IR .025 uA at 65 V
67	DI914-1QM	3	Si	u40	Diode Quad;4 independent matched;If 20mA;Ct 3pf;trr 50nSec
68	DI914-2B	3	Si	u40a	Diode Bridge;VF 30V;VBR 60V;IR .010uA at 50V
69	DI914-2Q	3	Si	u40	Diode Bridge;VF 30V;VBR 60V;IR .025uA at 50V
70	DI914-2QM	3	Si	u40	Diode Quad;4 independent matched;If 20mA;Ct 3pf;trr 50nSec
71	DI914-3B	3	Si	u40a	Diode Bridge;VF 30V;VBR 45V;IR .025 uA at 35V
72	DI914-3Q	3	Si	u40	Diode Bridge;VF 30V;VBR 45V;IR .025uA at 35 V
73	DI914-3QM	3	Si	u40	Diode Quad;4 independent matched;If 20mA;Ct 3pf;trr 50nSec
74	FA2320	3	Si	M168	Pair;VF match 3.0mV;trr 50nsec;VBR 150V;Cap 5.0pf.
75	FA2330	3	Si	M168	Pair;VF match 10mV;Ir match 2.0nA;VBR 125V;Cap 6.0pf.
76	FA4320	3	Si	M169	Quad;VF match 3.0mV;trr 10nsec;VBR 150V;Cap 5.0pf.
77	FA4330	3	Si	M169	Quad;VF match 10mV;Ir match 2.0nA;VBR 125V;Cap 6.0pf.
78	ZDX1F	3	Si	M984	VRRM 15V;If (AV) 250 mA;Ptot 375 mW;VF max 1.5V at 250mA
79	ZDX1R	3	Si	M984a	VRRM 15V;If (AV) 250 mA;Ptot 375 mW;VF max 1.5V at 250mA
80	ZDX2F	3	Si	M984	VRRM 30V;If (AV) 250 mA;Ptot 375 mW;VF max 1.5V at 250mA
81	ZDX2R	3	Si	M984a	VRRM 30V;If (AV) 250 mA;Ptot 375 mW;VF max 1.5V at 250mA
82	ZDX3F	3	Si	M984	VRRM 50V;If (AV) 250 mA;Ptot 375 mW;VF max 1.4V at 200mA
83	ZDX3R	3	Si	M984a	VRRM 50V;If (AV) 250 mA;Ptot 375 mW;VF max 1.4V at 200mA
84	ZDX4F	3	Si	M984	VRRM 100V;If (AV) 250 mA;Ptot 375 mW;VF max 1.4V at 200mA
85	ZDX4R	3	Si	M984a	VRRM 100V;If (AV) 250 mA;Ptot 375 mW;VF max 1.4V at 200mA
86	ZDX5	3	Si	M984b	VRRM 30V;If (AV) 250 mA;Ptot 375 mW;VF max 1.3V at 100mA
87	ZDX6	3	Si	M984b	VRRM 70V;If (AV) 250 mA;Ptot 375 mW;VF max 1.3V at 100mA
88	HP5082-9394	3	Si♦	A329	Quad Double Bal Mixer for 4.0 to 8.0GHz;CT .35pf,ΔCT .10pf;VF .40V,ΔVF 20mV;Rs 7.0Ω
89	BAW64	3	Si#	M713	Common Cathode Diode pair;VRWM 60V max;IF max 200mA;trr(max)4ns at IF 10mA;VR 5V;RL 50Ω.
90	BAW65	3	Si#	M713	Common Cathode Diode pair;VRWM 30V max;IF max 200mA;trr(max)4ns at IF 10mA;VR 5V;RL 50Ω.
91	BAW66	3	Si#	M713	Common Anode Diode pair;VRWM 30V max;IF max 200mA;trr(max)4ns at IF 10mA;VR 5V;RL 50Ω.
92	BAW67	3	Si#	M713	Common Cathode Diode pair;VRWM 15V max;IF max 200mA;trr(max)4ns at IF 10mA;VR 5V;RL50Ω.
93	BAW68	3	Si#	M713	Common Anode Diode pair;VRWM 15V max;IF max 200mA;trr(max)4ns at IF 10mA;VR 5V;RL 50Ω.
NOISE-GENERATOR DIODE					
97	CND1001A	4		DO7	White Noise Diode;BW 10Hz-20kHz;Vz 14V±20%;50uA typ Zenner Current;RL 10kΩ
98	CND1002A	4		DO7	White Noise Diode;BW 10Hz-100kHz;Vz 14V±20%;50uA typ Zenner Current;RL 10kΩ
99	CND2001A	4		DO7	White Noise Diode;BW 100kHZ-2MHz;Vz 14V±20%;50uA typ Zenner Current;RL 10kΩ
100	CND2002A	4		DO7	White Noise Diode;BW 2MHz-10MHz;Vz 14V±20%;50uA typ Zenner Current;RL 10kΩ
101	CND3001A	4		DO7	White Noise Diode;BW 30MHz-100MHz;Vz 8V±20%;1.5mA typ Zenner Current;RL50Ω
102	CND3002A	4		DO7	White Noise Diode;BW 100MHz-200MHz;Vz 8V±20%;5.0mA typ Zenner Current;RL 50Ω
103	CND4001A	4		DO7	White Noise Diode;BW 200MHz-400MHz;Vz 8V±20%;5.0mA typ Zenner Current;RL 50Ω
104	CND6001A	4		DO7	White Noise Diode;B.W.10HZ;VZ 8V 20%;50uA typ Zenner Current;RL600Ω
105	CND6002A	4		DO7	White Noise Diode;B.W.10HZ-100KHZ;VZ 8V 20%;50uA typ Zenner Current;RL600Ω
106	CND6003A	4		DO7	White Noise Diode;B.W.10HZ-500KHZ;VZ 8V 20%;50uA typ Zenner Current;RL600Ω
107	CND6004A	4		DO7	White Noise Diode;B.W.20HZ-5MHZ;VZ 8V 20%;1.0mA typ Zenner Current;RL600Ω
108	CND6005A	4		DO7	White Noise Diode;B.W.20Hz-10MHZ;VZ 8V 20%;1.0mA typ Zenner Current;RL600Ω
109	CND6006A	4		DO7	White Noise Diode;B.W.20HZ-25MHZ;VZ 8V 20%;1.0mA typ Zenner Current;RL600Ω
110	CND6007A	4		DO7	White Noise Diode;B.W.20HZ-100MHZ;VZ 8V 20%;1.5mA typ Zenner Current;RL600Ω

IN ORDER OF (1) TYPE (2) MAT AND (3) TYPE NO.

LINE No.	3 TYPE NUMBER	1 TYPE	2 MAT.	DWG. NO.	DESCRIPTION
1	CND6008A	4		DO7	White Noise Diode;B.W.1KHZ-300MHZ;VZ 8V 20%;5.0mA typ Zenner Current;RL600-
2	CND6009A	4		DO7	White Noise Diode;B.W.1KHZ-500MHZ;VZ 8V 20%;5.0mA typ Zenner Current;RL600Ω
3	CND6010A	4		DO7	White Noise Diode;B.W.1KHZ-500MHZ;VZ 8V 20%;5.0mA typ Zenner Current;RL600Ω
4	CND6011A	4		DO7	White Noise Diode;B.W.1KHZ-1.2GHZ;VZ 8V 20%;5.0mA typ Zenner Current;RL600Ω
5	CND6012A	4		DO7	White Noise Diode;B.W.1KHZ-1.2GHZ;VZ 8V 20%;5.0mA typ Zenner Current;RL600Ω
6	CNM5A	4		M1014	White Noise Module;B.W.10Hz-25kHz; Noise Out Per B.W. 5mV;RL 600Ω
7	CNM5B	4		M1014	White Noise Module; B.W.10Hz- 100kHz;Noise Out Per B.W.5mV; RL600Ω
8	CNM5C	4		M1014a	White Noise Module;B.W. 10Hz-500kHz;Noise Out Per B.W. 5mV;RL600Ω
9	CNM5D	4		M1014a	White Noise Module;B.W. 10Hz-1MHz;Noise Out Per B.W. 5mV;RL 600Ω
10	CNM5E	4		M1014a	White Noise Module; B.W. 10Hz-3MHz; Noise Out Per B.W. 5mV; RL 600Ω
11	CNM5EN	4		M1014a	White Noise Module; B.W. 100kHz-3MHz; Noise Out Per B.W. 5mV; RL 600Ω
12	CNM10A	4		M1014	White Noise Module;B.W.10Hz-25kHz;Noise Out Per B.W.10mV;RL 600Ω
13	CNM10B	4		M1014	White Noise Module;B.W. 10Hz-100kHz;Noise Out Per B.W. 10mV;RL 600ΩΩ
14	CNM10C	4		M1014a	White Noise Module;B.W. 10Hz-500kHz;Noise Out Per B.W. 10mV;RL 600Ω
15	CNM10D	4		M1014a	White Noise Module; B.W. 10Hz-1MHz; Noise Out Per B.W. 10mV; RL 600Ω
16	CNM10E	4		M1014a	White Noise Module; B.W. 10Hz-3MHz; Noise Out Per B.W. 10mV; RL 600Ω
17	CNM10EN	4		M1014a	White Noise Module; B.W. 100kHz-3MHz; Noise Out Per B.W. 10mV; RL 600Ω
18	CNM20A	4		M1014	White Noise Module;B.W.10Hz-25kHz; Noise Out Per B.W.20mV;RL600Ω
19	CNM20B	4		M1014	White Noise Module;B.W. 10Hz-100kHz;Noise Out Per B.W. 20mV;RL 600Ω7
20	CNM20C	4		M1014a	White Noise Module;B.W. 10Hz-500kHz;Noise Out Per B.W. 20mV;RL 600Ω
21	CNM20D	4		M1014a	White Noise Module; B.W. 10Hz-1MHz; Noise Out Per B.W. 20mV; RL 600Ω
22	CNM20E	4		M1014a	White Noise Module; B.W. 10Hz-3MHz; Noise Out Per B.W. 20mV; RL 600Ω
23	CNM20EN	4		M1014a	White Noise Module;B.W. 100kHz-3MHz;Noise Out Per B.W. 20mV;RL 600Ω
24	CNM50A	4		M1014	White Noise Module;B.W. 10Hz- 25kHz; Noise Out Per B.W.50mV;RL600Ω
25	CNM50B	4		M1014	White Noise Module;B.W. 10Hz-100kHz;Noise Out Per B.W. 50MV;RL 600Ω
26	CNM50C	4		M1014a	White Noise Module;B.W. 10Hz-500kHz;Noise Out Per B.W. 50mV;RL 600Ω
27	CNM50D	4		M1014a	White Noise Module; B.W. 10Hz-1MHz; Noise Out Per B.W. 50mV;RL 600Ω
28	CNM50E	4		M1014a	White Noise Module; B.W. 10Hz-3MHz; Noise Out Per B.W. 50mV; RL 600Ω
29	CNM50EN	4		M1014a	White Noise Module;BW 100kHZ-3MHz;Noise Out Per B.W.50mV;RL600Ω
30	CNM100A	4		M1014	White Noise Module;B.W.10Hz-25kHz; Noise Out Per B.W. 100mV;RL600Ω
31	CNM100B	4		M1014a	White Noise Module;B.W. 10Hz-100kHz;Noise Out Per B.W. 100mV;RL 600Ω
32	CNM100C	4		M1014a	White Noise Module;B.W. 10Hz-500kHz;Noise Out Per B.W. 100mV;RL 600Ω
33	CNM100D	4		M1014a	White Noise Module; B.W. 10Hz-1MHz; Noise Out Per B.W. 100mV; RL 600Ω
34	CNM100E	4		M1014a	White Noise Module; B.W. 10Hz-3MHz; Noise Out Per B.W. 100mV; RL 600Ω
35	CNM100EN	4		M1014a	White Noise Module;B.W.100kHZ-3MHZ;Noise Out Per B.W.100mV;RL600Ω
36	CNM1000A	4		M1014a	White Noise Module;B.W. 10Hz-25kHz; Noise Out Per B.W. 1.0V; RL600Ω

SCHOTTKY-BARRIER DIODE

40	1SS166(A)	5		A441	VR 10V; IO(Ave) 15mA; IR max 10uA; VF max 0.6V at IF 10mA; Cap 1.2pF at VR OV
41	BYV21-30	5		DO4	High Efficiency;Vrrm 36V;If(AV)28A;VF 0.55V;VR 30V,TJ 125C;IFSM 600A
42	BYV21-45	5		DO4	High Efficiency;Vrrm 54V;IF(AV)28A;VF 0.55V;VR 45V;TJ 125C;IFSM 600A
43	TH6952	5		u43*	VF 0.5V at IF 1.0mA Dual Schottky Diode
44	THD6916	5		u42a	VBR 40V IR 10uA,VF(max)0.47V at IF 10mA,VR 20V;IR 200nA,Cap 5.0pF, Schottky Diode
45♦	THD6919	5		u42b	VBR50VIR10uA,VF(max)0.8 at IF 10mA,IR200nA at VR20V, Cap 1.0pF Schoitky Diode
46	THD6924	5		u42c	VBR 70V IR 10uA,VF(max)0.75V at IF 10mA,IR 200nA at VR 50V,Cap 1.7pF Schottky Diode
47	15SB04M	5	♦	M1144	Schottky Barrier;VRRM 40V;IF 15A;Trr 50ns at IF 5.0A
48	20CS04M	5	♦	M1144	Schottky Barrier;VRRM 40V;Io 20A;Trr 50ns at IF 5.0A
49	BYV19-30	5	♦	DO220	Vrrm 30V;IF(av) 10A;IFSM 200A
50	BYV19-35	5	♦	DO220	VrrM 35V;IF(av) 10A;IFSM 200A
51	BYV19-40	5	♦	DO220	Vrrm 40V;IF(av) 10A;IFSM 200A
52	BYV19-45	5	♦	DO220	Vrrm 45V;IF(av) 10A;IFSM 200A
53	BYV20-45	5	♦	DO4	Vrrm 45V;IF(av) 15A;IFSM 300A
54	BYV22-45	5	♦	TO220	Vrrm 45V;IF(av) 50A;IFSM 800A
55	BYV33-30	5	♦	TO220	Vrrm 30V;IF(av) 20A;IFSM 300A
56	BYV33-35	5	♦	TO220	Vrrm 35V;IF(av) 20A;IFSM 300A
57	BYV33-40	5	♦	TO220	Vrrm 40V;IF(av) 20A;IFSM 300A
58	BYV33-45	5	♦	TO220	Vrrm 45V;IF(av) 20A;IFSM 300A
59	MS8111	5	♦		VBR 5.0V;VF .40VatIF 1.0mA max;IF 20mA at VF 1.0VDC min;IR 200nA
60	MS8121	5	♦		VBR 5.0V;VF .40VatIF 1.0mA max;IF 35mA at VF 1.0VDC min;IR 200nA
61	MS8211	5	♦		VBR 5.0V;VF .40V at IF 1.0mA max;IF 20mA at VF 1.0VDC min; IR 200nA
62	MS8221	5	♦		VBR 10V;VF .40V at IF 1.0mA max;IF 35mA at VF 1.0VDC min;IR 200nA
63	MS8311	5	♦		VBR 20V;VF .40V at IF 1.0mA max;IF 20mA at VF 1.0VDC min;IR 200nA
64	MS9010	5	♦	E204a	P-N Med Pwr Schotky; IF 500mA;IFSM 3.0A; VBR 10V;Pd 400mWV;O
65	MS9020	5	♦	E204a	P-N Med Pwr Schotky; IF 500mA;IFSM 3.0A; VBR 20V;Pd 400mW
66	MS9030	5	♦	E204a	P-N Med Pwr Schotky; IF 500mA;IFSM 3.0A; VBR 30V;Pd 400mW
67	MS9040	5	♦	E204a	P-N Med Pwr Schotky; IF 500mA;IFSM 3.0A; VBR 40V; Pd 400mW
68	MS9070	5	♦	E204a	P-N Med Pwr Schotky; IF 500mA;IFSM 3.0A; VBR 70V;Pd 400mW
69	SSP820	5	♦	DO4	VBR 20V;IF 8.0A;VF 400mA at 1.0A;IR 4.0mA at 10V
70	SSP830	5	♦	DO4	VBR 30V;IF 8.0A;VF 400mV at 1.0A;IR 4.0mA at 15V
71	SSP840	5	♦	DO4	VBR 40V;IF 8.0A;VF 400mV at 1.0A;IR 4.0mA at 20V
72	SSP1520	5	♦	DO4	VBR20V;If15A;Vf450mvat8.0A;Ir75mAat20V
73	SSP1530	5	♦	DO4	VBR30V;If15A;Vf450mvat8.0A;Ir75mAat30V
74	SSP1540	5	♦	DO4	VBR40V;If15A;Vf450mvat8.0A;Ir75mAat40V
75	SSP3020	5	♦	DO4	VBR20V;at10mA;If30A;Vf1.1VmaxatIf90A;Ir75mAat20V125°c
76	SSP3030	5	♦	DO4	VBR30V;at10mA;If30A;Vf1.1VmaxatIf90A;Ir75mAat30V125°c
77	SSP3040	5	♦	DO4	VBR40V;at10mA;If30A;Vf1.1VmaxatIf90A;Ir75mAat40V125°c
78	1N5165	5	Si	A1ac	Pt-125mW;Burnout-5.0Ergs;VF-1.0V at If-50mA;BV-30V;IR-300nA;Co-1.0pf.
79	1N5166	5	Si	A1ac	Pt-125mW;Burnout-5.0Ergs;VF-1.0V at If-35mA;BV-30V;IR-300nA;Co-1.0pf.
80	1N5167	5	Si	A1ac	Pt-125mW;Burnout-5.0Ergs;VF-1.0V at If-35mA;BV-20V;IR-500nA;Co-1.0pf.
81	1SS88	5	Si	DO35	CATV Balanced MX;IR -10uA Max at -10V;VF 600mV Max at 10mA;C 1.2pf
82	5CS04SM	5	Si	M1292	Power Schottky; Common Cathode; VRRM 40V; IF 5A; Isolated Package
83	10CS04SM	5	Si	M1292	Power Schottky; Common Cathode; VRRM 40V; IF 10A; Isolated Package
84	A2S024	5	Si	u26	Switching Diode Chip;Sw Speed 100p Sec max;VBR 70V;IF 15mA;VF .41V at 1.0mA;Co 1.7pf
85	A2S087	5	Si	u25	Switching Diode Chip;Sw Speed 100p Sec max;VBR 20V;IF 35mA;VF .41V at 1.0mA;Co 1.1pf
86	A2S097	5	Si	u25	Switching Diode Chip;Sw Speed 100p Sec max;VBR 15V;IF 20mA;VF .41V at 1.0mA;Co 1.1pf
87	A2S302	5	Si	A1ah	Switching;CTO 1.0pf;VB 30V;IF 35mA.
88	A2S303	5	Si	A1ah	Switching;CTO 1.2pf;VB 20V;IF 35mA.
89	A2S305	5	Si	A1ah	Switching;CTO 1.0pf;VB 30V;IF 75mA.
90	BAR10	5	Si	A69ah	SCHOTTKY;VRRM 20V;IR .10uA at VR 15V;Cp 1.2pF
91	BAR11	5	Si	A69ah	SCHOTTKY;VRRM 15V;IR.10uA at VR 8.0V;Cp 1.2pF
92	BAR19	5	Si	A69ah	SCHOTTKY/VRRM 4.0V;IR .25uA atVR 3.0V;Cp1.0pF
93	BAR28	5	Si	A69ah	SCHOTTKY;VRRM 70V;IR .20uA at VR 50V;Cp 2.0pF
94	BAR43A	5	Si ♦	TO236	Dual;Com Anode;for HS SW;If 100mA;Pt200mW
95	BAR43C	5	Si ♦	TO236	Dual;Com Cathode;for HSSW;If 100mA;Pt200mW
96	BAR43S	5	Si ♦	TO236	Dual;Doubler config;for HSSW;If 100mA;pt200mW
97	BAT19	5	Si	A69ah	SCHOTTKY;VRRM 10V;IR .10uA at VR 5.0V;Cp 1.2pF
98	BAT29	5	Si	A69ah	SCHOTTKY;VRRM 5.0V;IR .05uA atVR 1.0V;Cp 1.0pF
99	BAT41	5	Si	DO35	VR-100V;VF-450mV at IF-1.0mA;IR-100nA at VR-50V;C-2.0pF at VR-1.0V;IFAV-100mA at Tamb-25°C
100	BAT42	5	Si	DO35	VR 30V;VF 400mV at IF 10mA;IR 500nA at VR 25V;C 5.0pF at VR .0V;IFAV 100mA at t amb 25°C
101	BAT43	5	Si	DO35	VR 30V;VF 450mV at IF 15mA;IR 500nA at VR 25V;C 5.0pF at VR 1.0V;IFAV 100mA at t amb 25°C
102	BAT45	5	Si	A69ah	SCHOTTKY;VRRM 15V;IR .10uA at VR 6.0V;Cp .80pF
103	BAT46	5	Si	A69ah	SCHOTTKY;VRRM 100V;IR 2.0uA atVR 50V;Cp 6.0pF
104	BAT47	5	Si	A69ah	SCHOTTKY;VRRM 20V;IR 4.0uA at VR 10V;Cp 24pF
105	BAT48	5	Si	A69ah	SCHOTTKY;VRRM 40V;IR 2.0uA at VR 10V;Cp 24pF
106	BYV10-20	5	Si	DO41	VR 20V;VF 550mV at IF 1.0A;IR 1.0mA at VR 20V;C 200pF at VR 0;IFAV 1.0A at t amb 60°C
107	BYV10-30	5	Si	DO41	VR 30V;VF 550mF at IF 1.0A;IR 1.0mA at VR 30V;C 200pF at VR 0;IFAV 1.0A at t amb 60°C
108	BYV10-40	5	Si	DO41	VR 40V;VF 550mV at IF 1.0A;IR 1.0mA at VR 40V;C 200pF at VR 0;IFAV 1.0A at t amb 60°C
109♦	MA700	5	Si	A1L	Schottky Barrier; Vr 10V;IF 30mA;Trr Ins at,IF-IR 10mA;RL100 Ω;CD 1.3pF at VR1V
110♦	MA701	5	Si	M990	Schottky Barrier; Vr 20V;IF 1A;IFSM 6A;Trr 14ns at IF-TR 100uA RL100Ω

IN ORDER OF (1) TYPE (2) MAT AND (3) TYPE NO.

LINE No.	3 TYPE NUMBER	1 TYPE	2 MAT.	DWG. NO.	DESCRIPTION
1	MS114	5	Si		IF-10mA at VF-1.0V;Ct-.80pf;PIV-10V at 10uA;Rs-35 ohms;Platinum Junction.
2	MS124	5	Si		IF-50mA at VF-1.0V;Ct-.80pf;PIV-10V at 10uA;Rs-10 ohms;Platinum Junction.
3	MS134	5	Si		IF-100mA at VF-1.0V;Ct-.80pf;PIV-10V at 10uA;Rs-3.5 ohms;Platinum Junction.
4	MS214	5	Si		IF-10mA at VF-1.0V;Ct-.80pf;PIV-20V at 10uA;Rs-35 ohms;Platinum Junction.
5	MS224	5	Si		IF-50mA at VF-1.0V;Ct-.80pf;PIV-20V at 10uA;Rs-10 ohms;Platinum Junction
6	MS314	5	Si		IF-10mA at VF-1.0V;Ct-.80pf;PIV-30V at 10uA;Rs-35 ohms;Platinum Junction.
7	MS324	5	Si		IF-50mA at VF-1.0V;Ct-.80pf;PIV-30V at 10uA;Rs-10 ohms;Platinum Junction.
8	MS334	5	Si		IF-100mA at VF-1.0V;Ct-.80pf;PIV-30V at 10uA;Rs-3.5 ohms;Platinum Junction.
9	MS514	5	Si		IF-10mA at VF-1.0V;Ct-.80pf;PIV-50V at 10uA;Rs-35 ohms;Platinum Junction.
10	MS524	5	Si		IF-50mA at VF-1.0V;Ct-.80pf;PIV-50V at 10uA;Rs-10 ohms;Platinum Junction.
11	PKK500	5	Si	A1ad	Max VF 400V at IF 1.0mA;Min IF 20mA at VF 1.0V;C to Max 1.0pf,Min Car Life 100ps.
12	PKK501	5	Si	A1ad	Max VF 400V at IF 1.0mA;Min IF 20mA at VF 1.0V;C to max 1.0pf;Min Car Life 100ps.
13	PKK502	5	Si	A1ad	Max VF 400V at IF 1.0mA;Min IF 20mA at VF 1.0V;C to max 1.0pf;Min Car Life 100ps.
14	PKK503	5	Si	A1ad	Max VF 400V at IF 1.0mA;Min IF 15mA at VF 1.0V;C to max 1.0pf;Min Car Life 100ps.
15	PKK504	5	Si	A1ad	Max VF 400V at IF 1.0mA;Min IF 15mA at VF 1.0V;C to max 1.0pf;Min Car Life 100ps.
16	SD31	5	Si	E203a	Power Schottky; for Industrial/Military Service; VRWM 50V; Temp 175°C max
17	SD32	5	Si	E203a	Power Schottky; for Industrial/Military Service; VRWM 40V; Temp 175°C max
18	SD71	5	Si	E203b	Power Schottky; Ratification Efficiency for Low Voltages at High Current; VRWM 50V
19	SD72	5	Si	E203b	Power Schottky; Ratification Efficiency for Low Voltages at High Current; VRWM 40V
20	SD75	5	Si	DO5	Power Schottky; Same as SD51 Reverse Over Current; Temp 150°C max
21	SD103A	5	Si	DO35	PIV 40V; Trr 10nS Max at IF IR 200mA to 0.1 IR; Tmax 125 J; VF 0.37 at IF 20mA; Pd 0.4 W
22	SD103B	5	Si	DO35	PIV 30V; Trr 10nS Max at IF IR 200mA to 0.1 IR; Tmax 125 J; VF 0.37 at IF 20mA; Pd 0.4 W
23	SD103C	5	Si	DO35	PIV 20V; Trr 10nS Max at IF IR 200mA to 0.1 IR; Tmax 125 J; VF 0.37 at IF 20mA; Pd 0.4 W
24	SD241	5	Si	TO3	Power Schottky; Common Cathode; Dual Schottky Diode
25	SD5171	5	Si	E203b	Power Schottky; Same as SD51 w/Flexible Anode Lead; Temp 150°C max
26	ZC2800	5	Si	A412	VBR 70V min;Max VF at 1mA 450mV;Ct 2.0pf max;Min.Minority Carrier Lifetime 100pS.
27	ZC2800E	5	Si	M500	VBR 70V Min;Max VF at 1.0mA 450mV;ct2.0pf;Min Minority Carrier Lifetime 100ps
28	ZC2800H	5	Si	A277q	VBR 70V Min;Max VF at 1.0mA 450mV;ct2.0pf;Min Minority Carrier Lifetime 100ps
29	ZC2810	5	Si	A412	VBR 20V min;Max VF at 1mA 450mV;Ct 1.2pf max;Min.Minority Carrier Lifetime 100pS.
30	ZC2810E	5	Si	M500	VBR 20V Min;Max VF at 1.0mA 450mV;ct1.2pf;Min Minority Carrier Lifetime 100ps
31	ZC2810H	5	Si	A277q	VBR 20V Min;Max VF at 1.0mA 450 mV;ct1.2pf;Min Minority Carrier Lifetime 100ps
32	ZC2811	5	Si	A412	VBR 15V min;Max VF at 1mA 450mV;Ct 1.2pf max;Min.Minority Carrier Lifetime 100pS.
33	ZC2811E	5	Si	M500	VBR 15V Min;Max VF at 1.0mA 450mV;ct1.2pf;Min Minority Carrier Lifetime 100ps
34	ZC2811H	5	Si	A277q	VBR 15V Min;Max VF at 1.0mA 450mV;ct1.2pf;Min Minority Carrier Lifetime 100ps
35	ZC5800	5	Si	A412	VBR 50V Min;Max VF at 1.0mA 450mV;ct2.0pf;Min Minority Carrier Lifetime 100ps
36	ZC5800E	5	Si	M500	VBR 50V Min;Max VF at 1.0mA 450mV;ct2.0pf;Min Minority Carrier Lifetime 100ps
37	ZC5800H	5	Si	A277q	VBR 70V Min;Max VF at 1.0mA 450mV;ct2.0pf;Min Minority Carrier Lifetime 100ps
38	FH1100	5	Si△	DO7	PD 100mW;VF .55V at 10mA;IR 1.0uA;BV 5V;Ct 1.0pF;NF 10db;Qs 1.6pC
39	1SS23	5	Si$	M1163	VRM 12V;IFM 150mA;Io 100mA;VF 1.0V at IF 50mA
40	1SS78	5	Si$	A1cz	VR 5.0V;IF 30mA;IF 15mA min at VF 0.5V
41	DSH6172	5	Si$	A1ak	VB 20V min;VF 1.0V max at 35mA;IR 500nA max at 15V;CT 1.2pF max at 0.0V
42	DSH6173	5	Si$	A1ak	VB 30V min;VF 1.0V max at 50mA;IR 300nA max at 15V;CT 1.0pF max at 0.0V
43	DSH6174	5	Si$	A1ak	VB 30V min;VF 1.0V max at 75mA;IR 300nA max at 15V;CT 1.0pF max at 0.0V
44	SD101A	5	Si♦	DO35	DIV 60V Max; Ptot 400mWw/Inf. Heatsink;Vf 410mV at 1.0mA
45	SD101B	5	Si♦	DO35	DIV 50V Max;Ptot 400mWw/Inf. Heatsink;Vf 400mV at 1.0mA
46	SD101C	5	Si♦	DO35	DIV 40V Max;Ptot 400mWw/Inf. Heatsink; Vf 390mV at 1.0mA
47	A2S800	5	Si#	A1ah	Switching;CTO 2pf;VB 70V;IF 15mA.
48	A2S807	5	Si#	A1ah	Switching;CTO 2.0pF;VB 40V;IF 15mA.
49	A2S810	5	Si#	A1ah	Switching;CTO 1.2pf;VB 20V;IF 35mA.
50	A2S811	5	Si#	A1ah	Switching;CTO 1.2pf;VB 15V;IF 20mA.
51	A2S813	5	Si#	M916a	Matched Bridge Quad A2S811;VF Match 20mV at 1.0 to 10mA
52	A2S814	5	Si#	M916	Matched Ring Quad A2S811;VF Match 20mV at 1.0 to 10mA
53	A2S815	5	Si#	A1ah	Matched Quad A2S811;VF Match 20mV at 1.0 to 10mA
54	A2S860	5	Si#	A1ah	Matched Pair A2S810;VF Match 20mV at 1.0 to 10mA
55	A2S862	5	Si#	A1ah	Matched Quad A2S860;VF Match 20mV at 1.0 to 10mA
56	A2S864	5	Si#	A1ah	Matched Pair A2S811;VF Match 20mV at 1.0 to 10mA
57	A2S900	5	Si#	A1ah	Switching;CTO 1.2pf;VB 10V;IF 20mA.
58	A2S912	5	Si#	A1ah	Matched Pair A2S900;VF Match 30mVmax at 1.0 to 10mA
59	A2S970	5	Si#	A1ah	Matched Quad A2S900;VF Match 20mV at 1.0 to 10mA
60♦	V8ZA05	5	ZnO	M936†	Vm 5.5V;Ipk 25.0A;Vclamp 30.0V at Ipk 2.0A; Ct 800 pf
61♦	V12ZA05	5	ZnO	M936†	Vm 8.0V;Ipk 50.0A;Vclamp 37.0V at Ipk 2.0A; Ct 600 pf
62♦	V18MA1B	5	ZnO	Alec	Vm 14v;Ipk 40A;Vclamp 44.V at Ipk 2.A; Ct 550 pf
63♦	V18ZA05	5	ZnO	M936†	Vm 14.0V;Ipk 50.0A;Vclamp 44.0V at Ipk 2.0A; Ct 500 pf
64♦	V18ZA40	5	ZnO	M936†	Vm 14.0V;Ipk 2000.0A;Vclamp 37.0V at Ipk 20.0A; Ct 25000 pf
65♦	V22MA1B	5	ZnO	Alec	Vm 18.0V;Ipk 40A;Vclamp 51.0V at Ipk 2.0A; Ct 410 pf
66♦	V22ZA2	5	ZnO	M936†	Vm 18.0V;Ipk 500.0A;Vclamp 43.0V at Ipk 5.0A; Ct 5000 pf
67♦	V22ZA05	5	ZnO	M936†	Vm 18.0V;Ipk 50.0A;Vclamp 51.0V at Ipk 2.0A; Ct 400 pf
68♦	V24ZA50	5	ZnO	M936†	Vm 18.0V;Ipk 2000.0A;Vclamp 43.0V at Ipk 20.0A; Ct 20000 pf
69♦	V27ZA05	5	ZnO	M936†	Vm 22.0V;Ipk 50.0A;Vclamp 59.0V at Ipk 2.0A; Ct 350 pf
70♦	V27ZA60	5	ZnO	M936†	Vm 22.0V;Ipk 2000.0A;Vclamp 50.0V at Ipk 20.0A; Ct 18000 pf
71♦	V33MA1A	5	ZnO	Alec	Vm 23.0V;Ipk 40.0A;Vclamp 73.0V at Ipk 2.0A; Ct 300 pf
72♦	V33MA1B	5	ZnO	Alec	Vm 26.0V;Ipk 40.0A;Vclamp 67.0V at Ipk 2.0A; Ct 300 pf
73♦	V33ZA05	5	ZnO	M936†	Vm 26.0V;Ipk 50.0A;Vclamp 67.0V at Ipk 2.0A; Ct 300 pf
74♦	V33ZA70	5	ZnO	M936†	Vm 27.0V;Ipk 2000.0A;Vclamp 58.0V at Ipk 20.0A; Ct 15000 pf
75♦	V36ZA80	5	ZnO	M936†	Vm 31.0V;Ipk 2000.0A;Vclamp 63.0V at Ipk 20.0A; Ct 12000 pf
76♦	V39MA2A	5	ZnO	Alec	Vm 28.0V;Ipk 40.0A;Vclamp 86.0V at Ipk 2.0A; Ct 250 pf
77♦	V39MA2B	5	ZnO	Alec	Vm 31.0V;Ipk 40.0A;Vclamp 79.0V at Ipk 2.0A; Ct 250 pf
78♦	V39ZA05	5	ZnO	M936†	Vm 31.0V;Ipk 50.0A;Vclamp 79.0V at Ipk 2.0A; Ct 250 pf
79♦	V47MA2A	5	ZnO	Alec	Vm 34.0V;Ipk 40.0A;Vclamp 99.0V at Ipk 2.0A; Ct 210 pf
80♦	V47MA2B	5	ZnO	Alec	Vm 38.0V;Ipk 40.0A;Vclamp 90.0V at Ipk 2.0A; Ct 210 pf
81♦	V47ZA05	5	ZnO	M936†	Vm 38.0V;Ipk 50.0A;Vclamp 90.0V at Ipk 2.0A; Ct 200 pf
82♦	V56MA2A	5	ZnO	Alec	Vm 40.0V;Ipk 40.0A;Vclamp 117.0V at Ipk 2.0A; Ct 180 pf
83♦	V56MA2B	5	ZnO	Alec	Vm 45.0V;Ipk 40.0A;Vclamp 108.0V at Ipk 2.0A; Ct 180 pf
84♦	V56ZA05	5	ZnO	M936†	Vm 45.0V;Ipk 50.0A;Vclamp 108.0V at Ipk 2.0A; Ct 150 pf
85♦	V68MA3A	5	ZnO	Alec	Vm 48.0V;Ipk 40.0A;Vclamp 138.0V at Ipk 2.0A; Ct 150 pf
86♦	V68ZA05	5	ZnO	M936†	Vm 5.60V;Ipk 50.0A;Vclamp 127.0V at Ipk 2.0A; Ct 120 pf
87♦	V82ZA05	5	ZnO	M936†	Vm 66.0V;Ipk 200.0A;Vclamp 145.0V at Ipk 2.0A; Ct 100 pf
88♦	V100ZA05	5	ZnO	M936†	Vm 81.0V;Ipk 200.0A;Vclamp 175.0V at Ipk 2.0A; Ct 80 pf
89♦	V112BA60	5	ZnO	M†	Vm 1400.0V;Ipk 70,000.0A;Vclamp 3,100.0V at Ipk 200.0A; Ct 2200 pf
90♦	V120ZA05	5	ZnO	M936†	Vm 102.0V;Ipk 200.0A;Vclamp 205.0V at Ipk 2.0A; Ct 70 pf
91♦	V130HE150	5	ZnO	M943†	Vm 175.0V;Ipk 20,000.0A;Vclamp 365.0V at Ipk 00.0A; Ct 4700 pf
92♦	V130LA5	5	ZnO	M936†	Vm 175.0V;Ipk 2500.0A;Vclamp 340.0V at Ipk 25.0A; Ct 500 pf
93♦	V131DA40	5	ZnO	M†	Vm 175.0V;Ipk 30,000.0A;Vclamp 360.0V at Ipk 200.0A; Ct 10000 pf
94♦	V140LA2	5	ZnO	M936†	Vm 180.0V;Ipk 1200.0A;Vclamp 360.0V at Ipk 10.0A; Ct 160 pf
95♦	V140LA5	5	ZnO	M936†	Vm 180.0V;Ipk 2500.0A;Vclamp 360.0V at Ipk 25.0A; Ct 480 pf
96♦	V140LA10A	5	ZnO	M936†	Vm 180.0V;Ipk 4500.0A;Vclamp 360.0V at Ipk 50.0A; Ct 900 pf
97♦	V142BB60	5	ZnO	M†	Vm 1750.0V;Ipk 70,000.0A;Vclamp 3,900.0V at Ipk 200.0A; Ct 1800 pf
98♦	V150HE150	5	ZnO	M943†	Vm 200.0V;Ipk 20,000.0A;Vclamp 425.0V at Ipk 300.0A; Ct 4000 pf
99♦	V150LA5	5	ZnO	M936†	Vm 200.0V;Ipk 2500.0A;Vclamp 395.0V at Ipk 25.0A; Ct 400 pf
100♦	V150ZA05	5	ZnO	M936†	Vm 127.0V;Ipk 200.0A;Vclamp 240.0V at Ipk 2.0A; Ct 60 pf
101♦	V151DA40	5	ZnO	M†	Vm 200.0V;Ipk 30,000.0A;Vclamp 420.0V at Ipk 200.0A; Ct 9000 pf
102♦	V172BB60	5	ZnO	M†	Vm 2150.0V;Ipk 70,000.0A;Vclamp 4,500.0V at Ipk 200.0A; Ct 1500 pf
103♦	V175LA2	5	ZnO	M936†	Vm 225.0V;Ipk 1200.0A;Vclamp 455.0V at Ipk 10.0A; Ct 130 pf
104♦	V175LA10A	5	ZnO	M936†	Vm 225.0V;Ipk 4500.0A;Vclamp 455.0V at Ipk 50.0A; Ct 700 pf
105♦	V180ZA05	5	ZnO	M936†	Vm 153.0V;Ipk 200.0A;Vclamp 290.0V at Ipk 2.0A; Ct 50 pf
106♦	V202BB60	5	ZnO	M†	Vm 2500.0V;Ipk 70,000.0A;Vclamp 5,500.0V at Ipk 200.0A; Ct 1200 pf
107♦	V220ZA05	5	ZnO	M936†	Vm 180.0V;Ipk 200.0A;Vclamp 360.0V at Ipk 2.0A; Ct 40 pf
108♦	V230LA4	5	ZnO	M936†	Vm 300.0V;Ipk 1200.0A;Vclamp 595.0V at Ipk 10.0A; Ct 120 pf
109♦	V230LA20A	5	ZnO	M936†	Vm 300.0V;Ipk 4500.0A;Vclamp 595.0V at Ipk 50.0A; Ct 600 pf
110♦	V242BB60	5	ZnO	M†	Vm 3000.0V;Ipk 70,000.0A;Vclamp 6,600.0V at Ipk 200.0A; Ct 1000 pf

SYMBOLS AND CODES EXPLAINED IN INTERPRETER

12. MISCELLANEOUS DIODES - Schottky Barrier (Cont'd)

LINE No.	3 TYPE NUMBER	1 TYPE	2 MAT.	DWG. NO.	DESCRIPTION
1♦	V250HE250	5	ZnO	M943†	Vm 330.0V;Ipk 20,000.0A;Vclamp 690.0V at Ipk 300.0A; Ct 2500 pf
2♦	V250LA10	5	ZnO	M936†	Vm 330.0V;Ipk 2500.0A;Vclamp 650.0V at Ipk 25.0A; Ct 250 pf
3♦	V251DA40	5	ZnO	M†	Vm 330.0V;Ipk 30,000.0A;Vclamp 660.0V at Ipk 200.0A; Ct 5000 pf
4♦	V270ZA05	5	ZnO	M936†	Vm 225.0V;Ipk 200.0A;Vclamp 440.0V at Ipk 2.0A; Ct 35 pf
5♦	V271DA40	5	ZnO	M†	Vm 369.0V;Ipk 30,000.0A;Vclamp 730.0V at Ipk 200.0A; Ct 4500 pf
6♦	V275HE250	5	ZnO	M943†	Vm 369.0V;Ipk 20,000.0A;Vclamp 760.0V at Ipk 300.0A; Ct 2250 pf
7♦	V275LA10	5	ZnO	M936†	Vm 369.0V;Ipk 2500.0A;Vclamp 710.0V at Ipk 25.0A; Ct 230 pf
8♦	V320HE300	5	ZnO	M943†	Vm 420.0V;Ipk 20,000.0A;Vclamp 860.0V at Ipk 300.0A; Ct 1900 pf
9♦	V321DA40	5	ZnO	M†	Vm 420.0V;Ipk 30,000.0A;Vclamp 830.0V at Ipk 200.0A; Ct 3600 pf
10♦	V330ZA05	5	ZnO	M936†	Vm 275.0V;Ipk 200.0A;Vclamp 540.0V at Ipk 2.0A; Ct 30 pf
11♦	V390ZA05	5	ZnO	M936†	Vm 330-0V;Ipk 200.0A;Vclamp 640.0V at Ipk 2.0A; Ct 25 pf
12♦	V420HE400	5	ZnO	M943†	Vm 560.0V;Ipk 25,000.0A;Vclamp 1200.0V at Ipk 300.0A; Ct 3000 pf
13♦	V420LA10	5	ZnO	M936†	Vm 560.0V;Ipk 2500.0A;Vclamp 1120.0V at Ipk 25.0A; Ct 220 pf
14♦	V420LA20A	5	ZnO	M936†	Vm 560.0V;Ipk 4500.0A;Vclamp 1120.0V at Ipk 50.0A; Ct 500 pf
15♦	V420LA40B	5	ZnO	M936†	Vm 560.0V;Ipk 6500.0A;Vclamp 1060.0V at Ipk 100.0A; Ct 1000 pf
16♦	V421BA60	5	ZnO	M†	Vm 560.0V;Ipk 70,000.0A;Vclamp 1140.0V at Ipk 200.0A; Ct 6000 pf
17♦	V421DA40	5	ZnO	M†	Vm 560.0V;Ipk 40,000.0A;Vclamp 1160.0V at Ipk 200.0A; Ct 3000 pf
18♦	V430ZA05	5	ZnO	M936†	Vm 369.0V;Ipk 200.0A;Vclamp 700.0V at Ipk 2.0A; Ct 20 pf
19♦	V480HE450	5	ZnO	M943†	Vm 640.0V;Ipk 25,000.0A;Vclamp 1320.0V at Ipk 300.0A; Ct 2700 pf
20♦	V480LA40A	5	ZnO	M936†	Vm 640.0V;Ipk 4500.0A;Vclamp 1240.0V at Ipk 50.0A; Ct 450 pf
21♦	V481BA60	5	ZnO	M†	Vm 640.0V;Ipk 70,000.0A;Vclamp 1,250.0V at Ipk 200.0A; Ct 5100 pf
22♦	V481DA40	5	ZnO	M†	Vm 640.0V;Ipk 40,000.0A;Vclamp 1270.0V at Ipk 200.0A; Ct 2500 pf
23♦	V510HE500	5	ZnO	M943†	Vm 675.0V;Ipk 25,000.0A;Vclamp 1450.0V at Ipk 300.0A; Ct 2400 pf
24♦	V510LA40A	5	ZnO	M936†	Vm 675.0V;Ipk 4500.0A;Vclamp 1350.0V at Ipk 50.0A; Ct 400 pf
25♦	V510LA80B	5	ZnO	M936†	Vm 675.0V;Ipk 6500.0A;Vclamp 1280.0V at Ipk 100.0A; Ct 800 pf
26♦	V511DA40	5	ZnO	M†	Vm 675.0V;Ipk 40,000.0A;Vclamp 1400.0V at Ipk 200.0A; Ct 2400 pf
27♦	V571DA40	5	ZnO	M†	Vm 730.0V;Ipk 40,000.0A;Vclamp 1550.0V at Ipk 200.0A; Ct 2200 pf
28♦	V575HE550	5	ZnO	M943†	Vm 730.0V;Ipk 25,000.0A;Vclamp 1600.0V at Ipk 300.0A; Ct 2200 pf
29♦	V575LA40A	5	ZnO	M936†	Vm 730.0V;Ipk 4500.0A;Vclamp 1500.0V at Ipk 50.0A; Ct 370 pf
30♦	V575LA80B	5	ZnO	M936†	Vm 730.0V;Ipk 6500.0A;Vclamp 1410.0V at Ipk 100.0A; Ct 750 pf
31♦	V660PA100A	5	ZnO	M943†	Vm 850.0V;Ipk 6,500.0A;Vclamp 1820.0V at Ipk 100.0A; Ct 800 pf
32♦	V660PA100C	5	ZnO	M943†	Vm 850.0V;Ipk 6,500.0A;Vclamp 1650.0V at Ipk 100.0A; Ct 800 pf
33♦	V661BA60	5	ZnO	M†	Vm 850.0V;Ipk 70,000.0A;Vclamp 1,750.0V at Ipk 200.0A; Ct 3900 pf
34♦	V661DA40	5	ZnO	M†	Vm 850.0V;Ipk 40,000.0A;Vclamp 1780.0V at Ipk 200.0A; Ct 2000 pf
35♦	V751BA60	5	ZnO	M†	Vm 970.0V;Ipk 70,000.0A;Vclamp 2,000.0V at Ipk 200.0A; Ct 3300 pf
36♦	V751DA40	5	ZnO	M†	Vm 970.0V;Ipk 40,000.0A;Vclamp 2040.0V at Ipk 200.0A; Ct 1800 pf
37♦	V881BA60	5	ZnO	M†	Vm 1150.0V;Ipk 70,000.0A;Vclamp 2,500.0V at Ipk 200.0A; Ct 2700 pf
38♦	V1000LA80A	5	ZnO	M936†	Vm 1200.0V;Ipk 4500.0A;Vclamp 2700.0V at Ipk 50.0A; Ct 200 pf

UHF-DETECTOR DIODE

42	1N105	7		A32d	PIV-30V.,Rev. R-150K from 0 to 10V.
43	1S2090	7		DO35	Front End Diode;UHF,VHF,FM;Q 200 min;Cap Ratio 136;VBR 20V at -5.0 uA
44	1S2267	7		DO35	Front End Diode;TV;Q 160;Cap Ratio 2.9†;Cap 13pF at 10V;VBR -25V
45	1S2268	7		DO35	Front End Diode;TV;Q 200;Cap Ratio 2.9†;Cap 13pF at 10V;VBR -25V
46	1S2790	7		DO35	Front End Diode;UHF,VHF,FM;Q 50 min;Cap 26pF max;VF .95V at 50mA
47	CD1	7		TO106	Detector, G.P.; PIV 4V; VF 0.90; IF 20mA; PD 150mW
48	CD2	7		TO106	Detector, G.P.; PIV 5V; VF 0.85; IF 5mA; PD 150mW
49	CD2A	7		TO106	Detector, G.P.; PIV 5V; VF 0.85; IF 5mA; PD 150mW
50	CM50	7		DO35	Detector, G.P.; PIV 15V; VF 0.80; IF 200mA; PD 200mW
51	HSCH3171	7	♦	A1ad	Zero Bias Schottky Detector Diodes;IF 10mA at VF 600mV
52	HSCH3206	7	♦	F82	Zero Bias Schottky Detector Diodes;IF 10mA at VF 600mV
53	HSCH3207	7	♦	F133	Zero Bias Schottky Detector Diodes;IF 10mA at VF 600mV
54	HSCH3486	7	♦	A1ad	Zero Bias Schottky Detector Diodes;IF 10mA at VF 400mV;IR 500uA at VR 3.0V
55	HSCH5018	7	♦	F133	Zero Bias Schottky Detector Diodes;IF 10mA at VF 400mV;IR 500uA at VR 3.0V
56	HSCH5019	7	♦	F82	Zero Bias Schottky Detector Diodes;IF 10mA at VF 400mV;IR 500uA at VR 3.0V
57	PR265-RT	7	Ge	DO7	AF/RF Detector;PRV 60V;IF rms .05A
58	PR266-RT	7	Ge	DO7	TV Video Detector;PRV 25V;IF rms .05A
59	PR268-RT	7	Ge	DO7	AF/RF Detector;PRV 80V;IF rms .09A
60	PR269-RT	7	Ge	DO7	TV Video Detector;PRV 40V;IF rms .035A
61	SFD104	7	Ge	DO7	Uhf Video Detector;PIV-30V;IR-6.0uA max at 2.0V.
62	SFD106	7	Ge	DO7	Uhf Video Detector;PIV-25V;IR-40uA max at 10V.
63	1N830A	7	Si	A60aa	PIV-5V.: Rect. Eff.- 65%; If-25mA.
64	1SS16	7	Si	A1cy	UHF Detector/Mixer;VRM 5.0V;Io 30mA
65	1SV98	7	Si #	DO35	VR 30; IR at VR 100nA; C 6.0p at VR 10V and f 1.0Mhz
66	A2S009	7	Si ♦	u11	Detector Diode Chip;Tss -58.5dBm;VBR 5.0V;Co .11pf at 0V,1.0MHz
67	A2S306	7	Si ♦	A1ah	Matched Pair A2S301;VHF to 3.0GHz;ΔCTO .20pf max at 0V,1.0MHz;ΔVF 20mVmax at .75 to 20mA
68	A2S308	7	Si ♦	A1ah	Matched Pair A2S303;VHF to 3.0GHz;ΔCTO .20pf max at 0V,1.0MHz;ΔVF 20mVmax at .75 to 20mA
69	A2S356	7	Si ♦	M916a	Matched Bridge Quad A2S303;VHF TO3.0GHz;ΔCTO.20pf max at 0V,1.0MHz;ΔVF20mVmax at.75 to 20mA
70	A2S370	7	Si ♦	A1ah	Matched Quad A2S303;VHF to 3.0GHz;ΔCTO .20pf max at 0V,1.0MHz;ΔVF 20mVmax at .75 to 20mA
71	A2S396	7	Si ♦	M916	Matched Ring Quad A2S303;VHF to 3.0GHz;ΔCTO.20pf max at 0V,1.0MHz;ΔVF 20mVmax at.75 to 20mA
72	A2S401	7	Si ♦	A1ah	Matched Pair A2S400 S Band Mixer;Noise Figure Match .30dBmax,IF Impedance Match 25ohms max
73	A2S566	7	Si ♦	A1ah	Matched Pair A2S565 S Band Mixer;Noise Figure Match .30dBmax,IF Impedance Match 25ohms max
74	A2S730	7	Si ♦	M846a	Ring Quad Mixer;Freq Rng UHF-KuBand;CT 600fF max;VF 400mV Typ;RD 15Ω max;RS 7.0Ω Typ
75	A2S804	7	Si ♦	A1ah	Matched Pair A2S800;VF Match 20mV at .50 to 5.0mA
76	A2S805	7	Si ♦	A1ah	Matched Quad A2S800;VF Match 20mV at .50 to 5.0mA
77	A2S818	7	Si ♦	A1ah	Matched Pair A2S817 S Band Mixer;ΔNF .30dBmax;ΔZIF 25ohms max
78	A2S819	7	Si ♦	A1ah	Matched Quad A2S817 S Band Mixer;ΔNF .30dBmax;ΔZIF 25ohms max
79	A2S825	7	Si ♦	A1ah	Matched Pair A2S824 S Band Detector;Sensitivity Match .50mV/uW,Video Res Match 100ohms
80	A2S826	7	Si ♦	A1ah	Batched Matched A2S811;ΔCTO ±.05pf at 0V,1.0MHz;ΔVF ±5mV at 10mA
81	A2S865	7	Si ♦	A1ah	Batched Matched A2S800;ΔCTO ±.05pf at 0V,1.0MHz;ΔVF ±5mV at 10mA
82	A2S866	7	Si ♦	A1ah	Batched Matched A2S810;ΔCTO ±.05pf at 0V,1.0MHz;ΔVF ±5mV at 10mA
83	BA484	7	Si #	DO34	VHF Band Switching;VR35;IF 100mA;Cd 1.6pF;VF1.2;Tj 150° C
84	BAR18	7	Si ♦	TO236	Single;ultra high speed;for UHF/hybrid;Vr70V;Pt200mW
85	BAS70-04	7	Si ♦	TO236	Dual;Doubler config;Low turn on;Vr70V;t100nS;Pt200mW
86	BAS70-05	7	Si ♦	TO236	Dual,com Cathode;Low turn on;Vr70V;t100nS;Pt200mW
87	BAS70-06	7	Si ♦	TO236	Dual,com Anode;Low turn on;Vr70V;t100nS;Pt200mW
88	HP5082-0009	7	Si ♦	u19l	X-Band Detector;Tangential Sensitivity -55dBm;CO .14pF at VR 0V, f 1MHz.
89	HP5082-0013	7	Si ♦	u19h	Chip for Hybrid IC Mixer/Detector Ckts;TSS-54dBm;NF 6.0dB typ at 9.375GHz;Cj .18pf max
90	HP5082-0024	7	Si ♦	u19k	Switching Speed 100pS;Min VBR 70V at 10uA;Max VF 1.0V at 15mA;Max Co 1.7pF.
91	HP5082-0029	7	Si ♦	u19h	Ku-Band Mixer;Tangential Sensitivity -54dBm;CO .14pF at VR 0V, f 1MHz.
92	HP5082-0031	7	Si ♦	u19m	Switching Speed 100pS;Min VBR 5V at 100uA;Max VF .34V at 1.0mA;Max Co .8pF.
93	HP5082-0057	7	Si ♦	u19j	Chip for Hybrid IC Gen Purpose Ckts;VBR 20V min;IF 35mA min at VF 1.0V;Cj 1.0pf max
94	HP5082-0058	7	Si ♦	u19j	Chip for Hybrid IC Gen Purpose Ckts;VBR 15V min;IF 20mA min at VF 1.0V;Cj 1.0pf max
95	HP5082-0087	7	Si ♦	u19j	Switching Speed 100pS;Min VBR 20V at 10uA;Max VF 1.0V at 35mA;Max Co 1.0pF.
96	HP5082-0094	7	Si ♦	u19k	Chip for Hybrid IC Gen Purpose Ckts;VBR 70V min;IF 15mA min at VF 1.0V;Cj 1.7pf max
97	HP5082-0097	7	Si ♦	u19j	Switching Speed 100pS;Min VBR 15V at 10uA;Max VF 1.0V at 20mA;Max Co 1.1pF.
98	HP5082-2263	7	Si ♦	M845	Quad-Mixer;CT 350fF max;ΔCT 50fF max;ΔVF 20mV max;Freq RG 6-8GHz;VF 450mV typ;RS 7Ω typ.
99	HP5082-2810	7	Si ♦	A1n	VBR 20V min;Vf 410mV max;Ir 100nA max;Cap 1.2pf max;Carrier Lifetime 100ps max.
100	HP5082-2811	7	Si ♦	A1n	VBR 15V min;Vf 410mV max;Ir 100nA max;Cap 1.2pf max;Carrier Lifetime 100ps max.
101	HP5082-2837	7	Si ♦	A330	Switching Speed 100pS;Min VBR 70V at 10uA;Max VF 1.0V at 15mA;Max Co 2.0pF.
102	HSCH0813	7	Si ♦	DO35$	Mixer/Detector Diode; VBR 30; VF 400mV; IR 300nA
103♦	HSCH0814	7	Si ♦	DO35$	Mixer/Detector Diode; VBR 30; VF 400mV; IR 300nA
104	HSCH0815	7	Si ♦	DO35$	Mixer/Detector Diode; VBR 30; VF 400mV; IR 300nA
105♦	HSCH0816	7	Si ♦	DO35$	Mixer/Detector Diode; VBR 30; VF 400mV; IR 300nA
106	MA439	7	Si	P3	X Band Controlled Voltage Detector.
107	MBD102	7	Si ♦	A276	Hot Carrier UHF Mixer;VR 4.0V;Pd 400mW;VF 480mV;Capacitance 800fF;Inductance 3.0nH.
108	MBD201	7	Si ♦	M764a	Hot-Carrier Detector;VR 20V;Pd 500mW;VF 600mVdc;CT 1.5pf;Carrier Lifetime 100ps.
109	MBD301	7	Si ♦	M764a	Hot-Carrier Detector;VR 30V;Pd 500mW;VF 600mVdc;CT 1.5pf;Carrier Lifetime 100ps.
110	MBD501	7	Si ♦	M859	Hot carrier diode;Vr 50V;Pd 500mW;Cap. 1.0pF max;Ir 200nA max;Carrier Lifet. 15ps.

IN ORDER OF (1) TYPE (2) MAT AND (3) TYPE NO.

LINE No.	3 TYPE NUMBER	1 TYPE	2 MAT.	DWG. NO.	DESCRIPTION
1	MBD502	7	Si ♦	A276	Hot Carrier Detector;VR 50V;Pd 400mW;VF 1.0V;Capacitance 480fF;Rev. Leakage 7.0nA.
2	MBD701	7	Si ♦	M859	Hot carrier diode;Vr 70V;Pd 500mW;Cap. 1.0pF max;Ir 200nA max;Carrier Lifet. 15ps.
3	MBD702	7	Si ♦	A276	Hot Carrier Detector;VR 70V;Pd 400mW;VF 1.0V;Capacitance 480fF;Rev. Leakage 9.0nA.
4	MD358	7	Si ♦	M785a	Beam Lead;V(BR)4.0V;VF 650mV at IF 10mA;CT 180fF;Single Side Band NF 6.5db.
5	MDX653	7	Si ♦	F133k	Mixer;V(BR) 5.0V min;CJ 80fF Typ;RS 5.0Ω Typ;Freq Rng 300MHz-40GHz;IF 20mA
6	MDX654	7	Si ♦	F133k	Mixer;V(BR) 5.0V min;CJ 80fF Typ;RS 5.0Ω Typ;Freq Rng 300MHz-40GHz;IF 20mA
7	MDX655	7	Si ♦	F133k	Mixer;V(BR) 5.0V min;CJ 80fF Typ;RS 5.0Ω Typ;Freq Rng 300MHz-40GHz;IF 20mA
8	P0890	7	Si	A1vd	Freq.Band UHF;f 100MHz;Rectification efficiency 65% min.
9	P0890A	7	Si	A1vd	Freq.Band UHF;f 100MHz;Breakdown Voltage 5.0V min.
10	PD0810	7	Si	A1ad	S Band;Rectifier Efficiency at 100MHz-70%;PRV-5.0V min.
11	PD0810A	7	Si	A1ad	S Band;Rectifier Efficiency at 100MHz-70%;PRV-2.0V min.
12	PD0810AL	7	Si	M86c△	S Band;Rectifier Efficiency at 100MHz-70%;PRV-2.0V min.
13	PD0810L	7	Si	M86c△	S Band;Rectifier Efficiency at 100MHz-70%;PRV-5.0V min.
14	PFG930B05	7	Si ♦	F10af	Harm.Gen.Var;Min VB 30V;Min-Max Cj at zero bias and 1MHz .30-.60pf;Min fc at 6V 250GHz.
15	1N830	7	Si∅	A60aa	ER 2.0V max;IF 25mA max;Rectification efficiency at MC 65% min.
16	D5090A	7	Si∅	A1ak§	Detector Diode;Freq Up to 1.0GHz;Efficiency 65% min,BV 5.0V min
17	D5090	7	Si$∅	A1ak§	Detector Diode;Freq Up to 1.0GHz;Efficiency 65% min

UHF-MIXER DIODE

21	1N82	8		DO7	Noise Figure-16db max.
22	1N132	8		DO7	PIV-25V; IR-500uA at 50V.
23	1N299	8		DO7	IF-3.0mA min. at .50V; IR-200uA at 6.0V.
24	1SS86	8		DO35	IF 8uA at .5V;BVR 3V at 1mA;IR 50uA at 0.5V;C .85pf at VR 0.5V f 1MHz
25	1SS87	8		DO35	IF 3mA at .5V;BVR 3V at 1mA;IR 10uA at 2V;C .85pf at VR 0.5V f 1MHz
26	1750	8		M1131	Double balanced mixer;3 port non-linear;500Hz-300MHz;BNC
27	1751	8		M1133	Double balanced mixer;3 port non-linear;500Hz-300MHz;pcb encaps
28	1754	8		M1131	Double balanced mixer;3 port non-linear;10Hz-100MHz;BNC
29	1755	8		M1133	Double balanced mixer;3 port non-linear;10Hz-100MHz;pcb encaps
30	1762	8		M1132	Double balanced mixer;3 port non-linear;30Hz-300MHz;BNC
31	1763	8		M1117	Double Balanced Mixer;Uses Array of Schottky;IF 40mA;PD 200mA
32	1764	8		M1129	Double balanced mixer;3 port non-linear;10Hz-100MHz;pcb submin;Hermetic
33	1765	8		M1134	Double balanced mixer;3 port non-linear;10MHz-1.0GHz;pcb submin;Hermetic
34	1768	8		M1129	Double balanced mixer;3 port non-linear;200Hz-250MHz;pcb submin;Hermetic
35	1785	8		M1116	Double Balanced Mixer;Uses Mono Array of Schottky;IF 40mA;PD200mA
36	1793	8		M1130	Double balanced mixer;3 port non-linear;500Hz-500MHz;pcb relay hdr;Hermetic
37	1794	8		M1130	Double balanced mixer;3 port non-linear;10Hz-100MHz;pcb relay hdr;Hermeticc
38	1795	8		M1115	Double Balanced Mixer;Uses Mono Array of Schottky;IF 40mA;PD200mA
39	1798	8		M1130	Double balanced mixer;3 port non-linear;500Hz-250MHz;pcb relay hdr;Hermetic
40	1813	8		M1130	Double balanced mixer;3 port non-linear;500Hz-400MHz;pcb relay hdr;Hermeticc
41	1814	8		M1130	Double balanced mixer;3 port non-linear;10Hz-100MHz;pcb relay hdr;Hermetic
42	1815	8		M1130	Double balanced mixer;3 port non-linear;10MHz-1.0GHz;pcb relay hdr;Hermetic
43	1833	8		M1130	Double balanced mixer;3 port non-linear;500Hz-500MHz;pcb relay hdr;Hermetic
44	1834	8		M1130	Double balanced mixer;3 port non-linear;50Hz-100MHz;pcb relay hdr;Hermetic
45	1835	8		M1130	Double balanced mixer;3 port non-linear;10MHz-1.0GHz;pcb relay hdr;Hermetic
46	1843	8		M1130	Double balanced mixer;3 port non-linear;500Hz-100MHz;pcb relay hdr;Hermetic
47	1SS151(A)	8	♦	DO35	Schottky Barrier Mixer;VR3.0V;Io 30mA
48	1SS165(A)	8	♦	DO34	Schottky Barrier Mixer;VR10V;Io 15mA
49	1N82A	8	Si	DO7	PIV-5.0V;IF-15mA at .50V;IR-15uA at .50V;NF-14db max.
50	1S1925	8	Si	A1ce	PIV 5.0V;IF 6.0mA at 500mV;IR 10uA at 2.0V;NF 12db max;Average Rect. Io 50mA max.
51	1S1926	8	Si	A1ce	PIV 5.0V;VF 450mVmax at 10mA;IR 20uAmax at 1.0V;NF 11.5db max.
52	1S2198	8	Si	DO7	Schottky Barrier;NF 10.5dB max. at 900MHz;CT 1.3pF max;VBR 500mV min. at IR 30uA.
53	BAT17DS	8	Si ♦	M500a	UHF Mixer;NF 7.0 dB max at 1.0 GHz;C 1.0pF at 0 VR;4.0 V(BR);IF 30mA Abs. max.
54	HP5082-2080	8	Si ♦	A1ah	Batch Matched HP5082-2835;ΔVF 10mV at 10mA,ΔCO .10pf at 1.0MHz
55	HP5082-2306	8	Si ♦	A1ah	Unconnected Matched Pair of HP5082-2301;ΔVF 20mV at .75 to 20mA,ΔCO .20pf at 1.0MHz
56	HP5082-2308	8	Si ♦	A1ah	Unconnected Matched Pair of HP5082-2303;ΔVF 20mV at .75 to 20mA,ΔCO .20pf at 1.0MHz
57	HP5082-2351	8	Si ♦	A1ah	Matched Pair of HP5082-2350 Mixer Diodes;ΔNF .30dB max,ΔZIF 25ohms max
58	HP5082-2356	8	Si ♦	M916a	Matched Encapsulated Bridge Quad of HP5082-2303;ΔVF 20mV at .75 to 20mA,ΔCO .2pf at 1.0MHz
59	HP5082-2370	8	Si ♦	A1ah	Unconnected Matched Quad of HP5082-2303;ΔVF 20mV at .75 to 20mA,ΔCO .20pf at 1.0MHz
60	HP5082-2396	8	Si ♦	M916	Matched Encapsulated Ring Quad of HP5082-2303;ΔVF 20mV at .75 to 20mA,ΔCO .2pf at 1.0MHz
61	HP5082-2521	8	Si ♦	A1ah	Matched Pair of HP5082-2520 Mixer Diodes;ΔNF .30dB max,ΔZIF 25ohms max
62	HP5082-2566	8	Si ♦	A1ah	Matched Pair of HP5082-2565 Mixer Diodes;ΔNF .30dB max,ΔZIF 25ohms max
63	HP5082-2706	8	Si ♦	F133g	Matched Pair of HP5082-2701 Mixer Diodes;ΔNF .30dB max,ΔZIF 25ohms max
64	HP5082-2712	8	Si ♦	F82	Matched Pair of HP5082-2711 Mixer Diodes;ΔNF .30dB max,ΔZIF 25ohms max
65	HP5082-2714	8	Si ♦	F82	Matched Pair of HP5082-2713 Mixer Diodes;ΔNF .30dB max,ΔZIF 25ohms max
66	HP5082-2724	8	Si ♦	F82	Matched Pair of HP5082-2723 Mixer Diodes;ΔNF .30dB max,ΔZIF 25ohms max
67	HP5082-2804	8	Si ♦	A1ah	Unconnected Matched Pair of HP5082-2800;ΔVF 20mV at .50 to 5.0mA
68	HP5082-2805	8	Si ♦	A1ah	Unconnected Matched Quad of HP5082-2800;ΔVF 20mV at .50 to 5.0mA
69	HP5082-2813	8	Si ♦	M916a	Matched Encapsulated Bridge Quad of HP5082-2811;ΔVF 20mV at 10mA
70	HP5082-2814	8	Si ♦	M916	Matched Encapsulated Ring Quad of HP5082-2811;ΔVF 20mV at 10mA
71	HP5082-2815	8	Si ♦	A1ah	Unconnected Matched Quad of HP5082-2811;ΔVF 20mV at 10mA
72	HP5082-2818	8	Si ♦	A1ah	Matched Pair of HP5082-2817 Mixer Diodes;ΔNF .30dB max,ΔZIF 25ohms max
73	HP5082-2826	8	Si ♦	A1ah	Batch Matched HP5082-2811;ΔVF 10mV at 10mA,ΔCO .10pf at 1.0MHz
74	HP5082-2836	8	Si ♦	A1ah	Batch Matched HP5082-2800;ΔVF 10mV at .50 to 5.0mA,ΔCO .10pf at 1.0MHz
75	HP5082-2912	8	Si ♦	A1ah	Unconnected Matched Pair of HP5082-2900;ΔVF 30mV at 1.0 to 10mA
76	HP5082-2970	8	Si ♦	A1ah	Unconnected Matched Quad of HP5082-2900;ΔVF 30mV at 1.0 to 10mA
77	HP5082-9395	8	Si ♦	A329	Quad Double Bal Mixer for 4.0 to 8.0GHz;CT .40pf,ΔCT .10pf;VF .30V,ΔVF 20mV;Rs 5.0Ω
78	HP5082-9396	8	Si ♦	A329	Quad Double Bal Mixer for 8.0 to 12GHz;CT .20pf,ΔCT .05pf;VF .45V,ΔVF 20mV;Rs 7.0Ω
79	HP5082-9397	8	Si ♦	A329	Quad Double Bal Mixer for 8.0 to 12GHz;CT .20pf,ΔCT .05pf;VF .30V,ΔVF 20mV;Rs 7.0Ω
80	HP5082-9398	8	Si ♦	A329	Quad Double Bal Mixer for 12 to 18GHz;CT .15pf,ΔCT .05pf;VF .45V,ΔVF 20mV;Rs 7.0Ω
81	HP5082-9399	8	Si ♦	A329	Quad Double Bal Mixer for 12 to 18GHz;CT .15pf,ΔCT .05pf;VF .30V,ΔVF 20mV;Rs 7.0Ω
82	HP5082-9696	8	Si ♦	A329	Quad Double Bal Mixer up to 4.0GHz;CT .55pf,ΔCT .10pf;VF .40V,ΔVF 20mV;Rs 7.0Ω
83	HP5082-9697	8	Si ♦	A329	Quad Double Bal Mixer up to 4.0GHz;CT .55pf,ΔCT .10pf;VF .30V,ΔVF 20mV;Rs 5.0Ω
84	MBD101	8	Si	M859	Schottky Barrier Diode;NF 7.0db max.at 1.0GHz;Ct 1.0pF max;V(BR)R 4.0V min.at IR 10uA.
85	MBI-101	8	Si	M750	FWD Pt 200mWmax;VR 4.0Vmin;Max.CT 1.0pF,VF 600mV,NF 7.0dB,IR250nA;LS3.0nHtyp;Schottky Bar
86	MPI3401	8	Si	M750	VHF Switch;FWD Pt 200mW;CT 1.0pF,RS.7Ω,IR .1uA all max;VR 35 min;LS 3.0nH typ.
87	PK0620	8	Si	DO7Δ	Schottky Barrier;NF-6.0db max. at 900MHz;Ct-.75pf max;VBR-6.0V at IR-10uA.
88	PK0620L	8	Si	M86c△	Schottky Barrier;NF-6.0db max. at 900MHz;Ct-.75pf max;VBR-6.0V at IR-10uA.
89	PK0820	8	Si	A1ad△	Schottky Barrier;NF-6.0db max. at 900MHz;Ct-.75pf max;VBR-6.0V at IR-10uA.
90	PK0820L	8	Si	M86c△	Schottky Barrier;NF-6.0db max. at 900MHz;Ct-.75pf max;VBR-6.0V at IR-10uA.
91	PMD100-02	8	Si	F99	Mixer and Detector;Freq Rng 10M-12.4GHz;TSS -58dBm min;NF 6.0dB max;ZIF 200-400Ω
92	PMD100-08	8	Si	A1at	Mixer and Detector;Freq Rng 10M-12.4GHz;TSS -58dBm min;NF 6.0dB max;ZIF 200-400Ω
93	PMD100-09	8	Si	A1h	Mixer and Detector;Freq Rng 10M-12.4GHz;TSS -58dBm min;NF 6.0dB max;ZIF 200-400Ω
94	PMD100-19	8	Si	F107	Mixer and Detector;Freq Rng 10M-12.4GHz;TSS -58dBm min;NF 6.0dB max;ZIF 200-400Ω
95	PMD100-42	8	Si	M896	Mixer and Detector;Freq Rng 10M-12.4GHz;TSS -58dBm min;NF 6.0dB max;ZIF 200-400Ω
96	PR267-RT	8	Si	DO7	TV UHF Mixer;Freq to 1.0GHz;PRV 5.0V;IF rms .015A;IR 15uA
97	PTC217	8	Si	A1by	PIV 5.0V;If 15mA at 500mV max at 25° C;Ir 15uA at 500mV;NF 14db
98	1S2187	8	Si$♦	A382	PIV 2.0V,Imax 30mA;NF 7.0dB at 900MHz,IF Freq 45MHz,IF NF 3.0dB;Vf .50V at 60mA typ
99	BA280	8	Si♦	M501	NF 6.5dB at 900MHz;VR 4.0V max,IF 30mA max;VF 600mV at 10mA;C 1.0pf at 1.0MHz
100	BAT17	8	Si♦	M500c	UHF Mixer;NF 7.0dB max at 900MHz;C 1.0pf max at 0 Volts;VR 4.0V max,IF 15mA max

VARISTOR

104	DAC1	9			Disc:9.5mmDX2.5mmTh;Pd 250mW max;IR 1.7mA max at 48V;IR 52mA min at 150V pulsed; with leads
105	DAC2	9			Disc:9.5mmDX2.5mmTh;Pd 250mW max;IR 3.0mA max at 48V;IR 72mA min at 150V pulsed; with leads
106	DAC3	9			Disc:9.5mmDX2.5mmTh;Pd 250mW max;IR 5.0mA max at 48V;IR 121mA min at 150V pulsed; with leads
107	DBC1	9			Disc:12.5mmDX2.5mmTh;Pd 500mW max;IR500uA max at 48V;IR 27mA min at 150V pulsed; with leads
108	DBC2	9			Disc:12.5mmDX2.5mmTh;Pd 500mW max;IR700uA max at 48V;IR 32mA min at 150V pulsed; with leads
109	DBC3	9			Disc:12.5mmDX2.5mmTh;Pd 500mW max;IR900uA max at 48V;IR 35mA min at 150V pulsed; with leads
110	DBC4	9			Disc:12.5mmDX2.5mmTh;Pd 500mW max;IR1.3mA max at 48V;IR 45mA min at 150V pulsed; with leads

IN ORDER OF (1) TYPE (2) MAT AND (3) TYPE NO.

LINE No.	3 TYPE NUMBER	1 TYPE	2 MAT.	DWG. NO.	DESCRIPTION
1	DBC5	9			Disc:12.5mmDX2.5mmTh;Pd 500mW max;IR1.7mA max at 48V;IR 65mA min at 150V pulsed; with leads
2	DBC6	9			Disc:12.5mmDX2.5mmTh;Pd 500mW max;IR2.3mA max at 48V;IR 72mA min at 150V pulsed; with leads
3	DBC7	9			Disc:12.5mmDX2.5mmTh;Pd 500mW max;IR3.0mA max at 48V;IR 91mA min at 150V pulsed; with leads
4	DBC8	9			Disc:12.5mmDX2.5mmTh;Pd 500mW max;IR5.0mA max at 48V;IR 115mA min at 150V pulsed; with leads
5	DBC9	9			Disc:12.5mmDX2.5mmTh;Pd 500mW max;IR5.0mA max at 48V;IR 152mA min at 150V pulsed; with leads
6	IDBC12-47	9		M992	Pd 500mW;Voltage 12.47V § at 10mA;Avg Eff 3.0
7	IDCC12-68	9		M992a	Pd 800mW;Voltage 12-68V § at 10mA;Avg Eff 3.4
8	IDDC12-68	9		M992b	Pd 1.0W;Voltage 12-68V § at 10mA;Avg Eff 3.3
9	IRWC470-1300	9		M993	Pd 700mW;Voltage 470-1.3kV § at 10mA;Avg Eff 4.5
10	ODBC47-330	9		M992	Pd 500mW;Voltage 47-330V § at 10mA;Avg Eff 4.0
11	ODCC56-330	9		M992a	Pd 800mW;Voltage 56-330V § at 10mA;Avg Eff 4.0
12	ODDC56-330	9		M992b	Pd 1.0W;Voltage 56-330V § at 10mA;Avg Eff 4.3
13	Q69-X1	9		F146	Rated Voltage 230V;900V(max) Surge;20kA p-p;Cap 7.0pf typ
14	Q69-X2	9		F146	Rated Voltage 350V;1.1kV(max) Surge;20kA p-p;Cap 5.0pf typ
15	Q69-X3	9		F146	Rated Voltage 600V;600V(max) Surge;20kA p-p;Cap 5.0pf typ
16	Q69-X101	9		F142	Rated Voltage 90V;600V(max);5.0kA p-p;Cap 2.0pf typ
17	Q69-X102	9		F142	Rated Voltage 230V;650V(max);5.0kA p-p;Cap 2.0pf typ
18	Q69-X103	9		F142	Rated Voltage 350V;700V(max);5.0kA p-p;Cap 2.0pf typ
19	Q69-X106	9		F142	Rated Voltage 150V;600V(max);5.0kA p-p;Cap 2.0pf typ
20	Q69-X111	9		F142	Rated Voltage 600V;1100V(max);5.0kA p-p;Cap 2.0pf typ
21	Q69-X138	9		A466i	Rated Voltage 90V;650V(max) Surge;10kA p-p;Cap 1.5pf typ
22	Q69-X141	9		F143d	Rated Voltage 90V;650V(max) Surge;10kA p-p;Cap 1.5pf typ
23	Q69-X142	9		F144	Rated Voltage 230V;650V(max) Surge;10kA p-p;Cap 1.5pf typ
24	Q69-X144	9		F144	Rated Voltage 90V;650V(max) Surge;10kA p-p;Cap 1.5pf typ
25	Q69-X145	9		F144	Rated Voltage 350V;700V(max) Surge;10kA p-p;Cap 1.5pf typ
26	Q69-X151	9		A445	Rated Voltage 90V;600V(max);5.0kA p-p;Cap 2.0pf typ
27	Q69-X152	9		A445	Rated Voltage 230V;650V(max);5.0kA p-p;Cap 2.0pf typ
28	Q69-X153	9		A445	Rated Voltage 350V;700V(max);5.0kA p-p;Cap 2.0pf typ
29	Q69-X154	9		A445	Rated Voltage 600V;1100V(max);5.0kA p-p;Cap 2.0pf typ
30	Q69-X157	9		A445	Rated Voltage 150V;600V(max);5.0kA p-p;Cap 2.0pf typ
31	Q69-X201	9		F143b	Rated Voltage 470V;1000V(max) Surge;5.0kA p-p;Cap 2.0pf typ
32	Q69-X202	9		F143c	Rated Voltage 800V;1600V(max) Surge;5.0kA p-p;Cap 2.0pf typ
33	Q69-X215	9		A446j	Rated Voltage 800V;1.5kV(max) Surge;10kA p-p;Cap 1.0pf typ
34♦	Q69-X216	9		A446j	Rated Voltage 1.0kV; 1.5kV (max) Surge;10kA p-p; Cap 1.0pf typ
35	Q69-X217	9		A446j	Rated Voltage 1.4kV;2.0kV(max) Surge;10kA p-p;Cap 1.0pf typ
36	Q69-X223	9		F143d	Rated Voltage 350V;700V(max) Surge;10kA p-p;Cap 1.5pf typ
37	Q69-X224	9		F143d	Rated Voltage 230V;650V(max) Surge;10kA p-p;Cap 1.5pf typ
38	Q69-X225	9		A446i	Rated Voltage 230V;650V(max) Surge;10kA p-p;Cap 1.5pf typ
39	Q69-X226	9		F141	Rated Voltage 230V;650V(max);2.5kA p-p;Cap 1.0pf typ
40	Q69-X227	9		F141	Rated Voltage 350V;700V(max);2.5kA p-p;Cap 1.0pf typ
41	Q69-X238	9		A446i	Rated Voltage 350V;700V(max) Surge;10kA p-p;Cap 1.5pf typ
42	Q69-X241	9		A446j	Rated Voltage 150V;650V(max) Surge;10kA p-p;Cap 1.0pf typ
43	Q69-X243	9		A446j	Rated Voltage 230V;700V(max) Surge;10kA p-p;Cap 1.0pf typ
44	Q69-X244	9		F143e	Rated Voltage 230V;700V(max) Surge;10kA p-p;Cap 1.0pf typ
45	Q69-X245	9		F143e	Rated Voltage 150V;650V(max) Surge;10kA p-p;Cap 1.0pf typ
46	Q69-X247	9		F143e	Rated Voltage 90V;650V(max) Surge;10kA p-p;Cap 1.0pf typ
47♦	Q69-X248	9		A446j	Rated Voltage 90V;650V(max) Surge;10kA p-p;Cap 1.0pf typ
48	Q69-X249	9		F143e	Rated Voltage 350V;800V(max) Surge;10kA p-p;Cap 1.0pf typ
49	Q69-X250	9		A446j	Rated Voltage 350V;800V(max) Surge;10kA p-p;Cap 1.0pf typ
50	Q69-X251	9		A446g	Rated Voltage 470V;1000V(max) Surge;5.0kA p-p;Cap 2.0pf typ
51	Q69-X252	9		A446h	Rated Voltage 800V;1600V(max) Surge;5.0kA p-p;Cap 2.0pf typ
52	Q69-X253	9		A446f	Rated Voltage 270V;1000V(max) Surge;5.0kA p-p;Cap 2.0pf typ
53	Q69-X353	9		A446b	Rated Voltage 2500V;4200V(max);2.5kA p-p;Cap 2.0pf typ
54	Q69-X355	9		A446a	Rated Voltage 1600V;2500V(max);2.5kA p-p;Cap 2.0pf typ
55	Q69-X356	9		A445	Rated Voltage 1000V;1600V(max);5.0kA p-p;Cap 2.0pf typ
56	Q69-X358	9		A446c	Rated Voltage 4500V;6000V(max);2.5kA p-p;Cap 2.0pf typ
57	Q69-X360	9		A446d	V(BR) 6.5kV max;Dynamic V(BR) 10.5kV max;Cap 2.0pf typ
58	Q69-X361	9		A446d	V(BR) 9.0kV max;Dynamic V(BR) 14kV max;Cap 2.0pf typ
59	Q69-X405	9		S564	Rated Voltage 800V;1.5kV(max) Surge;20kA p-p;Cap 1.2pf typ
60	Q69-X406	9		S564	Rated Voltage 1.0kV;1.5kV(max) Surge;20kA p-p;Cap 1.2pf typ
61	Q69-X407	9		S564	Rated Voltage 1.4kV;2.0kV(max) Surge;20kA p-p;Cap 1.2pf typ
62	Q69-X433	9		S564	Rated Voltage 3.0kV;4.0kV(max) Surge;20kA p-p;Cap 1.0pf typ
63	Q69-X451	9		A444	Rated Voltage 90V;600V(max);2.5kA p-p;Cap 1.0pf typ
64	Q69-X452	9		A444	Rated Voltage 150V;600V(max);2.5kA p-p;Cap 1.0pf typ
65	Q69-X453	9		A444	Rated Voltage 230V;650V(max);2.5kA p-p;Cap 1.0pf typ
66	Q69-X454	9		A444	Rated Voltage 350V;900V(max);2.5kA p-p;Cap 1.0pf typ
67	Q69-X503	9		A466e	Voltage Range 70-300 V;1.2kV(max) Surge;5.0kA p-p;Cap 2.0pf typ
68	Q69-X504	9		A466e	Voltage Range 70-450 V;1.5kV(max) Surge;5.0kA p-p;Cap 2.0pf typ
69	Q69-X551	9		A446k	180-240V Voltage Span;100A(max) Switching Current;Cap 2.0pf typ
70	Q69-X556	9		A446m	180-250V Voltage Span;100A(max) Switching Current;Cap 2.0pf typ
71	Q69-X558	9		A446k	85-125V Voltage Span;60A(max) Switching Current;Cap2.0pf typ
72	Q69-X559	9		A446m	76-108V Voltage Span;60A(max) Switching Current;Cap2.0pf typ
73	Q69-X751	9		F148b	Rated Voltage (a-b) 300-900V,(a-e,b-e) 300-500V;800V(max) Surge
74	Q69-X758	9		F147b	Rated Voltage (a-b) 300-750V,(a-e,b-e) 300-500V;800V(max) Surge
75	Q69-X759	9		A447b	Rated Voltage (a-b) 300-750V,(a-e,b-e) 300-500V;800V(max) Surge
76	Q69-X789	9		A448	Rated Voltage 350V;900V(max) Surge;10kA p-p;Cap 1.0pf typ
77	Q69-X790	9		A448	Rated Voltage 230V;900V(max) Surge;10kA p-p;Cap 1.0pf typ
78	Q69-X797	9		A447a	Rated Voltage 350V;900V(max) Surge;10kA p-p;Cap 1.0pf typ
79	Q69-X798	9		F147a	Rated Voltage 230V;900V(max) Surge;10kA p-p;Cap 1.0pf typ
80	Q69-X799	9		F147a	Rated Voltage 350V;900V(max) Surge;10kA p-p;Cap 1.0pf typ
81	Q69-X800	9		A447a	Rated Voltage 230V;900V(max) Surge;10kA p-p;Cap 1.0pf typ
82	Q69-X801	9		F145	Rated Voltage 230V;650V(max) Surge;20kA p-p;Cap 3.0pf typ
83	Q69-X802	9		F145	Rated Voltage 350V;700V(max) Surge;20kA p-p;Cap 3.0pf typ
84	Q69-X804	9		F145	Rated Voltage 600V;1.0kV(max) Surge;20kA p-p;Cap 3.0pf typ
85	Q69-X814	9		F145	Rated Voltage 90V;600V(max) Surge;20kA p-p; Cap 3.0pf typ
86	Q69-X815	9		F145	Rated Voltage 150V;600V(max) Surge;20kA p-p;Cap 3.0pf typ
87	SNR-7A75K	9		M396w	ACrms 75V, DC 102V; Energy 2.0J; PD .2W; 108V min (Varistor) at 1.0mADC; CT 260pF at 1kHz
88	SNR-7A95K	9		M396w	ACrms 95V, DC 127V; Energy 2.0J; PD .2W; 135V min (Varistor) at 1.0mADC; CT 210pF at 1kHz
89	SNR-7A115K	9		M396w	ACrms 115V, DC 153V; Energy 2.0J; PD .2W; 162V min (Varistor) at 1.0mADC; CT 180pF at 1kHz
90	SNR-7A130K	9		M396x	ACrms 130V, DC 175V; Energy 2.5J; PD .24W; 184V min (Varistor) at 1.0mADC; CT 160pF at 1kHz
91	SNR-7A150K	9		M396x	ACrms 150V, DC 200V; Energy 2.5J; PD .24W; 212V min (Varistor) at 1.0mADC; CT 140pF at 1kHz
92	SNR-7A175K	9		M396x	ACrms 175V, DC 230V; Energy 2.5J; PD .24W; 248V min (Varistor) at 1.0mADC; CT 120pF at 1kHz
93	SNR-7A250K	9		M396aa	ACrms 250V, DC 330V; Energy 5.0J; PD .28W; 354V min (Varistor) at 1.0mADC; CT 80pF at 1kHz
94	SNR-7A275K	9		M396aa	ACrms 275V, DC 362V; Energy 5.0J; PD .28W; 389V min (Varistor) at 1.0mADC; CT 80pF at 1kHz
95	SNR-7A300K	9		M396aa	ACrms 300V, DC 395V; Energy 5.0J; PD .28W; 424V min (Varistor) at 1.0mADC; CT 70pF at 1kHz
96	SNR-7D18L	9		M936V	ACrms 10V,DC 14V;Energy 0.5J;PD.18W;15V min(Varistor) at 1.0mADC;CT 1300pF at 1kHz
97	SNR-7D22L	9		M936V	ACrms 14V,DC 720V;Energy 0.6J;PD .18W;19V min(Varistor) at 1.0mADC;CT 1300pF at 1kHz
98	SNR-7D24L	9		M936V	ACrms 15V,DC 20V;Energy 0.8J;PD .18W;20V min(Varistor) at 1.0mADC:CT 1200pF at 1kHz
99	SNR-7D27L	9		M936V	ACrms 17V,DC 22V;Energy 0.8J;PD .18W;23V min(Varistor) at 1.0mADC;CT 1100pF at 1kHz
100	SNR-7D33K	9		M936V	ACrms 20V,DC 26V;Energy 1.0J;PD .19W;30V min(Varistor) at 1.0mADC;CT 900pF at 1kHz
101	SNR-7D39K	9		M936w	ACrms 25V,DC 31V;Energy 1.2J;PD .20W;35V min(Varistor) at 1.0mADC;CT 750pF at 1kHz
102	SNR-7D47K	9		M936x	ACrms 30V,DC 38V;Energy 1.4J;PD .21W;42V min(Varistor) at 1.0mADC;CT 650pF at 1kHz
103	SNR-7D56K	9		M936x	ACrms 35V,DC, 45V;Energy 1.7J;PD .22W;50V min(Varistor) at 1.0mADC;CT 550pF at 1kHz
104	SNR-7D68K	9		M936y	ACrms 40V,DC 56V;Energy 2.0J;PD .24W;61V min(Varistor) at 1.0mADC;CT 450pF at 1kHz
105	SNR-7D82K	9		M936z	ACrms 50V,DC 66V;Energy 2.5J;PD .25W;74V min(Varistor) at 1.0mADC;CT 350pF at 1kHz
106	SNR-7D100K	9		M936aa	Acrms 60V,DC81V,Energy 3.0J;PD.26W;90Vmin(Varistor)at 1.0mADC;CT300pF at 1kHz
107	SNR-14A75K	9		M396ag	ACrms 75V, DC 102V; Energy 8.0J; PD .5W; 108V min (Varistor) at 1.0mADC; CT 1.6nF at 1kHz
108	SNR-14A95K	9		M396ag	ACrms 95V, DC 127V; Energy 8.0J; PD .5W; 135V min (Varistor) at 1.0mADC; CT 1.3nF at 1kHz
109	SNR-14A115K	9		M396ag	ACRMS 115V, DC 153V; Energy 10J; PD .5W; 162V min (Varistor) at 1.0mADC; CT 1.1nF at 1kHz
110	SNR-14A130K	9		M936ah	ACrms 130V,DC 175V;Energy 10J;PD.5W;184Vmin (Varistor) at 1.0mADC;CT940pF at 1kHz

SYMBOLS AND CODES EXPLAINED IN INTERPRETER

12. MISCELLANEOUS DIODES - Varistor (Cont'd)

IN ORDER OF (1) TYPE (2) MAT AND (3) TYPE NO.

LINE No.	3 TYPE NUMBER	1 TYPE	2 MAT.	DWG. NO.	DESCRIPTION
1	SNR-14A150K	9		M936ah	ACrms 150V,DC 200V;Energy 10J;PD .5W;212V min (Varistor) at 1.0mADC;CT 820pF at 1kHz
2	SNR-14A175K	9		M936ah	ACrms 175V, DC 175V; Energy 103; PD .5W; 247V min (Varistor) at 1.0mADC; CT 700pF at 1kHz
3	SNR-14A250K	9		M936ai	ACrms 250V,DC 330V;Energy 20J; PD .6W;354V min (Varistor) at 1.0mADC;CT 510pF at 1kHz
4	SNR-14A275K	9		M936ai	ACrms 275V,DC 362V;Energy 20J;PD .6W;389V min (Varistor) at 1.0mADC;CT 460pF at 1kHz
5	SNR-14A300K	9		M936aj	ACrms 300V;DC 395V;Energy 20J;PD .6W;424V min (Varistor) at 1.0mADC;CT 420pF at 1kHz
6	SNR-14A320K	9		M936aj	ACrms 320V,DC 420V;Energy 20J;PD .6W;462V min (Varistor) at 1.0mADC;CT 390pF at 1kHz
7	SNR-14A420K	9		M936ak	ACrms 420V,DC 560V;Energy 40J;PD .6W;610V min (Varistor) at 1.0mADC;CT 290pF at 1kHz
8	SNR-14A460K	9		M936ak	ACrms 460V,DC 615V;Energy 40J;PD .6W;665V min (Varistor) at 1.0mADC;CT 270pF at 1kHz
9	SNR-14A480K	9		M936ak	ACrms 480V,DC 640V;Energy 40J;PD .7W;693V min (Varistor) at 1.0mADC;CT 260pF at 1kHz
10	SNR-14A510K	9		M936al	ACrms 510V,DC 675V;Energy 40J;PD .7W;738V min (Varistor) at 1.0mADC;CT 250pF at 1kHz
11	SNR-14A550K	9		M936al	ACrms 550V,DC 720V;Energy 40J;PD .7W;795V min (Varistor) at 1.0mADC;CT 230pF at 1kHz
12	SNR-14A575K	9		M936al	ACrms 575V,DC 755V;Energy 40J;PD .8W;830V min (Varistor) at 1.0mADC;CT 220pF at 1kHz
13	SNR-14D18L	9		M936O	Acrms 10V,DC14V,Energy 3.0J;PD0.4W;15Vmin Varistor)at 1.0mADC;CT8.0fF at 1kHz
14	SNR-14D22L	9		M936O	Acrms14V,DC18V,Energy 3.0J;PD0.4W;19Vmin(Varistor)at 1.0mADC;CT7.0fF at 1kHz
15	SNR-14D24L	9		M963o	Acrms15V,DC20V,Energy 4.0J;PD0.4W;20Vmin(Varistor)at 1.0mADC;CT6.5pfF at 1kHz
16	SNR-14D27L	9		M963p	Acrms 17V,DC 22V,Energy 4.0J;PD 0.4W;23V min(Varistor) at 1.0mADC;CT 5.8pF at 1kHz
17	SNR-14D33K	9		M936p	Acrms20V,DC26V,Energy 5.0J;PD0.4W;30Vmin(Varistor)at 1.0mADC;CT4.8pF at 1kHz
18	SNR-14D39K	9		M936p	Acrms25V,DC31V,Energy6.0J;PD.45W;35Vmin(Varistor)at 1.0mADC;CT4.1pF at 1kHz
19	SNR-14D47K	9		M936q	Acrms30V,DC38V,Energy7.0J;PD.45W;42Vmin(Varistor)at 1.0mADC;CT3.5pF at 1kHz
20	SNR-14D56K	9		M936r	Acrms35V,DC45V,Energy8.0J;PD.45W;50Vmin(Varistor)at 1.0mADC;CT3.0Ff at 1kHz
21	SNR-14D68K	9		M936s	Acrms 40V,DC 56V,Energy 10J;PD 0.5W;61V min (Varistor) at 1.0mADC;CT 2.5fF at 1kHz
22	SNR-14D82K	9		M936t	Acrms50V;DC66V,Energy12J;PD0.5W;74Vmin(Varistor)at 1.0mADC;CT2.1fF at 1kHz
23	SNR-14D100K	9		M963u	Acrms 60V,DC81V,Energy 15J;PD .55W;90V min(Varistor) at 1.0mADC;CT 1.8pF at 1kHz
24	SNR-20A130K	9		M936ab	ACrms 130V;DC 175V;Energy 20J;PD .85W;184V min (Varistor) at 1.0mADC;CT 1900pF at 1kHz
25	SNR-20A150K	9		M936ab	ACrms 150V,DC 200V;Energy 20J;PD .85W;212V min (Varistor) at 1.0mADC;1600pF at 1kHz
26	SNR-20A175K	9		M936ab	ACrms 175V;DC 230V;Energy 20J;PD .85W;247V min (Varistor) at 1.0mADC;CT 1400pF at 1kHz
27	SNR-20A250K	9		M936ac	ACrms 250V,DC 330V;Energy 40J;PD .9W;354V min (Varistor) at 1.0mADC;CT 1000pF at 1kHz
28	SNR-20A275K	9		M936ac	ACrms 275V,DC 362V;Energy 40J;PD .9W;389V min (Varistor) at 1.0mADC;CT 900pF at 1kHz
29	SNR-20A300K	9		M936ad	ACrms 300V,DC 395V;Energy 40J;PD .9W;424V min (Varistor) at 1.0mADC;CT 800pF at 1kHz
30	SNR-20A320K	9		M936ad	ACrms 320V,DC 420V;Energy 40J;PD .9W;462V min (Varistor) at 1.0mADC;CT 760pF at 1kHz
31	SNR-20A420K	9		M936ae	ACrms 420V,DC 560V;Energy 80J;PD .9W;610V min (Varistor) at 1.0mADC;CT 580pF at 1kHz
32	SNR-20A460K	9		M936ae	ACrms 460V,DC 615V;Energy 80J;PD .9W;665V min (Varistor) at 1.0mADC;CT 530pF at 1kHz
33	SNR-20A480K	9		M936ae	ACrms 480V,DC 640V;Energy 80J;PD 1.0W;693V min (Varistor) at 1.0mADC;CT 510pF at 1kHz
34	SNR-20A510K	9		M936af	ACrms 510V,DC 675V;Energy 80J;PD 1.0W;738V min (Varistor) at 1.0mADC;CT 480pF at 1kHz
35	SNR-20A550K	9		M936af	ACrms 550V,DC 720V;Energy 80J; PD 1.0W;795Vmin (Varistor) at 1.0mADC; CT 460p Fat 1kHz
36	SNR-20A575K	9		M936af	ACrms 575V;DC 755V;Energy 80J;PD 1.1W;830V min(Varistor) at 1.0mADC;CT 420pF at 1kHz
37	V18Z-1	9			Applied Vrms 11V;Avg Trans Diss .2W;2400pF typ
38	V18Z-3	9			Applied Vrms 11V;Avg Trans Diss .4W;12.6fF typ
39	V22Z-1	9			Applied Vrms 14V;Avg Trans Diss .2W;1960pF typ
40	V22Z-3	9			Applied Vrms 14V;Avg Trans Diss .4W;10.3fF typ
41	V24Z-1	9			Applied Vrms 15V;Avg Trans Diss .2W;1800pF typ
42	V24Z-4	9			Applied Vrms 15V;Avg Trans Diss .4W;9450pF typ
43	V27A-1	9		Alaah	Applied Vrms 17V; Avg Trans Diss 0.2W; 340pF typ
44	V27Z-1	9		Alaan	Applied Vrms 17V;Avg Trans Diss 0.2W;1600pF typ
45	V27Z-4	9		A1aah	Applied Vrms 17V;Avg Trans Diss .4W;8400pF typ
46	V33A-2	9		Alaah	Applied Vrms 21V; Avg Trans Diss 0.2W; 270pF typ
47	V33Z-1	9		A1aan	Applied Vrms 21V;Avg Trans Diss 0.2W;1300pF typ
48	V33Z-5	9		A1aan	Applied Vrms 21V;Avg Trans Diss 0.4W;7000pF typ
49	V39A-2	9		Alaah	Applied Vrms 25V; Avg Trans Diss 0.2W; 230pF typ
50	V39Z-2	9		A1aan	Applied Vrms 25V;Avg Trans Diss 0.2W;1200pF typ
51	V39Z-6	9		A1aah	Applied Vrms 25V;Avg Trans Diss .4W;6000pF typ
52	V47A-3	9		Alaah	Applied Vrms 30V; Avg Trans Diss 0.2W; 190pF typ
53	V47Z-2	9		A1aan	Applied Vrms 30V; Avg Trans Diss .22W; 1000pF typ
54	V47Z-7	9		A1aan	Applied Vrms 30V;AVG Trans Diss .45W;5000pF typ
55	V56A-3	9		Alaah	Applied Vrms 35V; Avg Trans Diss 0.2W; 160pF typ
56	V56Z-2	9		A1aan	Applied Vrms 35V;Avg Trans Diss .23W;800pF typ
57	V56Z-8	9		A1aan	Applied Vrms 35V;Avg Trans Diss .47W;4000pF typ
58	V68A-3	9		A1aan	Applied Vrms 43V;Avg Trans Diss .2W;130pF typ
59	V68Z-2	9		A1aan	Applied Vrms 43V;Avg Trans Diss .24W;700pF typ
60	V68Z-10	9		A1aan	Applied Vrms 43V;Avg Trans Diss 0.5W;3500pF typ
61	V82A-5	9		A1aan	Applied Vrms 52V;Avg Trans Diss .2W;110pF typ
62	V82Z-2	9		A1aan	Applied Vrms 52V;Avg Trans Diss .25W;600pF typ
63	V82Z-12	9		A1aan	Applied Vrms 52V;Avg Trans Diss .5W;3000pF typ
64	V100A-2	9		A1aan	Applied Vrms 63V;Avg Trans Diss .3W;50pF typ
65	V100Z-3	9		A1aan	Applied Vrms 63V;Avg Trans Diss .26W;500pF typ
66	V100Z-15	9		A1aan	Applied Vrms 63V;Avg Trans Diss .55W;2500pF typ
67	V117R-2	9		M1096	Applied Vrms 75V; Avg Trans Diss .35W; 145pF typ
68	V117R-5	9		M1096	Applied Vrms 75V; Avg Trans Diss .50W; 560pF typ
69	V117R-6	9		M1096	Applied Vrms 75V; Avg Trans Diss .60W; 870pF typ
70	V117R-15	9		M1096	Applied Vrms 75V; Avg Trans Diss .85W; 1830pF typ
71	V120A-2	9		A1aan	Applied Vrms 75V;Avg Trans Diss .3W;40pF typ
72	V120Z-3	9		A1aan	Applied Vrms 76V;Avg Trans Diss .26W;400pF typ
73	V120Z-18	9		A1aan	Applied Vrms 76V;Avg Trans Diss .55W;2000pF typ
74	V150A-3	9		A1aan	Applied Vrms 92V;Avg Trans Diss .3W;30pF typ
75	V150R-2	9		M1096	Applied Vrms 95V; Avg Trans Diss .35W; 110pF typ
76	V150R-6	9		M1096	Applied Vrms 95V; Avg Trans Diss .50W; 400pF typ
77	V150R-8	9		M1096	Applied Vrms 95V; Avg Trans Diss .60W; 630pF typ
78	V150R-17	9		M1096	Applied Vrms 95V; Avg Trans Diss .85W; 1410pF typ
79	V180A-3	9		A1aan	Applied Vrms 110V;Avg Trans Diss .3W;25pF typ
80	V183R-2	9		M1096	Applied Vrms 115V; Avg Trans Diss .35W; 75 pF typ
81	V183R-7	9		M1096	Applied Vrms 115V; Avg Trans Diss .50W; 350pF typ
82	V183R-9	9		M1096	Applied Vrms 115V; Avg Trans Diss .60W; 570pF typ
83	V183R-20	9		M1096	Applied Vrms 115V; Avg Trans Diss .85W; 1270pF typ
84	V216R-3	9		M1096	Applied Vrms 135V; Avg Trans Diss .35W; 85 pF typ
85	V216R-7	9		M1096	Applied Vrms 135V; Avg Trans Diss .60W; 310pF typ
86	V216R-10	9		M1096	Applied Vrms 135V; Avg Trans Diss .70W; 490pF typ
87	V216R-20	9		M1096	Applied Vrms 135V; Avg Trans Diss .90W; 1110pf typ
88	V220A-4	9		A1aan	Applied Vrns 138V;Avg Trans Diss .3W;20pF typ
89	V250R-3	9		M1096	Applied Vrms 160V; Avg Trans Diss .40W; 80pF typ
90	V250R-10	9		M1096	Applied Vrms 160V; Avg Trans Diss .60W; 290pF typ
91	V250R-12	9		M1096	Applied Vrms 160V; Avg Trans Diss .70W; 390pF typ
92	V250R-25	9		M1096	Applied Vrms 160V; Avg Trans Diss .90W; 880pF typ
93	V270A-4	9		A1aan	Applied Vrms 171V;Avg Trans Diss .3W;17pF typ
94	V283R-3	9		M1096	Applied Vrms 180V; Avg Trans Diss .40W; 70pF typ
95	V283R-10	9		M1096	Applied Vrms 180V; Avg Trans Diss .60W; 250pF typ
96	V283R-12	9		M1096	Applied Vrms 180V; Avg Trans Diss .70W; 390pF typ
97	V283R-30	9		M1096	Applied Vrms 180V;Avg Trans Diss .90W;870pF typ
98	V330A-5	9		A1aan	Applied Vrms 200V;Avg Trans Diss .3W;15pF typ
99	V370A-5	9		A1aan	Applied Vrms 220V;Avg Trans Diss .3W;12pF typ
100	V383R-5	9		M1096	Applied Vrms 240V; Avg Trans Diss .40W; 50pF typ
101	V383R-13	9		M1096	Applied Vrms 240V; Avg Trans Diss .70w 190pF typ
102	V383R-15	9		M1096	Applied Vrms 240V; Avg Trans Diss .80W; 300pF typ
103	V383R-40	9		M1096	Applied Vrms 240V; Avg Trans Diss 1.00W; 660pF typ
104	V390A-6	9		A1aan	Applied Vrms 242V;Avg Trans Diss .3W;10pF typ
105	V416R-5	9		M1096	Applied Vrms 260V; Avg Trans Diss .40W; 45pF typ
106	V416R-15	9		M1096	Applied Vrms 260V; Avg Trans Diss .70W; 180pF typ
107	V416R-20	9		M1096	Applied Vrms 260V; Avg Trans Diss .80W; 270pF typ
108	V416R-45	9		M1096	Applied Vrms 260V; Avg Trans Diss 1.00W; 610pF typ
109	V430A-7	9		A1aan	Applied Vrms 264V;Avg Trans Diss .3W;10pF typ
110	V450R-5	9		M1096	Applied Vrms 280V; Avg Trans Diss .40W; 42pF typ

IN ORDER OF (1) TYPE (2) MAT AND (3) TYPE NO.

LINE No.	3 TYPE NUMBER	1 TYPE	2 MAT.	DWG. NO.	DESCRIPTION
1	V450R-15	9		M1096	Applied Vrms 280V; Avg Trans Diss .70W; 160pF typ
2	V450R-20	9		M1096	Applied Vrms 280V; Avg Trans Diss .80W; 250pF typ
3	V450R-45	9		M1096	Applied Vrms 280V;Avg Trans Diss 1.00W;360pF typ
4	V700R-70	9		M1096	Applied Vrms 440V; Avg Trans Diss 1.10W; 360pF typ
5	V730R-70	9		M1096	Applied Vrms 460V; Avg Trans Diss 1.10W; 350pF typ
6	V765R-70	9		M1096	Applied Vrms 480V; Avg Trans Diss 1.10W; 335pF typ
7	V800R-80	9		M1096	Applied Vrms 500V; Avg Trans Diss 1.10W; 320pF typ
8	V850R-80	9		M1096	Applied Vrms 540V; Avg Trans Diss 1.10W; 300pF typ
9	V1000R-100	9		M1096	Applied Vrms 630V; Avg Trans Diss 1.20W; 260pF typ
10	V1400R-100	9		M1096	Applied Vrms 1.0kV; Avg Trans Diss 1.30W; 200pF typ
11	WAC1	9			Disc:9.5mmDX2.5mmTh;Pd 250mW max;IR1.7mA max at 48V;IR 52mA min at 150V pulsed; no leads
12	WAC2	9			Disc:9.5mmDX2.5mmTh;Pd 250mW max;IR3.0mA max at 48V;IR 72mA min at 150V pulsed; no leads
13	WAC3	9			Disc:9.5mmDX2.5mmTh;Pd 250mW max;IR5.0mA max at 48V;IR 121mA min at 150V pulsed; no leads
14	WBC1	9			Disc:12.5mmDX2.5mmTH;Pd 500mW max;IR 500uA max at 48V;IR 27mA min at 150V pulsed; no leads
15	WBC2	9			Disc:12.5mmDX2.5mmTH;Pd 500mW max;IR 700uA max at 48V;IR 32mA min at 150V pulsed; no leads
16	WBC3	9			Disc:12.5mmDX2.5mmTH;Pd 500mW max;IR 900uA max at 48V;IR 35mA min at 150V pulsed; no leads
17	WBC4	9			Disc:12.5mmDX2.5mmTH;Pd 500mW max;IR 1.3mA max at 48V;IR 45mA min at 150V pulsed; no leads
18	WBC5	9			Disc:12.5mmDX2.5mmTH;Pd 500mW max;IR 1.7mA max at 48V;IR 65mA min at 150V pulsed; no leads
19	WBC6	9			Disc:12.5mmDX2.5mmTH;Pd 500mW max;IR 2.3mA max at 48V;IR 72mA min at 150V pulsed; no leads
20	WBC7	9			Disc:12.5mmDX2.5mmTH;Pd 500mW max;IR 3.0mA max at 48V;IR 91mA min at 150V pulsed; no leads
21	WBC8	9			Disc:12.5mmDX2.5mmTH;Pd 500mW max;IR 4.0mA max at 48V;IR 115mA min at 150V pulsed; no leads
22	WBC9	9			Disc:12.5mmDX2.5mmTH;Pd 500mW max;IR 5.0mA max at 48V;IR 152mA min at 150V pulsed; no leads
23	SC150	9	Ge	TO5	P1V 5.0V;IFavg 10mA max;VF 125-160V at 2.0mA;VF 195 V typ at 5mA;TC-2.2mV/°C
24	SC200	9	Ge	TO5	P1V 5.0V;IFavg 10mA max;VF 150-175V at 2.0mA;VF 210 V typ at 5mA;TC-2.2mV/°C
25	SC250	9	Ge	TO5	P1V 5.0V;IFavg 10mA max;VF 165-205V at 2.0mA;VF 225 V typ at 5mA;TC-2.2mV/°C
26	SC300	9	Ge	TO5	P1V 5.0V;IFavg 10mA max;VF 195-250V at 2.0mA;VF 275 V typ at 5mA;TC-2.2mV/°C
27	2SD2A	9	Si	TO106	IF 50mA Max;Pd 200mW Max;PIV 10V;IR 1.0uA at 10V;VF 1.5V Max at 2.0mA;TC -4.0mV/°C
28	BA579A	9	Si	TO236	Dual,com Anode;for UHF/VHF atten;Vr 30V;If 20mA;C360nF
29	BA579C	9	Si	TO236	Dual,com Cathode;for UHF/VHF atten;Vr 30V;If 20mA;C350nF
30	BA579S	9	Si	TO236	Doubler config;for UHF/VHF atten;Vr 30V;If 20mA;C350nF
31	BOV14S10K	9	Si	M1096j	Voltage Range 20-24V;Pd 50mW max;Supply Volt 12Vac;Cap 6.0nF
32	BOV14S14K	9	Si	M1096t	Voltage Range 20-24V;Pd 100mW max;Supply Volt 12Vac;Cap 1.5nF
33	BOV30S10K	9	Si	M1096k	Voltage Range 42-50V;Pd 50mW max;Supply volt 24Vac;Cap 2.2nF
34	BOV30S14K	9	Si	M1096u	Voltage Range 42-50V;Pd 100mW max;Supply Volt 24Vac;Cap 5.5nF
35	BOV60S05K	9	Si	M1096	Voltage Range 90-110V;Pd 100mW max;Supply Volt 48Vac;Cap 200pF
36	BOV60S07K	9	Si	M1096e	Voltage Range 90-110V;Pd 250mW max;Supply Volt 48Vac;Cap 500pF
37	BOV60S10K	9	Si	M1096l	Voltage Range 90-110V;Pd 400mW max;Supply Volt 48Vac;Cap 1.4nF
38	BOV250S05K	9	Si	M1096c	Voltage Range 351-429V;Pd max 100mW; Supply Volt 220Vac ; Cap 50pF
39	BOV250S07K	9	Si	M1096h	Voltage Range 351-429V; Pd max 250mW; Supply Volt 220Vac;Cap 130pF
40	BOV250S10K	9	Si	M1096o	Voltage Range 351-429V;Pd max 400mW; Supply Volt 220 Vac; Cap 270pF
41	BOV250S14K	9	Si	M1096y	Voltage Range 351-429V; Pd max 600mW;Supply Volt 220Vac; Cap 500pF
42	BOV250S20K	9	Si	M1107h	Voltage Range 351-429V;Pd 1.0W max;Supply Volt 220Vac;Cap 1.0nF
43	BOV275S05K	9	Si	M1096d	Voltage Range 387-473V; Pd max 100mW; Supply Volt 250Vac;Cap 45pF
44	BOV275S07K	9	Si	M1096i	Voltage Range 387-473V;Pd max 250mW; Supply Volt 250Vac;Cap 110pF
45	BOV275S10K	9	Si	M1096p	Voltage Range 387-473V; Pd max 400mW; Supply Volt 250Vac;Cap 250pF
46	BOV275S14K	9	Si	M1096z	Voltage Range 387-473V;Pd max 600mW; Supply Volt 250Vac;Cap 450pF
47	BOV275S20K	9	Si	M1107i	Voltage Range 387-473V;Pdmax 1.0mW;Supply Volt 250Vac;Cap 900pF
48	BOV420S10K	9	Si	M1096q	Voltage Range 612-748V; Pd max 400mW; Supply Volt 380 Vac; Cap 130pF
49	BOV420S14K	9	Si	M1107a	Voltage Range 612-748V;Pdmax 600mW;Supply Volt 380Vac;Cap 250pF
50	BOV420S20K	9	Si	M1107j	Voltage Range 612-748V;Pdmax 1.0W;Supply Volt 380Vac;Cap 400pF
51	BOV550S10K	9	Si	M1096r	Voltage Range 819-1001V;Pd max 400mW; Supply Volt 500 Vac; Cap 100pF
52	BOV550S14K	9	Si	M1107b	Voltage Range 819-1001V;Pdmax 600m;Supply Volt 500Vac;Cap 180pF
53	BOV550S20K	9	Si	M1107k	Voltage Range 819-1001V;Pdmax 1.0W;Supply Volt 500Vac;Cap 350pF
54	BOV625S10K	9	Si	M1096s	Voltage Range 900-1100V; Pd max 400mW; Supply Volt 550 Vac; Cap 90pF
55	BOV625S14K	9	Si	M1107c	Voltage Range 900-1100V;Pdmax 600m;Supply Volt 550Vac;Cap 150pF
56	BOV625S20K	9	Si	M1107e	Voltage Range 900-1100V;Pdmax 1.0W;Supply Volt 550Vac;Cap 320pF
57	GSV101	9	Si	A398g	VF 740mV min,850mV max at 100mA;PD 1.0W at 50°C max;Op Temp -65 to 175°C
58	GSV102	9	Si	A398g	VF 740mV min,850mV max at 100mA;PD 1.0W at 50°C max;Op Temp -65 to 175°C
59	GSV103	9	Si	A398g	VF 750mV min,820mV max at 100mA;PD 1.0W at 50°C max;Op Temp -65 to 175°C
60	MA27	9	Si	A1an	IF50mA; VR6V; VF,A.56-.61,B.59-.64,C.62-.67V at IF1.5mA;ΔF/ΔT2.0mV/C
61	MA27Q	9	Si	Alan	IF 50mA; VR6V; VF 1.6V at IF 10uA
62	MA27T	9	Si	A1an	IF 70mA,VF 1.76-2.04V (at IF 3.0mA),IR 1.0uA max (at VR 6.0V),ΔVF/Δt 6.5mv/°C
63	MA27W	9	Si	Alan	IF 100mA;VF:A-1.18-1.28V;A1-1.18-1.24V;A2-1.22-1.28V at IF-3.0mA IR-1.0uAmax
64	MA28	9	Si	Alan	IF 150mA; VR6V; VF 0.64V at IF 1.5mA
65	MA28T	9	Si	Alan	IF 70mA; VR6V; VF 1.15V at IF 10uA; VF 2.04 at IF 3mA 36
66	MA28W	9	Si	Alan	IF 100mA; VR6V; VF 0.7 at 10uA; VF 1.36 at IF 3mA 36
67	MD5	9	Si	C202	IF 100 mA Max;Pd 150mW Max;PIV 5.0V;10 uA at 5.0V;VF 0.8V Max at 5.0mA;TC -2.0mV/°C
68	PTC301	9	Si	DO35	VF690mV max at IF 3.0mA;IR10uA max at VR 5.0V;IFM 150mA;AVF/ΔTa-2.0mV1°C Typ at IF 1.0mA
69	PTC302	9	Si	A305	Diode Varistor for Automatic Volt Control; IF 20mA max; VF .58V at 1.5mA
70	SC20#B	9	Si	A271f	Varactor;Vr 20V;Ir 1.5uA at Vr;CT 16pF min
71	SD2A	9	Si	TO106	IF 50mA Max;Pd 200mW Max;PIV 10V;IR 1.0uA at 10V;VF 0.8V Max at 5.0mA;TC -2.0mV/°C
72	SD60P	9	Si	A270	Vr 35V;Io 100mA;Ir Max 5.0V at 35V; Max temp. 100J.
73	SD61P	9	Si	A270a	Vr 400V; Io 150mA;Ir Max 50V at 400V; Max temp. 100J.
74	SF-1	9	Si	A271	Vr 1.5kV;Io 30mA;Vf 2.0V;trr 300ns; Max Temp 100J
75	STV2H	9	Si	C156	VRM 10V;IF 150mA;IFSM 20A at 10mSec;
76	STV3H	9	Si	C156	VF 1.60V-1.80V at 7.0mA;IR 10uA max at 50V;Isurge 10A;Tstg -60 to plus 100°C.
77	STV4H	9	Si	C156	VF 2.10V-2.35V at 7.0mA;IR 10uA max at 50V;Isurge 8A;Tstg -60 to plus 100°C.
78	SV03	9	Si	A221e	VF-2.3V at If-70mA;IR-10uA max at 100V; Max. Current-150mA.
79	SV03S	9	Si	S425	Varistor;IF 50mA;IFSM 5.0A;VF 1.8V;IF 3.0mA
80	SV04S	9	Si	S425	Varistor;IF 50mA;IFSM 5.0A;VF 2.5V;IF 3.0mA
81	SV-1#B	9	Si	A221g	VF4V max at 100mA,IF 50uA max at .3V(Bidirection);I(DC)400mA max;IFSM 32A at 10mS
82	SV-02	9	Si	A221e	Voltage 4.0V at 100mA;Max Current 150mA
83▼	SV-2#B	9	Si	A221g	VF4V max at 100mA,IF 50uA max at 1.2V(Bidirection);I(DC)150mA max;IFSM25A at 10mS
84▼	SV-3#B	9	Si	A221g	VF2V max at 100mA,IF 50uA max at .6V(Bidirection);I(DC)250mA max;IFSM30A at 10mS
85	SV-04	9	Si	A221g	Vf 3.0V at If 70mA;Ir 10uA max at 100V;Max Current 100mA
86	SV-05	9	Si	A221e	Vf 3.8V at If 70mA;Ir 10uA max at 100V;Max Current 80mA
87	SV-06	9	Si	A221g	Vf 4.5V at If 70mA;Ir 10uA max at 100V;Max Current 70mA
88	SV-100-1	9	Si	A1aaa	2 Matched Si Junct. in Parr. W/opp Polarity;V(F)min.45V/IF 1.0mA;I(Surge)Max 50A;PD 1.0W
89	V64	9	Si	A1fq	Varistor Meter Protector 1 meg at .10V 4 ohms at 1.0V.
90	VR60	9	Si	DO15	IO 500mA Max at 75ZC;IF 20uA at VF 1.2V;VF Max 1.5V at IF 1.0A
91	VR60B	9	Si	DO15	Io 500mA;Bidi Cur at 2.0V,20uA DC;Vf at 1.0A,1.5V
92	VR60T	9	Si	Alwt	Varistor;IF 400mA;IFSM 32A;VF .20V;IF .02mA
93	VR61T	9	Si	Alwt	Varistor;IF 150mA;IFSM 25A;VF 2.3V;IF 1.0mA
94	VR-60	9	Si	A221a	Diode Varistor;Vf 1.5V max/1.0mA;If 20uAmax/200mV Bidirection
95	VR-60B	9	Si	A21b	Diode-Varistor;Vf 1.5Vmax/1.0A,If 20uAmax/200mv,Bidirection
96	VR-61	9	Si	A221a	Diode Varistor;Vf 2.05-2.55/1.0mA,2.50-3.0V/10mA,2.85-3.35/70mA Bidirection
97	VR-61B	9	Si	A406a	Diode-Varistor;Vf 2.3 ±0.25V/1.0mA,2.75 ±0.25V/10mA,3.1 ±0.25V/70mA,Bidirection
98	M8513A-0	9	SiΔ	DO35	Junction Varistor for Temp/Bias Com;ΔVf -2.0V/°C;Vf .65V typ at 3.0mA;Ir 10uAmax at VR 5.0V
99	M8513A-R	9	SiΔ	DO35	Junction Varistor for Temp/Bias Comp;ΔVf-2.1V/°C;Vf .62V typ at 3.0mA;IR 10uA max at VR 5.0V
100	SV100A1	9	SiΔ	A389	Bipolar Junction Diode Pair;200mVmin at 50uA,900mV max at 100mA;Pt 750mW;Imax 500mAdc
101	SV100A3	9	SiΔ	A388	Bipolar Junction Diode Pair;350mVmin at 10uA,1.0V max at 225mA;Pt 750mW;Imax 500mAdc
102	SV100A	9	SiΔ	A388	Bipolar Junction Diode Pair;200mVmin at 10uA,900mV max at 100mA;Pt 750mW;Imax 500mAdc
103	SV100D	9	SiΔ	A388	Bipolar Junction Diode Pair;430mVmin at 100uA,720mV max at 10mA;Pt 750mW;Imax 500mAdc
104	SV300A2	9	SiΔ	A388a	Bipolar Junction Diode Pair;1.2Vmin at 50uA,4.0Vmax at 100mA
105	SV300A5	9	SiΔ	A388a	Bipolar Junction Diode Pair;1.4Vmin at 1.0mA,2.2Vmax at 10mA
106	HV80	9	Si$#	DO35	Junction Diode for Volt Comp;VF .55 to .75V at 3.0mA;VR 10V max,Pd 250mW max
107	BOV420B32K	9	SnO		Voltage Range 612-748V; Pd 1.2wmax; Vsup 380 VAC; C 2.1nF
108	BOV60S14K	9	SI	M1096v	Voltage Range 90-110V;Pd 600mW Max;Supply Volt 48 Vac;Cap 2.4nF
109	BOV60S20K	9	SI	M1107e	Voltage Range 90-110V;Pd 1.0mV Max;Supply Volt 47Vac;Cap 4.8nF
110	BOV130S10K	9	SI	M1096m	Voltage Range 185-225V;Pd 400mV Max;Supply Volt 110Vac;Cap 500pF

IN ORDER OF (1) TYPE (2) MAT AND (3) TYPE NO.

LINE No.	3 TYPE NUMBER	1 TYPE	2 MAT.	DWG. NO.	DESCRIPTION
1	BOV130S14K	9	SI	M1096w	Voltage Range 185-225V;Pd 600mW Max;Supply Volt 110Vac;Cap 1.0nF
2	BOV130S20K	9	SI	M1107f	Voltge Range 185-225V;Pd 1.0W Max;Supply 110Vac;Cap 2.0nF
3	BOV150S05K	9	SI	M1096b	Voltage Range 216-264V;Pd 100mW Max;Supply Volt 130Vac;Cap 70pF
4	BOV150S07K	9	SI	M1096g	Voltage Range 216-264V;Pd 250mW Max:Supply Volt 130Vac;Cap 200pF
5	BOV150S10K	9	SI	M1096n	Voltage Range 216-264V;Pd 400mW Max;Supply Volt 130Vac;Cap 400pF
6	BOV150S14K	9	SI	M1096x	Voltage Range 216-264V;Pd 600mW Max;Supply Volt 130Vac;Cap 900pF
7	BOV150B32K	9	ZnO		Voltage Range 216-264V;Pd 1.2Wmax,Supply Volt 130VAC;5nF
8	BOV250B25K	9	ZnO		Voltage Range 351-429V;Pd 1.0Wmax;Supply Volt 220VAC;1.8nF
9	SKVA14A150	9	ZnO	M942v	Vmax 150; Pav 600mW; Ipmax 4.0k
10	SKVA14A250	9	ZnO	M942x	Vmax 250; Pav 600mW; Ipmax 3.0k
11	SKVA14A420	9	ZnO	M942x	Vmax 420; Pav 600mW; Ipmax 4.0k
12	SKVA20B130	9	ZnO	M942u	Vmax 130; Pav 1.0W; Ipmax 6.0k
13	SKVA20B250	9	ZnO	M942w	Vmax 250; Pav 1.0W; Ipmax 6.0k
14	SKVA20B275	9	ZnO	M942w	Vmax 270; Pav 1.0W; Ipmax 6.0k
15	SKVA20B420	9	ZnO	M942y	Vmax 420; Pav 1.0W; Ipmax 6.0k
16	SKVA20B460	9	ZnO	M942y	Vmax 460;Pav 1.0W;Ip max 6.0k
17	SKVA20B510	9	ZnO	M942z	Vmax 510; Pav 1.0W; Ipmax 6.0k
18	SKVA20B550	9	ZnO	M942z	Vmax 550; Pav 1.0W; Ipmax 6.0k
19	SKVA20B1000	9	ZnO	M942aa	Vmax 1.0kV; Pav 1.0W; Ipmax 6.0k
20♦	V8ZA1	9	ZnO	M936†	Vm 5.5V; Ipk 100.0A; Vclamp 22.0V at Ipk 5.0A; Ct 4500pf
21♦	V8ZA2	9	ZnO	M936†	Vm 5.5V; Ipk 250.0A; Vclamp 20.0V at Ipk 5.0A; Ct 12000pf
22♦	V12ZA1	9	ZnO	M936†	Vm 8.0V; Ipk 250.0A; Vclamp 34.0V at Ipk 5.0A; Ct 3000pf
23♦	V12ZA2	9	ZnO	M936†	Vm 8.0V; Ipk 250.0A; Vclamp 30.0V at Ipk 5.0A; Ct 7500pf
24♦	V18ZA2	9	ZnO	M936†	Vm 14.0V; Ipk; 500.0A; Vclamp 39.0V at Ipk 5.0A; Ct 6000pf
25	V47ZA1(A)	9	ZnO	M936c	Symmetrical;NOM Volt 47 ±10% at 1.0mA;Applied V 38V;Avg Trans Diss 210mW;Cap 1000pf typ
26	V47ZA7(A)	9	ZnO	M936h	Symmetrical;NOM Volt 47 ±10% at 1.0mA;Applied V 38V;Avg Trans Diss 450mW;Cap 5000pf typ
27	V56ZA2	9	ZnO	M936c	Symmetrical;NOM Volt 56 ±10% at 1.0mA;Applied V 45V;Avg Trans Diss 220mW;Cap 800pf typ
28	V56ZA8	9	ZnO	M936j	Symmetrical;NOM Volt 56 ±10% at 1.0mA;Applied V 45V;Avg Trans Diss 450mW;Cap 4000pf typ
29	V68MA3B	9	ZnO	Alec	
30	V68ZA2	9	ZnO	M936d	Symmetrical;NOM Volt 68 ±10% at 1.0mA;Applied V 56V;Avg Trans Diss 240mW;Cap 700pf typ
31	V68ZA10	9	ZnO	M936k	Symmetrical;NOM Volt 68 ±10% at 1.0mA;Applied V 56V;Avg Trans Diss 500mW;Cap 3500pf typ
32	V82MA3A	9	ZnO	Alec	
33	V82MA3B	9	ZnO	Alec	
34	V82ZA2	9	ZnO	M936e	Symmetrical;NOM Volt 82 ±10% at 1.0mA;Applied V 66V;Avg Trans Diss 250mW;Cap 600pf typ
35	V82ZA12	9	ZnO	M936m	Symmetrical;NOM Volt 82 ±10% at 1.0mA;Applied V 66V;Avg Trans Diss 500mW;Cap 3000pf typ
36	V100MA4A	9	ZnO	Alec	
37	V100MA4B	9	ZnO	Alec	
38	V100ZA3	9	ZnO	M936f	Symmetrical;NOM Volt 100 ±10% at 1.0mA;Applied V 81V;Avg Trans Diss 260mW;Cap 500pf typ
39	V100ZA15	9	ZnO	M936n	Symmetrical;NOM Volt 100 ±10% at 1.0mA;Applied V 81V;Avg Trans Diss 550mW;Cap 2500pf typ
40	V120MA1A	9	ZnO	Alec	
41	V120MA2B	9	ZnO	Alec	
42	V120ZA1	9	ZnO	M936	Symmetrical;NOM Volt 120 ±10% at 1.0mA;Applied V 102V;Avg Trans Diss 200mW;Cap 200pf typ
43	V120ZA6	9	ZnO	M936g	Symmetrical;NOM Volt 120 ±10% at 1.0mA;Applied V 102V;Avg Trans Diss 450mW;Cap 1200pf typ
44	V130LA1	9	ZnO	M941	Applied Vrms 130V;Vpk 500V at 100Apk;Avg Trans Diss 240mW;Cap 250pf typ
45♦	V130LA2	9	ZnO	M941	Vm 175v ;Ipk 1200A ;Vclamp 340V at Ipk 10A; Ct 180 pf
46♦	V130LA10A	9	ZnO	M942a	Vm 175v ;Ipk 4500A ;Vclamp 340V at Ipk 50A; Ct 1000 pf
47♦	V130LA20A	9	ZnO	M942m	Vm 175v ;Ipk 6500A ;Vclamp 340V at Ipk 100A; Ct 1900 pf
48♦	V130LA20B	9	ZnO	M942m	Vm 175v;Ipk 6500A; Vclamp 325V at Ipk 00A; Ct 1900 pf
49	V130PA10A	9	ZnO	M943	Applied Vrms 130V;Vpk 450V at 100Apk;Max Avg Diss 8.0W;Var Volt 255V at 1.0mAAC
50♦	V130PA20A	9	ZnO	M943	Vm 175V;Ipk 6500A;Vclamp 360V at Ipk 00A; Ct 2400 pf
51	V130PA20B	9	ZnO	M943	Applied Vrms 130V;Vpk 340V at 100Apk;Max Avg Diss 15W;Var Volt 255V at 1.0mAAC
52	V130PA20C(A)	9	ZnO	M943	Applied Vrms 130V;Vpk 300V at 100Apk;Max Avg Diss 15W;Var Volt 255V at 1.0mAAC
53	V150LA1	9	ZnO	M941a	Applied Vrms 150V;Vpk 600V at 100Apk;Avg Trans Diss 240mW;Cap 150pf typ
54♦	V150LA2	9	ZnO	M941a	Vm 200v;Ipk 1200A; Vclamp 395V at Ipk 10A; Ct 150 pf
55♦	V150LA10A	9	ZnO	M942a	Vm 200v;Ipk 4500A; Vclamp 395V at Ipk 50A; Ct 800 pf
56♦	V150LA20A	9	ZnO	M942m	Vm 200v;Ipk 6500A; Vclamp 395V at Ipk 100A; Ct 1600 pf
57♦	V150LA20B	9	ZnO	M942m	Vm 200v;Ipk 6500A; Vclamp 360V at Ipk 100A; Ct 1600 pf
58	V150MA1A	9	ZnO	A1ec	Symmetrical;NOM Volt 150 ±15% at 1.0mA;Applied Vrms 88V;Avg Trans Diss 200mW;Cap 32pf typ
59	V150MA2B	9	ZnO	A1ec	Symmetrical;NOM Volt 150 ±10% at 1.0mA;Applied Vrms 92V;Avg Trans Diss 200mW;Cap 32pf typ
60	V150PA10A	9	ZnO	M943	Applied Vrms 150V;Vpk 550V at 100Apk;Max Avg Diss 8.0W;Var Volt 298V at 1.0mAAC
61♦	V150PA20A	9	ZnO	M943	Vm 200V;Ipk 6500A;Vclamp 420V at Ipk 100A; Ct 2000 pf
62♦	V150PA20C	9	ZnO	M943	Vm 200V;Ipk 6500A;Vclamp 360V at Ipk 00A; Ct 2000 pf
63	V150ZA1	9	ZnO	M936b	Symmetrical;NOM Volt 150 ±10% at 1.0mA;Applied V 127V;Avg Trans Diss 200mW;Cap 170pf typ
64	V150ZA8	9	ZnO	M936g	Symmetrical;NOM Volt 150 ±10% at 1.0mA;Applied V 127V;Avg Trans Diss 450mW;Cap 1000pf typ
65	V180MA1A	9	ZnO	A1ec	Symmetrical;NOM Volt 180 ±15% at 1.0mA;Applied Vrms 105V;Avg Trans Diss 200mW;Cap 27pf typ
66	V180MA3B	9	ZnO	A1ec	Symmetrical;NOM Volt 180 ±10% at 1.0mA;Applied Vrms 110V;Avg Trans Diss 200mW;Cap 27pf typ
67	V180ZA1	9	ZnO	M936b	Symmetrical;NOM Volt 180 ±10% at 1.0mA;Applied V 153V;Avg Trans Diss 200mW;Cap 140pf typ
68	V180ZA10	9	ZnO	M936h	Symmetrical;NOM Volt 180 ±10% at 1.0mA;Applied V 153V;Avg Trans Diss 450mW;Cap 800pf typ
69	V220MA2A	9	ZnO	A1ec	Symmetrical;NOM Volt 220 ±15% at 1.0mA;Applied Vrms 132V;Avg Trans Diss 200mW;Cap 21pf typ
70	V220MA4B	9	ZnO	A1ec	Symmetrical;NOM Volt 220 ±10% at 1.0mA;Applied Vrms 138V;Avg Trans Diss 200mW;Cap 21pf typ
71	V250LA2	9	ZnO	M941b	Applied Vrms 250V;Vpk 1000V at 100Apk;Avg Trans Diss 280mW;Cap 110pf typ
72♦	V250LA4	9	ZnO	M941b	Vm 330v;Ipk 1200A; Vclamp 650V at Ipk 10A; Ct 110 pf
73♦	V250LA20A	9	ZnO	M942b	Vm 330v;Ipk 4500A; Vclamp 650V at Ipk 50A; Ct 500 pf
74♦	V250LA40A	9	ZnO	M942n	Vm 330v;Ipk 6500A; Vclamp 650V at Ipk 100A; Ct 1000 pf
75♦	V250LA40B	9	ZnO	M942n	Vm 330v;Ipk 6500A; Vclamp 620V at Ipk 100A; Ct 1000 pf
76♦	V250PA40A	9	ZnO	M943a	Vm 330V;Ipk 6500A;Vclamp 675V at Ipk 00A; Ct 1200 pf
77♦	V250PA40C	9	ZnO	M943a	Vm 330V;Ipk 6500A;Vclamp 620V at Ipk 100A; Ct 1200 pf
78	V270MA2A	9	ZnO	A1ec	Symmetrical;NOM Volt 270 ±15% at 1.0mA;Applied Vrms 163V;Avg Trans Diss 200mW;Cap 17pf typ
79	V270MA4B	9	ZnO	A1ec	Symmetrical;NOM Volt 270 ±10% at 1.0mA;Applied Vrms 171V;Avg Trans Diss 200mW;Cap 17pf typ
80	V275LA2	9	ZnO	M941c	Applied Vrms 275V;Vpk 1100V at 100Apk;Avg Trans Diss 280mW;Cap 100pf typ
81♦	V275LA20A	9	ZnO	M942c	Vm369V;Ipk 4500A;Vclamp 710V at Ipk 50A; Ct 450 pf
82♦	V275LA40A	9	ZnO	M942n	Vm369V;Ipk 6500A;Vclamp 710V at Ipk 100A; Ct 900pf
83♦	V275LA40B	9	ZnO	M942n	Vm369V;Ipk 6500A;Vclamp 680V at Ipk 100A; Ct 900pf
84♦	V275PA40A(A)	9	ZnO	M943a	Vm 369V;Ipk 6500A;Vclamp 740V at Ipk 100A; Ct 1100 pf
85	V275PA40B	9	ZnO	M943a	Applied Vrms 275V;Vpk 700V at 100Apk;Max Avg Diss 13W;Var Volt 523V at 1.0mAAC
86♦	V275PA40C	9	ZnO	M943a	Vm 369V;Ipk 6500A;Vclamp 680V at Ipk 100A; Ct 1100 pf
87♦	V282BB60	9	ZnO	Alec	Vm3500V;Ipk 70.000A;Vclamp 7800Vat 200A; Ct 800pf
88	V300LA2	9	ZnO	M941d	Applied Vrms 300V;Vpk 1250V at 100Apk;Avg Trans Diss 280mW;Cap 90pf typ
89♦	V300LA4	9	ZnO	M941d	Vm405V;Ipk 1200A;Vclamp 775V at Ipk 10A; Ct 90pf
90♦	V320LA20A	9	ZnO	M942d	Vm 420V;Ipk 4500A;V clamp 850V at Ipk 50A; Ct 380 pf
91♦	V320LA40B	9	ZnO	M942p	Vm 420V;Ipk 6500A;Vclamp 810V at Ipk 100A; Ct 750 pf
92♦	V320PA40A	9	ZnO	M943a	Vm 420V;Ipk 6500A;Vclamp 850V at Ipk 100A; Ct 1000 pf
93♦	V320PA40C	9	ZnO	M943a	Vm 420V;Ipk 6500A;Vclamp 800V at Ipk 100A; Ct 1000 pf
94	V330MA2A	9	ZnO	A1ec	Symmetrical;NOM Volt 330 ±15% at 1.0mA;Applied Vrms 188V;Avg Trans Diss 200mW;Cap 14pf typ
95	V330MA5B	9	ZnO	A1ec	Symmetrical;NOM Volt 330 ±10% at 1.0mA;Applied Vrms 200V;Avg Trans Diss 200mW;Cap 14pf typ
96	V390MA3A	9	ZnO	A1ec	Symmetrical;NOM Volt 390 ±15% at 1.0mA;Applied Vrms 234V;Avg Trans Diss 200mW;Cap 12pf typ
97	V390MA6B	9	ZnO	A1ec	Symmetrical;NOM Volt 390 ±10% at 1.0mA;Applied Vrms 242V;Avg Trans Diss 200mW;Cap 12pf typ
98	V420PA20A	9	ZnO	M943b	Applied Vrms 420V;Vpk 1400V at 100Apk;Max Avg Diss 5.0W;Var Volt 802V at 1.0mAAC
99♦	V420PA40A	9	ZnO	M943b	Vm 560V;Ipk 6500A;Vclamp 1160V at Ipk 100A; Ct 120 pf
100♦	V420PA40C	9	ZnO	M943b	Vm 560V;Ipk 6500A;Vclamp 1050V at Ipk 100A; Ct 1200 pf
101	V430MA3A	9	ZnO	A1ec	Symmetrical;NOM Volt 430 ±15% at 1.0mA;Applied Vrms 253V;Avg Trans Diss 200mW;Cap 11pf typ
102	V430MA7B	9	ZnO	A1ec	Symmetrical;NOM Volt 430 ±10% at 1.0mA;Applied Vrms 264V;Avg Trans Diss 200mW;Cap 11pf typ
103♦	V480PA80A	9	ZnO	M943b	Vm 640V;Ipk 6500A;Vclamp 1280V at Ipk 100A; Ct 1100 pf
104♦	V480PA80C	9	ZnO	M943b	Vm 640V;Ipk 6500A;Vclamp 1160V at Ipk 100A; Ct 1100 pf
105♦	V510PA80A	9	ZnO	M943b	Vm 675V;Ipk 6500A;Vclamp 1410V at Ipk 100A; Ct 1000 pf
106♦	V510PA80C	9	ZnO	M943b	Vm 675V;Ipk 6500A;Vclamp 1280V at Ipk 100A; Ct 1000 pf
107♦	V571BA60	9	ZnO	M†	Vm 730.0V; Ipk 70000.0A;Vclamp 1530.0V at Ipk 200.0A; Ct 4300pf
108♦	V575PA80C	9	ZnO	M943b	Vm 730V;Ipk 6500A;Vclamp 1410V at Ipk 100A; Ct 900 pf
109	V750HE700	9	ZnO	Mp43†	
110	ZZZZD710A	9	ZZZ		

LINE No.	3 TYPE NUMBER	1 TYPE	2 MAT.	DWG. NO.	DESCRIPTION
ADDITIONAL DIODE DEVICES					
3	1N6315	10			Vz2 nom,±5%,Iz 20mA 4.3V;Zz 18Ω;IZM 140mA;VR 1.0V;ir surge 1.4A;PT 750mW
4	1SV45	10		F132	Snap-off Diode;VR 55V;Cj 2.0pF max
5	1SV114(A)	10		DO350	VR max 15V;TJ(max) 125;IR max 0.5uA;C9.0pF at VR 6.0V f1.0MHz
6	1SV125(A)	10		A277s	VR max 15V;TJ(max) 125;IR max 0.5uA;C9.0pF at VR 6.0V f1.0MHz
7	1SV132(A)	10		DO34	VR max 30V;F(BR)R 30V min at IR 10uA;Cratio C(3V)/C(25V) 6.0 max;Pd 150mW
8	1SV136(A)	10		A442	VR max 30V;F(BR)R 30V min at IR 10uA;Cratio C(3V)/C(25V) 6.0 max; Pd 100mW
9	1SV141(A)	10		A442	VR max 30V; V(BR) R 30v typ at 10uA; Cratio C(3V)/C(25V) 6.0 max; Pd 100mW
10	2KZ20A	10		A3q§	Zener Klipper;VR 16.2V;clamp volt 29.1V at Ipp 51.5A;tolerence 5%
11	2KZ20B	10		A3q⊠	Zener Klipper;VR 16.2V;clamp volt 29.1V at Ipp 51.5A;tolerence 20%
12	2KZ22	10		A3q§	Zener Klipper;VR 17.8V;Clamp volt 31.9V at Ipp 47A;tolerence 10%
13	2KZ22A	10		A3q§	Zener Klipper;VR 17.8V;Clamp volt 31.9V at Ipp 47A;tolerence 5%
14	2KZ22B	10		A3q⊠	Zener Klipper;VR 17.8V;Clamp volt 31.9V at Ipp 47A;tolerence 20%
15	2KZ24	10		A3q§	Zener Klipper;VR 19.4V;Clamp volt 34.7V at Ipp 43A;tolerence 10%
16	2KZ24A	10		A3q§	Zener Klipper;VR 19.4V;Clamp volt 34.7V at Ipp 43A;tolerence 5%
17	2KZ24B	10		A3q⊠	Zener Klipper;VR 19.4V;Clamp volt 34.7V at Ipp 43A;tolerence 20%
18	2KZ27	10		A3q§	Zener Klipper;VR 21.8V;Clamp volt 39.1V at Ipp 38.5A;tolerence 10%
19	2KZ27A	10		A3q§	Zener Klipper;VR 21.8V;Clamp volt 39.1V at Ipp 38.5A;tolerence 5%
20	2KZ27B	10		A3q⊠	Zener Klipper;VR 21.8V;Clamp volt 39.1V at Ipp 38.5A;tolerence 20%
21	2KZ30	10		A3q§	Zener Klipper;VR 24.3V;Clamp volt 43.5V at Ipp 34.5A;tolerence 10%
22	2KZ30A	10		A3q§	Zener Klipper;VR 24.3V;Clamp volt 43.5V at Ipp 34.5A;tolerence 5%
23	2KZ30B	10		A3q⊠	Zener Klipper;VR 24.3V;Clamp volt 43.5V at Ipp 34.5A;tolerence 20%
24	2KZ33	10		A3q§	Zener Klipper;VR 26.8V;Clamp volt 47.7V at Ipp 31.5A;tolerence 10%
25	2KZ33A	10		A3q§	Zener Klipper;VR 26.8V;Clamp volt 47.7V at Ipp 31.5A;tolerence 5%
26	2KZ33B	10		A3q⊠	Zener Klipper;VR 26.8V;Clamp volt 47.7V at Ipp 31.5A;tolerence 20%
27	2KZ36	10		A3q⊠	Zener Klipper;VR 29.1V;Clamp volt 52V at Ipp 29A;tolerence 10%
28	2KZ36A	10		A3q§	Zener Klipper;VR 29.1V;Clamp volt 52V at Ipp 29A;tolerence 5%
29	2KZ36B	10		A3q⊠	Zener Klipper;VR 29.1V;Clamp volt 52V at Ipp 29A;tolerence 20%
30	2KZ39	10		A3Q§	Zener Klipper;VR 31.6V; Clamp volt 56.4V at Ipp 26.5A; tolerance 5%
31	2KZ39A	10		A3q§	Zener Klipper;VR 31.6V;Clamp volt 56.4V at Ipp 26.5A;tolerence 5%
32	2KZ39B	10		A3q⊠	Zener Klipper;VR 31.6V;Clamp volt 56.4V at Ipp 26.5A;tolerence 20%
33	2KZ43	10		A3q§	Zener Klipper;VR 34.8V;Clamp volt 61.9V at Ipp 24A;tolerence 10%
34	2KZ43A	10		A3q§	Zener Klipper;VR 34.8V;Clamp volt 61.9V at Ipp 24A;tolerence 5%
35	2KZ62A	10		A3q§	Zener Klipper;VR 50.2V;Clamp volt 89V at Ipp 16.9A;tolerence 5%
36	2KZ90A	10		A3q⊠	Zener Klipper;VR 73.7V;Clamp volt 131V at Ipp 11.4A;tolerence 5%
37	2KZ180B	10		A3q⊠	Zener Klipper;VR 146V;Clamp volt 258V at Ipp 5.8A;tolerence 20%
38	2KZ200	10		A3q§	Zener Klipper;VR 162;Clamp volt 287V at Ipp 5.2A;tolerence 10%
39	2KZ200A	10		A3q§	Zener Klipper;VR 162;Clamp volt 287V at Ipp 5.2A;tolerence 5%
40	2KZ200B	10		A3q⊠	Zener Klipper;VR 162;Clamp volt 287V at Ipp 5.2A;tolerence 20%
41	BD1-05	10		A435	Breakover Diode;VBO 500V;IBO 10mA at 25°C;IT 1.0A at 55°C
42	BD1-06	10		A435	Breakover Diode;VBO 600V;IBO 10mA at 25°C;IT 1.0A at 55°C
43	BD1-07	10		A435	Breakover Diode;VBO 700V;IBO 10mA at 25°C;IT 1.0A at 55°C
44	BD1-08	10		A435	Breakover Diode;VBO 800V;IBO 10mA at 25°C;It 1.0A at 55°C
45	BD1-09	10		A435	Breakover Diode;VBO 900V;IBO 10mA at 25°C;IT 1.0A at 55°C
46	BD1-10	10		A435	Breakover Diode;VBO 1.0kV;IBO 10mA at 25°C;IT 1.0A at 55°C
47	BYS94	10		M1220	PIV 50V IF(AVE)2x60A IF(PEAK)°25°C 855A VF(MAX).89V TJ(MAX)175°C
48	BYS95	10		M1220	PIV 60V IF(AVE) 2x60A IF(PEAK) °25°C 855A VF(MAX).89V TJ(MAX) 175°C
49	BYS96	10		M1220	PIV 50V IF(AVE) 2x100A IF(PEAK) °25°C 1425A VF(MAX).80V TJ(MAX) 175°C
50	BYS97	10		M1220	PIV 60V IF(AVE) 2x100A IF(PEAK) °25°C 1425A VF(MAX).80V TJ(MAX) 175°C
51	HV23G	10		DO35	PN Junction for Volt and Temp Comp;VF .58 to .69V at 3.0mA;VR -3V;Tc -2.0mV/°C
52	HV70	10		DO35	PN Junction for Volt and Temp Comp;VF .61 to .81V at 0.5mA;VR -5V;Pd 250mW
53	KV3111	10		M1143	Precision Hyperabrupt Tuning Diode;VR 30V;IF 200mA
54	MA412	10		M13	Freq. Range-26500-75000; Guide Mounted; Video device.
55	MA428	10		M12	Freq. Range-50000-75000; RG-98/U Guide Mounted; Video use also.
56	MA4148	10		M139	Power Indicator; Test freq-139,440Mc-10dbm min. sensitivity.
57	Q05B	10	Δ	M1323#	Controlled Avalanche Diode;Vr 100V;IF(av) 20A;VF 1.3V at IF 60A
58	Q05C	10	Δ	M1323#	Controlled Avalanche Diode;Vr 200V;IF(av) 20A;VF 1.3V at IF 60A
59	Q05D	10	Δ	M1323#	Controlled Avalanche Diode;Vr 300V;IF(av) 20A;VF 1.3V at IF 60A
60	Q06B	10	Δ	M1323⊠	Controlled Avalanche Diode;Vr 100V;IF(av) 20A;VF 1.3V at IF 60A
61	Q06C	10	Δ	M1323⊠	Controlled Avalanche Diode;Vr 200V;IF(av) 20A;VF 1.3V at IF 60A
62	Q06D	10	Δ	M1323⊠	Controlled Avalanche Diode;Vr 300V;IF(av) 20A;VF 1.3V at IF 60A
63	S11B	10	Δ	M1322#	Controlled Avalanche Diode;Vr 100V;IF(av) 15A;VF 1.3V at IF 45A
64	S11C	10	Δ	M1322#	Controlled Avalanche Diode;Vr 200V;IF(av) 15A;VF 1.3V at IF 45A
65	S11D	10	Δ	M1322#	Controlled Avalanche Diode;Vr 300V;IF(av) 15A;VF 1.3V at IF 45A
66	S12B	10	Δ	M1322#	Controlled Avalanche Diode;Vr 100V;IF(av) 15A;VF 1.3V at IF 45A
67	S12C	10	Δ	M1322#	Controlled Avalanche Diode;Vr 200V;IF(av) 15A;VF 1.3V at IF 45A
68	S12D	10	Δ	M1322#	Controlled Avalanche Diode;Vr 300V;IF(av) 15A;VF 1.3V at IF 45A
69	S15B	10	Δ	M1321⊠	Controlled Avalanche Diodes;Vr 100V;IF(av) 10A;VF 1.3V at IF 30A
70	S15C#B	10	Δ	M1321⊠	Controlled Avalanche Diodes;Vr 200V;IF(av) 10A;VF 1.3V at IF 30A
71	S15D	10	Δ	M1321⊠	Controlled Avalanche Diodes;Vr 300V;IF(av) 10A;VF 1.3V at IF 30A
72	S16D	10	Δ	M1321⊠	Controlled Avalanche Diode;Vr 300V;IF(av) 10A;VF 1.3V at IF 30A
73	SS1	10		A1aab	VF .2-.5V at 10uA,.64-.72V at 10mA,.90V at 100mA;VR 3.0V at 10uA
74	U17B	10	Δ	M313d	Controlled Avalanche Diodes;Vr 100V;IF(av) 2.5A;VF 1.1V at IF 2.5A
75	U17C	10	Δ	M313d	Controlled Avalanche Diodes;Vr 200V;IF(av) 2.5A;VF 1.1V at IF 2.5A
76	U17D	10	Δ	M313d	Controlled Avalanche Diodes;Vr 300V;IF(av) 2.5A;VF 1.1V at IF 2.5A
77	U17E	10	Δ	M313d	Controlled Avalanche Diodes;Vr 400V;IF(av) 2.5A;VF 1.1V at IF 2.5A
78	V17A	10	Δ	M313d	Controlled Avalanche Diodes;Vr 50V;IF(av) 1.3A;VF 1.1V at IF 1.3A
79	V17B	10	Δ	M313d	Controlled Avalanche Diodes;Vr 100V;IF(av) 1.3A;VF 1.1V at IF 1.3A
80	V17C	10	Δ	M313d	Controlled Avalanche Diodes;Vr 200V;IF(av) 1.3A;VF 1.1V at IF 1.3A
81	V17D	10	Δ	M313d	Controlled Avalanche Diodes;Vr 300V;IF(av) 1.3A;VF 1.1V at IF 1.3A
82	V17E	10	Δ	M313d	Controlled Avalanche Diodes;Vr 400V;IF(av) 1.3A;VF 1.1V at IF 1.3A
83	V330R-4	10			Applied Vrms 210V;Avg Trans Diss .4W;45pF typ
84	V330R-11	10			Applied Vrms 210V;Avg Trans Diss .6W;165pF typ
85	V330R-13	10			Applied Vrms 210V;Avg Trans Diss .7W;335pF typ
86	V330R-34	10			Applied Vrms 210V;Avg Trans Diss .9W;745pF typ
87	V350R-4	10			Applied Vrms 220V;Avg Trans Diss .4W;45pF typp
88	V350R-11	10			Applied Vrms 220V;Avg Trans Diss .6W;165pF typ
89	V350R-13	10			Applied Vrms 220V;Avg Trans Diss .7W;335pF typ
90	V350R-36	10			Applied Vrms 220V;Avg Trans Diss .95W;700pF typ
91	V500R-6	10			Applied Vrms 315V;Avg Trans Diss .45W;40pF typ
92	V500R-16	10			Applied Vrms 315V;Avg Trans Diss .75W;145pF typ
93	V500R-22	10			Applied Vrms 315V;Avg Trans Diss .85W;225pF typ
94	V500R-50	10			Applied Vrms 315V;Avg Trans Diss 1.0W;500pF typ
95	V550R-6	10			Applied Vrms 350V;Avg Trans Diss .45W;40pF typ
96	V550R-18	10			Applied Vrms 350V;Avg Trans Diss .75W;130pF typ
97	V550R-24	10			Applied Vrms 350V;Avg Trans Diss .85W;205pF typ
98	V550R-55	10			Applied Vrms 350V;Avg Trans Diss 1.0W;460pF typ
99	BYV27-50	10	$	A333c	Avalanche Diode;Vrrm 50V;IF 2.0A
100	BYV27-100	10	$	A313	Avalanche diode;Vrrm 100V;If 2.0A;Trr 25ns at If .50A
101	BYV27-150	10	$	A313	Avalanche diode;Vrrm 150V;If 2.0A;Trr 25ns at If .50A
102	BYV27-200	10	$	A313	Avalanche diode;Vrrm 200V;If 2.0A;Trr 25ns at If .50A
103	BYV28-50	10	$	A313	Avalanche diode;Vrrm 50V;If 3.5A;Trr 30ns at If .50A
104	BYV28-100	10	$	A313	Avalanche diode;Vrrm 100V;If 3.5A;Trr 30ns at If .50A
105	BYV28-150	10	$	A313	Avalanche diode;Vrrm 150V;If 3.5A;Trr 30ns at If .50A
106	BYV28-200	10	$	A313	Avalanche diode;Vrrm 200V;If 3.5A;Trr 30ns at If .50A
107	PR280-RT	10	Ge	TO3	TV Damper;PRV 320;IF rms 10A;IFM(Surge) 25A
108	PR293-RT	10	Ge	DO7	Varactor;PRV 14V;IF 500mA;Cj 22pF at VR -10V;Cap ratio 2.6pF/V
109	PTC208	10	Se	A167b	TV Focus;PIV 6.5V;IF 2mA;Ir at PIV 150uA
110	PTC403	10	Se	M885	TV Convergence;PIV 18V;Max If 65mA

IN ORDER OF (1) TYPE (2) MAT AND (3) TYPE NO.

LINE No.	3 TYPE NUMBER	1 TYPE	2 MAT.	DWG. NO.	DESCRIPTION
1	PTC404	10	Se	M885a	TV Convergence;PIV 18V;Max If 65mA
2	PTC405	10	Se	M885b	TV Convergence;PIV 18V;Max If 65mA
3	PTC406	10	Se	M594f	TV Horizontal AFC;PIV 47V;Max If 250mA
4	PTC602	10	Se	TO92	TV HV Tripler;EL(1N) Peak 8.5V;E(0) No Load 25kV;IO 1.0mA;EC(Focus) at 250uA 8.5kV
5	1N5759A	10	Si	M859	Multijunction Diode;Vswitch 26V;I peak Pulse 2.0A;Pd 300mW
6	1N5760A	10	Si	M859	Multijunction Diode;Vswitch 30V;I peak Pulse 2.0A;Pd 300mW
7	1S144	10	Si	DO7	Alloy Junction Meter Protector;Imax 65mA;IF 10mA min at VF .80V;IR 500nA max at VR 1.0V
8	1S2588	10	Si	DO35	Band SW Diode;VF 1.0V max at 100mA,IR 100nA max at 15V;C 2.0pF max at VS 15V
9	AP3898	10	Si △	DO35	VR 2.0V IT 20mA ZT at It 10.0Ohm IR leakage at 10V 10uA
10♦	APD300	10	Si △	DO35	VR 2.4-2.65V IT 100mA IR leakage at 30V 10uA
11♦	APD400	10	Si △	DO35	VR 3.16-3.49V IT 100mA IR leakage at 30V 10uA
12	BA243S	10	Si	DO35	VR 35V Cd 1.5pF at VR 5.0V RF 0.7Ohm IF 10mA VHF Tuner
13	BA244S	10	Si	DO35	VR35V Cd1.5pF at VR5.0V RF0.5ohm IF 10mA VHF Tuner
14	BA284	10	Si	DO35	VR 35V Cd 1.0pF at VR 20V RF 0.6Ohm IF 10mA VHF Tuner
15	BAS18	10	Si	DO41	Avalanche Diode;VRW 300;IF(AV) 450mA;IFSM 4A;trr 1.0uS
16	BB112	10	Si ▼	TO92	AM Tuning Diode; VR 12; IF 50mA; IR 50nA; CD 540pF max.
17	BB304	10	Si	TO106	Cd 42-47.5pF Vr 2.0V VHF (FM) Double Diode for car radio
18	BB312	10	Si	TO106	Cd 460-530pF Vr1.0V AM Double Diode
19	BB313	10	Si	M1217	Cd 485pF VR 1.0V AM Triple Diode for car radio
20	BB409	10	Si	DO35	Cd 4.5-5.6pF VR 25V VHF Tuner
21	BB505B	10	Si	DO35	Cd 2.0-2.3pF VR 25V UHF Tuner
22	BB505G	10	Si	DO35	Cd 1.8-2.5pF VR 25V VHF Tuner
23	BB609A	10	Si	DO35	Cd 2.6-3.0pF VR 28V CATV Tuner
24	BB609B	10	Si	DO35	Cd 2.8-3.2pF VR 28V CATV Tuner
25	BD8-05	10	Si	DO4	Breakover Diode; IBO 20mA; VBO 500V; VTM 2.0V
26	BD8-06	10	Si	DO4	Breakover Diode; IBO 20mA; VBO 600V; VTM 2.0V
27	BD8-07	10	Si	DO4	Breakover Diode; IBO 20mA; VBO 700V; VTM 2.0V
28	BD8-08	10	Si	DO4	Breakover Diode; IBO 20mA; VBO 800V; VTM 2.0V
29	BD8-09	10	Si	DO4	Breakover Diode; IBO 20mA; VBO 900V; VTM 2.0V
30	BD8-10	10	Si	DO4	Breakover Diode; IBO 20mA; VBO 1.0k; VTM 2.0V
31	BOD1-14R	10	Si	M1090a	Breakover Diode; VBR1.4kV;IF 300mA; dv/dt1.0k V/uS min; Min Hold Volt 4.0V; Hold I 10 m
32	CG-1/DG-1	10	Si	E204p	Clamp/Damp Rect;Pk Rep I(F)10A;V(R)1.4K;V(RM)min 1.4k;IF Avg 1.5A;IF(PK) Surge 50A
33	CG-2/DG-2	10	Si	E204p	Clamp/Damp Rect;IF(Surge) 65A;IF Avg 2.0A;V(RM) 1.4k;V(R) 1.4k;I(RM) Max 5uA
34	CG-3/DG-3	10	Si	E204p	Clamp/Damp Rect;I(F) Surge 125A;I(F) Avg 3.0A;V(RM) Min 1.4k;I(RM) Max 5uA
35	EFR1A	10	Si	u10b	Rectifier Chip; PRV 50V; IF 1.0; IFSM 50; VF 0.9V
36	EFR1B	10	Si	u10b	Rectifier Chip; PRV 100V; IF 1.0; IFSM 50; VF 0.9V
37	EFR1C	10	Si	u10b	Rectifier Chip; PRV 150V; IF 1.0; IFSM 50; VF 0.9V
38	EFR1D	10	Si	u10b	Rectifier Chip; PRV 200V; IF 1.0; IFSM 50; VF 0.9V
39	EFR3A	10	Si	u10c	Rectifier Chip; PRV 50V; IF 3.0; IFSM 75; VF 0.9V
40	EFR3B	10	Si	u10c	Rectifier Chip; PRV 100V; IF 3.0; IFSM 75; VF 0.9V
41	EFR3C	10	Si	u10c	Rectifier Chip; PRV 150V; IF 3.0; IFSM 75; VF 0.9V
42	EFR3D	10	Si	u10c	Rectifier Chip; PRV 200V; IF 3.0; IFSM 75; VF 0.9V
43	EFR5A	10	Si	u10d	Rectifier Chip; PRV 50V; IF 5.0; IFSM 125; VF 0.9V
44	EFR5B	10	Si	u10d	Rectifier Chip; PRV 100V; IF 5.0; IFSM 125; VF 0.9V
45	EFR5C	10	Si	u10d	Rectifier Chip; PRV 150V; IF 5.0; IFSM 125; VF 0.9V
46	EFR5D	10	Si	u10d	Rectifier Chip; PRV 200V; IF 5.0; IFSM 125; VF 0.9V
47	EFR8A	10	Si	u10e	Rectifier Chip; PRV 50V; IF 8.0; IFSM 300; VF 0.9V
48	EFR8B	10	Si	u10e	Rectifier Chip; PRV 100V; IF 8.0; IFSM 300; VF 0.9V
49	EFR8C	10	Si	u10e	Rectifier Chip; PRV 150V; IF 8.0; IFSM 300; VF 0.9V
50	EFR8D	10	Si	u10e	Rectifier Chip; PRV 200V; IF 8.0; IFSM 300; VF 0.9V
51♦	HSCH1111	10	Si ♦	u20k	Diode Chip for Medical Application; VBR 70; IR 50nA;Cj 1.7p; VF 1.0 max
52	HVR1	10	Si	DO27	Max Ratings: VE .70V/IF 25mA
53	HVR2	10	Si	DO27	Max Ratings: VE 1.33V/IF 25mA
54	HVR3	10	Si	DO27	Max Ratings:VE 2.12V/IF 25mA
55	HVR4	10	Si	DO27	Max Ratings: VE 2.67V/IF 25mA
56	HVR6	10	Si	DO27	Max Ratings: VE 4.19V/IF 25mA
57	K20	10	Si	DO7	Instrument Probe Diode;Test Frequency-10Gc/s.
58	MA522	10	Si	M989	Lambda Type Negative Resistance Device Vp 0.3-3.0V,Vv 2.5-5.5V,Ip 0.06-0.45mA,Vfb 20v(typ)
59	ML4202	10	Si	F27	Microwave Limiter Cj .3pf;VB 20V;Rf 0.9Ω;fco 200GHz.
60	ML4204	10	Si	F27	Microwave Limiter Cj .2pf;VB 15V;Rf 1.0Ω;fco 220GHz.
61	ML4206	10	Si	F27	Microwave Limiter Cj .1pf;VB 15V;Rf 1.0Ω;fco 250GHz.
62	ML4402	10	Si	F27	Microwave Comb Generator Ts 50pS;TL 20ns;fco 250GHz.
63	MV1401	10	Si	DO14	VR 12V Max at IR 10uA;CT 468-633pF;Tuning Ratio C1/C10 14MiN at 1.0MHz;PD 0.4W
64	MV1403	10	Si	DO7	VR 12V Max at IR 10uA;CT 140-210pF;Tuning Ratio C1/C10 10Min at 1.0MHz;Pd 0.4W
65	MV1404	10	Si	DO7	VR 12V Max at IR 10uA;CT 96-144pF;Tuning Ratio C1/C10 10Min at 1.0MHz;Pd 0.4W
66	MV1405	10	Si	DO7	VR 12V Max at IR 10uA;CT 200-300pF;Tuning Ratio C1/C10 10Min at 1.0MHz;Pd 0.4W
67	MV3102	10	Si	M1227	VR 30V Max at IR 10uA;CT 20-25pF at 3.0 Vdc;C ratio C3/C25 4.5Min at 1.0MHz;Pd 0.4W
68	MV3103	10	Si	M1227	VR 30V Max at IR 10uA;CT 19-26pF at 3.0 Vdc;C ratio C3/C25 4.0Min at 1.0MHz;Pd 0.4W
69	MV3140	10	Si	M1227	VR 30V Max at IR 10uA;CT 10.5pF Typ at VR 3.0Vdc;C ratio C3/C25 4.5 at 1.0MHz;Pd 0.4W
70	MV3141	10	Si	M1227	VR 30V Max at IR 10uA;CT 10.5pF Typ at VR 3.0 Vdc;C ratio C3/C25 4.0 at 1.0MHz;Pd 0.4W
71	MV3142	10	Si	M1227	VR 30V Max at IR 10uA;CT 10.5pF Typ at VR 3.0 Vdc;C ratio C3/C25 3.5 at 1.0MHz;Pd 0.4W
72	MVAM108	10	Si	M859	Tuning Diode;for Tuning AM Receivers;VR 12V max;IF 50mA
73	MVAM109	10	Si	M859	Tuning Diode;for Tuning AM Receivers;VR 15V max;IF 50mA
74	MVAM115	10	Si	M859	Tuning Diode;for Tuning AM Receivers;VR 18V max;IF 50mA
75	MVAM125	10	Si	M859	Tuning Diode;for Tuning AM Receivers;VR 28V max;IF 50mA
76	PR222-RT	10	Si	A69a	Switching,TV trace/commutating;PRV 850V;trr 1.0us
77	PR270-RT	10	Si	DO7	Switching,TV sync,detector/c lamp;PRV 800V;IF rms 200mA
78	PR292-RT	10	Si	DO1	TV Damper;PRV 1.5k;IF rms 1.5A;IFM(Surge) 100A;VF 1.2V;IR10uA;trr 1.0us
79	PR296-RT	10	Si	DO1	TV Damper;PRV 1.2k;IF rms 0.5A;IFM(Surge) 35A;VF 1.3V;IR10uA;trr 500ns
80	PR339-RT	10	Si	A69a	Fast Recovery Rectifier;PRV 800V;IF rms 1.5A;trr 0.5us
81	PR340-RT	10	Si	S498	Fast Recovery Rectifier;PRV 800V;IF rms 4.5A;trr 0.5us
82	PR345-RT	10	Si	F125	TV Damper;PRV 5.0k;IF rms .75A;IFM(Surge) 50A;VF 6.0V;IR5.0uA
83	PTC601	10	Si	TO92	TV HV Quadrupler;E(1N)Peak 8kV;E(0)No Load 24kV;IO 2.25mA;E(Focus) at 250uA,8kV
84	PTC603	10	Si	TO92	TV HV Tripler;EL(1N) Peak 8.5V;E(0) No Load 24kV;IO 2.0mA;EC(Focus) at 250uA 8.5kV
85	RGPP5A	10	Si	u10d	Rectifier Chip; PRV 50V; IF 5.0A; VF 1.2; IR 25uA
86	RGPP5B	10	Si	u10d	Rectifier Chip;PRV 100;IF 5.0A;VF1.2;IR 25uA
87	RGPP5D	10	Si	u10d	Rectifier Chip;PRV 200;IF 5.0A;VF1.2;IR 25uA
88	RGPP5G	10	Si	u10d	Rectifier Chip;PRV 400;IF 5.0A;VF1.3;IR 25uA
89	RGPP5J	10	Si	u10d	Rectifier Chip;PRV 600;IF 5.0A;VF1.3;IR 25uA
90	RM25	10	Si	A344h	Avalanche diode;Vz 50V-61.5V at 1.0mA;IR 5.0uAA
91	RM26	10	Si	A344h	Avalanche diode;Vz 60V-70V at 1.0mA;IR 5.0uA
92	SA02PCN/R022(A)	10	Si	DO4	Avalanche Diode:VRRM 200V at 2.0mA IRRM:VFM 2.07V at 78A
93	SA03PCN/R022(A)	10	Si	DO4	Avalanche Diode:Varm 300V at 2.0mA IRRM:VFM 2.07V at 78A
94	SA04PCN/R022(A)	10	Si	DO4	Avalanche Diode:VRRM 400V at 2.0mA IRRM:VFM 2.07V at 78A
95	SA05PCN/R022(A)	10	Si	DO4	Avalanche Diode:VRRM 500V at 2.0mA IRRM:VFM 2.07V at 78A
96	SA06PCN/R022(A)	10	Si	DO4	Avalanche Diode:VRRM 600V at 2.0mA IRRM:VFM 2.07V at 78A
97	SA07PCN/R022(A)	10	Si	DO4	Avalanche Diode:VRRM 700V at 2.0mA IRRM:VFM 2.07V at 78A
98	SA08PCN/R022(A)	10	Si	DO4	Avalanche Diode:VRRM 800V at 2.0mA IRRM:VFM 2.07V at 78A
99	SA09PCN/R022(A)	10	Si	DO4	Avalanche Diode:VRRM 900V at 2.0mA IRRM:VFM 2.07V at 78A
100	SA10PCN/R022(A)	10	Si	DO4	Avalanche Diode:VRRN 1.0KV at 2.0mA IRRM:VFM 2.07V at 78A
101	SA10PCN/R031(A)	10	Si	DO4	Avalanche Diode:VRRM 1.0KV at 2.0mA IRRM:VFM 1.48V at 78.5A
102	SA10PCN/R051(A)	10	Si	DO5	Avalanche Diode VRRM 1.0KV at 2.0mA IRRM VFM 1.44V at 132A
103	SA10PCN/R061(A)	10	Si	DO5	Avalanche Diode VRRM 1.0KV at 2.0mA IRRM VFM 1.6V at 190A
104	SA11PCN/R022(A)	10	Si	DO4	Avalanche Diode:VRRM 11KV at 2.0mA IRRM:VFM 2.07V at 78A
105	SA11PCN/R031(A)	10	Si	DO4	Avalanche Diode:VRRM 1.1KV at 2.0mA IRRM:VFM 1.48V at 78.5A
106	SA11PCN/R051(A)	10	Si	DO5	Avalanche Diode VRRM 1.1KV at 2.0mA IRRM VFM 1.44V at 132A
107	SA11PCN/R061(A)	10	Si	DO5	Avalanche Diode VRRM 1.1KV at 2.0mA IRRM VFM 1.61V at 190A
108	SA12PCN/R031(A)	10	Si	DO4	Avalanche Diode VRRM 1.2KV at 2.0mA IRRM VFM 1.48V at 78.5A
109	SA12PCN/R051(A)	10	Si	DO5	Avalanche Diode VRRM 1.2KV at 2.0mA IRRM VFM 1.44V at 132A
110	SA12PCN/R061(A)	10	Si	DO5	Avalanche Diode VRRM 1.2KV at 2.0mA IRRM VFM 1.61V at 190A

SYMBOLS AND CODES EXPLAINED IN INTERPRETER

IN ORDER OF (1) TYPE (2) MAT AND (3) TYPE NO.

LINE No.	3 TYPE NUMBER	1 TYPE	2 MAT.	DWG. NO.	DESCRIPTION
1	SA13PCN/R031(A)	10	Si	DO4	Avalanche Diode VRRM 1.3KV at 2.0mA IRRM VRM 1.48V at 78.5A
2	SA13PCN/R051(A)	10	Si	DO5	Avalanche Diode VRRM 1.3KV at 2.0mA IRRM VFM 1.44V at 132A
3	SA13PCN/R061(A)	10	Si	DO5	Avalanche Diode VRRM 1.3KV at 2.0mA IRRM VFM 1.61V at 190A
4	SA14PCN/R031(A)	10	Si	DO4	Avalanche Diode VRRM 1.4KV at 2.0mA IRRM VFM 1.48V at 78.5A
5	SA14PCN/R051(A)	10	Si	DO5	Avalanche Diode VRRM 1.4KV at 2.0mA IRRM VFM 1.44V at 132A
6	SA14PCN/R061(A)	10	Si	DO5	Avalanche Diode VRRM 1.4KV at 2.0mA IRRM VFM 1.61V at 190A
7	SA15PCN/R031(A)	10	Si	DO4	Avalanche Diode VRRM 1.5KV at 2.0mA IRRM VFM 1.48V at 78.5A
8	SA15PCN/R051(A)	10	Si	DO5	Avalanche Diode VRRM 1.5KV at 2.0mA IRRM VFM 1.44V at 132A
9	SA15PCN/R061(A)	10	Si	DO5	Avalanche Diode VRRM 1.5KV at 2.0mA IRRM VFM 1.61V at 190A
10	SA16PCN/R031(A)	10	Si	DO4	Avalanche Diode VRRM 1.6KV at 2.0mA IRRM VFM 1.48V at 78.5A
11	SA16PCN/R051(A)	10	Si	DO5	Avalanche Diode VRRM 1.6KV at 2.0mA IRRM VFM 1.44V at 132A
12	SA16PCN/R061(A)	10	Si	DO5	Avalanche Diode VRRM 1.6KV at 2.0mA IRRM VFM 1.61V at 190A
13	SCH120	10	Si ♦	u10F	Rectifier Chip; PRV 20; IF 1.0A; IR 1.0mA; VF 0.65
14	SCH130	10	Si ♦	u10F	Rectifier Chip; PRV 30; IF 1.0A; IR 1.0mA; VF 0.65
15	SCH140	10	Si ♦	u10F	Rectifier Chip; PRV 40; IF 1.0A; IR 1.0mA; VF 0.65
16	SCH150	10	Si ♦	u10F	Rectifier Chip; PRV 50; IF 1.0A; IR 1.0mA; VF 0.65
17	SCH160	10	Si ♦	u10F	Rectifier Chip; PRV 60; IF 1.0A; IR 1.0mA; VF 0.65
18	SCH320	10	Si ♦	u10g	Rectifier Chip; PRV 20; IF 3.0A; IR 2.0mA; VF 0.65
19	SCH330	10	Si ♦	u10g	Rectifier Chip; PRV 30; IF 3.0A; IR 2.0mA; VF 0.65
20	SCH340	10	Si ♦	u10g	Rectifier Chip; PRV 40; IF 3.0A; IR 2.0mA; VF 0.65
21	SCH350	10	Si ♦	u10g	Rectifier Chip; PRV 50; IF 3.0A; IR 2.0mA; VF 0.65
22	SCH360	10	Si ♦	u10g	Rectifier Chip; PRV 60; IF 3.0A; IR 2.0mA; VF 0.65
23	SCH520	10	Si ♦	u10h	Rectifier Chip; PRV 20; IF 5.0A; IR 3.0mA; VF 0.65
24	SCH530	10	Si ♦	u10h	Rectifier Chip; PRV 30; IF 5.0A; IR 3.0mA; VF 0.65
25	SCH540	10	Si ♦	u10h	Rectifier Chip;PRV 40;IF 5.0A;IR 3.0mA VF 0.65
26	SCH550	10	Si ♦	u10h	Rectifier Chip;PRV 50;IF 5.0A;IR 3.0mA VF 0.65
27	SCH560	10	Si ♦	u10h	Rectifier Chip;PRV 60;IF 5.0A;IR 3.0mA VF 0.65
28	SCH1020	10	Si ♦	u10j	Rectifier Chip; PRV 20; IF 10A; IR 5.0mA; VF 0.65
29	SCH1030	10	Si ♦	u10j	Rectifier Chip; PRV 30; IF 10A; IR 5.0mA; VF 0.65
30	SCH1040	10	Si ♦	u10j	Rectifier Chip; PRV 40; IF 10A; IR 5.0mA; VF 0.65
31	SCH1050	10	Si ♦	u10j	Rectifier Chip; PRV 50; IF 10A; IR 5.0mA; VF 0.65
32	SCH1060	10	Si ♦	u10j	Rectifier Chip; PRV 60; IF 10A; IR 5.0mA; VF 0.65
33	SD80	10	Si		Noise Limiter;Pd 500mW;IF 400mA Max;IR 10uA at 0.4V;IF 200mA at 1.0V
34	UR710	10	Si	A146f	Low leakage rad. tolerant diode;PIV 100V;500nA leakage;trr 50ns max at If 10mA,Ir 5.0mA.
35	AP2361	10	Si△	DO35	VR 1.35V IT 10mA IR leakage at 10V 10uA
36	AP3897	10	Si△	DO35	VR 1.5V IT 30mA ZT at It 5.0Ohm IR leakage at 10V 10uA
37	AP4156	10	Si△	DO35	VR 1.54-1.84V IT 100mA IR leakage at 20V 10uA
38	AP4157	10	Si△	DO35	VR 2.36-2.66V IT 100mA IR leakage at 20V 10uA
39	AP4829	10	Si△	DO35	VR 1.9V IT 100mA IR leakage at 10V 10uA
40	AP4830	10	Si△	DO35	VR 2.6max IT 100mA IR leakage at 10V 10uA
41	AP5179	10	Si△	DO35	VR 3.0-3.7V IT 100mA IR leakage at 20V 10uA
42	APD200	10	Si△	DO35	VR 1.6-1.76V IT 100mA ZT at IR leakage at 30V 10uA
43	BB101	10	Si$#	DO41	Tuner Diode;VR 20V;Ct 130pF max at VR 4.0V
44	1SS85	10	Si#$	DO35	Band Sw. for VHF-TV;Pd 150nW;VBR -35V at -10uA;Ir -0.1 uA at -25V
45	1SS103	10	Si#$	M1143	Tuning Diode;VR 35V;Io 100mA;VF 1.1V at IF 100mA
46	BAS17	10	Si#$	M500d	VF870-960mVmax at 100mA;IR5.0uA at 4.0V;Temp 150J max
47	BOV150S20K	10	SI	M1107g	Voltage Range 216-264V;Pd 1.0W Max;Supply Volt 130Vac;Cap 1.8nF
48▼	S16B	12	△	M1321Ø	Controlled Avalance Diode;Vr 100V;IF(av) 10A;VF 1.3V at IF 30A

If this is November 1987 or later, consider ordering edition 55 which contains thousands of additional choices for components.

SYMBOLS AND CODES EXPLAINED IN INTERPRETER

Diodes qualified under MIL-S-19500 have a government type number designation as indicated below.

SEMICONDUCTORS MIL-S-19500 GOV'T. TYPE NO. DESIGNATION

JAN	1N	2436	AR
Prefix (as applicable)	Component Designation	Identification Number	Suffix Letter(s)

PREFIX:
The JAN, JANTX, JANTXV, JANTXVM, JANTXVD, JANTXVH, JANS, JANSM, JANSD, JANSR, AND JANSH prefix is assigned based upon the qualification testing performed. A summary chart is provided below.

JAN Prefix Product Assurance Requirements

Requirement	JANS	JANSM JANSD JANSR JANSH	TXV	TXVM TXVD TXVR TXVH	TX	JAN
			(X = Required)			
Qualification:						
a. Product assurance program and survey	X	X	X	X	X	X
b. Manufacturer certification	X	X				
c. Inspection and testing	X	X	X	X	X	X
Inspection lot	X	X	X	X	X	X
Traceability	X	X	X	X	X	X
Inspection during manufacture	X	X				
Screening	X	X	X	X	X	
Quality conformance inspection:						
a. Group A (each lot)	X	X	X	X	X	X
b. Group B (each lot)	X	X	X	X	X	X
c. Group C (every 6 months)	X	X	X	X	X	X
d. Group D (each lot)		X		X		

Devices without a JAN prefix have not been processed in accordance with MIL-S-19500 as shown above, but are electrically equivalent to the corresponding JAN prefixed device.

Continued Next Page

SEMICONDUCTORS MIL-S-19500
GOV'T. TYPE NO. DESIGNATION

Four radiation hardening levels are provided for JANS and JANTXV devices qualified as shown. (See RHA level chart).

Radiation Hardness Assurance (RHA) Level

RHA Level Designation	Total Ionizing Dose (RAD (Si))	Neutron Fluence (n/cm^2)
M	3000	2×10^{12}
D	10^4	2×10^{12}
R	10^5	10^{12}
H	10^6	10^{12}

COMPONENT DESIGNATION:

Semiconductor components are identified by the prefix "XN". An "X" will usually be a number which is one less than the number of active element terminations.

IDENTIFICATION NUMBER:

Each type of semiconductor component intended for standardization will be assigned an identification serially by the Joint Electron Device Engineering Council (J.E.D.E.C.). This assignment provides the component designation, identification number, and any applicable suffix letters.

SUFFIX LETTERS:

The suffixes shown may be used as part of the type number as applicable.

A, B, C, etc (except L, M, R, S) ..... Indicates a modified version which is substitutable for the basic numbered (non-suffix) device.

M ..... Indicates matching of specified parameters of separate devices.

R ..... Indicates reverse polarity packaging of the basic numbered device.

L or S ..... Indicates that the terminal leads are longer or shorter, respectively, than those of the basic numbered device.

For additional information on military qualified devices, please refer to D.A.T.A.'s Military Electronics Devices Guide.
This Guide is published quarterly to correspond to the most recent QPL revisions. The latest edition contains information on more than 20,000 military qualified ICs and semiconductors.
The 3 microcircuit product selection sections, MIL-M-38510, DESC drawings and MIL-STD-883 are sorted by device function and cross indexed for easy access to the device information and standard outline drawings. MIL-S-19500 semiconductors are also sorted, listed, indexed, and reference a series of standard case outline drawings.
All military qualified manufacturers are listed within their respective sections, indicating D.A.T.A. mfr. code, government code, FSCM No., logo, and plant locations.

14. CIRCUIT DRAWINGS

D00-1

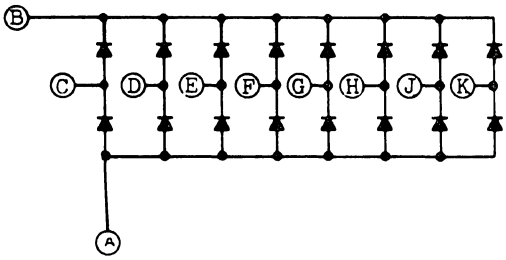

	CKT	A	B	C	D	E	F	G	H	J	K
D00-1	1	1	10	2	3	4	5	6	7	8	9
D00-1a	1	14	1	2	3	5	7	8	9	11	12
D00-1b	1	5	10	1	2	3	4	6	7	8	9
D00-1c	1	5	10	1	4	6	9				
D00-1d	1	5	10	1	4	6					
D00-1e	1	1	3	2	4						
D00-1f	1	1	5	3	7						
D00-1g	1	1	3	2							
D00-1h	1	1	5	3							
D00-1j	1	14	1	2	3	11	12				
D00-1k	1	7	8	4	5	9	10				
D00-1m	1	2	1	3	4	12	13	14			
	2	6	7	5	8	9	10	11			
D00-1n	1	14	1	2	3	11	12				
	2	7	8	4	5	9	10				
D00-1p	1	14	1	2	3	4	5	9	10	11	12
D00-1q	1	1	2	3	4						
	2	8	7	5	6						
	3	9	10	11	12						
	4	16	15	13	14						
D00-1r	1	14	1	2	3	4	5	9	10	11	12

D00-2

NOTE: EMPTY BLOCKS ON CHART INDICATE THE DIODES CONNECTED TO THAT PIN ARE NOT IN THE CIRCUIT.

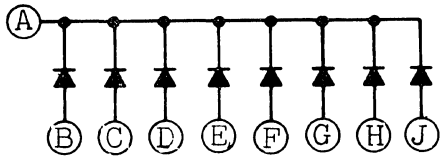

COMMON CATHODE

	A	B	C	D	E	F	G	H	J
D00-2	10	2	3	4	5	6	7	8	9
D00-2a	4	1	2	3	5	6	7	8	9
D00-2b	4	1	2	3	5	6	7	8	
D00-2c	4	1	2	3	5	7	8		
D00-2d	4	1	3	5	7	8			
D00-2e	4	1	3	5	7				
D00-2f	3	1	2	4					
D00-2g	5	1	3	7					
D00-2h	2	1	3						
D00-2j	5	1	3						
D00-2k	14	2	3	5	7	8	9	11	12
D00-2m	1	2	3	4	5	6	7	8	9
D00-2n	4	1	2	3	5	6	7		

D00-3

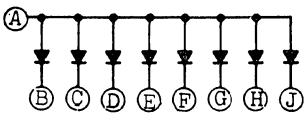

COMMON ANODE

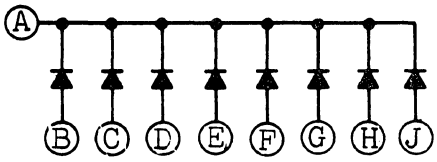

COMMON CATHODE
D00-3a

	A	B	C	D	E	F	G	H	J
D00-3	10	2	3	4	5	6	7	8	9
D00-3a	4	1	2	3	5	6	7	8	9
D00-3b	4	1	2	3	5	6	7	8	
D00-3c	4	1	2	3	5	7	8		
D00-3d	4	1	3	5	7	8			
D00-3e	4	1	3	5	7				
D00-3f	3	1	2	4					
D00-3g	5	1	3	7					
D00-3h	3	1	2						
D00-3j	5	1	3						
D00-3k	14	2	3	5	7	8	9	11	12
D00-3m	1	2	3	4	5	6	7	8	9
D00-3n	4	1	2	3	5	6	7		

D00-4

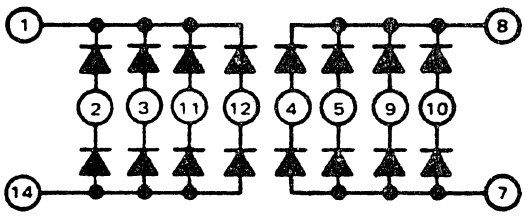

6 13 No internal connection

D00-5

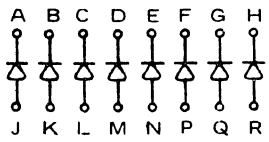

	A	B	C	D	E	F	G	H	J	K	L	M	N	P	Q	R
D005	1	2	3	4	5	6	7		14	13	12	11	10	9	8	
D005a	8	7	6	5	4	3	2	1	9	10	11	12	13	14	15	16
D005b	7	6	5	4	3	2	1		8	9	10	11	12	13	14	

NOTE: Empty Blocks on Chart Indicates Diodes Connected to that Pin are Not in the Circuit

14. CIRCUIT DRAWINGS

D00-7

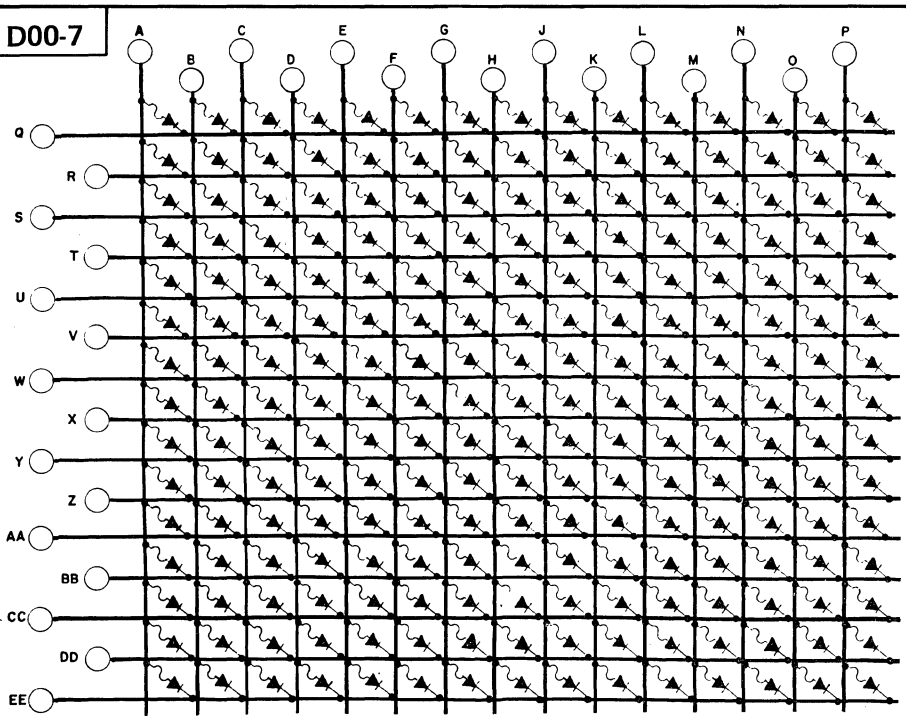

	A	B	C	D	E	F	G	H	J	K	L	M	N	O	P	Q	R	S	T	U	V	W	X	Y	Z	AA	BB	CC	DD	EE
D00-7		31		30		29		28		27	14	26	15	25	16		23		22		21	4	20	5	19	6	18	7	17	8
D00-7a		31		30		29		28		27	14	26	15	25	16		21		20		19	4	18	5	17			NC		
D00-7b		31		30		29	12	28	13	27	14	26	15	25	16		18		17											
D00-7c		29		28		27		26		25							23		22		21	4	20	5	19	6	18	7	17	8
D00-7d	9	29	10	28	11	27		26		25						1	21	2	20	3	19	4	18	5	17			NC		
D00-7e		29		28		27		26		25							18		17											
D00-7f		26		25						NC							23		22		21	4	20	5	19	6	18	7	17	8
D00-7g		26		25													21		20		19	4	18	5	17					
D00-7h	1	7	14	8	13											2	3	4	5	6										
D00-7i	1	7	14	8	13	9	12	10								2	3	11	4	5	6									
D00-7j	1	7	14	8	13	9	12	10								2	3	4	5	6								NC		

D00-8

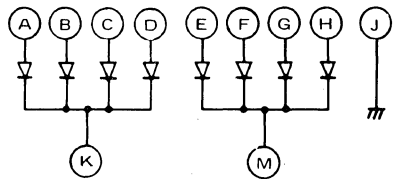

	A	B	C	D	E	F	G	H	J	K	M
D00-8	2	3	4	5	9	10	11	12	13	1	14
D00-8a	2	3	4	5	6	7	8	9		1	10
D00-8b	2	3	5	7	8	9	11	12		1	14

D00-9

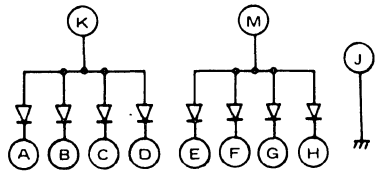

	A	B	C	D	E	F	G	H	J	K	M
D00-9	2	3	4	5	9	10	11	12	13	1	14
D00-9a	2	3	4	5	6	7	8	9		1	10
D00-9b	2	3	5	7	8	9	11	12		1	14
D00-9c	10	9	5	4	12	11	3	2		7	14

D00-10

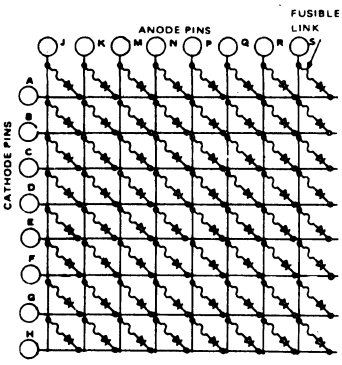

	A	B	C	D	E	F	G	H	J	K	M	N	P	Q	R	S	NO CONNECTION
D00-10	2	3	4	5	6	NA	NA	NA	1	7	14	8	13	NA	NA	NA	9,10,11,12
D00-10a	2	3	11	4	5	6	NA	NA	1	7	14	8	13	9	NA	NA	10,12
D00-10b	2	3	11	4	5	6	NA	NA	1	7	14	8	13	9	12	10	
D00-10c	2	12	3	11	4	10	5	6	1	7	14	8	13	NA	NA	NA	9
D00-10d	2	12	3	11	4	10	5	6	1	7	14	8	13	9	NA	NA	

D00-11

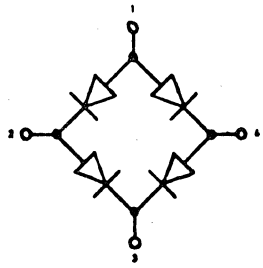

D00-12

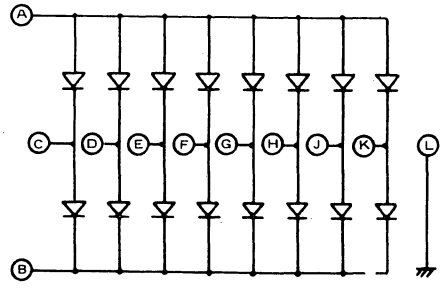

	A	B	C	D	E	F	G	H	J	K	L
D0012	14	1	2	3	5	7	8	9	11	12	13
D0012a	1	14	2	3	5	7	8	9	11	12	13

D00-14

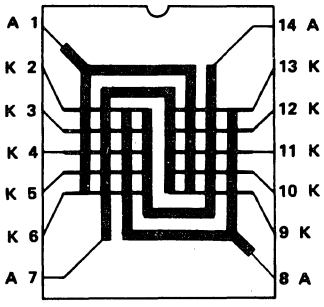

D00-15

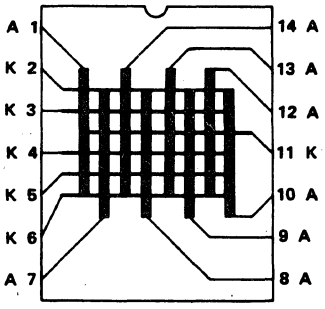

14. CIRCUIT DRAWINGS

D00-16

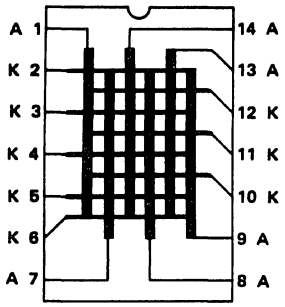

D00-17

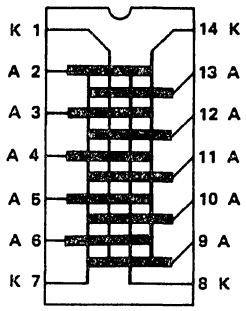

D00-18

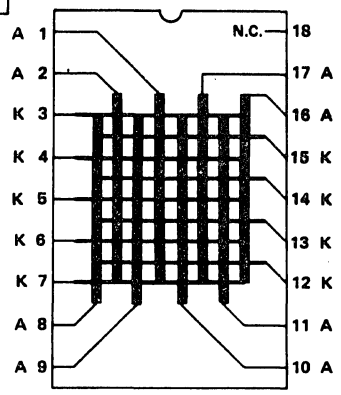

D00-19

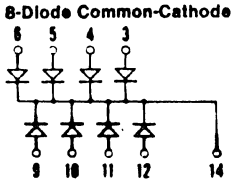

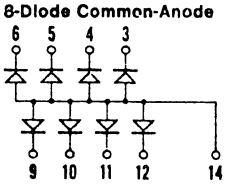

D00-19a

D00-21

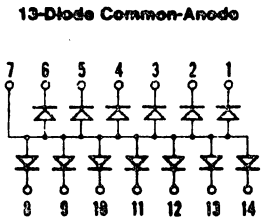

D00-21a

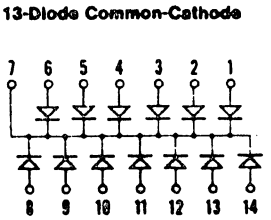

D00-23

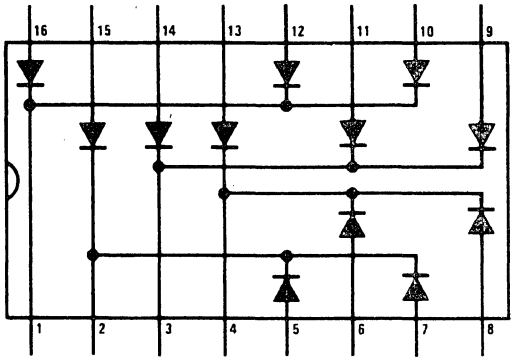

D00-24

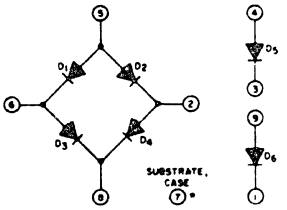

D00-25

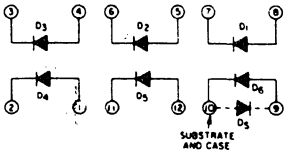

D00-26

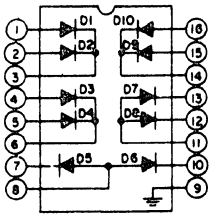

14. CIRCUIT DRAWINGS

D00-27

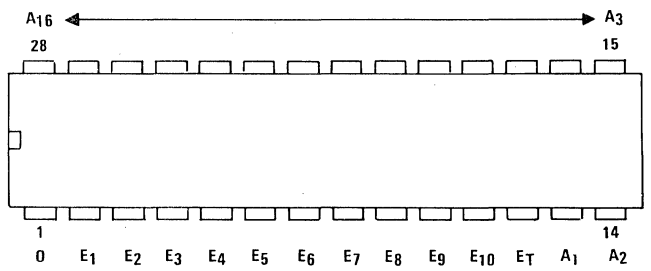

D00-28

Circuit

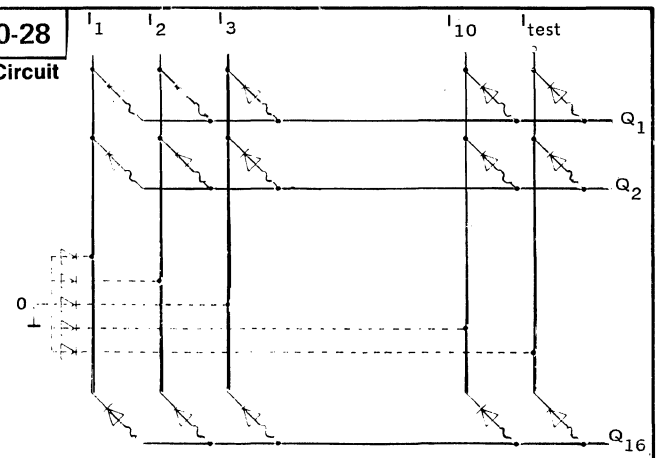

D00-30

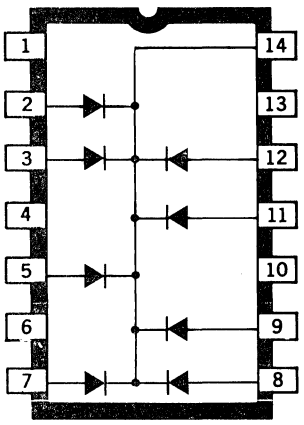

D00-31

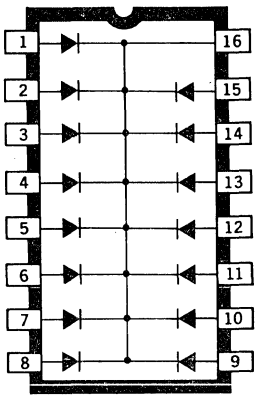

D00-32

Dual Schottky Diode Bridge

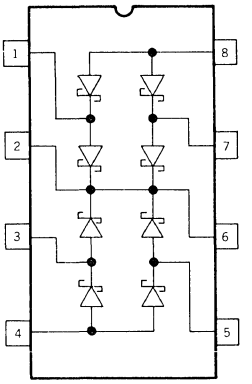

D0034

SCHOTTKY BARRIER DIODE
(14 per chip)

SCHOTTKY BARRIER DIODE
FULL WAVE RECTIFIER
(1 per chip)

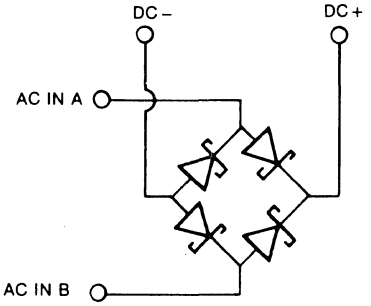

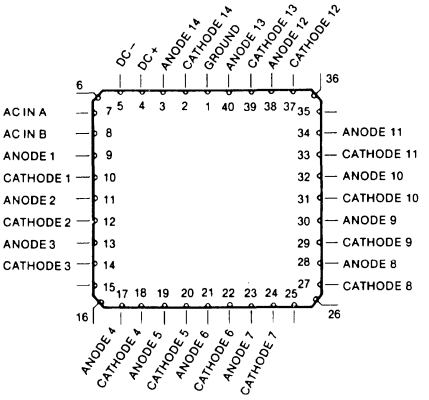

D0035

SCHOTTKY BARRIER DIODE
(14 per chip)

SCHOTTKY BARRIER DIODE
FULL WAVE RECTIFIER
(1 per chip)

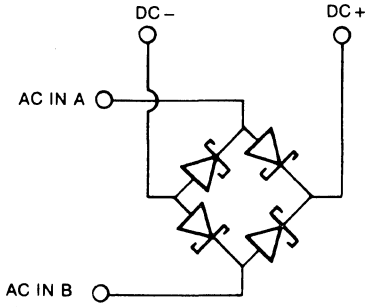

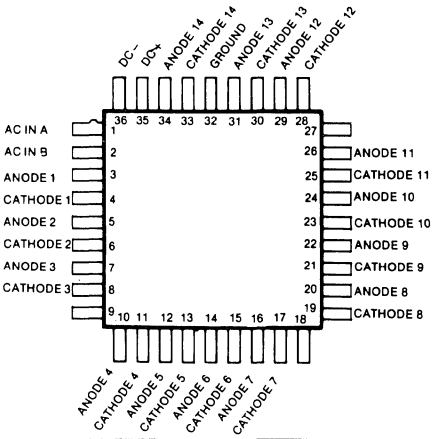

15. OUTLINE DRAWINGS

THE PREFIX LETTERS OF THE OUTLINE DRAWING NUMBERS INDICATE THE FOLLOWING:

A — AXIAL LEAD Type
C — CASE Type
DO— JEDEC Type
E200/DO2 — JEDEC '200' Family and Military Outlines. (See explanation under NOTES)
F — FUSE Type
L — MULTIPLE LEAD Type
M — MISCELLANEOUS Type
P — PLUG-IN Type
S — SCREW BASE Type
TO— JEDEC Type
u — MICROMINIATURE (CHIP) TYPE
V — MULTIPLE VARIATION Types
Y200/TO200 — JEDEC '200' Family and Military Outlines. (See explanation under NOTES)
Z — DRAWING REFERENCE INFORMATION

These outline drawings are intended as a guide for the user. They should not be used for construction purposes without first checking with the appropriate manufacturer.

These drawings are referenced in the Technical Sections of this D.A.T.A.BOOK in accordance with information supplied by the manufacturers.

The DO and TO drawings have been reproduced from JEDEC Registration Data Files with the permission of the National Electrical Manufacturer's Association — Electronic Industries Association. JEDEC designations are assigned only to outlines submitted by the JC-11 Committee on Mechanical Standardization. The procedure of assigning and announcing the JEDEC designation constitutes registration.

The DO200 and TO200 Series (DO200, TO200 and higher) are JEDEC-registered outlines, and are referenced in the technical sections with the prefices DO and TO replaced by E and Y, respectively. Suffices such as AA, AB or MA, MB following the DO and TO Series number indicate dimensional variations of the basic outline. For commercial outlines, the suffices start with AA replaced by a; for military outlines, the suffices start with MA replaced by a. JEDEC type numbers which have letter S suffices indicate a device that is manufactured with leads shorter than specified in the registered data of the device, but not shorter than 12.7 mm (.5 inch). The suffix letter S need not be marked on individual devices.

All dimensions are in inches except where noted.

A1

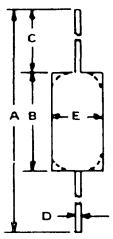

MAY SHOW COLOR BANDS TO DENOTE POLARITY.

	A	B	C	D	E	CHAMFERED EDGES
A1		.300 MAX	1.00 MIN	.018 / .022	.125 / .150	NO
A1a			1.57 MIN	.020 MAX	.312	NO
A1b		.031	1.50 MIN	.250	1.25	NO
A1c		.068 MAX	.450 MIN	.008 / .012	.042 MAX	YES
A1d		.100 MAX	.500 MIN	.016	.100 MAX	OPTIONAL
A1e		.100	1.25 MIN	.020	.060	OPTIONAL
A1f		.185 / .200	1.00	.040	.100 / .128	NO
A1h		.110	1.00 MIN	.022	.065	NO
A1j		.120	1.00 MIN	.022 MAX	.065 MAX	YES
A1k		.125	1.00 MIN	.020	.060	OPTIONAL
A1m		.150	.400	.010	.060	NO
A1n		.150 / .170	1.08 MIN	.022	.106	YES
A1p		.155 MAX	.750 MIN	.020	.085 MAX	NO
A1q		.155 MAX	.750 MIN	.036	.085 MAX	NO
A1r		.155 MAX	.750 MIN	.036	.095 MAX	NO
A1s		.157 MAX	.196 MIN	.020 MAX	.047 MAX	NO
A1v		.125 / .160	.800 / 1.30	.028 / .032	.060 / .085	YES
A1w		.160	1.00	.032	.085	NO
A1x		.160 MAX	1.00 MIN	.036	.085 MAX	NO
A1y		.160 MAX	1.125 MIN	.020	.080 MAX	YES
A1z		.160	1.13 MIN	.020	.062	NO
A1aa		.162 MAX	1.00 MIN	.022	.075 MAX	YES
A1ac		.165 MAX	1.00 MIN	.015	.075 MAX	YES
A1ad		.165	1.00 / 1.50	.016	.075	YES
A1ae		.169 MAX	1.00 MIN	.022	.075 MAX	YES
A1ag		.170 MAX	1.00 MIN	.014 / .016	.070 MAX	YES
A1ah		.170 MAX	1.00 MIN	.016 MAX	.076 MAX	YES
A1ak		.175 MAX	1.00 MIN	.015	.075 MAX	NO

	A	B	C	D	E	CHAMFERED EDGES
A1am		.175 MAX	1.00	.016	.075	NO
A1an		.177 MAX	1.00 MIN	.022	.075 MAX	YES
A1ap		.180 MAX	1.00 MIN	.022 MAX	.075 MAX	YES
A1aq		.180 MAX	1.00 MIN	.022 MAX	.080 MAX	NO
A1ar		.180 MAX	1.00 MIN	.016	.078 MAX	YES
A1as		.185 MAX	.750 MIN	.018	.085 MAX	NO
A1at		.185 MAX	1.00 MIN	.020	.075 MAX	NO
A1au		.190 MAX	1.00 MIN	.015	.073 MAX	YES
A1av		.190 MAX	1.00 MIN	.022 MAX	.080 MAX	NO
A1ay		.205 MAX	1.10 MIN	.030 / .034	.100 / .107	YES
A1az		.205 MAX	1.10 MIN	.030 / .034	.100 / .128	YES
A1ba		.205 MAX	1.10 MIN	.034	.107 MAX	YES
A1bc		.225	1.25 MIN	.032	.120	NO
A1bg		.240 / .250	1.25 MIN	.032	.120 MAX	NO
A1bh		.250	1.00 MIN	.020	.106	OPTIONAL
A1bj		.250	1.00 MIN	.020	.125	OPTIONAL
A1bk		.250 MAX	1.00 MIN	.028	.095 MAX	YES
A1bn		.250	1.00 MIN	.040	.110	OPTIONAL
A1bp		.250 / .400	1.00 MIN	.026 / .030	.106 / .120	NO
A1bs		.250	1.25 MIN	.031	.135	OPTIONAL
A1bu		.255 MAX	1.00 MIN	.031	.140 MAX	YES
A1bv		.256 MAX	.985 MIN	.032 MAX	.138 MAX	YES
A1bw		.260	1.00 MIN	.020	.118	YES
A1bx		.265 MAX	1.00		.120	NO
A1by		.265 MAX	1.00 MIN	.020	.095 MAX	YES
A1bz		.265 MAX	1.00	.020	.105	NO
A1cb		.270 MAX	1.10 MIN	.020	.098 MAX	YES

Continued on next page

A1 Cont'd

	A	B	C	D	E	CHAMFERED EDGES
A1ce		.275 MAX	1.00 MIN	.020	.105 MAX	YES
A1cf		.275 MAX	1.00 MIN	.032 MAX	.145 MAX	YES
A1cg		.275	1.13 MIN	.033	.145	OPTIONAL
A1ch		.275	1.19 MIN	.031	.135	OPTIONAL
A1cj		.275 MAX	1.25	.020	.105 MAX	YES
A1ck		.281	1.00 MIN	.030	.110	OPTIONAL
A1cm		.281	1.00 MIN	.040	.110	OPTIONAL
A1cn		.281	1.25 MIN	.030	.110	OPTIONAL
A1cp		.283 MAX	.984 MIN	.020	.125 MAX	YES
A1cq		.283 MAX	1.02 MIN	.020	.122 MAX	YES
A1cs		.285 MAX	1.125	.020	.125	NO
A1ct		.287 MAX	1.18 MAX	.015	.102	YES
A1cu		.299	1.10 MIN	.019	.106	OPTIONAL
A1cv		.200	1.00	.017	.080	NO
A1cw		.300 MAX	1.00 MIN	.019 / .021	.125 MAX	YES
A1cy		.300 MAX	1.00 MIN	.020	.104 MAX	YES
A1cz		.300 MAX	1.00 MIN	.020	.140 MAX	YES
A1da		.300 MAX	1.00	.021	.105	NO
A1db		.300 MAX	1.00 MIN	.022 MAX	.107 MAX	YES
A1dd		.230 / .300	1.00 / 1.50	.018 / .022	.092 / .130	NO
A1de		.300 MAX	1.00	.030	.110	NO
A1df		.300	1.00 MIN	.035	.150	NO
A1dg		.300 MAX	1.00 MIN	.042 MAX	.155 MAX	YES
A1dh		.300 MAX	1.125	.030	.090	NO
A1dk		.300 MAX	1.50 MAX	.032	.137 / .140	NO
A1dm		.303 / .323	1.00 MIN	.030	.165 / .185	NO
A1dr		.315 MAX	1.14 MIN	.020 MAX	.110 MAX	YES
A1ds		.320	1.13 MIN	.030	.140	OPTIONAL
A1du		.325	1.00 MIN	.020	.220	NO
A1dw		.334	1.00 MIN	.020	.118	YES
A1dy		.335 MAX	1.00 MIN	.027 / .034	.150 / .185	YES
A1ea		.338 MAX	.984	.031	.149 MAX	YES
A1ec		.340	1.18 MIN	.036	.135	OPTIONAL
A1ee		.350 MAX	1.00 MIN	.043 MAX	.145 MAX	NO
A1ef		.350 MAX	1.00 MIN	.031	.140 MAX	YES

	A	B	C	D	E	CHAMFERED EDGES
A1eg		.350	1.00 MIN	.048 / .052	.350	
A1eh		.350	1.13 MIN	.030	.140	OPTIONAL
A1ej		.350	1.20	.032	.200	NO
A1ek		.350	1.25 MIN	.020	.210	NO
A1ep		.375	.750 MIN	.032	.270	NO
A1eq		.375	.800	.050	.300	NO
A1er		.375	1.00	.020	.234	NO
A1es		.375	1.00 MIN	.032	.220	OPTIONAL
A1eu		.375	1.00 MIN	.050	.300	NO
A1ev		.375	1.25 MIN	.032	.125	NO
A1ew		.375	1.25 MIN	.032	.200	NO
A1ex		.375	1.25	.032	.250	NO
A1ey		.375	1.25 MIN	.051	.200	NO
A1ez		.375	1.25 MIN	.051	.220	NO
A1fd		.400 MAX	1.00 MIN	.022 MAX	.115 MAX	NO
A1fe		.400 MAX	1.25 MIN	.020	.125 MAX	
A1ff		.400 MAX	1.50 MIN	.035 MAX	.240 MAX	YES
A1fg		.410	1.13 MIN	.031	.135	OPTIONAL
A1fh		.410 MAX	1.14 MIN	.022 MAX	.140 MAX	YES
A1fj		.415		.033	.145	OPTIONAL
A1fk		.415 MAX	1.11 MIN	.033 MAX	.145 MAX	YES
A1fm		.425 MAX	.450 MIN	.021	.110 MAX	NO
A1fn		.433 MAX	.709 MIN	.059 MAX	.284 MAX	YES
A1fq		.438	1.00 / 1.126	.025	.200	YES
A1ft		.470 MAX	1.30 MIN	.028	.236 MAX	YES
A1fu		.496 / .516	2.25 / 2.75	.030	.333 / .363	NO
A1fv		.500	.750 MIN	.028	.187	NO
A1fz		.500	1.00 MIN	.200	.325	NO
A1ga		.500	1.25 MIN		.375	NO
A1gb		.500	1.25 MIN	.020	.313	NO
A1gc		.500	1.25 MIN	.030	.313	NO
A1gd		.500	1.25 MIN	.030	.380	NO
A1gf		.500	1.25	.032	.375	NO
A1gj		.500	1.75 MIN	.028	.197	OPTIONAL
A1gk		.510	1.125 MIN	.020	.097	NO
A1gm		.520 MAX	1.00 MIN	.022 MAX	.265 MAX	YES
A1gn		.520 MAX	1.00 MIN	.040	.260 MAX	YES
A1gp		.520 MAX	1.125 MIN	.022 MAX	.275 MAX	YES

Continued on next page

A1 Cont'd

	A	B	C	D	E	CHAMFERED EDGES
A1gq		.530 MAX	1.25 MIN	.040 MAX	.405 MAX	YES
A1gr		.560	1.00 MIN	.020	.125	NO
A1gs		.560	1.00 MIN	.032	.276	NO
A1gt		.622 / .628	1.125 / 1.375	.030 / .034	.615 / .635	NO
A1gx		.625	1.25 MIN	.032	.375	NO
A1gz		.656	1.50 MIN	.032	.406	OPTIONAL
A1ha		.688 MAX	1.00 MIN		.313 MAX	NO
A1hc		.700 MAX	1.00 MIN	.020 MAX	.150 MAX	NO
A1hd		.703	1.00 MIN	.035	.328	NO
A1hg		.750		.032	.375	NO
A1hh		.750	.787 MIN	.020	.295	NO
A1hk		.750	1.25 MIN	.020	.313	NO
A1hm		.750	1.25 MIN	.030	.500	NO
A1hq		.869 / .916	2.25 / 2.75	.030	.333 / .360	NO
A1hs		.885 MAX	.984 MAX	.031	.196 MAX	YES
A1ht		.900 MAX	1.00 MIN	.032 MAX	.260 MAX	NO
A1hu		.940 / 1.41	2.25 / 3.75	.030	.333 / .363	NO
A1hv		.969 / 1.016	2.25 / 2.75	.030 / .030	.333 / .363	NO
A1hw		.985	1.57 MIN		.312	NO
A1hx		1.00 MAX	.750 MIN	.020 MAX	.250 MAX	YES
A1hy		1.00	1.00 MIN		.500 MAX	NO
A1ja		1.00	1.00	.032	.375	NO
A1jc		1.00	1.25 MIN		.375	NO
A1jd		1.00	1.25 MIN		.500	NO
A1je		1.00	1.25 MIN	.020	.313	NO
A1jf		1.00	1.25 MIN	.030	.313	NO
A1jg		1.00	1.25 MIN	.030	.380	NO
A1jh		1.00	1.25 MIN	.030	.500	NO
A1jj		1.00	1.25	.032	.375	NO
A1jk		1.00	1.25 MIN	.034	.312	NO
A1jm		1.00	1.25 MIN	.040	.375	NO
A1jq		1.00	1.50	.032	.375	NO
A1jr		.175	1.10	.032	.090	NO
A1js		1.03 MAX	.787 MAX	.043	.267	NO
A1jt		1.03 MAX	1.25 MIN	.040 MAX	.405 MAX	YES
A1ju		1.03 MAX	1.25 MIN	.040 MAX	.530 MAX	YES
A1jv		1.12		.032	.375	NO
A1jw		.232 / .240	1.02	.031	.129 / .140	NO

	A	B	C	D	E	CHAMFERED EDGES
A1jz		1.13	1.00 MIN		.500 MAX	NO
A1kb		1.16 / 1.22	1.625 / 1.875	.030 / .034	.615 / .635	NO
A1kd		1.20	1.00 MIN	.020	.325	NO
A1ke		1.25	1.00 MIN		.500 MAX	NO
A1kh		1.25	1.25	.032	.375	NO
A1kk		.185 / .205	1.00	.032	.100 / .128	NO
A1kn		1.30	1.25 MIN	.030	.375	NO
A1kp		1.38	1.00 MIN		.500 MAX	NO
A1kr		1.43	1.18 MIN	.032	.366	NO
A1ks		1.50	1.00 MIN		.500 MAX	NO
A1kt		1.50	1.00 MIN	.032	.500	NO
A1ku		1.50	1.25 MIN		.500	NO
A1kv		1.50	1.25 MIN	.030	.500	NO
A1kw		1.50	1.25	.032	.375	NO
A1kz		1.62		.032	.375	NO
A1ma		1.625	1.00	.032	.375	NO
A1mb		1.625	1.25		.375	NO
A1mc		1.625	1.25	.032	.375	NO
A1md		1.63	1.00 MIN		.500 MAX	NO
A1me		1.70 MAX	1.00 MIN	.030	.235 MAX	
A1mf		1.75	1.00 MIN		.500 MAX	NO
A1mj		1.75	1.25	.032	.375	NO
A1mk		1.75	1.50 MIN	.030	.500	NO
A1mp		1.88	1.00 MIN		.500 MAX	NO
A1ms		2.00	1.00 MIN		.500 MAX	NO
A1mu		2.00	1.25 MIN	.030	.500	NO
A1mv		2.00	1.25	.032	.375	NO
A1my		2.00	2.00 MIN	.018	.500	NO
A1na		2.12		.032	.375	NO
A1nb		2.125	1.00	.032	.375	NO
A1nc		2.125	1.25	.032	.375	NO
A1nd		2.13	1.00 MIN		.500 MIN	NO
A1ne		.590 MAX	1.50	.020	.105 MAX	YES
A1nf		2.19 / 2.66	2.25 / 2.75	.030	.333 / .363	NO
A1nh		2.25	1.00 MIN		.500 MAX	NO
A1nj		.720 / .780	1.00 MIN	.030	.240 / .260	NO
A1nm		2.25	1.25	.032	.375	NO
A1nn		2.25	1.50 MIN	.030	.500	NO
A1nq		2.38	1.00 MIN		.500 MAX	NO
A1ns		2.46	2.25 MIN	.030	.348	NO
A1nt		2.50		.030	.250	NO

Continued on next page

A1 Cont'd

	A	B	C	D	E	CHAMFERED EDGES
A1nu		2.50	1.00 MIN		.500 MAX	NO
A1nw		2.50	1.25	.032	.375	NO
A1ny		2.62		.032	.375	NO
A1nz		2.625	1.00	.032	.375	NO
A1pa		2.625	1.25	.032	.375	NO
A1pb		2.63	1.00 MIN		.500 MAX	NO
A1pg		2.75	1.00 MIN		.500 MAX	NO
A1ph		2.75	1.25	.032	.375	NO
A1pj		2.75	1.50 MIN	.030	.500	NO
A1pm		2.88	1.00 MIN		.500 MAX	NO
A1pn		3.00	1.00 MIN		.500 MAX	NO
A1pq		3.00	1.25	.032	.375	NO
A1pr		3.12		.032	.375	NO
A1ps		3.125	1.00	.032	.375	NO
A1pt		3.125	1.25	.032	.375	NO
A1pu		3.13	1.00 MIN		.500 MAX	NO
A1pw		3.25	1.00 MIN		.500 MAX	NO
A1px		3.25	1.25	.032	.375	NO
A1qa		3.38	1.00 MIN		.500 MAX	No
A1qb		3.50	1.00 MIN		.500 MAX	NO
A1qc		3.50	1.25	.032	3.75	NO
A1qd		3.62		.032	.375	NO
A1qe		3.625	1.00	.032	.375	NO
A1qf		4.27 MAX	.750	.020	.250 MAX	YES
A1qg		3.63	1.00 MIN		.500 MAX	NO
A1qh		3.75	1.00 MIN		.500 MAX	NO
A1qj		3.75	1.25	.032	.375	NO
A1qk		3.85	1.50 MIN	.030	.500	NO
A1qn		3.88	1.00 MIN		.500 MAX	NO
A1qq		4.00	1.00 MIN		.500 MAX	NO
A1qr		4.00	1.25 MIN	.030	.520	NO
A1qs		4.12		.032	.375	NO
A1qt		4.125	1.00	.032	.375	NO
A1qu		4.125	1.25		.375	NO
A1qv		4.125	1.25	.032	.375	NO
A1qw		4.13	1.00 MIN		.500 MAX	NO
A1qx		4.25	1.00 MIN		.500 MAX	NO
A1qy		3.00	.375	.375	1.00	NO
A1qz		4.38	1.00 MIN		.500 MAX	NO
A1ra		4.50	1.00 MIN		.500 MAX	NO
A1rc		4.62		.032	.375	NO
A1rd		4.625	1.00	.032	.375	NO
A1re	4.72	3.22 MAX	.750	.030	.250 MAX	YES
A1rg		5.00	1.25 MIN	.030	.520	NO
A1rh		5.12		.032	.375	NO
A1rj		5.125	1.00	.032	.375	NO
A1rm		5.125	1.25	.032	.375	NO

	A	B	C	D	E	CHAMFERED EDGES
A1rn		5.13	1.00 MIN		.500 MAX	NO
A1rp		5.20	1.18 MIN	.032	.366	NO
A1rq		6.00	1.25 MIN	.030	.520	NO
A1rr		7.00	1.25 MIN	.030	.520	NO
A1rs		8.00	1.25 MIN	.030	.520	NO
A1rt	1.50	.205	.600	.034	.110	NO
A1rv	2.00	.380	.800	.040	.200	NO
A1rw	2.00	.422	.800	.050	.375	NO
A1rx	2.25	.250	1.0	.030	.115	NO
A1sa	2.62	1.12 MAX	.750 MIN	.020	.250 MAX	YES
A1sc	2.72 MIN	.394 MAX	1.26 MIN	.020	.126	OPTIONAL
A1sd	2.75	.235	1.26	.031	.125	NO
A1sf	2.95	2.75	.098	.098	.590	NO
A1sg	3.15	1.65 MAX	.750 MIN	.020	.250	YES
A1sh	3.25	.300	1.50	.020	.110	NO
A1sk	3.30	.300	1.50	.020	.130	NO
A1sm	3.38	.380	1.50	.051	.210 MAX	NO
A1sp	3.67	2.17 MAX	.750	.020	.250 MAX	YES
A1sq	4.13	.500	1.77	.028	.197	YES
A1sr	4.25	2.25 MAX	1.00 MIN	.032	.250 MAX	YES
A1ss		.480 .520	1.00 MIN	.030	.240 .260	NO
A1st	2.30	.300 MAX	1.00 MIN	.019 .021	.092 .104	YES
A1su	2.502	.102 MAX	1.20 MIN	.019	.102	YES
A1sy	.220	.159 MAX	1.02	.019	.062 MAX	NO
A1ta		.984 MAX	.787	.109	.125 MAX	YES
A1tb		.100 .170	.975 MAX	.014 .021	.045 .076	YES
A1tc		.140 .250	1.00 1.50	.027 .033	.065 .150	NO
A1td		.875 1.12	2.00 MIN	.030 .034	.219 .281	NO
A1te		1.87 2.12	2.00 MIN	.030 .034	.219 .281	NO
A1tf		2.87 3.12	2.00 MIN	.030 .034	.219 .281	NO
A1tg		.150 .175	1.00 MIN	.014 .016	.065 .075	NO
A1th		.150 .170	1.00 MIN	.014 .016	.068 .076	NO
A1tj		.250 .290	1.00 1.60	.018 .022	.090 .110	YES
A1tm	2.44	.255	1.09	.019	.102	YES
A1tn	2.65 2.72	.275	1.21	.012	.102	YES
A1tp		.380	1.50 MAX	.032	.190 .210	NO
A1ts		.330 .350	1.00 MIN	.040	.130 .145	NO
A1tt		.970 1.03	1.25 1.37	.025 .040	.345 .405	YES
A1tu		.970 1.03	1.25 1.37	.025 .040	.345 .530	YES
A1tv		.800 1.00	1.00 1.50	.025 .040	.425 .500	YES

Continued on next page

A1 Cont'd

	A	B	C	D	E	CHAMFERED EDGES
A1tw		1.80 2.00	1.00 1.50	.025 .040	.425 .500	YES
A1tx		2.00 2.50	1.00 1.50	.025 .040	.425 .500	YES
A1ty		.230 MAX	1.00 MIN	.032	.125 MAX	NO
A1tz		.130 .300	.900 1.30	.037 .042	.115 .180	NO
A1ua		.150 .170	1.00 1.50	.014 .020	.068 .076	YES
A1ub		.195 .300	1.00 1.62	.018 .022	.078 .107	NO
A1uc	.270 .310	.150 .170	.060 .070	.035 .037	.068 .076	YES
A1ug		1.00	1.50 MIN	.034 MAX	.250	
A1uh		2.00	1.50 MIN	.034 MAX	.295	
A1uj		3.00	1.50 MIN	.034 MAX	.295	
A1un		.120 .200	1.00 1.50	.018 .022	.060 .090	YES
A1up		.085 .120	1.00 1.62	.018 .022	.050 .075	YES
A1uu		.100 .170	.975 1.50	.014 .016	.045 .076	YES
A1uv	2.65	.251		.031	.122	NO
A1ux	2.50	.500	1.00 MIN	.020	.100 MAX	YES
A1uy	2.75	.750	1.00 MIN	.020	.100 MAX	YES
A1uz	3.50	1.00	1.25	.030	.250	YES
A1va	4.50	2.00	1.25	.030	.375	YES
A1vb	6.50	4.00	1.25	.030	.375	YES
A1vd	2.18	.185 MAX	1.00 MIN	.014 .016	.070 MAX	YES
A1vf		.190 .215	1.00 MIN	.025 .035	.065 .110	YES
A1vg		1.90 2.20	1.25 1.50	.040 .055	.490 .630	NO
A1vh		2.74 3.10	1.25 1.50	.040 .055	.490 .630	NO
A1vj		3.74 4.20	1.25 1.50	.040 .055	.490 .630	NO
A1vk	2.25 MIN	.350 MAX		.048 .052	.205 MAX	NO
A1vm	1.860	.360 .370	.750 MIN	.043 .051	.285 .315	
A1vn	2.50 MIN	.185 .205		.030 .034	.110 MAX	NO
A1vp	2.25 MIN	.310 MAX		.050	.170 MAX	NO
A1vq	1.45	.610	.394	.022 MAX	.165 MAX	NO
A1vs		.118	.236	.023	.078	NO
A1vv		1.60	2.00 MIN	#20	.563 .593	YES
A1wj		.400	.300 MIN	.016	.100	NO
A1wk		.080 .120	1.00 1.50	.018 .022	.050 .075	YES
A1wm		.984 MAX	1.02 MIN	.024	.314 MAX	
A1wn		1.25 MAX	1.02 MIN	.024	.314 MAX	
A1wp		2.40 MAX	1.02 MIN	.024	.314 MAX	
A1wq		3.66 MAX	1.02 MIN	.024	.314 MAX	

	A	B	C	D	E	CHAMFERED EDGES
A1ws		.230 .300	1.00 1.50	.018 .022	.092 .130	NO
A1wt	2.44 2.63	.299 MAX		.020	.098	YES
A1wu	2.49 2.52	.370 .380	1.06 1.07	.048 .052	.160 .210	NO
A1wv		.140 .300	1.00 1.50	.018 .023	.055 .130	YES
A1ww		.125 .250	.700 1.10	.026 .030	.065 .085	YES
A1wx		.130 .300	.900 1.30	.037 .042	.115 .165	YES
A1wy		.629	1.18	.031	.196	YES
A1xa		.360 .380	1.10 MIN	.038 .042	.190 .205	NO
A1xb		.629 MAX	.984 MIN	.027 .035	.216 MAX	NO
A1xd		.250 MAX	.750 MAX	.015	.105 MAX	
A1xe		.625 MAX	.700 MIN	.015	.200 MAX	
A1xf		.970 1.03	1.00 MIN	.030	.260 MAX	
A1xg	2.00 MIN	.375 MAX		.048 .052	.200	NO
A1xh	2.62 2.74	.240 MAX		.029 .033	.128 MAX	NO
A1xj		.395 .405	1.10 MIN	.019 .021	.118 .122	NO
A1xk		1.37	.500 MIN	.029 .033	.250	YES
A1xm		1.75	.500 MIN	.029 .033	.250	YES
A1xn		2.25	.500 MIN	.029 .033	.250	YES
A1xp		3.25	.500 MIN	.029 .033	.250	YES
A1xq		4.25	.500 MIN	.029 .033	.250	YES
A1xr	1.325 MIN	.125 .205	.600 MIN	.025 .036	.050 .110	NO
A1xs	2.180 MIN	.180 .220	1,000 MIN	.018 .022	.085 MAX	NO
A1xt	1.633 MIN	.453 MAX	.590 MIN	.022 MAX	.138 MIN	NO
A1xu		.600	.500 MIN	.019	.125	
A1xv		.130	.500 MIN	.014	.060	
A1xw		.750	1.00 MIN	.031	.250	
A1xx		1.50	1.00 MIN	.031	.250	
A1xy		2.50	1.00 MIN	.031	.250	
A1xz		2.00		.031	.375	
A1ya		2.50		.031	.375	
A1yb		3.50		.031	.375	
A1yc		.380	1.00 MIN	.031	.200	
A1yd		.400	1.00 MIN	.020	.125	
A1ye		.400	1.00 MIN	.031	.125	
A1yf		.500	2.00 MIN	.031	.500	
A1yg		1.00	2.00 MIN	.031	.500	

Continued on next page

A1 Cont'd

	A	B	C	D	E	CHAMFERED EDGES
A1yh		1.50	2.00 MIN	.031	.500	
A1yi		2.00	2.00 MIN	.031	.500	
A1yj		2.50	2.00 MIN	.031	.500	
A1yk		3.00	2.00 MIN	.031	.500	
A1yl		1.00	1.00	.031	.625	
A1ym		1.50	1.00	.031	.625	
A1yn		2.00	1.00	.031	.625	
A1yp		3.00	1.00	.031	.625	
A1yq		4.00	1.00	.031	.625	
A1yr		5.00	1.00	.031	.625	
A1ys		6.00	1.00	.031	.625	
A1yt		7.00	1.00	.031	.625	
A1yu	5.00	.500	2.50	.030	.380	NO
A1yv		3.50		.032	.250	
A1yx	6.00	1.00	2.50	.030	.380	NO
A1yy	6.50	1.50	2.50	.030	.380	NO
A1yz	7.00	2.00	2.50	.030	.380	NO
A1za	7.50	2.50	2.50	.030	.380	NO
A1zb	8.00	3.00	2.50	.030	.380	NO
A1zc	9.00	4.00	2.50	.030	.380	NO
A1zd	10.00	5.00	2.50	.030	.380	NO
A1ze	11.00	6.00	2.50	.030	.380	NO
A1zg		.620 MAX	2.50		.380 MAX	NO
A1zh			2.50		.500 MAX	NO
A1zj			2.50		1.060 MAX	NO
A1zk			2.50		1.380 MAX	NO
A1zm		.754 MAX	2.50		.640 MAX	NO
A1zn		.990 MAX	2.50		.380 MAX	NO
A1zp		.990 MAX	2.50		.500 MAX	NO
A1zq		.990 MAX	2.50		.640 MAX	NO
A1zr		.990 MAX	2.50		1.060 MAX	NO
A1zs		.990 MAX	2.50		1.380 MAX	NO
A1zu		1.485 / 1.515	.600 MIN	.019 / .021	.230 / .240	
A1zv		.395 / .405	.700 / .760	.019 / .021	.123 / .127	
A1zw	2.00 / 2.50	.135 / .165	1.000 / 1.250	.017 / .023	.050 / .070	YES
A1zx	2.00 / 2.50	.200 / .240	1.000 / 1.250	.027 / .033	.085 / .105	YES
A1zy	2.00 / 3.00	.178 / .198	1.000 / 1.500	.014 / .016	.068 / .075	YES
A1zz	2.75	.380	1.137 / 1.237	.048 / .052	.200	NO
A1aaa		.290	1.00	.025	.160	NO
A1aab		.320 MAX	1.125	.028	.160 MAX	YES
A1aac		.875 / 1.125	1.5 MIN	.030 / .034	.245 / .255	NO
A1aad		1.875 / *.125	1.5 MIN	.034 / .034	.290 / .300	NO
A1aae		2.975 / 3.125	1.5 MIN	.030 / .034	.290 / .300	NO
A1aaf		2.12 MAX	2.36 MIN	.031	.354	
A1aag		2.63 MAX	2.36 MIN	.031	.354	

Suffix	A	B	C	D	E	Chamfered Edges
A1aah		.85 MAX	1.25 MIN	.032	.187	
A1aai		1.125 MAX	1.25 MIN	.032	.187 MAX	
A1aaj		.354 MAX	.787 MIN	.057 MAX	.314 MAX	NO
A1aak		.150	1.0	.050	.150	NO
A1aal		.60	.60	.020	.16	NO
A1aam		.60	.80	.020	.16	NO
A1aan		.295	.944	.65	.157	
A1aao	2.50	.300	1.10	.035	.140	NO
A1aap	2.57	.370	1.10	.040	.198	NO
A1aaq	1.20	.335	.430	.039	.325	NO
A1aar	2.02 / 2.22	.181 / .212	.919 / 1.00	.015	.067 / .069	NO
A1aas	2.52 MAX	.370 / .380	1.07 MAX	.048 / .052	.190 / .210	NO
A1aat	2.40	.185 / .205	.995	.030 / .034	.100 / .107	NO
A1aau	2.75	.370 / .390	1.15	.048 / .052	.190 / .225	NO
A1aav	2.31	.275	1.02	.031	.137	NO
A1aaw	2.34	.204	1.07	.031	.098	NO
A1aax	2.04	.393	.826	.055	.228	NO
A1aay	2.34	.204	1.07	.023	.106	NO
A1aaz	2.160 MIN	.160	1.00 MIN	.040 / .042	.160	NO
A1aba	2.360 MIN	.340 / .360	1.00 MIN	.048 / .052	.340 / .360	NO
A1abb	1.05 MIN	.235 / .265	.400 MIN	.027 / .033	.110 / .140	NO
A1abc	1.05 MIN	.235 / .265	.400 MIN	.057 / .063	.185 / .215	NO
A1abd	1.05 MIN	.235 / .265	1.00 MIN	.017 / .023	.075 / .105	NO
A1abe	2.08 MIN	.196	.944 MIN	.023	.106	NO
A1abf	2.47 MIN	.275	1.10 MIN	.047	.157	NO
A1abg	2.12 / 2.14	.078 / .094	1.02 MIN	.015 MAX	.070 MAX	NO
A1abh	2.16 MIN	.196 MAX	.984 MIN	.023 MAX	.118 MAX	NO
A1abj	2.26 MIN	2.95 MAX	.984 MIN	.031 MAX	.157 MAX	NO
A1abk	2.65 MIN	.295 MAX	1.18 MIN	.047 MAX	.251 MAX	NO
A1abm	2.34 MIN	.340 / .360	1.00 MIN	.048 / .052	.270 / .280	NO

15. OUTLINE DRAWINGS

A2

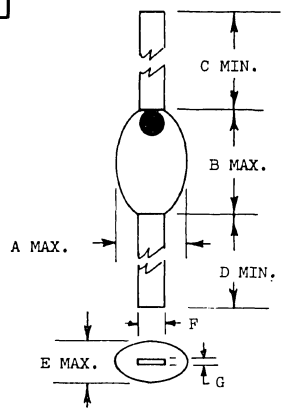

	A	B	C	D	E	F	G
A2	.045	.080	.500	.500		.020	.004
A2a	.030	.075	.500	.500		.020	.004
A2b	.060	.125	.500	.500		.020	.004
A2c	.045	.100	.500	.600		.019	.004
A2d	.060	.150	.500	.500		.045	.005
A2e	.035	.080	.500	.500		.018	.004
A2f	.900	.150	.500	.500		.072	.007
A2g	.050	.100	.500	.500		.018	.004
A2h	.035	.080	.500	.500		.018	.003
A2j	.060	.100	.500	.500		.027	.004
A2k	.059	.098	.315	.500		.022	.003
A2l	.055	.080	.460	.460		.015	.004
A2m	.045	.100	.500	.500		.018	.003
A2n	.090	.150	.500	.500		.072	.007
A2p	.045	.100	.430	.430	.045	.022	.005
A2q	.100	.100	.468	.465	.045	.022	.005
A2r	.060	.100				.018	.005
A2s	.065	.125				.045	.005
A2t	.060	.100	.500	.500		.018	.003
A2u	.070	.150	.500	.500		.047	.005
A2v	.040	.085	.500	.500		.020	
A2w	.060	.100	.500	.500		.040	
A2x	.325	.425	.500	.500		.080	.004

A3

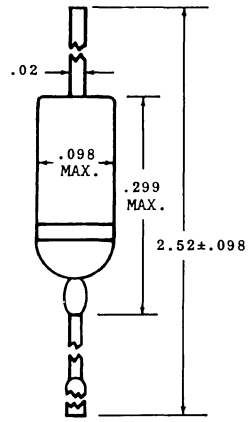

A3c

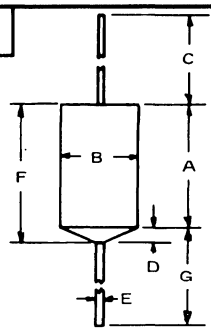

Suffix	A	B	C	D	E	F	G
A3c	.375	.220	1.00	.048	.031 .033		1.00
A3e	.200	.250	1.25	.048	.031 .033		1.25
A3f	.429	.260	1.02	.063	.030 .036		1.02
A3g		.160			.032	.437	
A3h		.160	1.25		.032	.300	1.25
A3j		.160	1.25	.090	.032	.250	1.25
A3k		.182 .192	1.312 1.408		.277 .283	.222 .252	1.312 1.408
A3n		.200	1.00 MIN		.027 .037	.360	1.00 MIN
A3p		.200 MAX	1.25 MIN		.031 .033	.375 MAX	1.25 MIN
A3q		.200 MAX	1.25 MIN		.051	.375 MAX	1.25 MIN
A3r		.200	1.25	.090	.032	.350	1.25
A3s		.200	1.50	.060	.032	.300	1.50
A3t		.220 MAX	1.25 MIN		.031 .033	.375 MAX	1.25 MIN
A3v		.236	1.40		.032	.394	1.40
A3w	.300	.195 .205	1.50 MIN		.032		1.50 MIN
A3x	.350	.195 .205	1.50 MIN		.032		1.50 MIN
A3y		.106 MAX	1.00		.029	.300 MAX	1.00
A3z		.140	1.00 MIN		.030	.200	1.00 MIN
A3aa		.200	1.25 MIN		.032	.380	1.25 MIN
A3ab	.275 MAX	.196 MAX	1.14 MIN	.039 MAX	.039 MAX	.314 MAX	1.00 MIN
A3ac		.190 .210	1.00 MIN		.048 .052	.285 .375	
A3ad		.210 MAX	1.125 MIN	.090	.056 MAX	.375 MAX	
A3ae		.118	.590	.059	.019	.177	.649 .236
A3af		.118	.590	.059	.019	.295 .354	.649
A3ag		.071 .087	.300 MIN		.022 .028	.150 .170	
A3ah		.197 MAX	1.125 MIN		.032	.390 MAX	
A3ai		.210 MAX	1.295 MIN		.056	.390 MAX	
A3aj	.250	.200	1.0		.040		1.0
A3ak		.196	1.0		.051	.375 MAX	1.0
A3al	.425	.375	1.25 MIN		.051		1.25 MIN
A3an		.210 MAX	1.125 1.500	.015 .110	.028 .036	.375	
A3ap			1.13 1.15	.100 MAX	.049 .050	.375 .365	
A3aq		.239 .250	1.10 MIN	.062 MAX	.049 .050	.375 .365	
A3ar		.182 .192			.027 .028	.200 .300	
A3as		.180 .210	1.06 MIN	.047 .110	.047 .055	.285 .375	
A3at		.360 .390	1.248		.028 .036	.250 .350	
A3au		.205	1.102 MIN		.0295	.287 MAX	
A3av		.244	1.142		.047	.2756	
A3ax		.126	.590 MIN		.020	.3189 MAX	
A3ay	.303 .313	.240 .250	1.10 MIN	.062 MAX	.049 .050	.365 .375	1.72 MIN
A3az		.300	1.00 MIN		.050	.375 TYP	1.00 MIN

A6

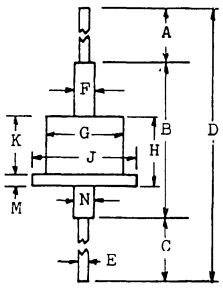

	A	B	C	D	E	F	G	H	J	K	M	N
A6	1.25 MIN	.750 MAX	1.25 MIN	3.250 MIN	.300		.280 MAX	.360 MIN	.375 MAX	.300 MIN	.060 MAX	
A6a				3.25	.027	.051	.236	.276	.374			
A6b	1.00 MIN		.100 MAX		.033	.138 MAX	.280 MAX	.330 MAX	.472 MAX		.157 MAX	275 MAX
A6c	1.00 MIN		.100 MAX		.033	.138 MAX	.280 MAX	.330 MAX	.472 MAX		.394	
A6d	1.00 MIN	.800 MAX	.100 MAX	1.900 MAX	.033	.125	.280 MAX	.330 MAX	.400 MAX		.100 MAX	.180 MAX
A6e	1.31	.900	1.31	3.53	.031	.125	.270	.360	.380			
A6f	1.30	1.09	1.26 MIN	3.66	.035 .043	.098 MAX	.279 MAX	.354 MAX	.377 MAX	.240 MAX	.114 MAX	

A9

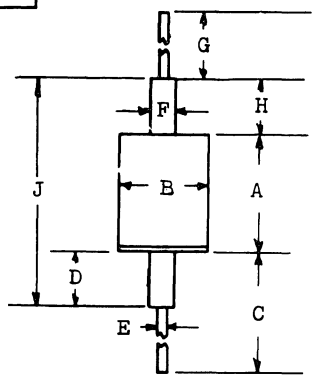

	A	B	C	D	E	F	G	H	J
A9	.313	.250	1.125	.170	.032				
A9a	.322	.236	1.29	.118	.031				
A9b		.150 MAX			.020		1.00 MIN		.600 MAX
A9c	.075	.056 .094			.019 .021				.120 .180
A9d	.108	.068			.020	.032	.758		.160
A9e	.130 MAX	.065 .075			.018 .022	.034 .035	1.00 MIN		.160 .175
A9f	.160	.070			.020		1.00		.180
A9g	.165	.085			.020	.042	1.00 MIN		.220
A9h	.276	.217			.032	.118	1.38		.511
A9j	.313	.219		.073	.030	.063	1.25 MIN	.203	.578
A9k	.500 MAX	.250 MAX			.020 .032	.070 .080	1.00 MIN		.687 .875
A9m	1.500				.020	.075	2.50		.169
A9n		.160 MAX			.018 .022		1.00 MIN		.600 MAX
A9p	.322	.236	1.299	.118	.031	.059	1.181	.188	.629
A9q	.330	.314	1.299	.118	.031	.059	1.181	.188	.637
A9r	.314	.236	1.496	.118	.031	.118	1.377	.118	.551

15. OUTLINE DRAWINGS

A21

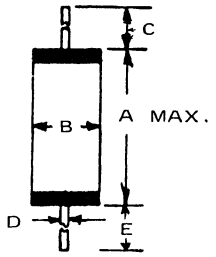

Suffix	A	B	C	D	E
A21	.265	.105	1.0	.02	
A21a	.299	.251	1.18	.039	1.18
A21b	.295 MAX	.157 MAX	.945 MIN	.026	.945 MIN

A24

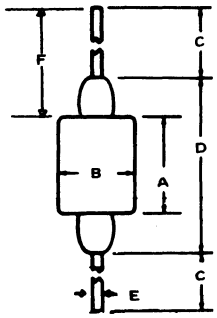

	A	B	C	D	E	F
A24	.354	.197	1.30	.690		
A24a		.256	1.00	.690		
A24b	.134	.083	1.00	.276	.020	
A24c		.106	.078	.377	.019	
A24d	.177	.073 MAX			.022 MAX	.945 MIN

A26

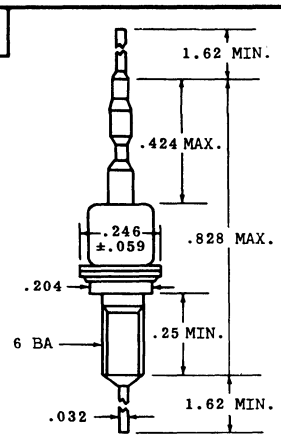

A31

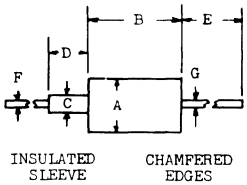

	A	B	C	D	E	F	G	INSULATED SLEEVE	CHAMFERED EDGES
A31	.095 .140	100 .300	.078 MAX		1.50 MAX	.018 .022	.018 .022	NO	NO
A31a	225 MAX	350 MAX	.090 MAX	.210 MAX	1.35 MAX	035 MAX	.035 MAX	NO	NO
A31b	140 MAX	300 MAX	.075 MAX	100 MAX	1.50 MAX	.022 MAX	.022 MAX	NO	NO
A31c	265 MAX	350 MAX	110 MAX	210 MAX	1.00 MAX	035 MAX	035	NO	NO
A31d	.215 .265	195 .350	090 110	210 MAX	1.00 MIN	026 .035	.026 .035	NO	NO
A31e	105 MAX	300 MAX	040		1.00 MIN	018 .022	018 .022	No	YES
A31f	107 MAX	300 MAX			1.00 MIN	.018 .022	018 .022	NO	YES
A31g	125 MAX	300 MAX			1.00 MAX	.018 .022	.018 .022	NO	YES
A31h	.212 .224	354 MAX				031	031	NO	NO
A31j	218	250 MAX		200		029	028	NO	NO
A31k	219	205 MAX		185	1.05	029	029	NO	NO
A31n	230 MAX	250 MAX			1.00	033 MAX	.042 MAX	NO	NO
A31p	.236	354 MAX		197	984	032	.032	NO	NO
A31q	.240	405			1.40	.039	.039	NO	NO
A31r	240	405			1.40	039	.039	YES	NO
A31s	250	225 MAX		173	1.13	032	.032	NO	NO
A31u	315	315 MAX		591	1.38	032	032	NO	NO
A31v	316	292 MAX		687	1.38	032	032	NO	NO
A31w	375	443 MAX		297	1.75	028	028	NO	NO
A31x	.375	563			2.50	032	.032	NO	NO
A31y	375	875			2.50	032	032	NO	NO
A31z	195 230	350 MAX	100 MAX	210 MAX	1.00 MIN	026 041	026 041	NO	NO
A31aa	225	250		032			032	YES	NO
A31ab	280			052	1.35		052	YES	NO
A31ac	225 MAX	350 MAX	090 MAX	210 MAX	.125 MIN	026 035	026 035	YES	NO

A32

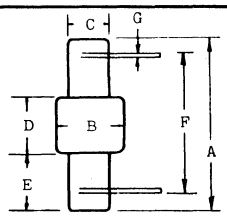

	A	B	C	D	E	F	G
A32	.260	.105	.060	.080			
A32a	.238	.087	.060	.080			
A32b	.540	.142	.093	.170	.185		
A32c	.560	.240	.130	.360	.100	.500	.020
A32d	.500	.240	.130	.300	.200	.420	.020

A19

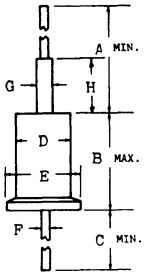

	A	B	C	D	E	F	G	H
A19	1.25 MIN	.30 MAX	1.25 MIN	.185	.220	.026	.040	
A19a	1.25 MIN	.345 MAX	1.25 MIN	.200 MAX	.230 MAX	.030	.070 MAX	.135 MAX
A19b	1.25	.180 .225	1.25		.200 .230	.029 .033		.120 .200
A19c	1.33 MIN	.677 MAX	1.378	.279 MAX	.378 MAX	.035 .043	.098 MAX	.374 MAX
A19d	1.52	.330	1.49	.263	.374	.039		.339

A34

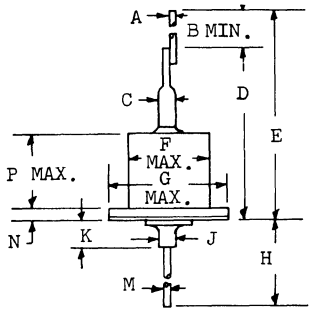

Suffix	A	B	C	D	E	F	G	H	J	M	N	P
A34a	.020	1.040	.063 MAX	.630	1.670	.248 MAX	.386 MAX	1.22 MIN	.030	.030	.046 MAX	.240 MAX
A34d	.034	1.380	.063	.590	1.970		.382	1.380	.032	.032		
A34e	.024	1.06		.65 MAX		.268	.394	1.26 MIN		.036		.296

15. OUTLINE DRAWINGS

A145

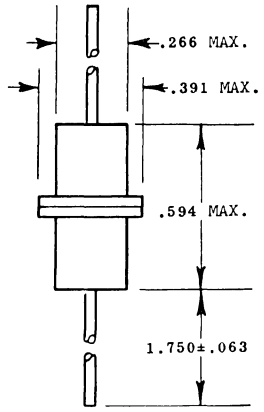

A146

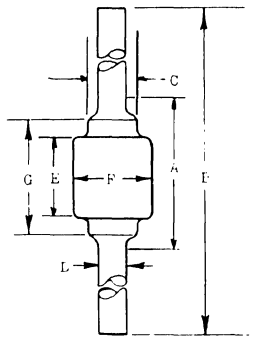

	A	B	C	D	E	F	G
A146		1.562 1.688		.026 .030	.080 .110	.080 .110	.125 .161
A146a			.035	.020	.080	.070	
A146b			.055	.028	.085	.085	
A146c			.115	.040	.050	.145	
A146d		1.63		.028		.075	
A146e		2.03		.040		.120	
A146f	.250 MAX	1.68	.055	.028	.085	.085	
A146g	.250	2.25	.035	.020	.070	.080	
A146h	.260	2.30				.104	.160
A146j	.275	1.62		.028	.085	.085	
A146k	.300	2.30		.039 .041		.134 .136	
A146m	.350 MAX	2.300 MIN	.115 TYP	.039 .041	.100 TYP	.145 MAX	.175 TYP
A146n	.280	2.28		.039 .041			
A146p	.350 MAX	2.30 MIN		.039 .041	.100 .140	.100 .140	.150 .200
A146q	.236	2.41	.059	.043 MAX	.118 MAX	.112 MAX	
A146r	.250 MAX	1.625 1.675		.027 .029	.065 .085	.065 .085	
A146s	.170 MAX	2.122 MIN		.014 .021	.076 MAX	.076 MAX	
A146t	.300 MAX	2.300 2.400		.040	.115 .140	.115 .140	
A146u	.200 .275	1.62 MIN		.027 .031	.085 TYP	.085 MAX	

A149

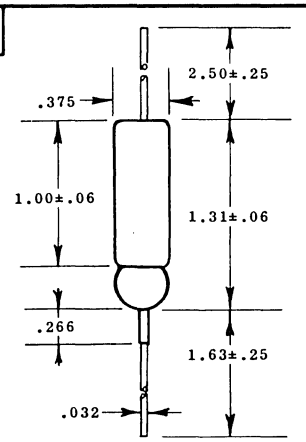

A154

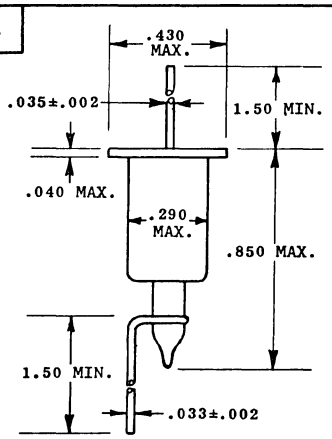

A159

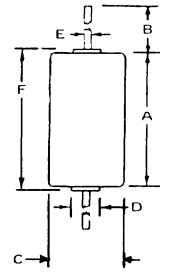

	A	B	C	D	E	F
A159	.147 .153	1.12 MIN	.068 .078	.030 .034	.018 .022	.160 .176
A159a	.149 MAX	1.023 1.181	.074 MAX		.021 MAX	
A159b		1.00 MIN	.120 .150		.029 .033	.240 .270

A163

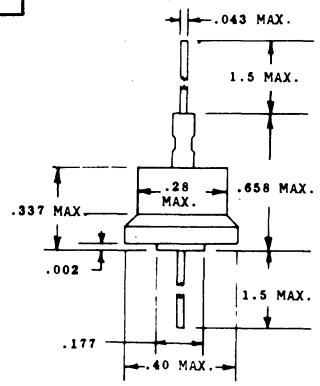

A167

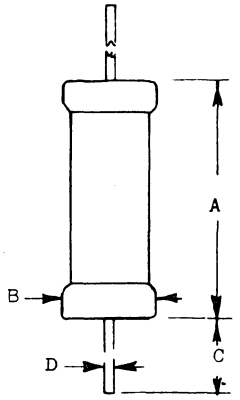

	A	B	C	D
A167	.500	.225	1.50	.032
A167a	.690	.250	2.50	
A167b	2.50	.250	2.50	
A167c	.590	.180	1.57	.031
A167d	.670	.180	1.57	.031
A167e	1.65	.394	1.58	.032
A167f	2.44	.394	1.58	.032
A167g	3.03	.394	1.58	.032
A167h	2.68	.591	.354	.197
A167j	3.27	.591	.354	.197
A167k	4.25	.591	.354	.197
A167m	5.04	.591	.354	.197
A167n	6.61	.591	.354	.197
A167p	7.80	.591	.354	.197
A167r	5.04	.827	.354	.197
A167s	6.61	.827	.354	.197
A167t	7.80	.827	.354	.197
A167u	8.98	.827	.354	.197
A167v	.406	.437	1.50	20-GA
A167w	1.00	.850		.030
A167x	2.00	.850		.030
A167y	2.50	.850		.030
A167z	3.00	.850		.030
A167aa	.748	.236	1.37 MIN	.031
A167ab	1.417	.366	1.181	.031
A167ac	2.047	.366	1.181	.031
A167ad	2.677	.366	1.181	.031
A167ae	3.307	.366	1.181	.031
A167af	3.937	.366	1.181	.031
A167ag	4.566	.366	1.181	.031
A167ah	5.196	.366	1.181	.031
A167aj	.699	.366	1.377	.031
A167ak	1.062	.366	1.377	.031
A167am	1.456	.366	1.377	.031
A167an	1.850	.366	1.377	.031
A167ap	2.480	.366	1.377	.031

A168

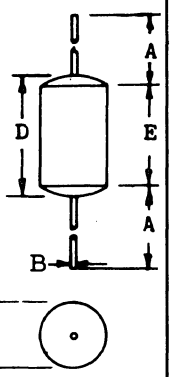

	A	B	C	D	E
A168c	1.25 MIN	.031 .032	.210 MAX	.280 .300	
A168d	1.58 MIN	.035	.413 MIN		1.73 1.81
A168e	2.00 MIN	.032	.365 .385		1 3/4
A168f	2.00 MIN	.032	.365 .385		1 15/16
A168g	2.00 MIN	.032	.365 .385		2 5/16
A168h	2.00 MIN	.032	.365 .385		2 5/8
A168j	2.00 MIN	.032	.365 .385		3.00
A168k	2.00 MIN	.032	.365 .385		3 1/2
A168m	2.00 MIN	.032	.365 .385		4 1/16

15. OUTLINE DRAWINGS

A41

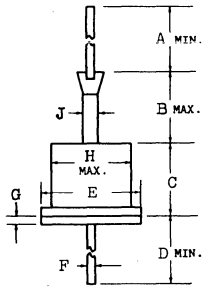

Suffix	A	B	C	D	E	F	G	H	J
A41	1.07	.310	.296	1.20	.375	.030	.046	.270	.060
A41a	1.50	.200	.225	1.50	.230	.032			
A41b	1.38	.355	.295 MAX	1.38	.400 MAX	.0315		.268	.0591
A41c	1.06 MIN	.354	.295 MAX	1.26	.394 MAX	.0295		.268	
A41d			.300 MAX	1.00	.390 MAX	.030			
A41e		.210 MAX	.315 MAX	1.125	.241	.031		.241	
A41f		.175	.315 MAX	1.125	.240	.031		.240	
A41h	1.37		.334	1.37	.314	.031		.314	
A41j	.110 MAX	.210 MAX	.350 MAX	1.125	.215 / .265	.031		.215 / .265	
A41k	1.4			1.4	.453 MAX	.032		.256 MAX	
A41l	1.00	.354	.413 MAX	1.00	.271 MAX	.031		.205	.06
A41n	1.322	.197	.291	1.37	.334			.314	
A41p	1.250	.200	.225	1.250	.230 MAX	.033			
A41q	1.250	.185	.225	1.250	.230 MAX	.033			

A47

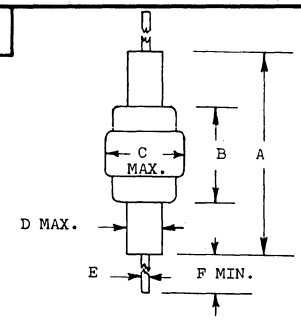

	A	B	C	D	E	F
A47	.760	.30	.140	.076	.030	1.25
A47a	.875		.250	.075	.020	1.00
A47b	.875	.50	.180	.080	.035	1.00

A50

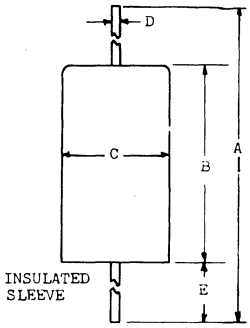

	A	B	C	D	E	INSULATED SLEEVE
A50		.405 MAX	.240 MAX	.031	1.40 MAX	NO
A50a		.405 MAX	.240 MAX	.031	1.40 MAX	YES
A50b	1.00	.360	.150	.031		NO
A50c	1.25	.360	.236	.029	1.50	NO
A50d	1.38	.401	.236	.031		NO
A50e	1.30 MIN	.300 MAX	.140 MAX	.035 MAX	1.00 MIN	NO
A50f	2.25	.250	.115	.020	1.00	NO
A50g	1.65	.433	.118	.019	.608	NO
A50h		.480 / .520	.365 / .385	.047 / .053	.750 MIN	NO

A52

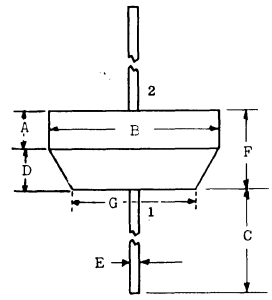

	A	B	C	D	E	F	G	1	2
A52		.500	1.50		.032	.187		C	A
A52a		.140 MAX	1.00 MIN		.032	.150 MAX			
A52b		.147 / .167	.550 / .625		.027 / .033	.185 / .215			
A52c		.200			.032	.375			
A52d		.210 MAX	1.12		.056 MAX	.375 MAX			
A52e	.155	.140	1.00 MIN		.030	.200 MAX			
A52f	.184	.100	1.00 MIN		.030	.200	.070		
A52g	.233 / .237	.198 / .202	1.375 MIN		.028 / .032	.298 / .302	.098 / .102		
A52j	.313	.256	1.06		.033	.437	.125		
A52k		.268 MAX	.787 MIN		.043 MAX	1.00 MAX			
A52m	.302 / .312	.240 / .250	1.18 / 1.20	.062	.049 / .050	.365 / .375			
A52n		.210 MAX	1.12		.029 / .035	.375 MAX			
A52p		.133 / .149	1.06 MIN		.031	.275 MAX			
A52q		.210 MAX	1.375 MIN		.052	.335 MAX		C	A
A52r	.138	.110 / .126	.700 / .716	.059	.020 MAX	.177 / .236	.059		
A52s		.130 / .140	1.00 MIN		.028 / .034	.140 / .150			

A53

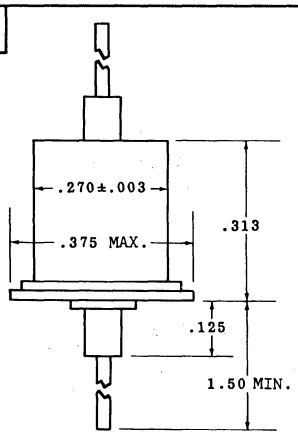

A54

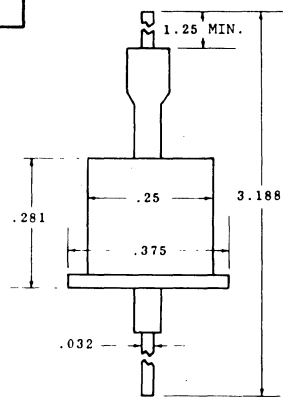

A55

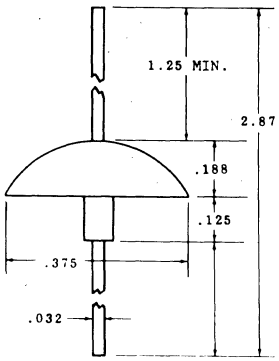

A56

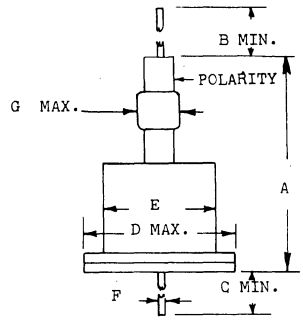

	A	B	C	D	E	F	G	POLARITY
A56	.62	1.28	1.36	.388	.24	.032	.19	
A56a	.826	1.18	1.18	.393	.275	.031	.125	ANODE
A56b	.826	1.18	1.18	.393	.275	.031	.125	CATHODE

15. OUTLINE DRAWINGS

A60

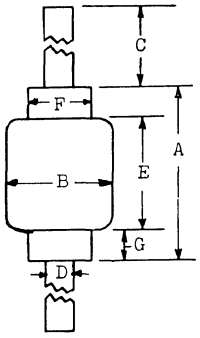

Suffix	A	B	C	D	E	F	G
A60	.160	.085	.750 MIN	.028	.080	.055	
A60b	.220	.085	1.00 MIN	.020	.165	.042	
A60d		.065 MAX	1.00 MIN	.020 MAX	.085 MAX	.035 MAX	.050 MAX
A60e	.100 MAX	.065 MAX	.900 MIN	.020			
A60f	.155 MAX	.085 MAX	.750 MAX	.028			
A60g	.165 MAX	.074 MAX	1.02 MIN	.019			
A60h	.177 MAX	.079 MAX	1.00 MIN	.020	.154 MAX		
A60j	.180 MAX	.085 MAX	1.00 MIN	.031	.165 MAX		
A60k	.180 MAX	.100 MAX	1.00 MIN	.059	.165 MAX		
A60m	.196 MAX	.086 MAX	1.37 TYP	.019			
A60n	.250 MAX	.850 MAX	.710 MIN	.028			
A60p	.300 MAX	.125 MAX	1.25 MIN	.020			
A60q	.350 MAX	.145 MAX	.975 MIN	.040			
A60r	.280 MAX	.150 MAX	1.00 MIN	.039 / .041	.150 TYP		.065 TYP
A60s	.330	.060 / .080	1.00	.018 / .022	.140 / .180		.025
A60t	.220 MAX	.103 MIN	1.14 MAX	.032			
A60u		.078 MAX	1.06 MIN	.019	.177 MAX		
A60v	.165 / .175	.090 / .100	1.10 / 1.20	.029 / .031	.148 / .155	.053 / .057	.017 / .020
A60w	.235 MAX	.110 MAX	.100 MIN	.030			
A60x	.265 MAX	.140 MAX	1.00 MIN	.019 / .021			
A60y	.160 MAX	.072	.800 MIN	.030	.090	.040	
A60z	.160 MAX	.100	.800 MIN	.030	.100	.055	
A60aa	.300 MAX	.105 MAX	1.00 MIN	.021 MAX			
A60ab	.160 MAX	.085 MAX	1.00 MIN	.020	.100 MAX	.040	
A60ac	.225 / .260	.060 / .090	1.00 MIN	.028 / .032	.130 MAX	.038 / .042	
A60ad	.160 MAX	.100 MAX	1.00 MIN	.028 / .032	.085		
A60ae	.280 MIN	.150	1.00 MIN	.040			
A60af	.250 MAX	.070 MAX	.975 MIN	.019 / .021		.040 MAX	
A60ah	.250 MAX	.090 MAX	.975 MIN	.027 / .029		.055 MAX	
A60aj	.250 MAX	.085	.700 MIN	.027 / .029	.085 MAX	.055	
A60ak	.300 MAX	.145 MAX	.975 MIN	.039 / .041	.105	.115	
A60al	.224 MAX	.118 MAX	1.10 MIN	.041 MAX	.181	.062 MAX	
A60an	.200 MAX	.090	.975 MIN	.014 / .021			
A60ap	.155 MAX	.070 MAX	.975 MIN	.019 / .021		.040 MAX	
A60aq	.259 / .281	.395 / .405	.990 MIN	.050 / .053	.234 / .246	.218 / .222	
A60ar	.281	.395 / .405	1.00 MIN	.051	.281	.218 / .222	
A60as	.180 MAX	.135 MAX	1.00 MIN	.040 NOM			
A60at	.300 MAX	.145 MAX	1.00 MIN	.020 NOM			
A60au	.200	.12	1.14	.031			

A69

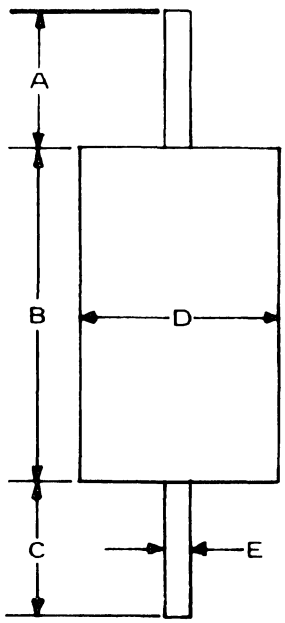

Suffix	A	B	C	D	E
A69a	1.024 MIN	.159 MAX	1.024 MIN	.062 MAX	.020
A69b	2.000 MIN	1.500	.030	.500	.030
A69c	2.000 MIN	2.000	.030	.500	.030
A69d	2.000 MIN	2.500	.030	.375	.030
A69e	2.000 MIN	3.000	.030	.375	.030
A69f	2.000 MIN	3.000	.030	.500	.030
A69g	1.100 MIN	.360 / .375	1.100 MIN	.190 / .205	.038 / .042
A69h	1.000 MIN	.720 / .780	1.000 MIN	.240 / .260	.030 NOM
A69j	1.250 MIN	.375 MAX	1.250 MIN	.200 MAX	.037 / .044
A69k	.099 MIN	.452 MAX	.099 MIN	.137 MAX	.022 MAX
A69m	.866 MIN	.724 MAX	.866 MIN	.165 MAX	.022 MAX
A69n	1.000 / 1.250	.140 / .165	1.000 / 1.250	.085 / .140	.027 / .031
A69p	.900 / 1.100	.140 / .165	.900 / 1.100	.135 / .180	.036 / .040
A69q	1.000 / 1.500	.130 / .300	1.000 / 1.500	.055 / .130	.018 / .023
A69r	.750	.600	.750	.160	.020
A69s	.750	.600	.750	.160	.032
A69t	1.00 MIN	.550	1.00 MIN	.200	.020
A69u	.500 MIN	.405	.500 MIN	.240	
A69v	1.125 MIN	.520 MAX	1.125 MIN	.275 MAX	.030 / .032
A69w	1.000 MIN	1.030 MAX	1.000 MIN	.378 MAX	.030 / .032
A69x	1.000 MIN	.655 MAX	1.000 MIN	.641 MAX	.030 / .032
A69y	1.000 MIN	1.220 MAX	1.000 MIN	.641 MAX	.030 / .032
A69aa	2.00	.100	2.000	.470 / .500	.050
A69ab	2.0	1.625	2.000	.470 / .500	.050
A69ac	2.0	2.0	2.000	.470 / .500	.050
A69ad	2.0	2.375	2.000	.470 / .5000	.050
A69ae	2.0	2.500	2.000	.470 / .500	.050
A69af	2.0	3.250	2.000	.470 / .500	.050
A69ag	2.0	3.500	2.000	.470 / .500	.050
A69ah	.500	.120 / .170	.500	.05 / .07	.018 / .021
A69ai	1.02	.385	1.02	.200	.050
A69ak	1.25 MIN	.53	1.25 MIN	.405 MAX	.031
A69am	1.25 MIN	1.03	1.25 MIN	.405 MAX	.031
A69an	1.25 MIN	1.53	1.25 MIN	.510 MAX	.031
A69ap	1.25 MIN	2.03	1.25 MIN	.510 MAX	.031
A69ar	1.25 MIN	2.53	1.25 MIN	.510 MAX	.031
A69as	1.25 MIN	3.03	1.25 MIN	.510 MAX	.031
A69at	1.25 MIN	4.03	1.25 MIN	.510 MAX	.031
A69au	1.25 MIN	1.03	1.25 MIN	.510 MAX	.031
A69ax	1.00 MIN	.750 MAX	1.00 MIN	.250 MAX	.030

A73

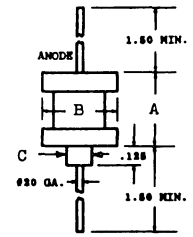

	A	B	C
A73	.438	.375	
A73a	.438	.500	
A73b	.406	.312	.080

A79

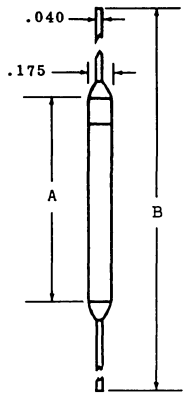

	A	B
A79a	.750	2.750
A79b	1.125	3.062
A79c	2.075	4.062
A79d	3.688	5.688

A82

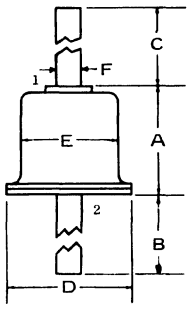

Suffix	A	B	C	D	E	F	1	2
A82	.100 MAX		1.00 MIN	.110 MAX	.085 MAX	.019 / .022	A	C
A82a	.100 MAX		1.00 MIN	.110 MAX	.085 MAX	.019 / .022	C	A
A82b	.360 MAX	1.125 MIN	1.125 MIN	.220 MAX	.190	.020 MAX		
A82c	.370 MAX	1.125 MIN	1.125 MIN	.230 MAX		.021 MAX		
A82d	.500 MAX	1.062 MIN	1.062 MIN	.250 MAX	.219	.032 MAX		
A82e	.660 MAX	1.125 MIN	1.125 MIN	.225 MAX		.032 MAX		
A82f	.080	1.25	1.25	.100	.075	.020		
A82h	.280 / .440	1.00 MIN	1.00 MIN	.610 / .640	.498 / .508	.048 / .054		

15. OUTLINE DRAWINGS

A83

Suffix	A	B	C	D	E	F
A83a	.400 MIN	.450	.145 / .175	.020	.450	.145 / .175
A83j	.320		.118	.020	.100	.118
A83k	.433 MAX		.512 MAX	.236	1.50 MIN	.256 MAX
A83u	.630 MAX		.512 MAX	.236	1.50 MIN	.256 MAX
A83v	.632 MAX		.500 MAX	.032	1.50 MIN	.265 MAX
A83w	.632 MAX	1.50 MIN	.532	.025		.265 MAX
A83ag	1.00 MAX		.510 MAX	.051	1.50 MIN	.260 MAX
A83ak	1.032 MAX	1.50 MIN	.532	.025		.265 MAX
A83aq	1.32		.187	.032 MIN	.100	.187
A83ax	1.432 MAX	1.50 MIN	.532	.025		.265 MAX
A83az	1.62 MAX		.510 MAX	.051	1.50 MIN	.260 MAX
A83bd	1.832 MAX	1.50 MIN	.532	.025		.265 MAX
A83bk	2.00 MAX		.510 MAX	.051	1.50 MIN	.260 MAX
A83bn	2.36 MAX		.512 MAX	.236	1.50 MIN	.256 MAX
A83bp	2.37 MAX		.510 MAX	.051	1.50 MIN	.260 MAX
A83br	2.50 MAX		.510 MAX	.051	1.50 MIN	.260 MAX
A83bu	3.14 MAX	1.50 MIN		.023	1.50 MIN	.472 MAX
A83bv	3.15 MAX		.512 MAX	.236	1.50 MIN	.256 MAX
A83bw	3.20 MAX		.510 MAX	.051	1.50 MIN	.260 MAX
A83by	4.25 MAX		.510 MAX	.051	1.50 MIN	.260 MAX
A83cd	.130	.500 MIN	.060	.014	.500 MIN	.060
A83cf	1.470 / 1.530	1.500 MIN	.280 / .320	.029 / .033	1.500 MIN	.029 / .033
A83cg	.400 MAX	.400 MIN	.150 MAX		.400 MIN	.150 MAX
A83ch	2.470 / 2.530	1.500 MIN	.280 / .280	.029 / .033	1.500 MIN	.029 / .029
A83cq	.400 MAX	.400 MIN	.150 MAX		.400 MIN	.150 MAX
A83cr	.875 / 1.125	.200 MIN	.219 / .281	.030 / .034	.200 MIN	.219 / .281
A83cs	1.875 / 2.125	.200 MIN	.219 / .281	.030 / .034	.200 MIN	.219 / .281

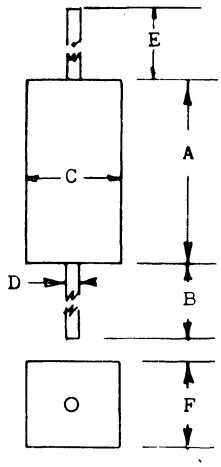

Suffix	A	B	C	D	E	F
A38ct	2.875 / 3.125	.200 MIN	.219 / .281	.030 / .034	.200 MIN	.219 / .281
A83cu	1.375 / 2.625	.200 MIN	.219 / .281	.030 / .034	.200 MIN	.219 / .281
A83cv	2.375 / 3.625	.200 MIN	.219 / .281	.030 / .034	.200 MIN	.219 / .281
A83cw	1.45	.984 / 1.37	.314	.039	.984 / 1.37	.472
A83cx	1.45	1.37 / 1.77	.314	.039	1.37 / 1.77	.472
A83cy	2.36	1.37 / 1.77	.314	.039	1.37 / 1.77	.472
A83cz	.719 / .781		.250	.032		
A83da	.875 MAX	1.25 MIN	.375 MAX	.032	1.25 MIN	.250 MAX
A83db	1.375 MAX	1.25 MIN	.375 MAX	.032	1.25 MIN	.250 MAX
A83dc	1.75 MAX	1.25 MIN	.400 MAX	.032	1.25 MIN	.400 MAX
A83dd	.846	.984	.275		.984	.275
A83de	.180 / .220	.600 MIN	.070 / .090	0.02	.600 MIN	.070 / .090

A86

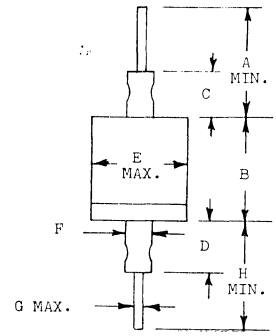

	A	B	C	D	E	F	G	H
A86	1.125	.290	.156	.156	.250	.065	.031	1.125
A86a	1.00	.500	.187	.187	.250	.075	.026	1.00
A86b	1.125	.616	.170 MAX	.170 MAX	.265	.080 MAX	.026 / .036	1.125
A86c	1.125	.315	.170 MAX	.170 MAX	.265		.031	1.125

A87

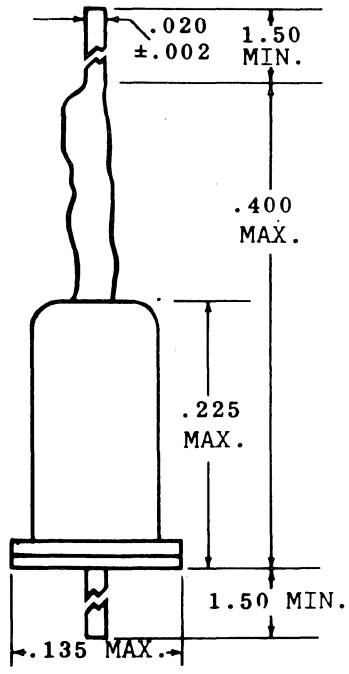

A89

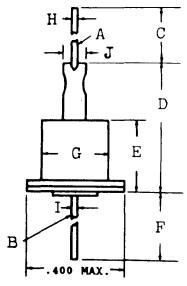

	A	B	C	D	E	F	G	H	I	J
A89	CATHODE	ANODE	1.00	.625	.310	1.25	.280	.020	.030	.100
A89a	ANODE	CATHODE	1.05	.657	.354	1.00	.312	.043	.043	
A89b	ANODE	CATHODE	1.38	.590	.256	1.38	.252	.031	.031	
A89c	ANODE	CATHODE	1.00	.656	.313	1.25	.253	.026	.026	.060
A89d	ANODE	CATHODE						.045	.045	
A89e	ANODE	CATHODE		.629 MAX		1.259	.255	.027	.027	.098 MAX

15. OUTLINE DRAWINGS

A94

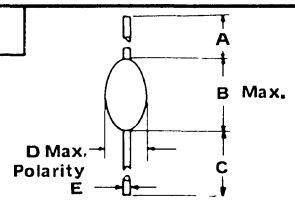

Suffix	A	B	C	D	POLARITY	E
A94	.450	.080	.450	.045	DOT CATHODE	.011
A94a	.450	.100	.450	.060	DOT CATHODE	.011
A94g	1.00	.180	1.00	.150	BAND CATHODE	.035 MAX
A94j	1.13 MIN	.180	1.13 MIN	.100 .150	BAND CATHODE	.029 .035
A94m	1.10 MIN	.240 .260	1.10 MIN	.170 .250	BAND CATHODE	.048 .052
A94q	.750 MIN	.130 MAX	.750 MIN	.085 MAX	DOT CATHODE	.015
A94s	1.02	.181	1.02	.129	BAND CATHODE	.033
A94t	.787	.196	.787		BAND CATHODE	.019
A94u	1.102 MIN	.472	1.102 MIN	.137		.023
A94v	.787 MIN	.138 MAX	.787 MIN	.086 MAX		.015
A94w	.984 MIN	.197 MAX	.984 MIN	.118 MAX		.019
A94x	1.000 MIN	.226 MIN	1.000 MIN	.250 MAX	BAND CATHODE	.053
A94y	1.100 MIN	.160 .205	1.100 MIN	.080 .138	BAND CATHODE	.028 .034
A94z	1.140 MIN	.200 MAX	1.140 MIN	.140 MAX	BAND CATHODE	.120
A94aa	1.00	.236	1.00	.178		.036
A94ab	1.00 MIN	.300 MAX	1.00 MIN	.190 MAX		.037 .043
A94ac	1.00 MIN	.350 MAX	1.00 MIN	.190 MAX		.037 .043
A94ad	1.00 MIN	.350 MAX	1.00 MIN	.140 MAX		.027 .033
A94ae	1.00 MIN	.180 MAX	1.00 MIN	.150 MAX	BAND CATHODE	.027 .031
A94af	1.00 MIN	.140 .300	1.00 MIN	.135 .180	BAND CATHODE	.040 MAX

A97

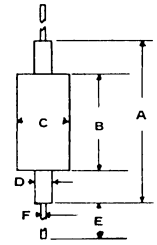

	A	B	C	D	E	F	REMARKS
A97	.687 .875	.500 MAX	.250 MAX	.070 .080	1.00 MIN	.020 .032	
A97a	.195 .300		.078 .107		1.00 1.50	.018 .022	
A97b	.140 .180		.056 .075		1.00 1.50	.018 .022	FERRULE OPTIONAL
A97c	.080 .120		.050 .065		1.00 1.50	.018 .022	FERRULE OPTIONAL

A99

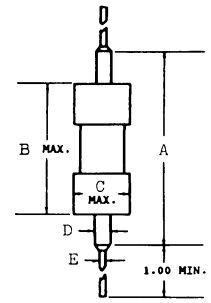

	A	B	C	D	E
A99	.875	.500		.075	.026

A109

	A	B	C	D
A109	.130	.500	.055	.020x.004
A109a	.100	.500	.050	.020x.004
A109b	.100		.085	
A109c	.165 MAX	1.29 MAX	.110 MAX	
A109d	.080		.065	.014
A109e	.188 MAX	.100 .125	.177 MAX	
A109f	.271 MAX	.100 .125	.267 MAX	
A109g	.085	.500 MIN	.065	
A109h	.314	1.14	.118	.025
A109j	.420 MAX	1.00 MIN	.160 MAX	.021 .027
A109k	.192	1.28 MIN	.118 MAX	.025 MAX
A109l	.366	1.22 MIN	.118 MAX	.025 MAX
A109m	.374 MAX	1.14 MIN	.118 MAX	.025 MAX
A109n	.433 MAX	1.102 MIN	.118 MAX	.025 MAX
A109o	.492 MAX	1.062 MIN	.118 MAX	.025 MAX

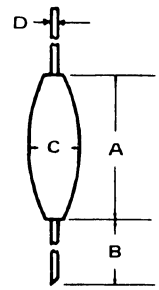

A115

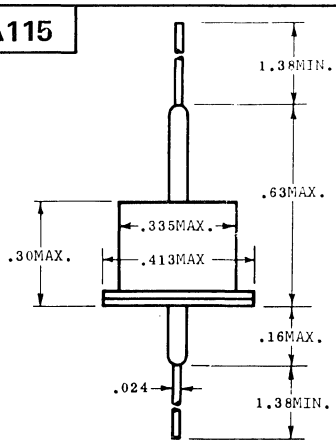

A123

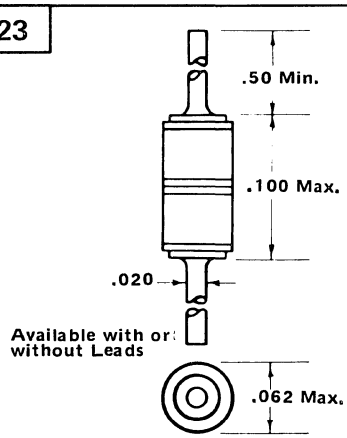

A134

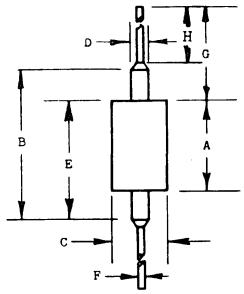

	A	B	C	D	E	F	G	H
A134	.497	.729	.217	.071	.610	.032		
A134a	.100 MAX	.160 MAX	.070 MAX	.030		.020	1.00 MIN	
A134b	.120	.236	.082	.039		.020		
A134c	.133	.236	.082		.184	.020	1.05	
A134d	.495	1.00	.385	.250		.032	1.40 MIN	
A134e	.134 MAX		.082 MAX			.022 MAX		1.00 MIN

A138

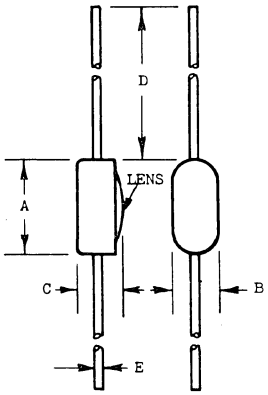

	A	B	C	D	E	LENS	CHAMFERED EDGES
A138	.315	.158	.158	1.58 MAX	.024	YES	YES
A138a	.315	.157	.197	1.00	.020	NO	NO
A138b	.315	.158	.158	1.58	.016	NO	NO
A138c	1.125	.250	.500	2.00	.051	NO	NO
A138d	1.500	.250	.500	2.00	.040	NO	NO
A138e	1.500	.375	.687	2.00	.051	NO	NO
A138f	1.625	.250	.500	2.00	.051	NO	NO
A138g	2.00	.250	.500	2.00	.051	NO	NO
A138h	2.375	.250	.500	2.00	.051	NO	NO
A138j	2.500	.250	.500	2.00	.040	NO	NO
A138k	2.500	.375	.687	2.00	.051	NO	NO
A138m	2.700	.250	.500	2.00	.051	NO	NO
A138n	2.750	.250	.500	2.00	.051	NO	NO
A138p	3.00	.250	.500	2.00	.040	NO	NO
A138q	3.50	.250	.500	2.00	.051	NO	NO
A138r	3.50	.375	.687	2.00	.051	NO	NO
A138s	4.250	.250	.500	2.00	.051	NO	NO
A138t	4.500	.375	.687	2.00	.051	NO	NO
A138u	5.500	.375	.687	2.00	.051	NO	NO
A138v	6.500	.375	.687	2.00	.051	NO	NO
A138w	1.47 1.53	.370 .390	.670 .710	2.00 MIN	.048 .054	NO	NO
A138x	2.47 2.53	.370 .390	.670 .710	2.00 MIN	.048 .054	NO	NO
A138y	3.47 3.53	.370 .390	.670 .710	2.00 MIN	.048 .054	NO	NO
A138z	4.47 4.53	.370 .390	.670 .710	2.00 MIN	.048 .054	NO	NO

15. OUTLINE DRAWINGS

A171

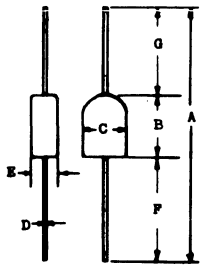

	A	B	C	D	E	F	G
A171		.295	.177	.019	.165	.984	.984
A171a		.314	.177	.023	.216	.984	1.18
A171b	2.38	.492	.255	.040	.255		
A171c	2.45	.276	.138	.020	.138		
A171d	2.461	.374	.196	.031	.196		
A171f	2.58	.276	.098	.020	.098		
A171g	2.80	1.60	.300	.040	.300		
A171h	2.44	.440 MAX	.137 MAX	.022 MAX	.137 MAX	1.00 MIN	1.00 MIN
A171j		.287 MAX	.134 MAX	.022 MAX		1.00 MIN	1.14 MIN
A171k	2.382 MIN	.492 MAX	.256 MAX	.041 MAX	.256 MAX	.945 MIN	.945 MIN
A171m	2.87 MIN	.452 .511		.019	.149 .165	1.20 1.36	1.20 1.36
A171n	2.87 MIN	.570 .629		.023	.149 .165	1.20 1.31	1.20 1.31
A171p	2.874 MIN	.452 .511	.149 .165	.019		1.208 1.366	1.208 1.366

A179

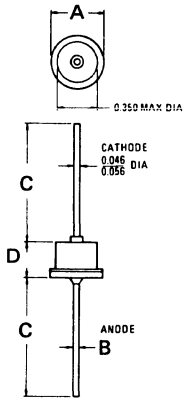

	A	B	C	D
A179	.420 MAX	.052 MAX	1.00 MIN	.300 MAX
A179a	.450 MAX	.056 MAX	1.00 MIN	.300 MAX
A179b	.450 MAX	.051 MAX	1.00 MIN	.300 MAX
A179c	.450 MAX	.046 .056	.980 MIN	.300 MAX

A182

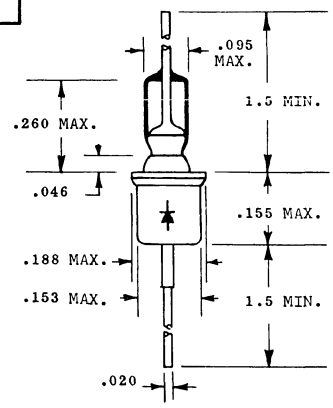

A185

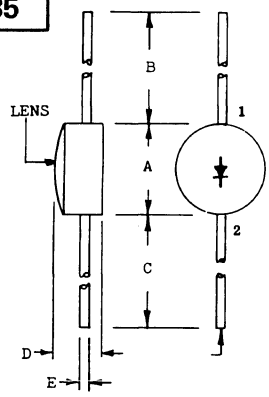

	A	B	C	D	E	1	2	CHAMFERED EDGES	LENS
A185	.472 MAX	1.57 MIN	1.57 MIN	.216 MAX	.027	A	C		YES
A185a	.350	1.77	.158	.220	.024			YES	YES
A185b	.500 MAX	.475 MIN	.475 MIN	.175 MAX	.03x.015			YES	NO
A185d	.635 MAX	1.00 MIN	1.00 MIN	.165 MAX	.02x.05			YES	NO
A185e	.240 MAX	.100 MIN	1.00 MIN	.160 MAX	.020			YES	NO
A185f	.140	.180 MIN	.180 MIN	.030	.002			NO	NO
A185g	.374 MAX	2.36 MIN	2.36 MIN	.236 MAX	.019			YES	NO
A185h	.100	.125	.125	.050	.004			NO	NO

A188

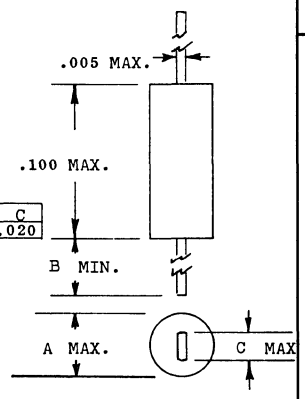

	A	B	C
A188	.060	.600	.020

A189

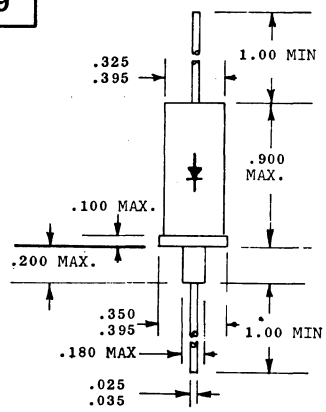

A221

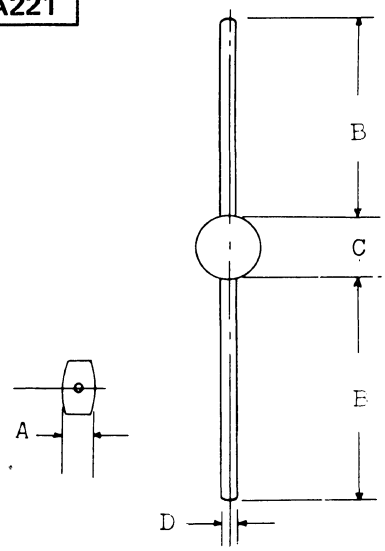

	A	B	C	D
A221	.197	1.417 MIN	.434 MAX	.028
A221a	.197	1.42	.434	.023
A221b	.197	1.42	.434	.028
A221e	.236	.984	.433	.024
A221f	.236	1.42	.434	.028
A221g	.236	2.36	.433	.019

A230

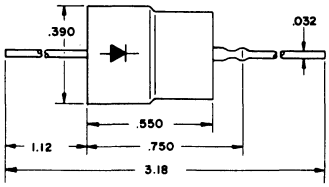

A231

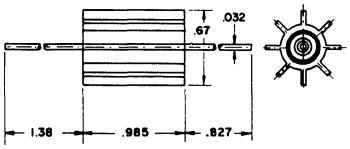

15. OUTLINE DRAWINGS

A246

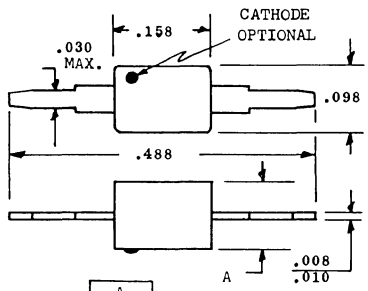

	A
A246	.094
A246a	.080

A248

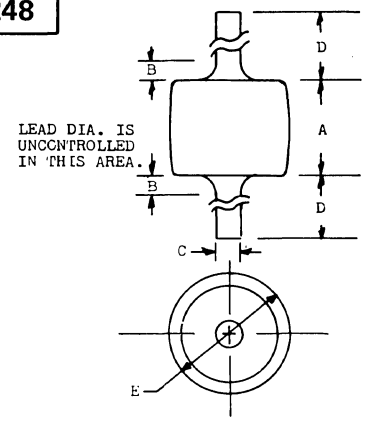

	A	B	C	D	E	CHAMFERED EDGES
A248	.130 .160	.030 MAX	.037 .041	.900 MIN	.125 .155	YES
A248a	.130 .160	.030 MAX	.037 .041	.900 MIN	.145 .180	YES
A248b	.130 .160	.050	.037 .042	.900 1.250	.115 .180	NO
A248d	.140 .165	NA	.029 .033	1.250 MIN	.065 .110	NO
A248e	.140 .165	.030 MAX	.026 .033	1.00 1.25	.065 .110	NO
A248f	.140 .300	.050 MAX	.036 .042	.900 1.50	.090 .145	NO
A248g	.165 MAX	NA	.038 .042	.9175 MIN	.180 MAX	NO
A248j	.200 .260	.030 MAX	.049 .053	.900 1.25	.160 .230	YES
A248k	.300 .435	.050 MAX	.027 .034	1.00 MIN	.150 .185	NO
A248m	.190 .215	.030 MAX	.028 .033	1.00 1.25	.065 .110	NO
A248n	.140 .165	.030 MAX	.038 .042	.900 1.10	.065 .110	NO
A248p	.190 .215	.030 MAX	.029 .033	1.00 1.25	.065 .110	NO
A248q	.140 .165	.060 MAX	.036 .040	.900 1.100	.135 .165	NO

A249

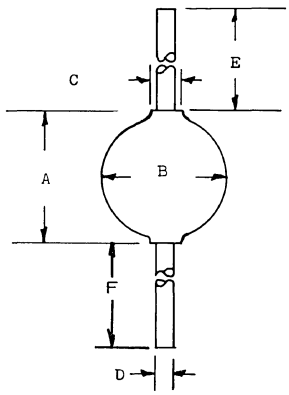

Suffix	A	B	C	D	E	F
A249	.240 .260	.250 MAX	.083 MIN	.053 MAX	1.000 MIN	1.000 MIN
A249a	.196 MAX	.177 MAX		.035 MAX	.984 MIN	.984 MIN
A249b	.275 MAX	.130 .150		.028 .032	1.13	
A249c	.196 MAX	.157 MAX		.028 .032	1.14 MIN	1.14 MIN
A249d	.240 .260	.250		.048 .052	1.10 MIN	1.10 MIN
A249e	.250 MAX	.100 MAX		.015	.375 MIN	.375 MIN
A249f	.188 MAX	.177 MAX		.028 .030	1.10 1.25	1.10 1.25
A249h	.240 .260	.170 .250		.049 .053	1.000 MIN	1.000 MIN
A249j	.228 .267	.157 .255		.044 .052	1.141 1.220	1.141 1.220
A249k	.181	.129		.033	1.023	1.023
A249l	.255	.129		.051	1.023	1.023
A249n	.181	.177		.053	1.024	1.024

A257

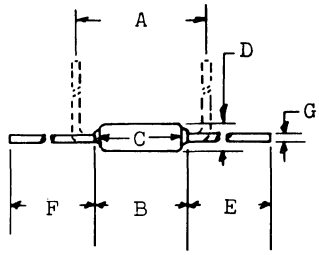

	A	B	C	D	E	F	G	CHAMFERED EDGES
A257	.200	.177 MAX		.072	.944 MIN	.944 MIN	.021 MAX	YES
A257a	.299	.250 MAX	.133 MAX	.082 MAX	1.00 MIN	1.00 MIN	.021 MAX	NO
A257b	.299 MIN		.133 MAX	.082 MAX	.100 MIN	.100 MIN	.021 MAX	YES

A265

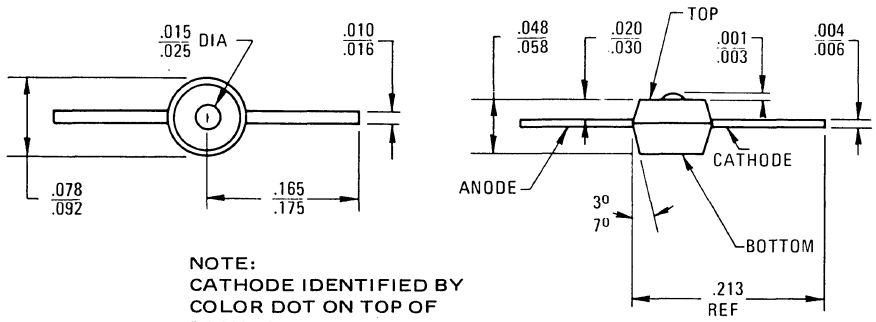

NOTE:
CATHODE IDENTIFIED BY
COLOR DOT ON TOP OF
PACKAGE

A266

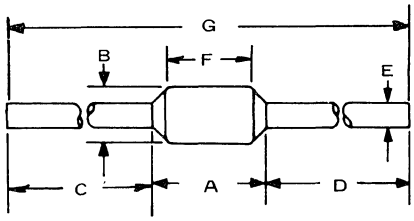

	A	B	C	D	E	F	G
A266	.170	.055	1.00 MIN	1.00 MIN	.027 .029		
A266a	.230 .330	.100 .110			.038 .040	.190 .210	2.06 2.18
A266b	.322 MAX	.196 MAX	1.06 MIN	1.06 MIN	.033 MAX	.279	2.44
A266c	.170	.090	1.00 MIN	1.00 MIN	.028 NOM		

A267

	A	B	C	D	E
A267	.740 .760	.249 .251	.249 .251	2.00 MIN	.031 .033
A267a	1.49 1.51	.249 .251	.249 .251	2.00 MIN	.031 .033
A267b	1.99 2.01	.249 .251	.249 .251	2.00 MIN	.031 .033
A267c	2.49 2.51	.249 .251	.249 .251	2.00 MIN	.031 .033
A267d	3.49 3.51	.249 .251	.249 .251	2.00 MIN	.031 .033
A267e	.650	.125	.125	.500 MIN	.018
A267f	.980 1.02	.230 .270	NA	.500 MIN	.028 .033
A267g	1.48 1.52	.230 .270	NA	.500 MIN	.028 .033
A267h	1.98 2.02	.230 .270	NA	.500 MIN	.028 .033
A267j	2.48 2.52	.230 .270	NA	.500 MIN	.028 .033
A267k	1.35 1.39	.230 .270	NA	.500 MIN	.029 .033

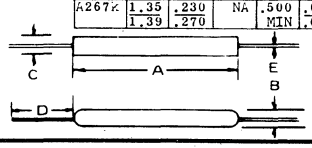

A268

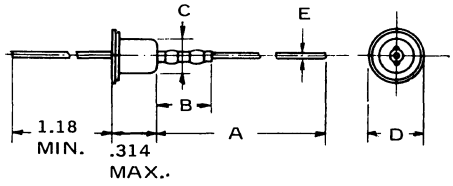

	A	B	C	D	E	CHAMFERED EDGES
A268	1.25	.314 .393	.275	.433	.035 .051	YES
A268a	1.25	.314 .393	.275	.433	.035 .051	NO
A268b	1.68	.425 .440	.334 .358	.511	.035 .051	YES
A268c	1.25 MIN	.433 MAX	.326 .366	.265	.035 .051	YES
A268d	1.65 MAX	.334 MAX	.248	.401 MAX	.035 .051	YES
A268e	1.25	.314 .433	.263 .287	.433 MAX	.039 .047	NO

15. OUTLINE DRAWINGS

A271

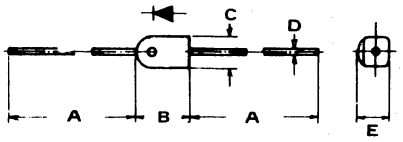

Suffix	A	B	C	D	E
A271	.984 MIN	.295 MAX	.177 MAX	.019	.196 MAX
A271a	1.10 MIN	.283 MAX	.165 MAX	.032	.177 MAX
A271b	.984 MIN	.314	.177	.023	.216
A271c	1.10 MIN	.295 MAX	.165 MAX	.031	.177 MAX
A271d	1.10 MIN	.295 MAX	.165 MAX	.022	.177 MAX
A271e	.984 MIN	.393 MAX	.196 MAX	.031	.236 MAX
A271f	.984	.216	.177	.021	.157
A271g	.510 MIN	.630 MAX	.260 MAX	.028 .034	.280 MAX

A274

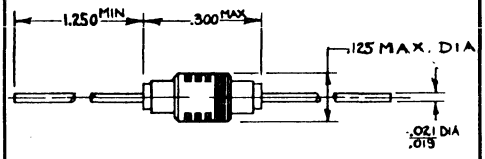

A276

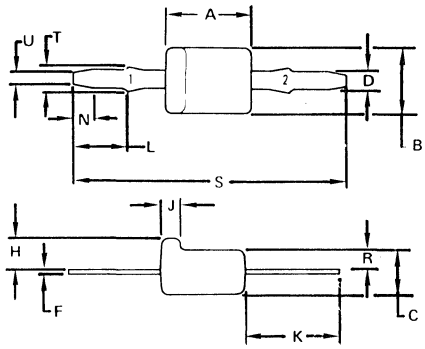

	A	B	C	D	F	H	J	K	L	N	R	S	T	U
A276	.152	.115	.075	.025	.003	.051	.025	.160	.093	.044	.031	.472	.045	.017
	.162	.125	.085	.035	.007	.061	.035	.170	.103	.054	.041	.502	.055	.027
A276a	.152	.115	.075	.025	.006	.051	.025		.093	.044	.031	.483	.045	.017
	.162	.125	.085	.035	.010	.061	.034		.103	.054	.041	.493	.055	.027

A277

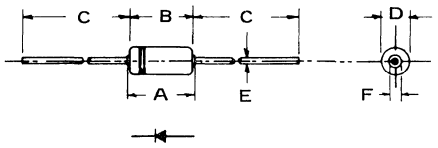

Suffix	A	B	C	D	E	F	G
A277	.181 MAX	.177 MAX	1.06 MIN	.078 MAX	.019	.030	
A277a	.177 MAX		1.00 MAX	.072 MAX	.022		
A277b	.165 MAX		.984 MAX	.078 MAX	.019		
A277c	.167 MAX		1.00 MIN	.072 MAX	.022 MAX		
A277d		.378 MAX	.984 MIN	.181 MAX	.031		
A277e		.300	.975 MIN	.250	.048 .052		
A277f		.305 MAX	.972 MIN	.205 MAX	.048 .052		
A277g	.190 MAX	.161 MAX	1.18 MIN	.083 MAX	.020	.040	
A277h	.180 MAX		1.00 MIN	.068 .078	.016 .024	.036 MAX	
A277j	.165			.074	.019		1.023
A277k		.230 MAX	1.135 MIN	.120 MAX	.030 .034		
A277m		.354	1.062	.192	.047		
A277n	.196 MAX		1.16 MIN	.140 MAX	.031		
A277p	.200 MAX		1.14 MIN	.120 MAX	.030		
A277q	.185		1.00 MIN	.086 MAX	.0145 .0155		
A277r		.197	1.06 MIN	.118 MAX	.031		
A277s	.102 MAX		1.023 MIN	.079 MAX	.0197		
A277t	.300 MAX		1.0 MIN	.103 MAX	.020 NOM		

A279

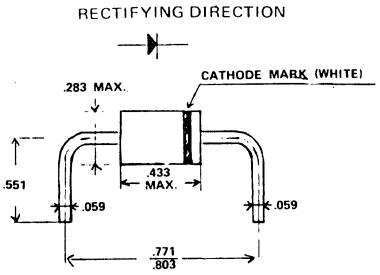

A282

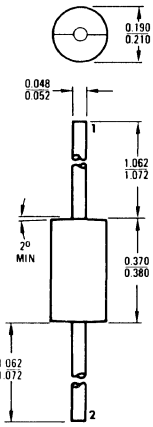

A283

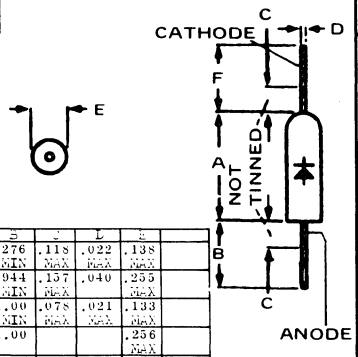

	A	S	J	L	E	
A283	.441 MAX	.276 MIN	.118 MAX	.022 MAX	.138 MAX	
A283a	.492 MAX	.944 MIN	.157 MAX	.040	.255 MAX	
A283c	.287 MAX	1.00 MIN	.078 MAX	.021 MAX	.133 MAX	
A283e	.500 MAX	1.00			.256 MAX	
A283d	.610 .669	1.20 1.31		.023	.208 .224	
A283e	.279 MAX	1.00 MIN	.078 MAX	.022 MAX	.126 MAX	1.142 MIN
A283f	.315	.984			.131	.984

A284

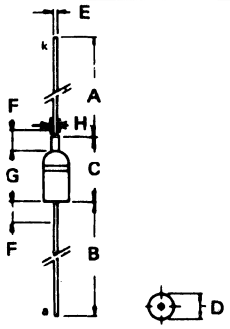

COLOR BAND INDICATES CATHODE END

	A	B	C	D	E	F	G	H	REMARKS
A284	1.00 MIN	1.00 MIN	.300 MAX	.100 MAX	.020 MAX	.079 MAX			
A284a	1.37 MIN	1.18 MIN	.590 MAX	.255 .295	.033 .045		.354 .433	.062	NO COLOR BAND

A292

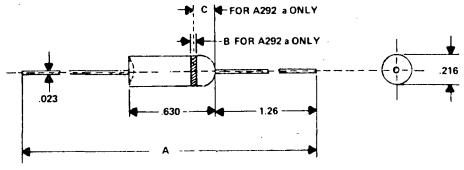

	A	B	C
A292	2.99		
A292a	3.25	.157	.027 .078

15. OUTLINE DRAWINGS

A294

	C	D	E	F	G
-294	.140 .165	.050 .062	.135 .165	.900 1.10	.035 .042
-294A	.140 .165	.030 .062	.055 .070	1.00 1.25	.019 .023
-294B	.190 .215	.030 .062	.055 .070	1.00 1.25	.019 .023
-294C	.140 .165	.030 .062	.055 .076	1.00 1.25	.029 .033
-294D	.140 .164	.030 .062	.110 .140	1.00 1.25	.027 .031
-294E	.140 .165	.030 .062	.065 .110	.900 1.10	.036 .040
-294F	.140 .165	.030 .062	.055 .070	1.000 1.250	.027 .031
-294G	.140 .165	.050 .062	.135 .165	.900 1.10	.036 .040
-294H	.140 .165	.030 .062	.065 .110	1.00 1.25	.027 .031
-294J	.250 .275	.030 .062	.055 .070	1.00 1.25	.026 .030
-294K	.190 .215	.030 .062	.055 .070	1.00 1.25	.026 .030
-294L	.140 .165	.030 .062	.085 .140	1.00 1.25	.027 .031
-294M	.140 .165	.030 .062	.135 .180	.900 1.10	.036 .040

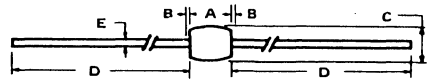

A296

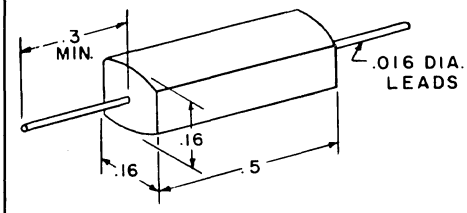

A297

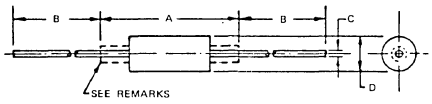

	A	B	C	D	REMARKS
A297	.195 .300	1.00 1.50	.018 .022	.078 .107	AS SHOWN
A297a	.140 .180	1.00 .150	.018 .022	.056 .075	FERRULE OPTIONAL
A297b	.080 .120	1.00 1.50	.018 .022	.050 .065	FERRULE OPTIONAL
A297c	.196 MAX	.984 MIN	.031	.118 MAX	AS SHOWN
A297d	.140 .300	1.00 1.50	.018 .022	.056 .107	AS SHOWN

A299

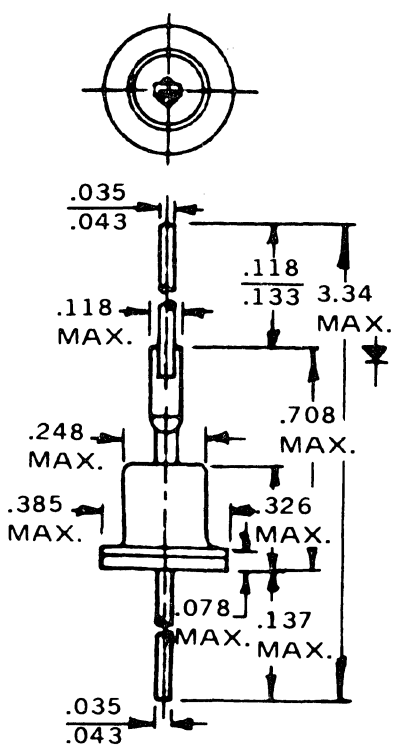

A298

	A	B	C	D	E	F	G
A298	.230 .300	1.00 1.50	.050 MAX	.085 .130	.018 .022	1.00 1.50	
A298a	.299 MAX	.984 MIN	NA	.141	.025	.984 MIN	
A298b	.140 .165	.900 1.10	.050 MAX	.135 .165	.038 .042		
A298c	.393	1.18	NA	.196	.031	1.02	
A298d	.130 .300	1.00 1.50	.050 MAX	.092 .130	.018 .022	1.00 1.50	
A298e	.150 .170	1.00 1.50	.050 MAX	.068 .076	.014 .016	1.00 1.50	
A298f	.236	1.062	NA	.102	.031	1.062	
A298g	.236	1.062	NA	.125	.031	1.062	
A298h	.140 .165	1.00 1.25	.030 MAX	.055 .077	.027 .031	1.00 1.25	
A298j	.140 .165	.900 1.10	.030 MAX	.065 .110	.036 .040	.900 1.10	
A298k	.140 .165	.900 1.10	.030 MAX	.135 .165	.036 .040	.900 1.10	
A298m	.400	.600 MIN	NA NA	.100	.020	.600 MIN	
A298n	.599 .601	.750 MIN	NA	.155 .165	.018 .022	.750 MIN	
A298p	.380		NA	.100 .107	.030 .034		2.40
A298q	.380		NA	.200	.048 .052		2.75
A298r	.185 .205	1.10 MIN	NA	.100 .107	.030 .034		
A298s	.405 .415	1.12 MIN	NA	.135 .145			
A298t	.120 MAX	1.00	NA	.070	.014 .016		
A298u		1.10	.374	.236	.055	1.10	
A298v	.235 .260	1.10 MIN	NA	.110 .120	.030 .034	1.10 MIN	
A298w	.185 .252	1.00 MIN		.100 .126	.029 .033	1.00 MIN	
298x	.167 MAX	1.00 MIN		.072 MAX	.022 MAX	1.00 MIN	
A298y	.280 .285	1.00		.133 .137	.030 .034	1.00	2.285 MAX
A298z	.236 MAX	1.06 MIN		.102 MAX	.031	1.06 MIN	
A298aa	.140 .165	1.00 1.25	.030 MAX	085 .140	.027 .031	1.00 1.25	
A298ab	.140 .165	.900 1.10	.030 MAX	.135 .180	.036 .040	.900 1.10	
A298ac	.220 .230	.730 MIN		1.088 1.092	.019 .021		
A298ad	.195 .205	1.12 MIN		.095 .105	.029 .031		
A298ae	1.48 1.52	2.00 MIN		.240 .260	.039 .041		
A298af	1.98 2.02	2.00 MIN		.240 .260	.039 .041		
A298ag	2.48 2.52	2.00 MIN		.240 .260	.039 .041		
A298ah	2.98 3.02	2.00 MIN		.240 .260	.039 .041		
A298ag	3.48 3.52	2.00 MIN		.240 .260	.039 .041		
A298ak	3.00	1.00 MIN		.250	.032	1.00 MIN	
A298am	5.00	1.00 MIN		.250	.032	1.00 MIN	
A298an	.365 .375	.810 .815	.100 TYP	.295 .305	.048 .050		1.995 2.005
A298ap	.250 MAX			.160 MAX	.032 TYP		.250 MIN
A298an	.130 .300	1.00 1.50	.050 MAX	.055 .130	.018 .023	1.00 1.50	
A298ar	.360 .375	1.10 MIN		.190 .205	.038 .042	1.10 MIN	
A298as	.240 .260	.40 MIN		.190 .210	.057 .063	.40 MIN	
A298at	.240 .260	.40 MIN		.123 .127	.028 .032	.40 MIN	

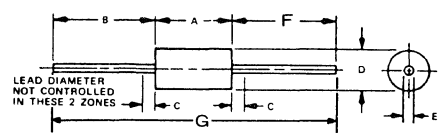

15. OUTLINE DRAWINGS

A305

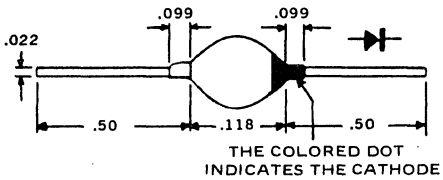

A308

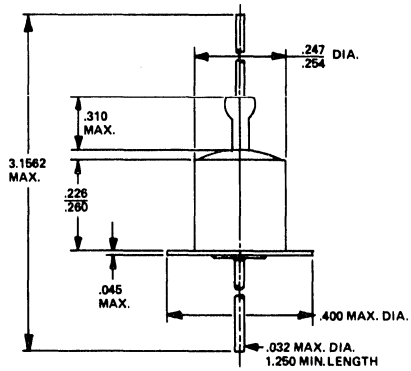

A310

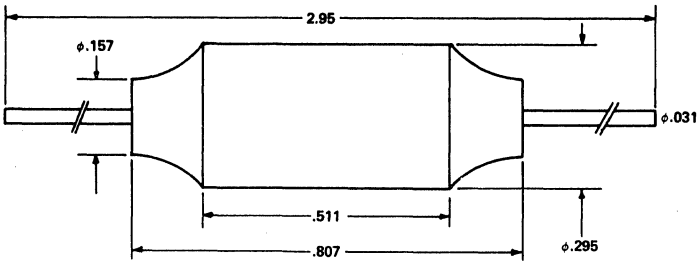

A311

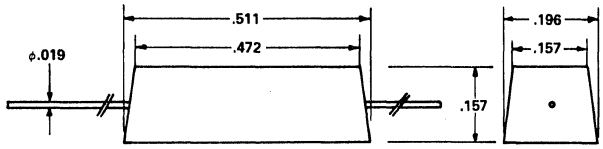

A312

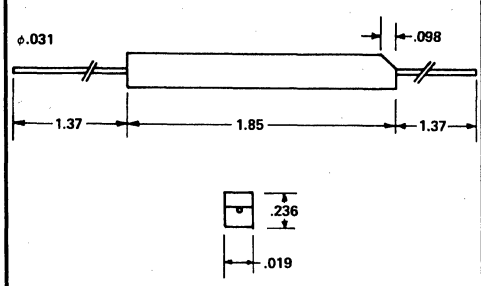

A313

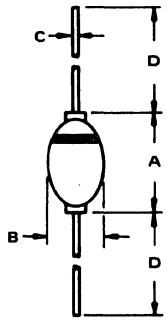

Suffix	A	B	C	D
A313	.180 MAX	.100 / .150	.029 / .035	1.13 MIN
A313a	.240 / .260	.170 / .260	.048 / .062	1.10 MIN
A313b	.240	.100 / .150	.036	1.13
A313c	.225	.100 / .150	.029 / .036	1.13
A313d	.200	.100 / .150	.028 / .034	1.00 MIN
A313e	.240 MAX	.100 / .150	.028 / .022	1.00 MIN
A313f	.130 / .300	.080 / .130	.018 / .023	1.00 MIN
A313g	.275 MAX	.061 / .098	.023	1.10 MIN
A313h	.472 MAX	.069 / .118	.023	1.10 MIN
A313j	.180 TYP	.150 MAX	.034 MAX	1.10 MIN
A313k	.250 TYP	.250 MAX	.063 MAX	1.10 MIN
A313l	.236	.177	.047	1.10 MIN
A313n	.130 / .300	.190 / .115	.042 / .037	1.00 MIN
A313p	.425 MAX	.30 MAX	.047 / .053	1.0 MIN

A314

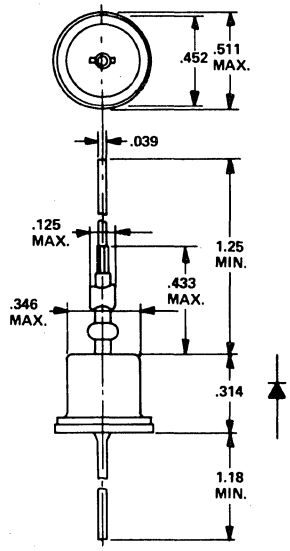

A318

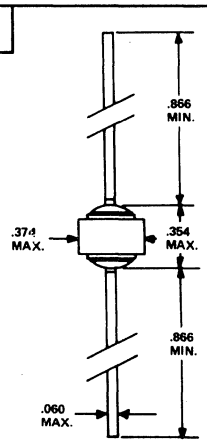

15. OUTLINE DRAWINGS

A321

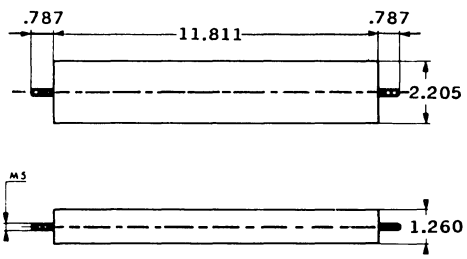

A329

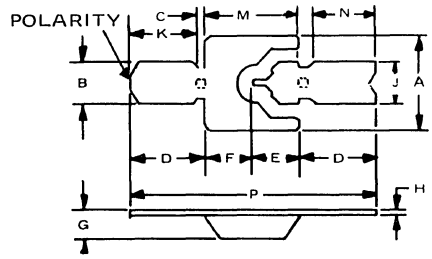

	A	B	C	D	E	F	G	H	J	K	M	N	P	POLARITY
A329	.007 .009						.003 .004	.0003 .0005	.004 .005	.007 .008	.008 .010	.007 .008	.026 .028	Cathode
A329a	.010 .012	.0045 .0055	.001	.0085 .0095	.005 .006	.005 .006	.0025 .0035	.0003 .0005					.027 .031	Cathode
A329b	.010 .012	.0045 .0055	.001	.0085 .0095	.005 .006	.005 .006	.0025 .0035	.0003 .0003					.027 .031	Anode

A330

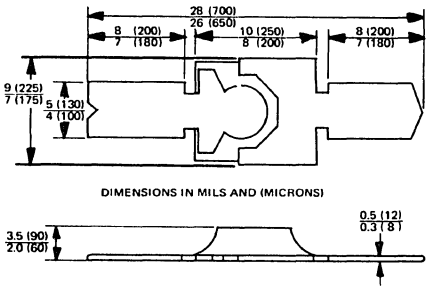

A331

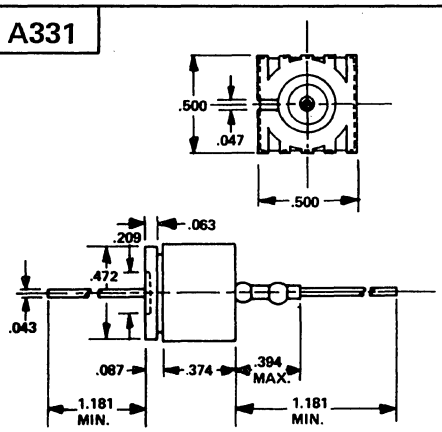

A337

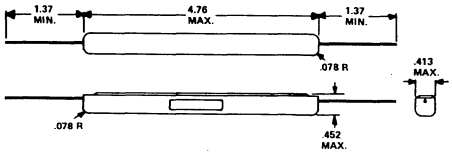

A334

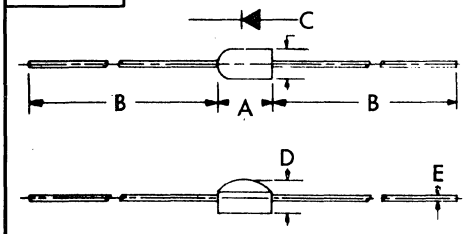

	A	B	C	D	E
A334	.295 MAX	1.10 MIN	.165 MAX	.177 MAX	.031
A334a	.350 MAX	.750 MIN	.170 MAX	.200 MAX	.017 .023
A334b	.450 MAX	.750 MIN	.200 MAX	.200 MAX	.017 .023
A334c	.600 MAX	.750 MIN	.210 MAX	.220 MAX	.017 .023

A333

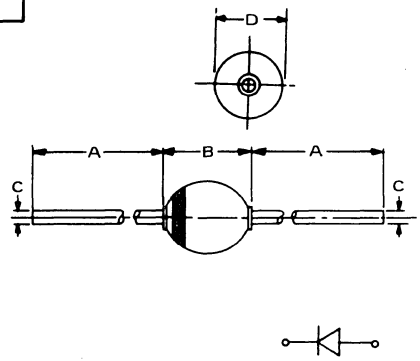

	A	B	C	D
A333	1.14 MAX	.196 MAX	.031	.157 MAX
A333a	1.141	.275 MAX	.051	.216 MAX
A333b	1.10 MIN	.275 MAX	.047	.197 MAX
A333c	1.102 MIN	.179 MAX	.035 MAX	.149 MAX
A333d	1.102 MIN	.196 MAX	.053 MAX	.177 MAX
A333e	1.00 MIN	.130 .300	.037 .042	.115 .180
A333f	1.02 MIN	.295 MAX	.053 MAX	.177 MAX
A333g	.40 MIN	.30	.060	.30 MAX
A333j	1.00 MIN	.125 .180	.028 .032	.100 .150
A333k	1.00 1.10	2.40 .260	.048 .052	.170 .250
A333l	1.0 MIN	.300 MAX	.042 MAX	.230 MAX

A340

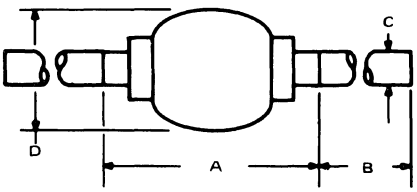

	A	B	C	D
A340	.140 .250	1.00 MIN	.027 .035	.080 .150
A340a	.150 .300	1.00 MIN	.037 .042	.115 .180
A340b	.150 .300	1.00 MIN	.027 .035	.115 .155
A340c	.130 .250	1.00 1.30	.026 .033	.065 .120

A319

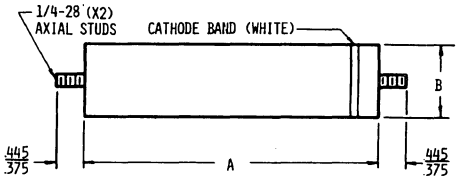

	DIMENSIONS (IN INCHES)			
	A		B	
	MINIMUM	MAXIMUM	MINIMUM	MAXIMUM
A319	4.70	4.85	1.05	1.25
A319a	6.50	6.65	1.05	1.25
A319b	8.00	8.25	1.05	1.25
A319c	9.00	9.25	1.48	1.65
A319d	9.00	9.25	1.48	1.65
A319e	9.50	9.75	1.60	1.85
A319f	9.50	9.75	1.90	2.20
A319g	14.00	14.25	1.90	2.20

15. OUTLINE DRAWINGS

A344

Suffix	A	B	C	D	E	Remarks
A344	1.375 1.500	.350 .390	1.375 1.500	.028 .032	.120 .130	
A344a	.400 MIN	.360 .390	.400 MIN	.090 .096	.485 .515	
A344b	.400 MIN	.385 .415	.400 MIN	.037 .043	.285 .315	
A344d	1.00 1.25	.420 MAX	1.00 1.25	.180 MAX	.027 .031	
A344e	1.00 MIN	1.00		.032	.250	
A344g	.787	.472	.787	.019	.118	
A344h	1.07 1.24	.275 .291	1.07 1.24	.028 .032	.149 .165	
A344i	1.07 1.10	.280 .291	1.07 1.10	.029 .033	.150 .165	Chamfered Edges
A344k	.944 MIN	.295 MAX	.944 MIN	.055 MAX	.188 MAX	
A344l	1.07 1.10	.280 .291	1.07 1.10	.037 .041	.150 .165	
A344m	.708 .866	.078 .110typ	.708 .866	.009 .013	.039 .047typ	Chamfered Edges
A344o	.500 MIN	.625	.500 MIN	.025	.200	
A344p	1.023 1.181	.291 .295typ	1.023 1.181	.015 .023	.098 MAX	
A344q	.984	.350	.984	.031	.125	Chamfered Edges
A344r	1.023 MIN	.238 .250	1.023 MIN	.029 .034	.116 .120	
A344u		.625		.020	.200	
A344v		.750		.020	.200	
A344x		1.000		.031 .033	.250	
A344y		1.500		.031 .033	.250	
A344z		2.000		.031 .033	.250	
A344aa	.945 MIN	.590	.946 MIN	.027	.158	
A344ab	.945 MIN	.394	.945 MIN	.027	.119	
A344ac	1.04	.374	1.04	.045 .049	.197	
A344ad	1.04	.374	1.04	.031	.197	
A344ae	.945	.394	.945	.071	.295	

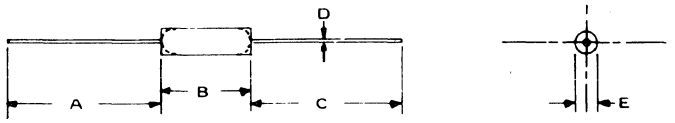

A347

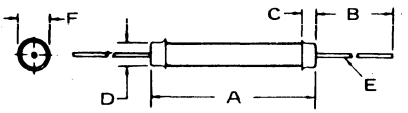

	A	B	C	D	E	F
A347	2.13	1.38	.160	.280	.031	.290
A347a	2.33	1.38	.160	.280	.031	.290

A352

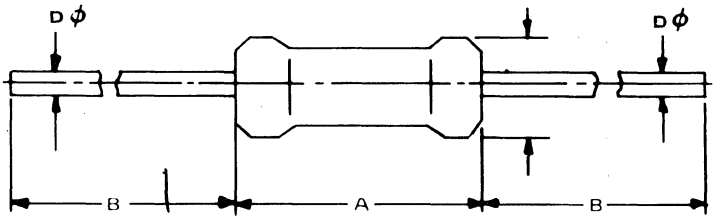

	A	B	C	D
A352	.291 .295typ	1.023 1.181	.094 .118typ	.017 .021
A352a	.196 MAX	.866 1.102	.098 MAX	.015 .023

A355

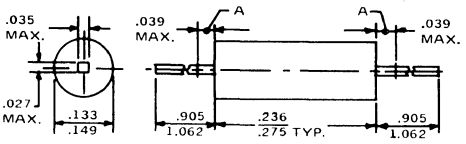

A356

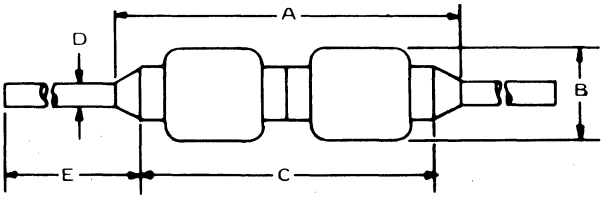

	A	B	C	D	E
A356	.475 MAX	.104 MAX	.300 TYP	.027 .029	.975 MIN
A356a	.450 MAX	.085 MAX	.275 TYP	.027 .029	.700 MIN
A356b	.500 MAX	.145 MAX	.325 TYP	.039 .041	.975 MIN
A356c	.600 MAX	.185 MAX	.430 TYP	.039 .041	.925 MIN

15. OUTLINE DRAWINGS

A359

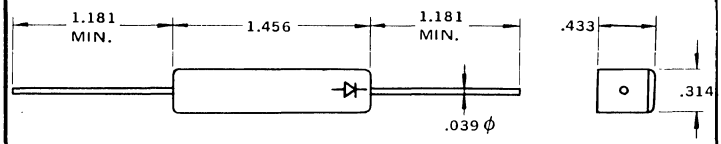

A360

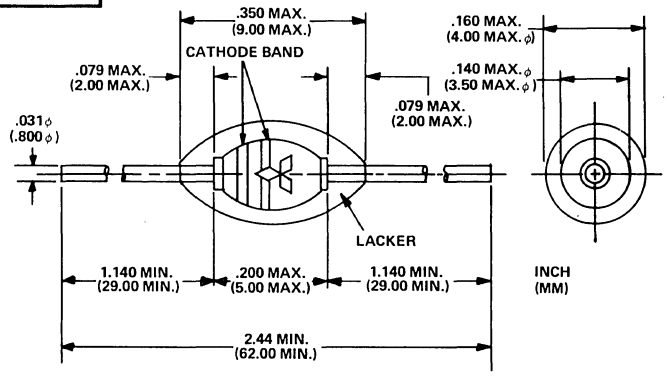

A363

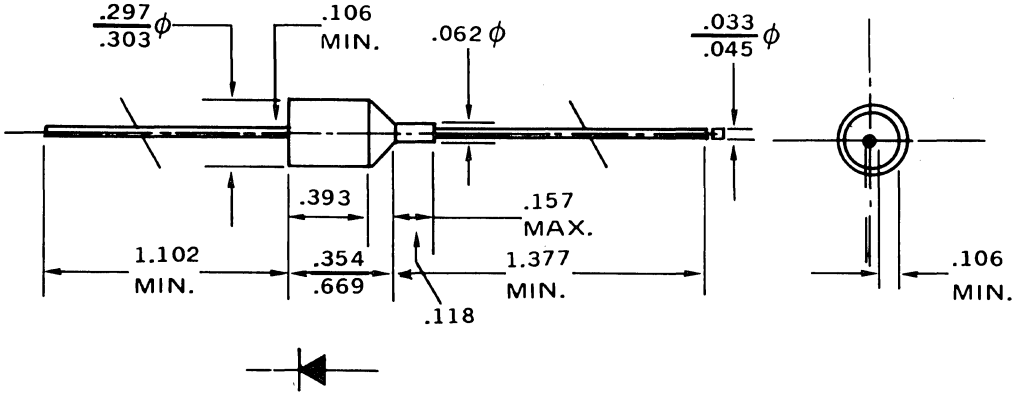

A364

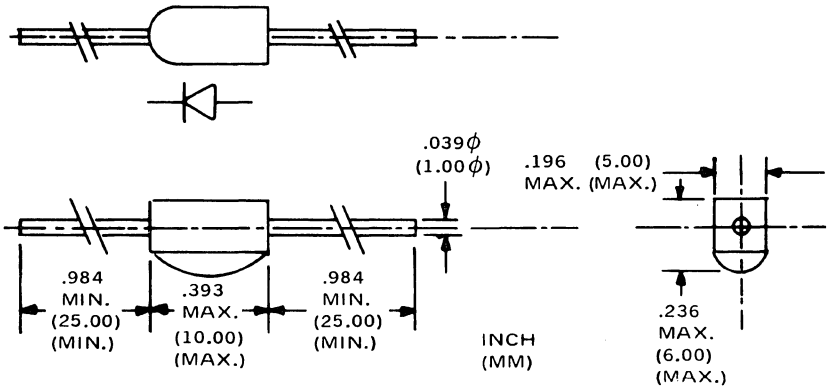

A372

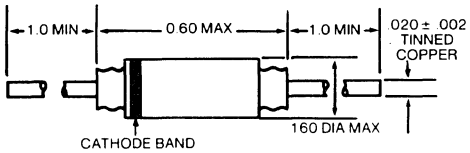

15. OUTLINE DRAWINGS

A374

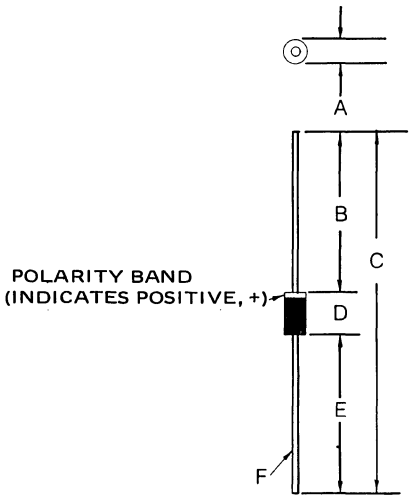

	A	B	C	D	E	F
A374	.160	1.00	2.25	.250	1.00	.030 DIA
A374a	.110	.984		.196	.984	.025 DIA

A377

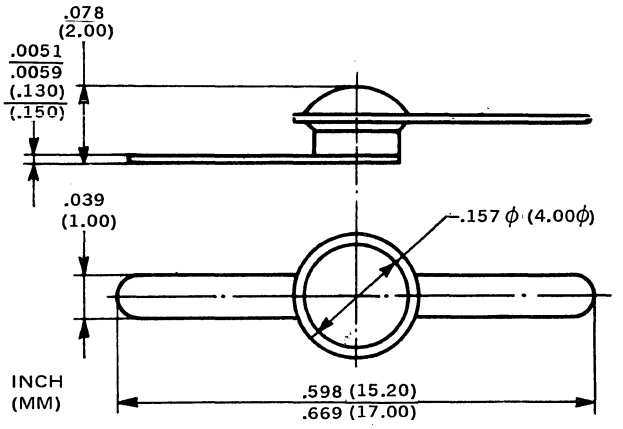

A378

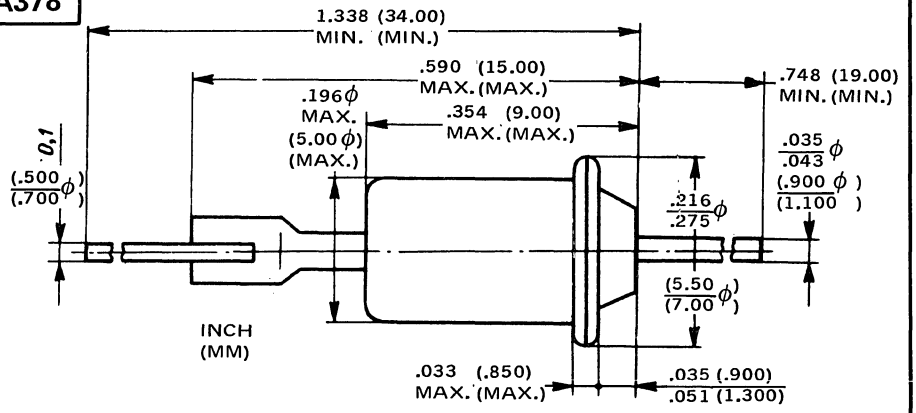

A380

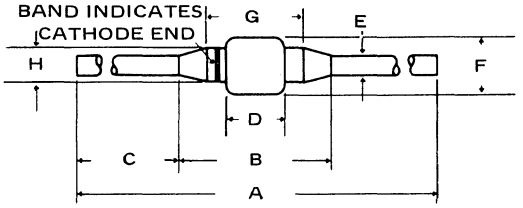

	A	B	C	D	E	F	G	H
A380	1.625 MIN	.250 MAX	.700 MIN	.085 TYP	.027 .029	.085 MAX	.155 TYP	.055 TYP
A380a	2.30 MIN	.300 MAX	.975 MIN	.105 TYP	.039 .041	.145 MAX	.175 TYP	.115 TYP
A380b	2.28	.280	1.00 MIN		.040 NOM	.150		
A380c	2.35 MIN	.400 MAX	.925 MIN	.105 TYP	.040	.185 MAX	.230 TYP	.135 TYP
A380d	2.14 MIN	.102 MAX	1.02 MIN	.090 TYP	.019	.078 MIN		.039 TYP

A382

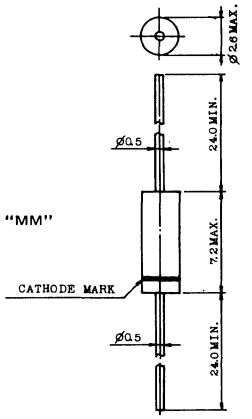

A383

	MILLIMETERS		INCHES	
DIM	MIN	MAX	MIN	MAX
A	5.97	6.60	0.235	0.260
B	2.79	3.05	0.110	0.120
D	0.76	0.86	0.030	0.034
K	27.94	–	1.100	–

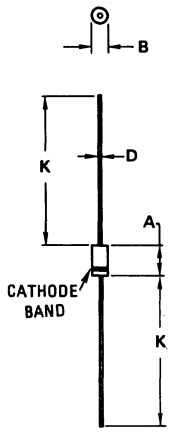

A386

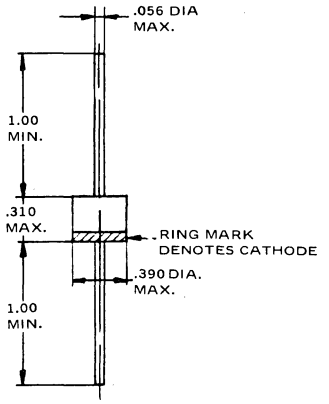

15. OUTLINE DRAWINGS

A387

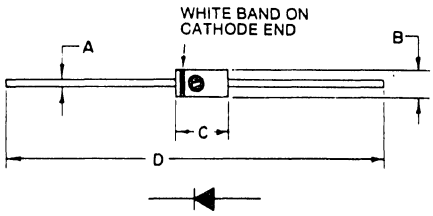

LTR.	INCHES	MILLIMETERS
A	.030-.034 Dia.	.76-.86 Dia.
B	.10-.107 Dia.	2.54-2.72 Dia.
C	.185-.205	4.70-5.21
D	2.40	60.96

A388

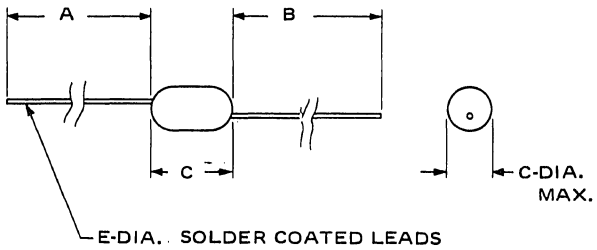

	A	B	C	D	E
A388	1.21 MIN	1.21 MIN	.375 MAX	.200 DIA MAX	.027
A388a	1.21 MIN	1.21 MIN	.375 MAX	.260 DIA MAX	.027

A389

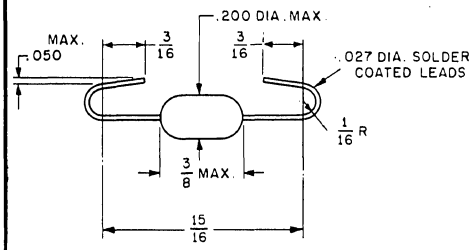

NOTE: MAXIMUM LEAD SKEW .040

A390

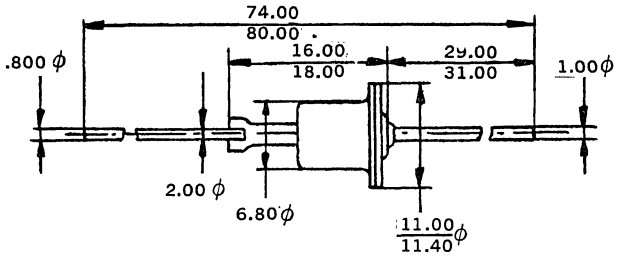

DIMENSIONS IN "MM"

A391

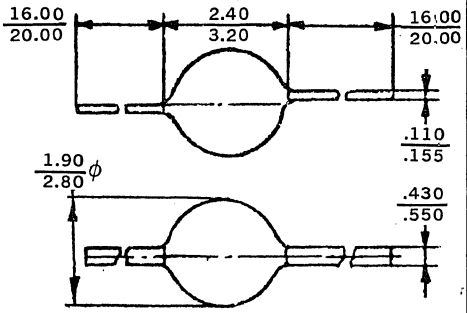

DIMENSIONS IN MM

A392

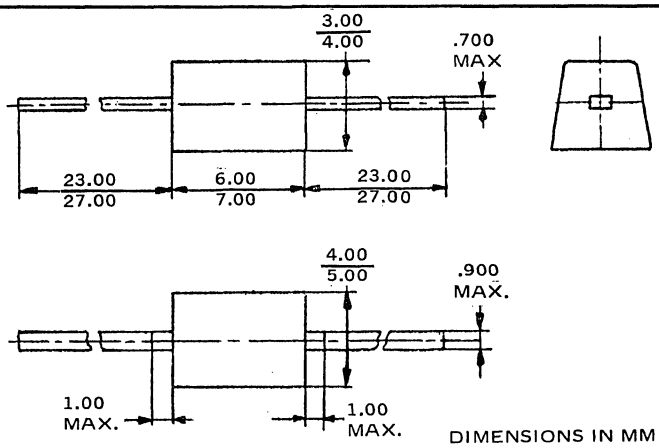

DIMENSIONS IN MM

A393

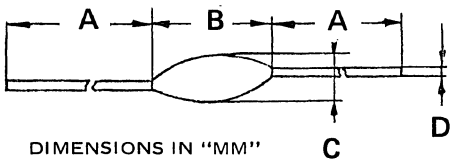

DIMENSIONS IN "MM"

Suffix	A	B	C	D
A393	16.0 / 20.0	2.0 / 3.0	1.0 / 2.0	.107 / .155
A393a	30.2	9.14	3.43	0.6
A393b	32.5 MIN	4.90	3.00	.650
A393c	28.0 MIN	4.57 MAX	3.81 MAX	.810
A393d	28.0 MIN	5.00 MAX	4.50 MAX	1.35 MAX
A393e	28.0 MIN	11.0 MAX	3.00 MAX	.650 MAX

A394

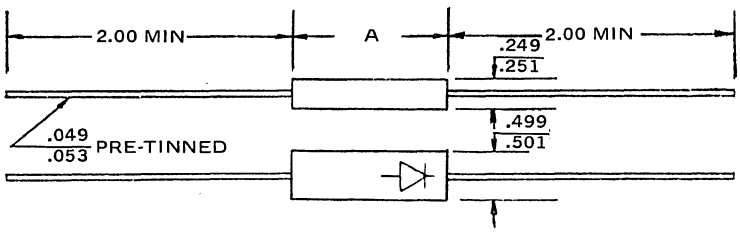

	A
A394	1.11 / 1.13
A394a	1.61 / 1.63
A394b	1.99 / 2.01
A394c	2.36 / 2.38
A394d	2.74 / 2.76
A394e	3.49 / 3.51
A394f	4.24 / 4.26

DIMENSIONS IN MM

15. OUTLINE DRAWINGS

A395

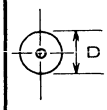

Suffix	A	B	C	D
A395	28	7.0	.79	4.0
A395a	24	5.0	.60	2.7
A395b	24	7.5	1.0	4.8
A395c	28.0 MIN	4.0 MAX	0.5	2.0 MAX

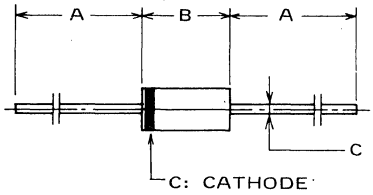

DIMENSIONS IN "MM"

A397

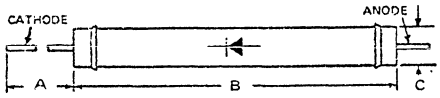

	A	B	C
A397	.980 MIN	1.800	.240
A397a	1.500 MIN	2.343	.296

A398

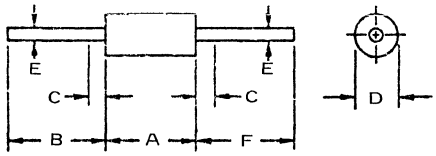

Suffix	A	B	C	D	E	F
A398	.120 / .300	1.000 / 1.500	.050 MAX	.060 / .107	.018 / .022	1.000 / 1.500
A398a	.300 MAX	1.000 / 1.500	.050 MAX	.107 MAX	.018 / .022	1.000 / 1.500
A398b	.724 MAX	.511 MIN		.165 MAX	.022 MAX	.511 MIN
A398c	.160 / .205	1.000 MIN	.050 MAX	.080 / .128	.028 / .034	1.000 MIN
A398e	.120 / .300	1.000 / 1.500	.050 MAX	.060 / .107	.018 / .022	1.000 / 1.500
A398f	.315 / .335	1.000 MIN		.165 / .180	.037 / .043	1.000 MIN
A398g	.360 / .375			.190 / .205	.029 / .033	1.100 MIN
A398h	.130 / .300	1.000 / 1.500	.050 MAX	.055 / .130	.018 / .023	1.000 / 1.500
A398i	.120 / .150	1.0 / 1.5	.050 MAX	.055 / .080	.018 / .022	1.0 / 1.5
A398j	.340 / .360	1.00 MIN	N/A	.340 / .360	.048 / .052	1.00 MIN
A398k	.385 MAX	1.02 MIN	N/A	.200 MAX	.041 MAX	1.02 MIN
A398m	.238 / .250	1.024 MIN	N/A	.116 / .120	.029 / .034	1.024 MIN
A398n	.350 MAX	1.00 MIN	0.049 MAX	.145 MAX	.043 MAX	1.00 MIN
A398p	.170 MAX	1.00 MIN	N/A	.085 MAX	.027 / .029	1.00 MIN
A398q	.200 MAX	1.00 MIN	N/A	.145 MAX	.039 / .041	1.00 MIN

A403

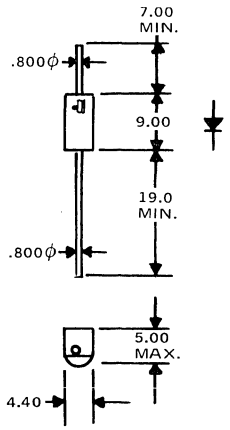

DIMENSIONS IN "MM"

A404

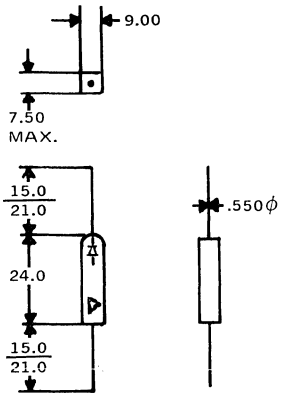

DIMENSIONS IN "MM"

A405

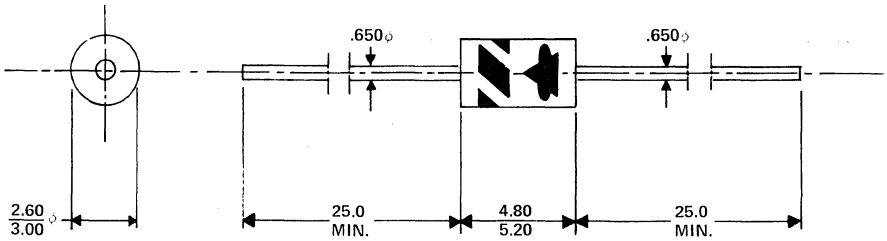

DIMENSIONS IN "MM"

A407

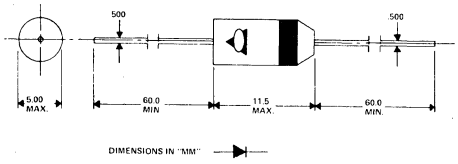

A408

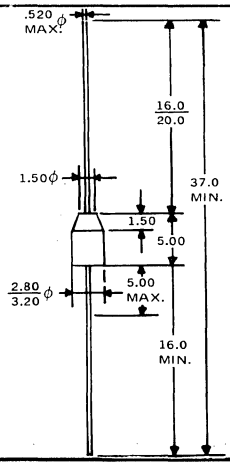

A409

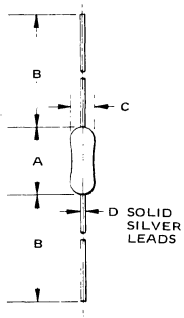

	A	B	C	D
A409	.300 MAX	1.00 MIN	.120 MAX	.020 MIN
A409a	.400 MAX	1.00 MIN	.120 MAX	.020 MIN
A409b	.475 MAX	1.00 MIN	.120 MAX	.020 MIN
A409c	.400 MAX	1.00 MIN	.120 MAX	.029 MIN
A409d	.450 MAX	1.00 MIN	.120 MAX	.029 MIN
A409e	.300 MAX	1.00 MIN	.120 MAX	.026 -.0/0
A409f	.400 MAX	1.00 MIN	.120 MAX	.026 .030
A409g	.450 MAX	1.00 MIN	.160 MAX	.026 .030
A409h	.450 MAX	.625 MIN	.160 MAX	.027 .031

15. OUTLINE DRAWINGS

A411

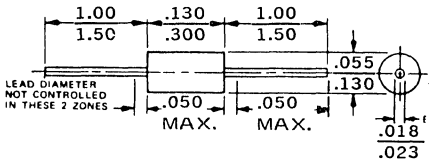

A412

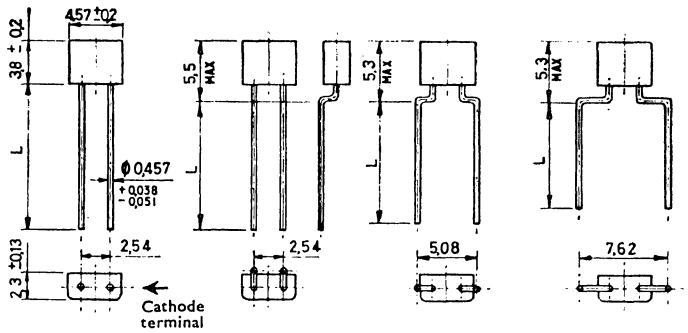

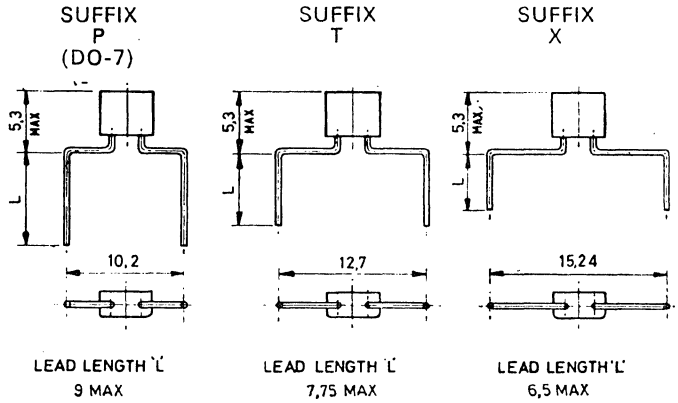

A416

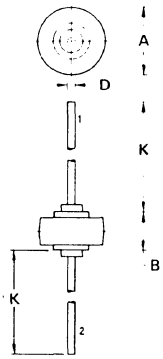

Suffix	A416	A416a	A416b
A	10.0	8.5	10.0
B	6.3	6.0	6.3
D	1.3	1.3	1.3
K	25.4	25.4	25.4

Dimension in "mm"

A421

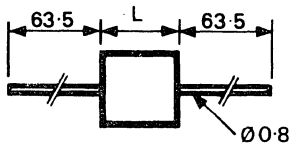

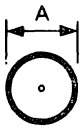

	A	L
A421	14.7	35.1
A421a	14.7	40.9
A421b	14.7	46.8
A421c	14.7	52.9

A422

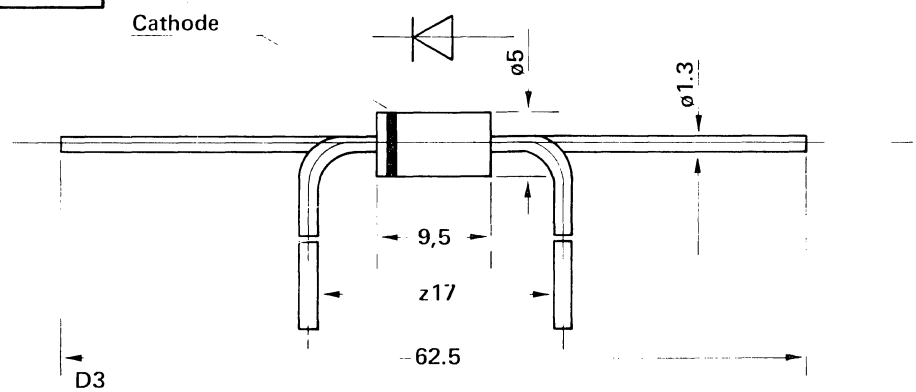

A423

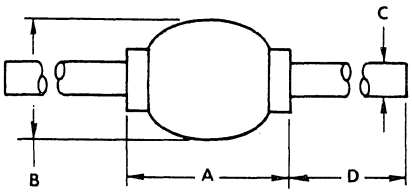

	A	B	C	D
A423	60 .300	.140 .225	.056 .068	.90 1.30
A423a	.300	.230	.053	1.0

15. OUTLINE DRAWINGS

A424

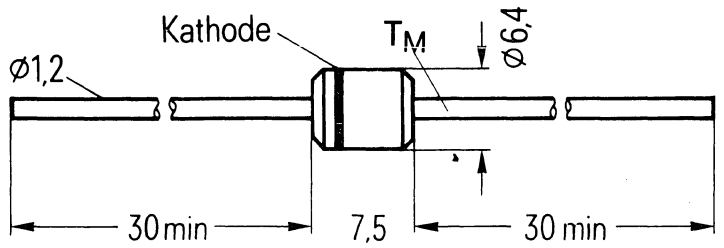

A425

Suffix	in.	mm
A425	.433	11
A425a	.551	14

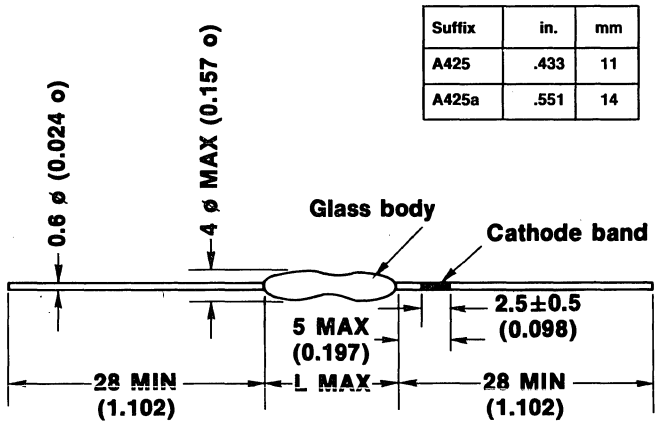

A426

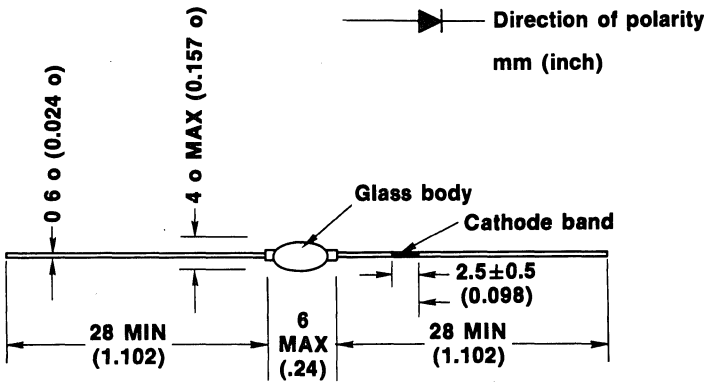

A427

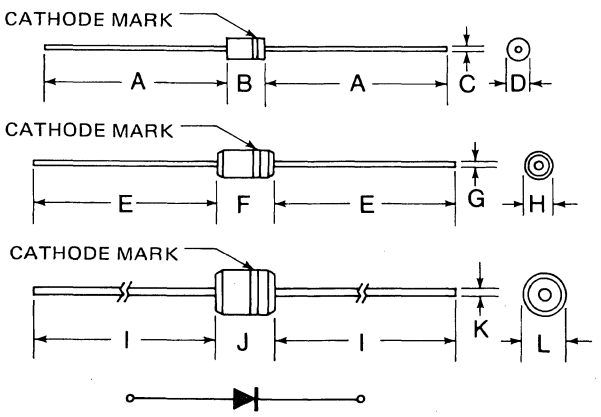

DIM.	INCHES	MILLIMETERS
A	1.00 MIN	25.40 MIN
B	0.196	4.98
C	0.024 D.	0.61 D.
D	0.118 D.	3.00 D.
E	1.000 MIN	25.40 MIN
F	0.295	7.49
G	0.032 D.	0.81D.
H	0.158 D.	4.01 D.
I	1.82 MIN	30.02 MIN
J	0.295	7.49
K	0.048 D.	1.22 D.
L	0.252 D.	6.40 D.

15. OUTLINE DRAWINGS

A428

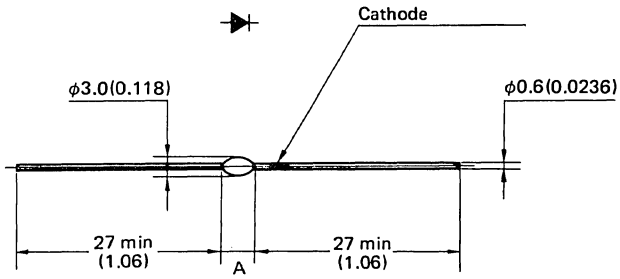

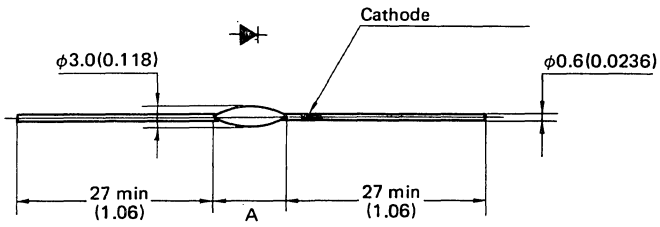

Suffix	A
A428	.236
A428a	.256
A428b	.295
A428c	.315
A428d	354
A428e	.413
A428f	.472

A430

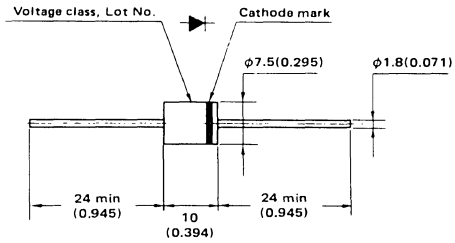

A431

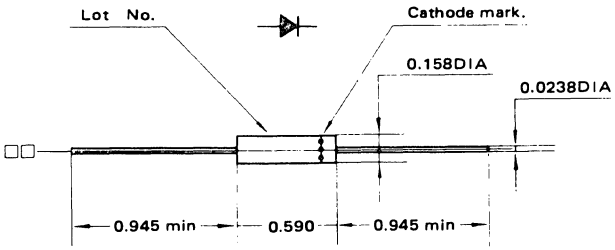

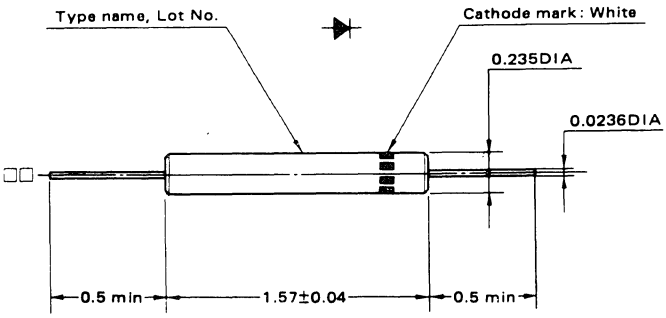

A432

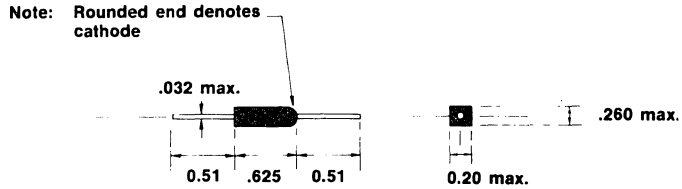

A433

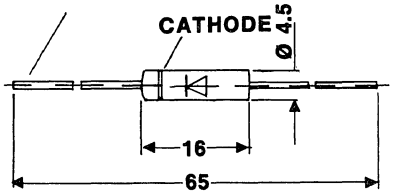

15. OUTLINE DRAWINGS

A435

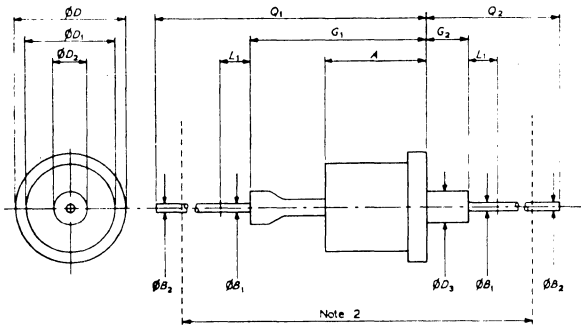

The millimetre dimensions are derived from the original inch dimensions

Ref.	Dimensions							Notes
	Millimetres			Degrees	Inches			
	Min	Nom.	Max.	Nom.	Min.	Nom.	Max.	
A	[illegible]		[illegible]		[illegible]		[illegible]	
øB1								1
øB2	[illegible]		[illegible]		[illegible]		[illegible]	
øD	[illegible]		[illegible]		[illegible]		[illegible]	
øD1	[illegible]		[illegible]		[illegible]		[illegible]	
øD2			[illegible]				[illegible]	
øD3			[illegible]				[illegible]	
G1			[illegible]				[illegible]	
G2			[illegible]				[illegible]	
L1			[illegible]				[illegible]	1
Q1	[illegible]		[illegible]		[illegible]		[illegible]	
Q2	[illegible]		[illegible]		[illegible]		[illegible]	

A437

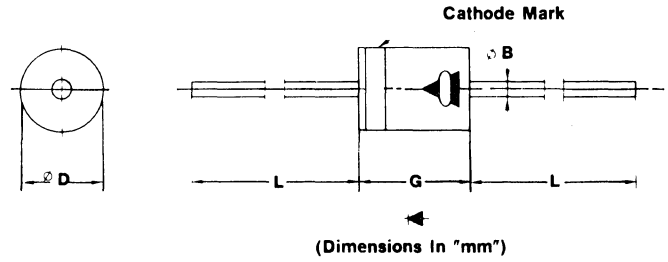

(Dimensions In "mm")

VRM	Color Code
200V	Blue
400V	Red
600V	Yellow
800V	Pink
1000V	Green
1200V	White
1500V	Silver

Model	L	G	øB	øD
A437	20 Min	5.0 Max	0.65	2.8
A437a	20 Min	7.8 Max	0.8	4.6 Max
A437b	25 Min	7.5 Max	1.4	5.2

A439

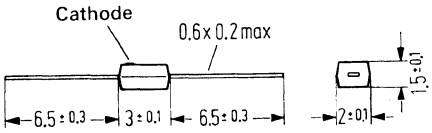

A440

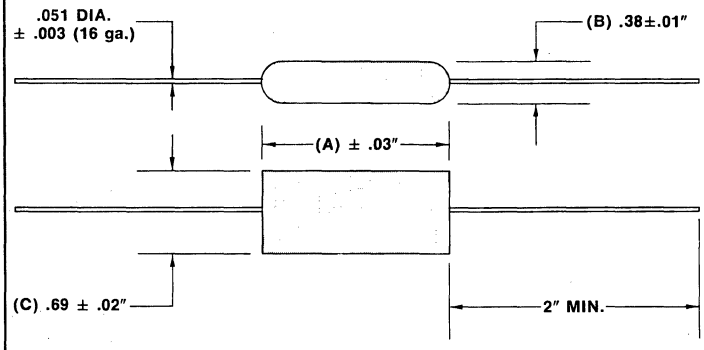

	A
A440	1.5
A440a	2.5
A440b	3.5
A440c	4.5
A440d	5.5
A440e	6.5

A441

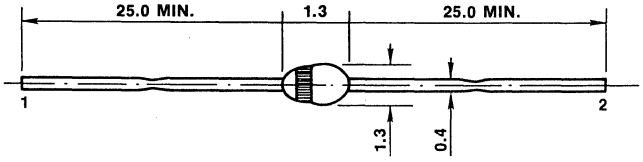

15. OUTLINE DRAWINGS

A446

Dimensions in mm

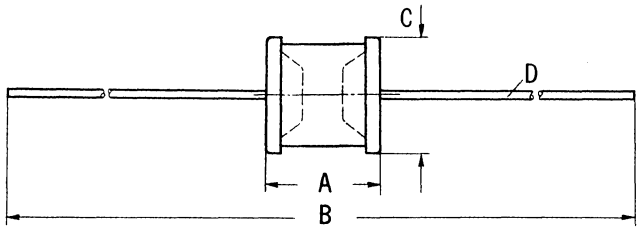

	A	B	C	D
A446a	7.9/8.5	44.5/50.5	8.9/9.1	0.8
A446b	10.5/11.5	47/53	8.9/9.1	0.8
A446c	10/11	44.5/50.5	8.9/9.1	0.8
A446d	10.5/11.5	44.5/50.5	8.9/9.1	0.8
A446e	5.7/7.3	44/50	8.9/9.1	0.8
A446f	6.5/7.5	44/50	8.9/9.1	0.8
A446g	7.2/7.8	44/50	8.9/9.1	0.8
A446h	7.7/8.3	44/50	8.9/9.1	0.8
A446i	5.9/6.2	44/50	7.7/8.1	1.0
A446j	7.6/8.2	44/50	7.6/8.2	1.0
A446k	6.7/7.3	45/51	8.9/9.1	0.8
A446m	8.1/8.7	45/51	8.9/9.1	0.8

A448

Dimensions in mm

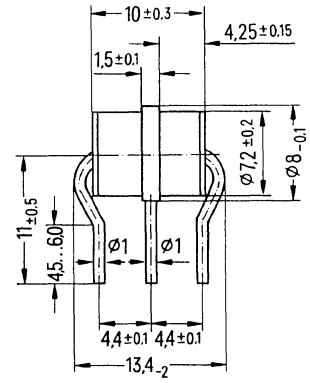

A447

Dimensions in mm

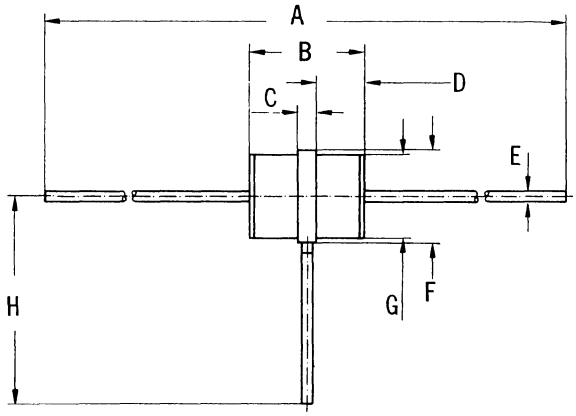

	A	B	C	D	E	F	G	H
A447a	44/50	7.0/13.0	1.4/1.6	4.1/4.4	1.0	7.9/8.1	7.1/7.3	17/18
A447b	72/78	11.1/11.9	1.4/1.6	4.8/5.2	1.0	9.4/9.6	8.1/8.5	38.3/38.7

A449

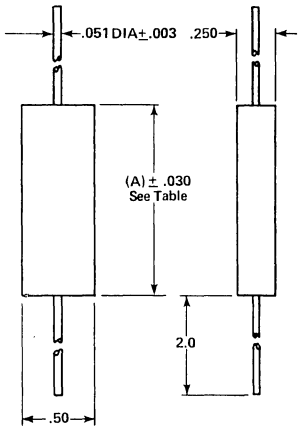

	A
A449	1.125
A449a	1.625
A449b	2.000
A449c	2.375
A449d	2.750
A449e	3.500
A449f	4.250

A452

	A
A452	1.5
A452a	2.5
A452b	3.5
A452c	4.5
A452d	5.5

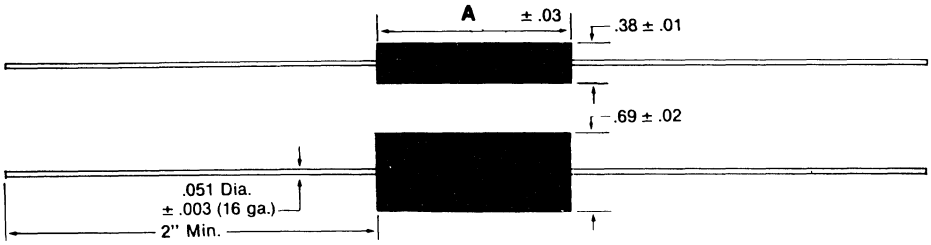

A450

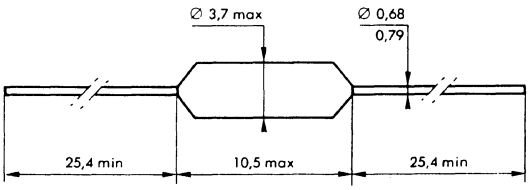

Marking : type number, black band indicates cathode.

A453

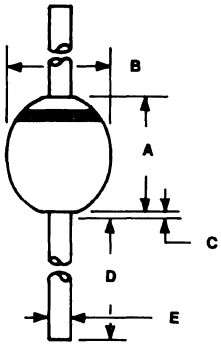

	A	B	C	D	E
A453	4.57 max	3.81 max	1.27 max	25.4 min	.889 max
A453a	7.62 max	5.84 max	1.27 max	25.4 min	1.07 max

15. OUTLINE DRAWINGS

A442

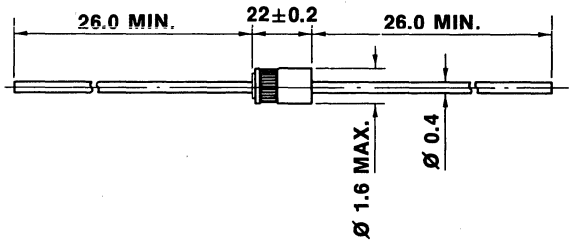

A443

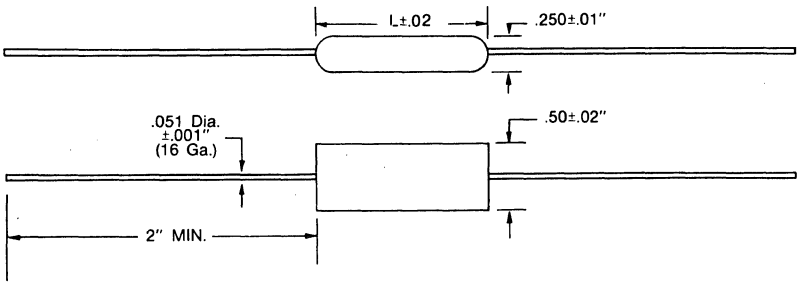

	CASE LENGTH
A443	1.125
A443a	2.00
A443b	2.75
A443c	3.50
A443d	4.25
A443e	1.625
A443f	2.375

A444

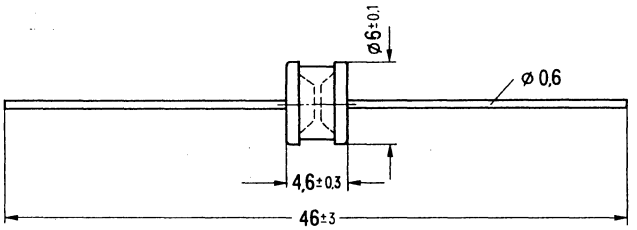

A445

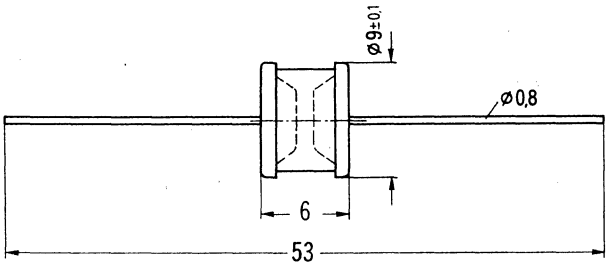

15. OUTLINE DRAWINGS

C1

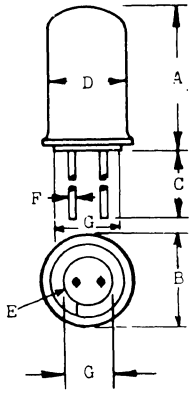

	A	B	C	D	E	F	G
C1	.350 .370	.210 .230	1.125	.180 .200	.045 .055	.019 .021	NA
C1a	.334	.246	1.58		.070	.018	NA
C1aa	.310	.255	1.50	.229	.100	.018	NA
C1ab	.591 MAX	.204 MAX	1.45 MIN	.204 MAX	.083	.017	NA
C1c	.618 MAX	.220 .232	1.45 MIN	.220 .232	.083	.017	NA
C1d	.386	.232	1.57 MIN	.232	.063	.017	NA
C1e	.430	.270	1.20 MIN	.270	.063	.017	NA
C1f	.433	.252	1.25	.236	.055	.020	.138
C1g	.406	.252	1.10	.236	.071	.020	.157
C1h	.437	.219	1.062			.020	

C3

Suffix	A	B	C	D	E	F	G	H	J	K
C3	.220 MAX	1.50 MIN	.140 MAX	.210 MAX	.086	.043				
C3c	.423 .443	1.500 1.562	.307 .317	.715 .725	.478 .494		.025 .030	.055 .075	.745 .757	.340 .350
C3d	.816 .836	1.500 1.562	.307 .317	.715 .725	.478 .494		.025 .030	.055 .075	.745 .757	.340 .350
C3e	.255 MAX	1.00 MIN			.080		.016		.265 MAX	.155 MAX
C3g	.748	.984	.314		.500		.031		.728	
C3h	.354 .433	1.49 1.56		.714 .725	.477 .494		.025 .029	.055 .074	.744 .757	.340 .349
C3j		1.49 1.56		.714 .725	.477 .494		.025 .029	.055 .074	.744 .757	.340 .349
C3k	.190 .220	1.50 MIN	.115 .140	.185 .210	.076 .096		.016 .019			

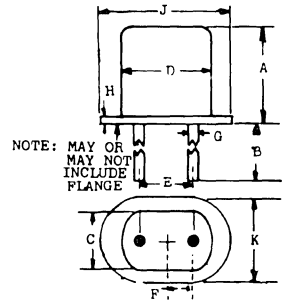

C5a

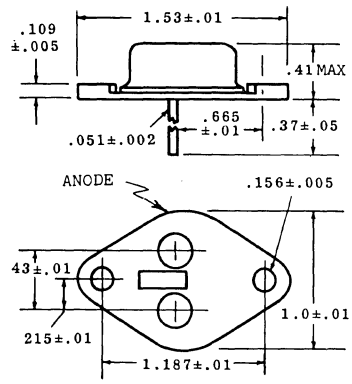

C7

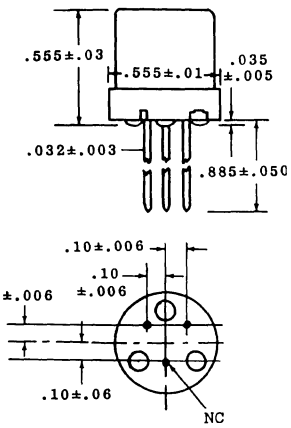

C8

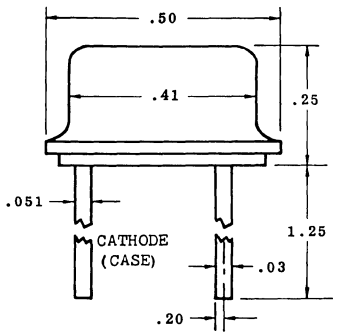

C9

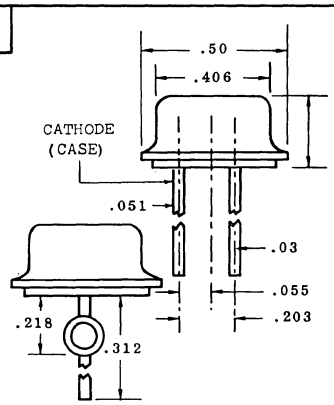

C12

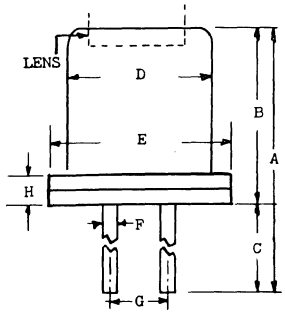

	A	B	C	D	E	F	G	H	LENS
C12		.426 MAX	.880 1.000	.338 MAX	.417 MAX	.039 .043	.115 .135	.047 MAX	NO
C12a	1.50 MAX	.350 MAX	1.00 MIN	.200 MAX	.225 MAX	.020	.050		NO

C13

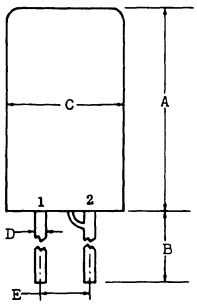

	A	B	C	D	E	1	2
C13	.430 MAX	1.46 MIN	.240 MAX	.058	.072		
C13a	.218 MAX	1.18 MIN	.154 MAX	.012	.051	A	C

C14

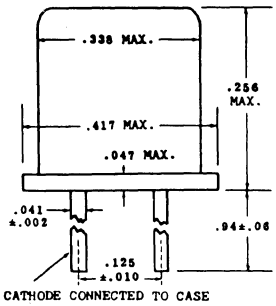

15. OUTLINE DRAWINGS

C15

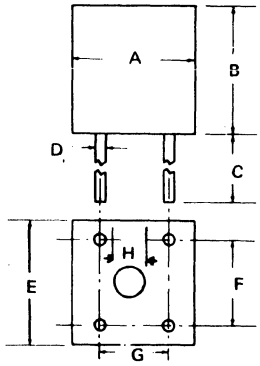

	A	B	C	D	E	F	G	H
C15	.250	.250	1.25 MIN	.020	.250	.150	.150	
C15a	.590 / .620	.240 / .260	.850 MIN	.027 / .033	.590 / .620			
C15b	.590 / .620	.240 / .260	.850 MIN	.027 / .033	.590 / .620			.144 / .155

C18

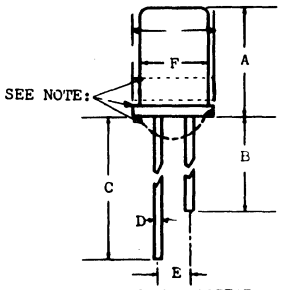

NOTE: FLANGE MAY APPEAR AT ANY POINT ON PACKAGE OR NOT AT ALL.

	A	B	C	D	E	F	G
C18c	.543 MAX	.472 MIN	.985 MIN	.020	.075	.205 MAX	
C18d	.335 MAX		1.18 MIN	.018	.087		.236 MAX
C18e	.269 MAX		1.16 MIN	.0138	.029		.130 MAX
C18f	.276 MAX	1.18 MIN		.018	.087	.197 MAX	.228 MAX
C18g	.410 MAX	1.38 MIN	1.50 MIN	.017	.071	.240 MAX	

C23

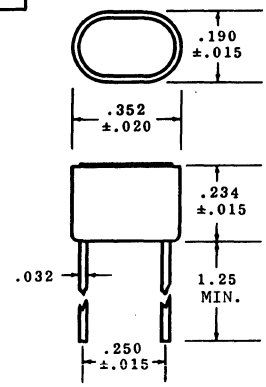

C29

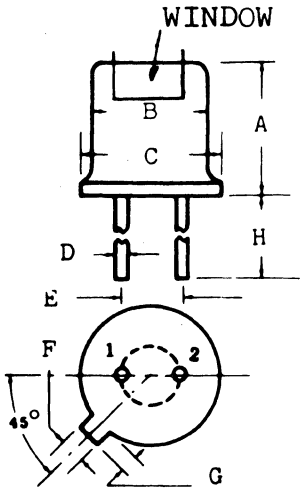

	A	B	C	D	E	F	G	H	1	2	WINDOW
C29	.210 MAX	.195 MAX	.230 MAX	.024 MAX	.100	.040	.041	1.00			NO
C29a	.291	.185	.216	.017	.098			1.00			NO
C29b	.075	.187	.219	.016		.041	.038	.500			NO
C29c	.181 / .210	.178 / .189	.209 / .230	.030	.100	.036 / .045	.033 / .046	.500			NO
C29d	.170 / .210	.177 / .192	.240 MAX		.090 / .110	.035 / .045	.019 / .048	1.00 MIN			NO
C29e	.170 / .210	.179 / .195	.210 / .230	.018	.100	.042	.038	.500 MIN			NO
C29f	.204	.192	.224	.017	.100	.039	.039	.500	A	C	.078
C29g	.204	.182	.210	.017	.100	.039	.039	1.50	C	A	.120
C29h	.291	.185	.216	.015	.100	.039	.039	1.18	A	C	.100
C29j	.295	.193	.217	.017	.098	.040	.040	1.50			NO
C29k	.145	.183	.210					1.50	A	C	YES
C29m	.184 / .210	.180 / .195	.225 MAX	.016 / .019	.100	.046 MAX	.048 MAX	1.50 MIN			NO
C29n	.900	.178 / .195	.209 / .230	.012 / .019	.100	.036 / .046	.028 / .048	.500 MIN	C	A	NO
C29p	.208 MAX	.194 MAX	.228 MAX	.017	.100	.039	.041	.984 MIN			NO
C29q	.248	.188	.224	.019	.100			.511			YES
C29r	.410 MAX	.179 / .195	.210 / .230	.018	.100	.042	.038	.500 MIN			NO
C29s	.209 MAX	.189 MAX	.228 MAX	.019 MAX	.100	.046 MAX	.046 MAX	.500 MIN	A	C	NO
C29t	.208	.188	.224	.019				.511			YES
C29u	.170 / .210	.178 / .195	.209 / .230		.100	.036 / .046	.029 / .390	1.50 MIN			YES

15. OUTLINE DRAWINGS

C42

	A	B	C	D	E	F
C42	.118 MIN	1.58 MIN	.0275	.495 MAX	.690 MAX	.169 MAX
C42a	1.60	.750	.300	1.92	.500	.450
C42b	1.50	.750	.300	1.92	.500	.450
C42c	1.00	.750	.300	1.24	.500	.420
C42d	.600	.880	.300	.765	.500	.290
C42e	.300	.880	.300	.600	.490	.290
C42f	.200	.880	.300	.375	.500	.190
C42g		.500	.200	.310	.470	.200
C42j	.200	.180	.030	.330	.220	.140
C42l	.300	1.00	.030	.525	.500	.220
C42m	.600	1.00	.030	.750	.500	.220
C42n	1.00	1.00	.030	1.20	.500	.220
C42p	1.30	1.00	.030	1.50	.500	.220
C42r	2.30	1.00	.030	2.50	.500	.220
C42s	.300	1.20	.030	.433	.270	.220
C42t	.295	.984	.032	.433	.256	.224
C42u	.250	1.00 MIN		.625	.688	.375
C42v	.200	1.00 MIN	.017 / .021	.407 MAX	.490 MAX	.210 MAX
C42w		.600 MIN	.019 / .021	.625	.430	
C42x	.098	.196 MIN	.013	.267 MAX	.267 MAX	.078 MAX

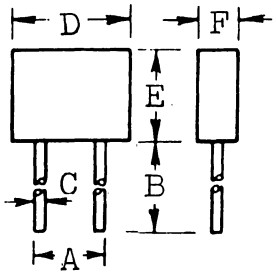

C63

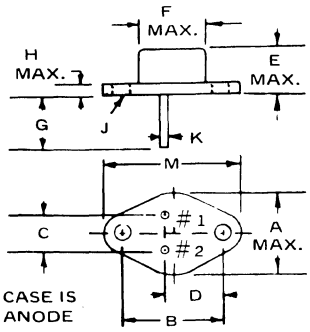

Suffix	A	B	C	D	E	F	G	H	J	K	M	N	O	O	1	2	REMARKS
C63b	.728 MAX	.905	.236	.516	.256 MAX	.571 MAX	.374	.032 MAX	.134 / .166	.032 / .048	1.25 MAX				A	C	
C63g		1.17 / 1.19	.420 / .440	.655 / .675	.250 / .450	.875 MAX	.312 / .500	.060 / .135		.048							ANODE CONNECTED TO BASE
C63j		1.17 / 1.19	.420 / .440	.655 / .675	.250 / .450	.875 MAX	.312 / .500	.060 / .135		.048							CATHODE CONNECTED TO BASE
C63k	1.05 MAX	1.17 / 1.19	.420 / .440	.655 / .675	.308 / .326	.830 MAX	.460 / .480	.066 / .099	.151 / .161	.038 / .043	1.57 MAX	.525 MAX	.205 / .225	.188 MAX			
C63l	.740	.905	.236	.515	.338	.559	.385	.078	.157 MAX	.039	1.24						

C74

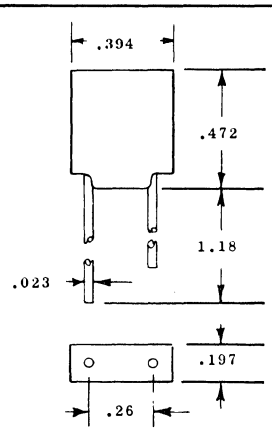

C77

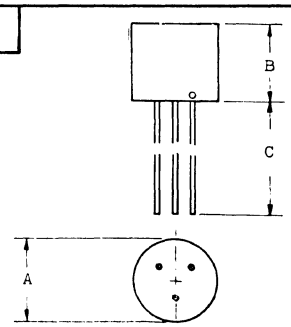

	A	B	C
C77	.375	.500	1.25
C77a	.400	.375	.180

C101

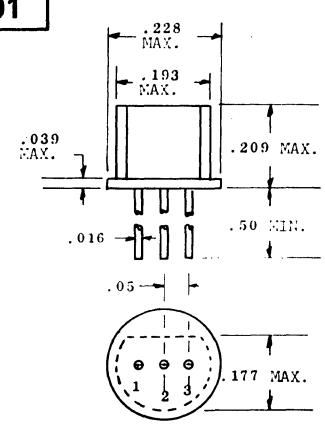

15. OUTLINE DRAWINGS

C112

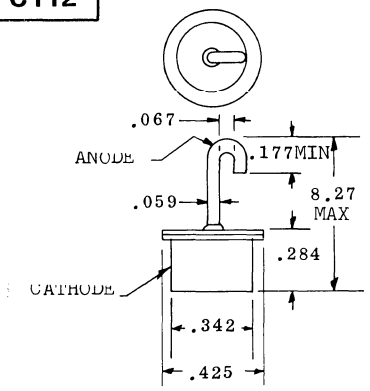

C144

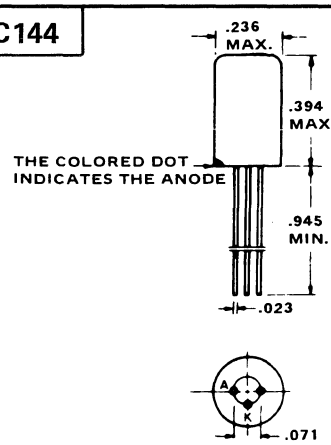

C156

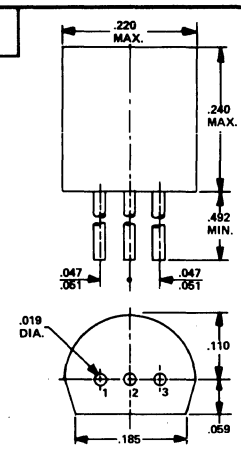

C162

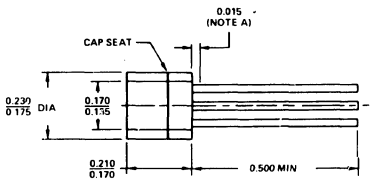

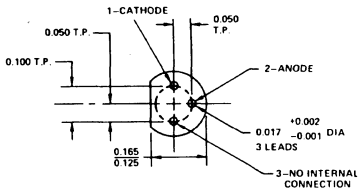

C186

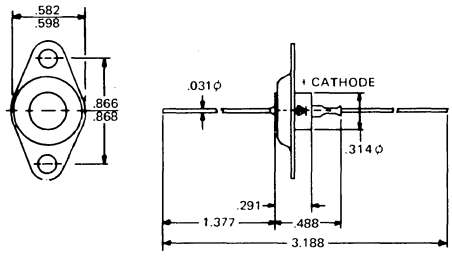

C188

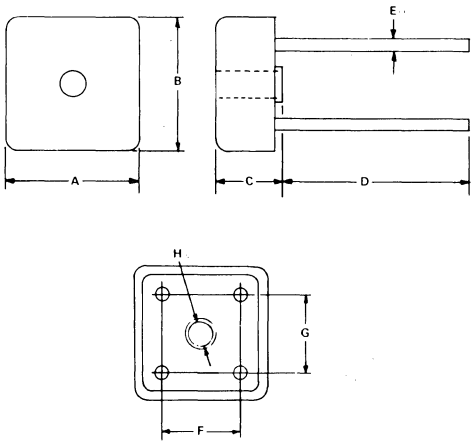

	A	B	C	D	E	F	G	H
C188	.511 MAX	.511 MAX	.295 MAX	.984 MIN	.047	.295	.295	.110
C188a	.669 MAX	.669 MAX	.295 MAX	.984 MIN	.055	.393	.393	.125
C188b	.984 MAX	.984 MAX	.295 MAX	.984 MIN	.055	.590	.590	.125
C188c	.750	.750	.250	.900	.056	.500	.500	.152
C188d	.750	.750	.437	.750	.030 MAX	.500	.500	N/A
C188e	.585 .615	.585 .615	.200	.750	.030	.425	.425	.147 .157
C188f	.750 MAX	.750 MAX	.250 MAX	1.00 TYP	.048 .052			.140 MAX

C189

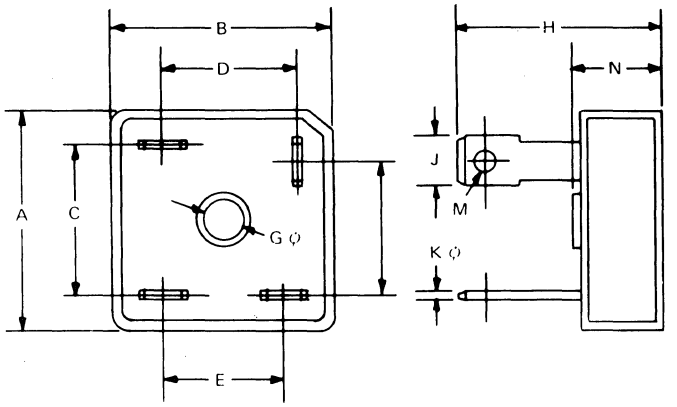

	A	B	C	D	E	F	G	H	J	K	M	N
C189	1.043 MAX	1.043 MAX	.708	.637	.566	.637	.177	.984 MAX	.236	.031	.094	.433
C189a	1.259 MAX	1.259 MAX	.708	.637	.566	.637	.192	.984 MAX	.249	.031	.094	.433
C189b	1.10	1.10	.742	.652	.562	.652	.207	.826				.393
C189c	1.125	1.125					.100	1.00	.250		.090	
C189d	1.125	1.125					.100	.740	.250		.090	

15. OUTLINE DRAWINGS

C190

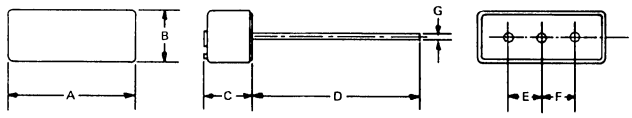

	A	B	C	D	E	F	G
C190	.590 MAX	.236 MAX	.216 MAX	.787 MIN	.157	.157	.031
C190a	.590 MAX	.275 MAX	.216 MAX	.984 MIN	.157	.157	.039

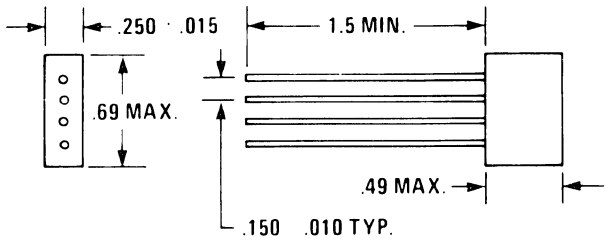

C191

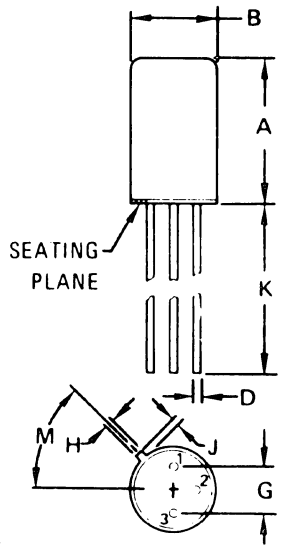

STYLE 1:
PIN 1. REFERENCE
2. INPUT
3. COMMON

DIM	MILLIMETERS MIN	MILLIMETERS MAX	INCHES MIN	INCHES MAX
A	–	17.02	–	0.670
B	9.14	9.78	0.360	0.385
D	0.41	0.48	0.016	0.019
G	4.83	5.33	0.190	0.210
H	0.71	0.86	0.028	0.034
J	0.51	–	0.020	–
K	38.10	–	1.500	–
M	42°	48°	42°	48°

C199

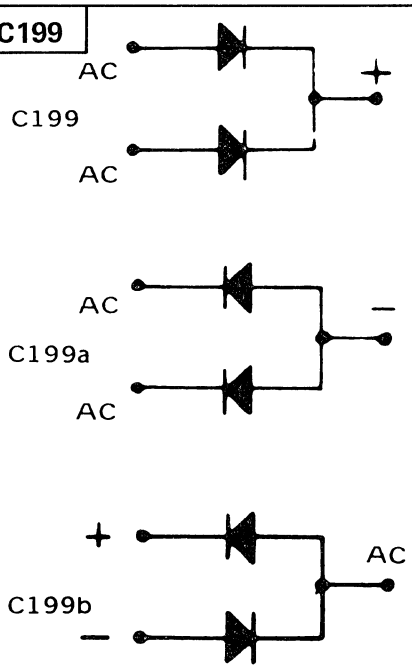

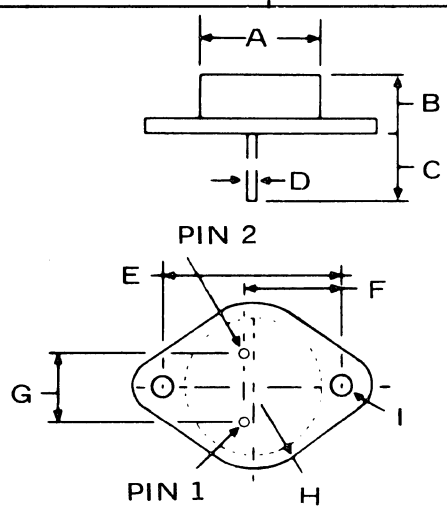

LTR	MILLIMETERS
A	18,29
B	8,20-8,69
C	10,16
D	,97-1,09
E	29,97-30,33
F	16,89-17,15
G	10,82-11,18
H	13,34
I	3,84-4,09

C206

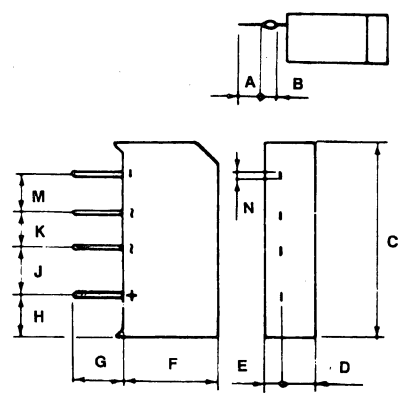

	A	B	C	D	E	F	G	H	J	K	M	N
C206	5	3.75	40	6.5	3.5	20	9	7.5	10	7.5	7.5	1.1
C206a	5	3.75	40	6.5	2.5	20	9	7.5	10	7.5	7.5	1.1
C206b	5	3.75	40	6.5	3.5	20	9	7.5	10	7.5	7.5	1.1
C206c	5	3.75	40	10	3.5	20	9	7.5	10	7.5	7.5	1.1

15. OUTLINE DRAWINGS

C202

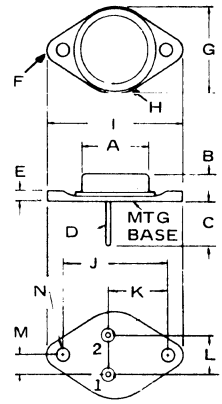

	A	B	C	D	E	F	G	H	I	J	K	L	M	N
C202	.830 MAX DIA	.360 MAX	.610 .710	.050 .060	.135 MAX		1.05 MAX		1.55 MAX	1.17 1.19	.650 .670	.420 .440	.205 .225	.151 .161
C202a	.830 MAX DIA	.310 .320	.440 .480	.050 .060	.144 MAX	.180R MAX	1.03 MAX	.520H MAX	1.52 MAX	1.18 1.19	.662 .668	.425 .435	.213 .217	.153 .159

C204

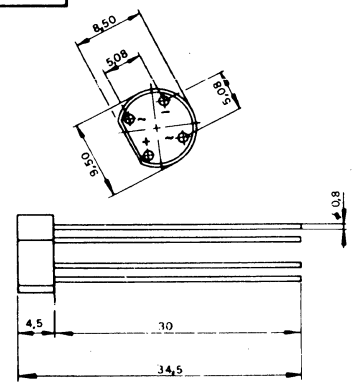

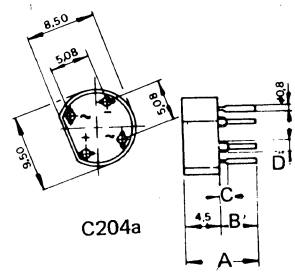

C204a

	A	B	C	D
C204a	9.0	4.5	1.0	1.30

C205

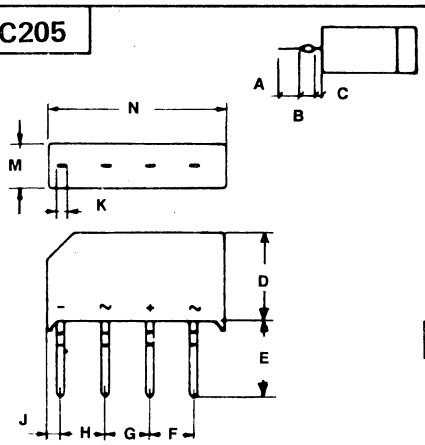

	A	B	C	D	E	F	G	H	J	K	M	N
C205	2.75	3.25	.25	11	6.25	5	5	5	1.75	1.1	5	20
C205a			.3	9.8	5.5	5	5	5	2	1.1	5	24

C207

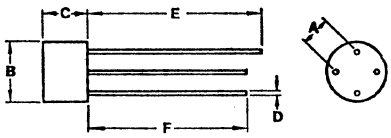

LETTER	INCHES	MILLIMETERS
A	0.202	5.13
B	0.375 Dia	9.525
C	0.28	7.112
D	0.03 Dia.	0.765 Dia.
E	1.1 Min.	27.94 Min.
F	1	25.4

C208

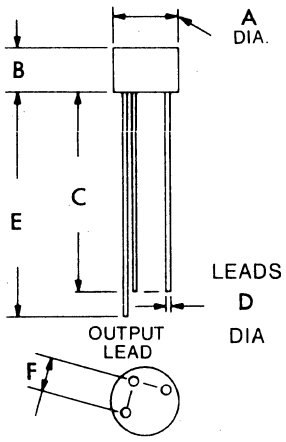

	A	B	C	D	E	F
C208	.320	.200	1.20 MIN	.032	1.31 MIN	.180 .220
C208a	.355	.140 .280	1.00 MIN	.032	1.20 MIN	.180 .220

C209

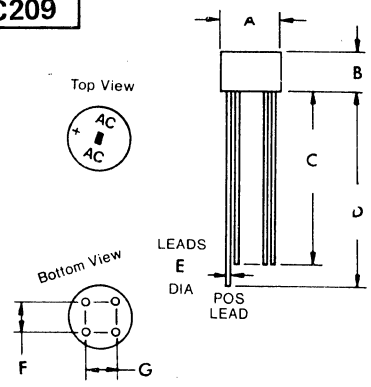

Dimensions in inches

Suffix	A	B	C	D	E	F	G
C209	.320	.20	1.203	1.325	.032	.200	.200
C209a	.320	.20	.5315 .4685	.6415 .5785	.032	.220 .180	.220 .180
C209b	.375	.281	1.203	1.325	.032	.200	.200
C209c	.320	.20	1.265	1.39	.032	.200	.200
C209d	.320	.138	.4921	.3937	.032	.200	.200
C209e	.320	.138	1.142	1.26	.032	.200	.200
C209f	.354	.138	.4921	.3937	.032	.200	.200
C209g	.354	.138	1.142	1.26	.032	.200	.200
C209h	.355 MAX	.140 .280	25.4 MIN	30.5 MIN	.032 MAX	.220	.220
C209j	.395	.275 .285	1.00 MIN	1.20 MIN	.032	.180 .220	.180 .220
C209k	.300 .340	.200 .220	1.14 MIN	1.26 MIN	.030 .032	.180 .220	.180 .220
C209m	.395	.142	.50	.60	.032	.220	.220
C209n	.395	.285	.50	.60	.032	.220	.220

C214

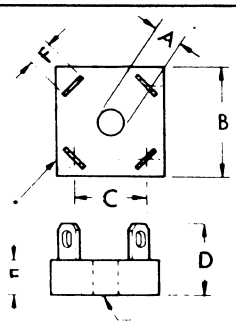

Dimensions in inches

Suffix	A	B	C	D	E	F
C214	.156	.75	.500	.565	.275	.188
C214a	.193	1.125	.625	.8125	.4375	

15. OUTLINE DRAWINGS

C216

Note: Type of connector may vary.

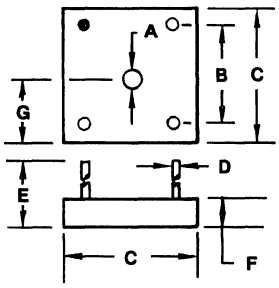

Note: Type of connector may vary.

Suffix	A	B	C	D	E	F	G
C216	.125	.500	.750	.050	.875 MIN	.275	
C216a	.087	.425	.600	.040	.75 MIN	.250 MAX	
C216b			.590 .530		1.098 MAX	.244 .252	NA
C216c		.500 TYP	.750	.030	.75	.250	.120
C216d		.425 TYP	.600	.043 .037	.80 MIN	.200	.135 .165
C216e			.620 MAX	.030	.85 MIN	.260 MAX	.144
C216f		.7677	1.122	.051	.433	.394	.206
C216g	.147		.750				.147
C216h	.147		.750		.250 MAX	.250 MAX	.147
C216j		.400	.750	.032	.75 MIN	.250	.152
C216k			2.00		.500 MAX	.750 MAX	.250
C216l		.591	1.00	.0591	.669	.315	

C218

Note: Type of connector may vary.

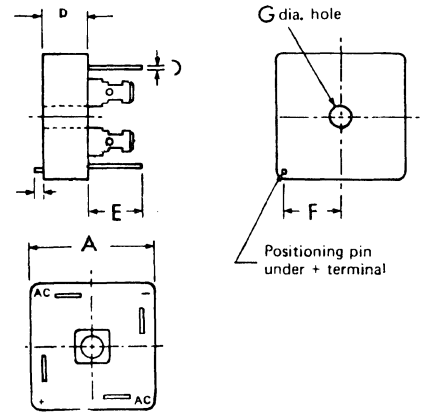

Suffix	A	B	C	D	E	F	G
C218	1.126	.441	.063	.031	.598	.500	.193
C218a	1.125	.4375			.375		.193
C218b	1.125	.437	.0625	.032	.563		.193
C218c	1.122	.433		.031	.531		.185
C218d	1.00 1.08	.360 .440			.520 MAX		
C218e	7.35 7.55	.226 .246	NA		.324		.130 .150
C218f	1.125	.312	.062		.428	.562	.190
C218g	1.20	.413			.492	.600	.200
C218h	1.14	.492	NA		.374	NA	.201

C219

Note: Type of connector may vary.

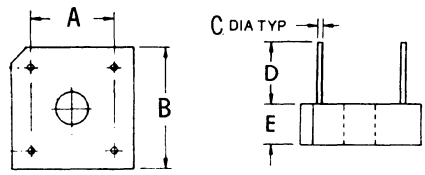

Polarities shown on side of case; positive lead by beveled corner.

Dimensions in inches

Suffix	A	B	C	D	E
C219	.500	.750	.050	.875 MIN	.275
C219a	.425	.600	.040	.750 MIN	.250
C219b	.1968	.370	.030	.984	.315
C219c	.400	.700	.060	.600 MAX	.300 MAX
C219d	.300	.520 MAX	.044	.600 MIN	.280 MAX
C219e	.400	.640 MAX	.044	.600 MIN	.280 MAX
C219f	.393	.669	.055	.984	.275
C219g	.590	.984	.055	.472	.393
C219h	.425	.600	.030	.750 MIN	.250 MAX
C219i	.500	.750	.050	.750	.30
C219j	.425	.600	.040	.750 MIN	.20
C219k	.425	.600	.032	.750	.20
C219l	.394	.650	.055	.984	.236
C219m	.425	.600	.030 TYP	.750 MIN	.200 TYP
C219n	.425	.600	.040	.750 MIN	.250 TYP

C229

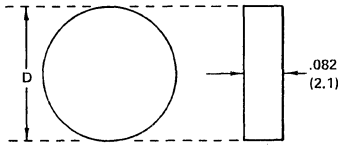

	Type	A4	PR4	SOZA
D	Inches	.082	.158	.220
	mm.	2.1	4.0	5.6

C222

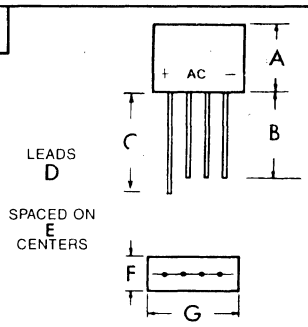

Dimensions in inches

Suffix	A	B	C	D	E	F	G
C222	.52	1.125	1.50	.030	.150	.250	.690
C222a	.625	.500		.050	.200	.250	.750
C222b	.468	1.50 MIN	1.50 MIN	.032	.150	.250	.688
C222c	.468	1.50 MIN	1.50 MIN	.051	.150	.250	.688
C222d	.63	.500 MIN	.500 MIN	.038 .042	.200	.270	.82
C222e	.50	1.00 MIN	1.00 MIN	.029 .033	.150	.250	.68
C222f	.500	1.25	1.375	.032	.150	.250	.687
C222g	.500	1.25	1.375	.050	.150	.250	.687
C222h	.468	1.50 MIN	1.50 MIN		.150	.250	.688
C222j	.500 MAX	.750 MIN	.860 MIN	.050	.150	.250	.690
C222k	.500	.750	.860	.030	.150	.250	.690
C222l	.500 MAX	.75 MIN	.75 MIN	.030	.150	.250	.690
C222m	.470 .530	.500 MIN		.030 .034	.140 .160	.240 .260	.670 .710
C222n	.625	1.00		.040	.200	.250	.750
C222p	.625	1.00		.050	.200	.250	.750

C224

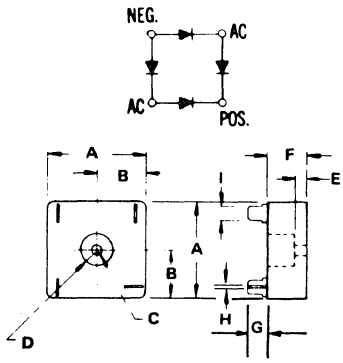

Terminals are .25" – 6,35mm Faston or Equivalent

Suffix	A	B	C	D	E	F	G	H	I
C224	1.85	.925	.187 DIA	.625 DIA	.189	.75	.35	.032	.250
C224a	1.12		NA	.206	NA	.39	.44		.250
C224b	1.125	.500	.193	NA	NA	.437	.563		
C224c	1.125		NA	.500	.35	.500	.500		
C224d	1.125	.562	NA	.193	NA	.406	.594	.032	.250
C224e	1.125	.562	NA	.193	NA	.440	.560 MAX	.032	
C224f	.750 MAX		.140	NA	NA	.240 MAX	.330	.040	
C224g	1.125 MAX	.562	NA	.193	NA	.328 MAX	.422	.040	
C224j	1.14 MAX	.570 MAX	6-32	N/A	N/A	.400 MAX	1.00 MAX		.250 MAX
C224k	1.13 MAX	.565 MAX	6-32	N/A	N/A	.438 MAX	.562 MAX		.250 MAX

15. OUTLINE DRAWINGS

C230

NOTE:
1. DIM "Q" SHALL BE MEASURED ON HEATSINK SIDE OF PKG.
2. DIMENSIONS F AND G SHALL BE MEASURED AT THE REFERENCE PLANE.

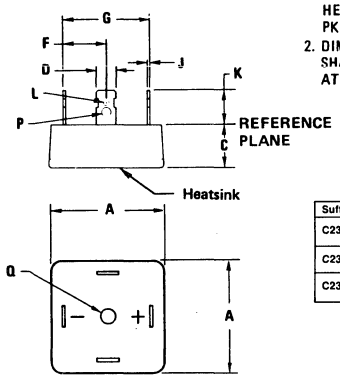

Suffix	A	C	D	F	G	J	K	L	P	Q
C230	1.010 1.030	.490 .550	.240 .260	.394 .413	.787 .827	.028 .034	.375 .450	.060 .081	.110 .115	.174 .184
C230a	.875	.300	.250		.775		.450 MAX			.165
C230b	1.385 MAX	.550 MAX	.250	.550 .571	1.100 1.142	.028 .034	.375 .450	.060 .081	.110 .115	.170 .190

C231

Note: Terminal configuration may vary.

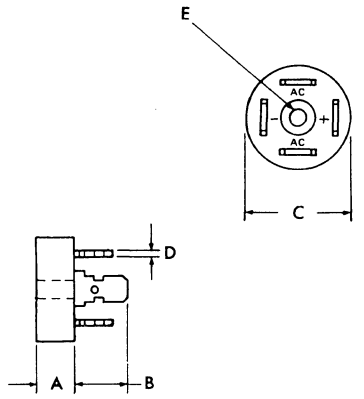

Suffix	A	B	C	D	E
C231	.299 MAX	.500 MAX	.890 MAX	.031	.150
C231a	.500	.500	2.00		.250
C231b	.625	.313	.750		.375
C231c	.591	.984	2.165	.039	.331

C232

Note: Type of connector may vary.

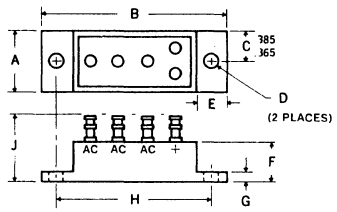

Suffix	A	B	C	D	E	F	G	H	J
C232	.740 .760	2.24 2.26	.365 .385	.164 .174	.370 .390	.486 .506	.115 .135	1.87 1.88	.820 MAX
C232a	.750	2.25	.375	.169	.375	.420	.120	1.87	.800 MAX

C233

Suffix	A	B	C	D	E	F	G	H	J	K
C233	1.12	1.00	.085	.080	.200	.180	.750	.250	.625	.040
C233a	1.50	1.375	.095	.096	.260	.260	.870	.310	.750	.070

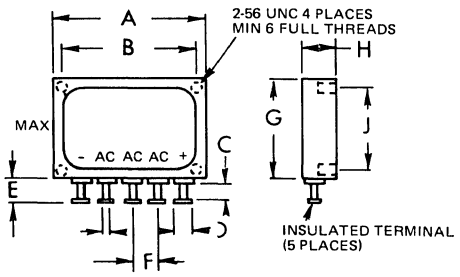

C234

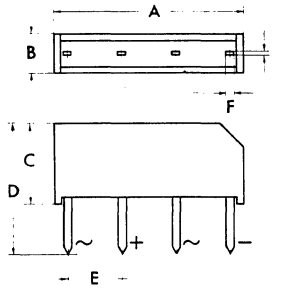

SKB B . . . C 1400
w = 3 g

	A	B	C	D	E	F	G
C234	1.02	.209	.433	.669	.295	.047	.012
C234a	.748	.197	.512	.709	.197	.047	.012
C234b	.787	.197	.394	.701	.197	.043	.012

C235

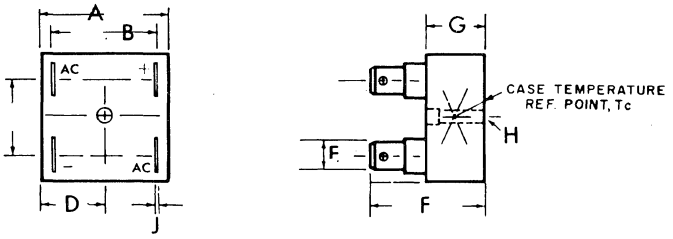

Suffix	A	B	C	D	E	F	G	H	J
C235	1.00	.900	.570	.525 .490	.250	.880 MAX	.455 .390		.037 .085
C235a	1.00	.900	.570	.525 .490	.250	.880 MAX	.455 .390	.150	.037 .085
C235b	.950 1.20	.800 .850	.615 .670		.250	1.00 MAX	.410 .450	.170 .180	.030 .034

15. OUTLINE DRAWINGS

C236

Note: Type of connector may vary.

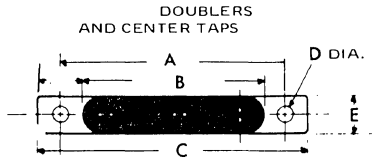

Suffix	A	B	C	D	E	F	G	H
C236	1.875	1.47	2.25	.169	.344	1.00 MAX	.375	.125

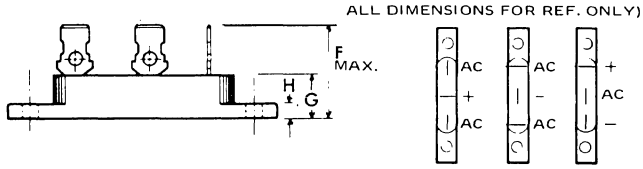

C237

Note: Type of connector may vary.

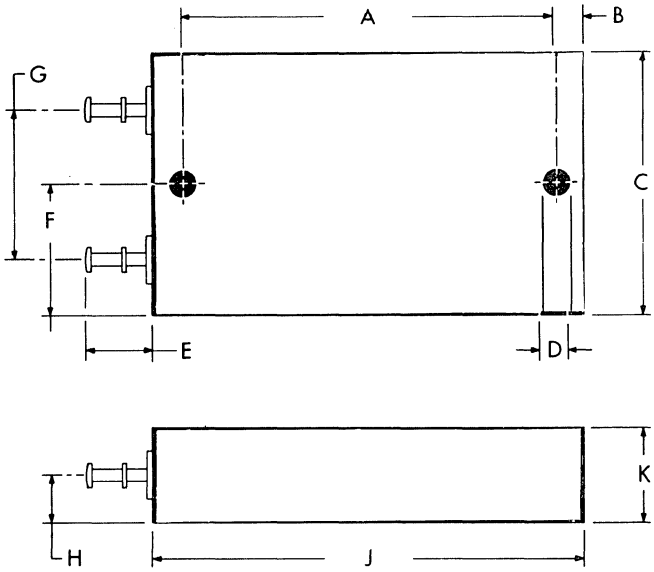

Suffix	A	B	C	D	E	F	G	H	J	K
C237	1.950	.150	1.375	.125	.345	.690	.800	.250	2.250	.500
C237a	2.120	.190	.890	.125	.345	.445	.450	.335	2.50	.670
C237b	1.75	.125	.750	.125	.400	.375	.562		2.00	.500

C238

Note:Type of connector may vary.

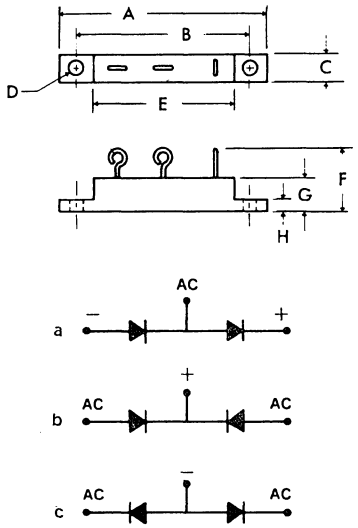

Suffix	A	B	C	D	E	F	G	H
C238	2.26 2.24	1.88 1.87	.364 .334	.175 .165	1.49 1.48	.660 MAX	.322 .302	.135 .115
C238d	2.25	1.875	.334	.169	1.47	1.0 MAX	.375	.125
C238e	2.240 2.260	1.870 1.880	.334 .354	.170 .180	1.460 1.480	.700 MAX	.360 .380	.115 .135

Note: P = positive center tap N = negative center tap
D = Doubler

C239

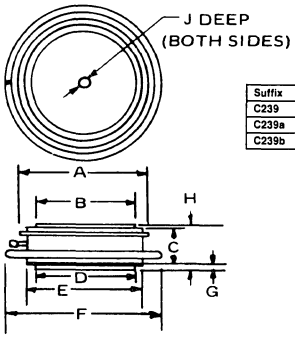

Suffix	A	B	C	D	E	F	G	H	J
C239	2.91	1.77	.551		2.52	3.31	.016		.059
C239a	2.91	1.77	.630	1.77	2.52	3.30	.039		.078
C239b	2.91	1.77			2.52	3.27	.039	.551	.078

15. OUTLINE DRAWINGS

C240

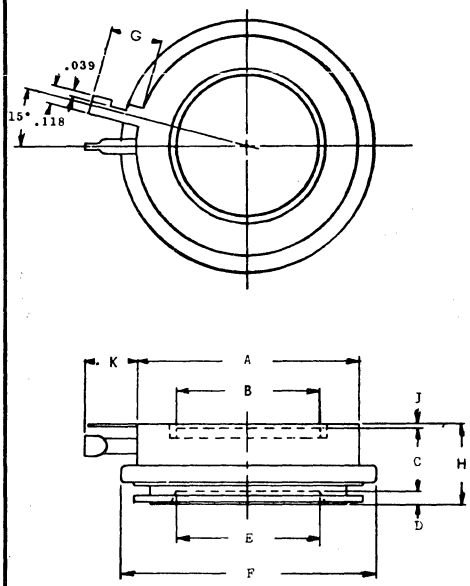

Suffix	A	B	C	D	E	F	G	H	J	K
C240	1.33	.866	.374 .396	.078	.866	1.50	.314	.465 .503	.019	.314
C240a	1.45	.984	.394 .416	.059	.984	1.69	.314	.465 .503	.019	.314
C240b	1.96	1.33	.659 .697	.015	1.33	2.36	.393	.689 .727	.015	.393
C240c	1.96	1.33	.659 .697	.015	1.33	3.30	.393	.689 .727	.015	.393
C240d		1.34	.680	.015	1.34	3.35	.350	.710	.015	
C240e	1.61	.748			.748	1.417	.275	.531		

C241

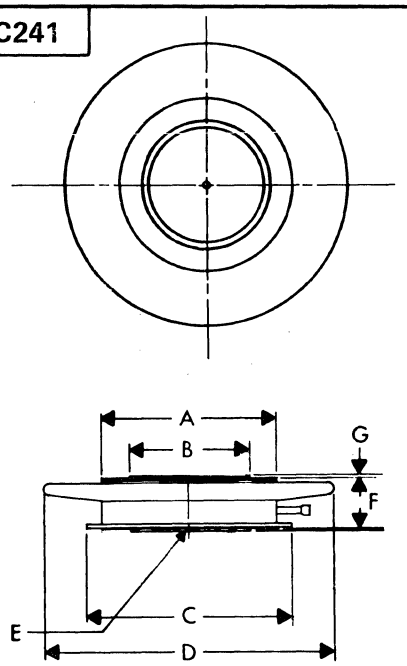

Suffix	A	B	C	D	E	F	G
C241	1.96	1.37	2.36	3.30	.070 .086	.629	.019 MIN
C241a		1.49		3.14	.137	.570 .610	
C241b		1.18		2.75 MAX	.078 .196	.532 .570	
C241c		1.37		3.14 MAX	.078 .196	.544 .558	

C242

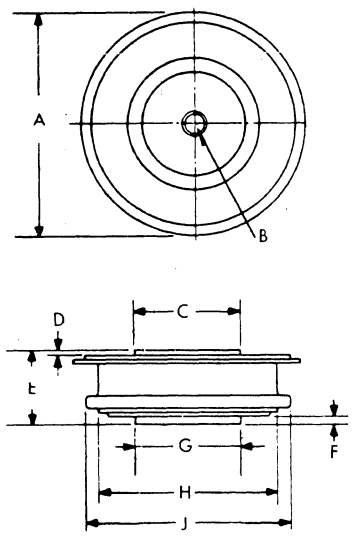

Suffix	A	B	C	D	E	F	G	H	J
C242	1.61	.140	.750	.030	.520	.030	.750	1.26	1.44
C242a	1.580 1.655	.140	.750	.030 .060	.525 .575	.030 .060	.750		
C242b	1.604	.139	.748	.078	.551	.074	.748		
C242c	1.732 MAX	.197 .213	.768 .807		.531 .571		.197 .213		
C242d	2.01 MAX	.150 .165	.965 1.004		.531 .571		.150 .165		
C242e	2.362 MAX	.150 .165	1.161 1.201		.531 .571		.150 .165		
C242f	2.638	.165	1.299		.591		.165		
C242g	2.00 MAX	.166 MAX	.984		.551		.984		

C243

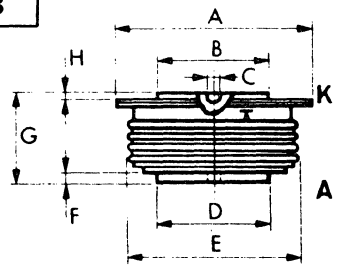

	A	B	C	E	F	G	H
C243	57.2	34	3.6	52	2.0	26.2	1.5
C243a		47.5	3.6	72.9	1.27	27.9	1.27

C244

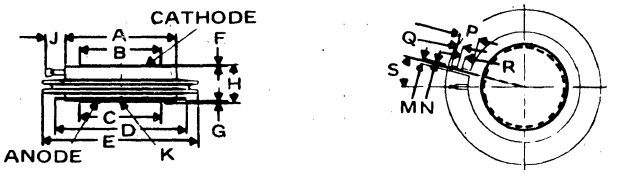

Suffix	A	B	C	D	E	F	G	H	J	K	M	N	P	Q	S
C244	2.59	1.96	1.96	2.99	3.54	.015 MIN	.015 MIN	.820	.393	.086	.118	.039	.393	.115	15°
C244a		1.97	1.97		3.62	.016	.016	.830		.079	.200	N.A.	.350	N.A.	15°
C244b	2.913	1.968	1.968		2.913	.276		1.02							

C245

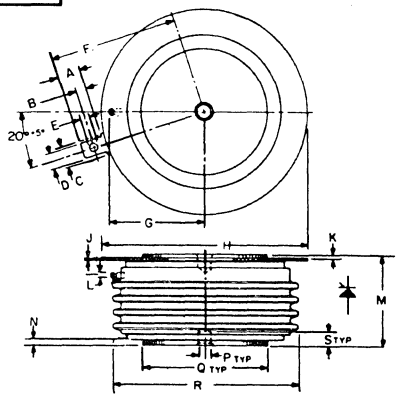

Suffix	A	C	D	E	F	G	H	K	M	N	P	Q	R	S
C245	.240 .260	.245 MIN	.186 .191	.060 .075	1.430 MAX	1.065 MAX	2.20 2.50	.030 .130	1.000 1.065	.030 .096	.130 .150	1.300 1.345	2.150 MAX	.067 .083
C245a	.245 .265		.186 .189		1.685 1.715		2.845 2.865	.055 .080	1.030 1.090	.055 .080	.137 .143	1.845 1.875	2.630 2.640	.080 .090
C245b							1.930		1.078			1.750	2.015	
C245c							2.992		1.102		.138	1.890	2.756	
C245d							2.283		1.122		.122	1.496	2.047	
C245e						1.12 1.15	2.24 2.30	.030 .110	1.01 1.06	.070 .090	.135 .145	1.33 1.34		.030 .110
C245f .083	.3195 .063	.3055		.186	.189	2.245	NA 2.255	3.871	.060 3.879	1.38 MIN	.060 MAX	.143 MIN	2.473 .147	2.477
C245g .080 2.640	.225 .090	.2925		.186	.789	1.685	NA 1.715	2.845	.055 2.925	1.000 .080	.055 1.090	.137 .080	1.845 .143	2.590 1.875

15. OUTLINE DRAWINGS

C246

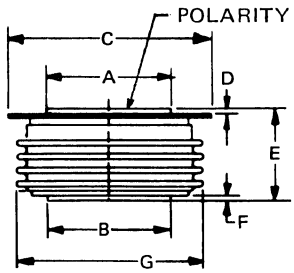

Suffix	A	B	C	D	E	F	G	POLARITY
C246	1.342	1.342	2.25	.040 MIN	1.04	.050 MIN	2.090 MAX	
C246a	1.338	1.338	2.25	.040 MIN	1.04	.050 MIN	2.090 MAX	
C246b	1.300 / 1.345	1.300 / 1.345	2.200 / 2.500	.030 / .130	1.000 / 1.065	.030 / .096	2.150	
C246c	1.26	1.26	2.26		1.02			
C246d	1.850	1.850	2.870	.050 MIN	1.05	.050 MIN	2.56 / 2.64	
C246e	1.845 / 1.855	1.845 / 1.855	2.850 / 2.900	.050 MIN	1.02 / 1.06	.050 MIN	2.56 / 2.64	CATHODE
C246f	1.338	1.338	2.27	.040 MIN	1.04	.040 MIN	2.06	CATHODE
C246g	1.744 / 1.755	1.744 / 1.755	2.90	.060 MIN	1.04	.060 MIN	2.64	CATHODE
C246h	1.512	1.512	2.256	.035 / .043	1.000 / 1.039	.035 / .043	2.028 / 2.070	CATHODE
C246j	1.269	1.269	2.244		1.062		2.047	CATHODE
C246k	1.257		2.283		1.003 / 1.043			CATHODE
C246l	1.88	1.88	2.95		1.02		2.75	CATHODE
C246n	2.47 / 2.48	2.47 / 2.48		.050 MIN	1.26 / 1.30	.050 MIN	3.44 / 3.56	CATHODE
C246o	2.88	2.88	4.35	.034 MIN	1.387 / 1.447	.034 MIN		ANODE
C246p	1.811 MIN	1.811 MIN	2.913 MAX		.984 / 1.063		2.677 MAX	CATHODE

C247

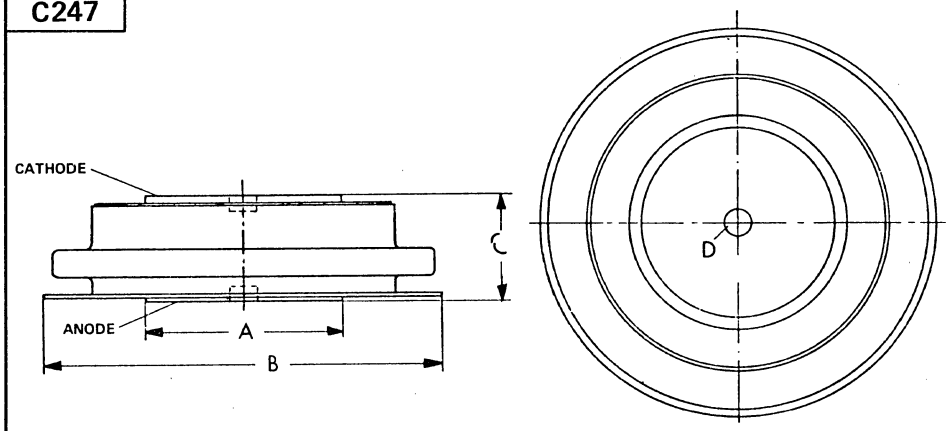

Suffix	A	B	C	D
C247	.984	1.95 / 1.96	.053 / .057	.137
C247a	.708	1.52 / 1.73	.531 / .570	.137

C248

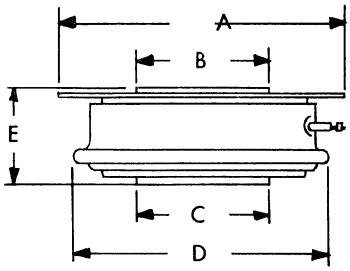

Suffix	A	B	C	D	E
C248	1.634	.748	.748	1.476	.598 MAX
C248a	1.70 MAX	.945	.945		.550 / .590
C248b	1.732	.984	.984	1.732	.551
C248c		1.22	1.22	1.97	.571

C249

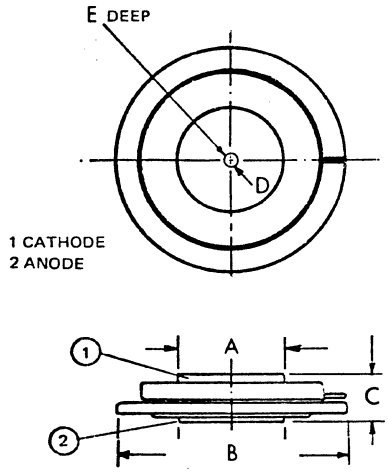

Suffix	A	B	C	D	E
C249	1.378	2.953 MAX	.551	.205	.078
C249a	2.165	3.937 MAX	.827	.205	.098

15. OUTLINE DRAWINGS

C250

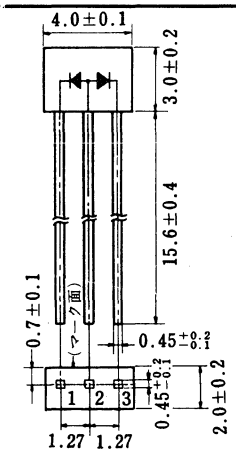

Unit : mm

1 : Cathode
2 : Anode
3 : Cathode

C250a

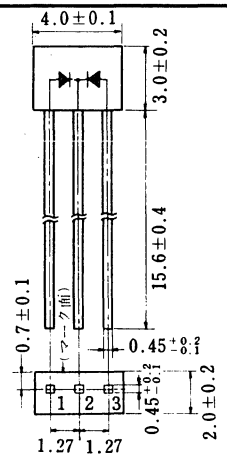

Unit : mm

1 : Anode
2 : Cathode
3 : Anode

C251

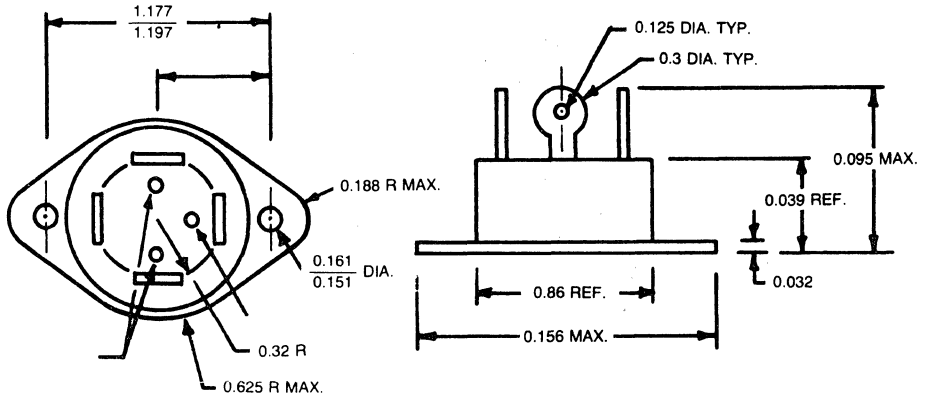

C252

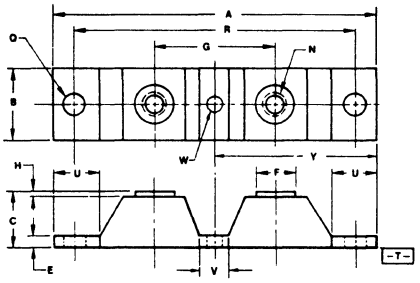

NOTES
1 DIMENSIONS A AND B ARE DATUMS AND -T- IS A DATUM SURFACE AND SEATING PLANE
2 POSITIONAL TOLERANCE FOR N HOLES
⌖ ⌀ 0.13 (0.005) Ⓜ T A Ⓜ B Ⓜ
3 POSITIONAL TOLERANCE FOR Q AND W HOLES
⌖ ⌀ 0.25 (0.010) Ⓜ T A Ⓜ B Ⓜ
4 DIMENSIONING AND TOLERANCING PER ANSI Y14.5, 1973

DIM	MILLIMETERS MIN	MILLIMETERS MAX	INCHES MIN	INCHES MAX
A	–	92.20	–	3.630
B	17.78	20.32	0.700	0.800
C	–	15.87	–	0.625
E	3.05	3.30	0.120	0.130
F	12.45	12.95	0.490	0.510
G	34.92 BSC		1.375 BSC	
H	–	1.27	–	0.050
N	—		1/4-20 UNC	
Q	6.86	7.11	0.270	0.280
R	80.01 BSC		3.150 BSC	
U	15.24	–	0.600	–
V	8.38	8.89	0.330	0.350
W	4.32	4.82	0.170	0.190
Y	46.10 BSC		1.815 BSC	

CASE 357B-01

Terminal Penetration	0.315 Max.
Terminal Torque	25–50 lb.-in.
Mounting Base Torque	30–40 lb.-in.

C254 Dimensions in mm

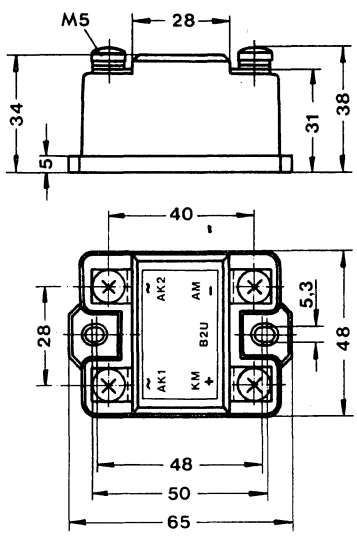

C255 Dimensions in mm

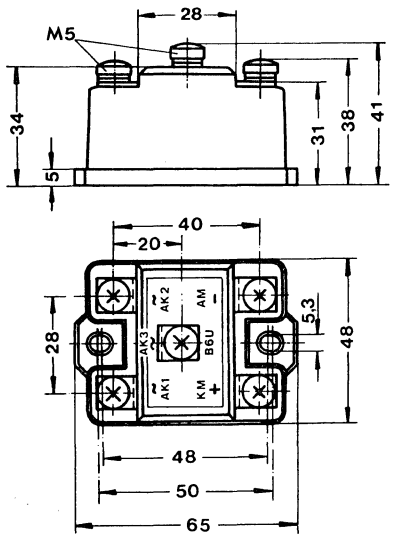

15. OUTLINE DRAWINGS

C253

Ltr	Dimensions			
	INCHES		MILLIMETERS	
	MIN.	MAX.	MIN.	MAX.
C_1	.552	.572	14.02	14.53
C_2	.624	.760	15.85	19.30
C_3	.312	.380	7.92	9.65
C_4	.495	.512	12.57	13.00
ϕD_1	.189	.195	4.80	4.95
ϕD_2	.057	.067	1.45	1.70
ϕD_3	.108	.118	2.74	3.00
ϕD_4	.141	.151	3.58	3.84
ϕD_5	.225	.235	5.72	5.97
H_1	.669	1.060	17.53	26.92
H_2	.300	.500	7.62	12.70
H_3	.040	.060	1.02	1.52
H_4	.042	.062	1.07	1.57
L_1	.370	.560	9.40	14.22
L_2	.307	.365	7.80	9.27
L_3	.089	.099	2.26	2.49
L_4	.132	.142	3.35	3.61
L_5	.026	.036	.66	.91
W	1.104	1.144	28.04	29.06

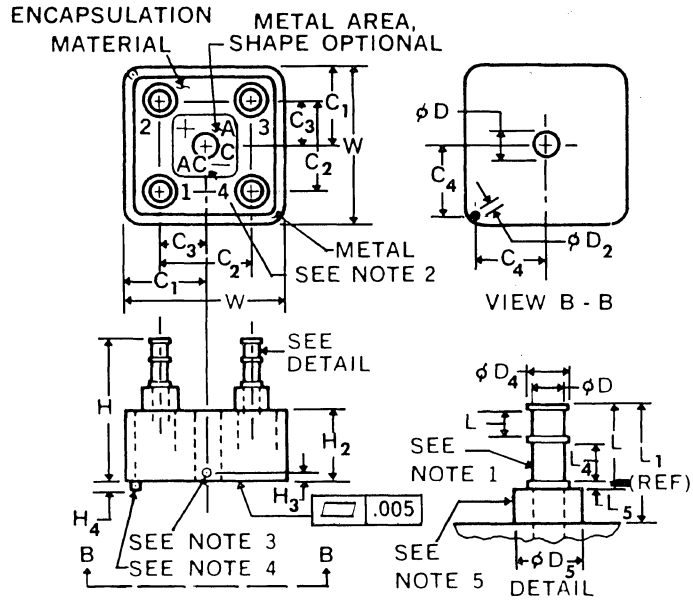

NOTES:
1. Terminals shall be hot tin dipped or silver plated.
2. Polarity shall be marked on terminal side of device.
3. Point at which T_C is read (must be in metal part of case).
4. Locating pin shall be adjacent to positive terminal.
5. Insulating sleeve shall be alumina (AL_2O_3) or equivalent.

C256

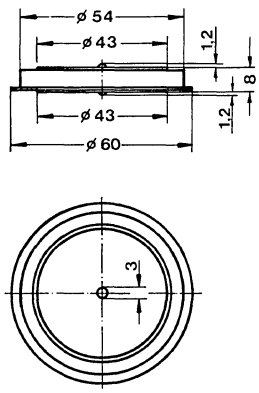

C257

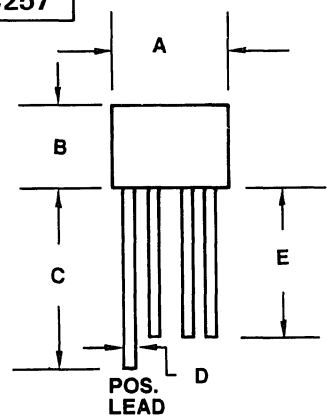

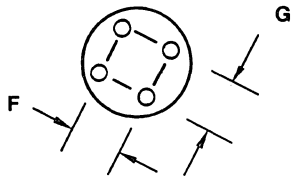

	A	B	C	D	E	F	G
C257	7.6 / 8.6	5.1 / 5.6	32	.76 / .81	29	4.6 / 5.6	4.6 / 5.6
C257a	9.5	7.1	3.3	.8	30	5.1	5.1

C258

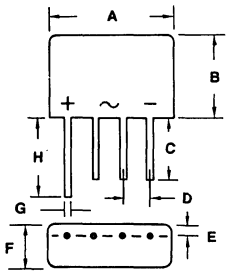

	A	B	C	D	E	F	G	H
C258	17 / 18	12 / 13	12	3.6 / 4.1	2.0 / 2.6	6.1 / 6.6	.76 / .86	14.5
C258a	40	21.6	9	7.5		6.5	1.1	9

C259

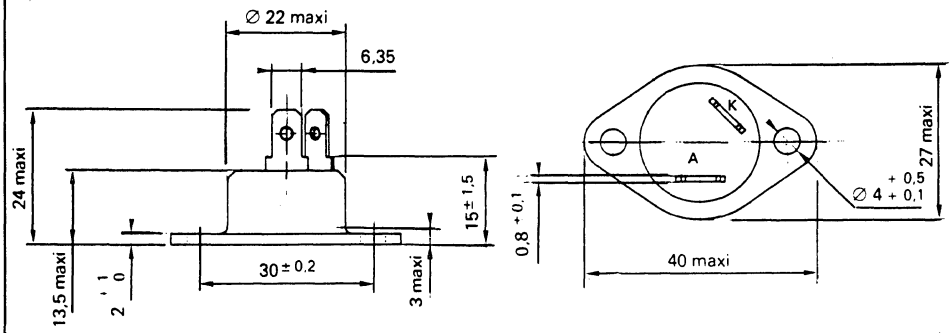

15. OUTLINE DRAWINGS

C260

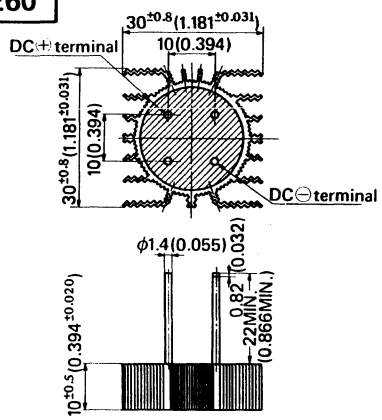

C261

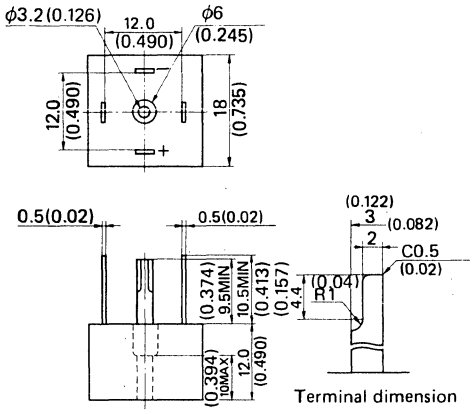

C262

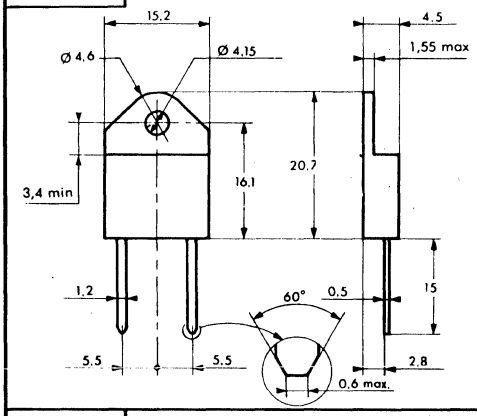

C263

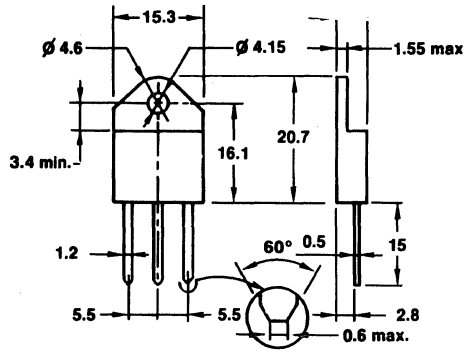

C267

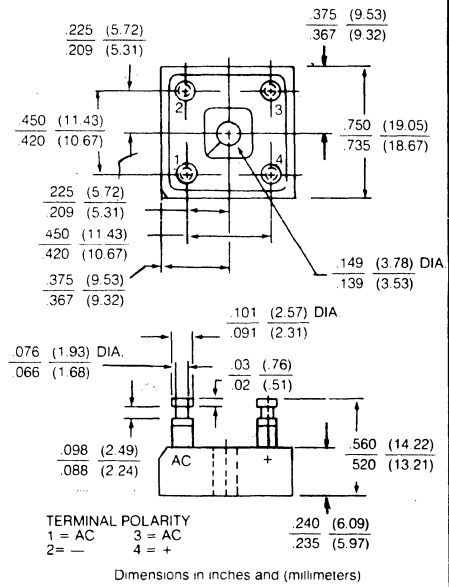

Dimensions in inches and (millimeters)

C264

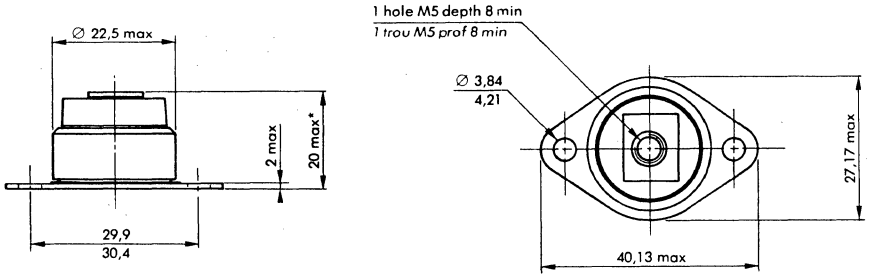

* 26 mm with the M5 screw head

C265

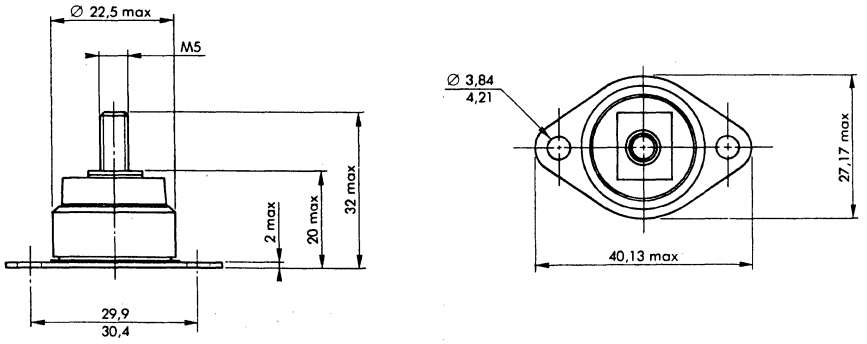

C268

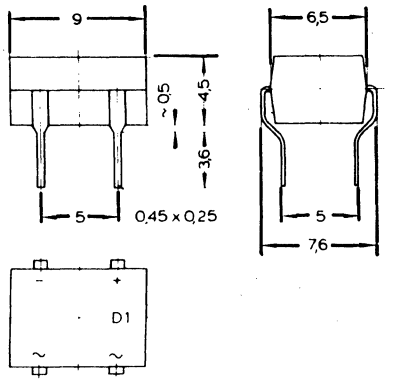

15. OUTLINE DRAWINGS

TYPICAL OUTLINE DRAWING DIMENSIONS

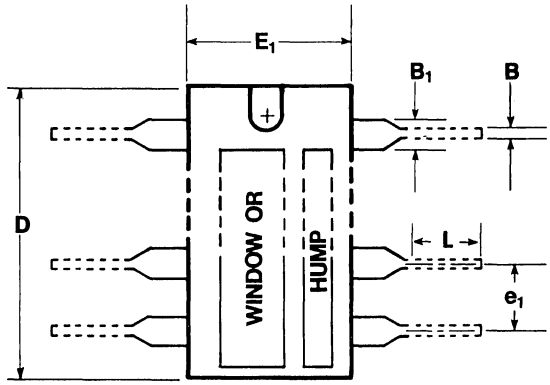

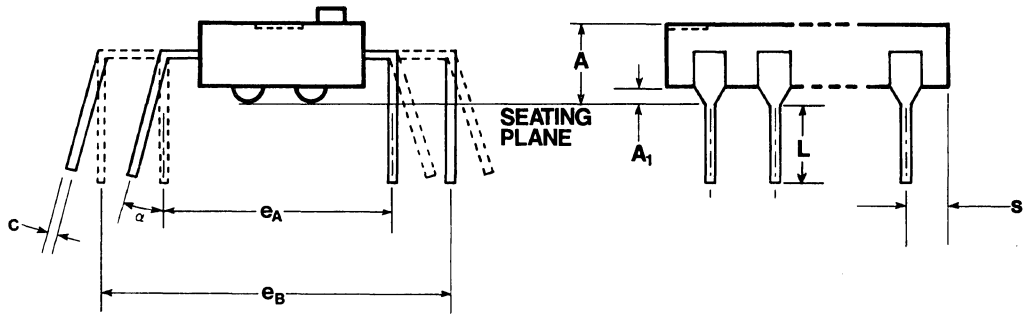

Specific Examples

Da

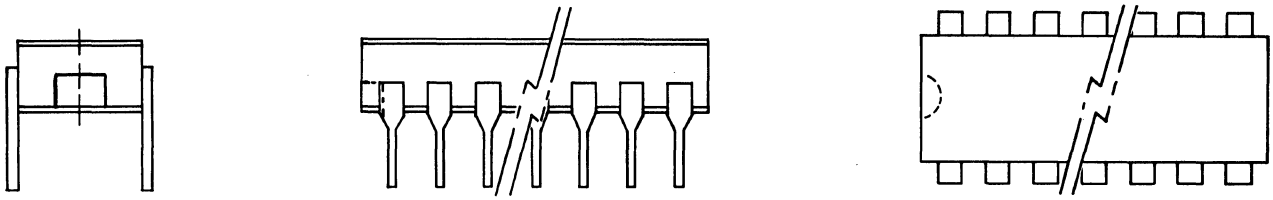

Db

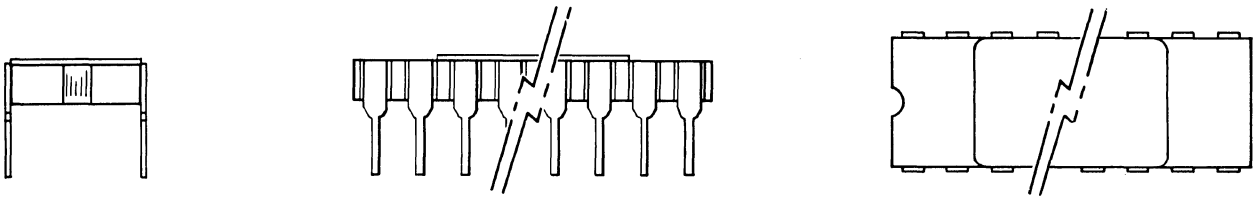

Dc

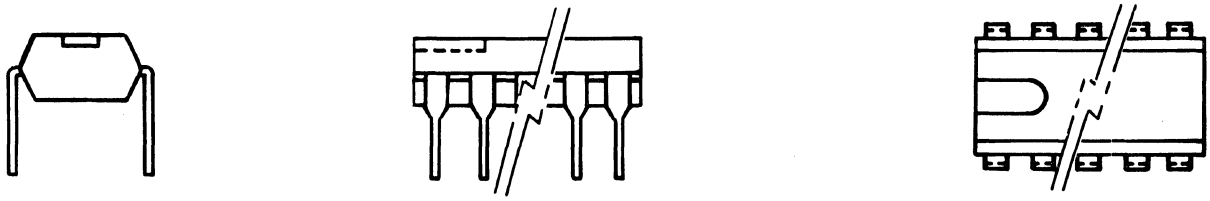

Dd

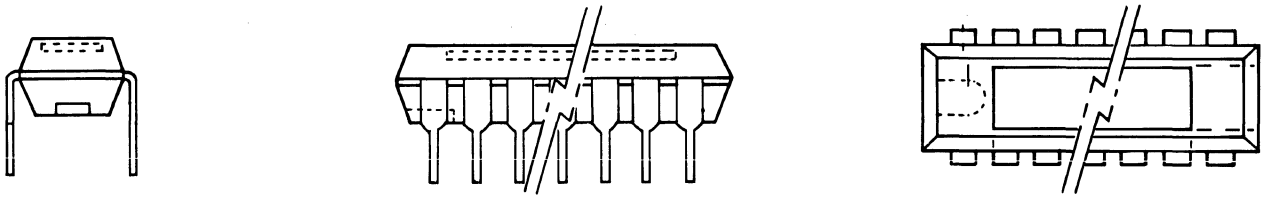

De

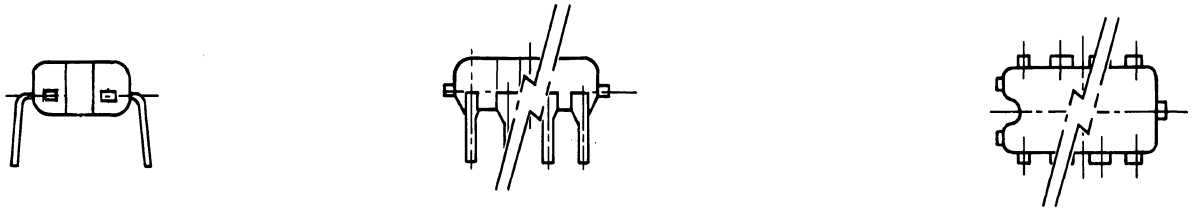

Df

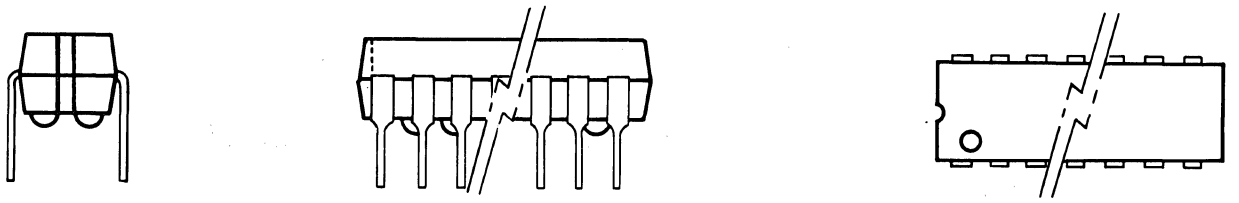

Dg

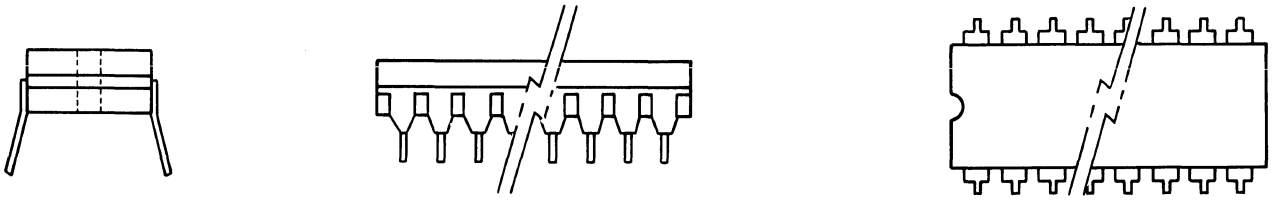

Dh

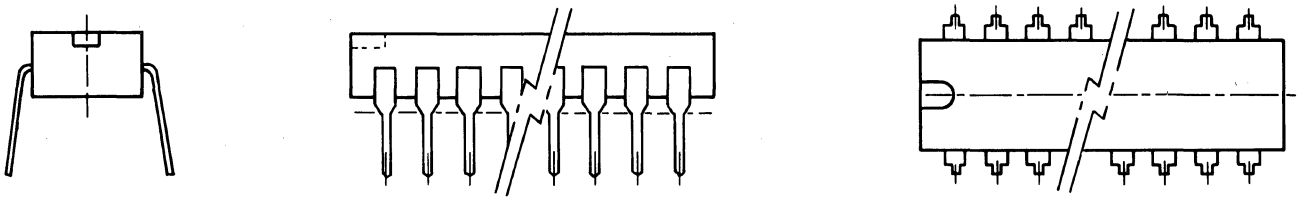

Di

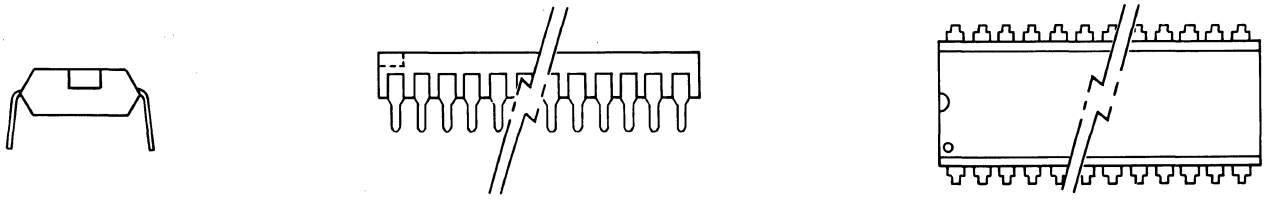

Dj

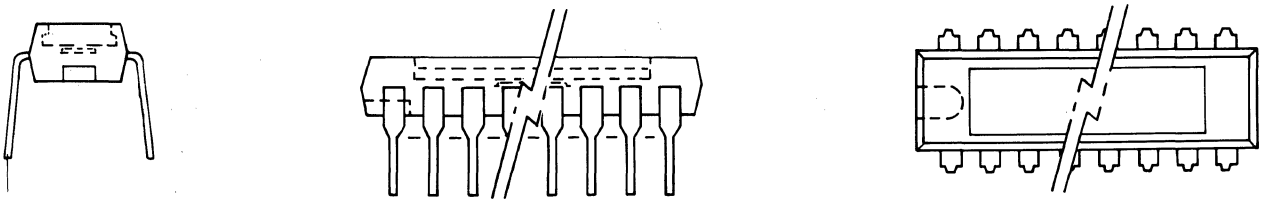

15. OUTLINE DRAWINGS

Dk

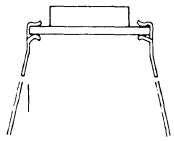

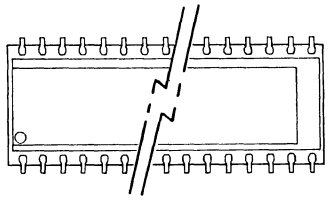

Dm

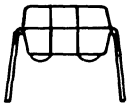

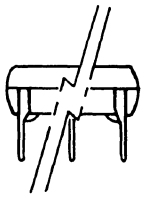

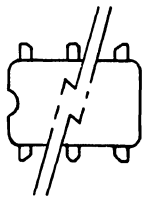

Dn

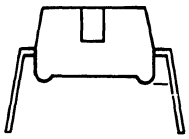

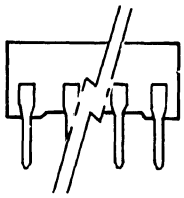

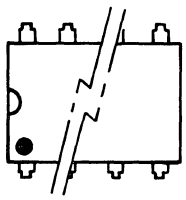

Dp

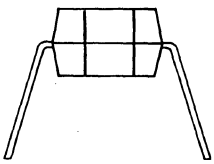

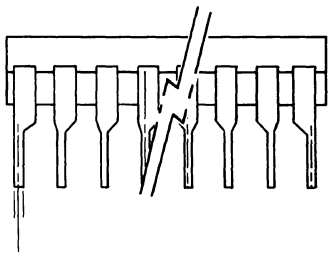

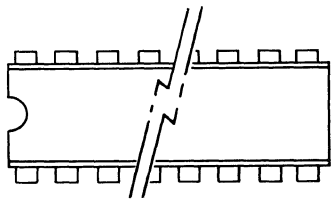

Dq

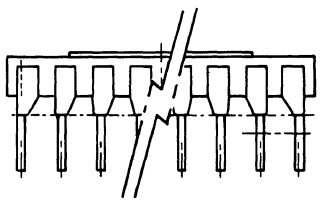

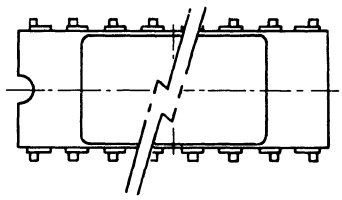

Dr

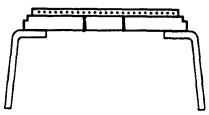

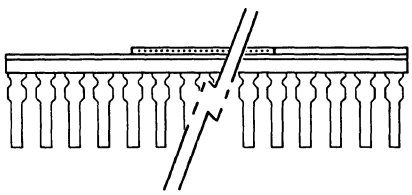

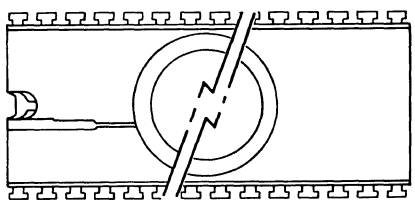

Ds

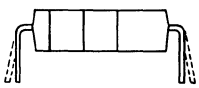

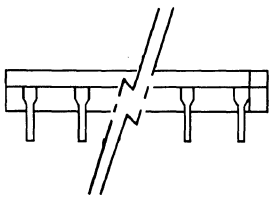

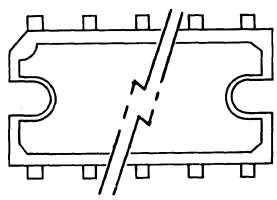

15. OUTLINE DRAWINGS

Dt

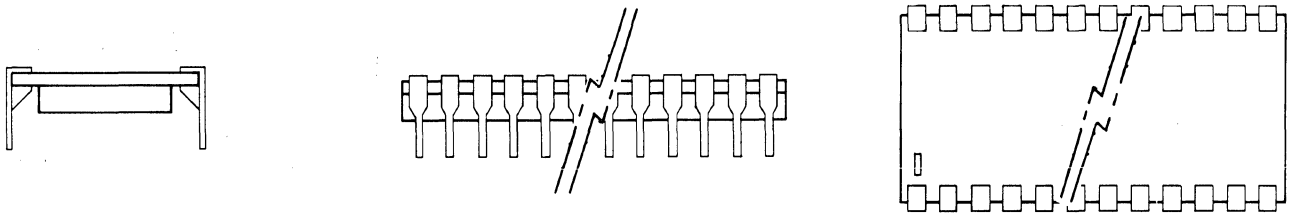

Du

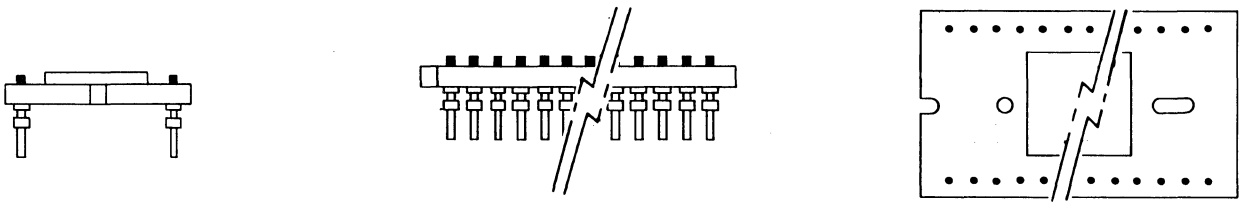

Dv

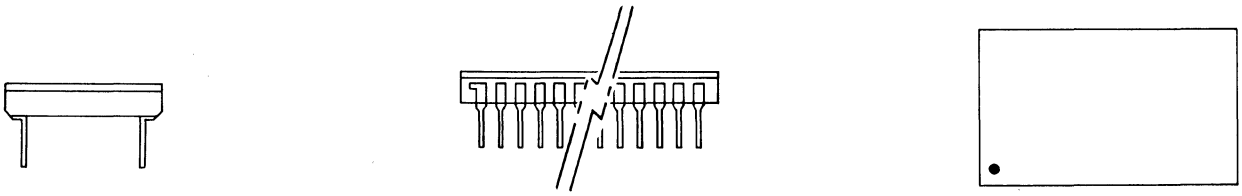

Dw

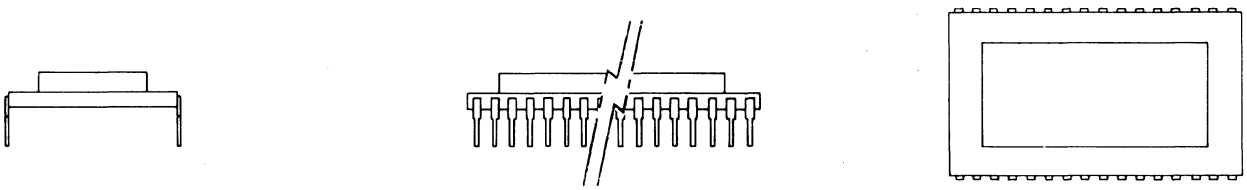

Dx

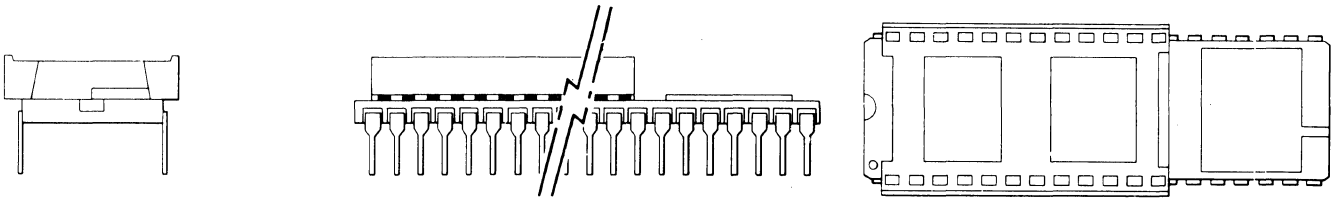

Dy

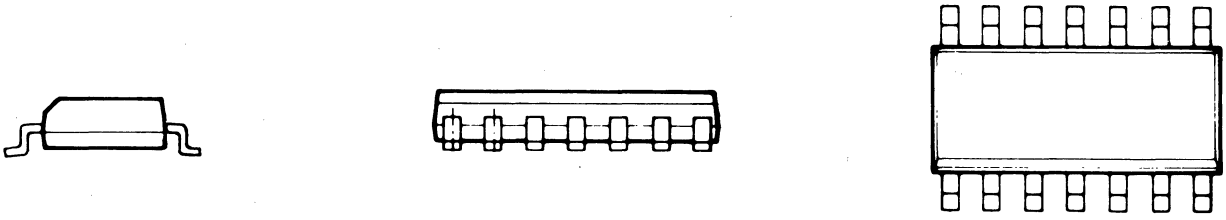

Dz

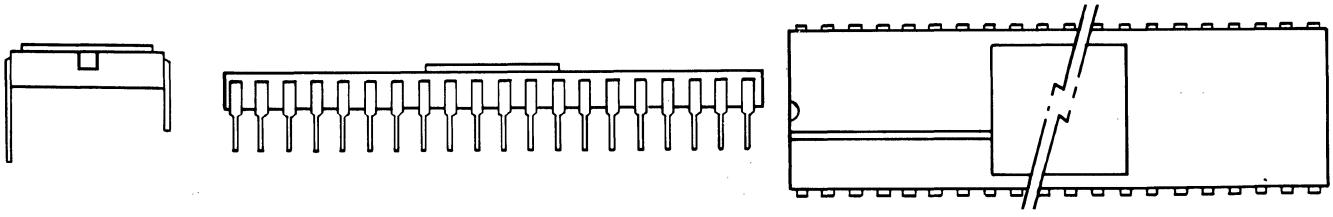

15. OUTLINE DRAWINGS

Qf

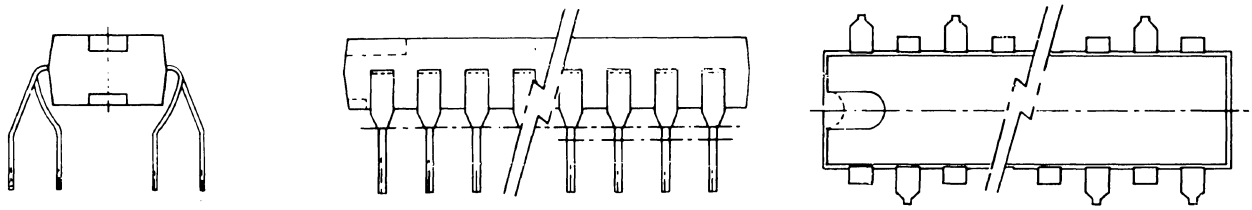

Qg

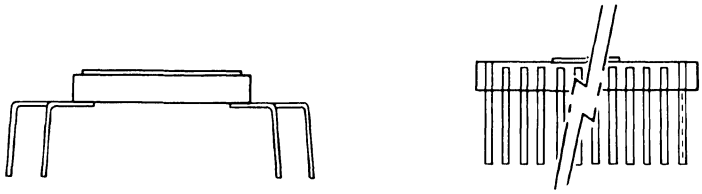

Qh

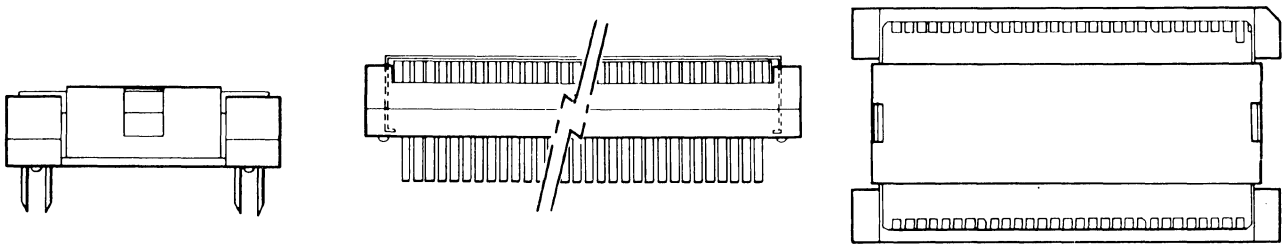

Qi

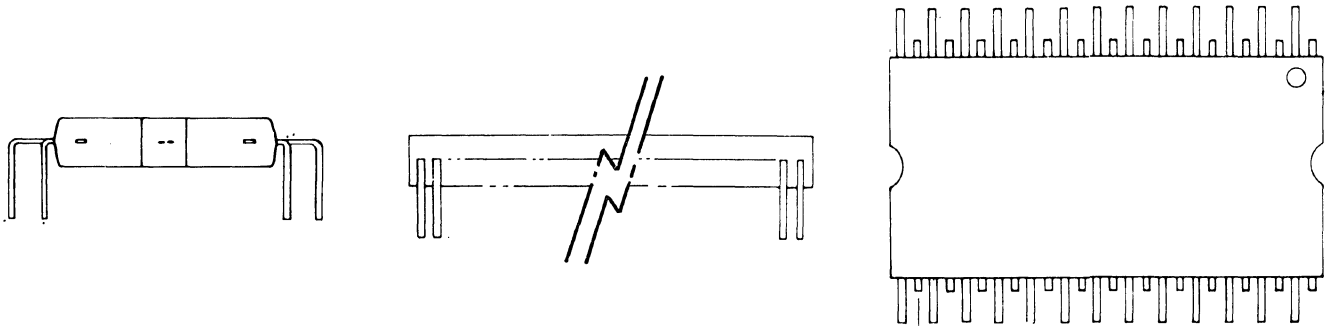

Qj

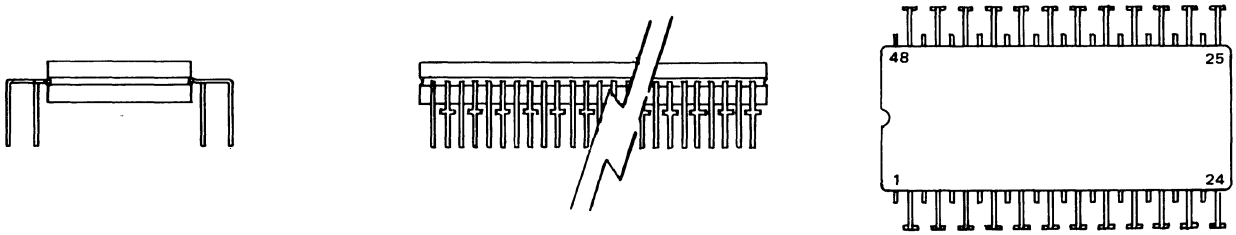

15. OUTLINE DRAWINGS

Daa

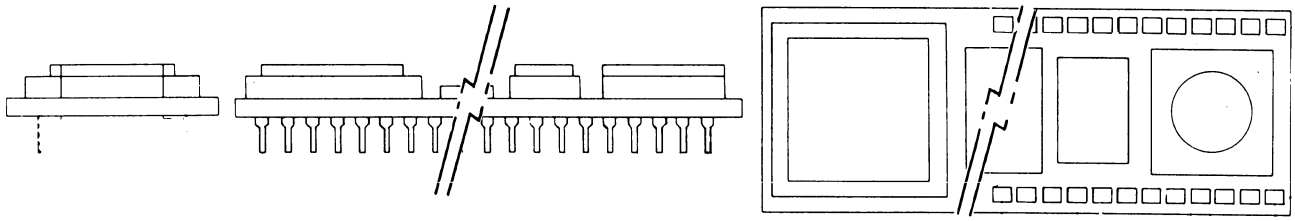

Dab

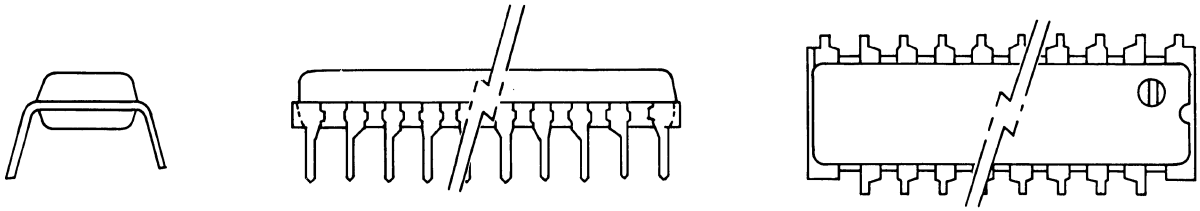

Qa

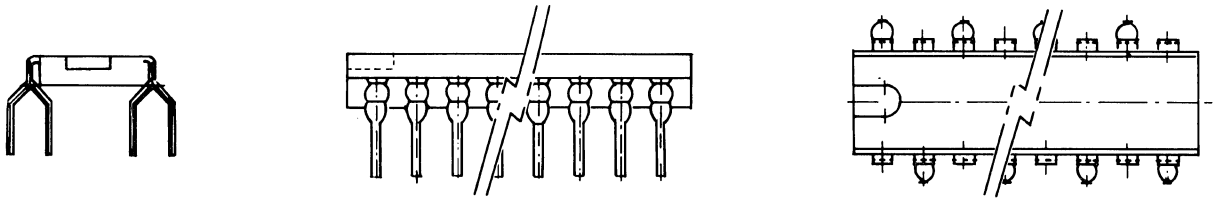

Qb

Qc

Qd

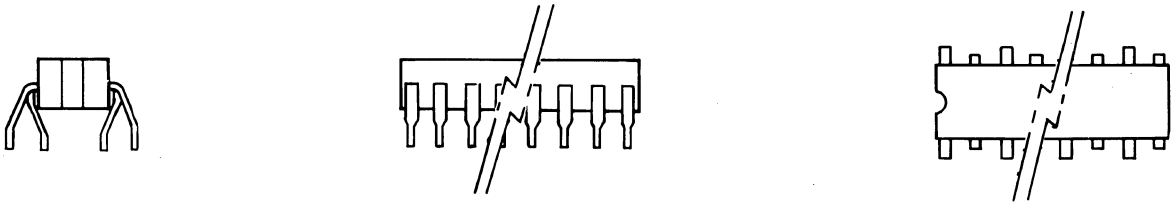

Qe

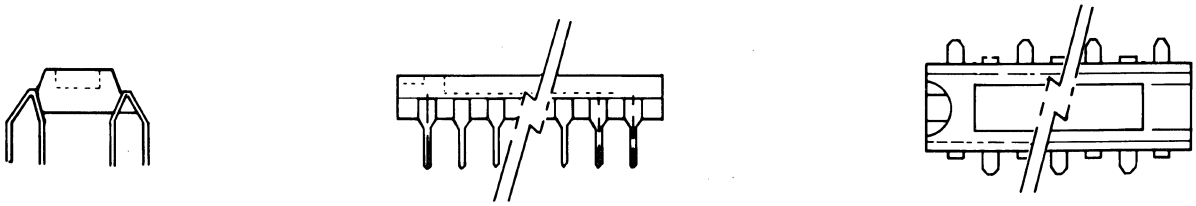

15. OUTLINE DRAWINGS

DL8

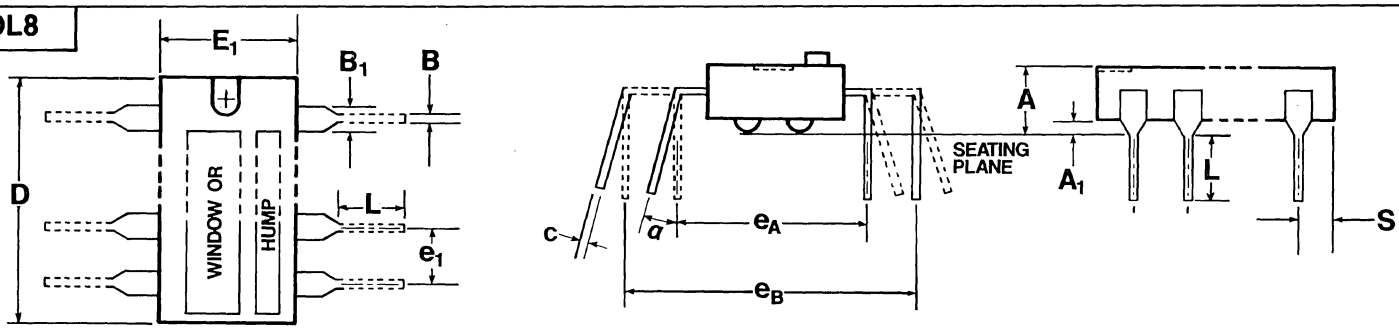

OUTLINE DRAWINGS SPECIFICATIONS TABLE

Dwg No. Suffix	In	mm	A	A_1	B	B_1	C	D	E_1	e_1	e_A	e_B	L	α	S	Dwg Style
DL8a		X	3.43 4.19	.51 .76	.38 .53	1.37 1.57	.20 .38	9.14 9.91	6.22 6.48	2.29 2.79	7.37 7.87	7.62 10.03	3.05 3.43		.64 1.14	Dp
DL8b		X	4.19 5.72	.51 1.02	.38 .58	.76 1.78	.20 .36	9.55 10.287	6.22 7.11	2.29 2.79	7.37 8.13	7.62 10.03	3.18 4.19			Dh

DL14

Dwg No. Suffix	In	mm	A	A_1	B	B_1	C	D	E_1	e_1	e_A	e_B	L	α	S	Dwg Style
DL14ad	X		.200	.015 min				.750 .785	.240 .280	.090 .110	.290 .310		.125			Dj

DL16

Dwg No. Suffix	In	mm	A	A_1	B	B_1	C	D	E_1	e_1	e_A	e_B	L	α	S	Dwg Style
DL16au	X		.200 max	.020 .070	.016 .020	.055 .065	.008 .012	.785 max	.291 max	.090 .110	.290 .320		.125 min		.050 max	Dp
DL16cj	X		.200 max	.015 min	.016 .020	.045 .065	.009 .011	.750 .785	.245 .271	.090 .110	.290 .310		.100 .165		.015 .045	Dp
DL16co		X	5.08 max	.381 nom	.406 .508	1.14 1.65	.229 .279	18.80 19.56	6.096 6.604	2.29 2.79	7.36 7.62		2.54 3.81		.635 nom	Dp
DL16cp	X		.170 .219	.020 min	.016 .020	.045 .065	.009 .011	.755 .785	.265 .291	.090 .110	.290 .310		.100 .165		.015 .045	Dp

DL18

Dwg No. Suffix	In	mm	A	A_1	B	B_1	C	D	E_1	e_1	e_A	e_B	L	α	S	Dwg Style
DL18h		X	4.19	.76	.38 .54	1.52	.20 .30	22.86	6.35	2.54 typ	7.62		3.18	0° 15°		Dc

DL28

Dwg No. Suffix	In	mm	A	A_1	B	B_1	C	D	E_1	e_1	e_A	e_B	L	α	S	Dwg Style
DL28p		X	5.1 max	0.5 min	0.45 0.55	1.5 max		35.5 35.9	13.70 14.00	2.54	15.24 16.44				1.3	Dc

15. OUTLINE DRAWINGS

DO1

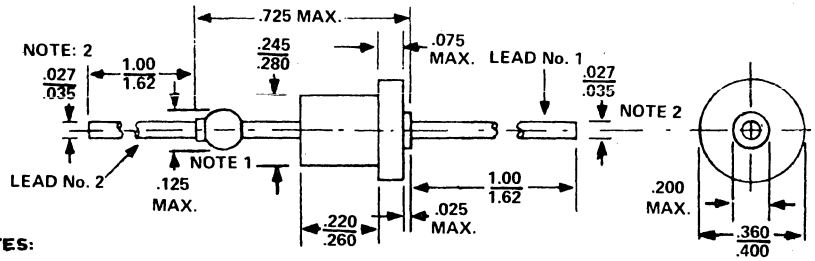

NOTES:

1. DIMENSION TO ALLOW FOR PINCH OR SEAL DEFORMATION ANYWHERE ALONG TUBULATION (OPTIONAL).
2. DIAMETER TO BE CONTROLLED FROM FREE END OF LEAD TO WITHIN .188" (4.78 MM) FROM THE POINT OF ATTACHMENT TO THE BODY. WITHIN THE .188 (4.78 MM) DIMENSION, THE DIAMETER MAY VARY TO ALLOW FOR LEAD FINISHES AND IRREGULARITIES.

DO2

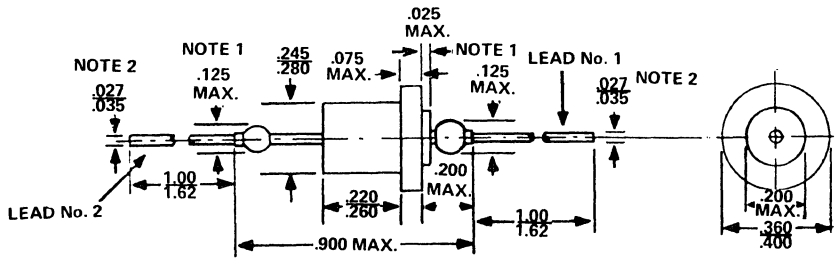

NOTES:

1. DIMENSION TO ALLOW FOR PINCH OR SEAL DEFORMATION ANYWHERE ALONG TUBULATION (OPTIONAL).
2. DIAMETER TO BE CONTROLLED FROM FREE END OF LEAD TO WITHIN .188" (4.78 MM) FROM THE POINT OF ATTACHMENT TO THE BODY. WITHIN THE .188" (4.78 MM) DIMENSION, THE DIAMETER MAY VARY TO ALLOW FOR LEAD FINISHES AND IRREGULARITIES.

DO3

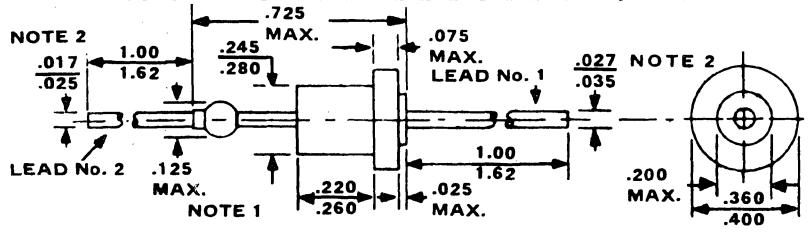

NOTES:

1. DIMENSION TO ALLOW FOR PINCH OR SEAL DEFORMATION ANYWHERE ALONG TUBULATION (OPTIONAL).
2. DIAMETER TO BE CONTROLLED FROM FREE END OF LEAD TO WITHIN .188" (4.78 MM) FROM THE POINT OF ATTACHMENT TO THE BODY. WITHIN THE .188" (4.78 MM) DIMENSION, THE DIAMETER MAY VARY TO ALLOW FOR LEAD FINISHES AND IRREGULARITIES.

DO4

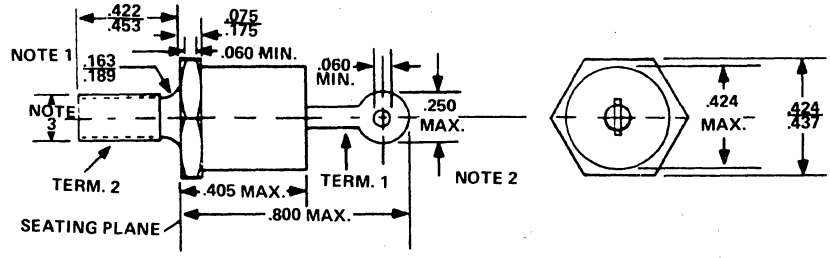

NOTES:

1. COMPLETE THREADS TO EXTEND TO WITHIN 2-1/2 THREADS OF SEATING PLANE.
2. ANGULAR ORIENTATION OF THIS TERMINAL IS UNDEFINED.
3. 10-32 UNF-2A MAXIMUM PITCH DIAMETER OF PLATED THREADS SHALL BE BASIC PITCH DIAMETER (.1697", 4.29 MM) REF. (SCREW THREAD STANDARDS FOR FEDERAL SERVICES 1957) HANDBOOK H28 P1.

15. OUTLINE DRAWINGS

DO5

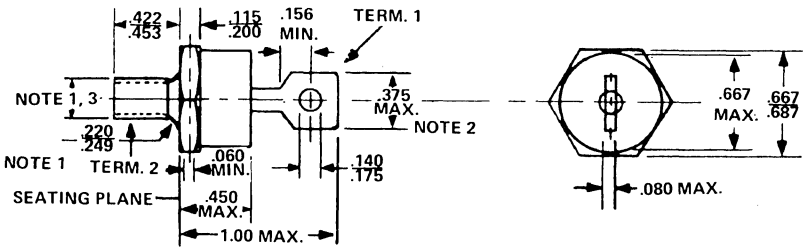

NOTES:

1. COMPLETE THREADS TO EXTEND TO WITHIN 2-1/2 THREADS OF SEATING PLANE.
2. ANGULAR ORIENTATION OF THIS TERMINAL IS UNDEFINED.
3. 1/4-28 UNF-2A. MAXIMUM PITCH DIAMETER OF PLATED THREADS SHALL BE BASIC PITCH DIAMETER (.2268", 5.74 MM) REF. (SCREW THREAD STANDARDS FOR FEDERAL SERVICES 1957) HANDBOOK H28 1957 P1.
4. MINIMUM FLAT.

DO7

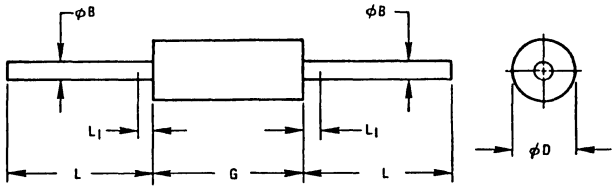

MILLIMETER DIMENSIONS ARE DERIVED FROM ORIGINAL INCH DIMENSIONS

SYMBOL	INCHES MIN.	INCHES MAX.	MILLIMETERS MIN.	MILLIMETERS MAX.	NOTES
ØB	.018	.022	0.458	0.558	-
ØD	.085	.107	2.16	2.71	1
G	.230	.300	5.85	7.62	1
L	1.000	-	25.40	-	-
L_1	-	.050	-	1.27	2

NOTES:

1. PACKAGE CONTOUR OPTIONAL WITHIN CYLINDER OF DIAMETER ØD AND LENGTH G. SLUGS, IF ANY, SHALL BE INCLUDED WITHIN THIS CYLINDER BUT SHALL NOT BE SUBJECT TO THE MINIMUM LIMIT OF ØD.
2. LEAD DIAMETER NOT CONTROLLED IN THIS ZONE TO ALLOW FOR FLASH, LEAD FINISH BUILD-UP, AND MINOR IRREGULARITIES OTHER THAN SLUGS.

DO8

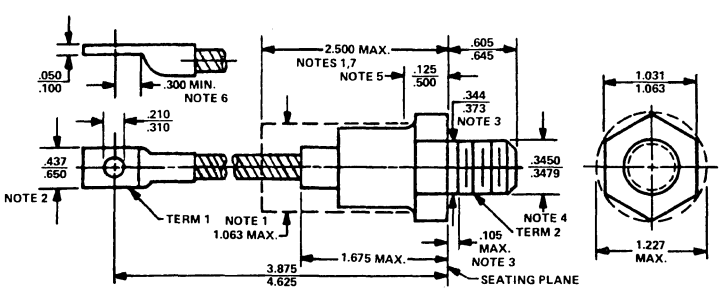

NOTES:

1. The device with exception of the hexagon, thread and flexible lead extension lies within the cylinder defined by Dim. 1.063 Max. and length 2.500 Max.
2. Angular orientation of terminal with respect to hexagonal portion is undefined. Square or radius on end of terminal is optional.
3. Length of incomplete or undercut threads of Dim. .344 Min. and .373 Max.
4. Pitch diameter of 3/8 –24 UNF-2A (coated) threads (ASA B1.1-1960).
5. A chamfer (or undercut) on one or both ends of the hexagonal portion is optional.
6. Minimum flat.
7. Seated height with lead bent at right angle.

DO9

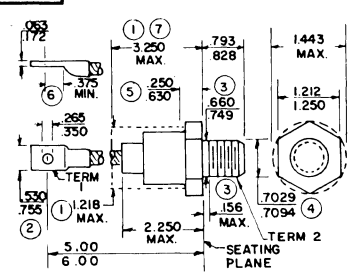

DO9 NOTES:

1. The device with exception of the hexagon, thread, and flexible lead extension lies within the cylinder defined by 1.218 and length 3.25.
2. Angular orientation of terminal with respect to hexagonal portion is undefined. Square or radius on end of terminal is optional.
3. Length of incomplete or undercut threads.
4. Pitch diameter of 3/4-16 UNF-2A (coated) threads (ASA B1.1-1960).
5. A chamfer (or undercut) on one or both ends of the hexagonal portion is optional.
6. Minimum flat.
7. Seated height with lead bent at right angle.

15. OUTLINE DRAWINGS

DO10

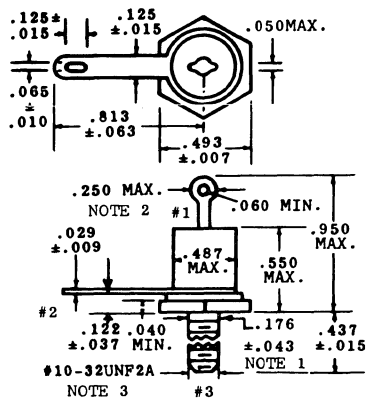

NOTES: (for DO10)

1. Complete threads to extend to within 2-1/2 threads of seating plane.
2. Angular orientation of terminals is undefined. Square or radius on ends of terminals is optional.
3. 10-32 UNF-2A. Maximum pitch dimeter of plated threads shall be basic pitch diameter (.1697) reference (screw thread standards for federal services 1957(handbook H28 1957 P1).

DO11

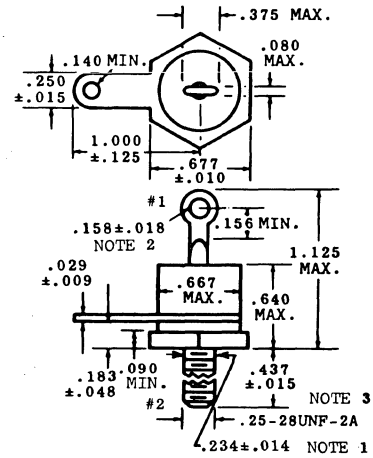

NOTES: (for DO11)

1. Complete threads to extend to within 2-1/2 threads of seating plane.
2. Angular orientation of terminals is undefined. Square or radius on ends of terminals is optional.
3. 1/4-28 UNF-2A. Maximum pitch dimeter of plated threads shall be basic pitch diameter (.2268) reference (screw thread standards for federal services 1957(handbook H28 1957 P1).

DO1

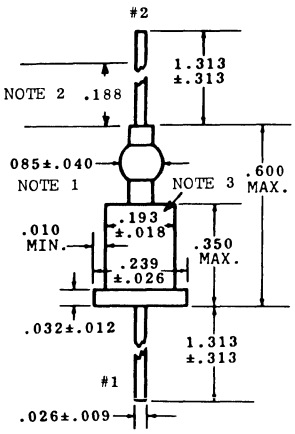

NOTES: (for DO12)

1. Dimension to allow for pinch of seal deformation anywhere along tabulation(optional).
2. Within this zone the diameter may vary to allow for lead finishes and irregularities.
3. Diameters ØD and $ØD_1$ shall differ by at least .010.

DO13

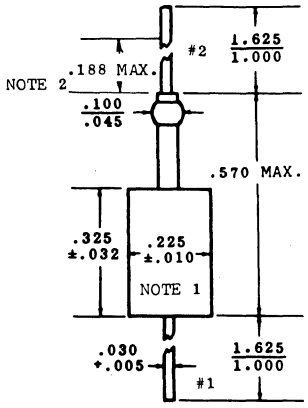

NOTES: (for DO13)

1. The major diameter is essentialy constant along its length.
2. Within this zone diameter may vary to allow for lead finishe and irregularities.
3. Dimension to allow for pinch or seal deformation anywhere along tabultion.

DO14

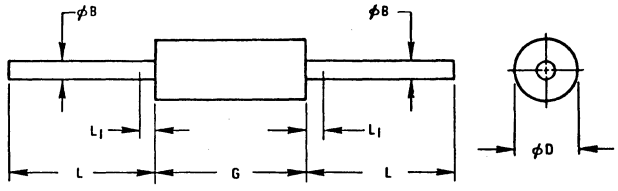

NOTES:

1. PACKAGE CONTOUR OPTIONAL WITHIN CYLINDER OF DIAMETER ØD AND LENGTH G. SLUGS, IF ANY, SHALL BE INCLUDED WITHIN THIS CYLINDER BUT SHALL NOT BE SUBJECT TO THE MINIMUM LIMIT OF ØD.
2. LEAD DIAMETER NOT CONTROLLED IN THIS ZONE TO ALLOW FOR FLASH, LEAD FINISH BUILD-UP, AND MINOR IRREGULARITIES OTHER THAN SLUGS.

MILLIMETER DIMENSIONS ARE DERIVED FROM ORIGINAL INCH DIMENSIONS

SYMBOL	INCHES MIN.	INCHES MAX.	MILLIMETERS MIN.	MILLIMETERS MAX.	NOTES
ØB	.018	.022	.458	.558	-
ØD	.108	.140	2.75	3.55	1
G	.230	.300	5.85	7.62	1
L	1.000	-	25.40	-	-
L_1	-	.050	-	1.27	2

15. OUTLINE DRAWINGS

DO15

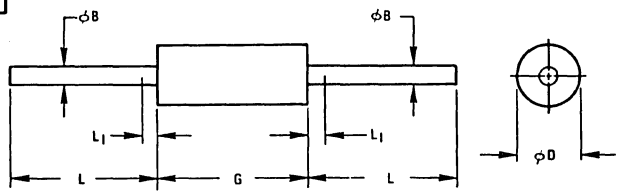

MILLIMETER DIMENSIONS ARE DERIVED FROM ORIGINAL INCH DIMENSIONS.

SYMBOL	INCHES MIN.	INCHES MAX.	MILLIMETERS MIN.	MILLIMETERS MAX.	NOTES
ØB	.027	.035	.686	.889	-
ØD	.104	.140	2.65	3.55	1
G	.230	.300	5.85	7.62	1
L	1.000	-	25.40	-	-
L_1	-	.050	-	1.27	2

NOTES:

1. PACKAGE CONTOUR OPTIONAL WITHIN CYLINDER OF DIAMETER ØD AND LENGTH G. SLUGS, IF ANY, SHALL BE INCLUDED WITHIN THIS CYLINDER, BUT SHALL NOT BE SUBJECT TO THE MINIMUM LIMIT OF ØD.
2. LEAD DIAMETER NOT CONTROLLED IN THIS ZONE TO ALLOW FOR FLASH, LEAD FINISH BUILD-UP, AND MINOR IRREGULARITIES OTHER THAN SLUGS.

DO17

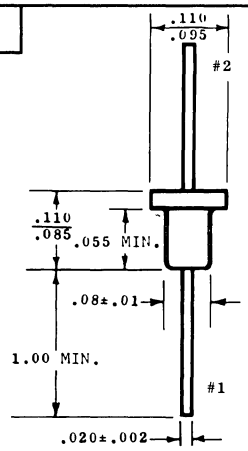

DO18

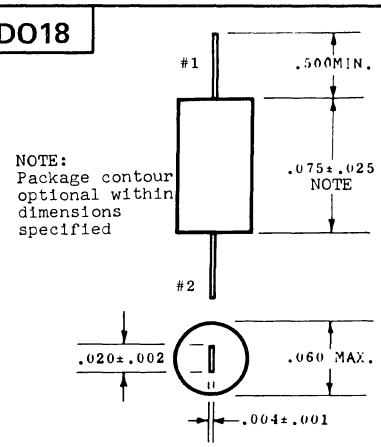

DO21

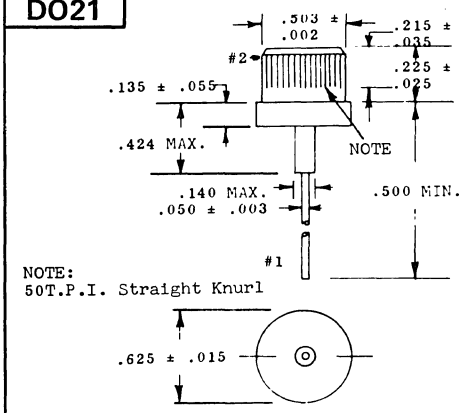

DO27

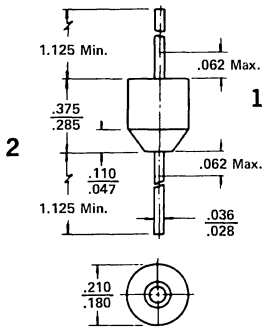

1. THIS END FOR VISUAL ORIENTATION ONLY (CONTOUR OPTIONAL).
2. LEAD DIAMETER NOT CONTROLLED IN THIS ZONE TO ALLOW FOR BODY FLASH AND LEAD FINISH BUILD-UP.

DO29

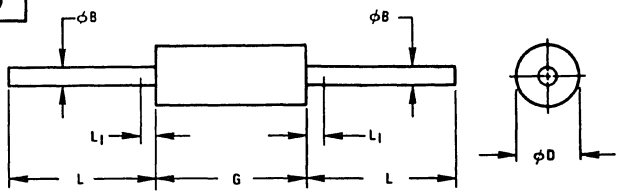

SYMBOL	INCHES MIN.	INCHES MAX.	MILLIMETERS MIN.	MILLIMETERS MAX.	NOTES
ØB	.029	.033	0.737	0.838	-
ØD	.120	.150	3.05	3.81	1
G	.315	.360	8.01	9.14	1
L	1.000	-	25.40	-	-
L_1	-	.050	-	1.27	2

NOTES:

1. PACKAGE CONTOUR OPTIONAL WITHIN CYLINDER OF DIAMETER ØD AND LENGTH G. SLUGS, IF ANY, SHALL BE INCLUDED WITHIN THIS CYLINDER, BUT SHALL NOT BE SUBJECT TO THE MINIMUM LIMIT OF ØD.
2. LEAD DIAMETER NOT CONTROLLED IN THIS ZONE TO ALLOW FOR FLASH, LEAD FINISH BUILD-UP, AND MINOR IRREGULARITIES OTHER THAN SLUGS.

MILLIMETER DIMENSIONS ARE DERIVED FROM ORIGINAL INCH DIMENSIONS.

15. OUTLINE DRAWINGS

DO30

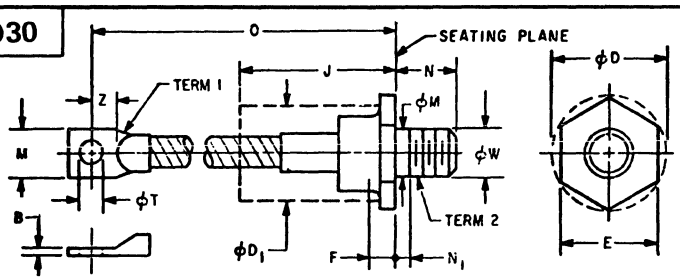

SYMBOL	INCHES MIN.	INCHES MAX.	MILLIMETERS MIN.	MILLIMETERS MAX.	NOTES
B	.035	.100	.89	2.54	1
ØD	-	1.227	-	31.16	-
$ØD_1$	-	1.031	-	26.18	2
E	1.031	1.063	28.19	27.00	-
F	.187	.500	4.8	12.7	3
J	-	2.500	-	63.50	2,4
M	.437	.650	11.1	16.5	1
ØM	.425	.499	10.80	12.67	5
N	.605	.645	15.37	26.38	-
N_1	-	.125	-	3.17	5
O	4.250	4.750	108.0	120.6	-
ØT	.260	.296	6.61	7.51	-
ØW	.4619	.4675	11.73	11.874	6
Z	.312	-	7.93	-	7

MILLIMETER DIMENSIONS ARE DERIVED FROM ORIGINAL INCH DIMENSIONS.

NOTES:
1. CONTOUR AND ORIENTATION OF TERMINAL LUG IS UNDEFINED.
2. THE BODY OF THE DEVICE, WITH THE EXCEPTION OF THE HEXAGON, THREAD, AND FLEXIBLE LEAD EXTENSION, LIES WITHIN THE CYLINDER DEFINED BY $ØD_1$ AND LENGTH J.
3. A CHAMFER (OR UNDERCUT) ON ONE OR BOTH ENDS OF THE HEXAGONAL PORTION IS OPTIONAL.
4. SEATED HEIGHT WITH THE LEAD BENT AT RIGHT ANGLE.
5. LENGTH OF INCOMPLETE OR UNDERCUT THREADS OF ØM.
6. PITCH DIA. OF 1/2-20 UNF-2A (COATED) THREADS (ASA B1.1-1960).
7. MINIMUM FLAT.

DO34

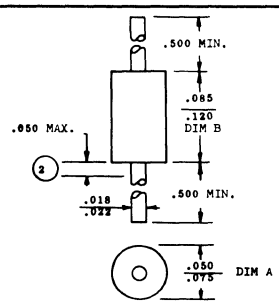

DO 34 NOTES:

1. Package contour optional within dimensions A & B. Slugs, if any, shall be included within this cylinder but shall not be subject to the minimum limit of Dim. A.
2. Lead diameter not controlled in this zone to allow for flash, lead finish build-up, and minor irregularities other than slugs.

DO35

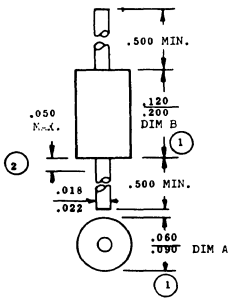

1. PACKAGE CONTOUR OPTIONAL WITHIN DIMENSIONS A & B. SLUGS, IF ANY, SHALL BE INCLUDED WITHIN THIS CYLINDER BUT SHALL NOT BE SUBJECT TO THE MINIMUM LIMIT OF DIM. A.
2. LEAD DIAMETER NOT CONTROLLED IN THIS ZONE TO ALLOW FOR FLASH, LEAD FINISH BUILD-UP, AND MINOR IRREGULARITIES OTHER THAN SLUGS.

DO39

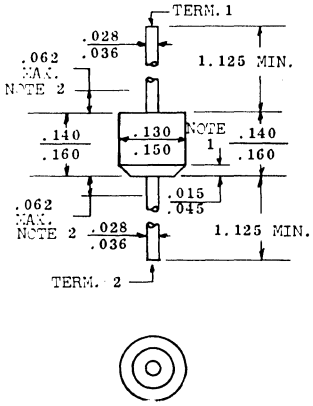

NOTES:
1. This end for visual orientation only (contour optional).
2. Lead diameter not controlled in this zone to allow for body flash and lead finish build-up.

DO41

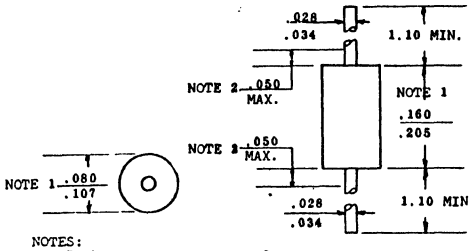

NOTES:
1. Package contour optional within cylinder of diameter .080/.107 and length .160/.205. Slugs if any, shall be included within this cylinder but shall not be subject to the minimum limit of .080/.107
2. Lead diameter not controlled in this zone to allow for flash, lead finish build up, and minor irregularities other than slugs.

E200/DO200

NOTES:

1. Refer to rules for dimensioning semiconductor product outlines included in Publication No. 76.
2. Package contour optional between Term. 1 and 2.
3. A step or other identifying feature shall be provided near Term. 2.
4. Minimum electrical creepage length between Term. 1 and 2.
5. Minimum electrical strike distance between Term. 1 and 2.
6. Surfaces flat within .0015 per inch.
7. Typical two places.

	A	B	C	D	E	F	G	H	NOTE
E200a/ DO200AA	1.42 / 1.70	.730 / 1.165	.300 / MIN	.250 / MIN	.490 / .600	.050 / .125	.123 / .145	.010 / .100	1,2
NOTES	2,3	6	4	5		7	7	7	
E200b/ DO200AB	2.20 / 2.50	1.031 / 1.500	1.00 / MIN	.750 / MIN	1.000 / 1.065	.050 / .160	.123 / .145	.030 / .110	1,2
NOTES	2,3	6	4	5		7	7	7	

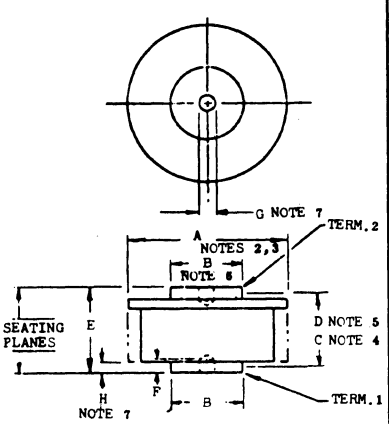

E201/DO201

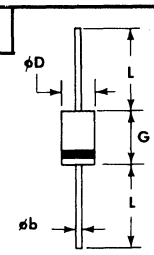

Dimensions in inches and (millimeters)

15. OUTLINE DRAWINGS

E203/DO203

SYMBOL	VARIATIONS					
	E203a/DO203AA		NOTE	E203b/DO203AB		NOTE
	MIN.	MAX.		MIN.	MAX.	
A	-	.405		-	.450	
b	-	.250	3	-	.375	3
c	-	-		-	-	
ØD	-	.505		-	.794	
$ØD_1$	.265	.424		-	.667	
E	.423	.438		.669	.688	
F_1	.075	.175	2	.115	.200	2
J	.600	.800		.750	1.000	
ØM	.163	.189		.220	.249	
N	.422	.453		.422	.453	
N_1	-	.078		-	.089	
S	-	-		.156	-	5
ØT	.060	.095		.140	.175	
ØW	10-32	UNF-2A	4	1/4-28	UNF-2A	4
NOTE	1			1		

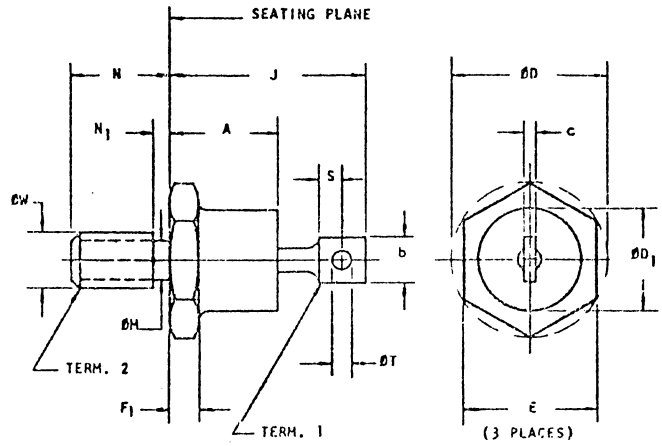

NOTES:

1. REFER TO APPLICABLE SYMBOL LIST.
2. CHAMFER OR UNDERCUT ON ONE OR BOTH ENDS OF HEXAGONAL BASE IS OPTIONAL.
3. ANGULAR ORIENTATION AND CONTOUR OF TERMINAL ONE IS OPTIONAL.
4. ØW IS PITCH DIAMETER OF COATED THREADS.

   REF: UNIFIED SCREW THREADS ANS B1.1-1960
5. MIN. FLAT.

E204/DO204

NOTES:

1. REFER TO APPLICABLE SYMBOL LIST.
2. DIMENSIONING AND TOLERANCING PER ANSI Y14.5, 1973.
3. PACKAGE CONTOUR OPTIONAL WITHIN ØD AND LENGTH G. HEAT SLUGS, IF ANY, SHALL BE INCLUDED WITHIN THIS CYLINDER, BUT SHALL NOT BE SUBJECT TO THE MINIMUM LIMIT OF ØD.
4. LEAD DIAMETER NOT CONTROLLED IN ZONES L_1 TO ALLOW FOR FLASH, LEAD FINISH BUILD-UP, AND MINOR IRREGULARITIES OTHER THAN HEAT SLUGS.
5. CONTROLLING DIMENSIONS: INCH.

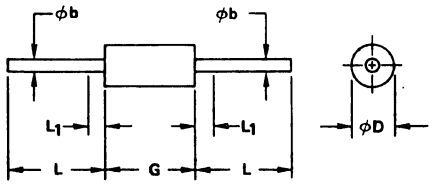

	ØB	ØD	G	L	L1	NOTES
E204a/	.018	.085	.230	1.000	.050	1,2,5
DO204AA	.022	.107	.300	1.500	MAX	
NOTES		3	3		4	
E204b/	.018	.108	.230	1.000	.050	1,2,5
DO204AB	.022	.140	.300	1.500	MAX	
NOTES		3	3		4	
E204c/	.027	.104	.230	1.000	.050	1,2,5
DO204AC	.035	.140	.300	1.500	MAX	
NOTES		3	3		4	
E204d/	.009	.050	.050	.450	.050	1,2,5
DO204AD	.013	MAX	.100	.750	MAX	
NOTES		3	3		4	
E204e/	.027	.220	.344	1.400	.080	1,2,5
DO204AE	.039	.260	.410	1.500	MAX	
NOTES		3	3		4	
E204f/	.029	.120	.315	1.000	.050	1,2,5
DO204AF	.033	.150	.360	1.500	MAX	
NOTES		3	3		4	
E204g/	.018	.050	.085	1.000	.050	1,2,5
DO204AG	.022	.075	.120	1.500	MAX	
NOTES		3	3		4	
E204h/	.018	.060	.120	1.000	.050	1,2,5
DO204AH	.022	.090	.200	1.500	MAX	
NOTES		3	3		4	
E204j/	.019	.085	.230	.450	.050	1,2,5
DO204AJ	.021	.105	.300	.550	MAX	
NOTES		3	3		4	
E204k/	.014	.065	.150	.450	.050	1,2,5
DO204AK	.016	.075	.175	.550	MAX	
NOTES		3	3		4	
E204l/	.028	.080	.160	1.000	.050	1,2,5
DO204AL	.034	.107	.205	MIN	MAX	
NOTES		3	3		4	
E204m/	.025	.050	.125	.690	.050	1,2,5
DO204AM	.036	.110	.205	1.500	MAX	
NOTES		3	3		4	
E204n/	.710	2.54	5.08	25.4	1.27	1,2,5
DO204AN	.860	3.05	5.84	MIN	MAX	
NOTES		3	3		4	
E204p/	.740	2.54	3.18	25.4	1.27	1,2,5
DO204AP	.890	3.81	4.57	38.1	MAX	
NOTES		3	3		4	

15. OUTLINE DRAWINGS

F3

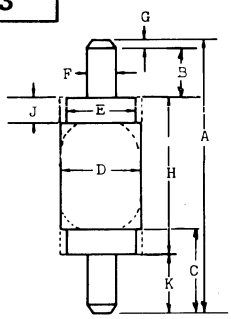

NOTE: DIM. E MAY EXTEND AS FAR AS DIM. D ON SOME DEVICES.

	A	B	C	D	E	F	G	H	J	K	CHAMFERED EDGES
F3p	.807	.188		.216		.093				.093	NO

F8

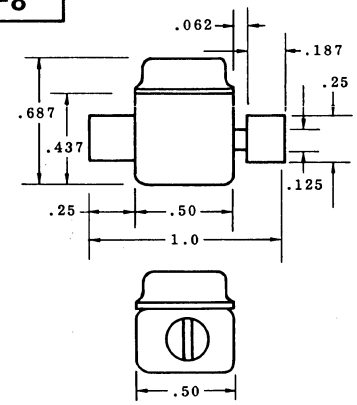

F10

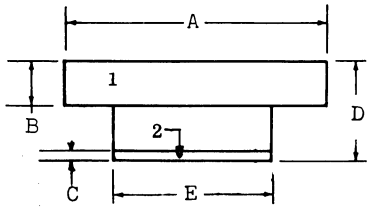

	A	B	C	D	E	1	2
F10af	.077 .083			.034	.047 .053	A	C

F12

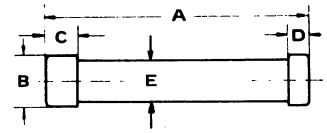

	A	B	C	D	E
F12r	1.813	.547	.563	.563	
F12s	2.50	.547	.563	.563	
F12t	4.313	.547	.563	.563	
F12u	6.063	.547	.563	.563	
F12v	2.00	.562	.500	.500	
F12w	2.50	.562	.500	.500	
F12x	3.00	.562	.500	.500	
F12y	3.50	.562	.500	.500	
F12z	4.00	.562	.500	.500	
F12aa	4.50	.562	.500	.500	
F12ab	5.00	.562	.500	.500	
F12ac	5.50	.562	.500	.500	
F12ad	6.00	.562	.500	.500	
F12ae	1.96	.374	.236	.157	
F12af	5.551 5.630	.780 .792	.270 .281	.270 .281	
F12ag	6.654 6.732	.780 .792	.270 .281	.270 .281	
F12ah	9.016 9.094	.780 .792	.270 .281	.270 .281	
F12aj	2.50	.540	.560	.560	
F12ak	3.00	.540	.560	.560	
F12am	3.50	.540	.560	.560	
F12an	4.00	.540	.560	.560	
F12ap	5.00	.540	.560	.560	
F12aq	6.00	.540	.560	.560	
F12ar	3.15	1.54	.197	.197	
F12as	2.36	.374	.236	.157	
F12at	2.94	.290	.160	.160	
F12au	2.73	.280	.160	.160	
F12av	1.80	.250	.250	.250	.235
F12aw	2.71 2.79	.485 .515	.345 .385	.345 .385	

F13

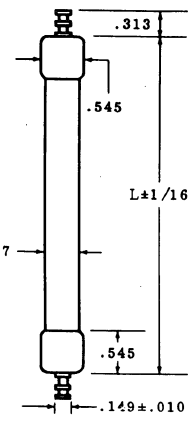

F13	L
a	1.813
b	2.50
c	4.313
d	6.063

F22

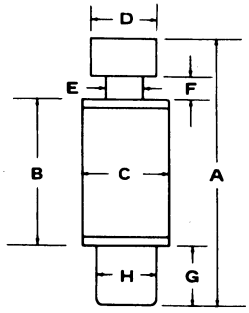

	A	B	C	D	E	F	G	H
F22	.975 1.03	.500 .540	.240 .260	.240 .260	.100 .140	.052 .072	.235 .260	.240 .260
F22a	1.46	.969	.400 MAX	.250	.120	.063	.250	.250
F22b	1.93	1.43	.400 MAX	.250	.120	.063	.250	.250
F22c	2.40	1.90	.400 MAX	.250	.120	.063	.250	.250
F22d	2.87	2.37	.400 MAX	.250	.120	.063	.250	.250
F22e	3.34	2.84	.400 MAX	.250	.120	.063	.250	.250
F22f	3.81	3.31	.400 MAX	.250	.120	.063	.250	.250
F22g, h	1.12	.500	.450 MAX	.250	.120	.063	.250	.250

15. OUTLINE DRAWINGS

F27

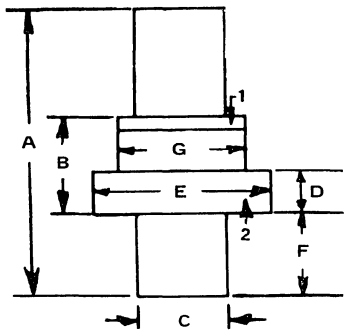

	A	B	C	D	E	F	G	1	2
F27	.175	.050	.062	.025	.123	.060 .064	.077 .083	C	A
F27a	.184	.058	.062	.020	.123	.060 .064	.077 .083	C	A
F27d	.212	.088	.062	.020	.123	.060 .064	.077 .083	C	A

F29

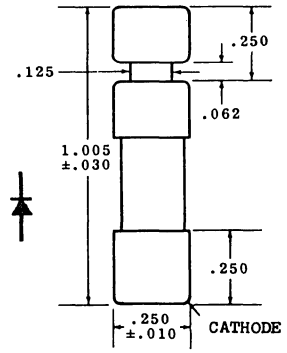

F42

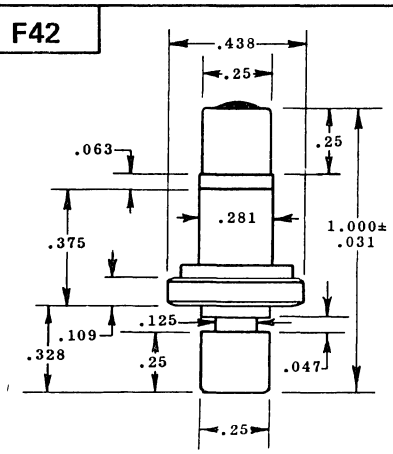

F51

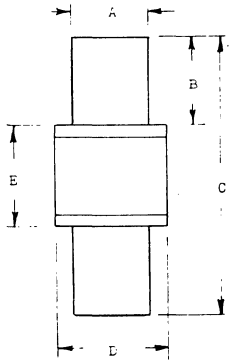

	A	B	C	D	E
F51	.060 .064	.060 .064	.190 .210	.080	.072 .080
F51a	.060 .064	.060 .064	.190 .210	.103	.072 .080
F51b	.250	.250	1.06	.380 MAX	.510 MAX
F51c	.059 .063	.059 .063	.169 .208	.077 .085	.070 .081

F56

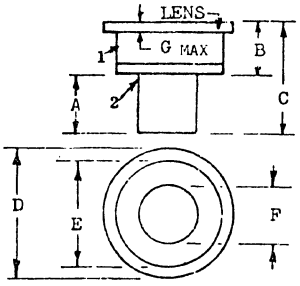

	A	B	C	D	E	F	G	1	2	WINDOW
F56	.030	.025	.055	.060	.050	.025				NA
F56a	.030	.045	.075	.060	.050	.025				NA
F56b	.062	.085	.122	.122	.080	.062	.025 MAX			NA
F56c	.030	.045	.075	.084	.050	.025	.015 MAX			NA
F56d	.022 .029	.021 .034	.045 .062	.068 .070	.046 .053	.023 .026	.011 MAX			NA
F56e		.117	.157	.122	.077 .083	.059 .065	.024	A	C	YES
F56f		.056	.118	.121	.077 .083	.059 .065	.020			
F56g		.084 .114	.145 .155	.119 .125	.077 .083	.059 .065	.022 MAX		C	
F56h		.058	.113 .127	.119 .125	.077 .083	.059 .065	.018		C	
F56j		.014 .071	.114 .135	.118 .123	.077 .083	.059 .065	.014 .023		C	
F56k	.180 .190	.165 MIN	.345 .375	.240 MAX	.205 .215	.092 .096	.015 .025			NA
F56m	.531	1.000 1.031	1.531 1.562	1.235 1.265	1.00	.343 .348	.219			NA
F56n	.059 .065	.070 .076	.149 .161	.117 .130	.077 .087	.060 .066	.020	C		NA
F56p	.060 .064	.054 .071	.114 .135	.117 .123	.078 .082	.060 .064		A	C	NA
F56q	.060	.083 .093	.148	.122	.077 .083	.060 .064	.025 MAX			NA
F56r	.060 .064	.059 .065	.119 .129	.117 .123	.075 .085	.060 .064	.025 MAX	A	C	NA
F56s	.060 .064	.088 .094	.148 .158	.117 .123	.075 .085	.060 .064	.025 MAX	A	C	NA
F56t	.059 .065	.091 .095	.150 .160	.117 .130	.077 .087	.060 .066	.019 .021	A	C	NA
F56u	.060 .064	.030 .043	.090 .107	.118 .123	.076 .083	.060 .064	.014 .023	C	A	NA
F56v	.060 .064	.055 .065	.115 .129	.117 .127	.077 .083	.060 .064	.025 MAX			NA
F56w	.060 .064	.080 .088	.146 .158	.117 .123	.077 .083	.060 .064	.020 .024	A	C	NA
F56x	.060 .064	.064 .065	.114 .128	.119 .124	.077 .083	.060 .064	.020 MAX	A	C	NA
F56y	.060 .064	.087 .097	.147 .161	.119 .125	.077 .083	.060 .064	.016 .024			NA
F56z	.030 TYP	.040 .050	.070 .080	.059 .069	.047 .053	.024 .026	.015 MAX			
F56aa	.030	.025	.055	.060	.050	.025		C	A	NO
F56ab	.030	.030	.060	.080	.050	.030	.012	C	A	NO
F56ac	.029 .031	.023 .032		.078 .082	.048 .052	.024 .026	.019	C	A	NA
F56ad	.600 .640	.103 MAX	.143 .163	.119 .124	.077 .083	.060 .064	.025 MAX			NA

F57

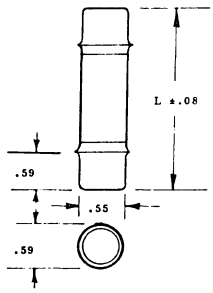

	L
F57a	2.60
F57b	1.90
F57c	4.50
F57d	6.10
F57e	2.50
F57f	1.81
F57g	4.31
F57h	6.06

F65

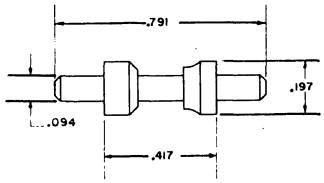

15. OUTLINE DRAWINGS

F73

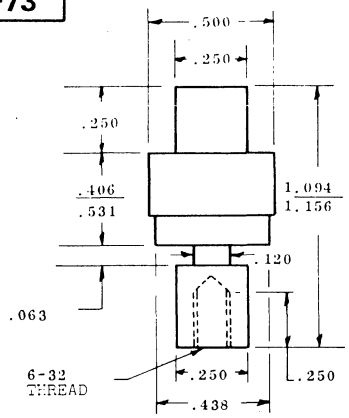

F76

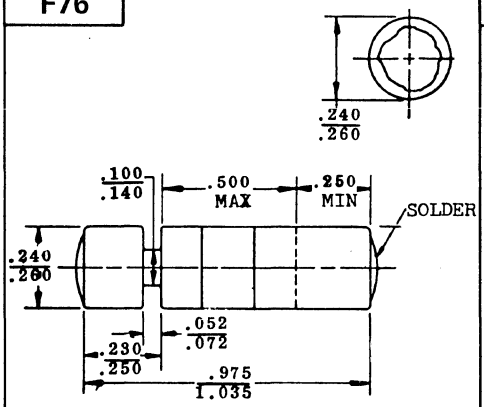

F82

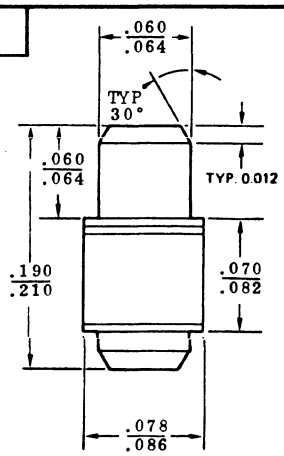

F86

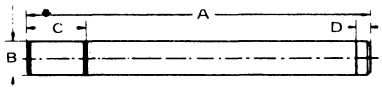

	A	B	C	D
F86	8.07	.779 .795	1.37	.314
F86a	10.2	.779 .795	1.37	.314
F86b	8.07	.708 .866	1.37	.314
F86c	5.59	.708 .866	1.37	.314
F86d	6.69	.708 .866	1.37	.314
F86e	10.2	.708 .866	1.37	.314
F86f	9.05	.708 .866	1.37	.314
F86g	4.88	.787	1.37	.314

F95

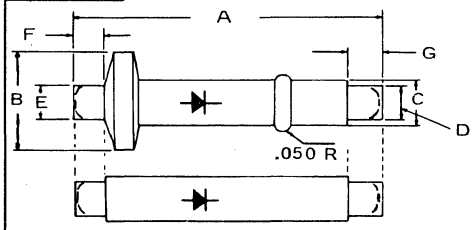

	A	B	C	D	E	F	G	CHAMFERED EDGES
F95	3.67 3.77	1.18	.470 .530	.356 .360	.356 .360	.380 .440	.380 .440	NO
F95a	3.75	1.18	.500	.360	.360	.430	.430	YES

F97

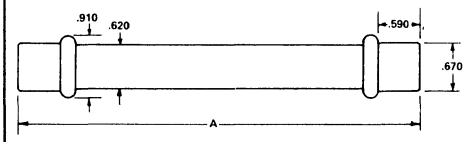

	A
F97	3.93
F97a	6.10
F97b	8.10

F99

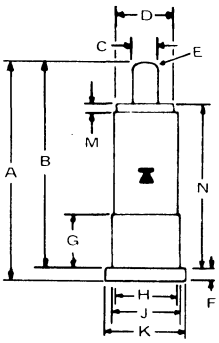

	A	B	C	D	E	F	G	H	J	K	M	N	REMARKS
F99	.800 .840	.753 .783	.092 .094	.195 .225	.030R .046R	.047 .057	.193 .199	.240	.246 .250	.292 .296	.030		
F99a	.799 .818typ		.092 .094typ			.051			.244 .284typ	.287 .295typ		.578 MAX	
F99b	.800 .840		.092 .094	.195 .215		.047 .057	.193 .199	.222 .240	.246 .250	.292 .296	.020 .030		Removable Base

F103

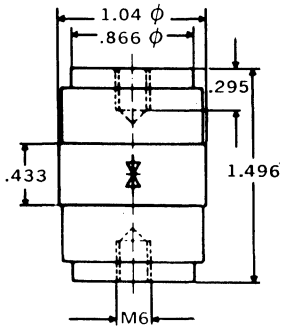

F107

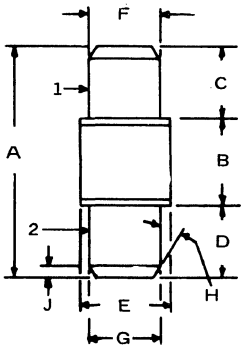

	A	B	C	D	E	F	G	H	J	1	2	REMARKS
F107	.190 .210	.070 .082	.060 .064	.060 .064	.077 .083	.060 .064	.060 .064	25° 30°	.010 .015			
F107a	.200 NOM	.070 .082	.060 .064	.060 .064	.086 MAX	.060 .064	.060 .064					Colored End Denotes Cathode

15. OUTLINE DRAWINGS

F108

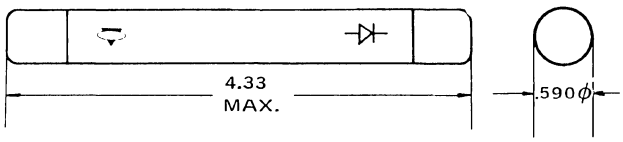

F109

	A
F109	4.724
F109a	5.708
F109b	6.889
F109c	7.874

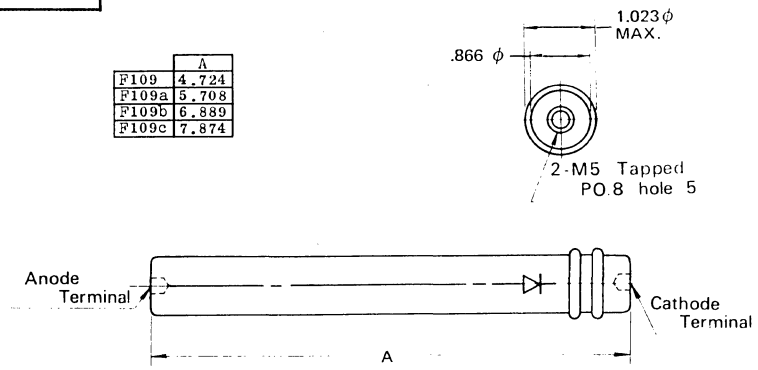

F119

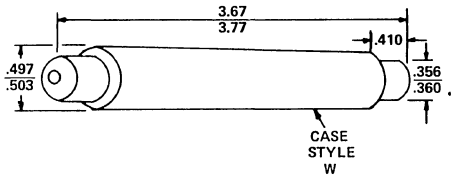

F122

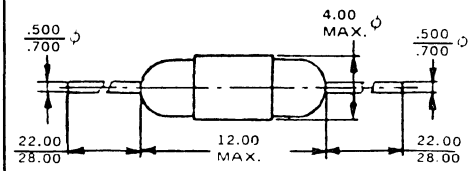

ALL DIMENSIONS IN "MM"

F123

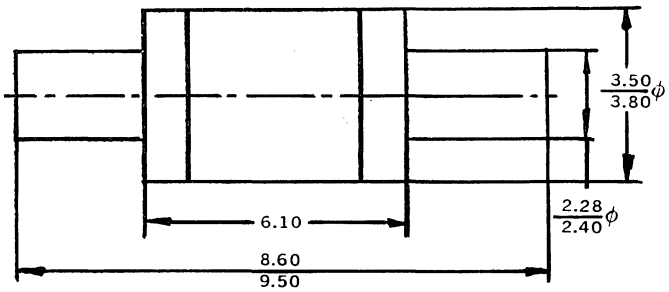

DIMENSIONS IN MM

F124

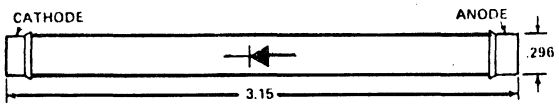

F125

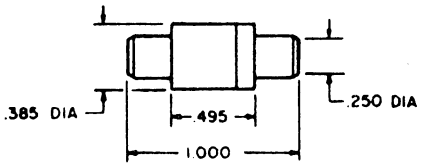

BAND DENOTES CATHODE

F128

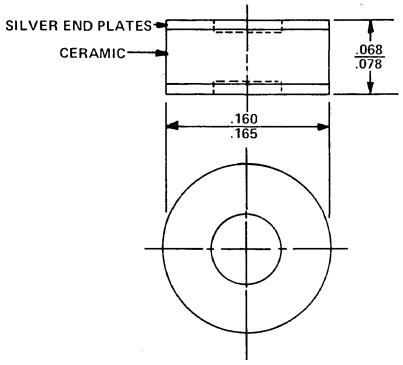

15. OUTLINE DRAWINGS

F129

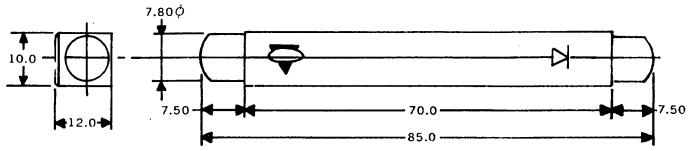

DIMENSIONS IN "MM"

F130

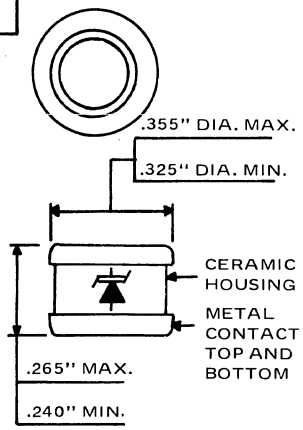

F131

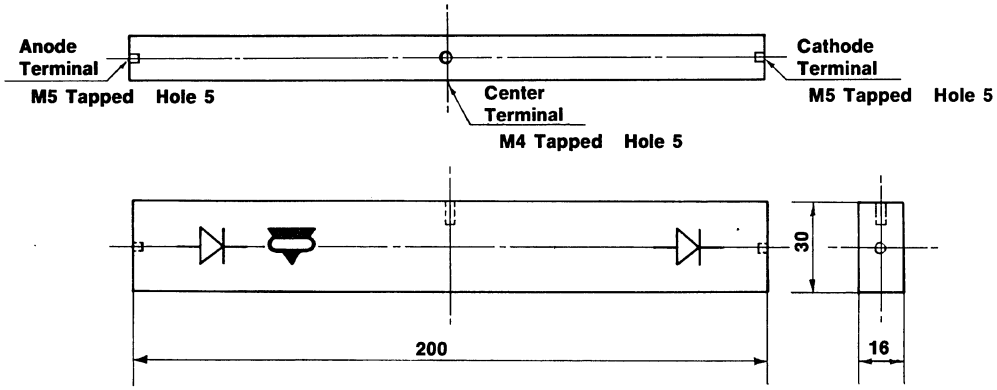

(Dimensions In "mm")

F132

(Unit:mm)

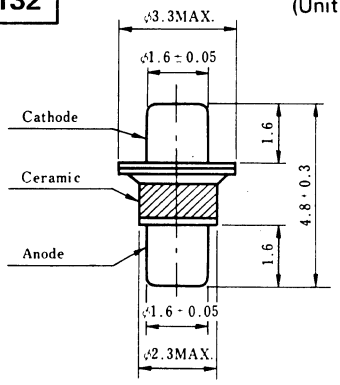

(C: 0.35pF)

F133

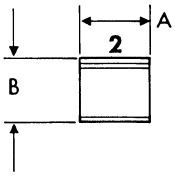

Suffix	A	B	1	2
F133	.055	.050		
F133a	.063 MAX	.040		
F133b	.030	.023		
F133c	.050	.020		
F133d	.053	.047		
F133e	.040	.025		
F133f	.035	.020		
F133g	.051 / .055	.040 / .050		
F133h	.022 / .027	.019 / .023		
F133j	.063 MAX	.040		
F133k	.024 / .027	.037 / .040		
F133l	.048 / .055	.040 / .050	C	A
F133m	.048 / .055	.040 / .050	A	C
F133n	.059	.125		

F134

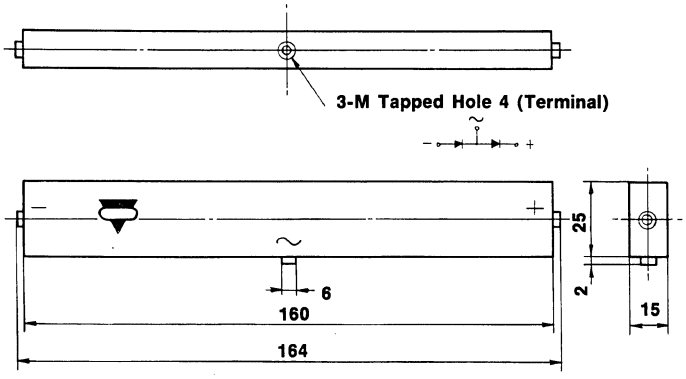

(Dimensions In "mm")

F135

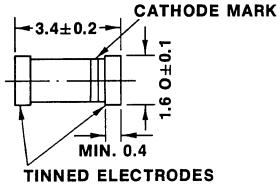

15. OUTLINE DRAWINGS

F136

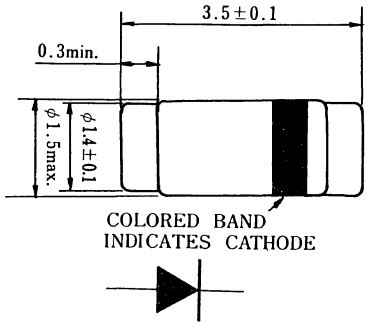

F137

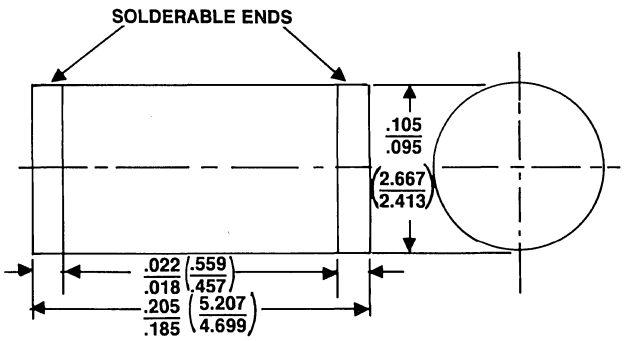

F138

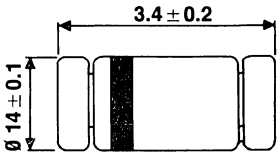

F139

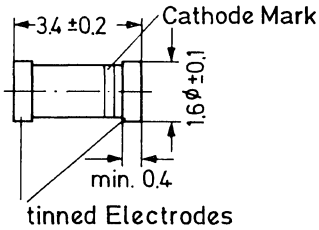

F140

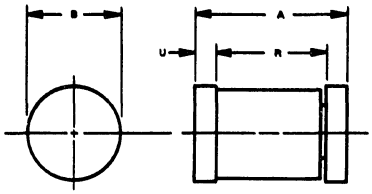

DIM	MILLIMETERS MIN	MILLIMETERS MAX	INCHES MIN	INCHES MAX
A	3.30	3.70	0.130	0.146
B	1.60	1.70	0.063	0.067
R	2.49	2.59	0.098	0.102
U	0.41	0.55	0.016	0.022

F141

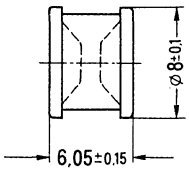

F142

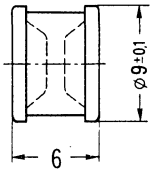

F143

Dimensions in mm

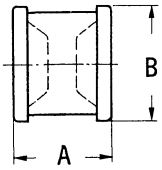

	A	B
F143a	6.5 / 7.5	8.9 / 9.1
F143b	7.2 / 7.8	8.9 / 9.1
F143c	7.7 / 8.3	8.9 / 9.1
F143d	5.9 / 6.2	7.7 / 8.1
F143e	7.6 / 8.2	7.6 / 8.2

F144

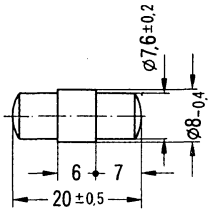

F145

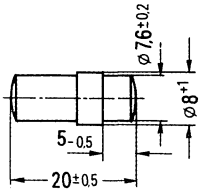

F146

Dimensions in mm

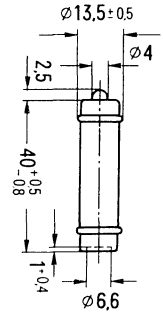

15. OUTLINE DRAWINGS

F147

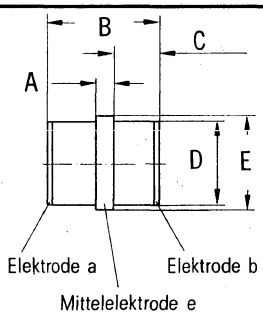

	A	B	C	D	E
F147a	1.4 / 1.6	9.7 / 10.3	4.1 / 4.4	7.0 / 7.4	7.9 / 8.1
F147b	1.4 / 1.6	11.1 / 11.9	4.8 / 5.2	8.1 / 8.5	9.3 / 9.7

F148

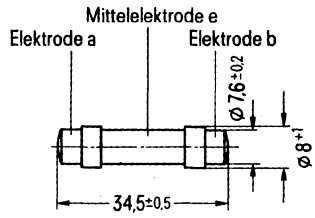

F149

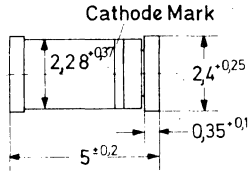

15. OUTLINE DRAWINGS

L6

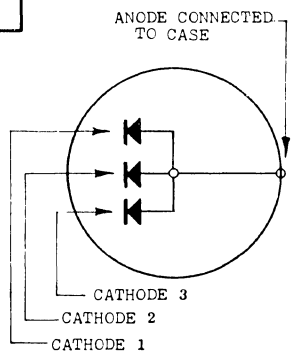

TO5 OUTLINE EXCEPT FOR LEAD ARRANGEMENT

L8

	LEAD 1	LEAD 2	LEAD 3	OUTLINE
L8	A1	K1,2	A2	TO92
L8a	A1	K1,2	A2	TO98
L8b	K	A	NO CONN.	TO1
L8c	A1	A2	K	TO46
L8d	K1	K2	A	TO46
L8e	A1	G	A2	TO98
L8f	A1	A22	G,CASE	TO18
L8g	K1	K2	A	TO92

M4

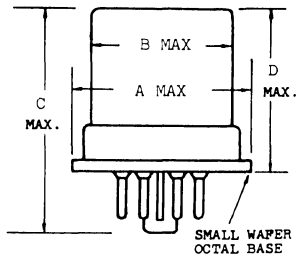

	A	B	C	D
M4	1.31	1.00	1.75	1.13
M4a	1.38		1.81	1.25
M4b	1.25	1.03	1.75	1.19

M9a

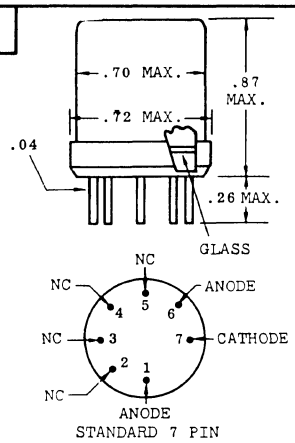

M12

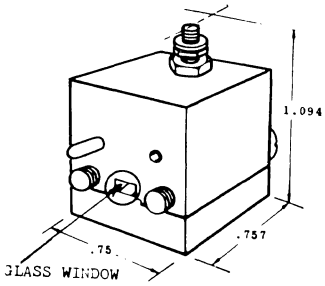

M13

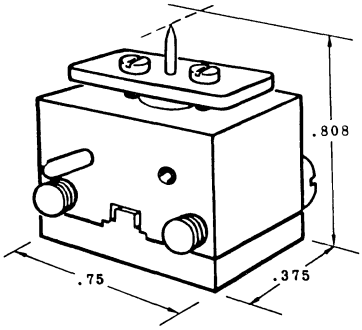

M21

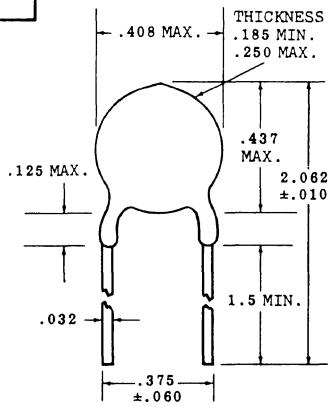

M22

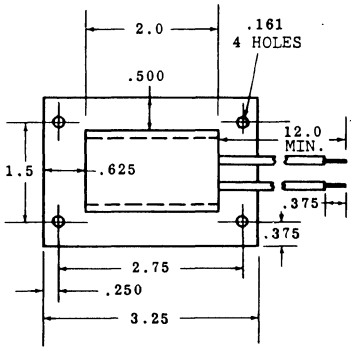

M26

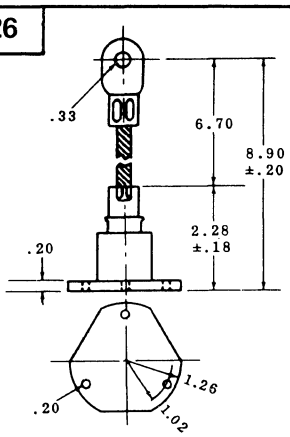

M38

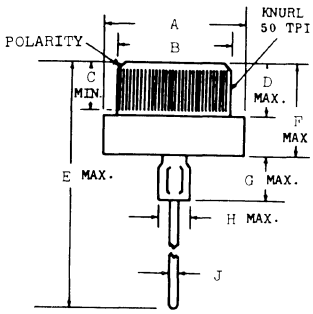

	A	B	C	D	E	F	G	H	J	POLARITY
M38	.625	.502	.188	.250	.938	.344			.050	ANODE
	.631	.504	MIN							
M38a	.615	.502	.225	.250	1.64	.420	.230	.140	.047	ANODE
	.625	.506	MIN						.053	
M38b	.615	.501	.140	.375	1.63	.375			.081	ANODE
	.625	.505	.150							
M38aa	.615	.502	.225	.250	1.64	.420	.230	.140	.047	CATHODE
	.625	.506							.053	
M38ab	.610	.501	.180	.200	.674	.080	.234	.140		
	.640	.505	.250	.250		.190				

15. OUTLINE DRAWINGS

M45

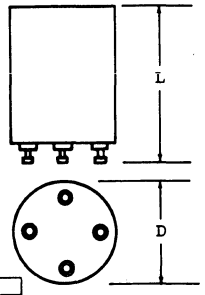

	D	L
M45a	.875	.250
M45b	1.125	1.25
M45c	1.125	.250
M45d	2.00	3.00
M45e	2.00	.375

M50

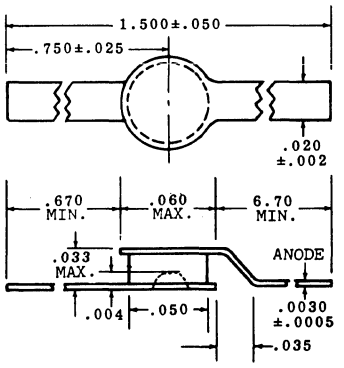

M54

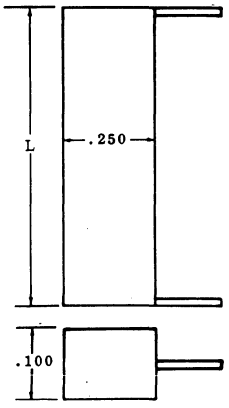

	L
M54a	.250
M54b	.350
M54c	.450
M54d	.550
M54e	.650
M54f	.750
M54g	.850
M54h	1.05
M54j	1.25
M54k	1.45
M54l	1.65
M54m	.950

M56

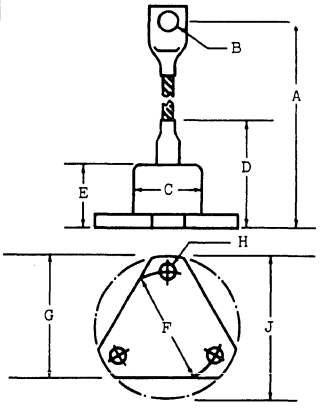

	A	B	C	D	E	F	G	H	J
M56	3.250	.203	.688	1.188	.656	1.250	1.344	.171	1.625
M56a	3.625	.266	1.250	1.656	.875	1.877	1.970	.203	2.250
M56b	5.250	.531	1.750	1.250	2.188	2.375	2.438	.203	2.750
M56c	3.625	.250 SCREW	1.250		.8594	1.875		.203	2.250
M56d	3.250	#10 SCREW	.6875		.625	1.250		.171	1.625
M56f	5.250	.500 BOLT	1.750		1.250	2.375		.203	2.750

M58

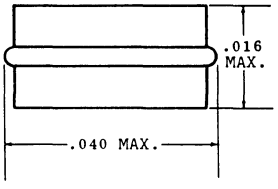

M62

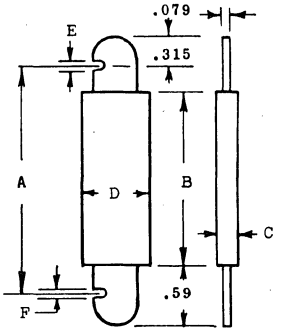

	A	B	C	D	E	F
M62	7.876	6.70	.472	1.00	.323	.244
M62a	7.876	6.70	.472	1.00	.323	.244
M62b	9.50	8.27	.630	1.00	.323	.244
M62c	7.876	6.70	.710	1.00	.354	.256
M62d	9.50	8.27	.710	1.00	.354	.256
M62e	9.50	8.27	.790	1.42	.354	.256
M62f	9.50	6.70	.472	1.00	.323	.244
M62g	7.876	6.69	.709	.984	354	276
M62h	9.45	8.27	.709	.984	354	276

M65

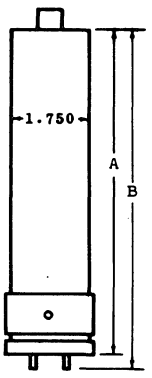

	A	B
M65	7.313	7.625
M65a	7.313	8.063
M65b	9.563	9.875

M66

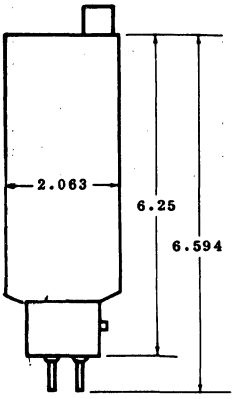

15. OUTLINE DRAWINGS

M76

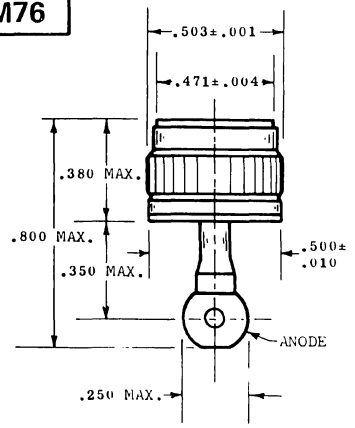

M80

NOTE:
BENT LEAD
AVAILABLE ONLY
WHEN DIM.
H IS GIVEN.

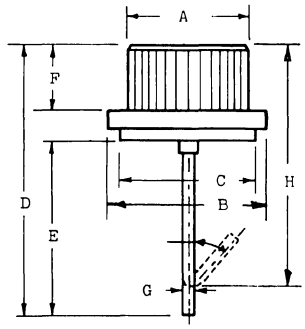

	A	B	C	D	E	F	G	H
M80	.503	.630	.551	1.21	.827	.275	.055	
M80a	.504	.626			1.38	.256	.051	1.26
M80b	.501 .505	.620 .630	.495 MAX	.800	.430	.250 MAX	.093	
M80c	.330 .350	.417 MAX	.114 MAX	.984 MIN	.699 MIN	.244 .248	.055 .062	NA

M82

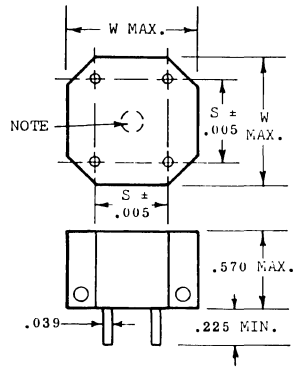

	W	S
M82	.380	.200
M82a	.690	.400
M82b	.815	.500
M82c	.940	.600

NOTE:
.140 HOLE OPTIONAL

M84

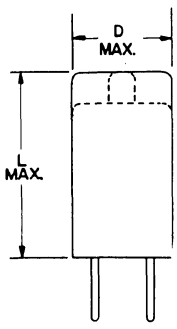

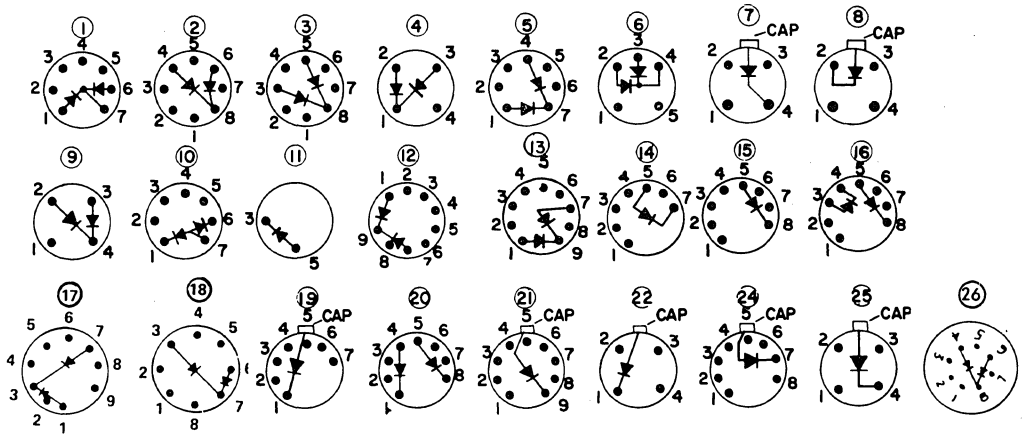

	D	L	BASE
M84	.870	1.75	1
M84a	1.25	2.65	2
M84b	1.25	2.65	3
M84c	1.25	2.65	4
M84d	.870	1.75	5
M84e	1.19	2.45	6
M84f	1.40	1.10	3
M84g	1.38	5.05	7
M84h	2.31	8.05	8
M84i	1.44	1.50	
M84j	2.31	8.18	8
M84k	1.25	2.65	9
M84m	.812	1.56	10
M84n	1.38	3.75	2
M84p	1.32	3.75	11
M84q	1.19	1.63	2
M84r		4.50	7
M84s	1.38	6.13	7
M84t	.750	1.63	1
M84u	1.25	2.06	2
M84v	.711	.593	2
M84w	2.00	.750	12
M84x	.840	2.00	13
M84y	1.20	4.20	7
M84z	2.40	7.90	7

	D	L	BASE	BASE TYPE
M84aa	.750	.750	10	OCTAL
M84ab	.750	.750	13	OCTAL
M84ac	.710	.855	14	7 Pin Min.
M84ad	1.38	1.12	15	OCTAL
M84ae	1.38	1.12	16	OCTAL
M84af	.710	.860	17	9 Pin Min.
M84ag	1.38	1.12	3	OCTAL
M84ah	.710	.860	12	9 Pin Min.
M84aj	1.38	1.12	18	OCTAL
M84ak	.820	1.95	19	7 Pin Min.
M84am	1.38	1.12	2	OCTAL
M84an	1.38	1.12	20	OCTAL
M84ap	.820	2.56	21	9 Pin Min.
M84aq	2.06	5.69	22	4 Pin Small
M84ar	3.00	7.00	22	4 Pin Medium
M84as	1.38	1.12	11	OCTAL
M84at	.820	2.56	8	9 Pin Min.
M84au	2.06	6.19	22	4 Pin Small
M84av	1.56	4.06	22	4 Pin Small
M84aw	2.06	5.53	7	4 Pin Jumbo
M84ax	2.31	8.18	8	4 Pin Jumbo
M84ay	2.31	7.38	8	5 Pin
M84az	2.88	10.7	8	4 Pin Jumbo
M84ba	1.32	3.75	24	OCTAL
M84bb	2.17	7.25	8	4 Pin

	D	L	BASE	BASE TYPE
M84bc	3.00	11.0	8	4 Pin Jumbo
M84bd	2.50	8.44	8	50W 4 Pin Jumbo
M84be	1.56	5.75	7	4 Pin Medium
M84bf	2.56	6.31	8	4 Pin Super Jumbo
M84bg	1.45	4.44	24	OCTAL
M84bh	2.06	6.25	22	4 Pin Medium
M84bj	2.06	6.25	8	4 Pin Medium
M84bk	2.13	6.75	8	4 Pin Super
M84bm	1.56	4.12	8	4 Pin Medium
M84bn	1.44	3.75	22	4 Pin Small
M84bp	1.56	4.12	22	4 Pin Medium
M84bq	2.98	9.13	8	4 Pin Super Jumbo
M84br	3.81	10.8	22	50W 4 Pin Jumbo
M84bs	2.50	8.88	25	50W 4 Pin Jumbo
M84bt	1.81	4.88	22	4 Pin Medium
M84bu	4.63	13.3	22	4 Pin
M84bv	2.31	7.38	22	4 Pin Medium
M84bw	2.06	5.53	7	4 Pin Small
M84bx	2.31	8.18	8	4 Pin Super Jumbo
M84by	2.88	10.6	8	4 Pin Super Jumbo
M84bz	.718 .782	1.500 1.562	1	7 Pin Min.
M84ca	3.88	9.65	8	OCTAL
M84cb	1.31	3.75	26	.563 Center Plug
M84cc	1.50	1.50	26	.625 Center Plug

15. OUTLINE DRAWINGS

M86

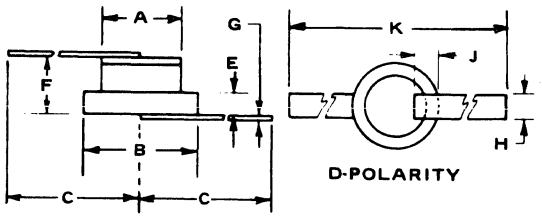

	A	B	C	D	E	F	G	H	J	K
M86	.075 .095	.119 .125	.500	ANODE	.020	.040 .060	.003	.050	.030	
M86a	.082 .088	.118 .122	.125	CATH.	.025	.060 .070	.003	.080	.060	
M86b	.081	.118	.125	ANODE	.025	.060			.060	
M86c	.750	.120				.094	.005	.047		
M86d	.077 .083	.117 .130	1.00	CATH.		.085 .095	.003	.080		
M86e	.077 .083	.117 .123	1.25 MIN	CATH.	.025 MAX	.089	.003	.080		2.50 MIN

M91

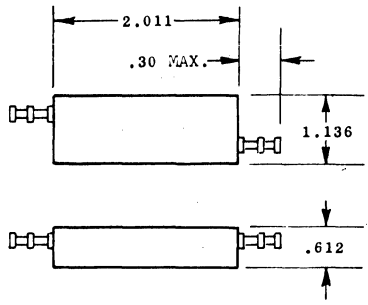

M92

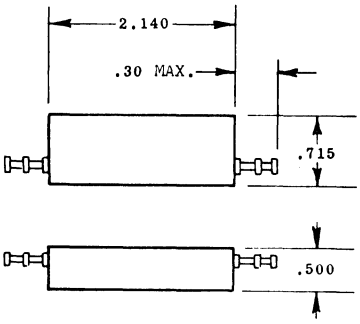

M101

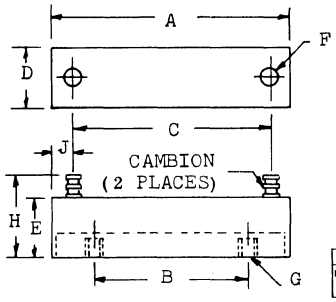

Suffix	A	B	C	D	E	F	G	H	J
M101w	2.985 3.015		2.110 2.140	.720 .750	.740 .770	10-32		1.140 max	

	A	B	C	D	E	F	G	H	J
M101	2.688	2.313	1.813	.563	.625	.169		1.10	GREATER THAN .180
M101a	3.00	2.115	2.460	.750	.750		10-32X.125MIN	1.10	.180 TYP
M101b	3.00 MAX	2.11 2.13		.750 MAX	.750 MAX	.113	10-32X.125MIN	1.10 MAX	.018
M101c	2.00 MAX	NA	1.00 MAX	.500	.500	6-32UNC-2B	NA	.500	.250
M101d	2.50 MAX	NA	1.50 MAX	.500	.500	6-32UNC-2B	NA	.500	.250
M101e	3.50 MAX	NA	2.50 MAX	.500	.500	6-32UNC-2B	NA	.500	.250
M101f	4.50 MAX	NA	3.50 MAX	.500	.500	6-32UNC-2B	NA	.500	.250
M101g	1.57 1.63	1.01 TYP	.380 MAX	.997 1.00	.997 1.00	6-32UNC-2B		.997 1.00	.310 TYP
M101h	2.32 2.38	1.76 TYP	1.13 MAX	.997 1.00	.997 1.00	6-32UNC-2B		.997 1.00	.310 TYP
M101J	3.19 3.25	2.63 TYP	2.00 MAX	.997 1.00	.997 1.00	6-32UNC-2B		.997 1.00	.310 TYP
M101k	4.44 4.50	3.88 TYP	3.25 MAX	.997 1.00	.997 1.00	6-32UNC-2B		.997 1.00	.310 TYP
M101m	5.44 5.50	4.88 TYP	4.25 MAX	.997 1.00	.997 1.00	6-32UNC-2B		.997 1.00	.310 TYP
M101n	6.94 7.00	6.38 TYP	5.75 MAX	.997 1.00	.997 1.00	6-32UNC-2B		.997 1.00	.310 TYP
M101p	8.19 8.25	7.63 TYP	7.00 MAX	.997 1.00	.997 1.00	6-32UNC-2B		.997 1.00	.310 TYP
M101q	10.19 10.25	9.63 TYP	9.00 MAX	.997 1.00	.997 1.00	6-32UNC-2B		.997 1.00	.310 TYP
M101r	11.94 12.00	11.38 TYP	10.75 MAX	.997 1.00	.997 1.00	6-32UNC-2B		.997 1.00	.310 TYP
M101s	13.19 13.25	12.63 TYP	12.00 MAX	.997 1.00	.997 1.00	6-32UNC-2B		.997 1.00	.310 TYP
M101t	14.94 15.00	14.38 TYP	13.75 MAX	.997 1.00	.997 1.00	6-32UNC-2B		.997 1.00	.310 TYP
M101u	16.19 16.25	15.63 TYP	15.00 MAX	.997 1.00	.997 1.00	6-32UNC-2B		.997 1.00	.310 TYP
M101v	19.94 25.00	24.38 TYP	23.75 MAX	.997 1.00	.997 1.00	6-32UNC-2B		.997 1.00	.310 TYP

M105

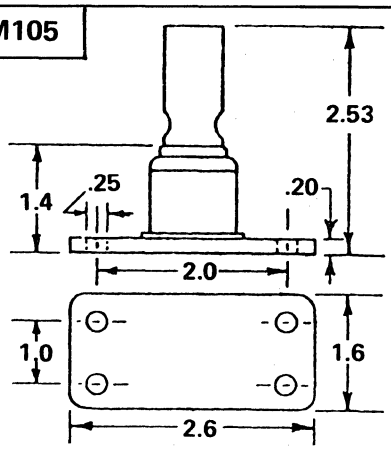

M106

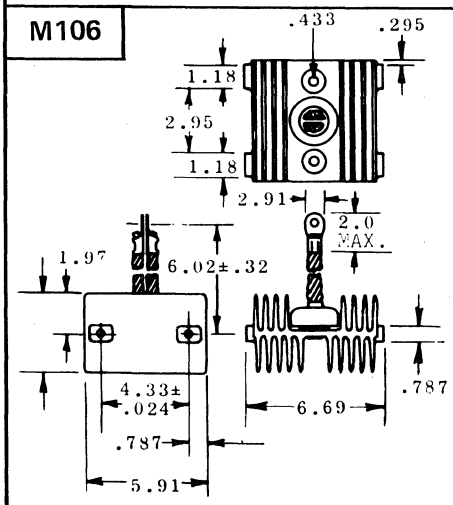

M117

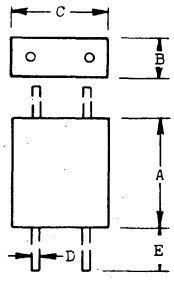

	A	B	C	D	E
M117	.445	.172	.30 MAX	.021 MAX	1.10 MIN
M117a	.34 ±.01	.14 ±.01	.30 MAX	.021 MAX	1.10 MIN
M117b	.468	.20	.312	.021 MAX	1.10 MIN
M117c	1.25	.630	1.50	.021 MAX	1.10 MIN
M117d	.472	.315	.394	.021 MAX	1.10 MIN
M117e	.435 .455	.162 .182	.280 .300	.019 .021	1.00 1.50
M117f	.435 .455	.162 .182	.280 .300	.019 .021	.900 1.50
M117g	.565 MAX	.285 MAX	.565 MAX	.030	
M117h	.630	.295	.394	.031	.787

15. OUTLINE DRAWINGS

M118

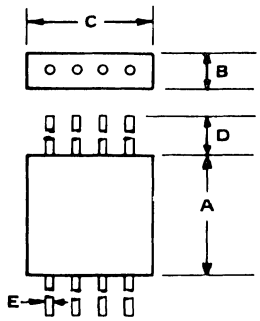

	A	B	C	D	E
M118	.435	.162	.480	1.00	.019
	.455	.182	.500	1.50	.021
M118a	.435	.162	.480	.900	.019
	.455	.182	.500	1.50	.021

M122

	A	B	C	D	E	F
M122a	.832	.40	.532	.812	.265	.020
M122b	1.032	.80	.532	.812	.265	.020
M122c	1.432	1.20	.532	.812	.265	.020
M122d	1.832	1.60	.532	.812	.265	.020
M122e	1.000	.80	.532	.812	.265	.020
M122f	1.380	1.20	.532	.812	.265	.020
M122g	2.000	1.80	.532	.812	.265	.020
M122h	.500		.312	1.00	.625	.032
M122i	1.0	0.6	0.65	0.75 min	0.38 0.42	0.05

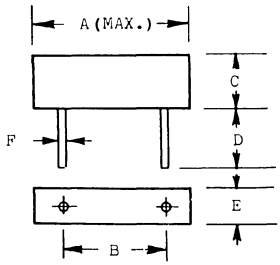

M123

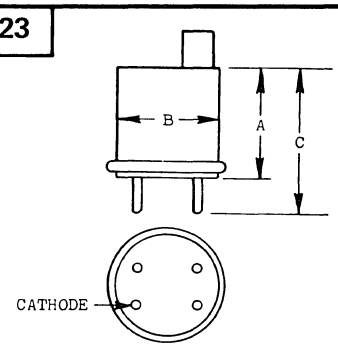

	A	B	C
M123	3.5	1.219	4.313
a	4.438	1.219	5.125

M124

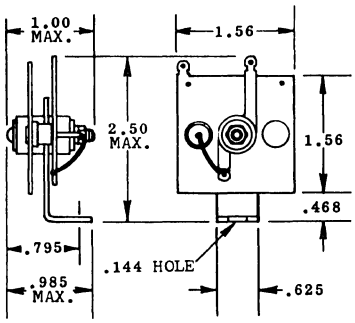

M125

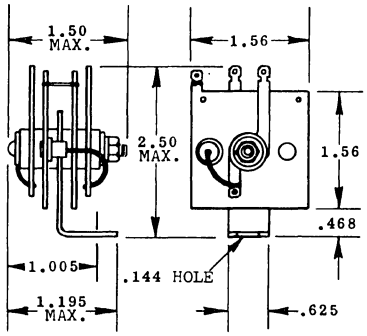

M126

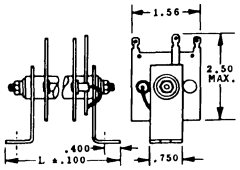

M126	L
A	3.50
B	4.00
C	4.50
D	5.00
E	5.50
F	6.00
G	6.50
H	7.00
J	7.50
K	1.26

M139

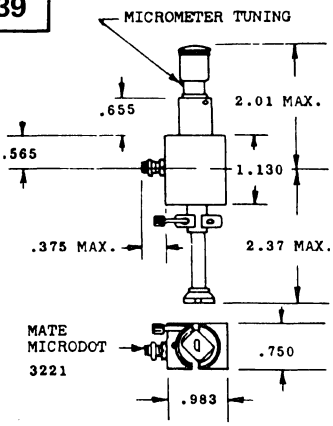

M163

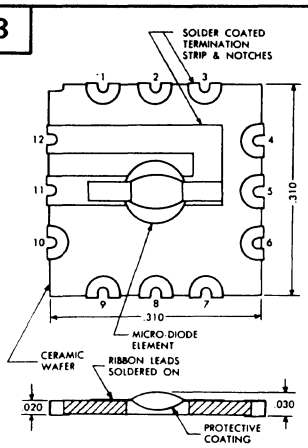

M168

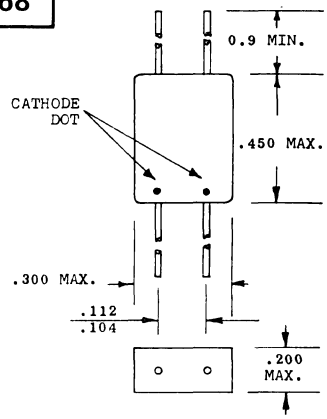

M169

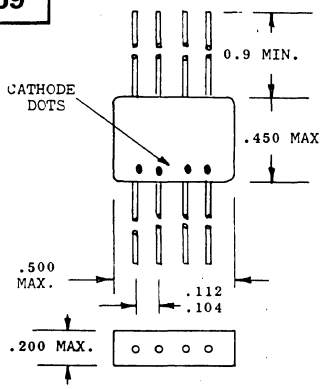

M174

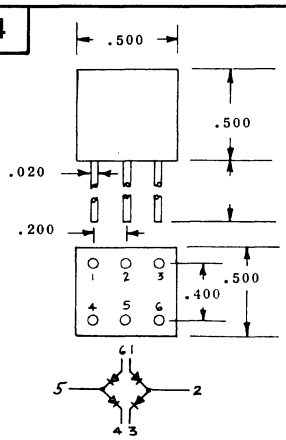

M175

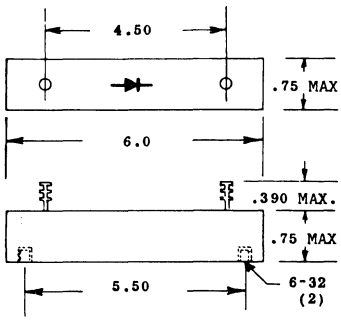

15. OUTLINE DRAWINGS

M176

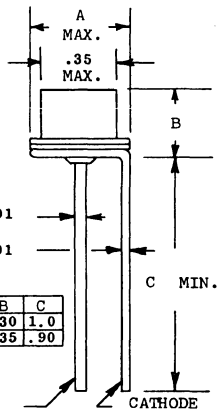

	A	B	C
M176	.42	.30	1.0
M176a	.50	.35	.90

M189

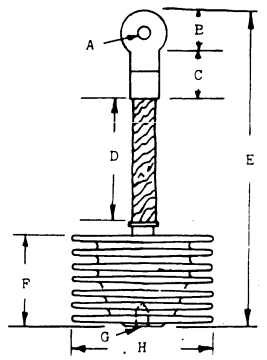

	A	B	C	D	E	F	G	H
M189	.244	.354	1.06	1.97	5.20	1.58	.315	2.56
M189a	.405				12.8	5.31		5.11

M204

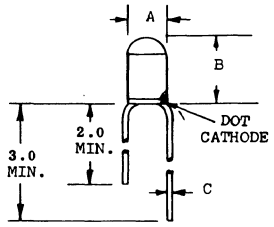

	A	B	C
M204a	.165	.225	.025
M204b	.190	.265	.025
M204c	.265	.265	.025
M204d	.285	.265	.025
M204e	.345	.265	.025
M204f	.320	.395	.032
M204g	.360	.425	.032
M204h	.395	.425	.032
M204j	.465	.525	.032
M204k	.350	.470	
M204m	.400	.470	
M204n	.470	.550	
M204p	.380	.620	
M204q	.380	.990	
M204r	.500	.620	
M204s	.500	.990	
M204t	.640	.754	
M204u	.640	.990	
M204v	1.060	.620	
M204w	1.060	.990	
M204x	1.380	.620	
M204y	1.380	.990	
M204z	.465 MAX	.475 MAX	

M212

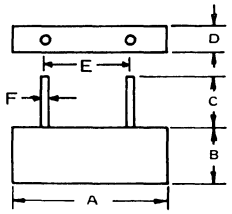

	A	B	C	D	E	F
M212	.650	.500 MIN	.500 MIN	.250 MAX		
M212a	1.000	.500 MIN	.500 MIN	.250 MAX		
M212b	1.250	.500 MIN	.500 MIN	.250 MAX		
M212c	1.750	.500 MIN	.500 MIN	.250 MAX		
M212d	.370	.500 MIN	.500 MIN	.250 MAX		
M212e	.925	.500 MIN	.500 MIN	.250 MAX		
M212f	1.200	.500 MIN	.500 MIN	.250 MAX		
M212g	.700	.500	.196	.236		
M212h	.525	.500	1.00 MIN	.215	.300	.031
M212j	.750	.500	1.00 MIN	.215	.600	.031
M212k	1.20	.500	1.00 MIN	.215	1.00	.031
M212l	1.50	.500	1.00 MIN	.215	1.30	.031
M212m	2.50	.500	1.00 MIN	.215	2.30	.031
M212n	.970 / 1.03	.620 / .680	.750 MIN	.380 / .420	.580 / .620	.047 / .053

M213

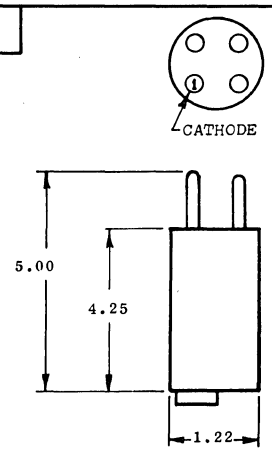

M214

	A	B	C	D	E	F
M214	.060	.100	.020	.500	.060	.003
M214a	.100	.100	.040	.500	.025	.004
M214b	.063 MAX	.063 MAX	.025		.050 MAX	.003

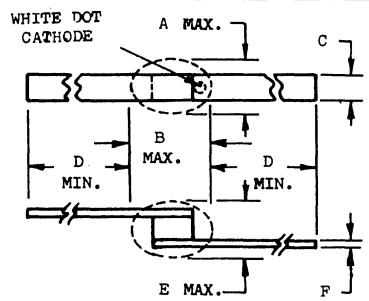

M226

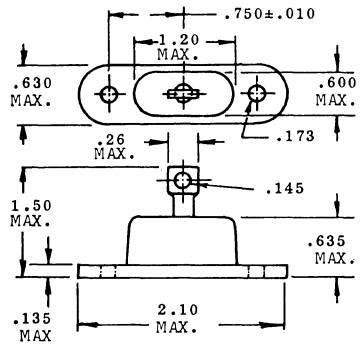

M228

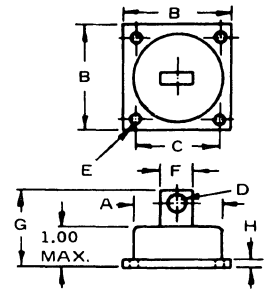

	A	B	C	D	E	F	G	H
M228	1.72	2.25	1.75	.375	.203	.760	1.9	.250
M228a	2.20	3.00	2.50	.562	.281	1.10	2.7	.250
M228b	2.10	3.00	2.50	.562	.281	1.10	2.0	.250
M228c	2.89	3.25	2.75	.562	.281	1.25	2.50	.250
M228d	1.77	2.44	1.77	.255	.330	.511	1.77	.250
M228e	1.77	2.44	1.77	.256	.335	.512	1.65	.157

15. OUTLINE DRAWINGS

M239

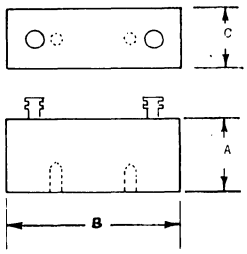

	A	B	C
M239a	.75	1.0	.75
M239b	.75	1.5	.75
M239c	.75	2.0	.75
M239d	.75	2.5	.75
M239e	.75	3.0	.75
M239f	.75	3.5	.75
M239g	.75	5.0	.75
M239h	.75	5.5	.75
M239j	.75	6.0	.75
M239k	.75	6.5	.75
M2391	.75	7.0	.75
M239m	1.25	8.0	2.0
M239n	1.25	10	2.0
M239p	1.25	12	2.0
M239q	1.5	8.0	4.0
M239r	1.5	12	4.0
M239s	1.5	14	4.0

	A	B	C
M239t	1.0	2.0	1.0
M239u	1.0	3.0	1.0
M239v	1.0	3.5	1.0
M239w	1.0	4.0	1.0
M239x	1.0	4.8	1.0
M239y	1.0	5.5	1.0
M239z	1.0	6.0	1.0
M239aa	1.0	6.5	1.0
M239ab	1.0	7.0	1.0
M239ac	1.0	4.0	2.0
M239ad	1.0	6.0	2.0
M239ae	1.0	8.0	2.0
M239af	1.0	4.0	3.0
M239ag	1.0	6.0	3.0
M239ah	1.0	8.0	3.0
M239aj	1.0	4.0	4.0
M239ak	1.0	6.0	4.0

M240

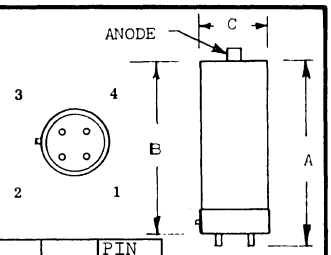

	A	B	C	PIN CONN-
M240a	7.75	7.38	2.31	4
M240b	9.75	9.38	3.88	4
M240c	8.25	7.50	2.31	3
M240d	9.13	8.38	2.63	2
M240e	7.75	7.38	1.70	2
M240f	9.50	9.12	1.70	2
M240g	11.0	10.4	2.00	2
M240h	8.25	7.50	2.00	2
M2401	10.6	10.0	2.48	4

M248

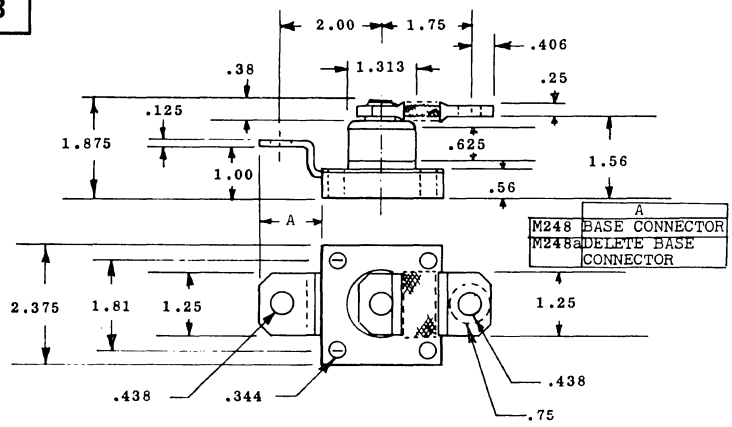

	A
M248	BASE CONNECTOR
M248a	DELETE BASE CONNECTOR

M267

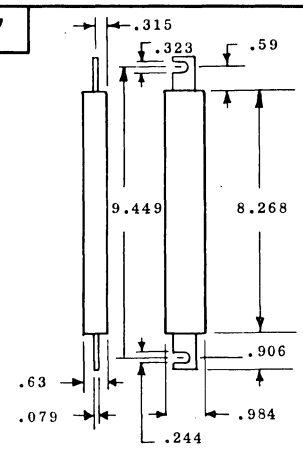

M280

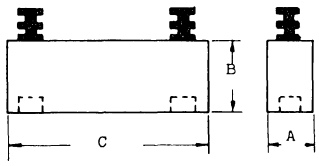

	A	B	C
M280	1.5	1.0	4.0
M280a	1.5	1.0	6.5
M280b	2.0	1.0	6.5

M291

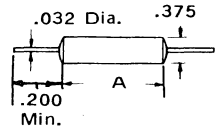

	A		A
M291	.563		
M291a	.688	M291j	1.500
M291b	.750	M291k	1.750
M291c	.875	M291m	1.938
M291d	1.000	M291n	2.313
M291e	1.063	M291p	2.675
M291f	1.188	M291q	3.000
M291g	1.313	M291r	3.500
M291h	1.375	M291s	4.063

M294

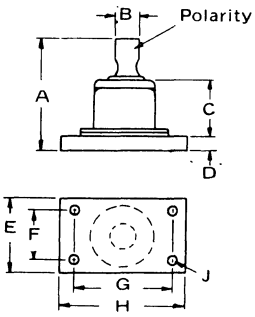

	A	B	C	D	E	F	G	H	J	POLARITY
M294	2.70	.600 .630	1.38	.200	1.59	.980	1.97	2.57	.260	ANODE
M294a	2.70	.600 .630	1.38	.200	1.59	.980	1.97	2.57	.260	CATHODE
M294b	3.07	.629	1.77 MAX	.177 .216	1.57 MAX	.984	1.96	2.55	.251 .259	ANODE

M307

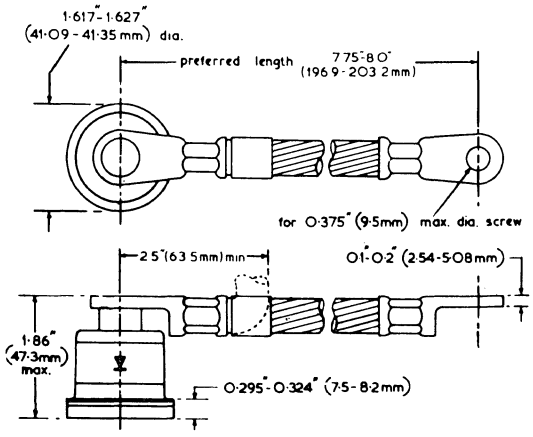

15. OUTLINE DRAWINGS

M324

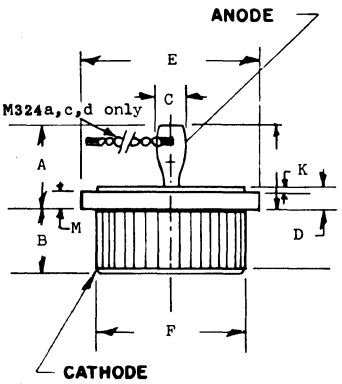

	A	B	C	D	E	F	G	H	J	K	M
M324a	.354	.244	.130	.114	.625	.500					
M324b	.472	.264		.094	.625	.500				.024	.094
M324c	.472	.264		.094	.625	.500				.024	.094
M324d	.472	.264		.094	.625	.500				.024	.094
M324e	.378 .409	.217 .236	.157 .165	.115 .130	.622 .626	.500 .504	.063 .079	.067 .091	.028 .035	.024 .032	.091 .098
M324f	.378 .409	.217 .236	.157 .165	.115 .130	.622 .626	.500 .504	.063 .079	.067 .091	.028 .035	.024 .032	.091 .098
M324g	.370 .374	.129 .248	.129		.625	.500					
M324h	.354	.244	.129	.114	.622 .629	.499					

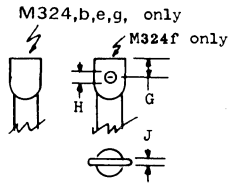

NOTES: A&C - LEAD HORIZONTAL
D - LEAD VERTICAL

M326

	L
M326	1.62
M326a	2.62
M326b	2.37
M326c	3.25
M326d	4.50
M326e	5.50
M326f	7.00
M326g	8.25
M326h	10.3
M326j	13.3
M326k	16.3
M326l	25.0

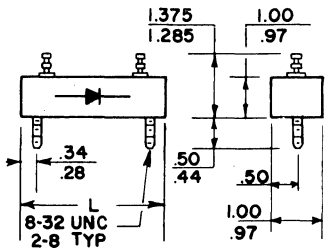

M338

Suffix	A	B	C	D
M338	.505	.425	.50	.051
M338a	.400	.341		.049

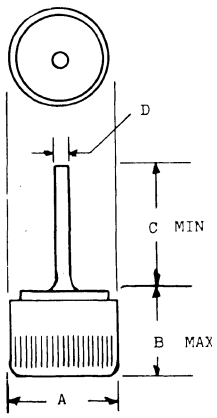

M343

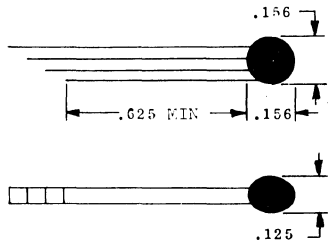

M346

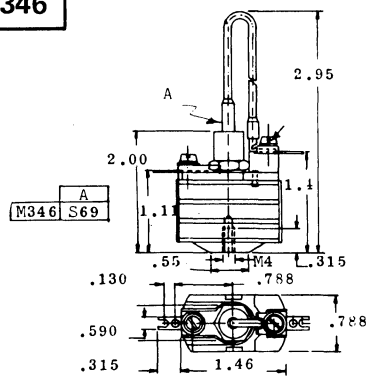

	A
M346	S69

M357

	A	B	C	D	E	BASE CONNECTION
M357	2.375	2.47	.515	.343	.390	OMITTED
M357a	2.400	2.07	.570	.312	.375	OMITTED
M357b	2.375	2.47	.515	.343	.390	INCLUDED
M357c	2.400	2.07	.510	.312	.375	INCLUDED

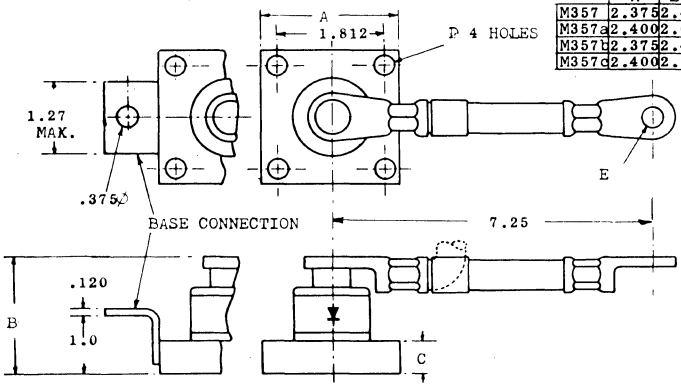

M366

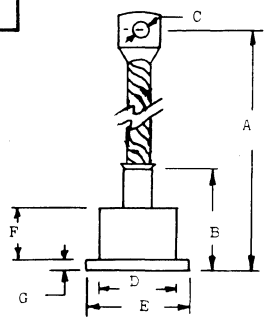

	A	B	C	D	E	F	G
M366	12.0	2.50	.492	1.652	1.960	.10	.314
M366a	8.87		.375		1.622		.310

M370

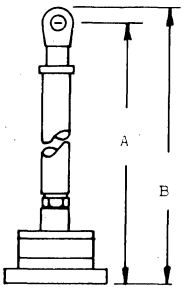

	A	B
M370	9.00	
M370a		10.0

M378

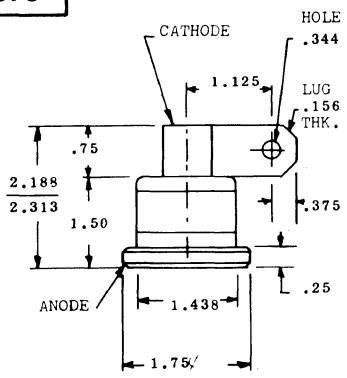

M383

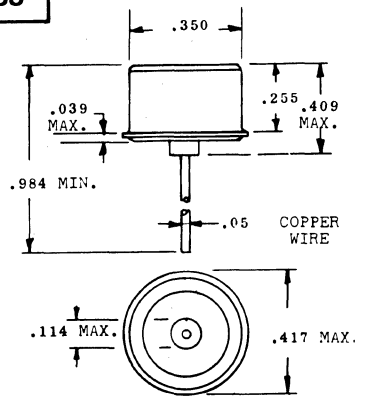

15. OUTLINE DRAWINGS

M396

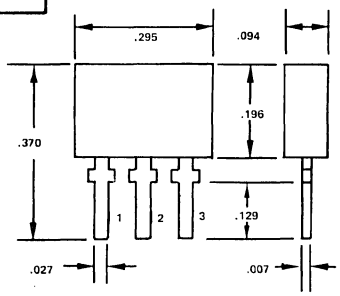

1	2	3
A1	C	A2

M401

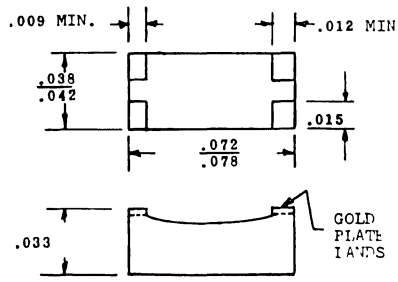

M412

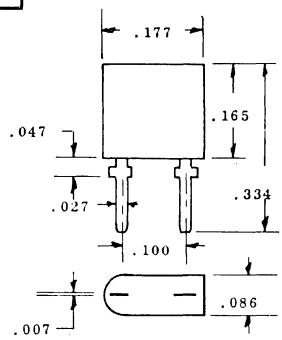

M423

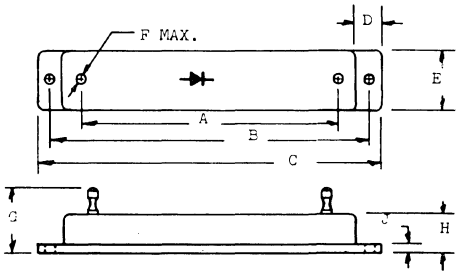

	A	B	C	D	E	F	G	H	J
M423	5.11	6.29	6.69	.393	.629	.165	.984	.590	.157
M423a	3.34	4.52	4.92	.393	.905	.165	1.18	.708	.157
M423b	5.70	6.88	7.28		.905	.165	1.18	.708	.157

M426

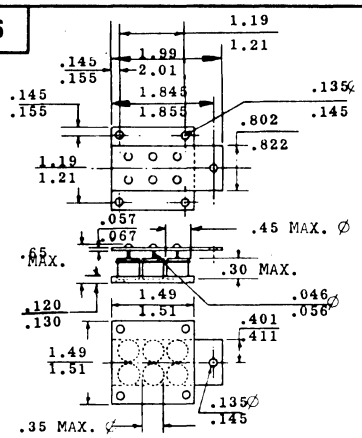

M430

LTR	INCHES	MILLIMETERS
A	.24R	6.10
B	.30	7.62
C	.13	3.30
D	1.67 NOM	42.42
E	.54	13.72
F	.75	19.05
G	3.00	76.20
H	.25	6.35
I	.156	3.96
J	.110 Dia.	2.79

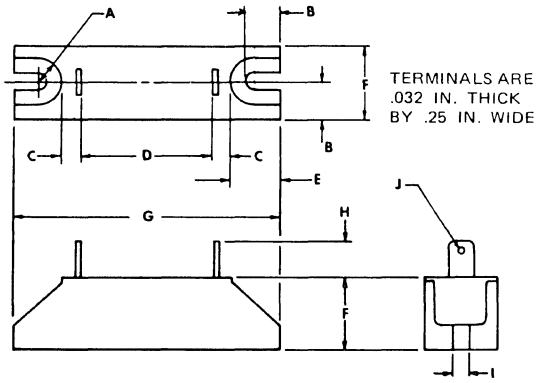

TERMINALS ARE .032 IN. THICK BY .25 IN. WIDE

M441

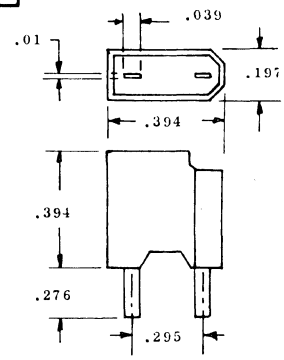

M445

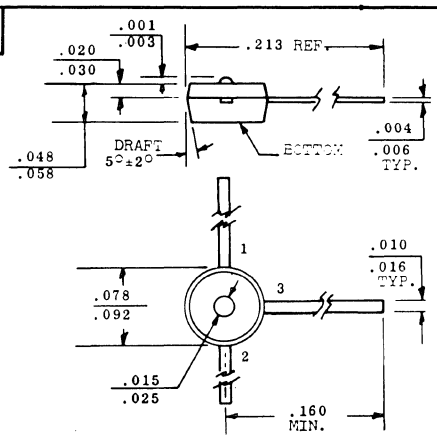

	1	2	3
M445	A	C	OMITTED
M445a	A2	C	A1
M445b	C2	A	C1
M445c	C	A/C	A
M445d	C	A	G

M447

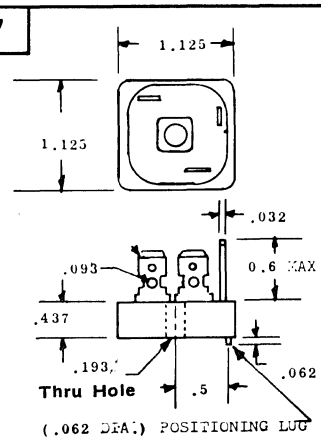

15. OUTLINE DRAWINGS

M458

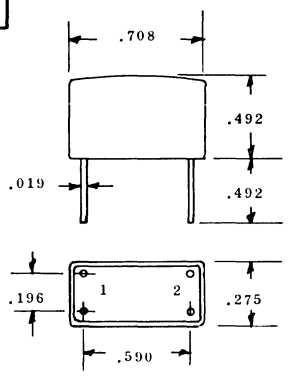

M460

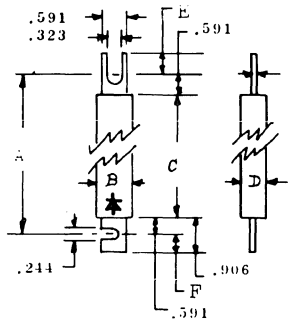

	A	B	C	D	E	F
M460	12.6	.984	11.4	.984	.215	.215
M460a		2.17	11.8	1.26	.215	.215
M460b		2.17	19.7	1.26	.215	.215
M460c	6.26		5.07	.984	.315	.315

M462

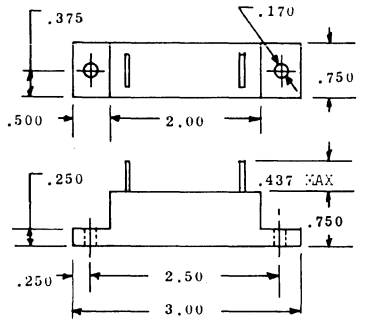

M463

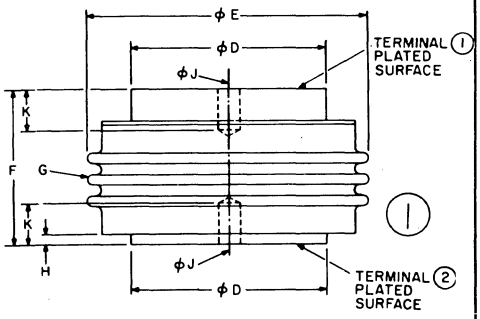

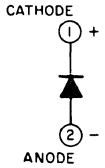

SYMBOL	INCHES MIN	INCHES MAX
ϕD	1.240	1.260
ϕE		1.875
F	1.000	1.040
G		
H	0.052	
ϕJ	0.136	0.146
K	0.220	0.280

M471

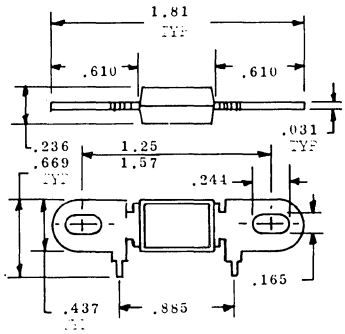

M486

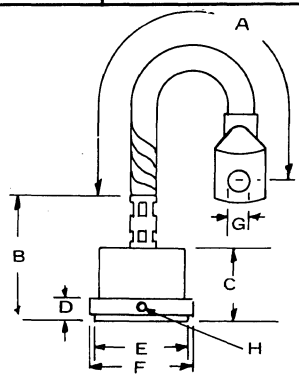

	A	B	C	D	E	F	G	H
M486	5.31	2.36	1.14	.393	1.57	1.73	.413	.125
M486a	7.40	2.59	1.22	.393	1.96	2.12	5.11	.125
M486b	7.28	2.91	1.79	.393	1.96	2.12	5.11	1.25

M491

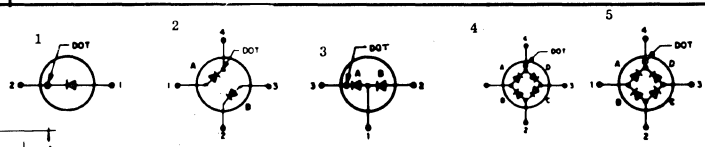

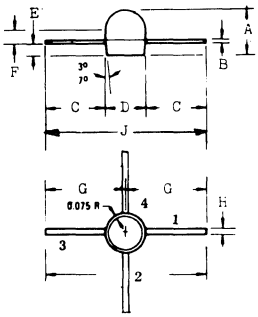

	A	B	C	D	E	F	G	H	J	REMARKS	TERMINAL CONNECTION
M491	.180 .210	.009 .011	.250 MIN	.250 MIN	.040 .050	.070 .080	.320 MIN	.013 .019	.640 MIN	OMIT LEAD 2,4	
M491a	.083 .100	.004 .006		.078 .092		.030 .040	.160	.010 .016	.320	OMIT LEAD 2,4	
M491b	.030 MAX	.003	.250	.100	.019 .021	.009 MAX	.300	.019 .021	.600	OMIT LEAD 2,4	1
M491c	.030 MAX	.003	.250	.100	.019 .021	.009 MAX	.300	.019 .021	.600	OMIT LEAD 4	2
M491d	.030 MAX	.003	.250	.100	.019 .021	.009 MAX	.300	.019 .021	.600		3
M491e	.030 MAX	.003	.250	.100	.019 .021	.009	.300	.019 .021	.600		4
M491f	.030 MAX	.003	.250	.100	.019 .021	.009	.300	.019 .021	.600		5
M491g	.050 MAX	.003 .005	.090 .110	.090 .110				.018 .022	.270 .330		

15. OUTLINE DRAWINGS

M492

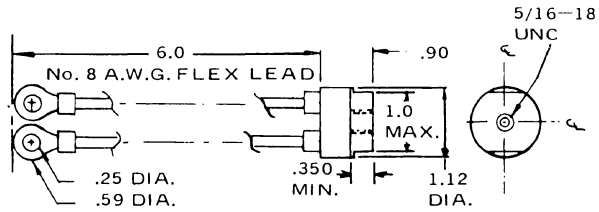

M493

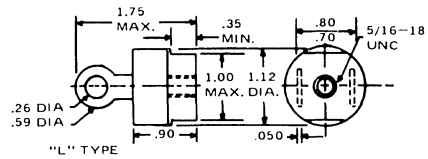

M495

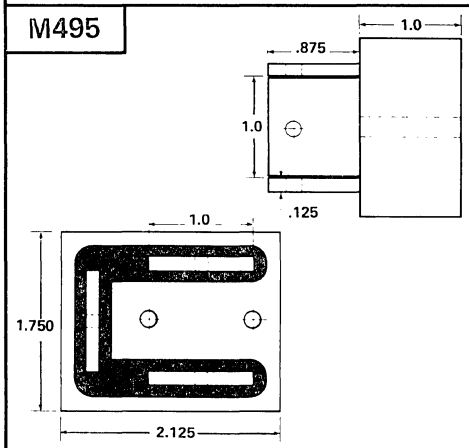

M496

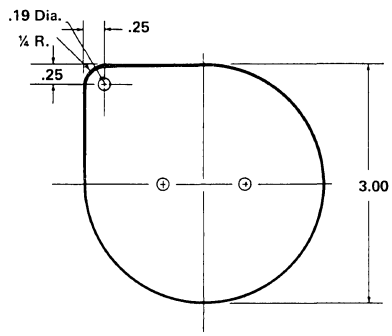

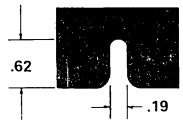

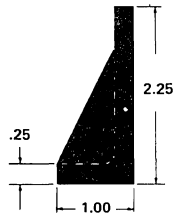

M500

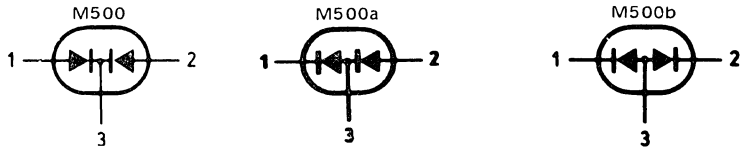

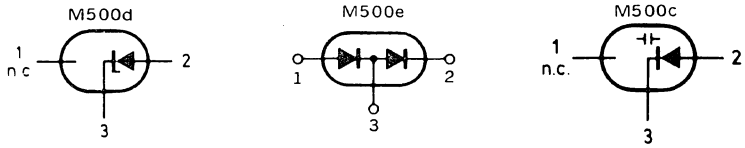

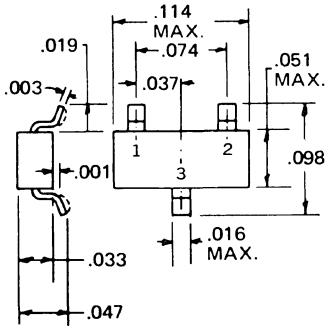

M501

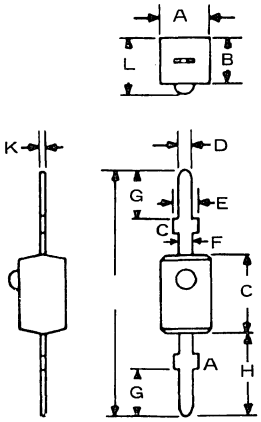

	A	B	C	D	E	F	G	H	J	K	L
M501	.098	.095	.157	.030 MAX	.043 MIN		.098		.492	.008	.114 MAX
M501a	.118 MAX	.106 MAX	.177 MAX	.026	.037	.030	.090	.157 MIN	.491	.010	
M501b	.094	.114	.161	.027	.043		.102	.177	.507	.008	.106

15. OUTLINE DRAWINGS

M519

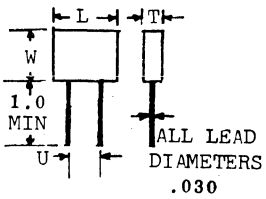

	W	L	T	U
M519	.500	.525	.215	.300
M519a	.500	.750	.215	.600
M519b	.500	1.20	.215	1.00
M519c	.500	1.50	.215	1.30
M519d	.500	2.50	.215	2.30
M519e	.209 MAX	.209 MAX	.055 MAX	.100

M523

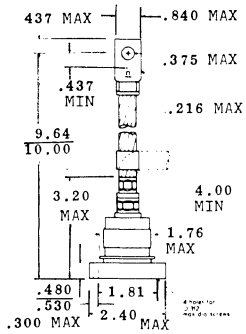

M533

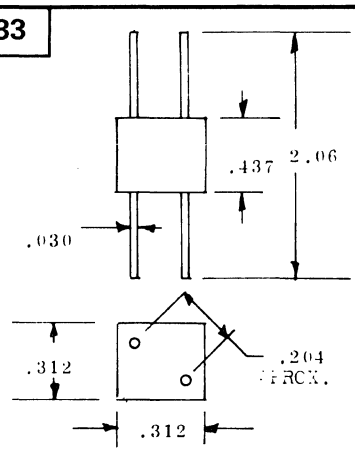

M535

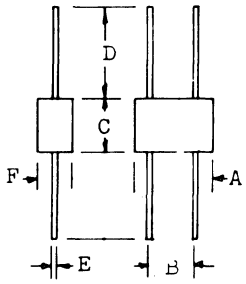

	A	B	C	D	E	F
M535	.529	.300	.463	.750	.030	.215
M535a	.265 MAX	.112	.265	.260 .280	.030 MAX	.185 MAX

M543

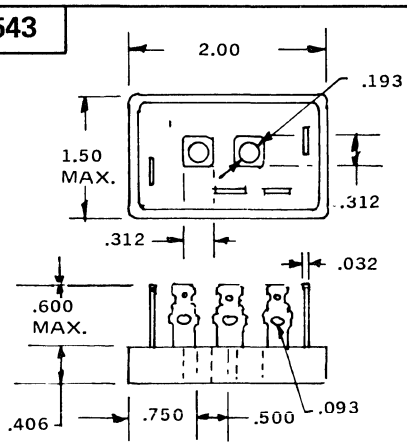

M560

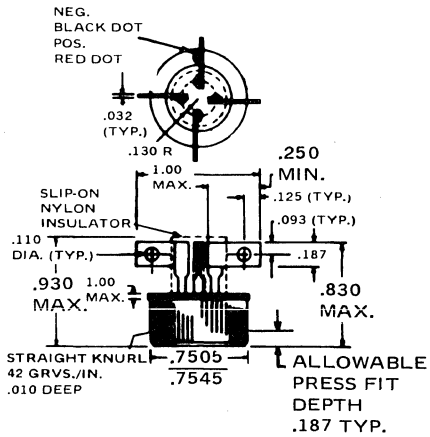

M560a	CENTER TAP COMMON CATHODE
M560b	CENTER TAP COMMON ANODE
M560c	THREE PHASE COMMON CATHODE
M560d	THREE PHASE COMMON ANODE
M560e	DOUBLER
M560f	TRIPLER
M560g	Quadrupler

M565

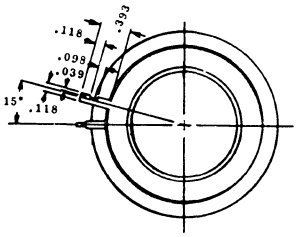

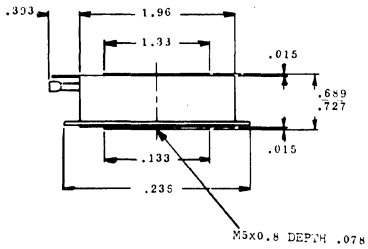

M566

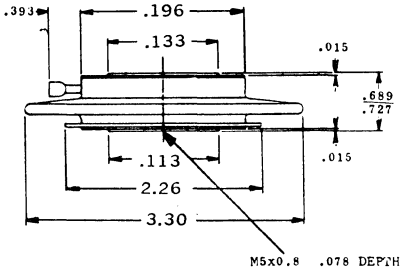

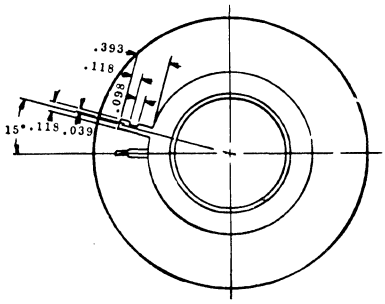

M568

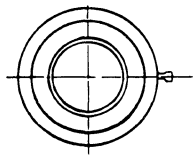

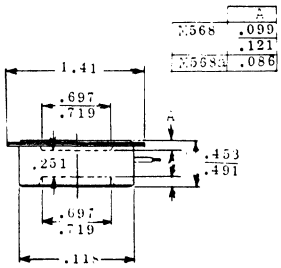

15. OUTLINE DRAWINGS

M571

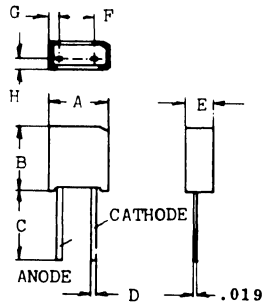

	A	B	C	D	E	F	G	H
M571	.511	.551	.590	.035	.236	.295	.086	.078
M571a	.389	.354	.452	.031	.196	.271	.059	.070
M571b	.523	.551	.590	.035	.248	.295	.086	.078
M571c	.689	.590	.236	.024	.268	.394		

M574

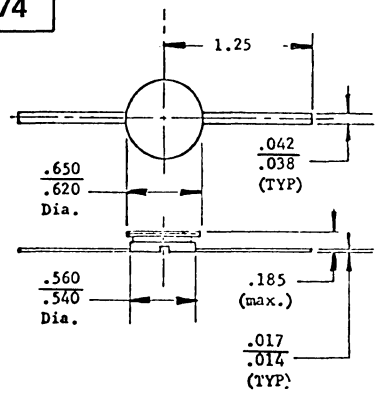

M584

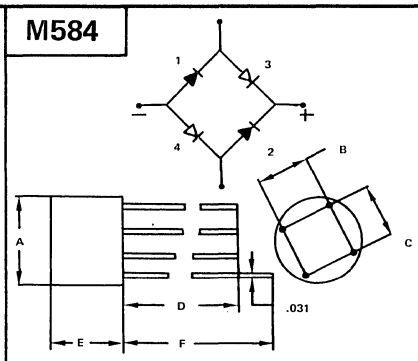

	A	B	C	D	E	F
M584	.374 .393	.200 .219	.200 .219	.118 1.21	.279 .282	1.29 1.32
M584a	.393 MAX	.200	.200	.492 MIN	.314 MAX	.590 MIN

M586

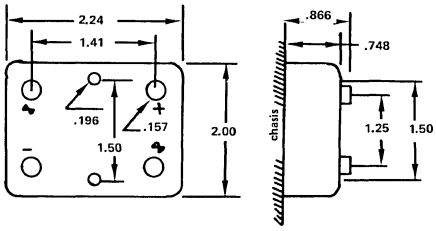

M594

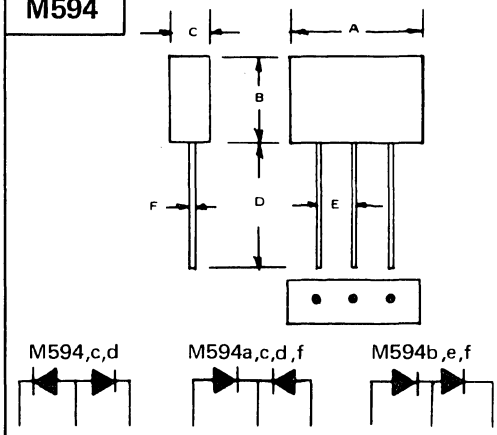

	A	B	C	D	E	F
M594a,b	.500	.500	.250	1.50	.150	.032
M594c	.492 .531	.413 .452	.196 .236	.787 MIN	.145 .169	.039
M594d	.590 MAX	.216 MAX	.275 MAX	.984 MIN	.157	.039
M594e	.500	.500	.250	1.50		.051
M594f	.580	.530 MAX	.310	1.60		
M594g	.600	.400			.15	
M594h	1.35	.500		.500 MIN	.55	.050 MAX

M622

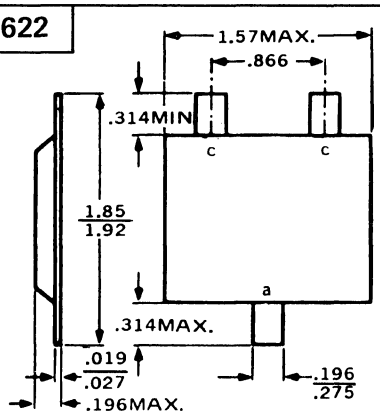

M630

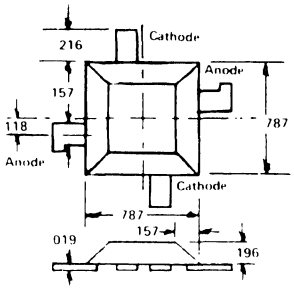

M637

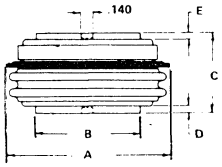

	A	B	C	D	E
M637	1.93	1.25	.972	.119	.079
M637a	1.73	1.00	.972	.109	.079
M637b	2.75	1.50	.972	.070	.070
M637c	2.75	1.75	.972	.070	.070

M643

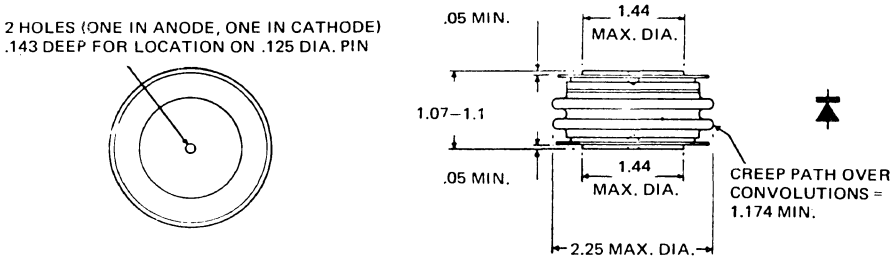

M647

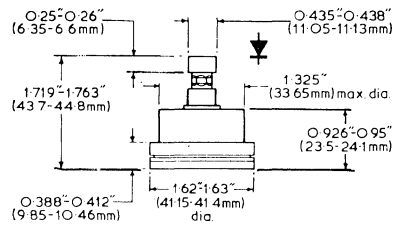

15. OUTLINE DRAWINGS

M650

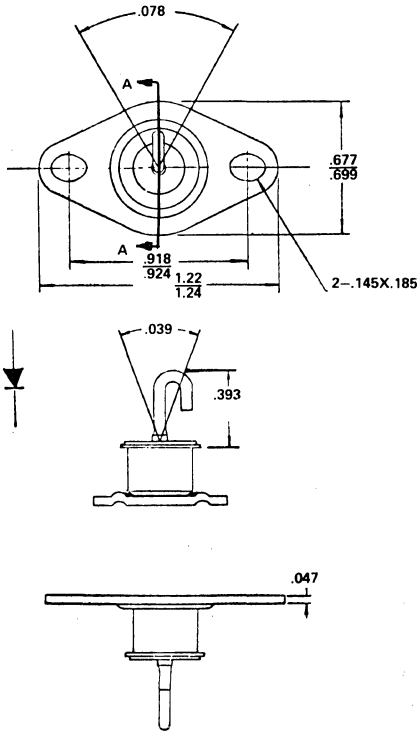

M666

	A	B	C
M666	3.500	2.030	.393
M666a	3.444	2.362	.551

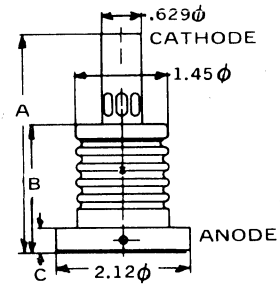

M681

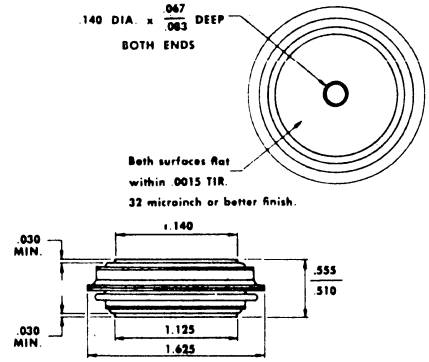

M697

	REMARKS
M697	COMMON NEG.OUTPUT
M697a	COMMON POS.OUTPUT

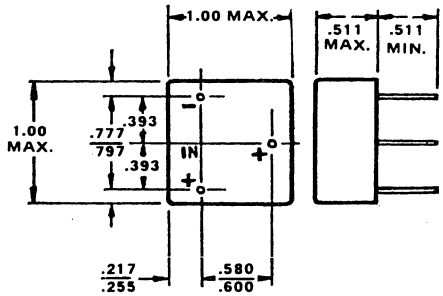

M698

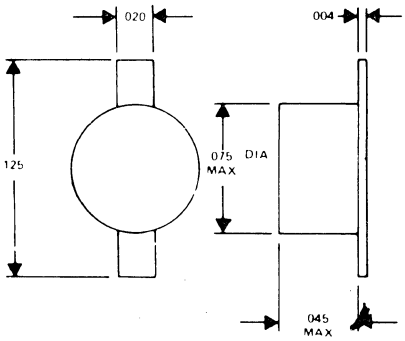

M713

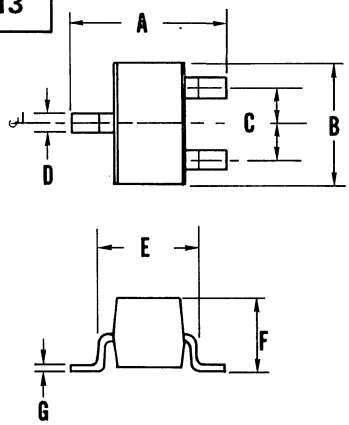

	A	B	C	D	E	F	G
M713	.106 .125	.084 .091	.048	.013 .015	.068 .070	.050 .064	.003
M713a	.091	.114	.079	.016		.039	.004
M713b	.098	.114	.075	.016		.043	.006

M722

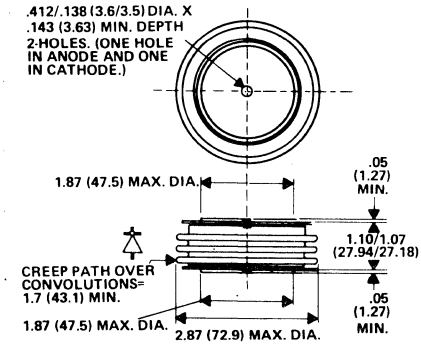

M737

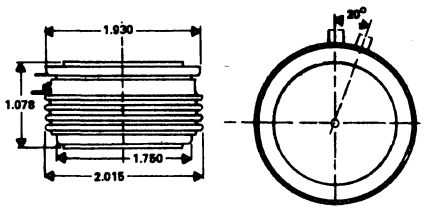

M746

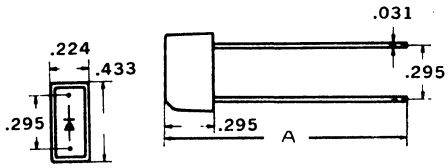

	A
M746	1.25
M746a	1.33

15. OUTLINE DRAWINGS

M747

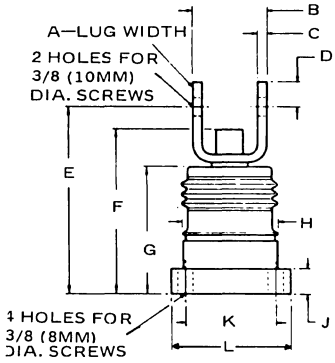

DIMENSIONS IN MM

	A	B	C	D	E	F	G	H	J	K	L
M747	26.7 MAX	38.1 MAX	4.7	12.7	94.9 / 98.6	84.8 MAX	66.0 MAX	49.3 MAX	13.5 MAX	46.0	60.9 MAX
M747a	26.7 MAX	38.0		13.0 MAX	81.8 / 85.3		52.8		13.5	46.0	61.0

M748

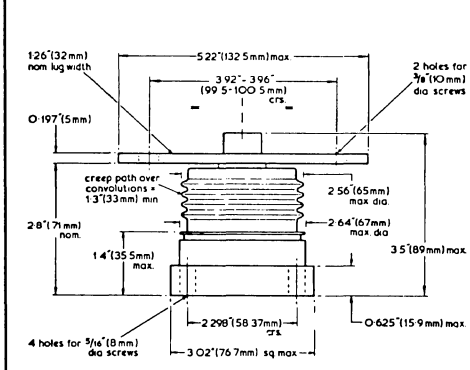

M750

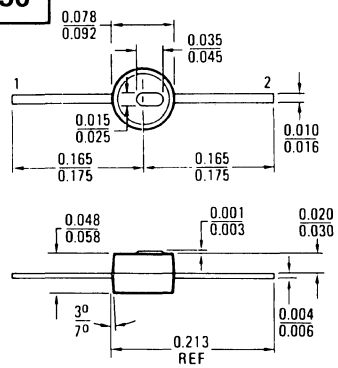

STYLE 1:
PIN 1. ANODE
2. CATHODE

M754

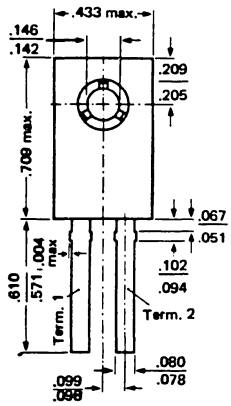

M757

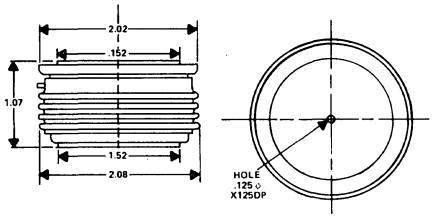

M759

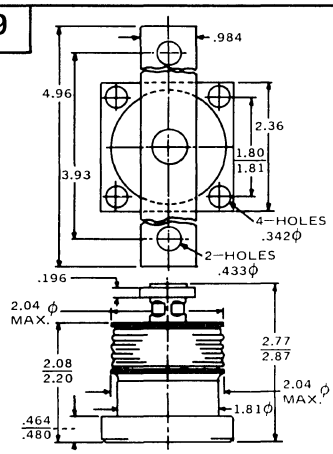

M764

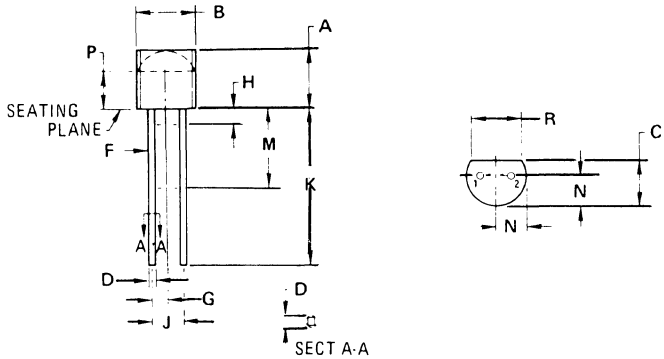

	A	B	C	D	F	G	H	J	K	M	N	P	R
M764	.170 / .210	.175 / .205	.125 / .165	.014 / .021	.016 / .019	.050 BSC	.050 MAX	.100 BSC	.500 MIN	.250 MIN	.080 / .105	.115	.135
M764a	.175 / .185			.016 / .019				.090 / .110	.500 MIN				

M765

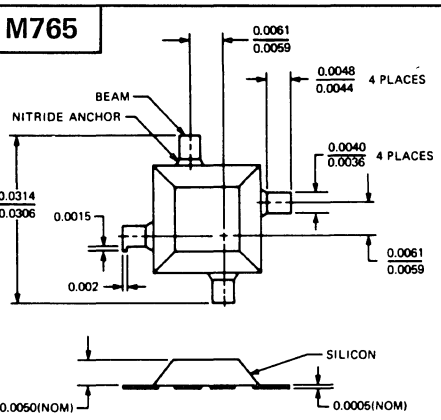

BEAM LEAD CHIP MECHANICAL OUTLINE TRANSISTORS

M766

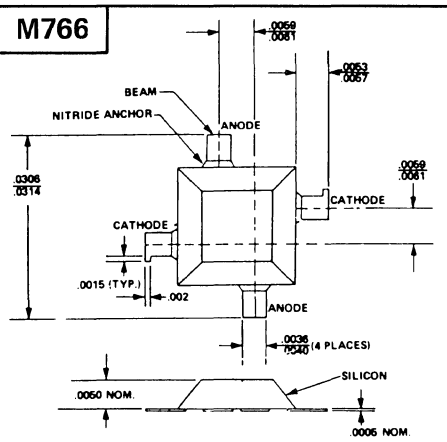

M769

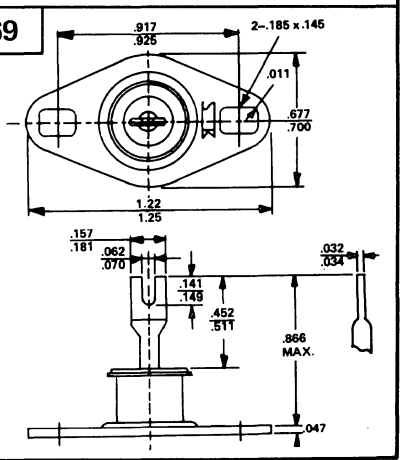

15. OUTLINE DRAWINGS

M771

	INCHES		METRIC MM	
	MIN.	MAX.	MIN.	MAX.
A	1.600	1.650	40.64	41.91
B	.744	.752	18.89	19.10
C	.030	.060	.76	1.52
D	.515	.565	13.08	14.35
E	.135	.150	3.42	3.68
*F	.067	.083	1.70	2.11

* = DEPTH OF 'E' DIA.

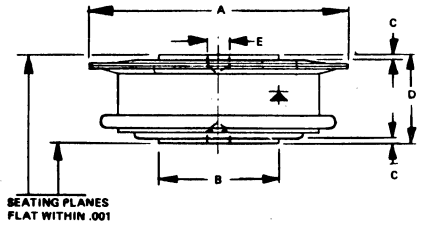

M774

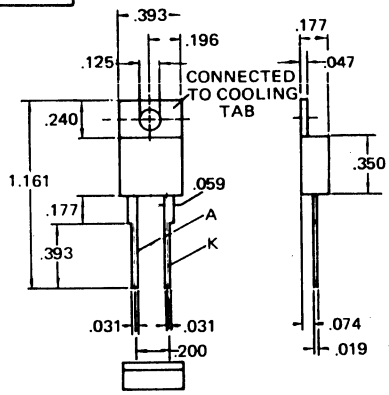

M775

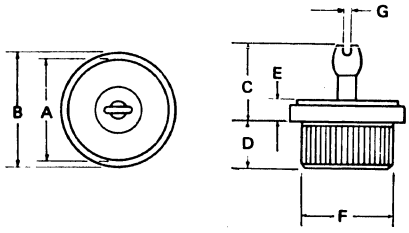

	A	B	C	D	E	F	G
M775	.488 / .492	.620 / .630	.406 / .424	.235 / .245	.106 / .114	.500 / .503	.050 / .055
M775a	.488 / .492	.620 / .630	.406 / .424	.227 / .253	.108 / .125	.501 / .504	.050 / .055

M776

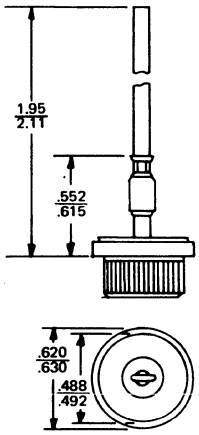

M777

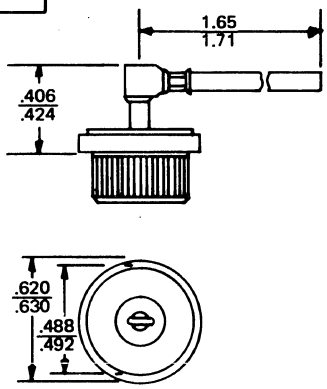

M778

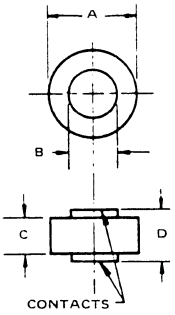

Suffix	A	B	C	D
M778	.395 / .410	.218 / .230	.155 / .170	.234 / .246
M778a	.380 / .410	.215 / .225	.165 / .185	.235 / .250
M778b	.327 / .347	.215 / .225	.165 / .185	.235 / .250

M784

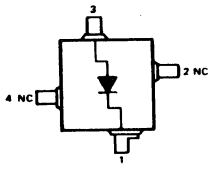

ELECTRICAL REPRESENTATION

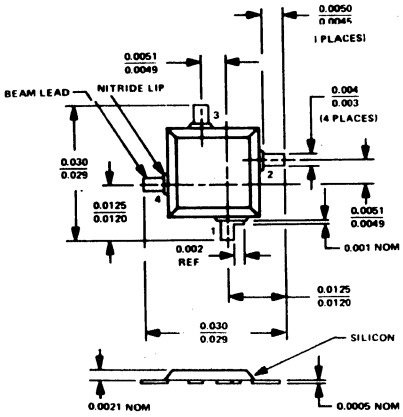

M785

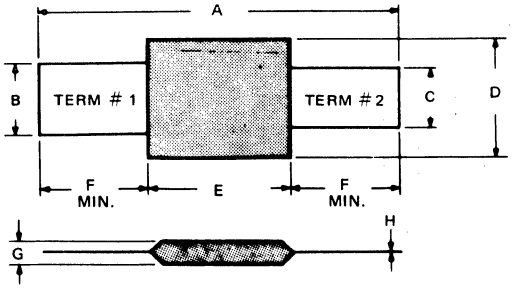

	A	B	C	D	E	F	G	H	TERM #1	TERM #2
M785	.030	.005 / .008	.003 / .006	.008 / .012	.010 / .014	.005 MIN	.001 / .003	.0001 / .0003	CATHODE	ANODE
M785a	.024 / .030	.003 / .005	.0045 / .0065	.009 / .013	.008 / .012	.005 MIN	.001 / .003	.0001 / .0003	ANODE	CATHODE
M785b	.028	.001 / .003	.006 / .008	.008 / .012	.013 / .017	.005 MIN	.001 / .003	.0001 / .0003	ANODE	CATHODE

M818

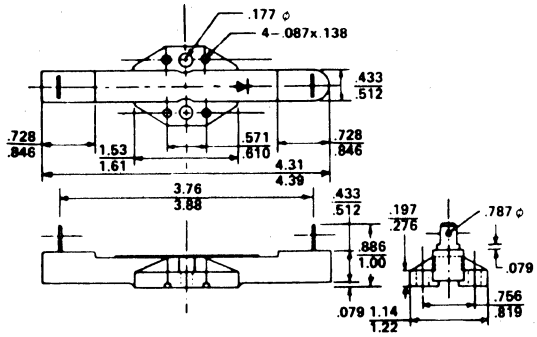

15. OUTLINE DRAWINGS

M823

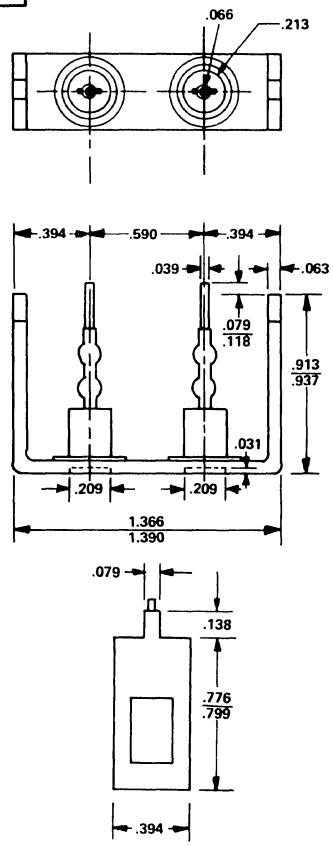

M824

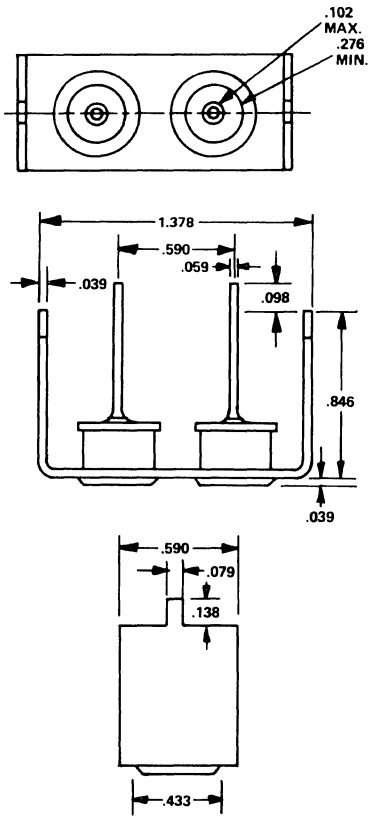

M831

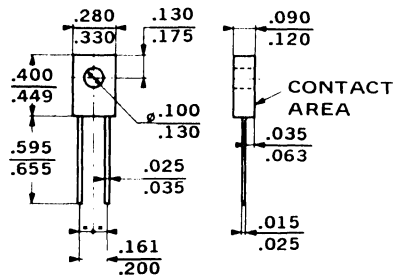

M832

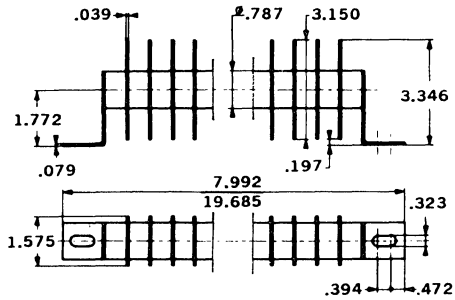

M839

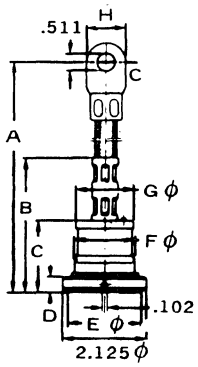

	A	B	C	D	E	F	G	H
M839	10.826	3.346	1.811	.393	1.960	1.476	1.456	.929
M839a	10.236	2.913	1.811	.393	1.960	1.476	1.456	.929
M839b	10.236	3.149	2.066	.472	1.771	1.456	1.456	.866

M840

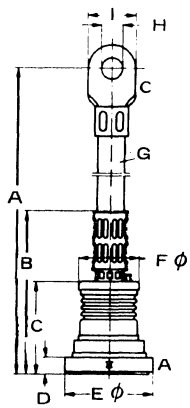

DIMENSIONS IN "MM"

	A	B	C	D	E	F	G	H	I
M840	10.8	4.13	2.36	.551	2.12Ø	1.45	95 sq mm	.515	1.16
M840a	10.8	3.30	2.24	.393	2.12Ø	1.45	50 sq mm	.515	1.14

M841

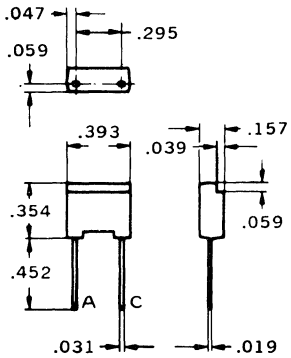

M845

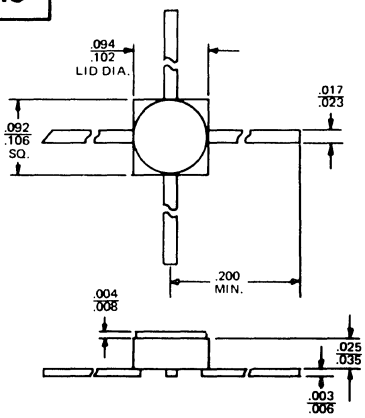

M846

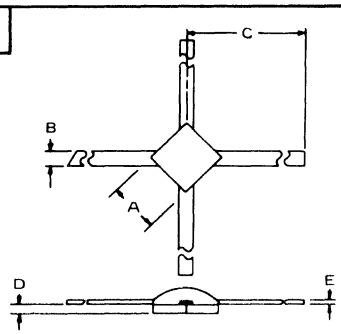

	A	B	C	D	E
M846	.045 .055	.012 .018	.150 MIN	.014 MAX	.004 TYP
M846a	.070 SQ	.012 .018	.150 MIN	.014 MAX	.004 TYP

15. OUTLINE DRAWINGS

M849

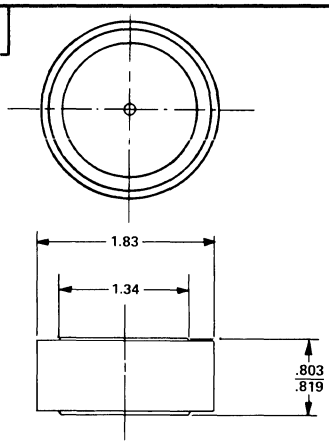

M850

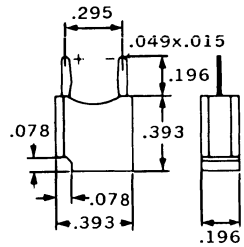

M851

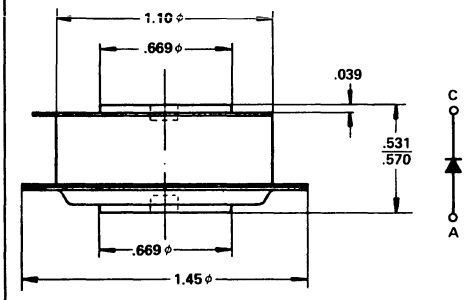

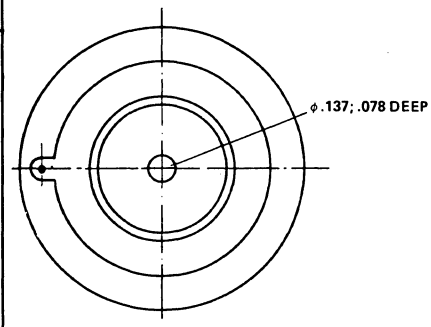

M852

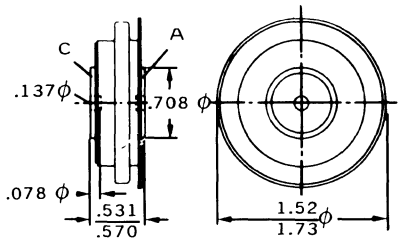

M853

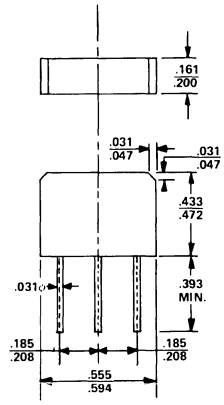

M854

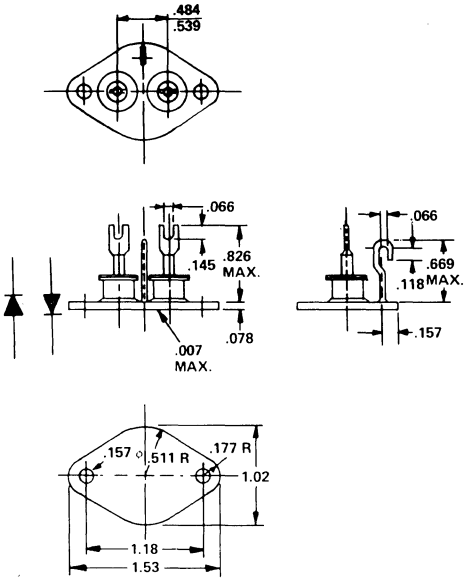

M856

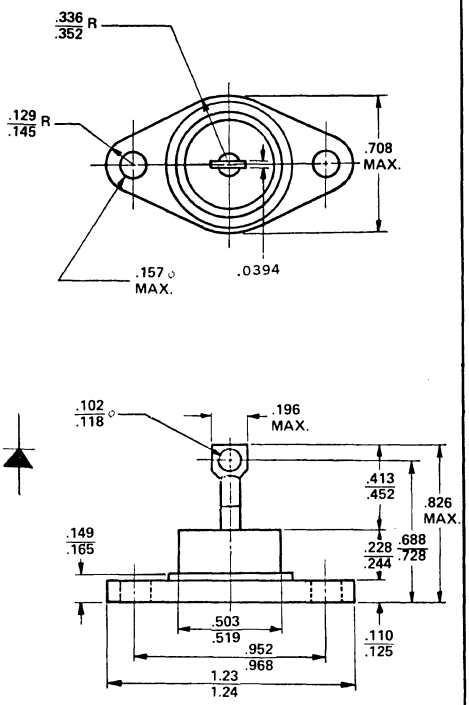

M858

SYMBOL	INCHES	
	MIN	MAX
A	3.600	3.800
B	2.485	2.515
C	25°	35°
D	1.500	1.740
E		2.000
F	1.380	1.500
G		2.500
H	2.760	3.000
J		.940
K	0.094	0.125
L	0.440	0.560
M	0.380	
ØN	0.391	0.421
P	7.300	7.800
Q	1.880	2.360
R	0.001	0.094
S	2.640	2.880
T	1.940	2.180
U	2.040	2.520

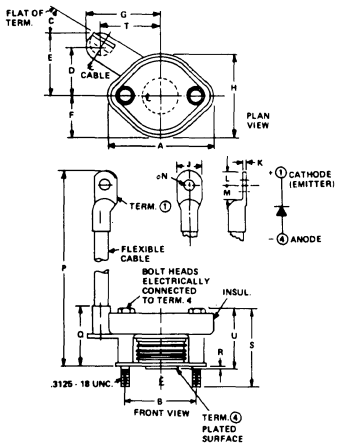

15. OUTLINE DRAWINGS

M859

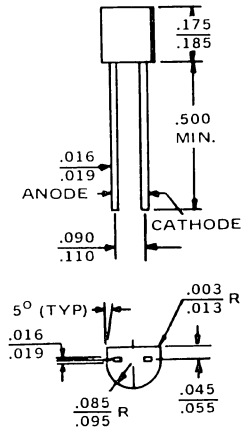

M863

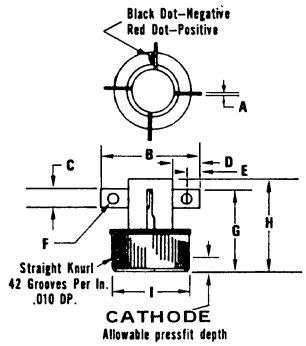

	POLARITY	A	B	C	D	E	F	G	H	J
M863	CENTER TAP COMMON CATHODE	.032	1.00 MAX	.187	.250	.125	.110	.830 MAX	.930 MAX	.750 .754
M863a	CENTER TAP COMMON CATHODE	.032	1.00 MAX	.250	.250	.125	.110	.830 MAX	.930 MAX	.750 .754
M863b	CENTER TAP COMMON ANODE	.032	1.00 MAX	.187	.250	.125	.110	.830 MAX	.930 MAX	.750 .754
M863c	CENTER TAP COMMON ANODE	.032	1.00 MAX	.250	.250	.125	.110	.830 MAX	.930 MAX	.750 .754
M863d	3 PHASE COMMON CATHODE	.032	1.00 MAX	.187	.250	.125	.110	.830 MAX	.930 MAX	.750 .754
M863e	3 PHASE COMMON CATHODE	.032	1.00 MAX	.250	.250	.125	.110	.830 MAX	.930 MAX	.750 .754
M863f	3 PHASE COMMON ANODE	.032	1.00 MAX	.187	.250	.125	.110	.830 MAX	.930 MAX	.750 .754
M863g	3 PHASE COMMON ANODE	.032	1.00 MAX	.250	.250	.125	.110	.830 MAX	.930 MAX	.750 .754
M863h		.032	1.00 MAX	.187	.250	.125	.110	.830 MAX	.930 MAX	.750 .754
M863J		.032	1.00 MAX	.250	.250	.125	.110	.830 MAX	.930 MAX	.750 .754

M864

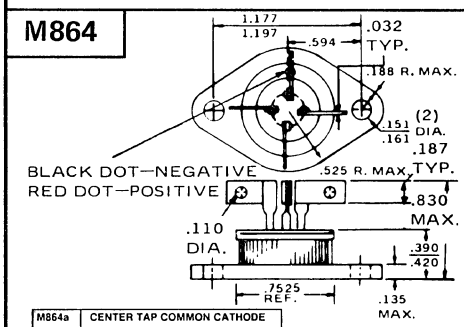

M864a	CENTER TAP COMMON CATHODE
M864b	CENTER TAP COMMON ANODE
M864c	THREE PHASE COMMON CATHODE
M864d	THREE PHASE COMMON ANODE
M864e	DOUBLER
M864f	TRIPLER
M864g	QUADRUPLER

M879

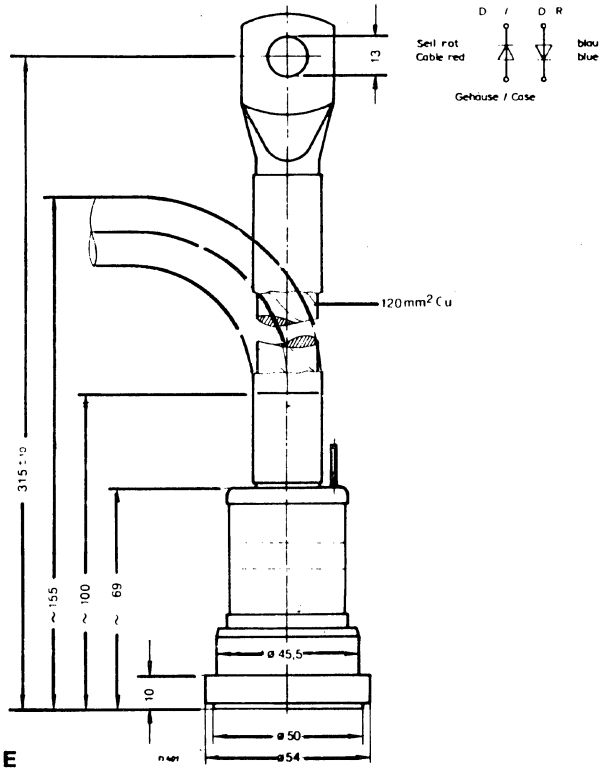

Gehäuse/Case E
DIN 41890 – 117 A 2
Kontaktflächen vernickelt
Contact surfaces nickel-plated
G = 910 g K = 33 mm

M867

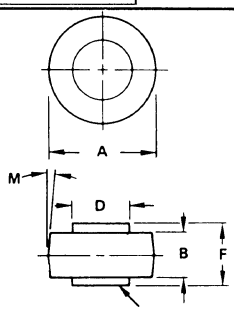

Suffix	MILLIMETERS A	B	D	F	M	INCHES A	B	D	F	M
M867	10.03 10.29	4.19 4.45	5.54 5.64	5.94 6.25	5° NOM	0.395 0.405	0.165 0.175	0.218 0.222	0.234 0.246	5°NOM
M867a	8.43 8.69	4.19 4.45	5.54 5.64	5.94 6.25	5° NOM	0.332 0.342	0.165 0.175	0.218 0.222	0.234 0.246	5°NOM

M879

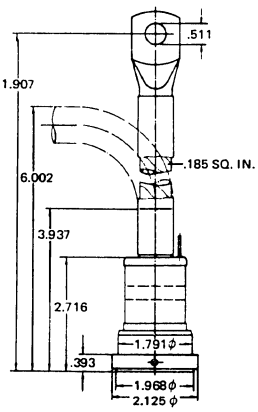

M880

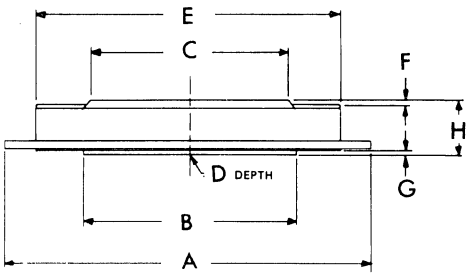

	A	B	C	D	E	F	G	H
M880	2.44 MAX	1.377	1.259	1.67 MAX	2.047 MAX	.157 MIN	.157 MIN	.295 .334
M880a	3.38 MAX	2.36	2.36	.550	2.99	.015 MIN	.015 MIN	.520

M865

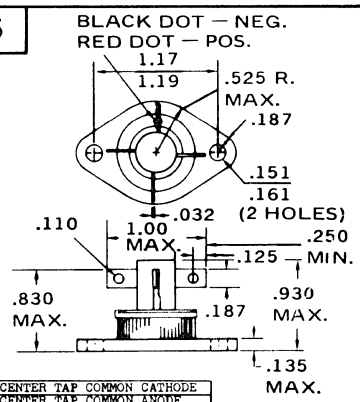

M865a	CENTER TAP COMMON CATHODE
M865b	CENTER TAP COMMON ANODE
M865c	THREE PHASE COMMON CATHODE
M865d	THREE PHASE COMMON ANODE

15. OUTLINE DRAWINGS

M882

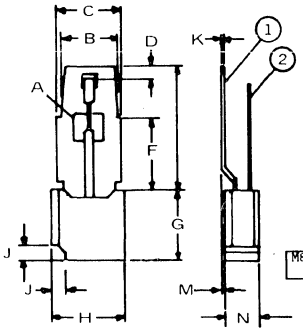

	A	B	C	D	E	F	G	H	J	K	M	N	1	2
M882	.153	.306 .307	.354	.047 .070	.669 .708	.374 .413	.381 .405	.385 .401	.078	.019	.027	.188 .204	ANODE	CATHODE

M885

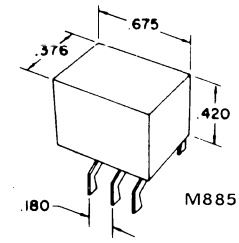

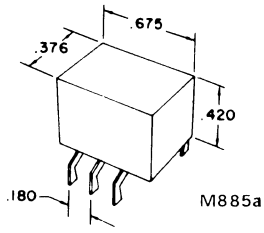

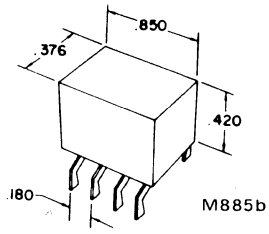

M887

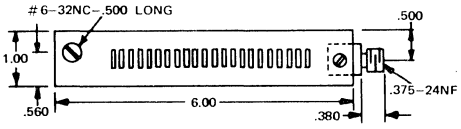

M873

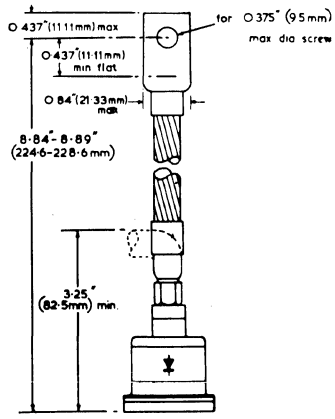

M890

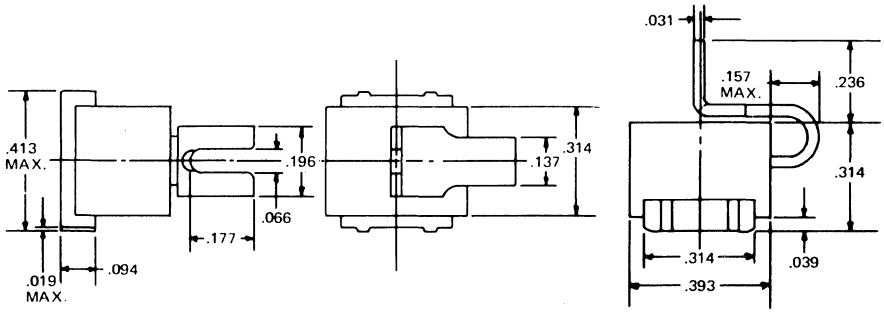

M894

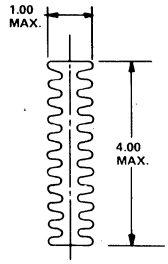

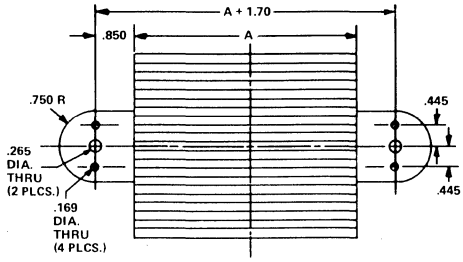

	A
M894	4,78
M894a	7,98
M894b	11,18
M894c	14,38
M894d	17,58
M894e	20,78

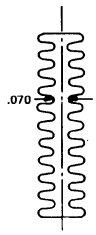

M896

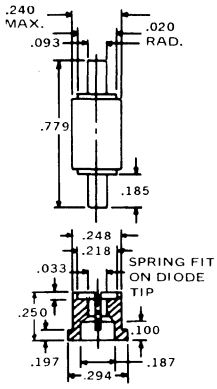

15. OUTLINE DRAWINGS

M901

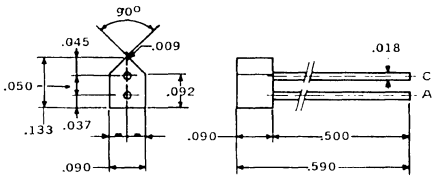

M903

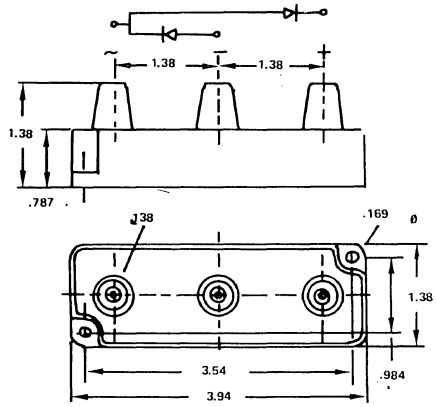

M904

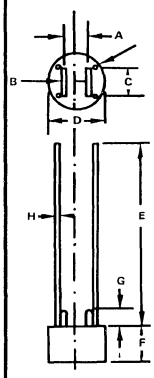

LTR	INCHES
A	.11
B	.03
C	.185-.215
D	.333 DIA
E	1.0 MIN.
F	.20
G	.05
H	.022-.028 DIA.

M915

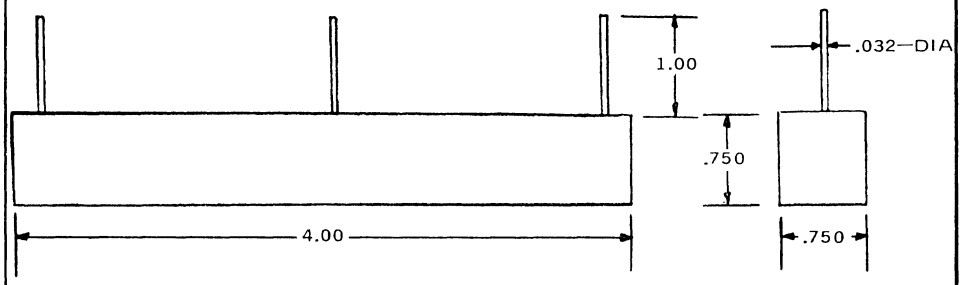

M916

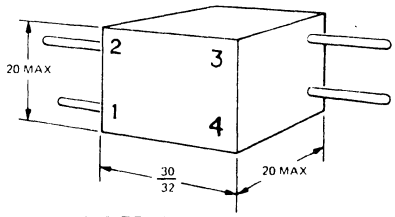

Lead Length 0.75 Min.

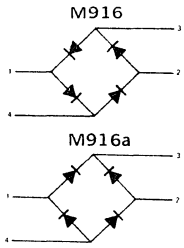

M919

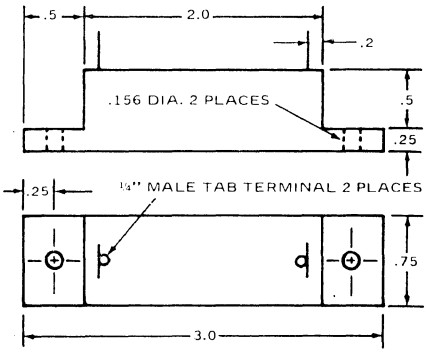

M926

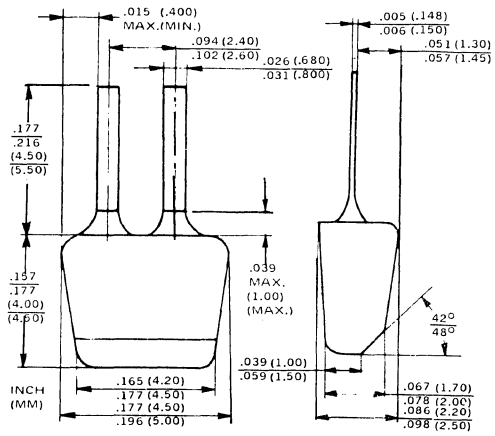

M945

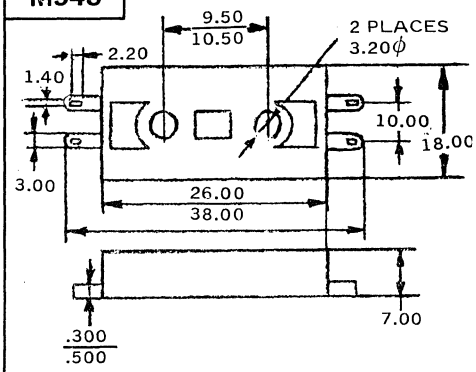

DIMENSIONS IN MM

15. OUTLINE DRAWINGS

M936

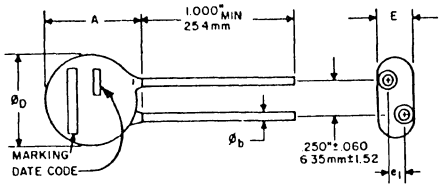

DIMENSIONS IN MM

	A	ØD	E	e1	Øb
M936	11.7	8.51	4.0	.098 2.00	.590 .680
M936a	18.9	16.15	4.4	1.09 2.00	.770 .860
M936b	11.7	8.51	4.5	1.24 2.50	.590 .680
M936c	11.7	8.51	5.0	1.50 3.00	.590 .680
M936d	11.7	8.51	5.5	1.75 3.50	.590 .680
M936e	11.7	8.51	6.0	2.01 4.00	.590 .680
M936f	11.7	8.51	6.5	2.27 4.50	.590 .680
M936g	18.9	16.15	5.0	1.36 2.50	.770 .860
M936h	18.9	16.15	5.4	1.63 3.00	.770 .860
M936j	18.9	16.15	6.0	1.90 3.50	.770 .860
M936k	18.9	16.15	6.4	2.17 4.00	.770 .860
M936m	18.9	16.15	7.0	2.44 4.50	.770 .860
M936n	18.9	16.15	7.4	2.71 5.00	.770 .860
M936o	21.0	16.5	4.4	2.0	.800
M936p	21.0	16.5	5.0	2.00	.800
M936q	21.0	16.5	5.4	3.00	.800
M936r	21.0	16.5	6.0	3.50	.800
M936s	21.0	16.5	6.4	4.00	.800
M936t	21.0	16.5	7.0	4.50	.800
M936u	21.0	16.5	7.4	5.0	.800
M936v	12.5	9.0	4.0	2.00	.600
M936w	12.5	9.0	4.5	.00	.600
M936x	12.5	9.0	5.0	3.00	.600
M936y	12.5	9.0	5.5	3.50	.600
M936z	12.5	9.0	6.0	4.00	.600
M936aa	12.5	9.9	6.5	4.50	.600
M936ab	27.	23	5.0	3.5	.800
M936ac	27.	23.0	7.0	5.0	.800
M936ad	27	23.0	8.0	6.0	.800
M936ae	28	24	10.0	8.0	.800
M936af	28	24.0	10.0	9.0	.800
M936ag	21	16.5	4.5	1.5	.800
M936ah	21	16.5	5.0	3.5	.800
M936ai	21	16.5	6.5	5.0	.800
M936aj	21	16.5	8.0	6.0	.800
M936ak	21	16.5	10.0	8.0	.800
M936al	21	16.5	11.0	9.0	.800
M936am	11.7 MAX	8.7 MAX	5.0 MAX	2.0	.635
M936an	16.0 MAX	12.5 MAX	5.0 MAX	2.0	.81
M936ao	18.9 MAX	16.4 MAX	5.0 MAX	2.0	.81
M936ap	11.7 MAX	8.7 MAX	5.6 MAX	2.5	.635
M936aq	16.0 MAX	12.5 MAX	5.6 MAX	2.5	.81
M936ar	18.9 MAX	16.4 MAX	7.3 MAX	4.0	.81
M936as	25.5 MAX	22.5 MAX	7.3 MAX	4.0	.81
M936at	25.5 MAX	22.5 MAX	10.8 MAX	7.3	.81
M936au	16.0 MAX	12.5 MAX	7.3 MAX	4.0	.81
M936av	18.9 MAX	16.4 MAX	10.8 MAX	7.3	.81
M936aw	10.0 MAX	7.0 MAX	5.0 MAX	2.0	.635
M936ax	18.9 MAX	16.4 MAX	5.6 MAX	2.5	.81
M936ay	25.5 MAX	22.5 MAX	5.0 MAX	2.0	.81
M936az	25.5 MAX	22.5 MAX	5.6 MAX	2.5	.81

M937

LTR.	INCHES			MILLIMETERS		
	M937	M937a	M937b	M937	M937a	M937b
A	0.75	1.00	1.00	19.05	25.40	25.40
B	0.375	0.200	0.200	9.52	5.08	5.08
C	0.375	0.500	0.500	9.52	12.70	12.70
L	6.00	6.00	8.900	152.4	152.4	226.1
T	0.040	0.040	0.040	1.02	1.02	1.02

Glass filled
epoxy PC Board

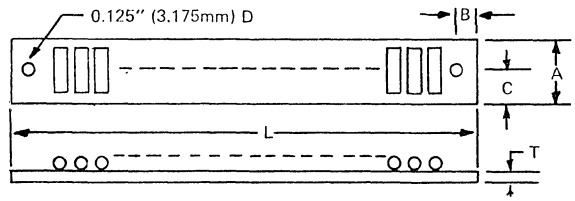

M941

	A	D	E	e1
M941	11.7	8.7	5.0	1.90 3.10
M941a	11.7	8.7	5.3	2.10 3.30
M941b	11.7	8.7	6.9	3.20 4.90
M941c	11.7	8.7	7.4	3.50 5.50
M941d	11.7	8.7	7.7	3.80 5.70

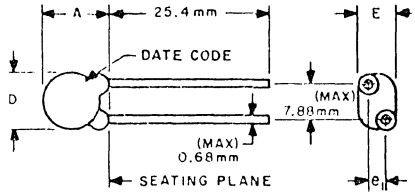

DIMENSIONS IN MM

M942

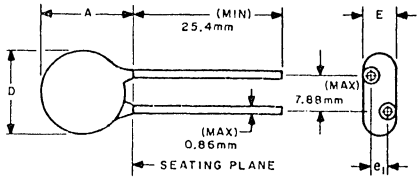

CONFIGURATION "A"

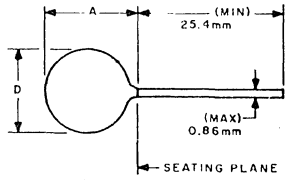

CONFIGURATION "B"

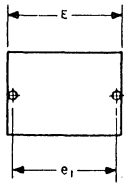

	A	D	E	e1
M942	18.9	16.4	4.4	1.70 2.70
M942a	18.9	16.4	5.3	2.10 3.50
M942b	18.9	16.4	6.7	3.40 5.00
M942c	18.9	16.4	7.3	3.70 5.50
M942d	18.9	16.4	8.2	4.20 6.40
M942e	18.9	16.4	10.3	5.40 8.50
M942f	18.9	16.4	10.7	5.90 8.80
M942g	18.9	16.4	11.1	6.40 9.20
M942h	18.9	16.4	11.6	6.70 9.60
M942j	18.9	16.4	12.4	6.90 10.50
M942k	18.9	16.4	18.4	11.70 16.50
M942m	25.5	22.5	5.3	2.10 3.50
M942n	25.5	22.5	7.3	3.50 5.60
M942p	25.5	22.5	8.2	4.40 6.50
M942q	27.9	24.1	10.4	5.50 8.70
M942r	27.9	24.1	11.1	6.00 9.40
M942s	27.9	24.1	12.4	6.80 10.70
M942t	27.9	24.1	18.6	12.00 16.90
M942u	22.50	22.50	5.30	2.10 3.50
M942v	16.40	16.40	5.30	2.10 3.30
M942w	22.50	22.50	7.30	3.50 5.60
M942x	16.40	16.40	6.70	3.40 5.00
M942y	24.10	24.10	7.30	3.50 5.60
M942z	24.10	24.10	8.20	4.40 6.50
M942aa	24.10	24.10	10.80	6.00 9.00

Dimensions in mm

M943

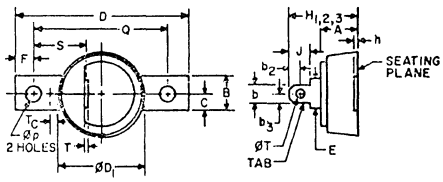

SYMBOL	MILLIMETERS			NOTES
	MIN.	NOM.	MAX.	
A			14.3	
b			6.6	1
b_2		4.1		
b_3		3.2		
B			12.9	
C			6.5	
D			66.2	
$ØD_1$			33.5	
E		11.2		
F		7.7		
h		.8	.9	
H_1	23.2		25.5	3
H_2	24.6		28.3	3
H_3	26.3		32.6	3
J			8.1	
Øp	5.8		6.0	
Q	50.6	50.8	51.0	
S		19.2		
T			1.0	1
ØT	2.8			
T_c		3.2		2

NOTES:
1. Tab is designed to fit 1/4" quick connect terminal.
2. Case temperature is measured at T_C on top surface of base plate.
3. H_1 M943 devices
   H_2 M943a devices
   H_3 M943b devices
4. Electrical connection: top terminal and base plate.

15. OUTLINE DRAWINGS

M946

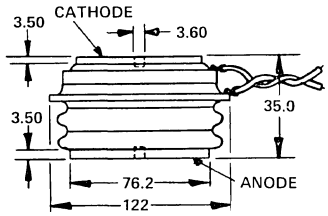

DIMENSIONS IN "MM"

M947

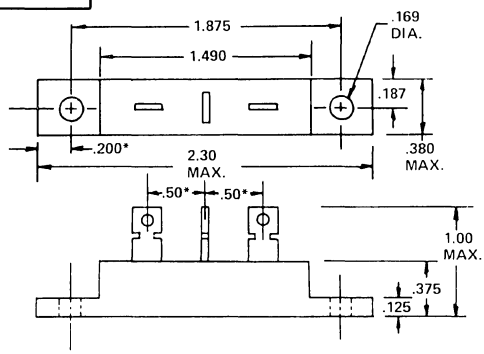

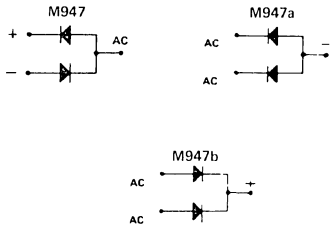

TOLERANCE .015 UNLESS SPECIFIED
* TYPICAL DIMENSIONS

M948

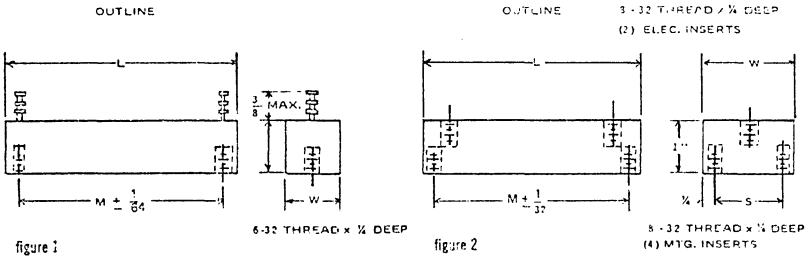

DIMENSIONS IN MM

	L	W	M	S	Fig
M948	3.0	1.0	2.5		1
M948a	3.5	1.0	3.0		1
M948b	4.0	1.0	3.5		1
M948c	4.75	1.0	4.25		1
M948d	5.5	1.0	5.0		1
M948e	6.0	1.0	5.5		1
M948f	6.5	1.0	6.0		1
M948g	7.0	1.0	6.5		1
M948h	4.0	2.0	3.5	1.5	2
M948j	6.0	2.0	5.5	1.5	2
M948k	8.0	2.0	7.5	1.5	2
M948m	4.0	3.0	3.5	2.5	2
M948n	6.0	3.0	5.5	2.5	2
M948p	8.0	3.0	7.5	2.5	2
M948q	4.0	4.0	3.5	3.5	2
M948r	6.0	4.0	5.5	3.5	2

M950

Dimensions in mm

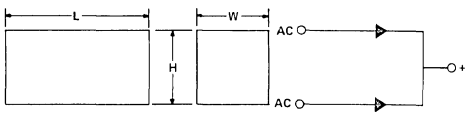

	H	L	W
M950	.75	1.5	.75
M950a	.75	2.5	.75
M950b	.75	3.0	.75
M950c	.75	4.0	.75
M950d	.75	4.5	.75
M950e	.75	5.0	.75
M950f	.75	5.5	.75
M950g	.75	6.0	.75
M950h	.75	6.5	.75
M950j	.75	7.0	.75
M950k	1.0	3.0	1.0
M950m	1.0	4.0	1.0
M950n	1.0	5.0	1.0
M950p	1.0	6.0	1.0
M950q	1.0	4.0	2.0
M950r	1.0	4.75	2.0
M950s	1.0	5.5	2.0
M950t	1.0	6.0	2.0
M950u	1.0	6.5	2.0
M950v	1.0	7.0	1.0
M950w	1.0	8.0	2.0
M950x	1.0	4.0	3.0
M950y	1.0	6.0	3.0
M950z	1.0	8.0	3.0
M950aa	1.0	4.0	4.0
M950ab	1.0	6.0	4.0
M950ac	1.25	8.0	2.0

	H	L	W
M950ad	1.25	10.0	2.0
M950ae	1.25	12.0	2.0
M950af	1.5	8.0	4.0
M950ag	1.5	12.0	4.0
M950ah	1.5	14.0	4.0
M950aj	.75	3.5	.75
M950ak	.750	2.50	1.50
M950al	.750	3.00	1.50
M950am	.750	4.50	1.50
M950an	.750	5.00	1.50
M950ao	.750	4.00	1.50
M950ap	.750	4.50	1.50
M950aq	.750	5.00	1.50
M950ar	.750	5.50	1.50
M950as	.750	6.00	1.50
M950at	.750	3.50	1.50
M950au	.750	5.00	1.50
M950av	.750	5.50	1.50
M950aw	.750	6.00	1.50
M950ax	.750	6.00	1.50
M950ay	.750	6.50	1.50
M950az	.750	6.50	1.50
M950ba	.750	7.00	1.50
M950bb	.750	7.00	1.50
M950bc	1.750	8.00	2.00
M950bd	1.750	10.0	2.00
M950be	1.750	12.0	2.00

M953

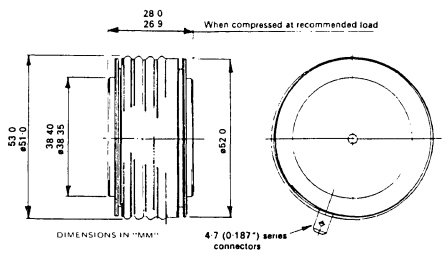

M954

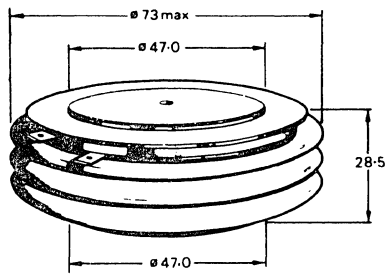

DIMENSIONS IN "MM"

M957

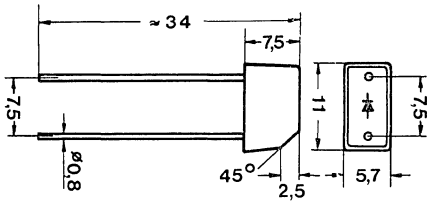

DIMENSIONS IN "MM"

15. OUTLINE DRAWINGS

M958

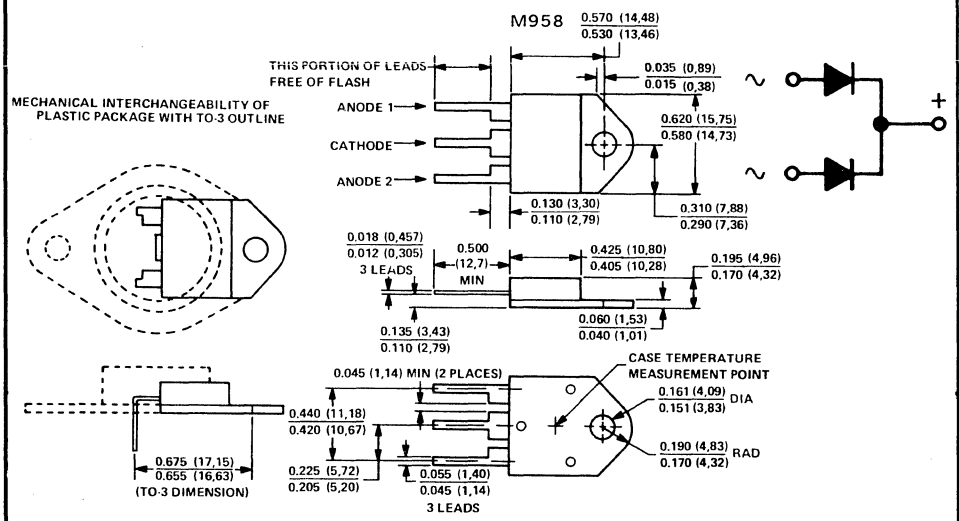

ALL DIMENSIONS ARE IN INCHES AND PARENTHETICALLY IN MILLIMETERS. INCH DIMENSIONS GOVERN.

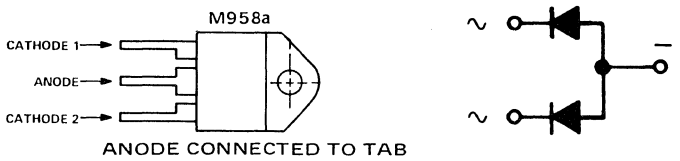

M959

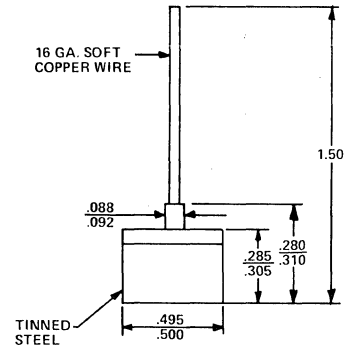

M960

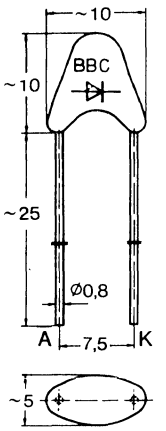

DS 0,8 DSA 0,8 DSD 0,8
DS 1 DSA 1
DIMENSIONS IN "MM"

M962

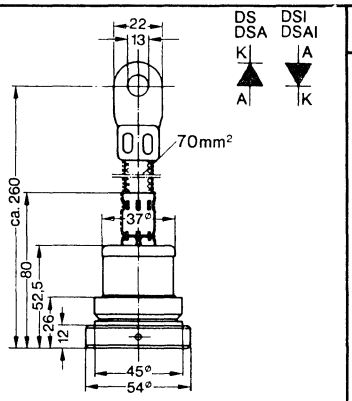

DS(I) 250 N DSA(I) 250 N
DS(I) 400 N DSA(I) 400 N

M968

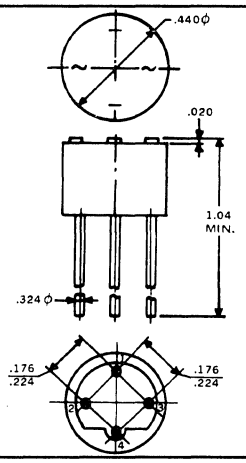

1. AC
2. DC (−)
3. AC
4. DC (+)

M969

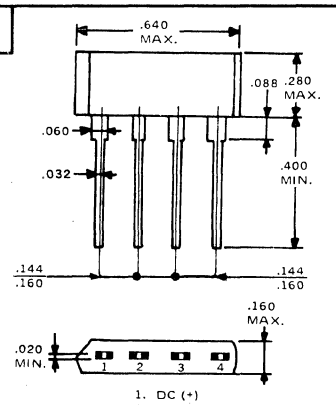

1. DC (+)
2. AC
3. AC
4. DC (−)

M973

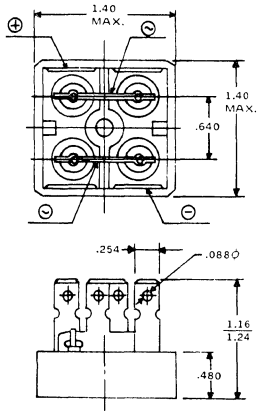

M974

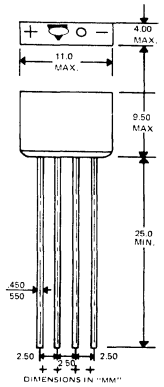

M975

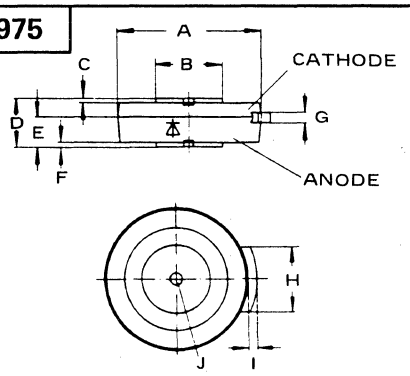

	A	B	C	D	E	F	G	H	I	J
M975	41Ø	19,6Ø	1.1	14	8,5	1.1	3,5	19	2	3,5x1,6Ø
M975a	50Ø	28Ø	1.1	14	8,5	1.1	3,5	19	2	3,5x1,6Ø

15. OUTLINE DRAWINGS

M976

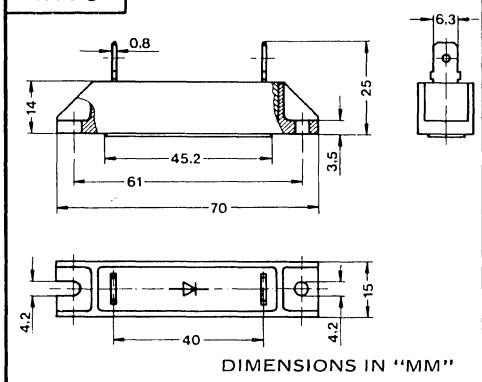

M977

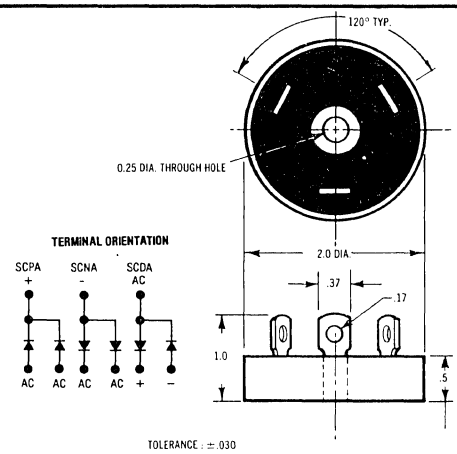

M978

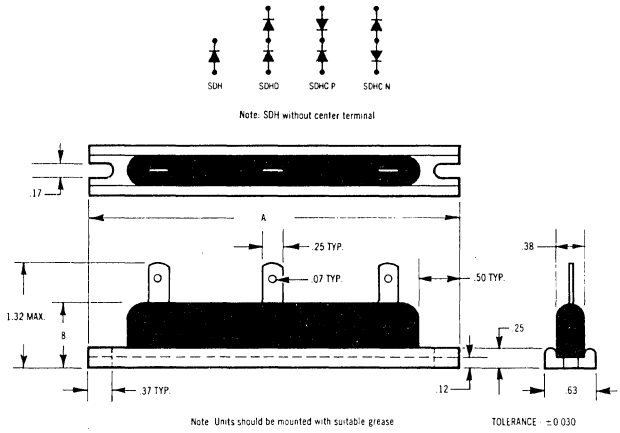

M979

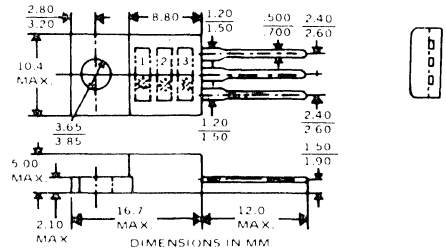

M980

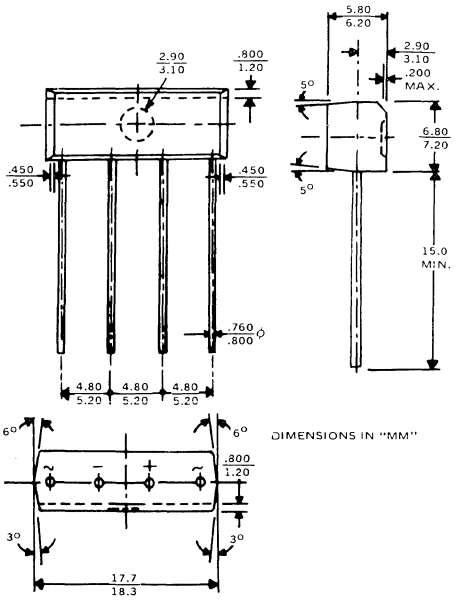

M981

DIM	M981 MILLIMETERS MIN	M981 MILLIMETERS MAX	M981 INCHES MIN	M981 INCHES MAX	M981a MILLIMETERS MIN	M981a MILLIMETERS MAX
A	14.23	15.87	0.560	0.625		16.5
B	9.66	10.66	0.380	0.420		11.0
C	3.56	4.82	0.140	0.190		4.8
D	0.51	1.14	0.020	0.045		0.8
F	3.531	3.733	0.139	0.147	3.4	3.8
G	2.29	2.79	0.090	0.110		
H		6.35	–	0.250		5.0
J	0.38	0.64	0.015	0.025		
K	12.70	14.27	0 500	0.562	12.0	
L	1.14	1.77	0.045	0.070		1.4
N	4.83	5.33	0.190	0.210		5.08
Q	2.54	3.04	0.100	0.120	6.0	
R	2.04	2.92	0.080	0.115	2.1	2.7
S	1.14	1.39	0.045	0.055	1.1	1.5
T	5.85	6.85	0.230	0.270	6.0	

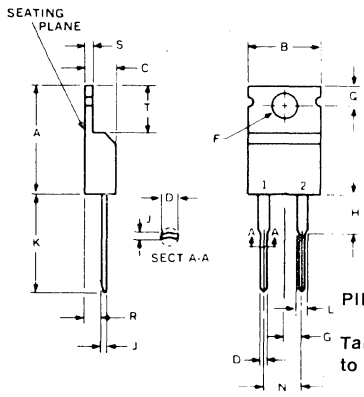

PIN 1. Cathode
2. Anode
Tab is connected to Cathode.

M982

* DASH NUMBERS INDICATE LENGTH IN INCHES.

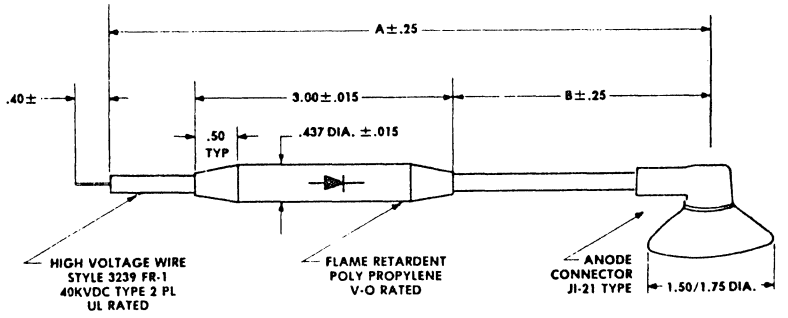

15. OUTLINE DRAWINGS

M983

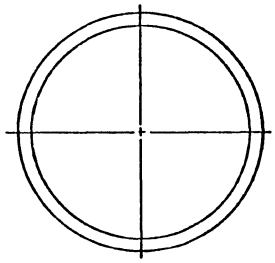

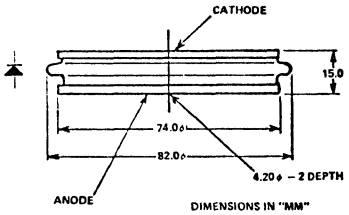

M984

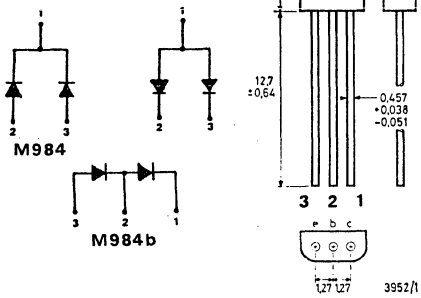

M985

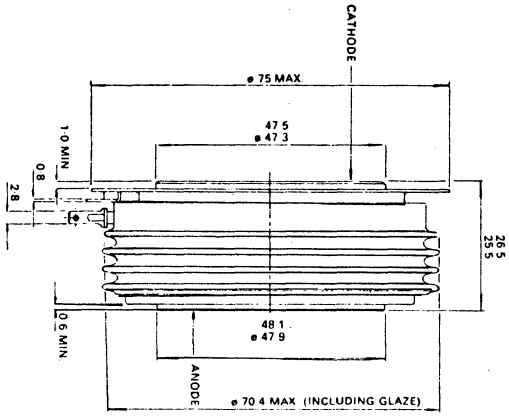

M986

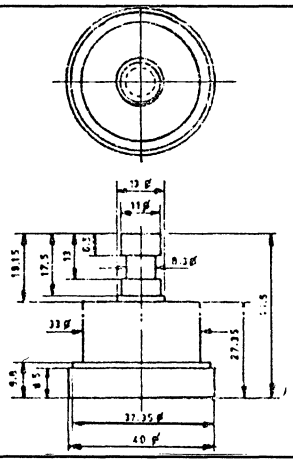

M987

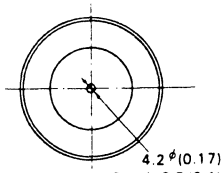

MM (INCH)

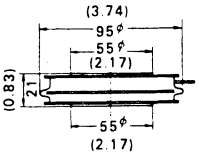

Type	Direction of polarity
A11	▲

Weight : 850 (g)

M989

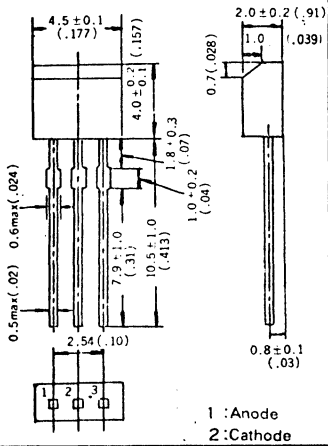

MM (INCH)

M990

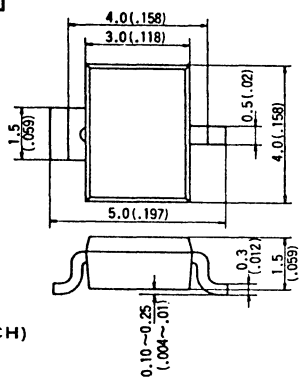

MM (INCH)

M992

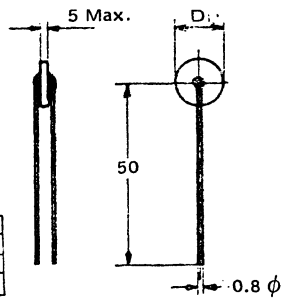

	D
M992	12.5
M992a	15
M992b	20

M993

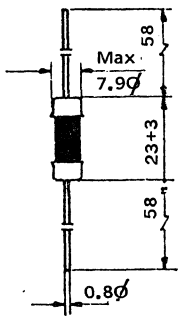

15. OUTLINE DRAWINGS

M996

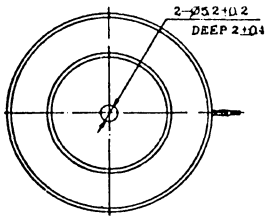

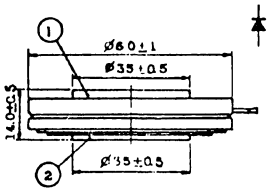

1 CATODE
2 ANODE

M997

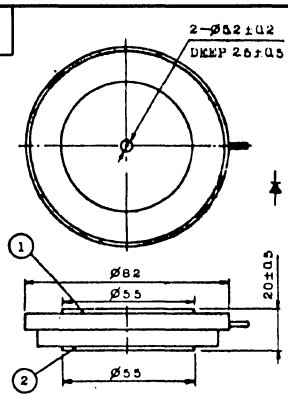

1. CATHODE
2. ANODE

M998

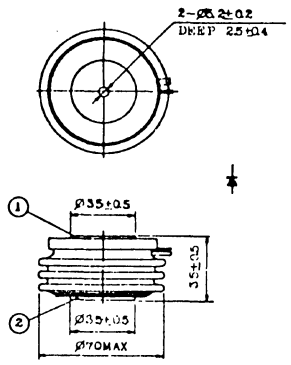

1. CATHODE
2. ANODE

M999

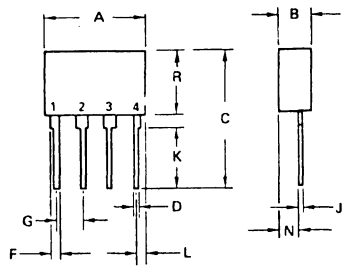

DIM	MILLIMETERS MIN	MILLIMETERS MAX	INCHES MIN	INCHES MAX
A	14.99	15.49	0.590	0.610
B	4.57	5.08	0.180	0.200
C	-	20.57	-	0.810
D	0.76	1.02	0.030	0.040
F	1.02	1.27	0.040	0.050
G	3.68	3.94	0.145	0.155
J	0.56	0.71	0.022	0.028
K		9.02		0.355
L	1.78	2.03	0.070	0.080
N	2.54	2.79	0.100	0.110
R	9.40	10.03	0.370	0.395

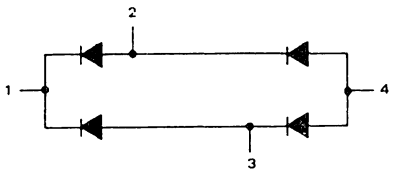

M1000

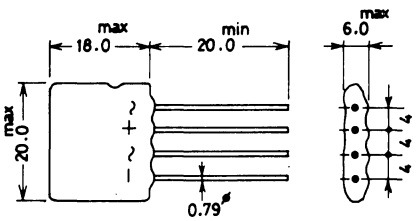

DIMENSIONS IN "mm"

M1003

Suffix	A
M1003a	1.65
M1003b	2.20
M1003c	2.75
M1003d	3.85
M1003e	4.95
M1003f	6.05
M1003g	7.15
M1003h	8.25
M1003i	9.35
M1003j	11.55
M1003k	13.75

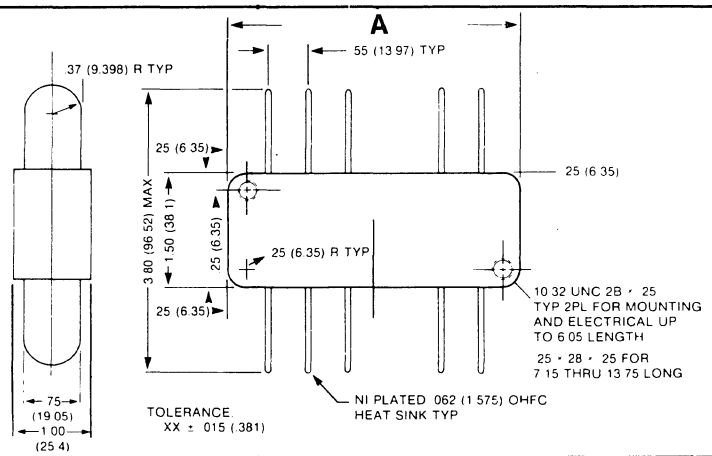

M1004

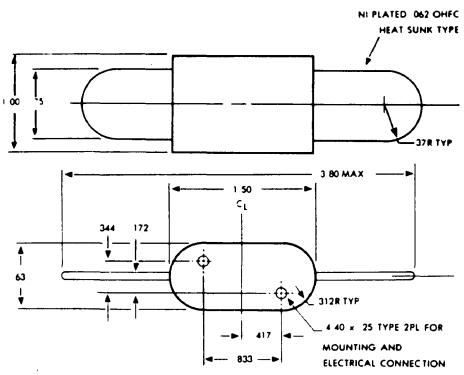

M1007

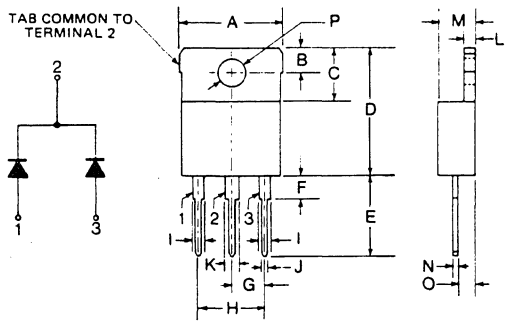

	A	B	C	D	E	F	G	H	I	J	K	L	M	N	O	P
M1007	.610 MAX	.155	.340	.790 MAX	.500 MIN	.140 MAX	.200	.400	.063	.045	.080	.060	.230 MAX	.020	.100	.158
M1007a	.610	.165	.350	.790	.590	.140	.225	.440	.067	.050	.090	.060	.230	.030	.120	.165
M1007b	.602	.181	.315	.815	.590		.216	.433	.047	.047	.047	.059	.177	.020	.110	.163

15. OUTLINE DRAWINGS

M1008

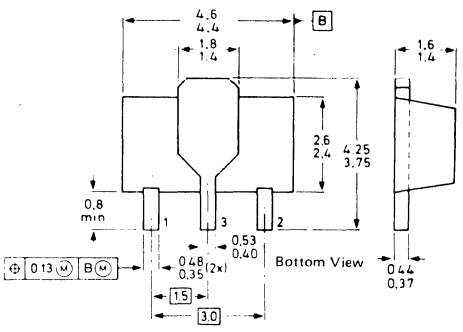

M1009

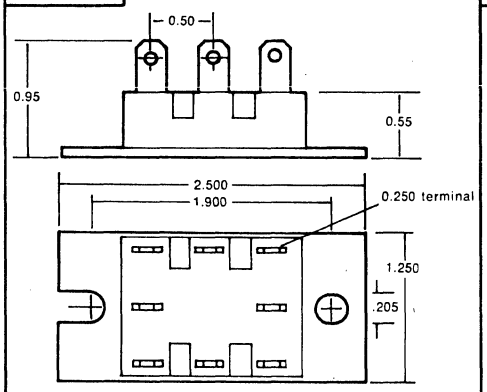

M1010

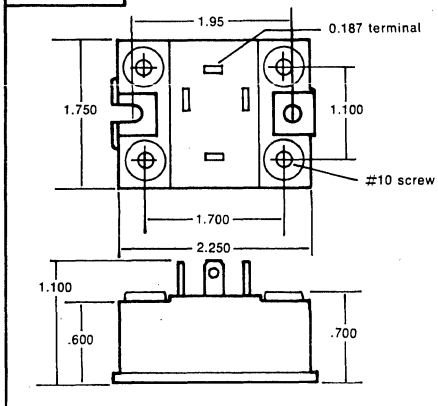

M1014

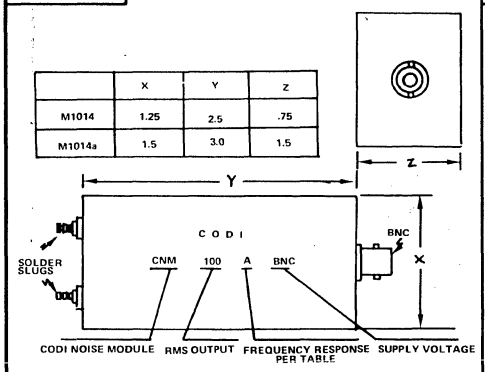

	X	Y	Z
M1014	1.25	2.5	.75
M1014a	1.5	3.0	1.5

M1016

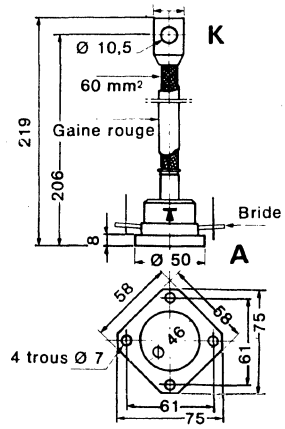

M1018

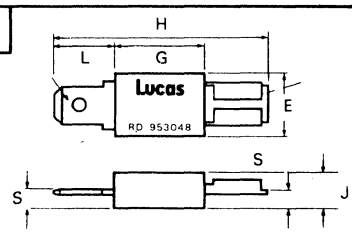

Ref.	Millimetres		Inches	
	Min.	Max.	Min.	Max.
E	10·9	11·3	0·429	0·445
G	15·3	15·7	0·602	0·618
H	36·35	37·41	1·431	1·473
J	6·3	6·7	0·248	0·264
L	10·33	10·59	0·407	0·417
S	2·60	3·00	0·102	0·118

M1019

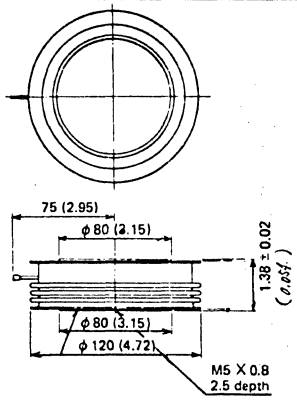

mm (inches)

M1021

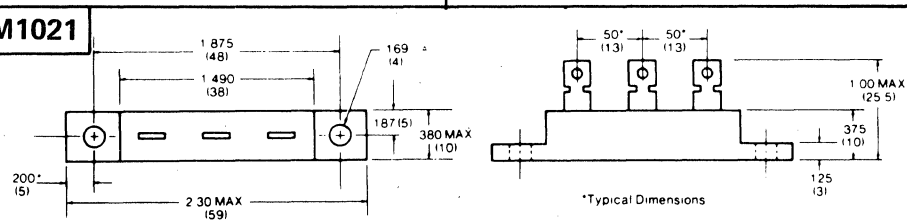

DIMENSIONS IN INCHES AND (MILLIMETERS)

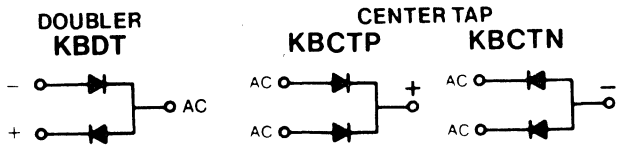

M1024

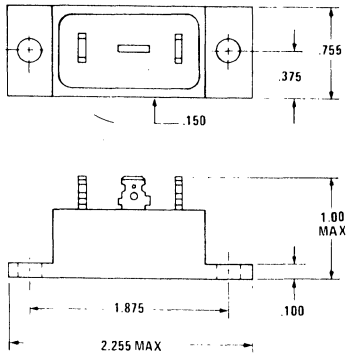

M1026

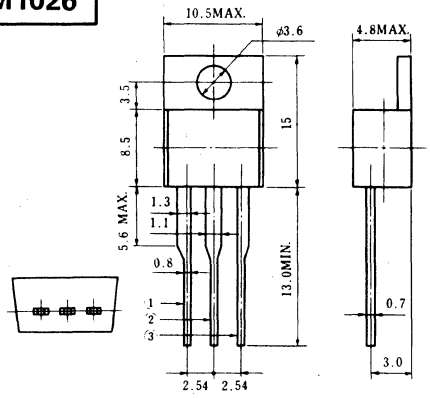

M1027

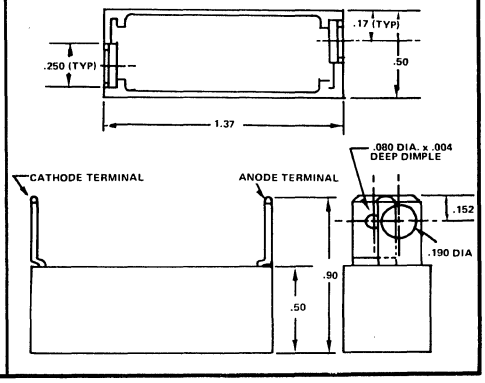

15. OUTLINE DRAWINGS

M1029

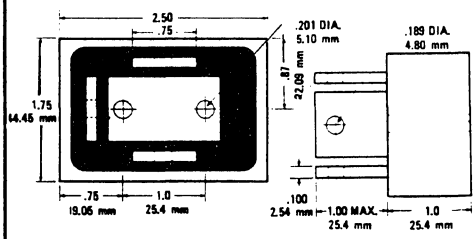

Metric equivalents are given for general information only and are based upon one inch = 25.4 MM.

TOLERANCE .XX ± .03

M1030

Dimensions in mm

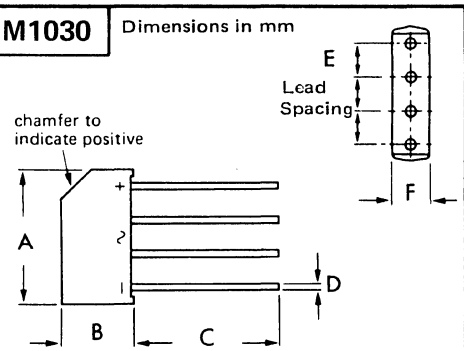

	A	B	C	D	E	F
M1030	19.0 MAX	10.0 MAX	19.0 MIN	1.05 MAX	5.08	5.30 MAX
M1030a	19.1	16.0	12.7 MIN	1.30 MAX	5.08	6.40 MAX
M1030b	19.1	15.9	25.4	1.0	5.1	6.4

M1031

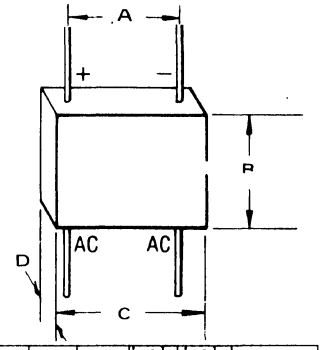

	A	B	C	D	Lead Dia.	Lead Lgth	Tolerance
M1031	.60	.63	.83	.27	.038 .042	.500 Min.	±.030
M1031a	.45	.50	.68	.25	.029 .033	1.0 Min.	
M1031b	.37	.41	.62	.12			±.030

M1033

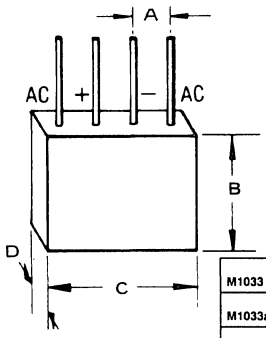

	A	B	C	D	Lead Dia.	Lead Lgth	Tolerance
M1033	.20	.63	.82	.27	.038 .042	500 MIN	±.030
M1033a	.15	.50	.68	.25	.029 .033	1.0 MIN	
M1033e	.150 TYP	.500 MAX	.750 MAX	.300 MAX	.030 MAX		
M1033f	.150 TYP	.500 MAX	.680 MAX	.250 MAX	.030 MAX		

M1035

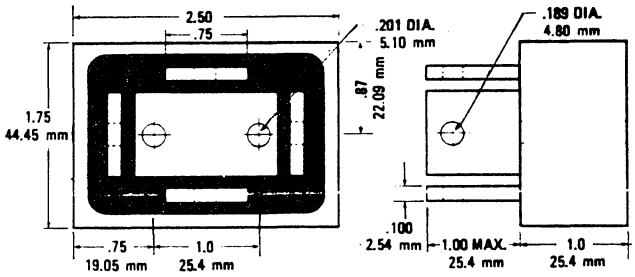

M1036

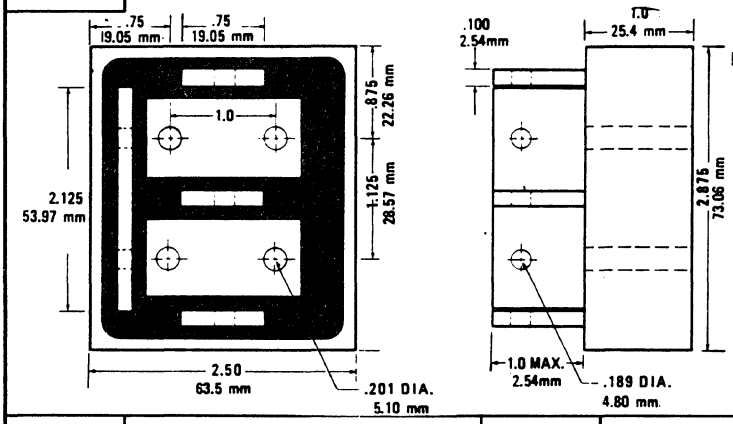

M1037

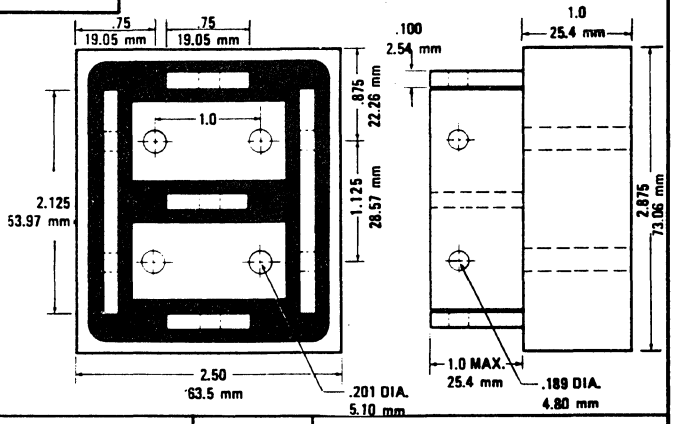

M1040

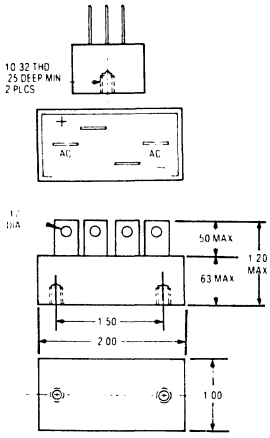

M1041

M1041a: Device is Rectangular.

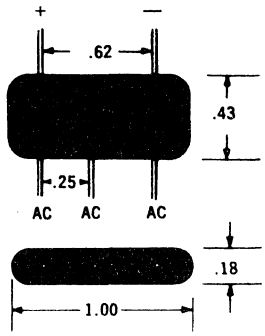

Tolerance ±.03
Lead Spacing Measured

15. OUTLINE DRAWINGS

M1043

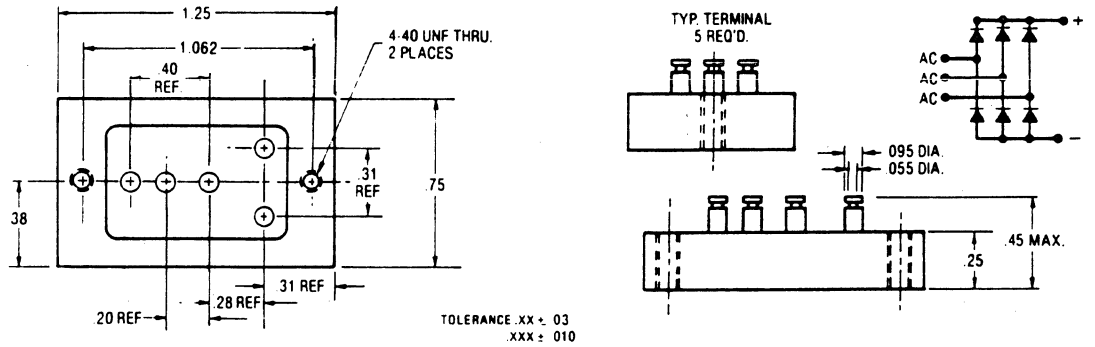

M1044

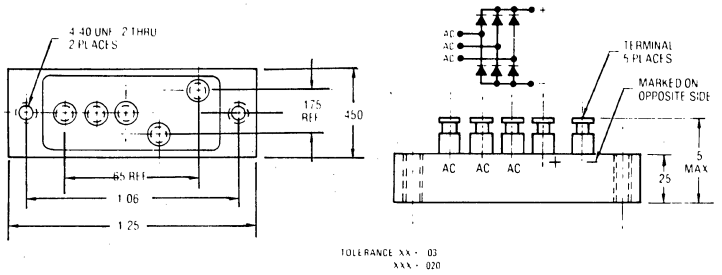

M1045

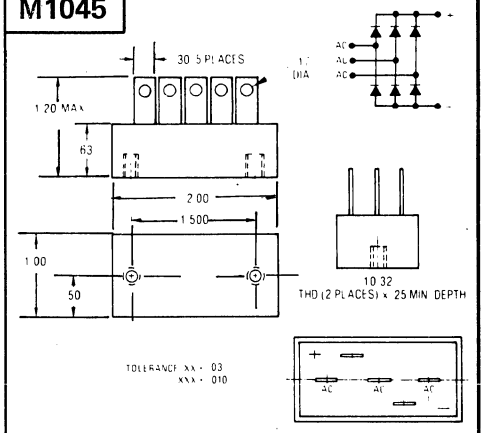

M1046

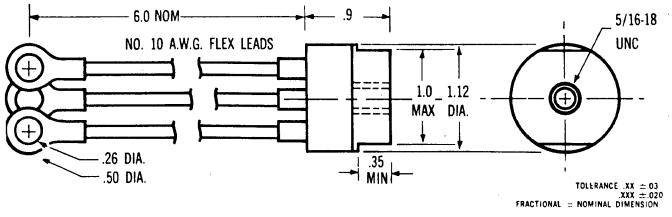

M1047

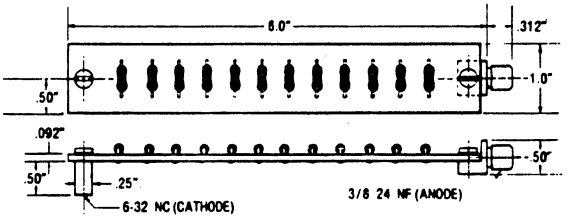

M1048

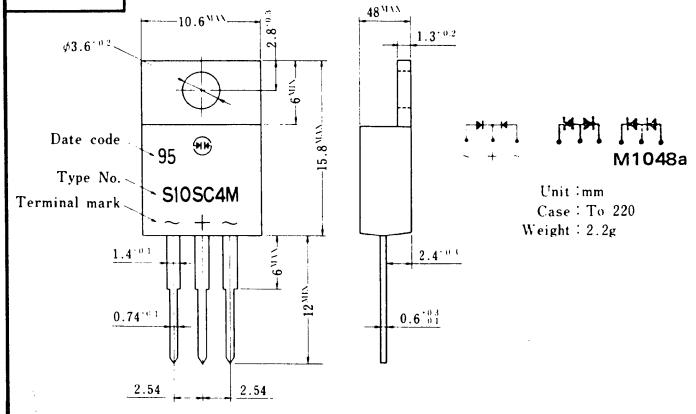

M1017

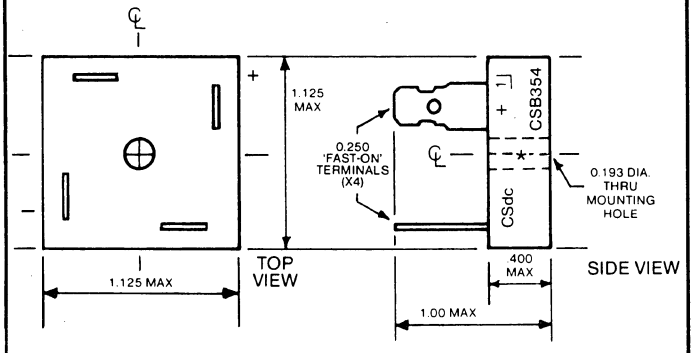

15. OUTLINE DRAWINGS

M1049

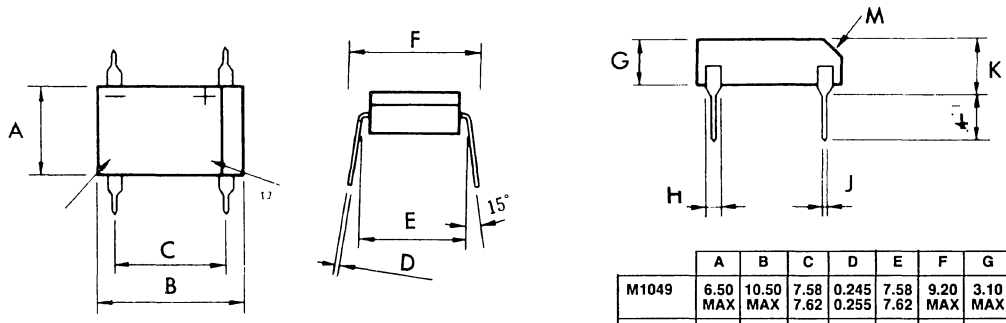

	A	B	C	D	E	F	G	H	J	K	L	M
M1049	6.50 MAX	10.50 MAX	7.58 7.62	0.245 0.255	7.58 7.62	9.20 MAX	3.10 MAX	1.38 1.42	.500 .700	4.10 MAX	4.00 MIN	1.00
M1049a	6.20 6.50	9.00 9.30	5.00 5.20	.250	7.60 8.90	7.60 8.90	3.20 3.40	1.45		4.70 4.90	3.90 4.20	1.00
M1049c	6.2 / 6.5	9.0 / 9.3	5.0 / 5.2		7.6 / 8.9	7.4 / 7.9	3.2 / 3.4		4.1 / 5.1	4.7 / 4.9	3.9 / 4.2	

Dimensions in mm

M1050

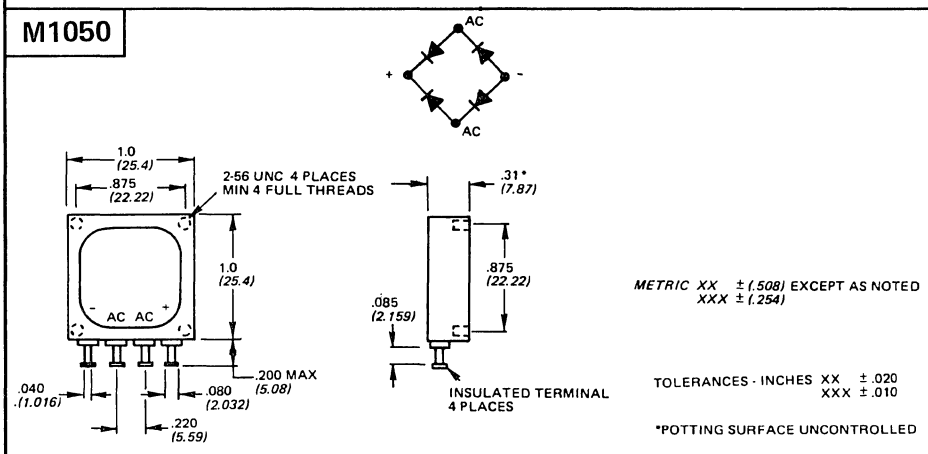

M1055

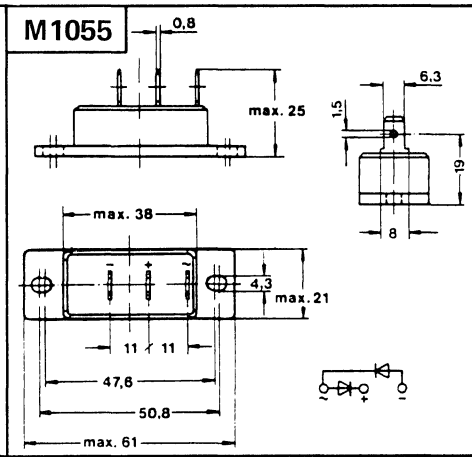

M1056

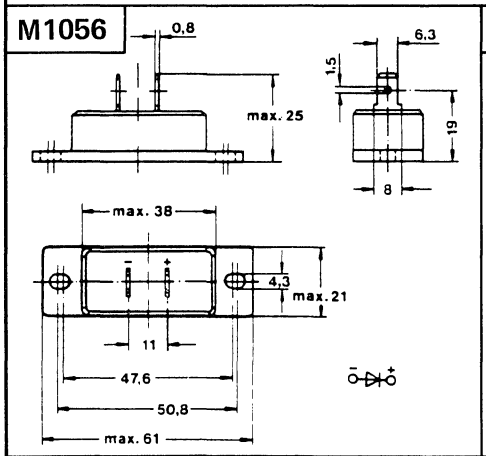

M1058

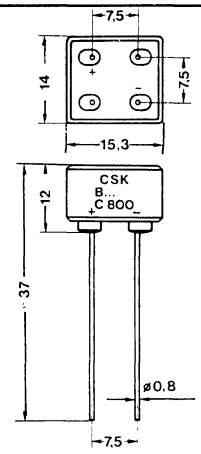

M1059

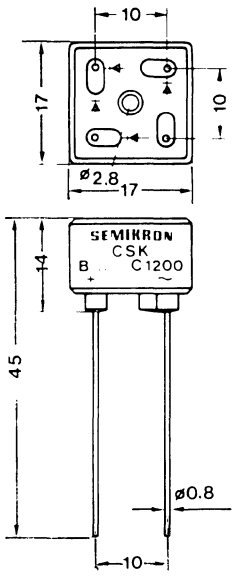

M1060

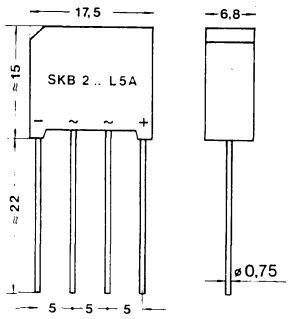

M1063

Dimensions in mm

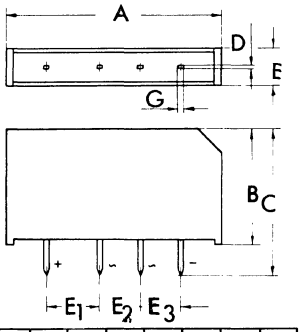

	A	B	C	D	E1	E2	E3	F	G
M1063	40.00	21.0	27.0	0.30	10.0	7.50	7.50	7.00	1.20
M1063a	26.0	11.0	17.0	0.30	7.50	7.50	7.50	5.30	1.20

15. OUTLINE DRAWINGS

M1064

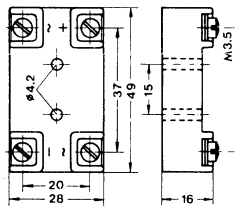

MSK B . . . / . . .-1,5
w = 35 g

M1065

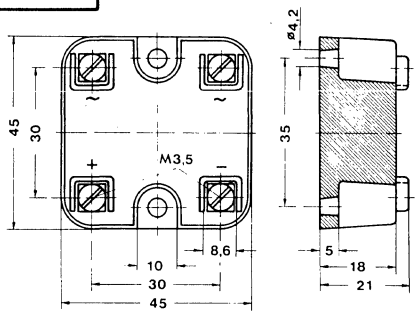

SKBa B 500/445 - 4
w = 60 g

M1066

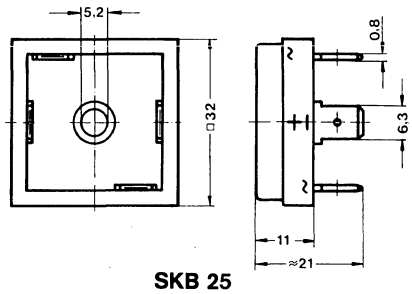

SKB 25
w = 24 g

M1067

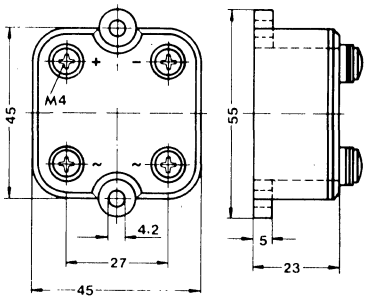

SKB 30/ . . . A 1
w = 125 g

M1068

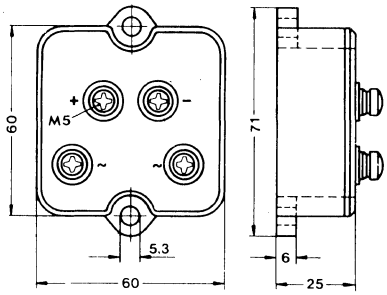

SKB 50/ . . . A 3
w = 250 g

M1069

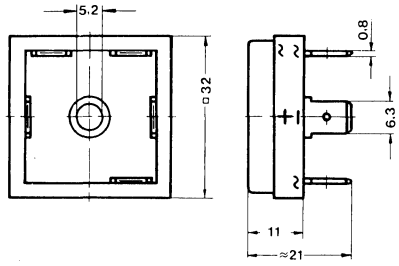

SKD 25
w = 26 g

M1070

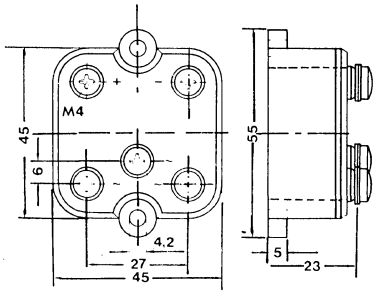

SKD 30/ . . A 1
w = 125 g

M1071

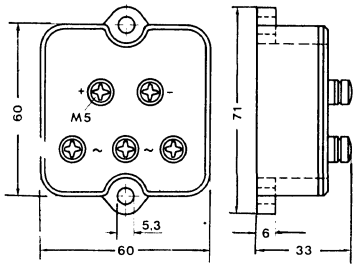

SKD 50/ . . A 3
w = 250 g

M1073

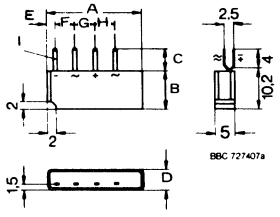

B 1906 L B 1210 L
B 1912 L B 1220 L
B 1240 L

B 1280 L

	A	B	C	D	E	F	G	H	I
M1073	24	9.8	5.5	10	2.0	5.0	5.0	5.0	1.1x0.3
M1073a	40	21.5	9.0	10	5.0	7.5	7.5	7.5	1.1x0.3
M1073b	40	21.5	9.0	6.5	9.0	7.5	7.5	10	1.1x0.3
M1073c	40	21.5	9.0	10	9.0	7.5	7.5	10	1.1x0.3

M1074

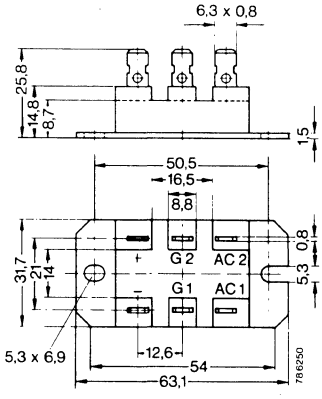

15. OUTLINE DRAWINGS

M1075

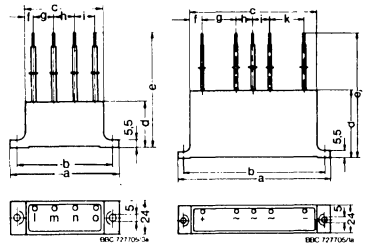

	a	b	c	d	e	f	g	h	i	k
M1075	80	70	57	33,5	260	6	15	15	15	
M1075a	80	70	57	58,5	260	6	15	15	15	
M1075b	80	70	57	58,5	460	6	15	15	15	
M1075c	80	70	57	58,5	560	6	15	15	15	
M1075d	135	125	112	58,5	260	11	30	30	30	
M1075e	135	125	112	58,5	260	11	32,5	25	32,5	
M1075f	135	125	112	58,5	260	8	30	18	18	30

M1076

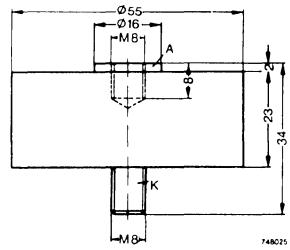

M1077

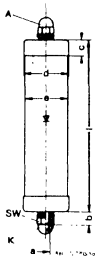

	a	b	c	d	e	l	width over flats
M1077	M 5	8	7,5	17,5	16	199	8
M1077a	M 5	8	6,5	13,5	12	83	8
M1077b	M 8	12	14	43,5	41,5	204	13
M1077c	M 8	12	14	43,5	41,5	254	13

M1078

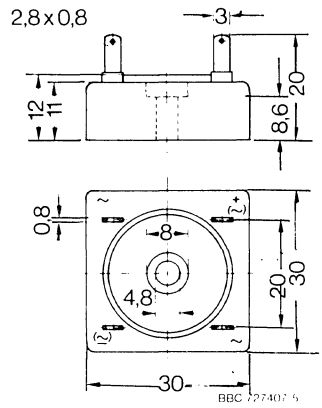

M1079

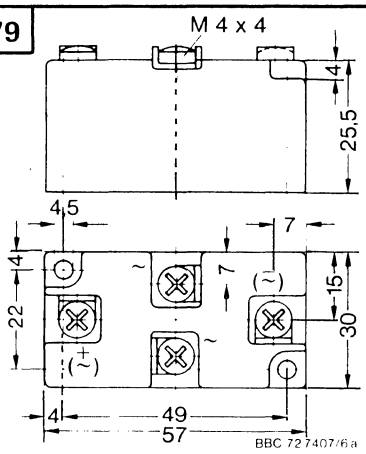

M1080

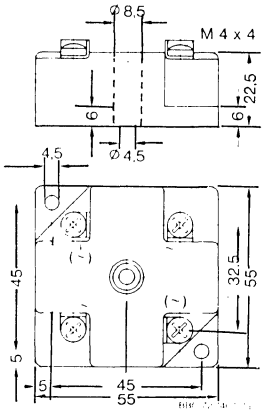

M1081

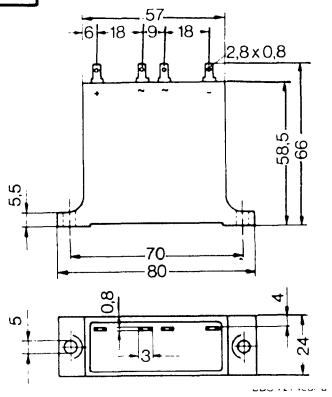

M1082

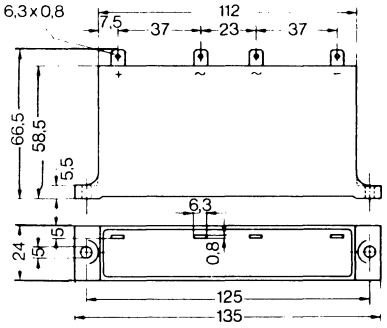

M1084

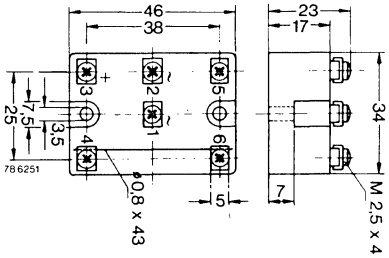

15. OUTLINE DRAWINGS

M1085

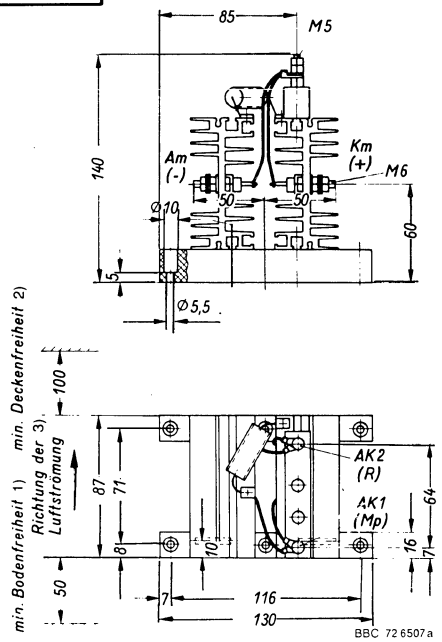

1) Min. floor clearance
2) Min. ceiling clearance
3) Direction of air flow
4) Not mounted on 1-phase-bridge

M1086

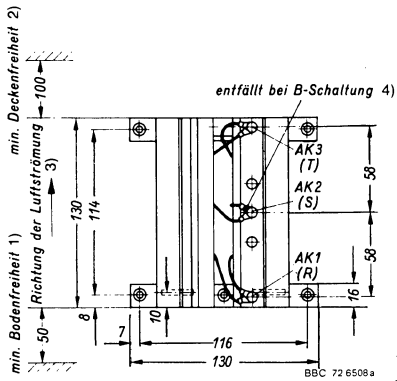

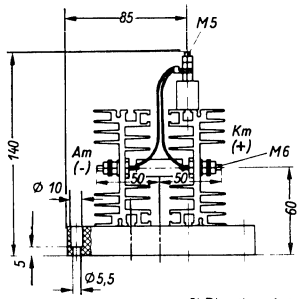

1) Min. floor clearance
2) Min. ceiling clearance
3) Direction of air flow
4) Not mounted on 1-phase-bridge

M1087

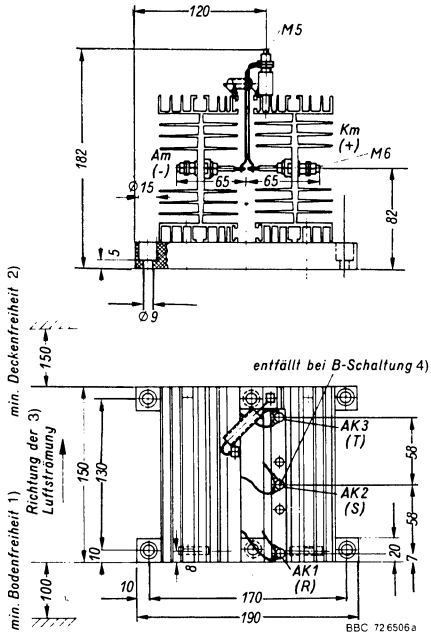

1) Min. floor clearance
2) Min. ceiling clearance
3) Direction of air flow
4) Not mounted on 1-phase-bridge

M1088

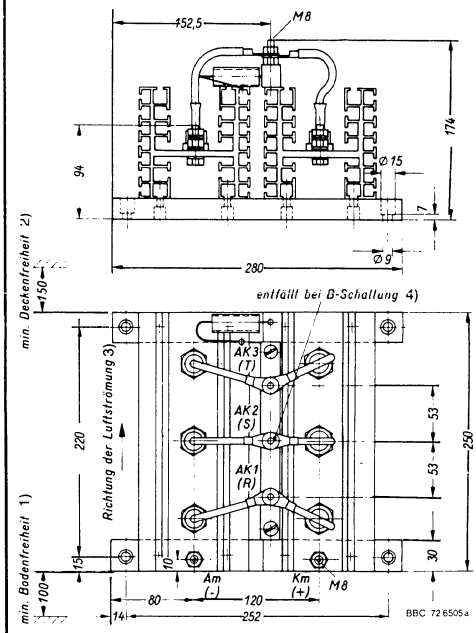

1) Min. floor clearance
2) Min. ceiling clearance
3) Direction of air flow
4) Not mounted on 1-phase-bridge

M1089

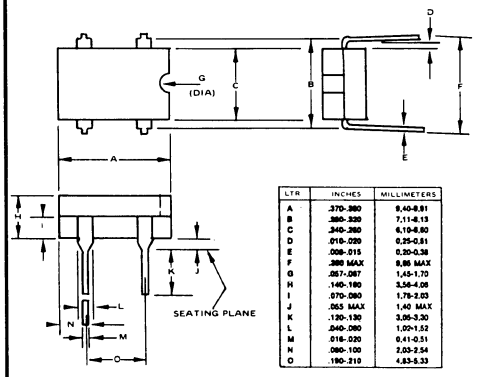

LTR	INCHES	MILLIMETERS
A	.370-.380	9.40-9.91
B	.280-.320	7.11-8.13
C	.240-.260	6.10-6.60
D	.010-.020	0.25-0.51
E	.008-.015	0.20-0.38
F	.380 MAX	9.65 MAX
G	.057-.067	1.45-1.70
H	.140-.160	3.56-4.06
I	.070-.080	1.78-2.03
J	.055 MAX	1.40 MAX
K	.120-.130	3.05-3.30
L	.040-.060	1.02-1.52
M	.016-.020	0.41-0.51
N	.080-.100	2.03-2.54
O	.190-.210	4.83-5.33

M1090

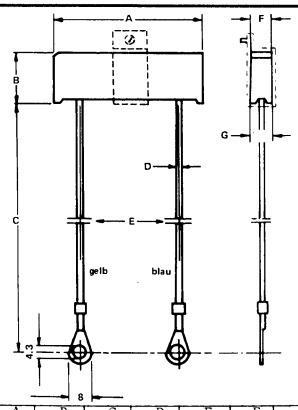

	A	B	C	D	E	F	G
M1090	54	19	150	.80	45.7	7.3	7.5
M1090a	54	19	6.0	.80	45.7	7.3	7.5

M1091

LTR	INCHES	MILLIMETERS
A	.162–.168 Dia.	4,11–4,27 Dia.
B	.345–.355 Dia.	8,76–9,02 Dia.
C	.23– 27 Typ.	5,84–6,86 Typ.
D	.138– 158 Typ.	3,51–4,01 Typ.
E	.38– 42 Typ.	9,65–10,67 Typ.
F	.245–.255 Typ.	6,22–6,48 Typ.
G	.85–.89 Square	21,59–22,61 Square
H	.76–.78 Square	19,30–19,81 Square
I	.030–.034 Typ.	,76–,86 Typ.
J	.09–.11	2,29–2,79
K	.38–.42	9,65–10,67
L	.29–.30	7,37–7,62
M	.75 Max.	19,05 Max.

Overall package height with leads formed up at 90° angles from the mounting plan is .75"–19,05mm maximum.

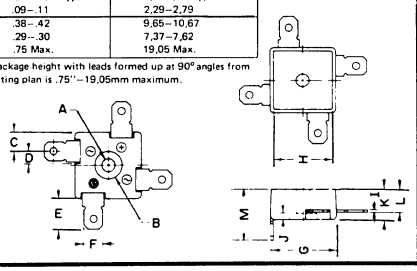

M1092

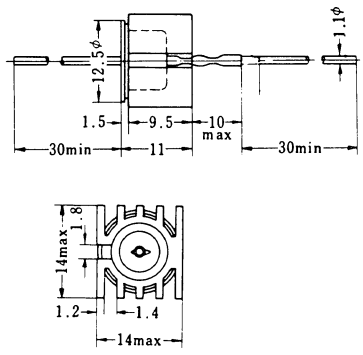

15. OUTLINE DRAWINGS

M1093

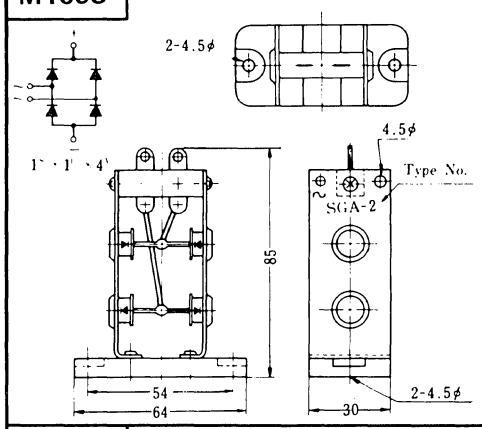

M1094

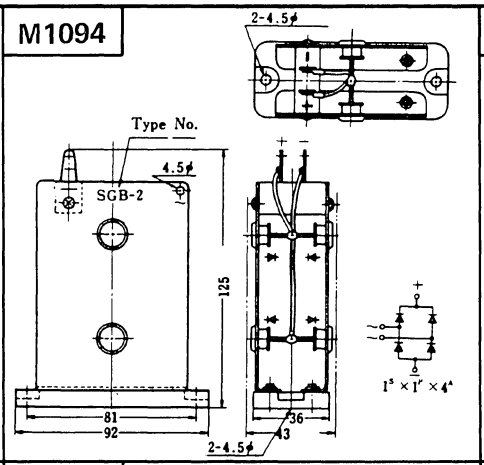

M1095

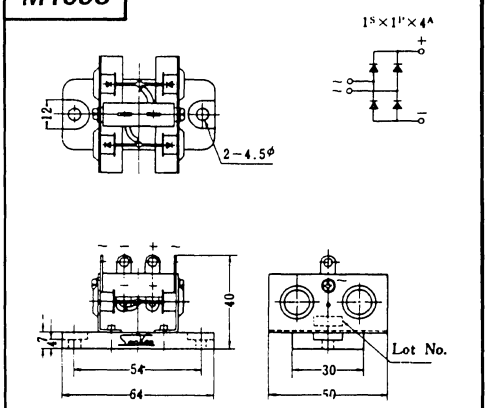

M1096

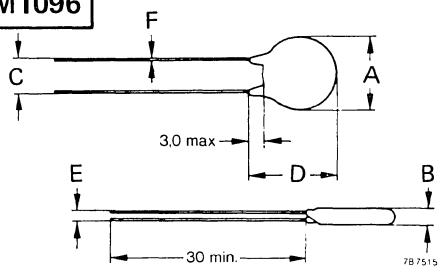

	A	B	C	D	E	F
M1096	7.0	3.7	5.0	10	1.6	.60
M1096a	7.0	4.2	5.0	10	2.0	.60
M1096b	7.0	4.4	5.0	10	2.2	.60
M1096c	7.0	5.4	5.0	10	3.2	.60
M1096d	7.0	5.7	5.0	10	3.5	.60
M1096e	9.0	3.7	5.0	12	1.6	.60
M1096f	9.0	4.2	5.0	12	2.0	.60
M1096g	9.0	4.4	5.0	12	2.2	.60
M1096h	9.0	5.4	5.0	12	3.2	.60
M1096i	9.0	5.7	5.0	12	3.5	.60
M1096j	13.5	3.7	7.5	16.5	1.4	.80
M1096k	13.5	4.0	7.5	16.5	1.7	.80
M1096l	13.5	4.1	7.5	16.5	1.8	.80
M1096m	13.5	4.6	7.5	16.5	2.2	.80
M1096n	13.5	4.8	7.5	16.5	2.4	.80
M1096o	14	5.8	7.5	17	3.4	.80
M1096p	14	6.2	7.5	17	3.7	.80
M1096q	14	6.5	7.5	17	4.1	.80
M1096r	14	7.6	7.5	17	5.2	.80
M1096s	14	8.0	7.5	17	5.6	.80
M1096t	17	3.7	7.5	20	1.4	.80
M1096u	17	4.0	7.5	20	1.7	.80
M1096v	17	4.1	7.5	20	1.8	.80
M1096w	17	4.6	7.5	20	2.2	.80
M1096x	17	4.8	7.5	20	2.4	.80
M1096y	17.5	5.6	7.5	20.5	3.4	.60
M1096z	17.5	6.2	7.5	20.5	3.7	.80
M1096aa	10	8	6.0 MIN			.80
M1096ab	13	8	7.5 MIN			.80
M1096ac	18	8	7.5 MIN			.80
M1096ad	24	9	10 MIN			.80

M1097

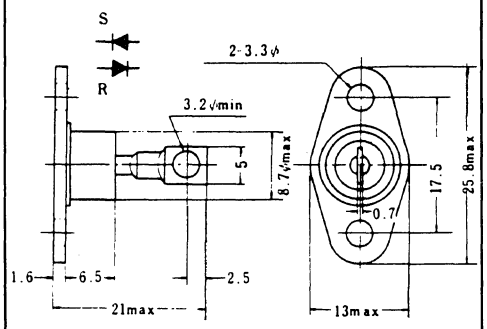

M1098

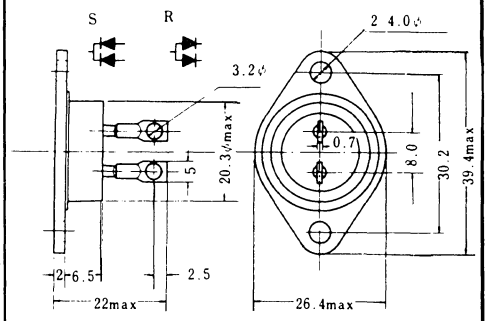

M1099

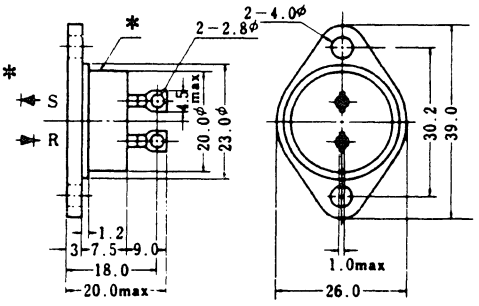

M1101

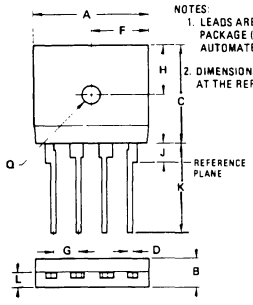

NOTES:
1. LEADS ARE SQUARE AND OFFSET ON PACKAGE (DIM L) TO ALLOW FOR AUTOMATED EQUIPMENT LOADING.
2. DIMENSIONS G & L SHALL BE MEASURED AT THE REFERENCE PLANE.

	MILLIMETERS		INCHES	
DIM	MIN	MAX	MIN	MAX
A	22.35	23.37	0.880	0.920
B	6.35	7.37	0.250	0.290
C	18.54	19.56	0.730	0.770
D	0.89	1.14	0.035	0.045
F	11.18	11.68	0.440	0.460
G	4.57	5.59	0.180	0.220
H	8.89	9.91	0.350	0.390
J	2.79	3.81	0.110	0.150
K	14.61	–	0.575	–
L	3.18	3.43	0.125	0.135
Q	3.56	4.06	0.140	0.160

CASE 117A-02

M1103

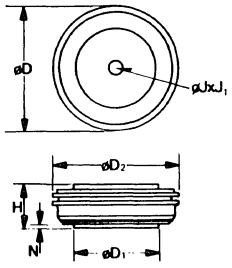

Symbol	Inches Min.	Inches Max.	Millimeters Min.	Millimeters Max.
øD	1.850	1.900	45.72	48.26
øD₁	1.140	1.180	28.96	29.77
øD₂	1.760	1.850	44.70	46.99
H	.545	.605	13.84	15.37
øJ	.135	.145	3.43	3.68
J₁	.072	.082	1.83	2.08
N	025		.64	

Creep Distance— 408 in Min (10.36mm)
Strike Distance— 209 in Min (5.16mm)

Finish—Nickel Plate
Approx Weight—4 oz (113g.)
1. Dimension "H" is a clamped dimension

15. OUTLINE DRAWINGS

M1105

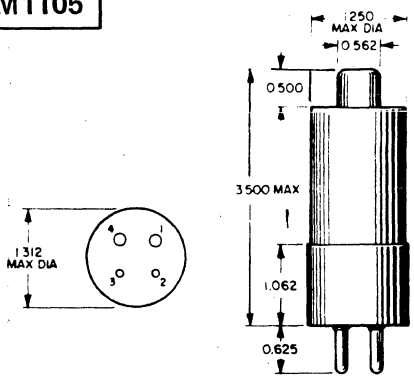

M1107

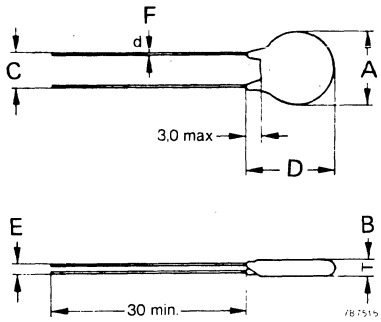

	A	B	C	D	E	F
M1107a	17.5	6.5	7.5	20.5	4.1	.80
M1107b	17.5	7.6	7.5	20.5	5.2	.80
M1107c	17.5	8.0	7.5	20.5	5.6	.80
M1107d	18	12.2	15	22	9.5	.80
M1107e	23	4.6	10	27	2.0	1.0
M1107f	23	5.0	10	27	2.4	1.0
M1107g	23	5.3	10	27	2.7	1.0
M1107h	24	6.4	10	28	3.7	1.0
M1107i	24	6.7	10	28	4.0	1.0
M1107j	24	6.9	10	28	4.4	1.0
M1107k	24	8.1	10	28	5.6	1.0
M1107l	24	8.5	10	28	6.0	1.0
M1107m	25	12.2	15	30	9.5	1.0

M1108

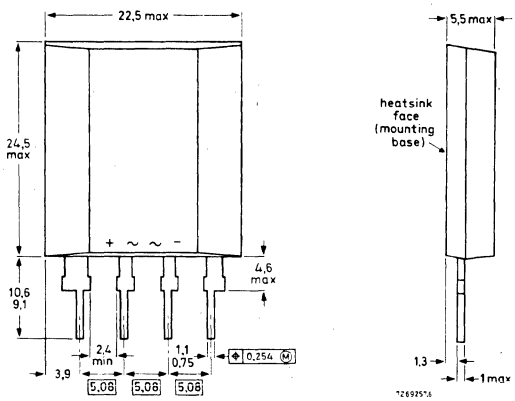

M1109

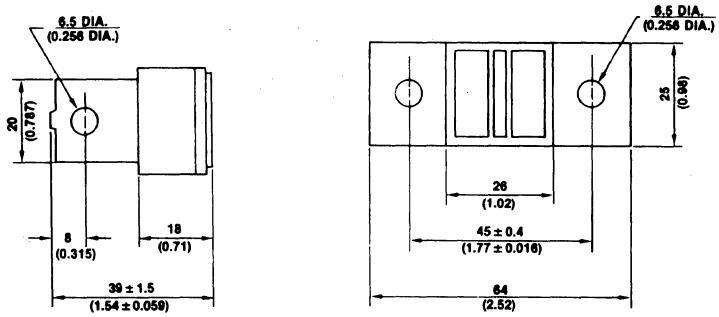

M1110

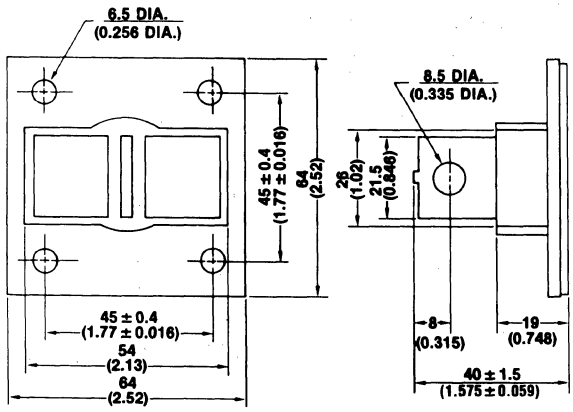

15. OUTLINE DRAWINGS

M1112

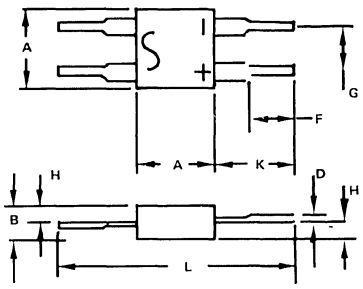

NOTES:
1. LEAD DIM "D" TO BE MEASURED WITHIN "F"
2. LEADS FORMED TO FIT INTO HOLE 0.94mm (0.037) MIN

DIM	MILLIMETERS		INCHES	
	MIN	MAX	MIN	MAX
A	6.10	6.73	0.240	0.265
B	2.29	2.79	0.090	0.110
D	0.51	0.94	0.020	0.037
F	3.56	6.35	0.140	0.250
G	3.68	3.94	0.145	0.155
H	1.02	1.27	0.040	0.050
K	6.60	10.16	0.260	0.400
L	19.30	27.05	0.760	1.065

CASE 109–03

M1115

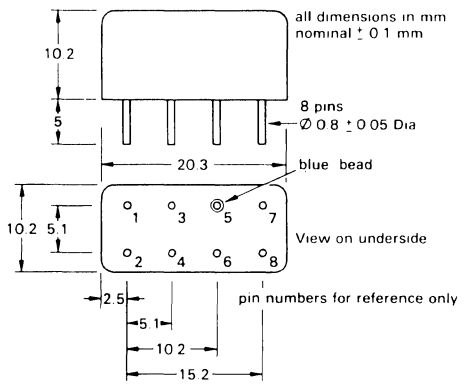

M1116

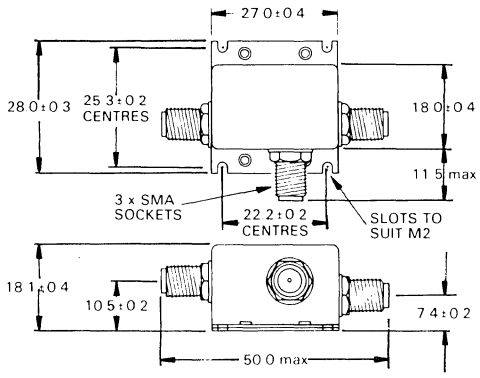

M1117

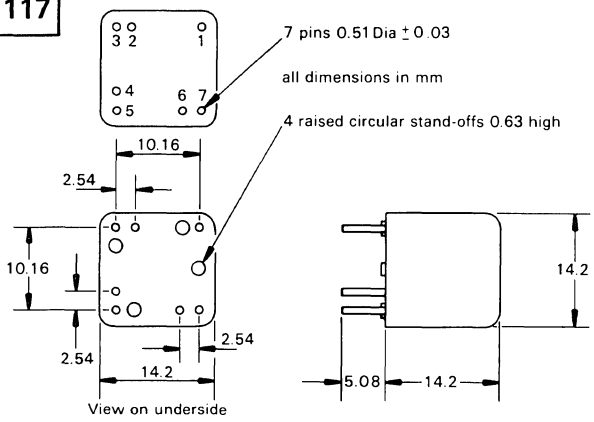

M1118

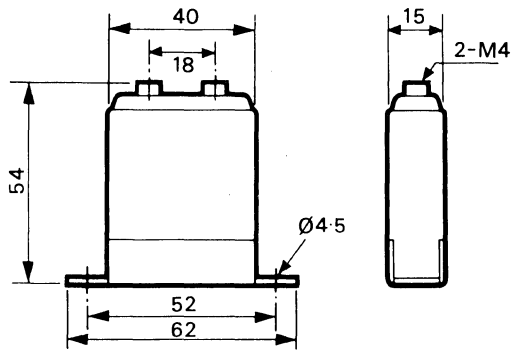

M1119

Suffix	A	L
M1119	25.4	35.1
M1119a	25.4	38.1
M1119b	25.4	41.1
M1119c	25.4	44.2
M1119d	25.4	47.2
M1119e	50.8	40.9
M1119f	50.8	44.7
M1119g	50.8	48.5
M1119h	50.8	52.3
M1119i	50.8	56.1

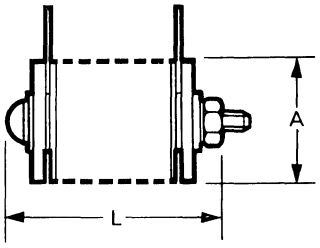

15. OUTLINE DRAWINGS

M1120

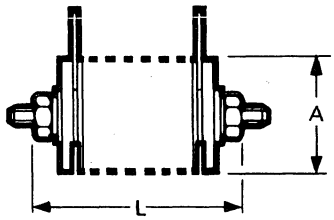

	A	L		A	L
M1120	25.4	50.3	M1120p	50.8	63.8
M1120a	25.4	53.0	M1120q	50.8	67.6
M1120b	25.4	56.4	M1120r	50.8	71.4
M1120c	25.4	59.4	M1120s	50.8	75.2
M1120d	25.4	62.5	M1120t	50.8	79.0
M1120e	25.4	65.5	M1120u	50.8	82.8
M1120f	25.4	68.8	M1120v	50.8	86.6
M1120g	25.4	71.6	M1120w	50.8	90.4
M1120h	25.4	74.7	M1120x	50.8	94.2
M1120i	25.4	77.7	M1120y	50.8	98.0
M1120j	25.4	80.8	M1120z	50.8	101.9
M1120k	25.4	83.8	M1120aa	50.8	105.7
M1120l	25.4	86.9	M1120ab	50.8	109.5
M1120m	25.4	89.9	M1120ac	50.8	113.3
M1120n	25.4	93.0			
M1120o	50.8	59.9			

M1122

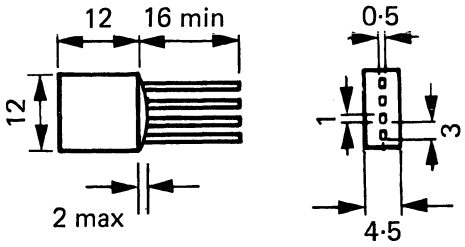

All dimensions in mm.

M1123

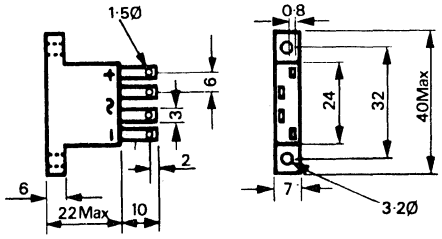

All dimensions in mm.

M1124

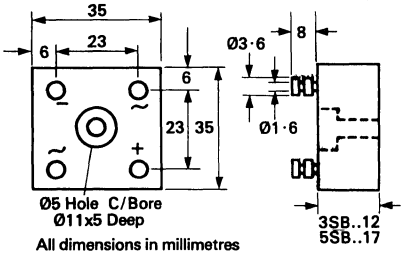

All dimensions in millimetres

M1125

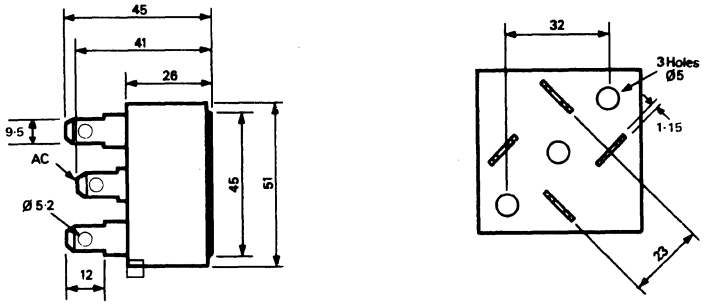

All dimensions in millimetres

M1126

All dimensions in mm.

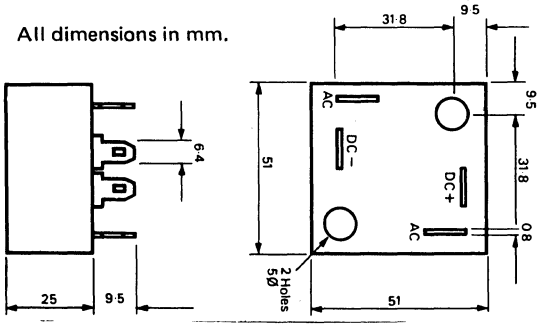

M1127

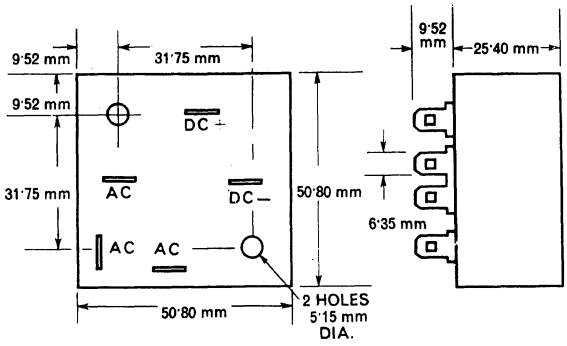

All dimensions in mm. (Nominal)

15. OUTLINE DRAWINGS

M1128

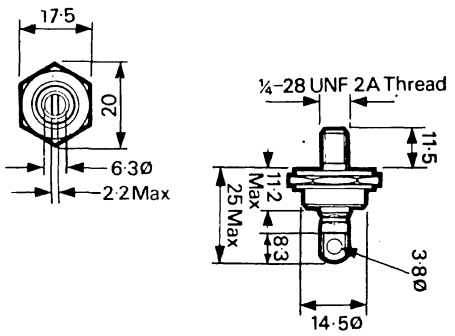

M1129

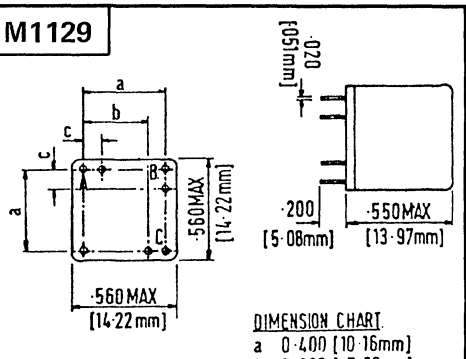

DIMENSION CHART

a	0·400	[10·16mm]
b	0·300	[7·62mm]
c	0·200	[5·08mm]
d	0·100	[2·54mm]

M1130

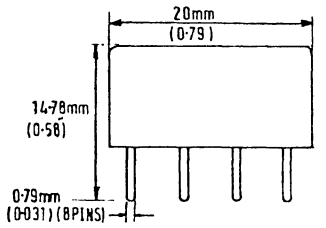

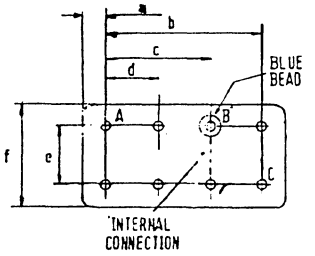

DIMENSION CHART

a — 2·21mm (0·087)
b — 15·24mm (0·600)
c — 10·16mm (0·400)
d — 5·08 mm (0·200)
e — 5·08 mm (0·200)
f — 10 mm (0·393)

M1131

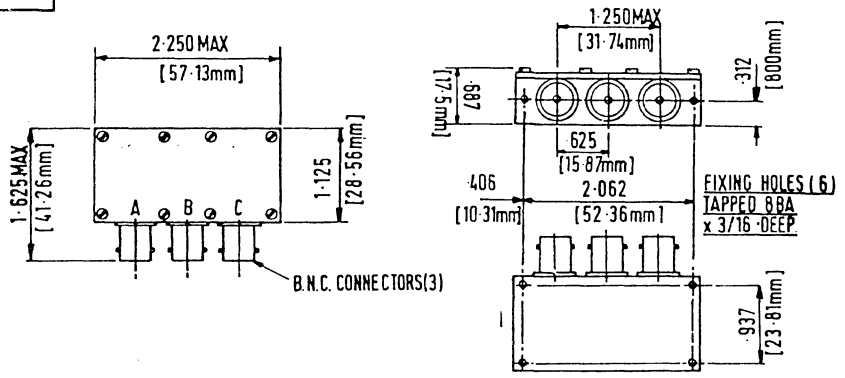

M1132

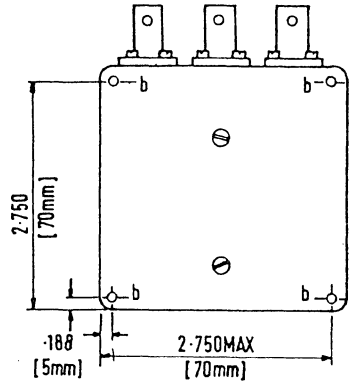

FIXING HOLES
2– a = 6BA TAPPED THROUGH
4– b = TAPPED 7/16 (8mm) DEEP.

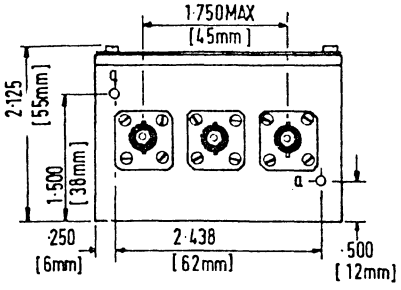

M1133

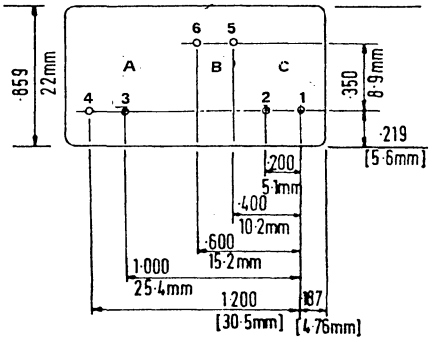

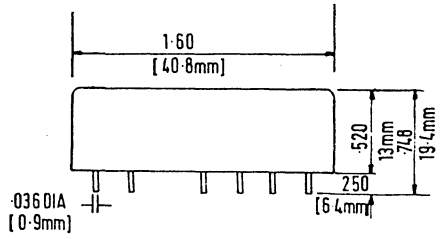

M1134

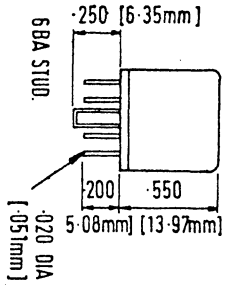

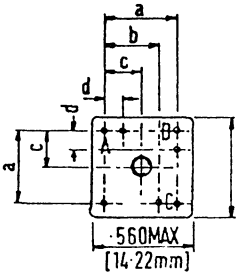

DIMENSION CHART

a – 0·400 [10·16mm]
b – 0·300 [7·62mm]
c – 0·200 [5·08mm]
d – 0·100 [2·54mm]

15. OUTLINE DRAWINGS

M1135

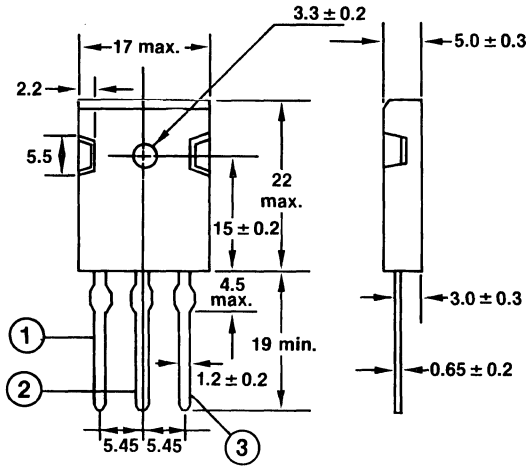

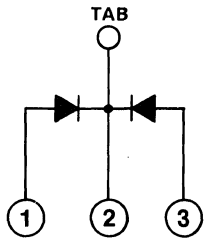

M1136

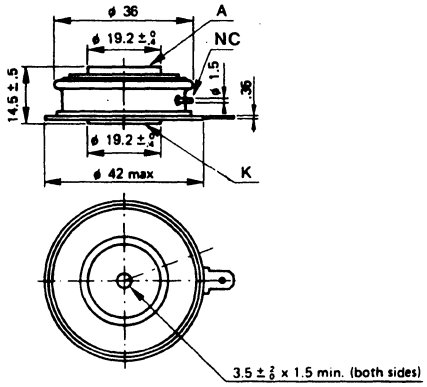

M1138

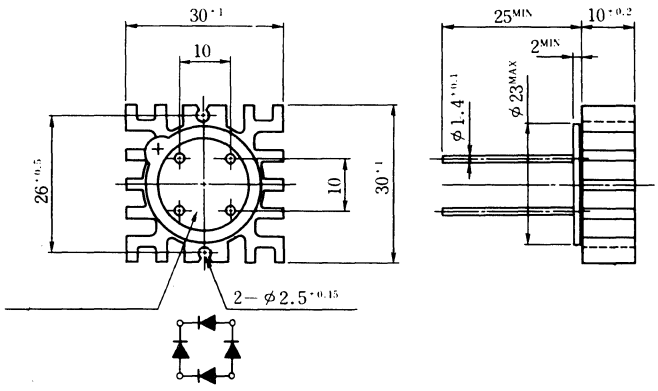

M1140

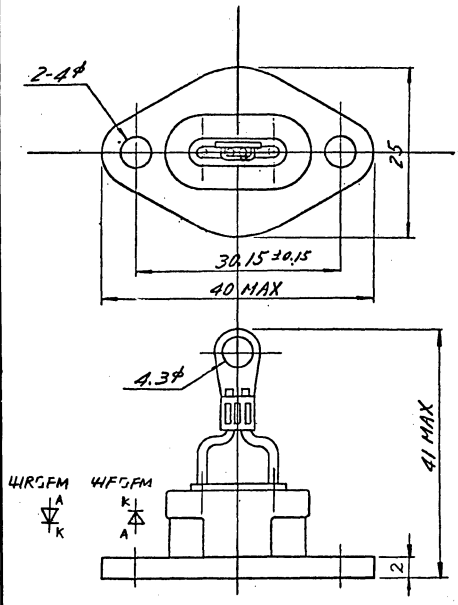

Dimensions in mm

M1141

Dimensions in mm

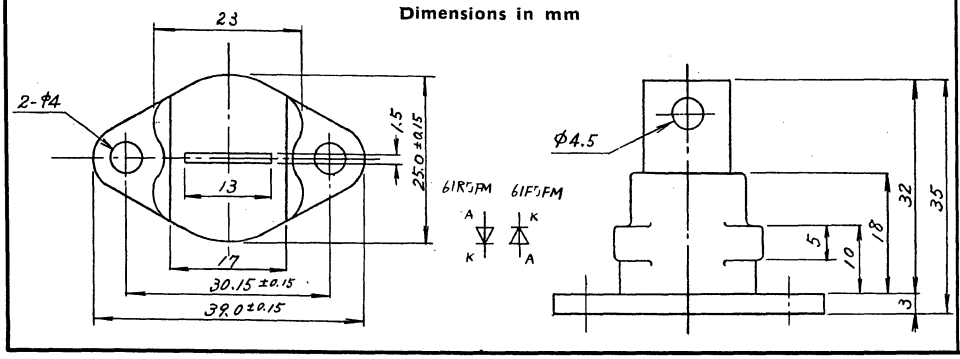

15. OUTLINE DRAWINGS

M1143

PACKAGE DIMENSIONS . in millimeters (inches)

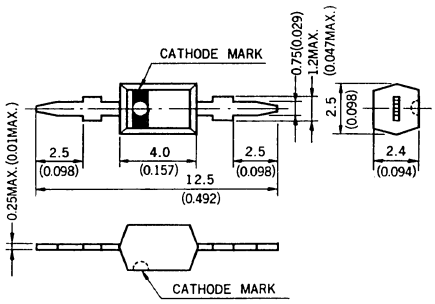

M1144

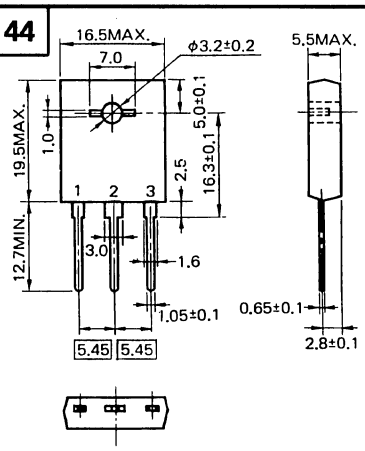

M1146

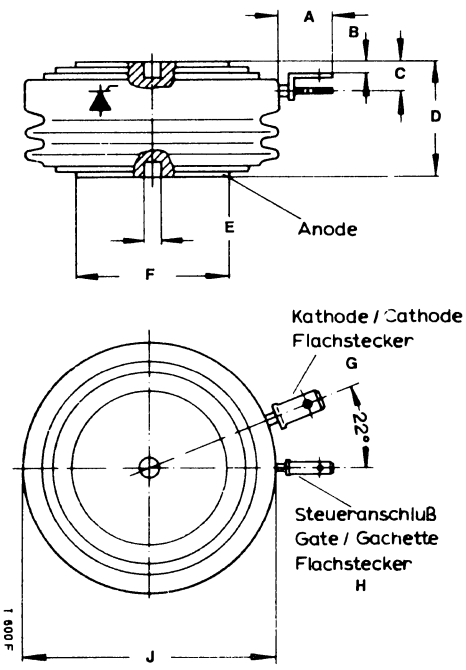

	A	B	C	D	E	F	G	H	J
M1146	≤12	3	7	26	3.5x3.5	34	A4.8x0.8	A2.8x0.8	56
M1146a	≤12	3	7	26	3.5x3.5	50			74

M1147

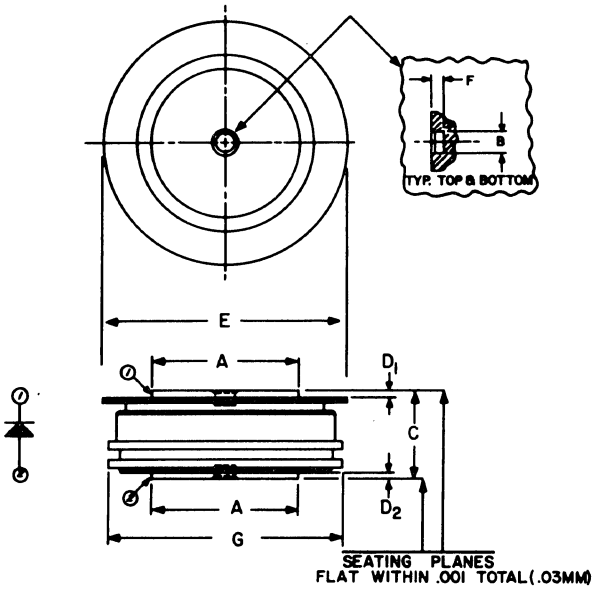

SYM.	INCHES MIN.	INCHES MAX.	METRIC MM MIN.	METRIC MM MAX.
A	.985	.995	25.01	25.27
B	.135	.145	3.42	3.68
C	.560	.605	14.22	15.37
D_1	.040	—	1.01	—
D_2	.030	—	.76	—
E	1.600	1.650	40.64	41.91
F	.070	.085	1.77	2.16
G	—	1.585	—	40.26

M1148

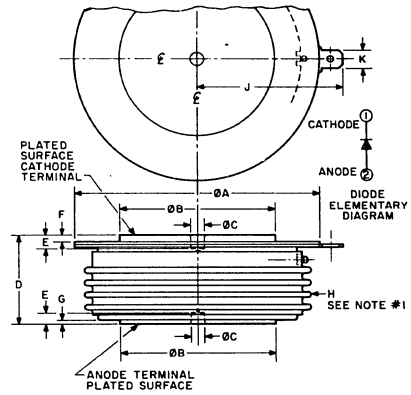

SYM.	INCHES MIN.	INCHES MAX.	MILLIMETERS MIN.	MILLIMETERS MAX.	NOTES
ϕA	–	2.960	–	75.18	
ϕB	1.800	1.900	45.78	49.26	
ϕC	0.136	0.146	3.45	3.71	
D	1.000	1.070	25.10	27.18	
E	.070	.100	1.78	2.54	
F	.030	–	0.76	–	
G	.003	.067	0.13	1.70	
H	–	–	–	–	1
J	1.630	1.710	42.67	43.43	
K	.186	.189	4.72	4.80	

NOTE:
1. Glazed ceramic insulator with 1.00-inch (25.40mm) surface creepage, minimum.

M1149

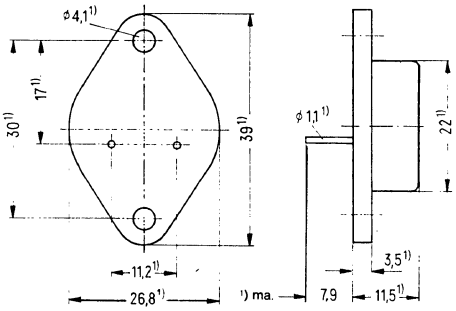

M1150

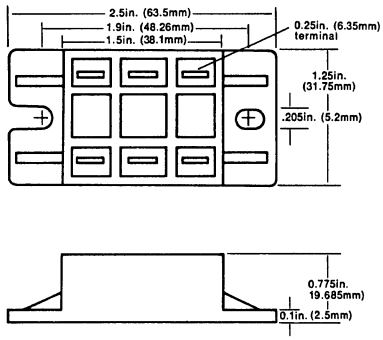

15. OUTLINE DRAWINGS

M1151

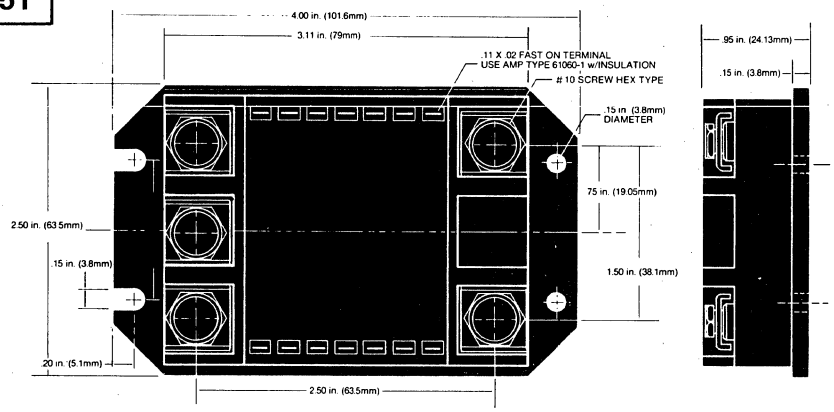

M1152

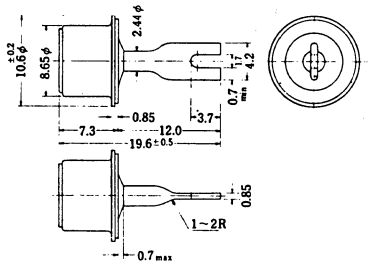

M1153

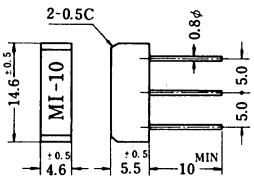

Type	Connection
MI-101 MI-102 MI-104 MI-106	
MI-101R MI-102R MI-104R MI-106R	

M1155

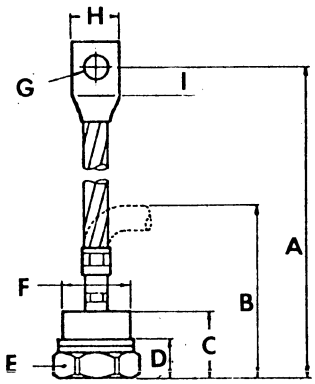

Suffix	A	B	C	D	E	F	G	H	I
M1155	7.87	2.75	1.100	.62	1.24	1.11	.41	.84	.43
M1155a	7.87	3.15	1.53	.55	1.24	1.08	.41	.84	.43

M1158

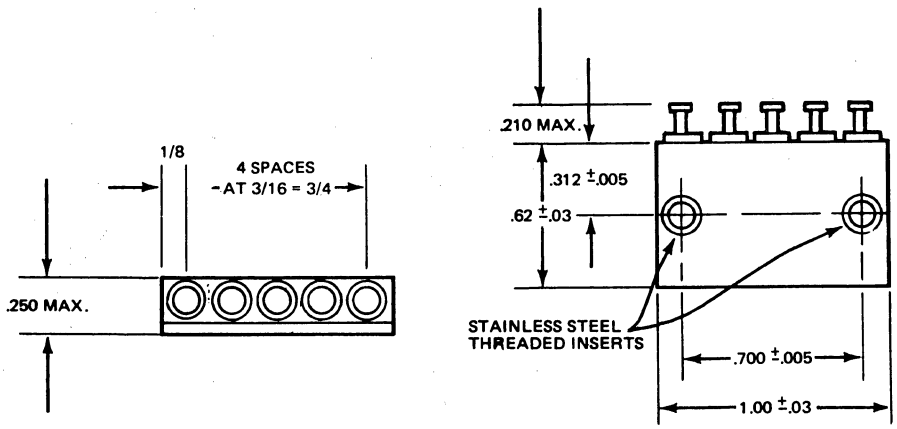

M1159

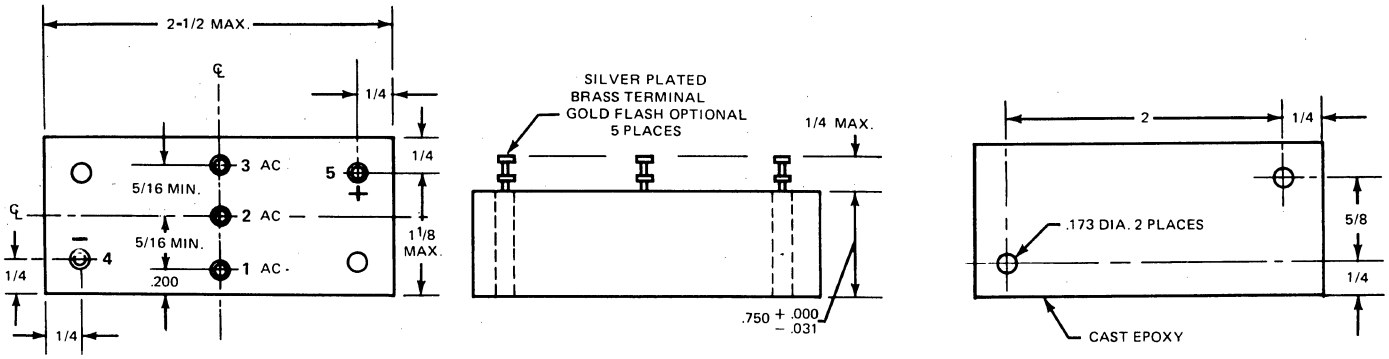

15. OUTLINE DRAWINGS

M1161

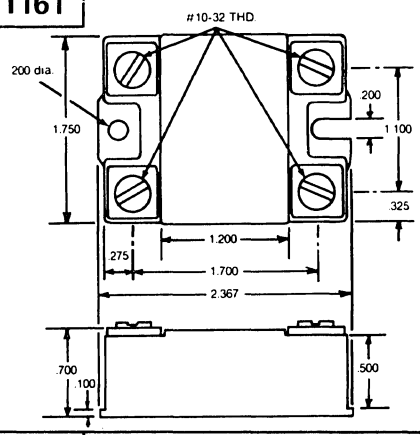

M1162

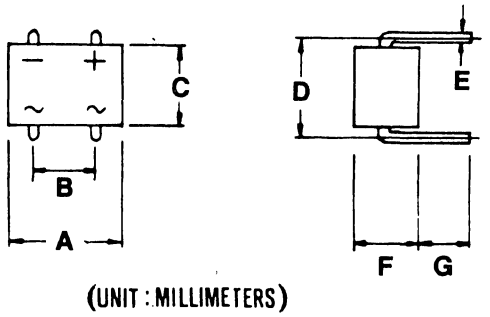

(UNIT : MILLIMETERS)

	A	B	C	D	E	F	G
M1162	9.2	5.1	6.6	8.2	.8	5.2	3.3
M1162a	9	5	6.5	7.5	.25	4.5	3.6

M1163

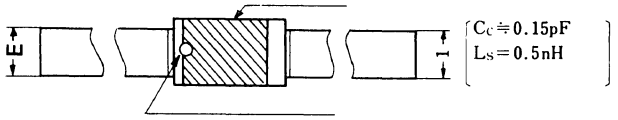

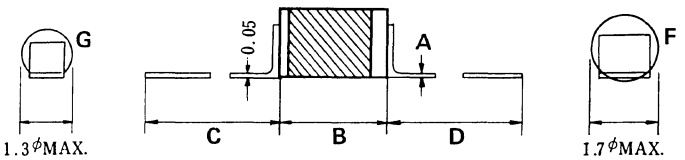

Suffix	A	B	C	D	E	F	G
M1163	0.05	2.5	6.0	10.0	1.0	1.7	1.3
M1163a	0.04	1.3	6.0	10.0	0.5	1.3	

M1164

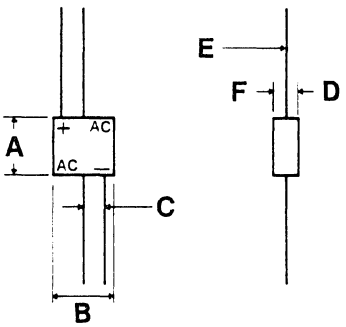

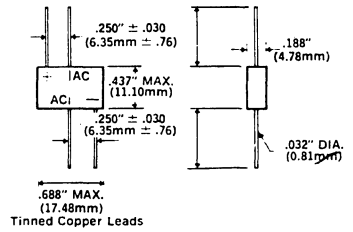

Suffix	A	B	C	D	E	F
M1164	.32 max	.32 max	.125	.15	.28	1.25 min
M1164a	.437 max	.688 max	.250	.188	.32	.562
M1164b	.50	.50	.150	.250	.032	1.0

M1165

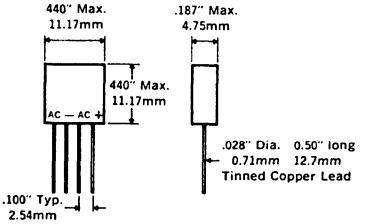

M1166

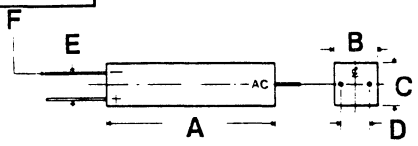

Suffix	A	B	C	D	E	F
M1166	.562	.437 max	.437 max	.300	.300	.032
M1166a	.688	.437 max	.437 max	3.00	.300	.032
M1166b	.875	.437 max	.437 max	.300	.300	.032
M1166c	1.125	.437 max	.437 max	.300	.300	.022
M1166d	1.25	.437 max	.437 max	.300	.300	.032
M1166e	1.375	.437 max	.437 max	.300	.300	.032
M1166f	1.625	.437 max	.437 max	.300	.300	.032
M1166g	.875	.375	.375	.300	.300	.032

M1171

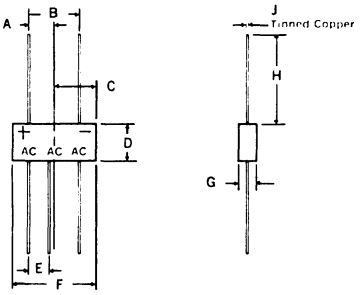

	ins.	mm.
A	.310	7.87
B	.621	15.77
C	.512 REF.	13.0 REF.
D	.460 MAX.	11.68 MAX.
E	.255	6.48
F	1.030 MAX.	26.16 MAX.
G	.220 MAX.	5.59 MAX.
H	.875	22.23
J	.028 DIA.	0.71 DIA.

15. OUTLINE DRAWINGS

M1176

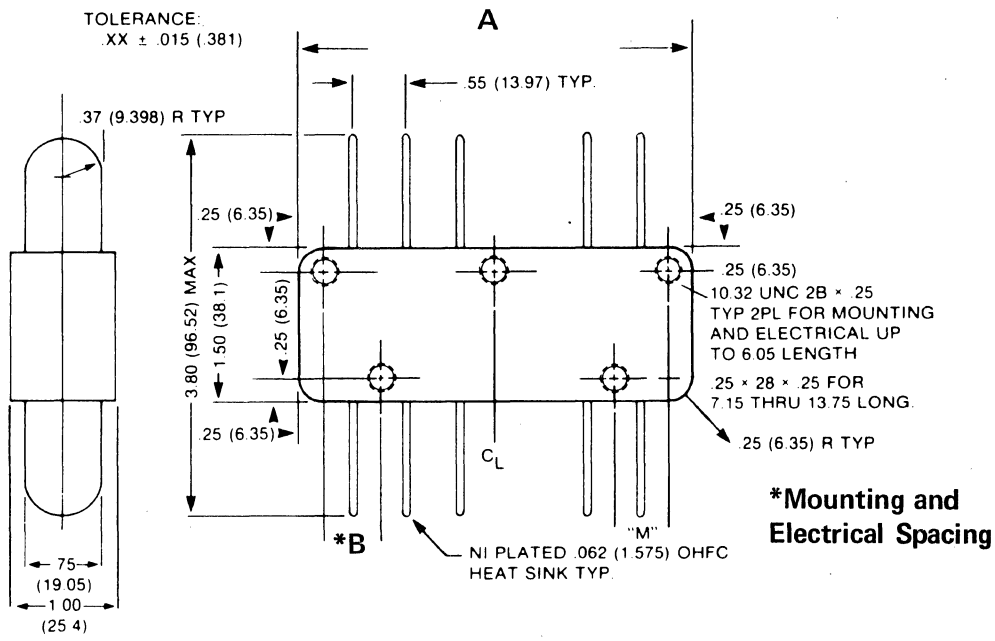

***Mounting and Electrical Spacing**

Suffix	A	B
M1176a	2.75	.58
M1176b	4.95	1.13
M1176c	7.15	1.68
M1176d	9.35	2.23
M1176e	13.75	3.33
M1176f	3.85	.58
M1176g	10.45	1.68

M1177

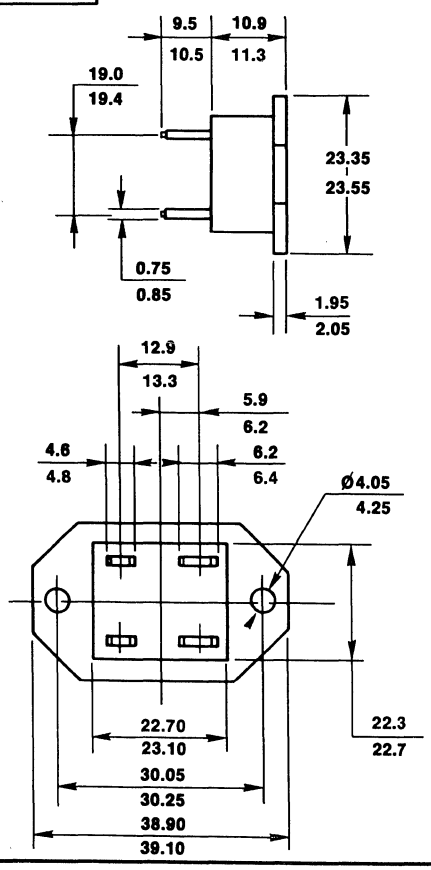

M1180

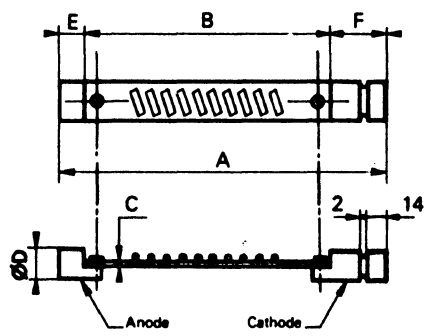

Suffix	A	B	C	D	E	F
M1180	142	117	3.18	20	5.0	20
M1180a	170	145	3.18	20	5.0	20
M1180b	230	205	3.18	20	5.0	20

15. OUTLINE DRAWINGS

M1181

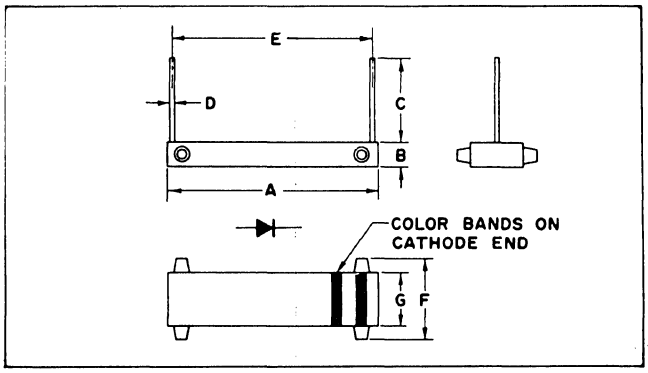

LTR.	INCHES	MILLIMETERS
A	1.75	44,45
B	.20	5,08
C	.68 Min.	17,27
D	.040 Dia.	1,02
E	1.67	42,42
F	.67	17,02
G	.44	11,12

M1182

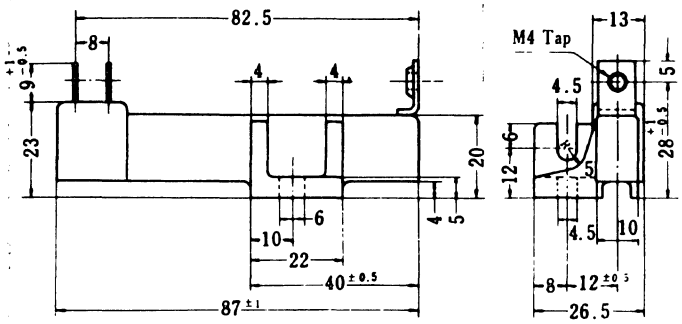

M1183

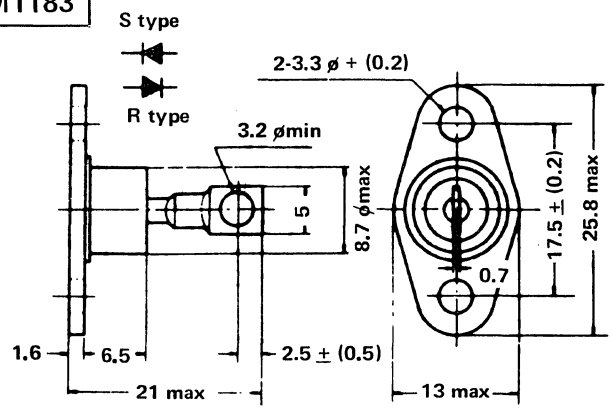

M1184

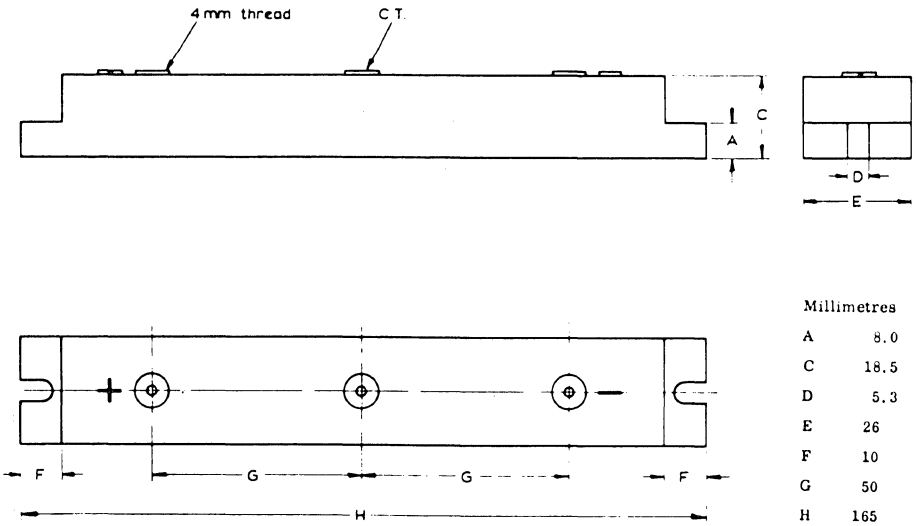

Millimetres	
A	8.0
C	18.5
D	5.3
E	26
F	10
G	50
H	165

M1185

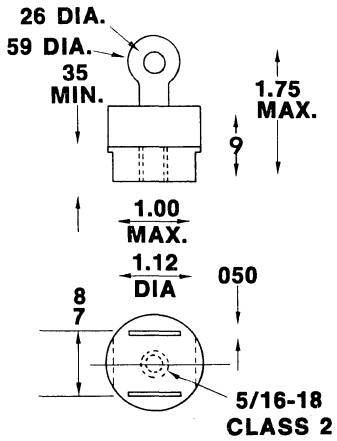

15. OUTLINE DRAWINGS

M1186

Dimensions in mm

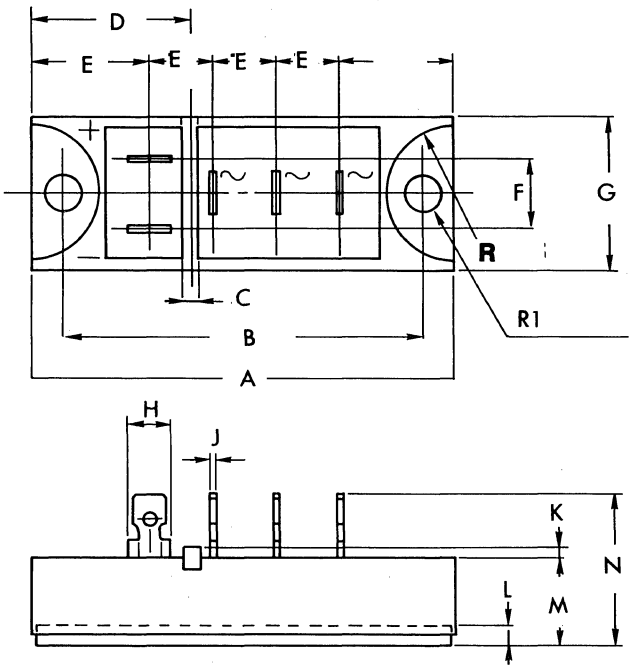

	A	B	C	D	E	E1	E2	E3	E4	F	G	H	J	K	L	M	N	R	R1
M1186	80.0	67.7 68.3	3.00	30.0	22.0	12.0	12.0	12.0	22.0	13.0	29.0	8.00	0.80	2.00	4.00	18.5	31.0	12.5	3.25
M1186a	57.90	47.62	2.54	17.44		7.92	7.92	7.92	8.90		19.17			N/A	N/A	3.17 6.35	20.32	N/A	2.14

M1187

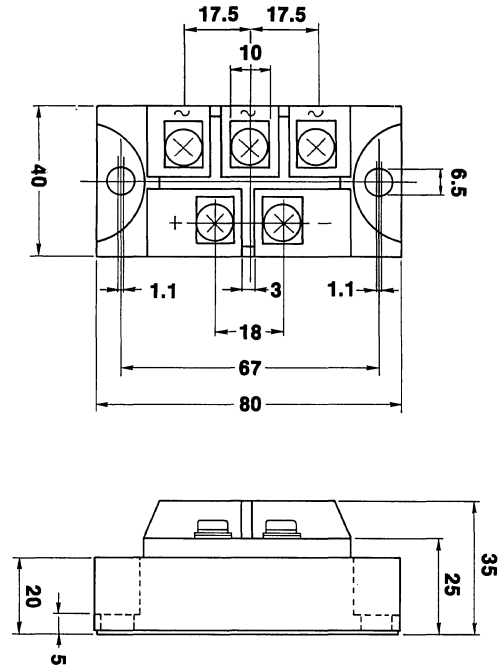

M1188

Dimensions in mm

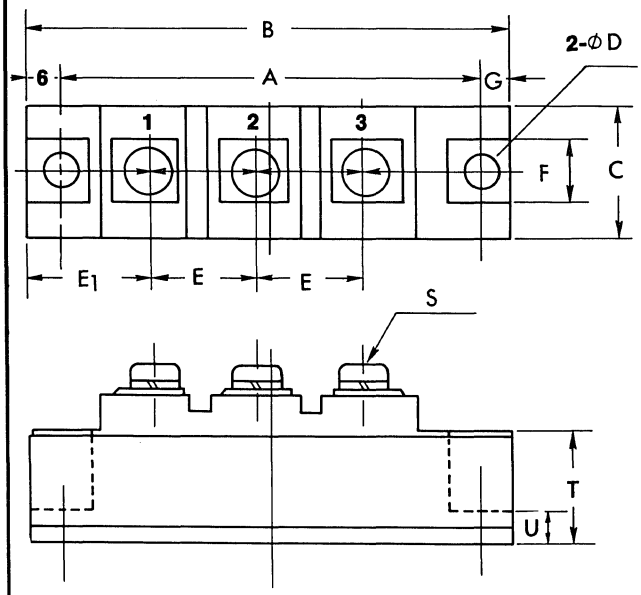

	A	B	C	D	E1	E2	E3	F	G	S	T	U	NOTES
M1188	80.0	92.0	25.0	6.50	23.5	20.0	20.0	12.50	6.00	M5x10	21.0	6.50	
M1188a	80.0	92.0	20.0	6.20	21.0	20.0	20.0		6.00	M5x0.8	30.0	6.00	
M1188b	80.0	92.0	20.0	6.20			20.0		6.00	M5x0.8	30.0	6.00	Terminal 1 Omitted

M1189

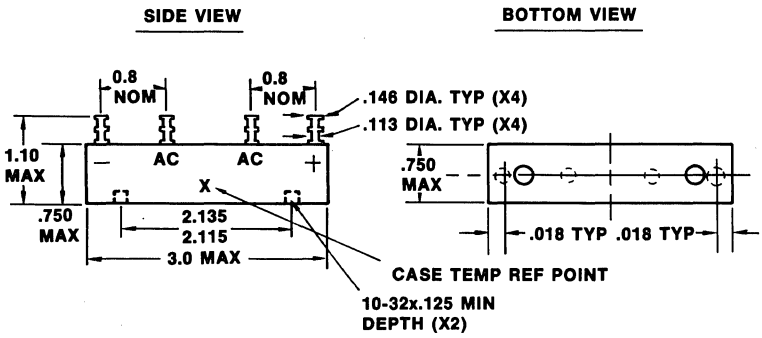

15. OUTLINE DRAWINGS

M1190

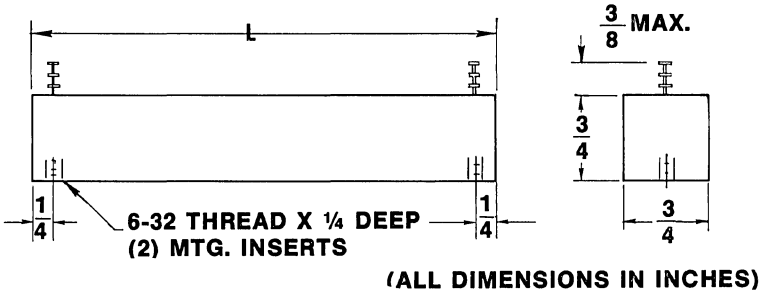

Suffix	L
M1190	2.5
M1190a	3.0
M1190b	3.5
M1190C	5.0
M1190d	5.5
M1190e	6.0
M1190f	6.5
M1190g	7.0

M1191

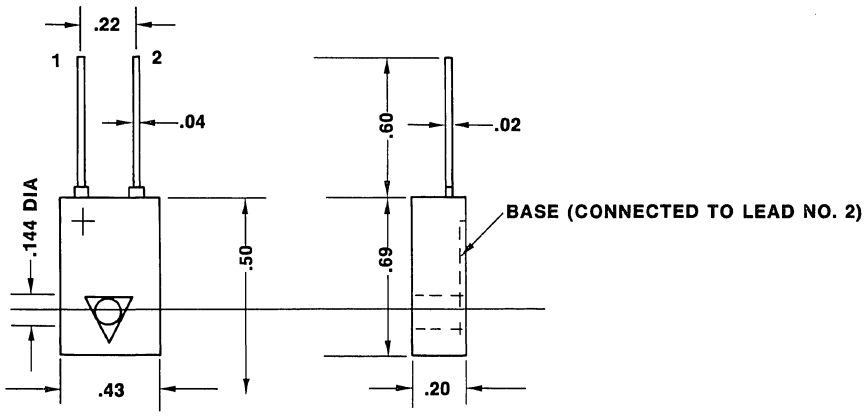

M1192

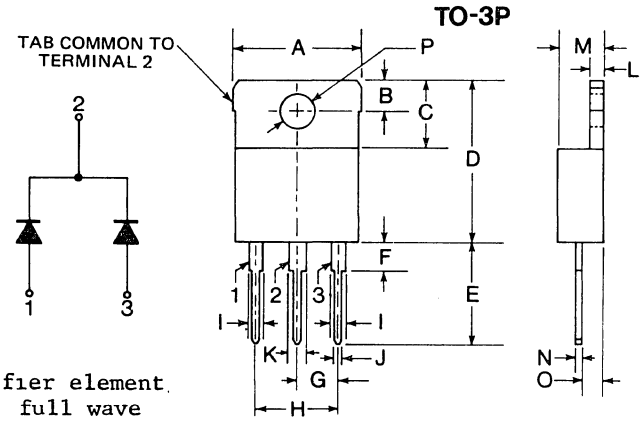

* For each rectifier element
** Output current full wave

DIM	INCHES		MILLIMETERS	
	MIN	MAX	MIN	MAX
A	0.575	0.610	14.61	15.49
B	0.145	0.165	3.68	4.19
C	0.320	0.350	8.13	8.89
D	0.750	0.790	19.05	20.07
E	0.550	0.590	13.97	14.99
F	0.100	0.140	2.54	3.56
G	0.205	0.225	5.21	5.72
H	0.420	0.440	10.67	11.18
I	0.059	0.067	1.50	1.70
J	0.040	0.050	1.02	1.27
K	0.070	0.090	1.78	2.29
L	0.050	0.060	1.27	1.52
M	0.212	0.230	5.38	5.84
N	0.020	0.030	0.51	0.76
O	0.080	0.120	2.03	3.05
P	0.150 D	0.165 D	3.81 D	4.19 D

M1196

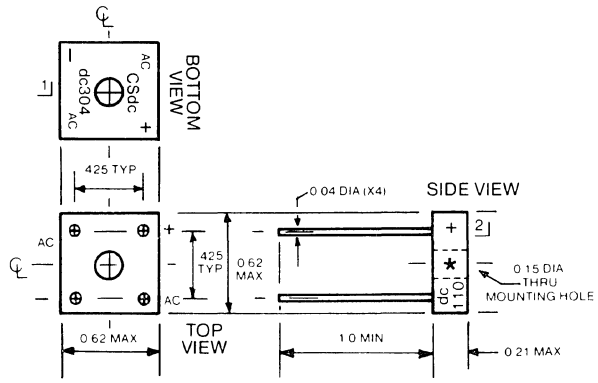

15. OUTLINE DRAWINGS

M1193

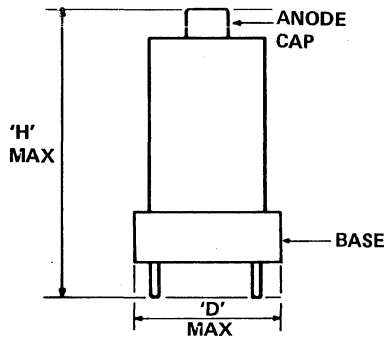

Suffix	A	B
M1193	4.8	1.6
M1193a	6.3	2.1
M1193b	5.4	1.6
M1193c	10.2	1.9
M1193d	8.8	1.9
M1193e	11	1.9
M1193f	7.8	1.9
M1193g	11.5	2.2
M1193h	6.3	1.6
M1193i	8.5	1.9
M1193j	8.5	2.2
M1193k	8.0	1.6

M1194

Suffix	A	B
M1194	1.7	1.5
M1194a	2.7	.75

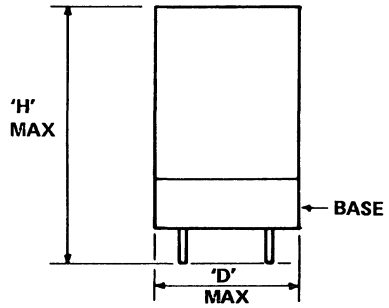

M1195

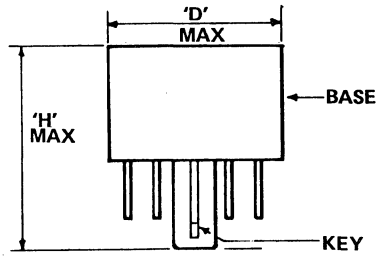

Suffix	A	B
M1195	1.8	1.4
M1195a	1.5	1.3

M1197

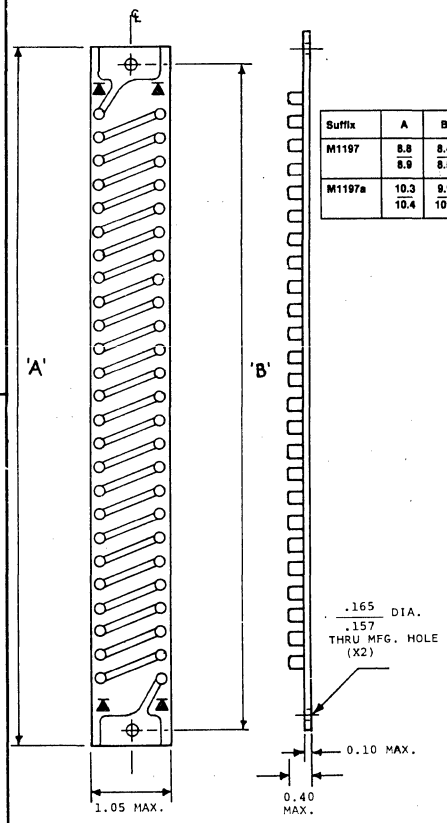

Suffix	A	B
M1197	8.8 / 8.9	8.4 / 8.5
M1197a	10.3 / 10.4	9.9 / 10.0

M1198

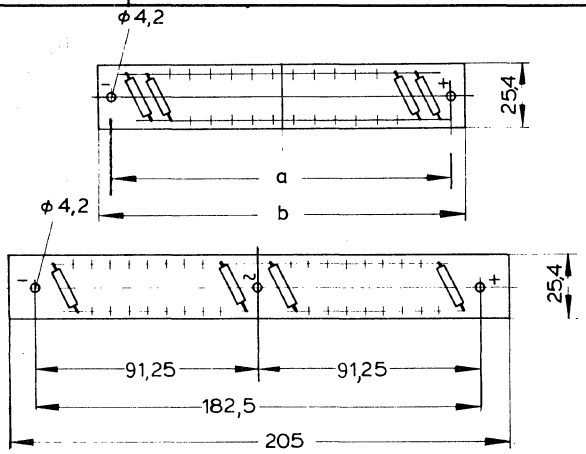

Suffix	A	B
M1198	98	106
M1198a	142.3	150

M1201

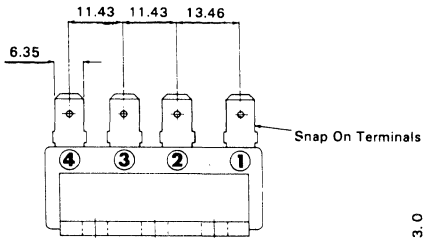

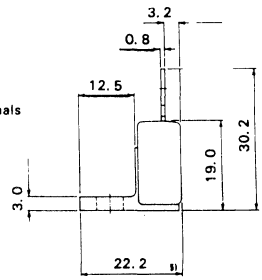

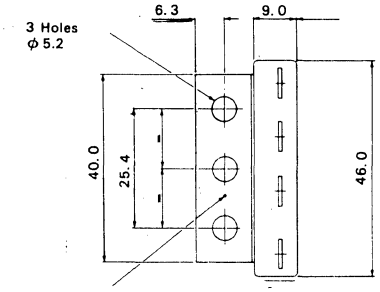

15. OUTLINE DRAWINGS

M1202

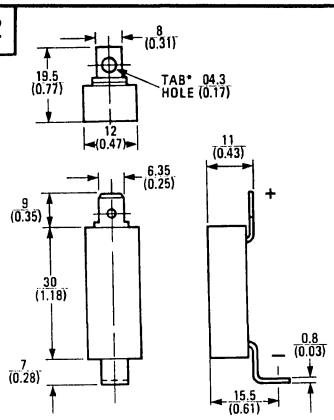

Case Style D-40

M1203

Suffix	A	B	C	D	E	F
M1203	18	116	106	4.5	3.2	10
M1203a	20	114	135	4.5	3.2	10
M1203b	25.4	153	143	4.5	2.4	10

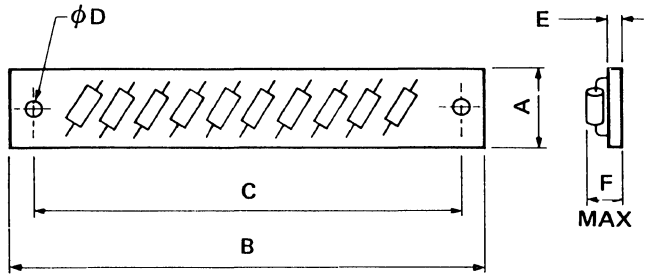

M1204

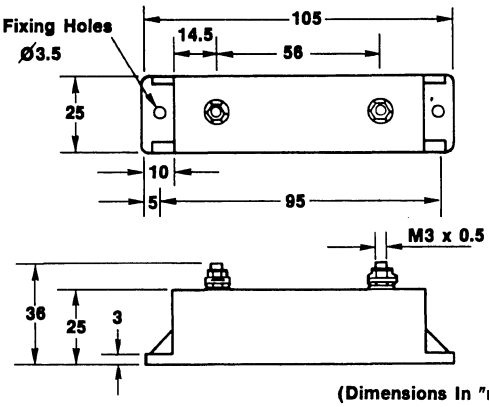

(Dimensions In "mm")

M1205

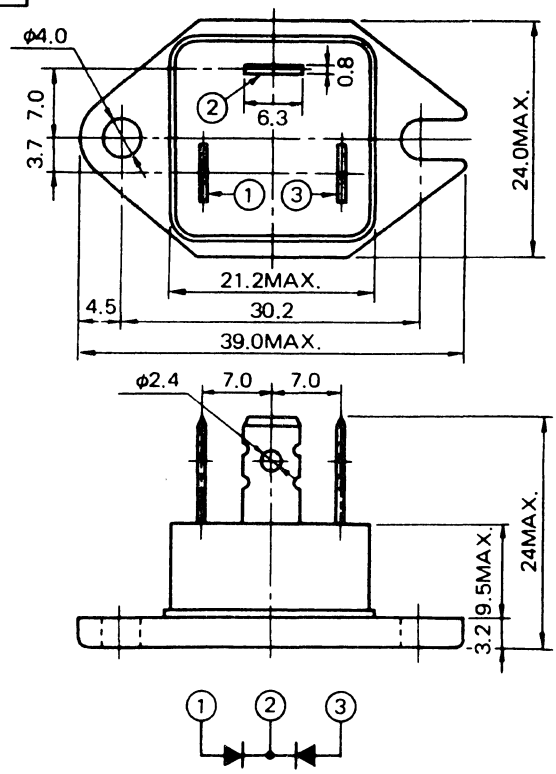

M1206

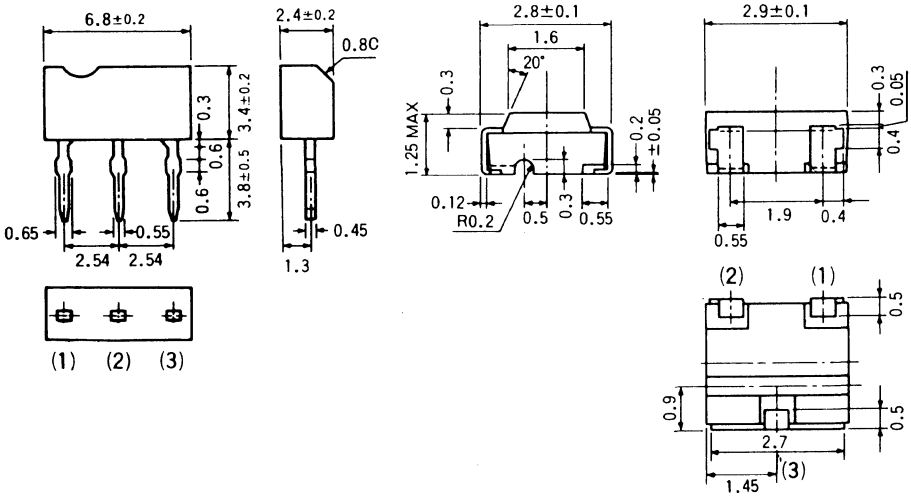

15. OUTLINE DRAWINGS

M1207

Weight = 1400g
Minimum clamping force = 38kN
Maximum clamping force = 47kN

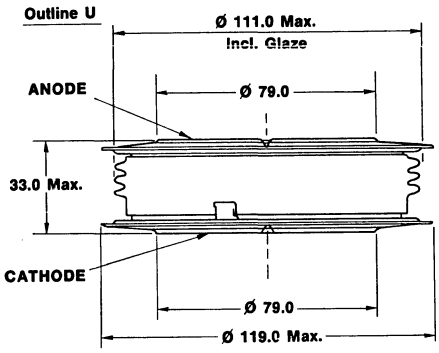

M1208

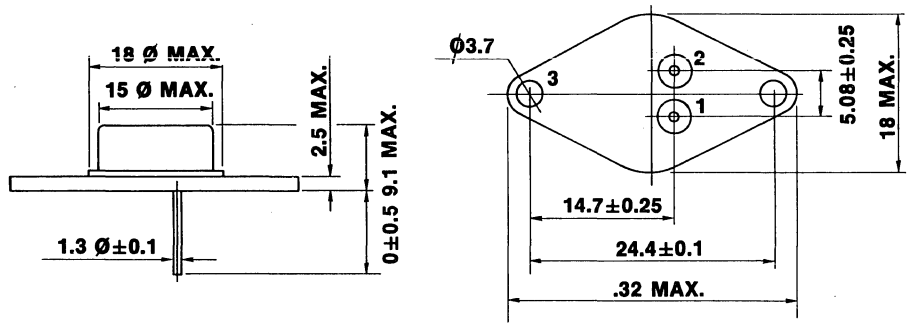

M1209

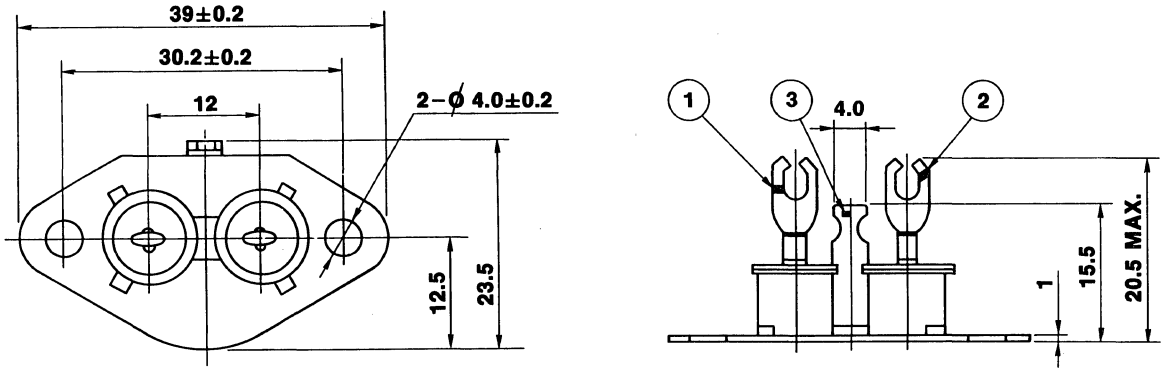

M1210

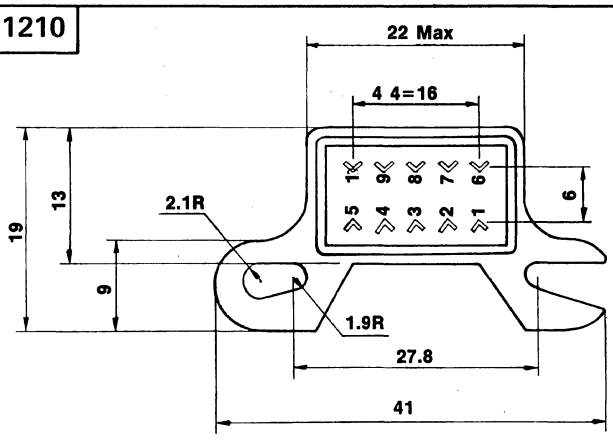

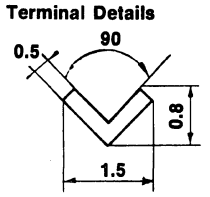

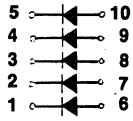

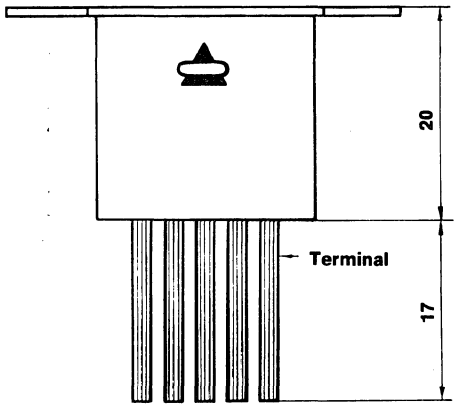

M1211

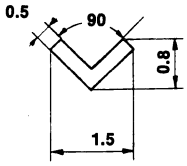

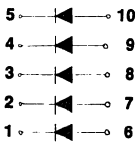

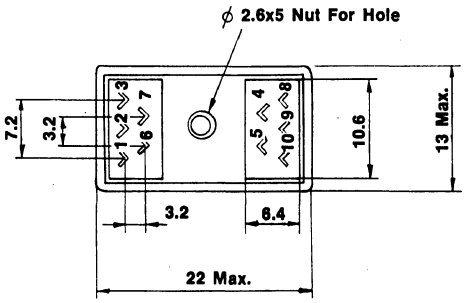

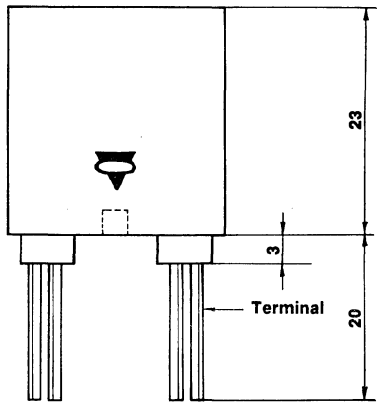

Terminal Details

15. OUTLINE DRAWINGS

M1212

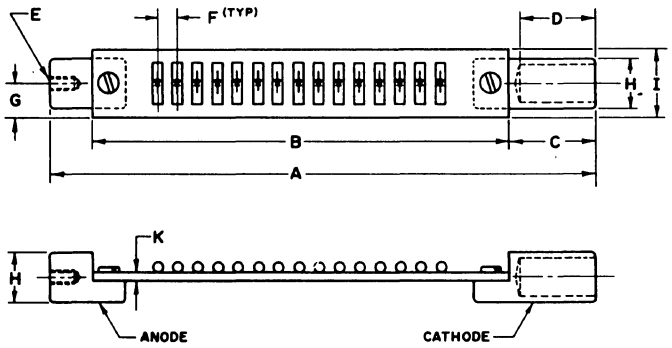

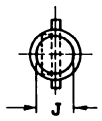

Suffix	A	B	C	D	E	F	G	H	I	J	K
M1212	8.1	6.2	1.3	1.13	10-32X .375	.30	.50	.750	1.0	.578	.125
M1212a	9.2	7.3	1.3	1.13	10-32X .375	.30	.50	.750	1.0	.578	.125
M1212b	10.2	8.3	1.3	1.13	10-32X .375	.30	.50	.750	1.0	.578	.125

M1213

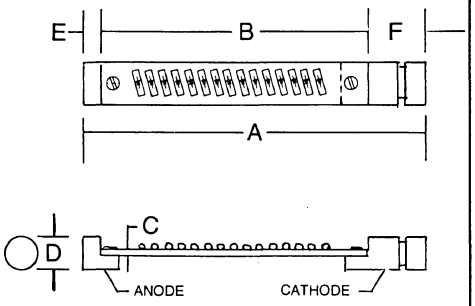

Suffix	A	B	C	D	E	F
M1213	5.6	4.61	.125	.787	.197	.787
M1213a	6.7	5.71	.125	.787	.197	.787
M1213b	9.06	8.07	.125	.787	.197	.787

M1214

DSA (I) 400..K, N :

.K'

DIM. : mm

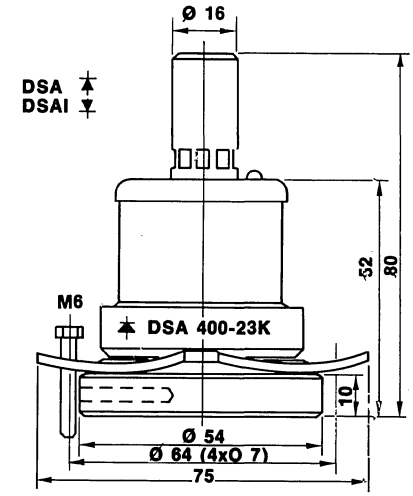

Weight/Poids/Gewicht ca. 0,5 kg.

M1215

DSA (I) 401..G, L :

Dim. : mm

.G

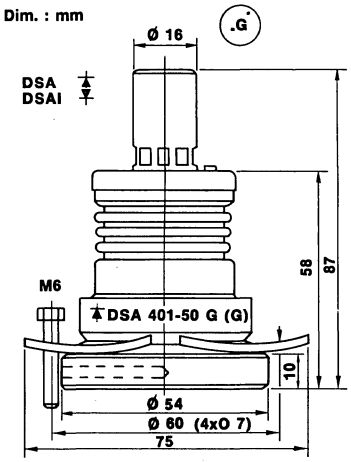

Weight/Poids/Gewicht ca. 0,5 kg.

M1216

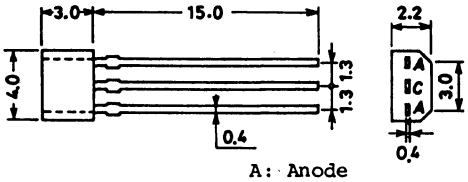

A: Anode
C: Cathode

M1217

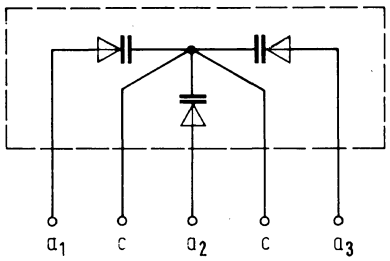

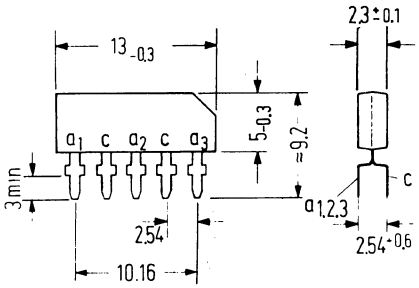

15. OUTLINE DRAWINGS

M1218

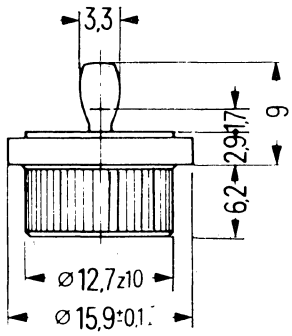

M1219

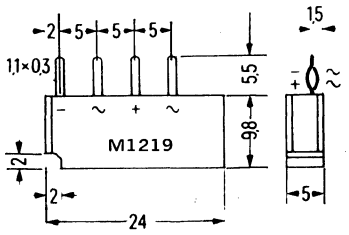

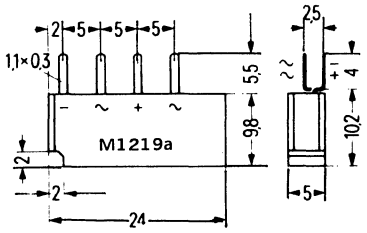

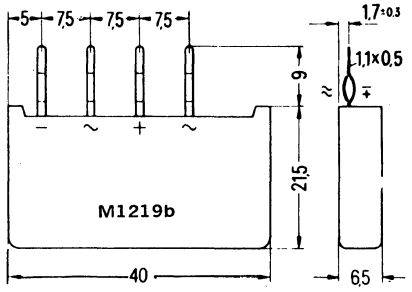

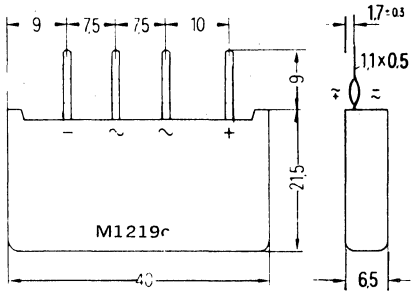

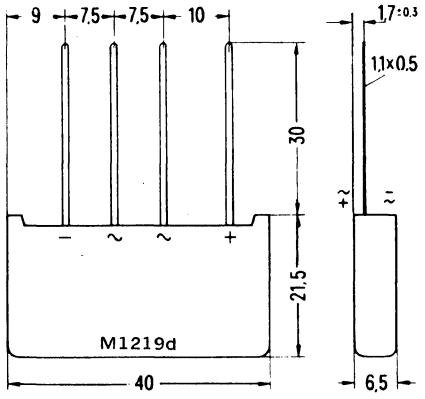

M1220

Dimensions in mm

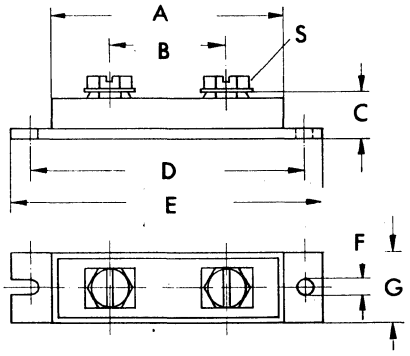

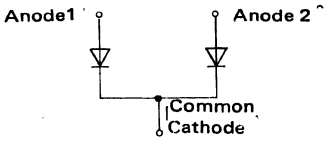

	A	B	C	D	E	F	G	S	NOTES
M1220	66.80 MAX	35.30 MIN	15.90 MAX	80.30 MAX	92.70 MAX	6.90 MAX	20.30 MAX	1/4-20UNF	Cathode Connected to Case
M1220a	60.90 63.50	34.29 35.56	14.98 15.88	79.75 80.27	90.17 92.71	6.35 6.86	17.78 20.32	1/4-20 SLOT-HEX	Cathode Connected to Case

15. OUTLINE DRAWINGS

M1221

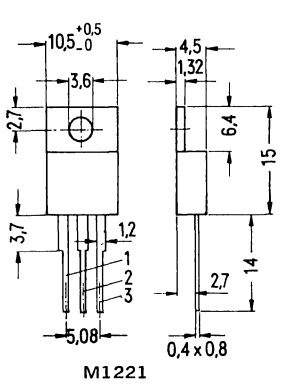

M1221

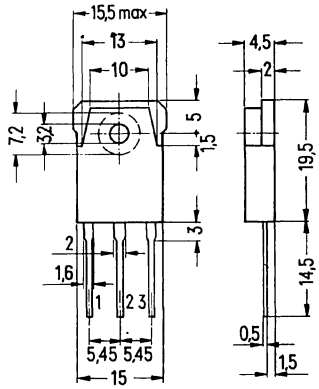

M1221a

M1222

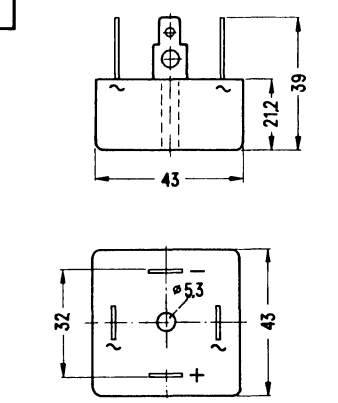

M1222

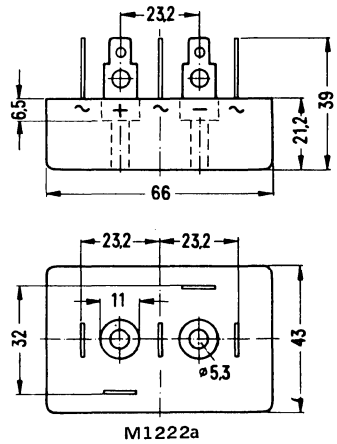

M1222a

M1223

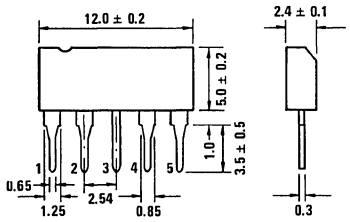

M1224

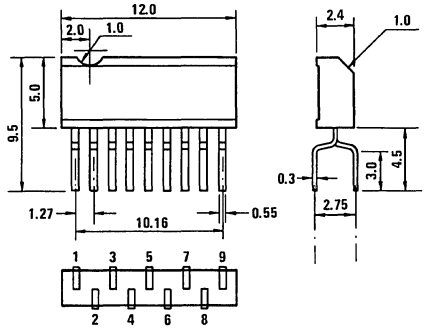

M1225

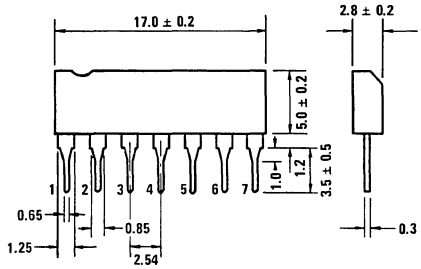

M1226

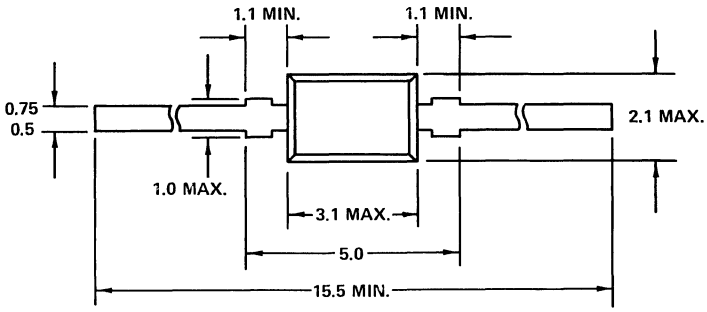

M1227

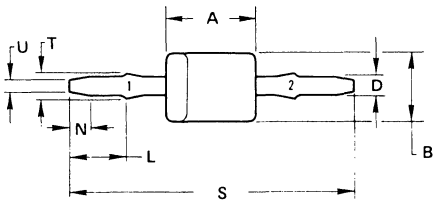

PIN 1. CATHODE
2. ANODE

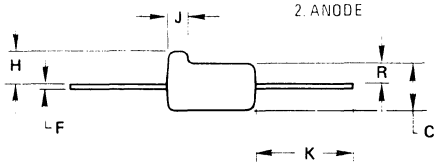

DIM	MILLIMETERS MIN	MILLIMETERS MAX	INCHES MIN	INCHES MAX
A	3.86	4.11	0.152	0.162
B	2.92	3.18	0.115	0.125
C	1.91	2.16	0.075	0.085
D	0.64	0.89	0.025	0.035
F	0.08	0.18	0.003	0.007
H	1.30	1.55	0.051	0.061
J	0.64	0.89	0.025	0.035
K	4.06	4.32	0.160	0.170
L	2.36	2.62	0.093	0.103
N	1.12	1.37	0.044	0.054
R	0.79	1.04	0.031	0.041
S	11.99	12.75	0.472	0.502
T	1.14	1.40	0.045	0.055
U	0.43	0.69	0.017	0.027

15. OUTLINE DRAWINGS

M1228

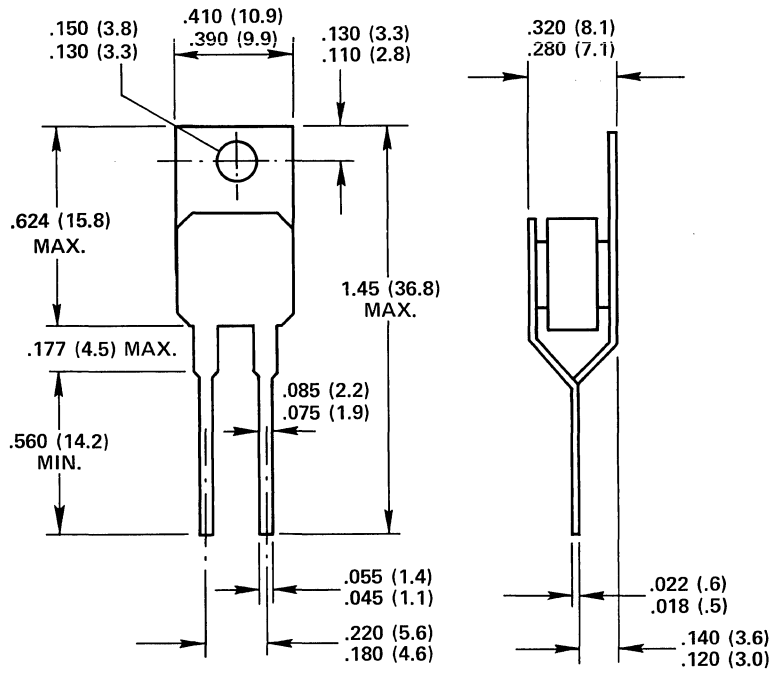

M1239

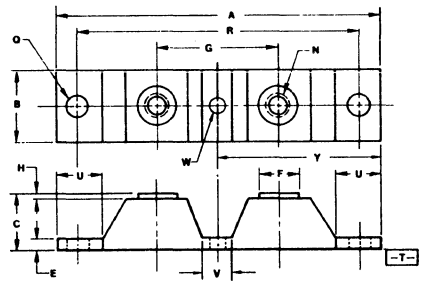

NOTES:
1. DIMENSIONS A AND B ARE DATUMS AND T IS A DATUM SURFACE AND SEATING PLANE.
2. POSITIONAL TOLERANCE FOR N HOLES: ⌖ ⌀ 0.13 (0.005) Ⓜ | T | A Ⓜ | B Ⓜ
3. POSITIONAL TOLERANCE FOR Q AND W HOLES: ⌖ ⌀ 0.25 (0.010) Ⓜ | T | A Ⓜ | B Ⓜ
4. DIMENSIONING AND TOLERANCING PER ANSI Y14.5, 1973.

DIM	MILLIMETERS MIN	MILLIMETERS MAX	INCHES MIN	INCHES MAX
A	–	92.20	–	3.630
B	1.77	2.32	0.700	0.800
C	–	15.87	–	0.625
E	3.05	3.30	0.120	0.130
F	12.45	12.95	0.490	0.510
G	34.92 BSC		1.375 BSC	
H	–	1.27	–	0.050
N	–	–	1/4-20 UNC	
Q	6.86	7.11	0.270	0.280
R	80.01 BSC		3.150 BSC	
U	15.24	–	0.600	–
V	8.38	8.89	0.330	0.350
W	4.32	4.83	0.170	0.190
Y	40.00 BSC		1.575 BSC	

M1229

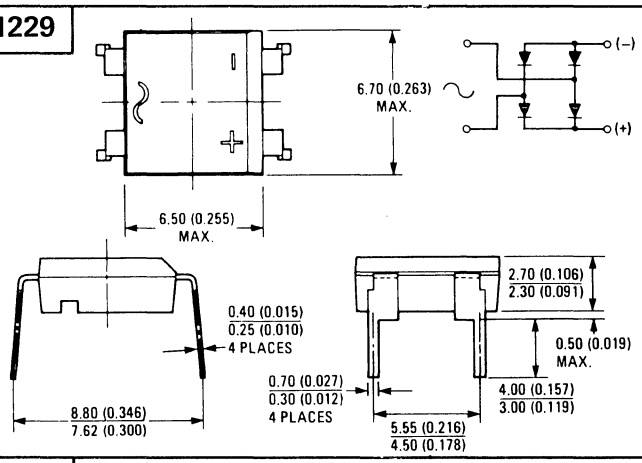

M1230

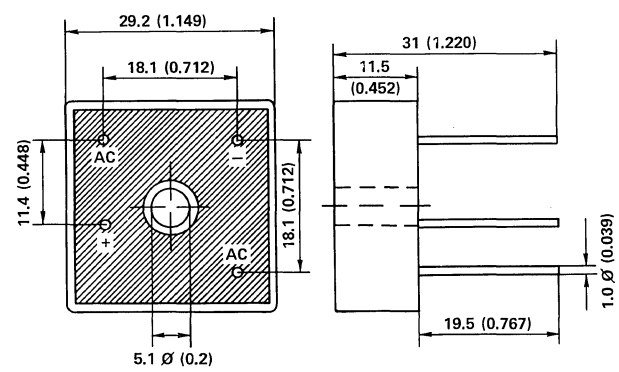

M1231

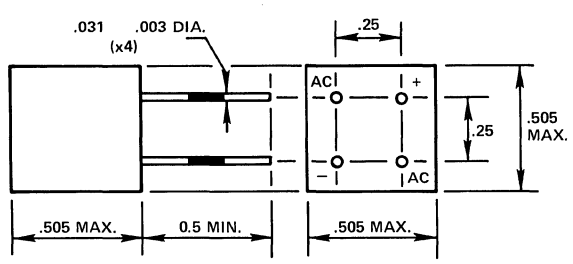

M1232

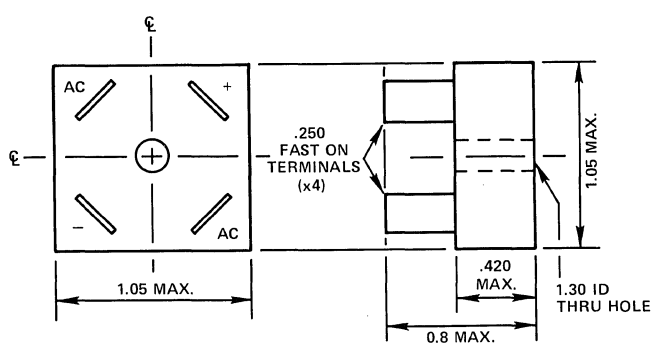

15. OUTLINE DRAWINGS

M1233

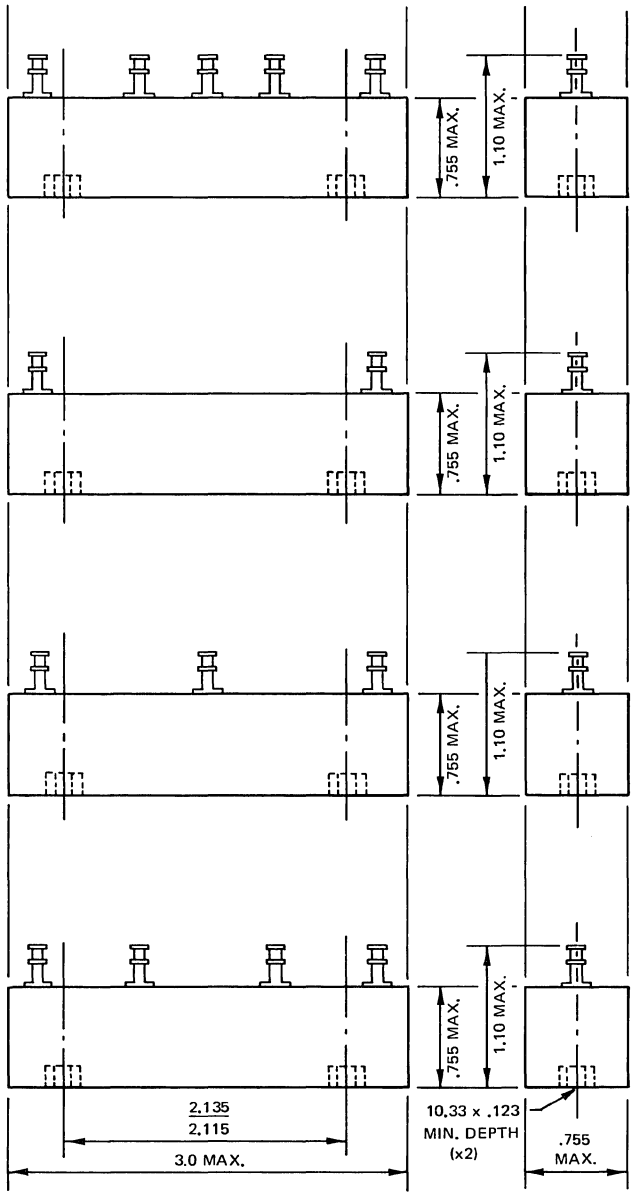

M1234

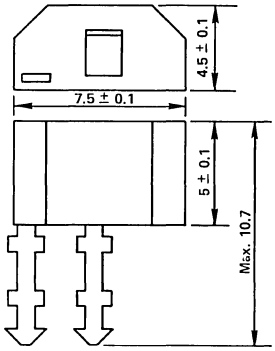

M1235

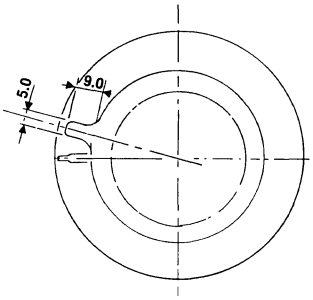

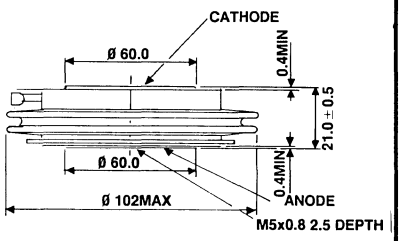

M994

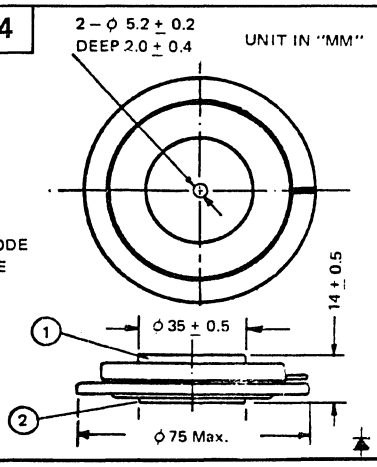

M995

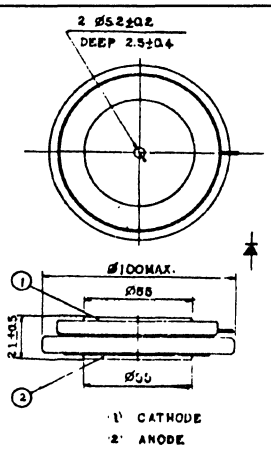

M1008a

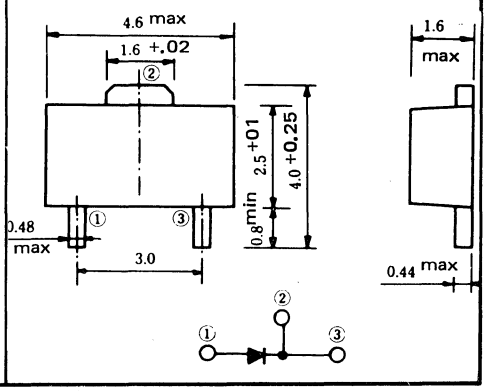

15. OUTLINE DRAWINGS

M1236

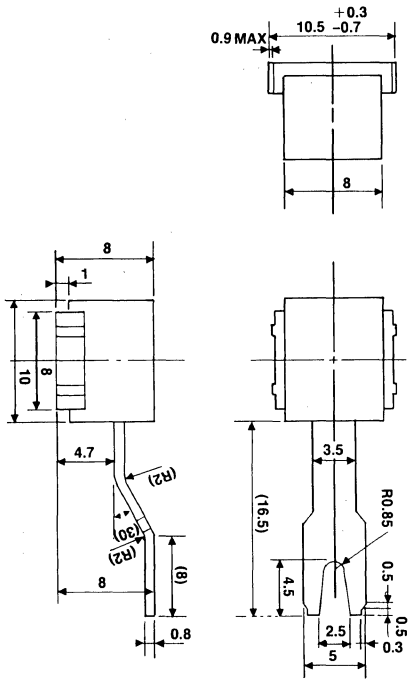

M1237

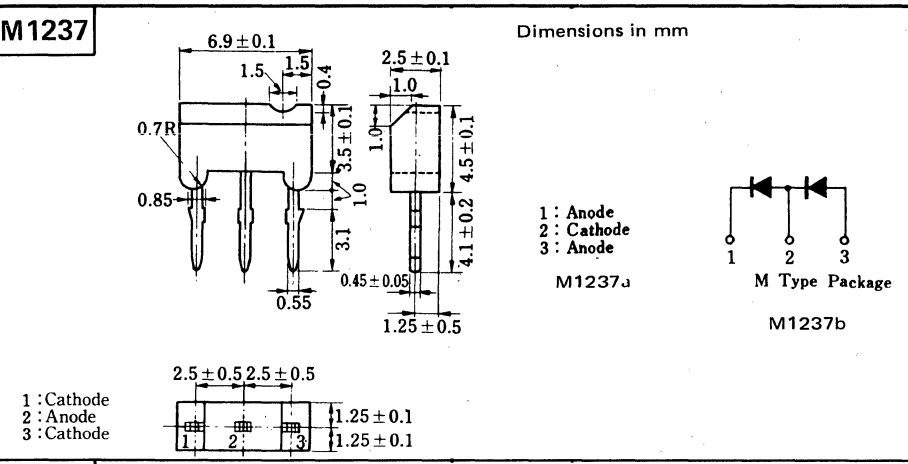

M1238

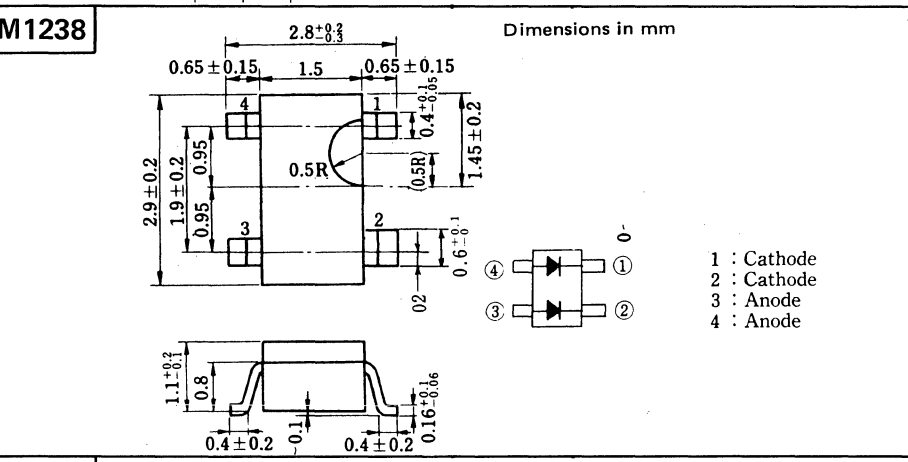

M1240

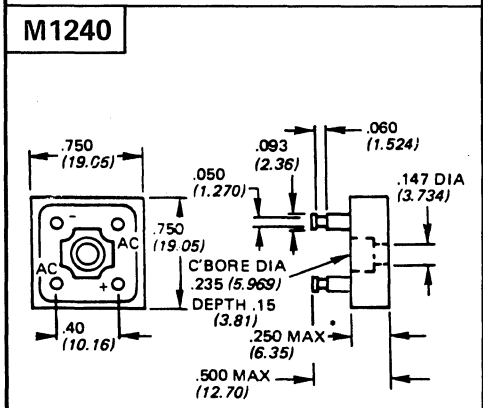

M1241

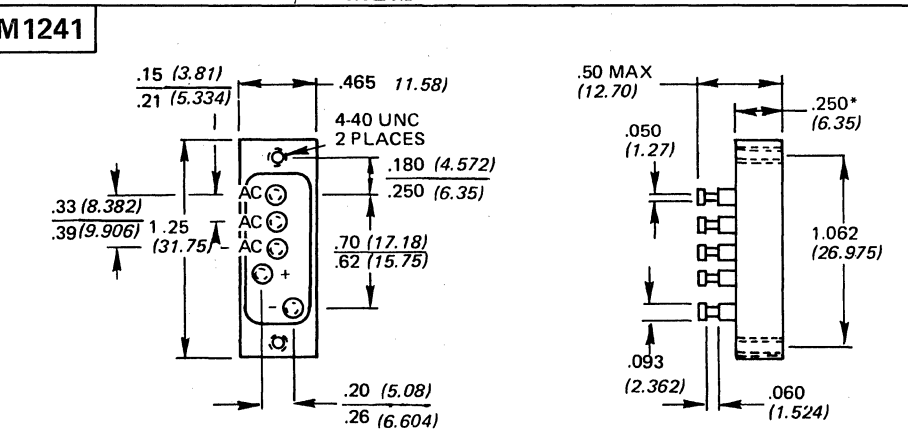

M1242

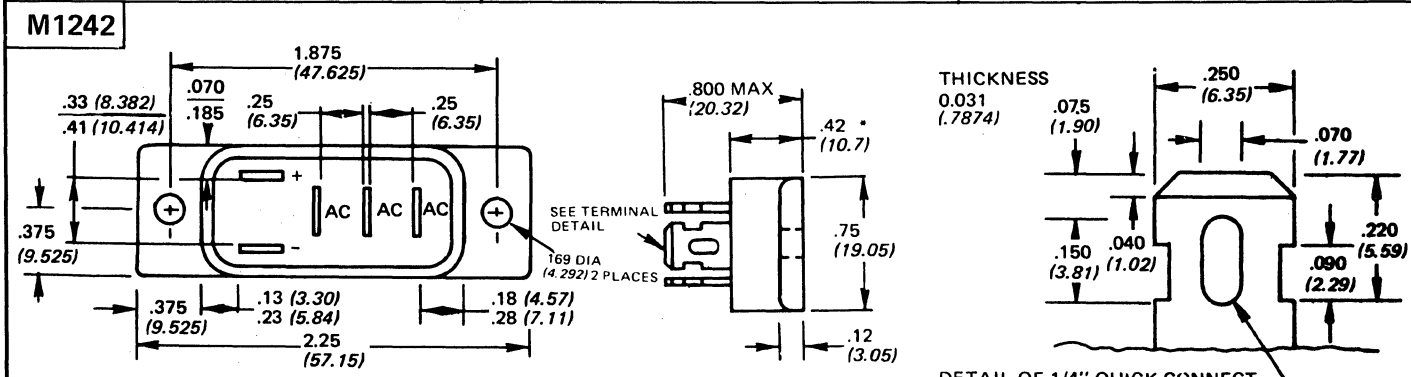

*POTTING SURFACE UNCONTROLLED

DETAIL OF 1/4" QUICK CONNECT TERMINAL, MODIFIED FOR USE AS WRAP AROUND AND/OR HOLE FOR CONNECTING WIRE

15. OUTLINE DRAWINGS

M1243

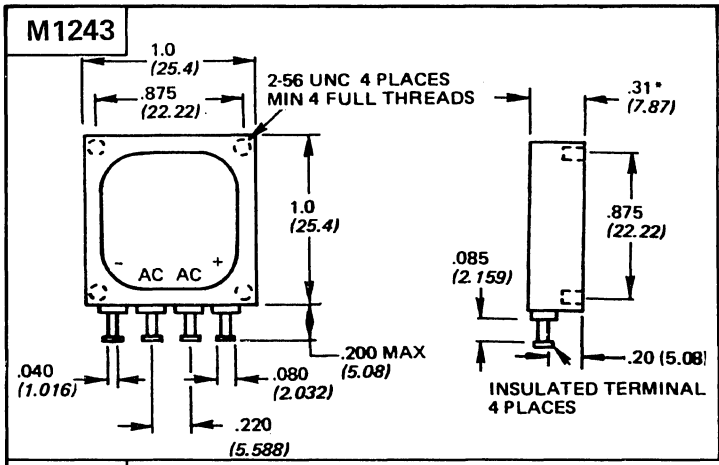

M1244

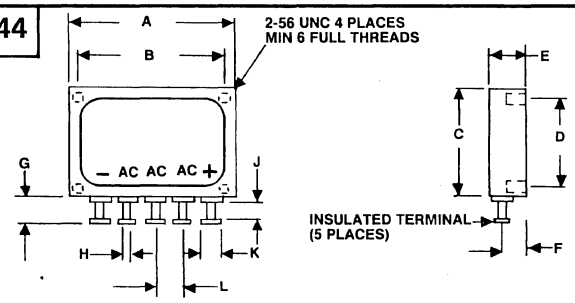

	A	B	C	D	E	F	G	H	J	K	L
M1244	1.12	1.00	.750	.625	.250	.160	.200 MAX	.040	.085	.080	.180
M1244a	1.50	1.37	.870	.750	.310	.260	.260 MAX	.070	.100	.096	.260

M1245

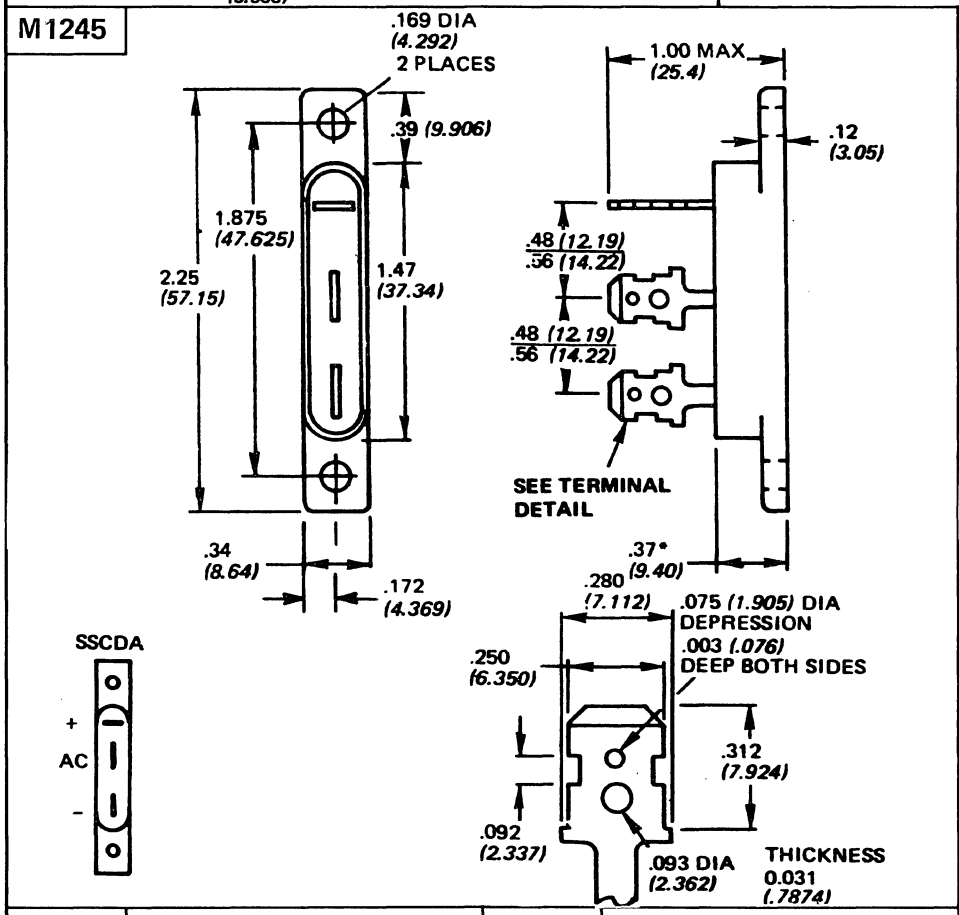

M1246

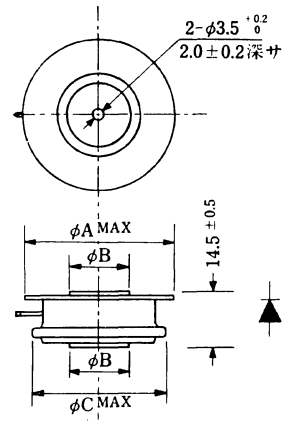

	φA MAX	φB MAX	φC MAX
M1246	40.0	16.0	36.0
M1246a	46.0	22.0	30.0
M1246b	36.0	42.0	50.5

Dimensions in mm

M1247

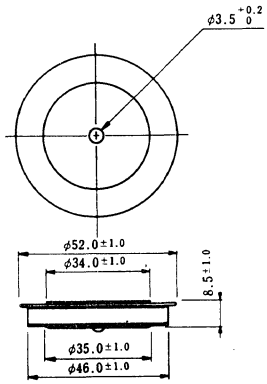

M1248

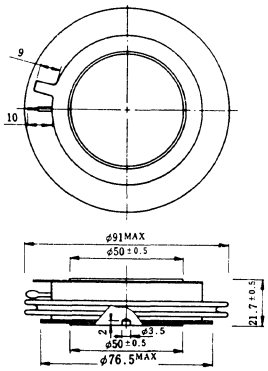

M1249

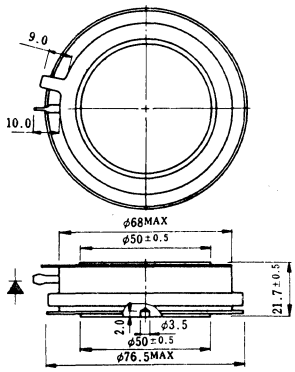

15. OUTLINE DRAWINGS

M1250

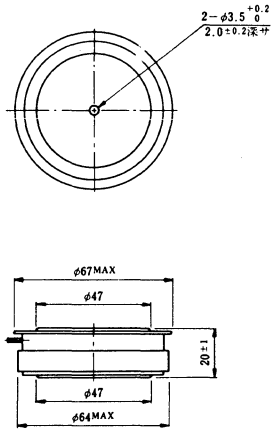

M1251

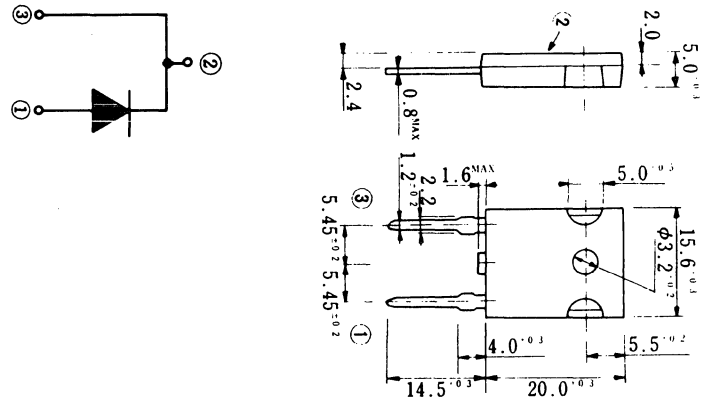

M1252

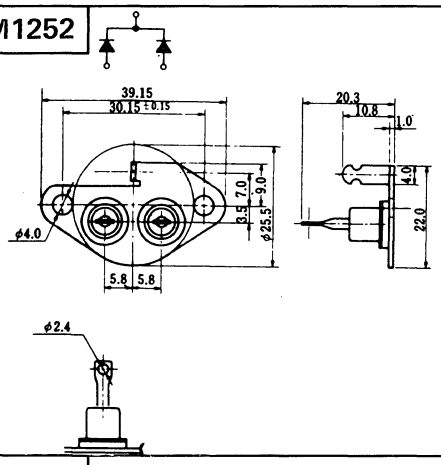

M1252a

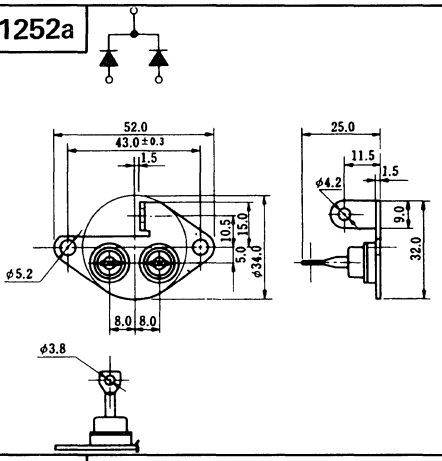

M1252b

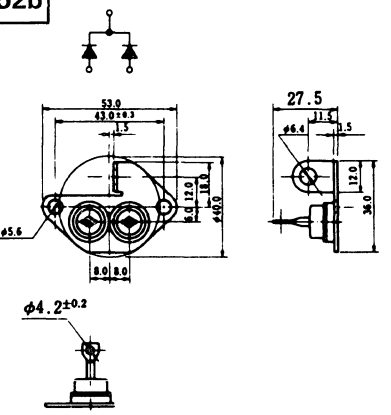

M1253

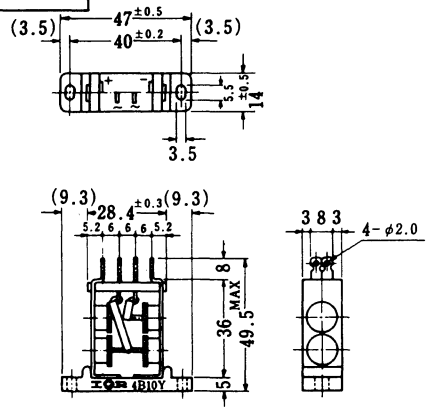

M1254

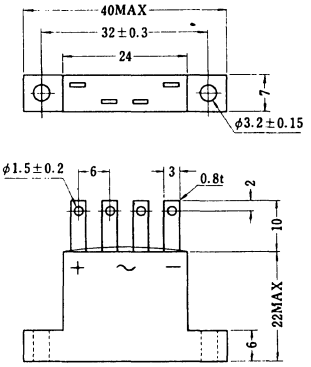

M1255

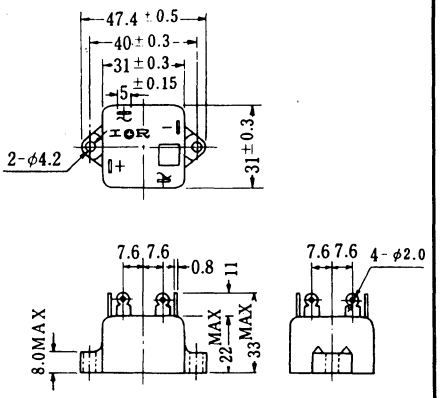

M1256

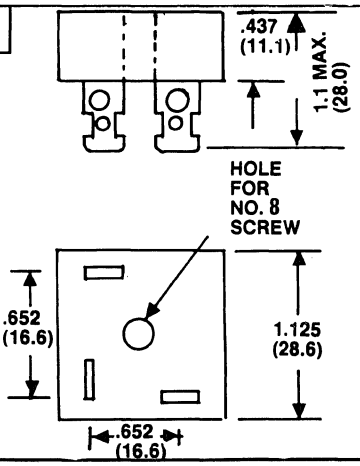

M1257

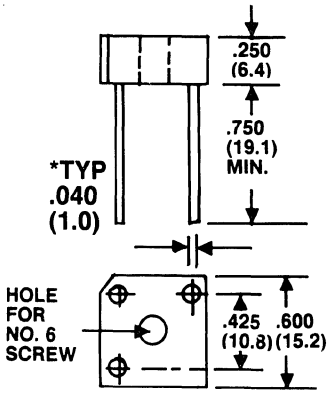

M1258

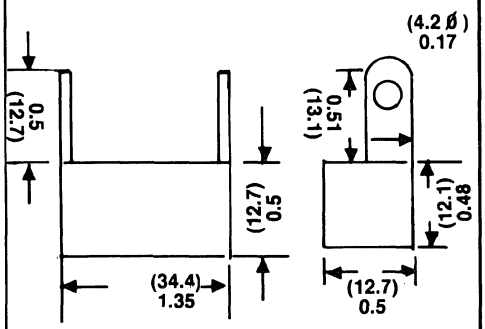

15. OUTLINE DRAWINGS

M1259

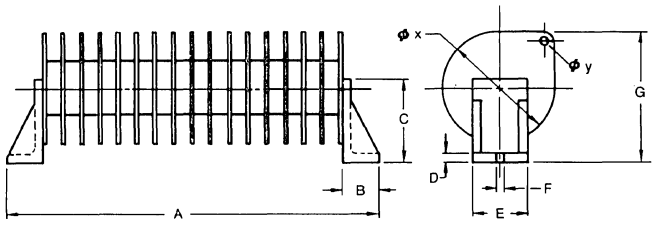

	DIMENSION A MAX		MTG. HOLE C-C
	In.	mm	
M1259	4.21	106.9	3.46
M1259a	5.53	140.4	4.78
M1259b	7.51	190.7	6.76
M1259c	8.83	224.3	8.08
M1259d	10.81	274.5	10.06
M1259e	12.13	308.1	11.38

M1260

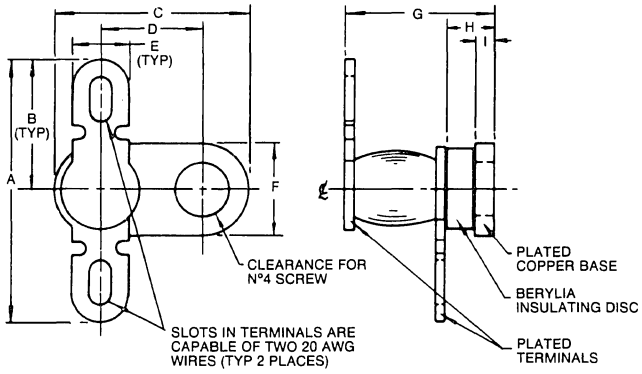

DIMENSIONS MAX		
	IN.	MM
A	.59	14.98
B	.29	7.36
C	.44	11.17
D	.24	6.09
E	.13	3.30
F	.21	5.33
G	.40	10.16
H	.12	3.04
I	.05	1.27

M1261

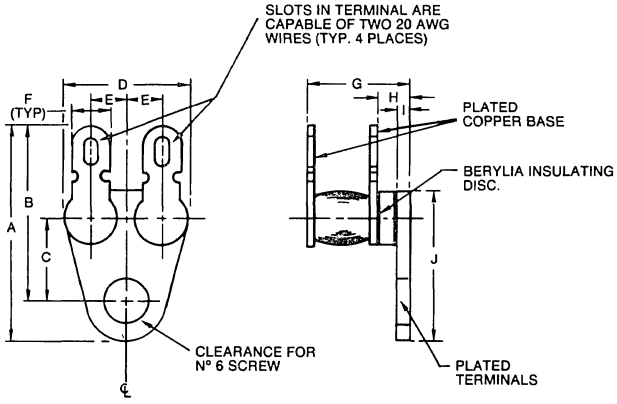

DIMENSIONS MAX		
	IN.	MM
A	.68	17.27
B	.55	13.97
C	.26	6.60
D	.41	10.41
E	.12	3.04
F	.13	3.30
G	.40	10.16
H	.12	3.04
I	.05	1.27
J	.47	11.94

M1262

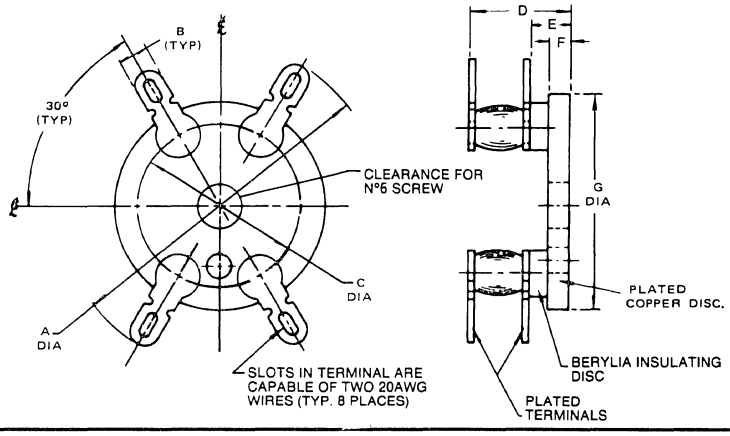

DIMENSIONS MAX		
	IN.	MM
A	1.20	30.48
B	.13	3.30
C	.62	15.74
D	.40	10.16
E	.16	4.06
F	.09	2.28
G	.79	20.06

15. OUTLINE DRAWINGS

M1263

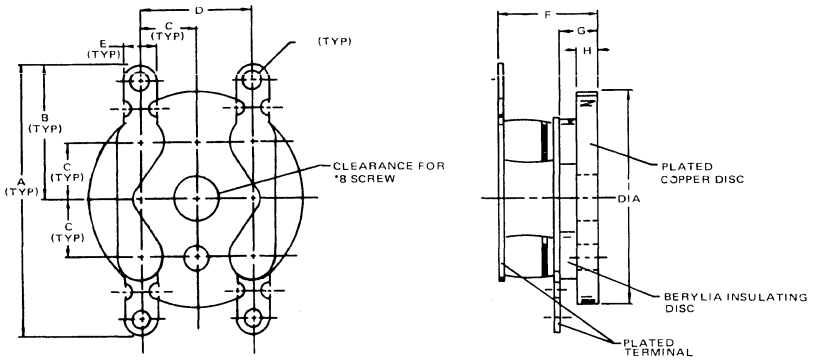

DIMENSIONS MAX		
	IN.	MM
A	1.02	25.91
B	.51	12.95
C	.22	5.58
D	.44	11.17
E	.13	3.30
F	.40	10.16
G	.16	4.06
H	.09	2.28
I	.79	20.06
0 x.	.077	1.95

M1264

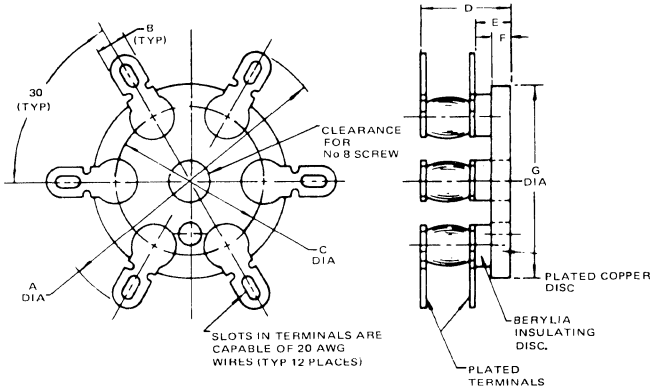

DIMENSIONS MAX		
	IN.	MM
A	1.20	30.48
B	.13	3.30
C	.62	15.74
D	.40	10.16
E	.16	4.06
F	.09	2.28
G	.79	20.06

M1265

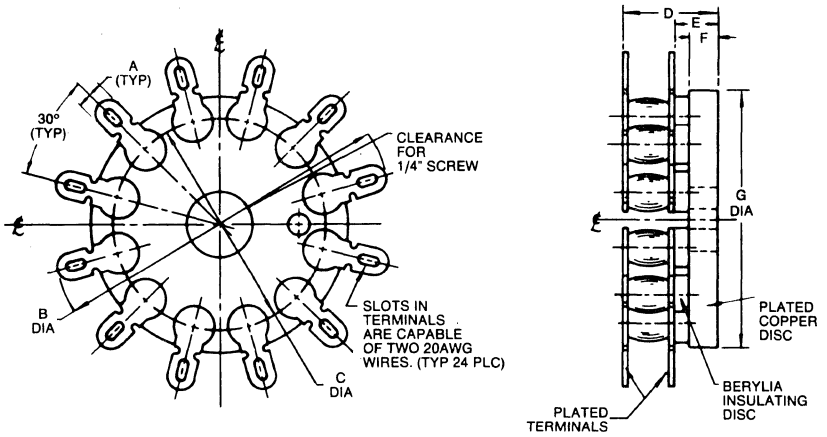

DIMENSIONS MAX		
	IN.	MM
A	.13	3.30
B	1.40	35.56
C	.94	23.87
D	.43	10.92
E	.20	5.08
F	.13	3.30
G	1.12	28.44

M1266

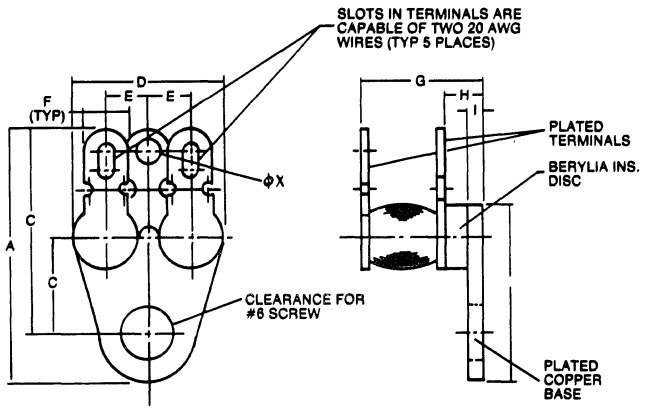

DIMENSIONS MAX		
	IN.	MM
A	.63	17.27
B	.55	13.97
C	.26	6.60
D	.41	10.41
E	.12	3.04
F	.13	3.30
G	.40	10.16
H	.12	3.04
I	.05	1.27
J	.47	11.93
0 x	.077	1.95

15. OUTLINE DRAWINGS

M1267

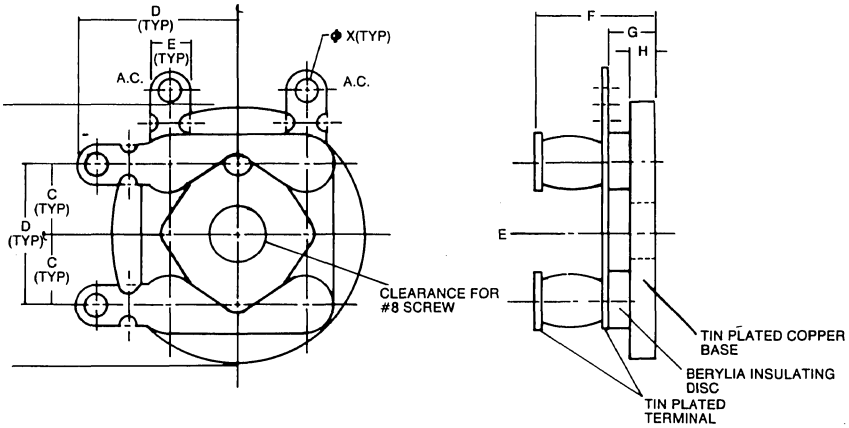

DIMENSIONS		
DIM.	MAX	
	IN.	MM
A	.79	20.06
B	.44	17.17
C	.22	5.58
D	.51	12.95
E	.13	3.30
F	.40	10.16
G	.16	4.06
H	.09	2.28

M1268

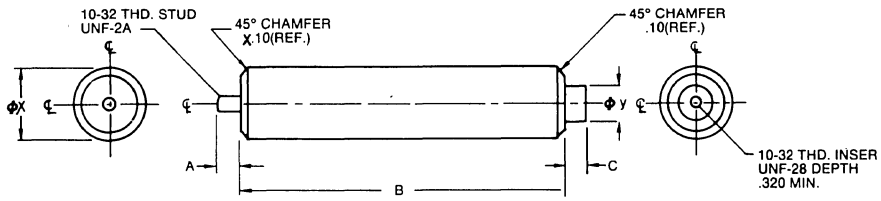

DIM	MM		INCHES	
	MIN.	MAX.	MIN.	MAX.
A	7.57	8.59	.298	.338
B	113.54 167.64 221.36	115.06 169.16 223.01	4.47 6.60 8.71	4.53 6.66 8.78
C	7.11	8.13	.280	.320
0 X	24.64	26.16	.970	1.03
0 Y	12.19	13.21	.480	.520

M1269

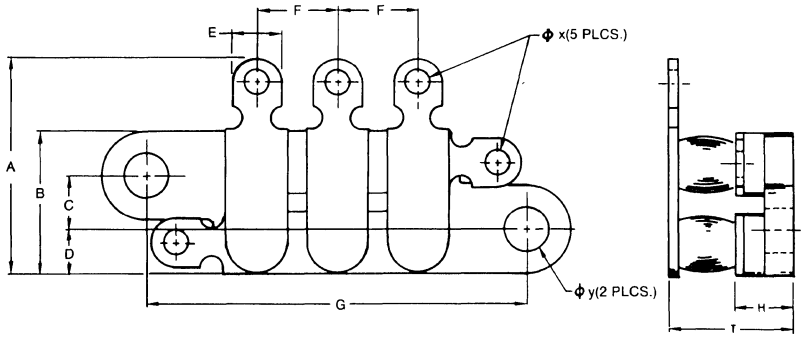

DIM	MM		INCHES	
	MIN.	MAX.	MIN.	MAX.
A	15.2	15.5	.600	.611
B	10.0	10.3	.395	.405
C	3.68	3.94	.145	.155
D	3.04	3.30	.120	.130
E	3.37	3.63	.133	.143
F	5.58	5.84	.220	.230
G	26.92	27.18	1.060	1.070
H	3.78	4.44	.149	.175
I	7.72	9.65	.304	.380
0 X	1.70	1.95	.067	.077
0 Y	3.60	3.71	.142	:146

M1270

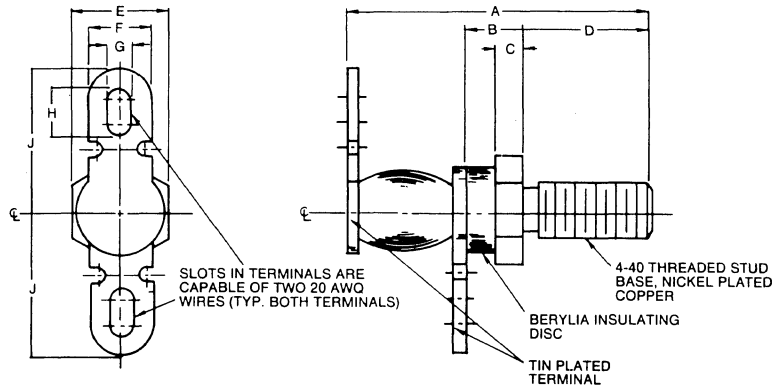

DIMENSIONS		
DIM.	MAX	
	IN.	MM
A	.65	16.50
B	.13	3.30
C	.06	1.52
D	.25	6.35
E	.19	5.01
F	.13	3.30
G	.05	1.39
H	.10	2.66
J	.29	7.42

15. OUTLINE DRAWINGS

M1271

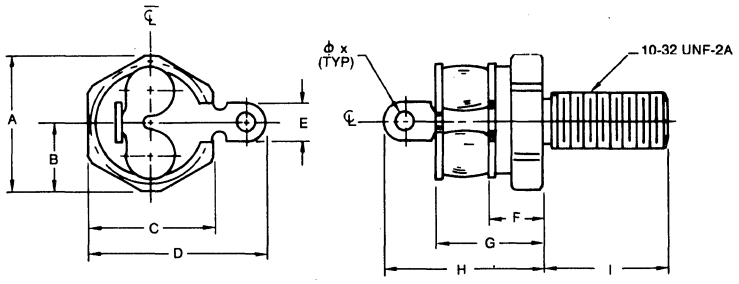

DIM	MM		INCHES	
	MIN.	MAX.	MIN.	MAX.
A	11.68	12.19	.46	.48
B	5.84	6.09	.23	.24
C	10.66	11.17	.42	.44
D	14.98	15.49	.59	.61
E	3.30	3.63	.13	.14
F	4.31	4.82	.17	.19
G	9.14	9.65	.36	.38
H	14.22	14.73	.56	.58
I	10.66	11.43	.42	.45
0 X	1.52	2.03	.06	.08

M1272

REV 2

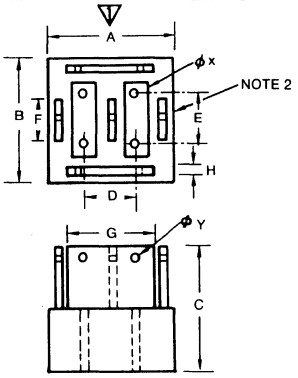

DIMN	MM		INCHES		NOTE
	MIN	MAX	MIN	MAX	
A	-	73.8	-	2.905	
B	-	64.3	-	2.53	
C	-	51.6	-	2.03	
D	27.8	29.4	1.095	1.155	
E	24.6	26.2	0.97	1.03	
F	-	19.8	-	0.78	
G	-	54.8	-	2.155	
H	1.77	3.31	0.07	0.13	
0 X	4.34	5.87	0.171	0.231	4 plcs
0 Y	4.03	5.57	0.159	0.219	7 plcs

▽ TERMINAL ONLY APPLIES TO FULL-WAVE BRIDGE.
NOTE 2: - A.C. TERMINALS THREE PLACES.

M1273

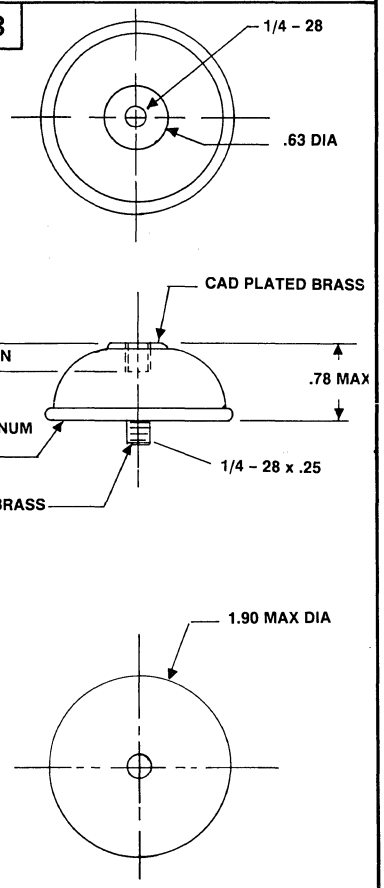

M1274

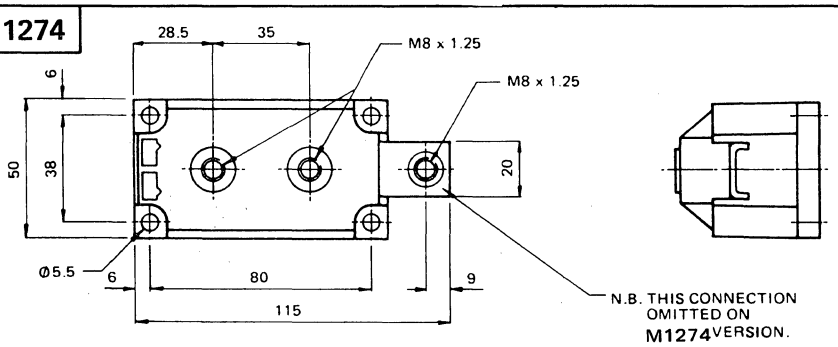

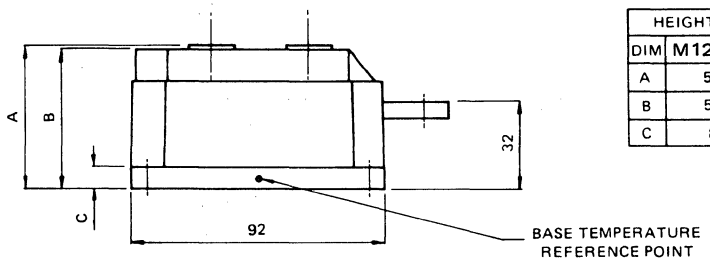

HEIGHT DIMENSIONS		
DIM	M1274-a	M1247b-c
A	52	54
B	51	53
C	8	10

All dimensions in millimetres

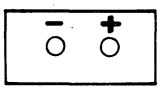

M1247a/M1247b

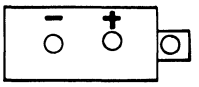

M1247/M1247c

M1275

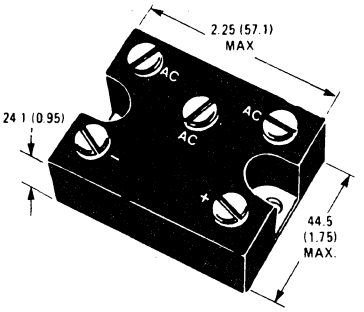

M1275a has no center AC terminal

15. OUTLINE DRAWINGS

M1276

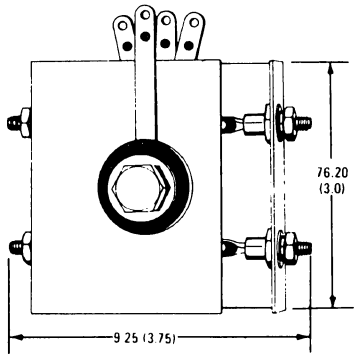

M1277

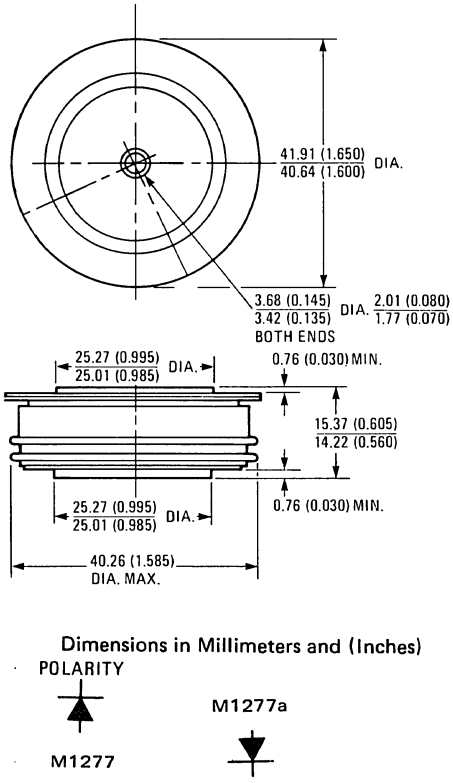

Dimensions in Millimeters and (Inches)

POLARITY

M1277

M1277a

M1278

"LH" outline code

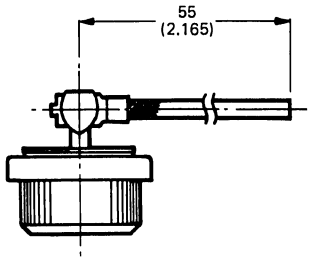

All dimensions in millimetres

M1278b

"LV" outline code

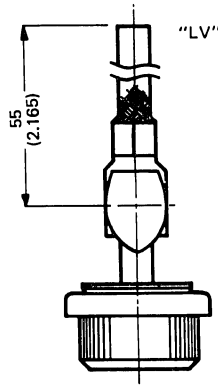

M1279

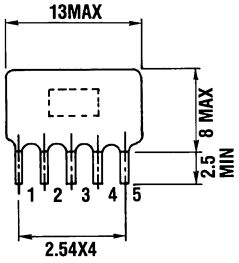

M1279a

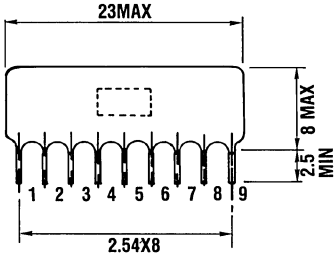

M1280

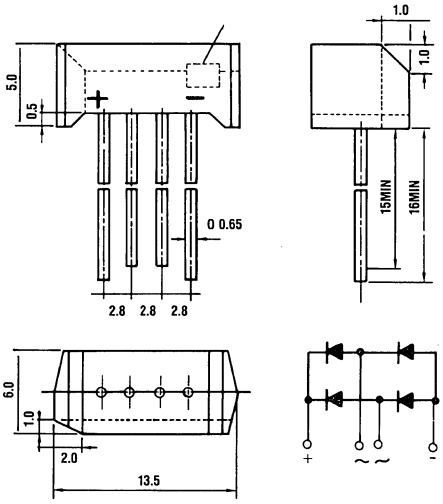

M1281

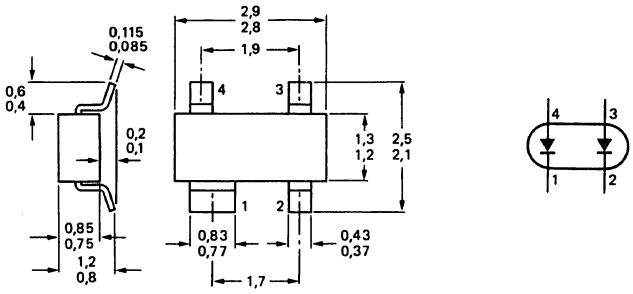

15. OUTLINE DRAWINGS

M1283

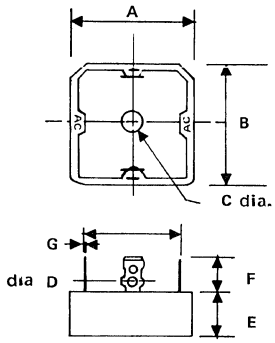

	A	B	C	D	E	F	G
M1283	25.6 26.8	25.6 26.8	4.32 4.83	2.79 2.92	12.45 13.97	9.91 11.43	.710 .890
M1283a	34.5 35.3	34.5 35.3	4.32 4.83	2.79 2.92	13.21 14.73	9.91 11.43	.710 .890
M1283b	34.9 35.7	34.9 35.7	4.30 4.80	2.80 2.90	13.20 14.20		.710 .890

M1284

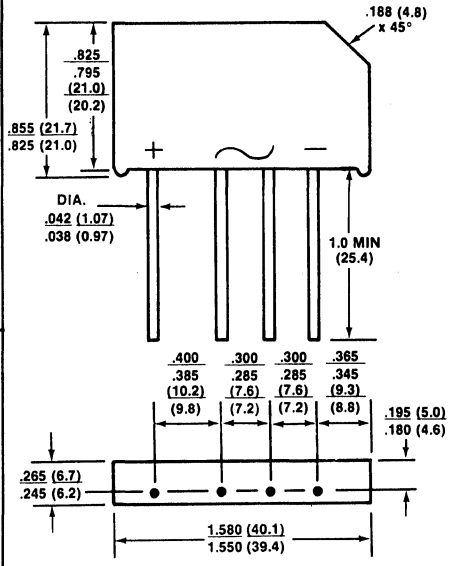

Dimensions in inches and (millimeters)

M1285

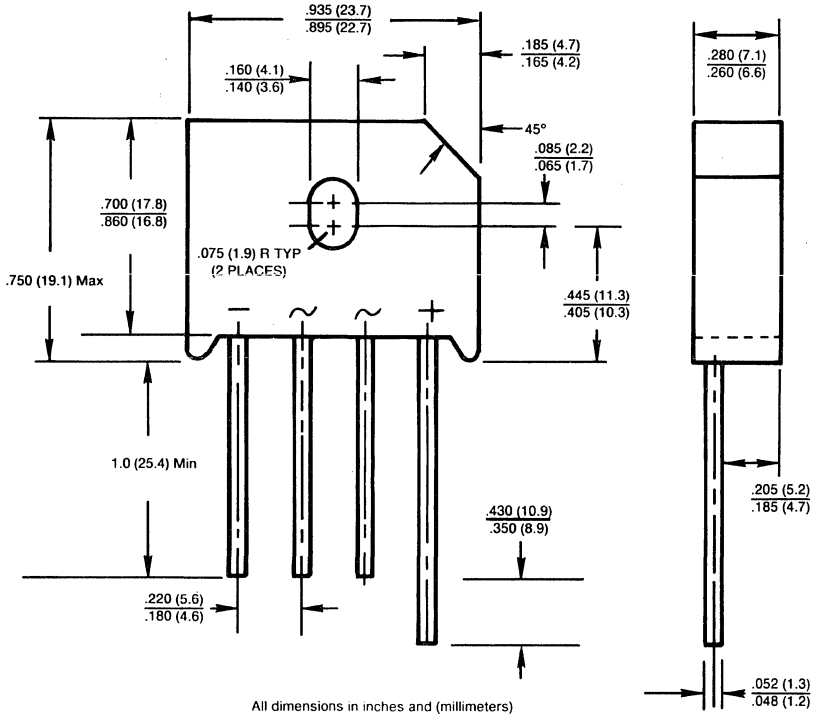

All dimensions in inches and (millimeters)

M1286

Dimensions in mm

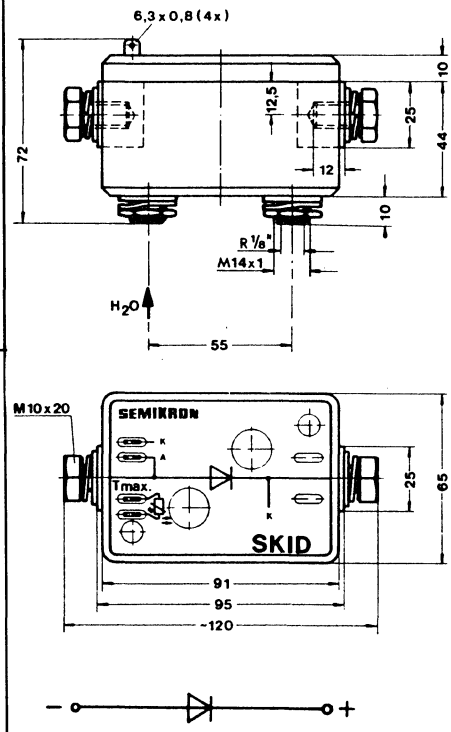

M1287

Dimensions in mm

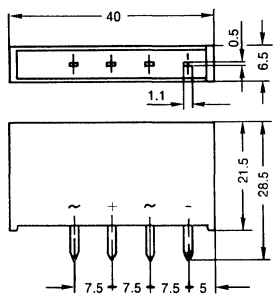

15. OUTLINE DRAWINGS

M1288

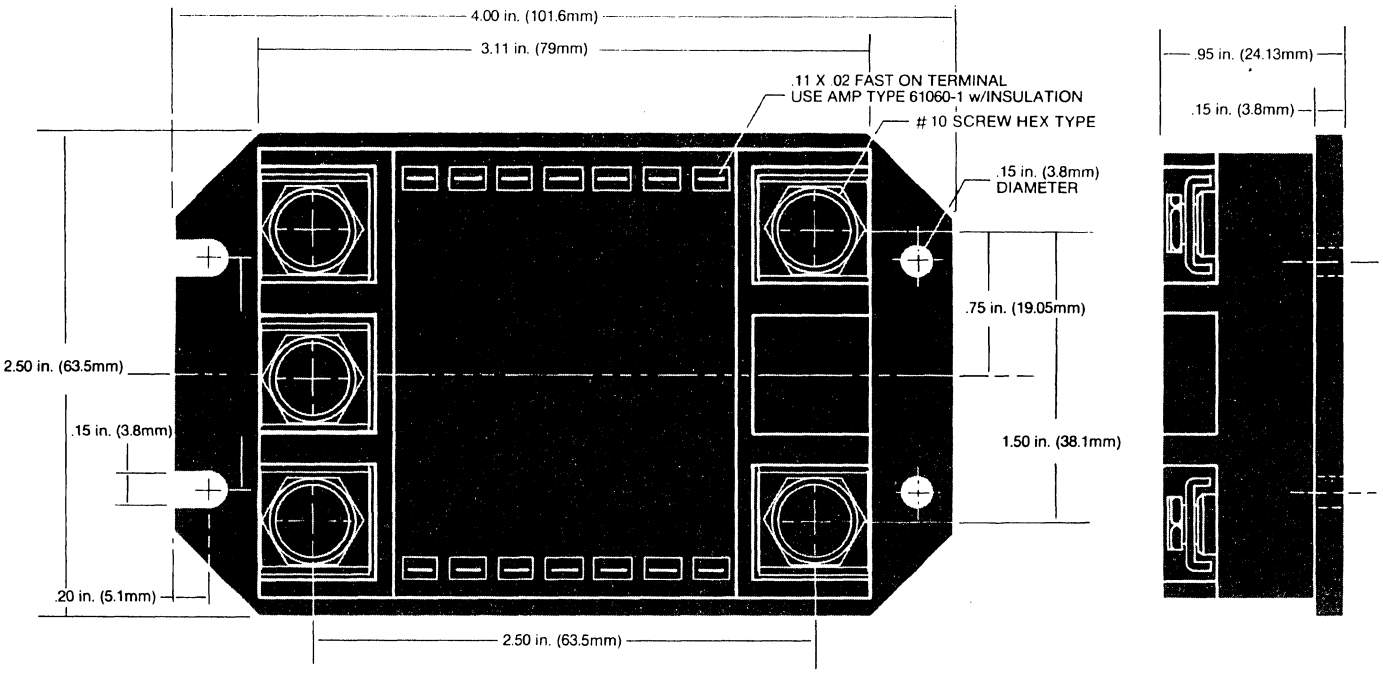

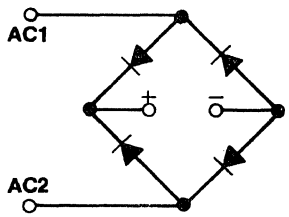

M1288

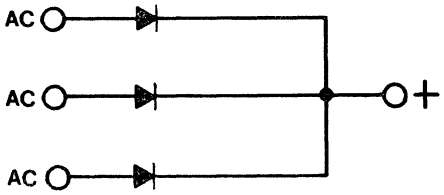

M1288a

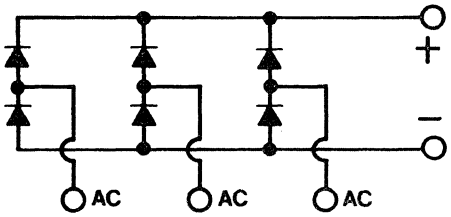

Three phase, full wave, 6 diodes
(75 Amperes and above)

M1288b

M1289

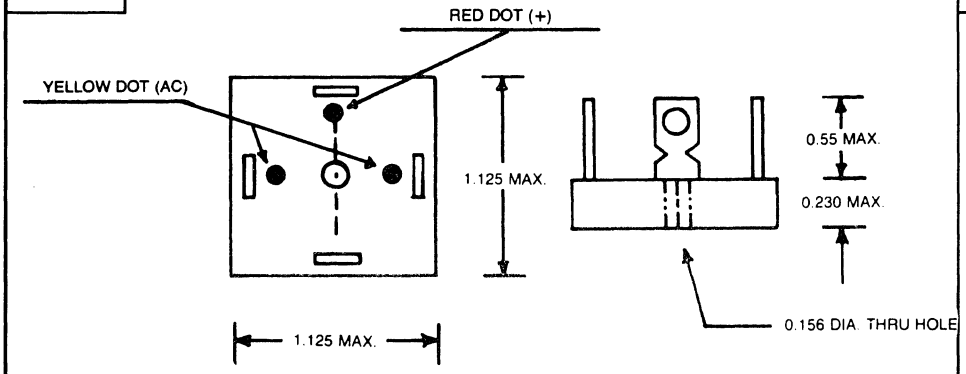

15. OUTLINE DRAWINGS

M1290

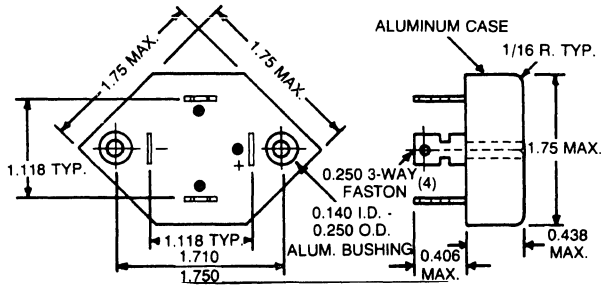

M1291

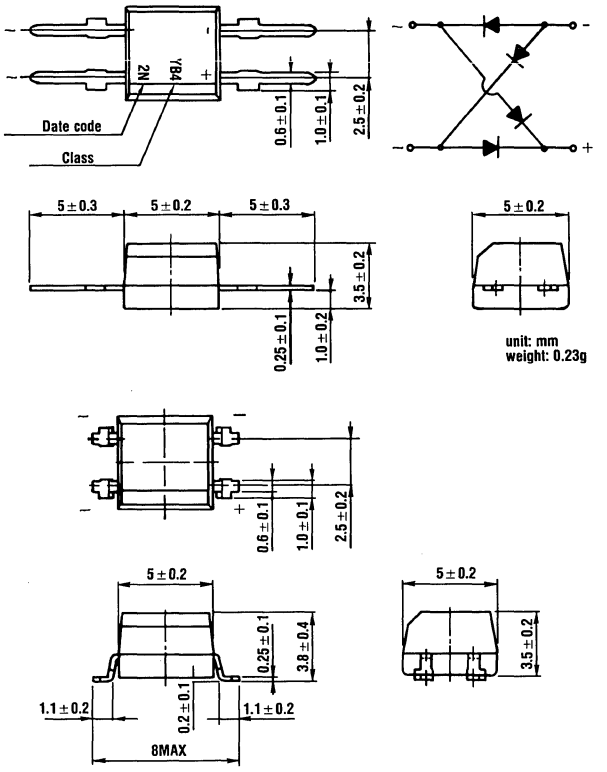

M1292

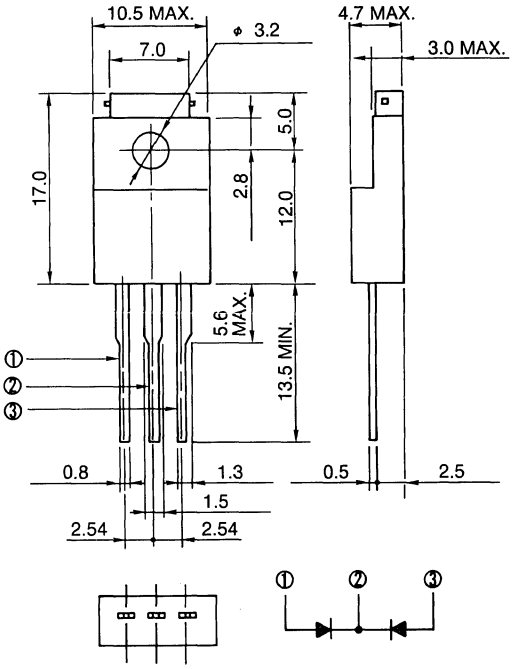

M1293

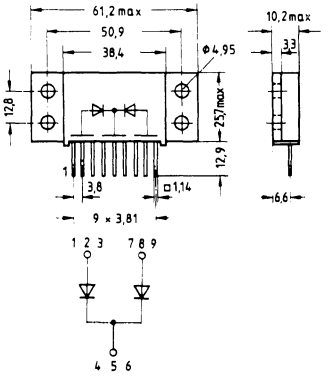

M1294

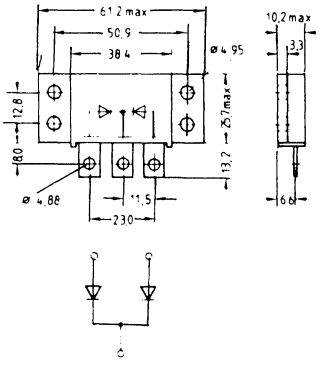

15. OUTLINE DRAWINGS

M1295

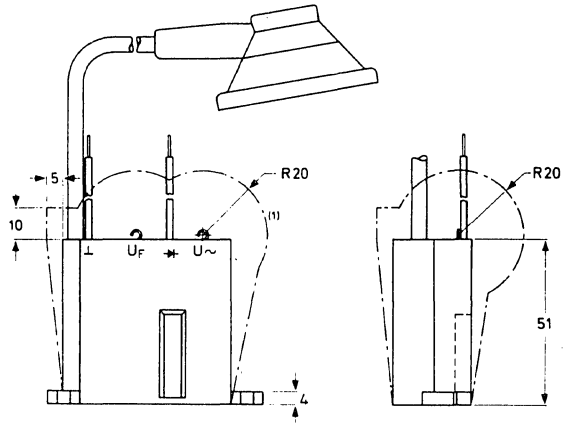

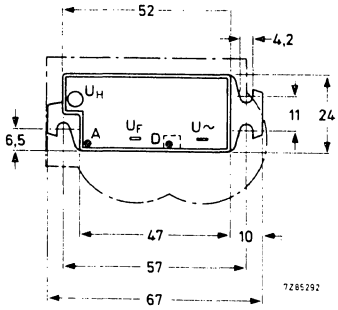

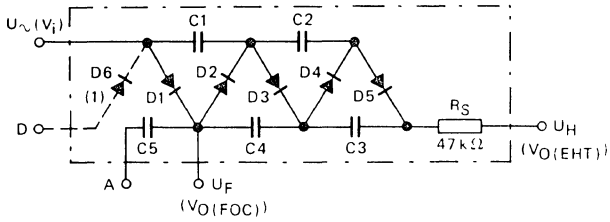

M1296

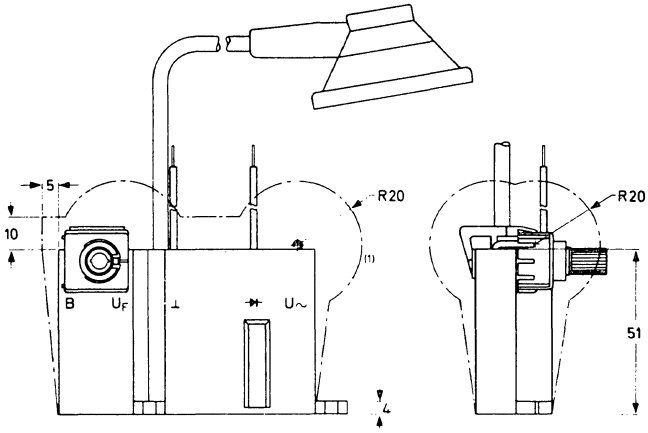

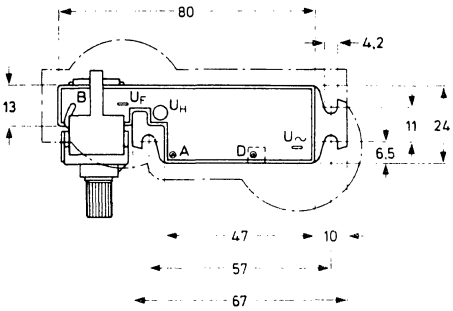

* Clearance between encapsulation and any other component

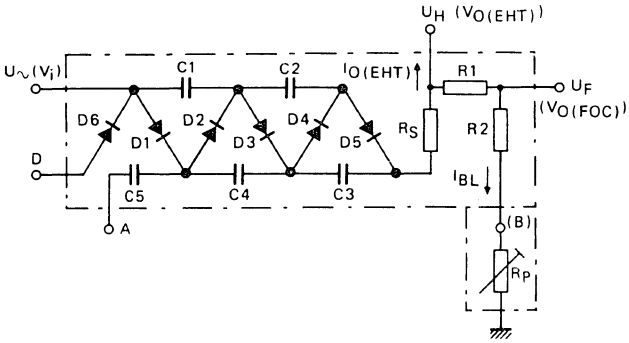

15. OUTLINE DRAWINGS

M1299

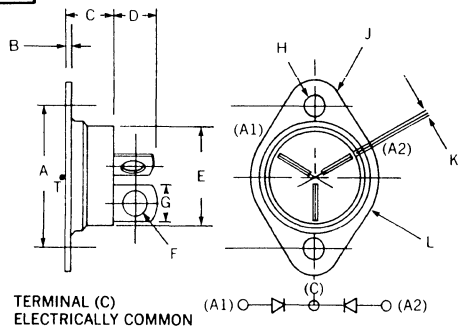

TERMINAL (C)
ELECTRICALLY COMMON
TO BASE PLATE

	INCHES		MILLIMETERS	
	MIN.	MAX.	MIN.	MAX.
A	1.177	1.197	20.39	30.40
B	.030	.035	.762	.889
C	.365	.385	9.27	9.78
D	.370	.390	9.40	9.91
E	—	.880	—	22.35
F	.160	.180	4.06	4.57
G	.270	.290	6.87	7.37
H	.151	.161	3.84	4.09
J	—	.188 RAD.	—	4.78 RAD.
K	.030	.035	.762	.889
L	—	.525 RAD.	—	13.34 RAD.
T	T_{BP} Ref. Point - Geometric Center of Base Plate			

M1303

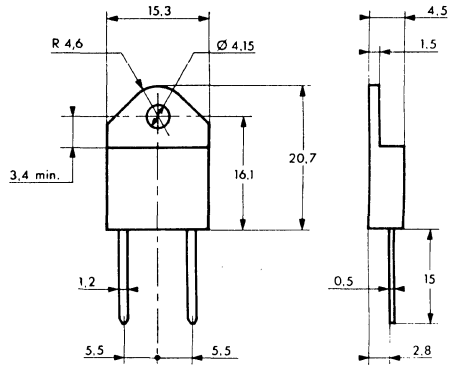

M1300

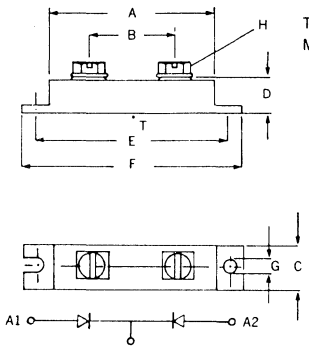

Terminal Torque: 50 (Min.) 75 (Max.) lb. — in.
Mounting Base Torque: 30 (Min.) 40 (Max.) lb. — in.

	INCHES		MILLIMETERS	
	MIN.	MAX.	MIN.	MAX.
A		2.63		66.80
B	1.35	1.40	34.29	35.56
C	.70	.80	17.78	20.32
D		.625		15.88
E	3.14	3.16	79.76	80.26
F		3.65		92.71
G	.25	.27	6.35	6.86
H	1/4 — 20 UNF With Captive Lockwasher			
T	T_{BP} Ref. Point - Geometric Center of Base Plate			

M1304

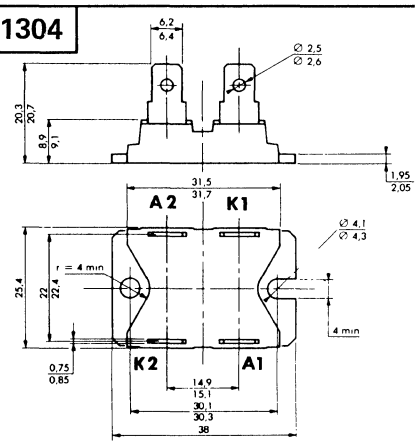

M1301

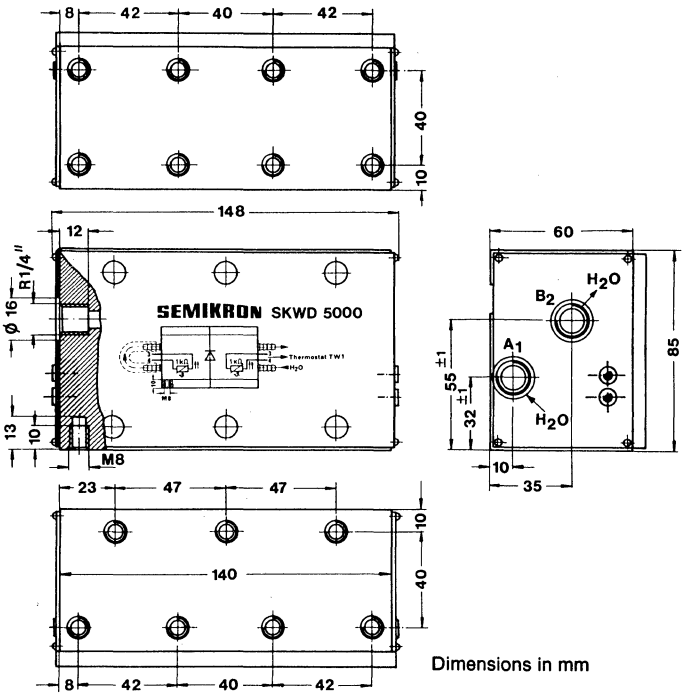

Dimensions in mm

15. OUTLINE DRAWINGS

M1302

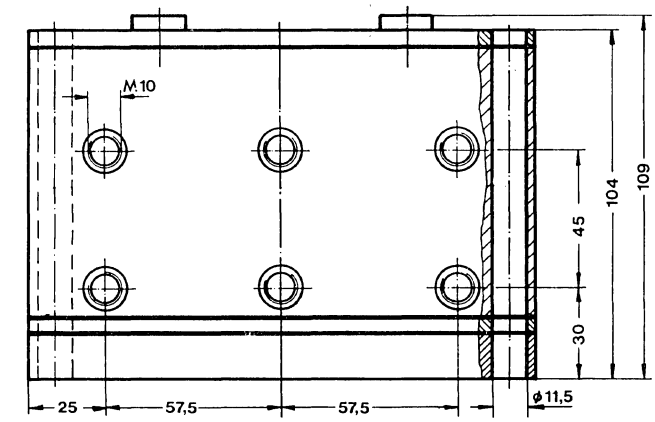

Optional protective thermostat available – consult MFR.

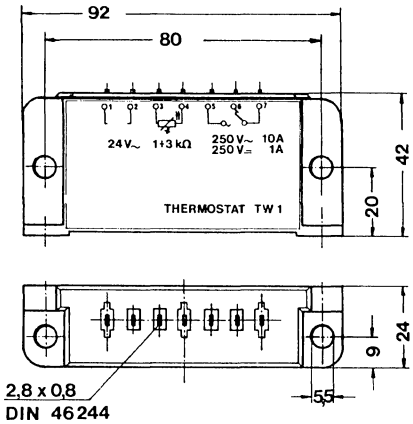

Dimensions in mm

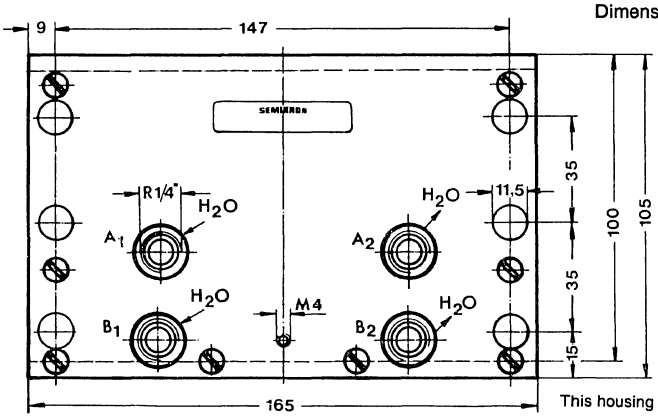

This housing designed to be water cooled

M1305

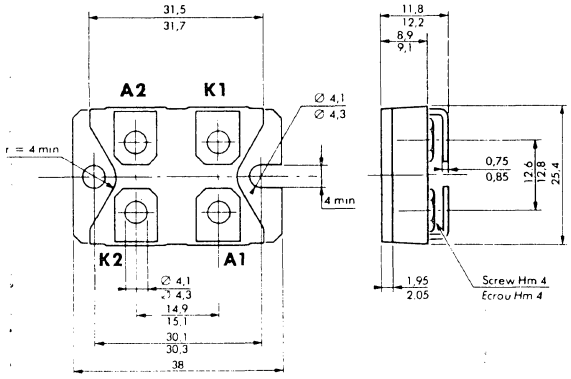

M1307

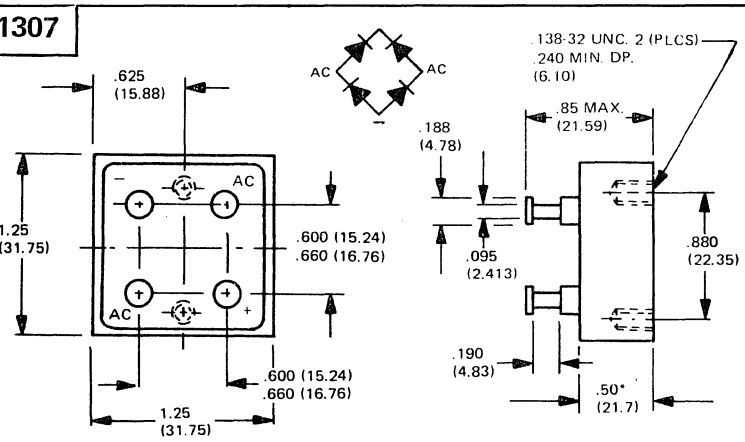

M1306

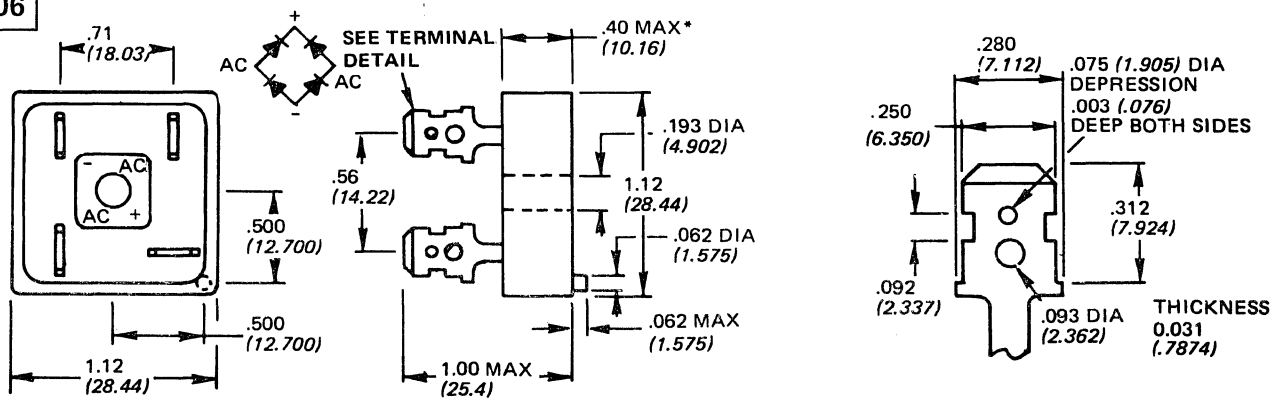

15. OUTLINE DRAWINGS

M1308

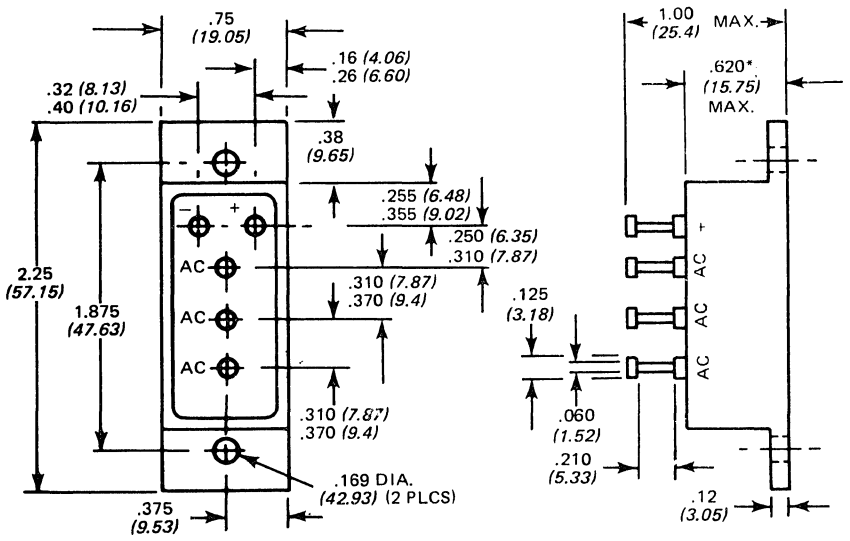

M1309

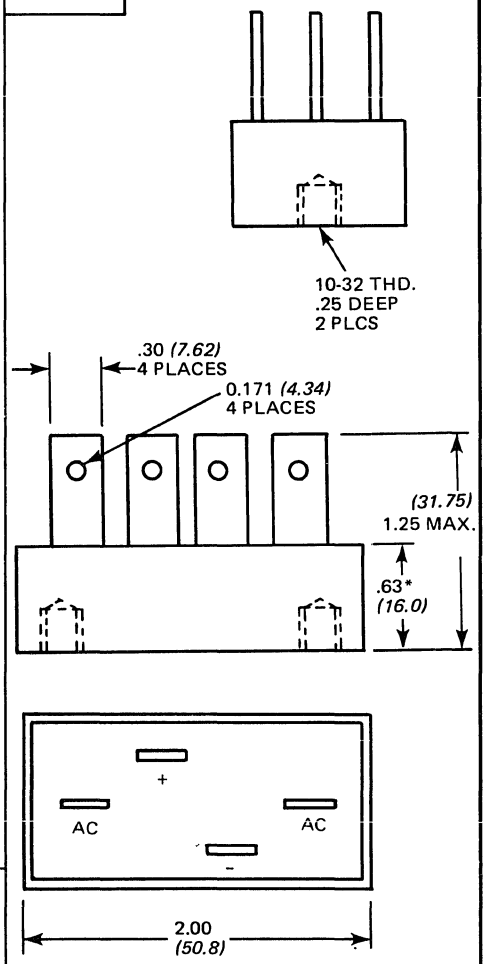

M1310

LEAD DIAM. .029 (.74)
.035 (.87)

LENGTH .60 (15.24) MIN

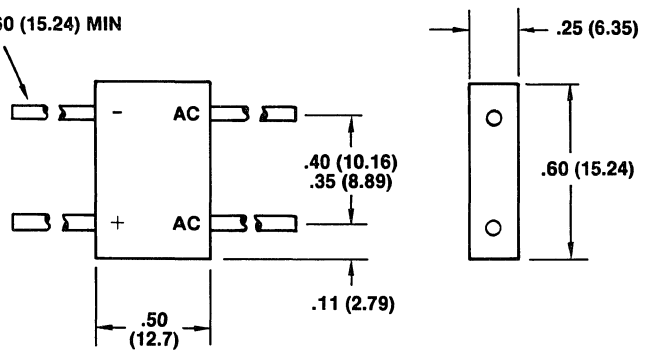

M1311

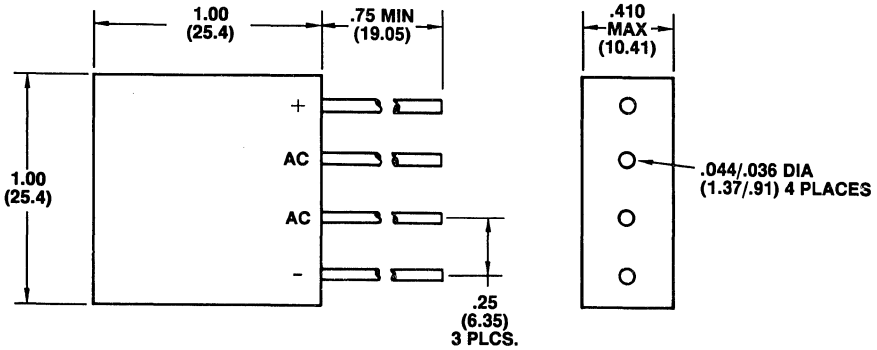

M1314

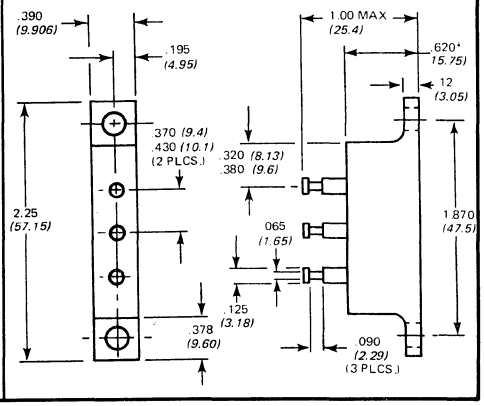

15. OUTLINE DRAWINGS

M1312

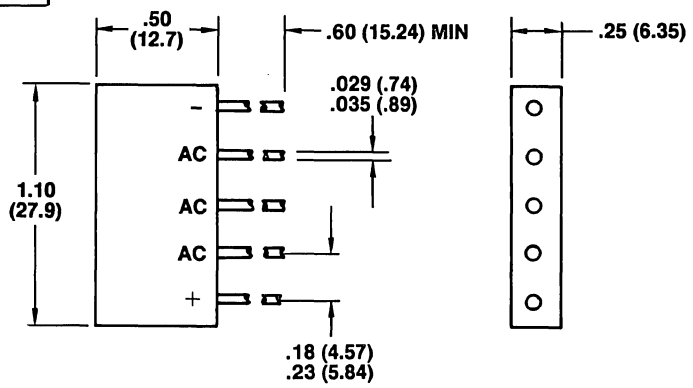

M1316

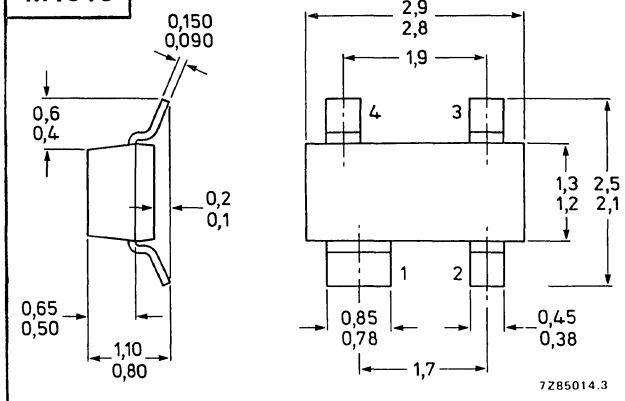

M1313

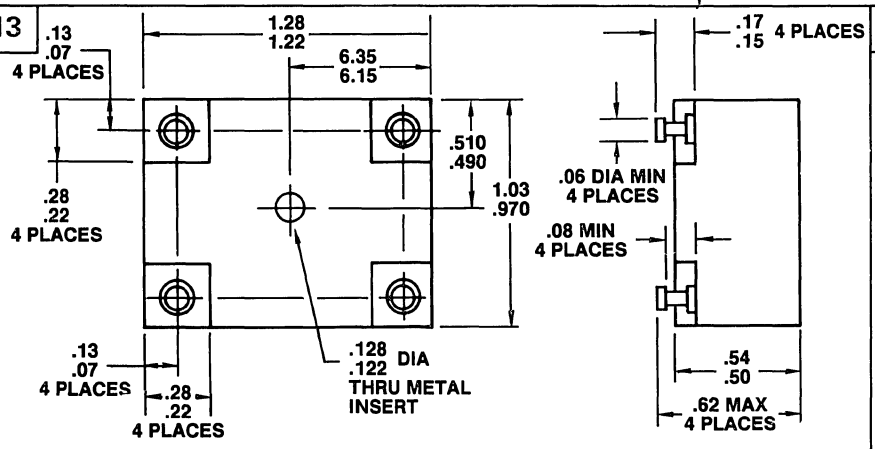

M1317

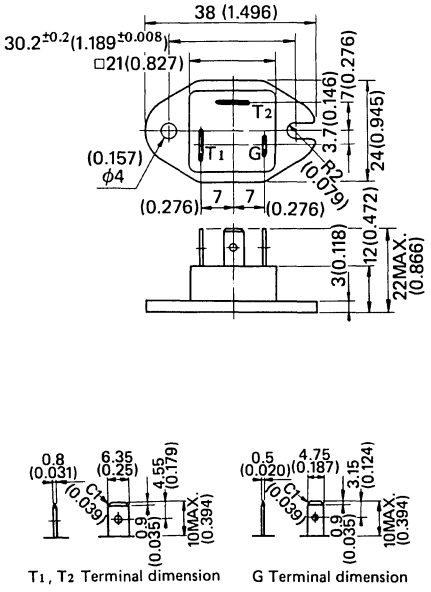

M1315

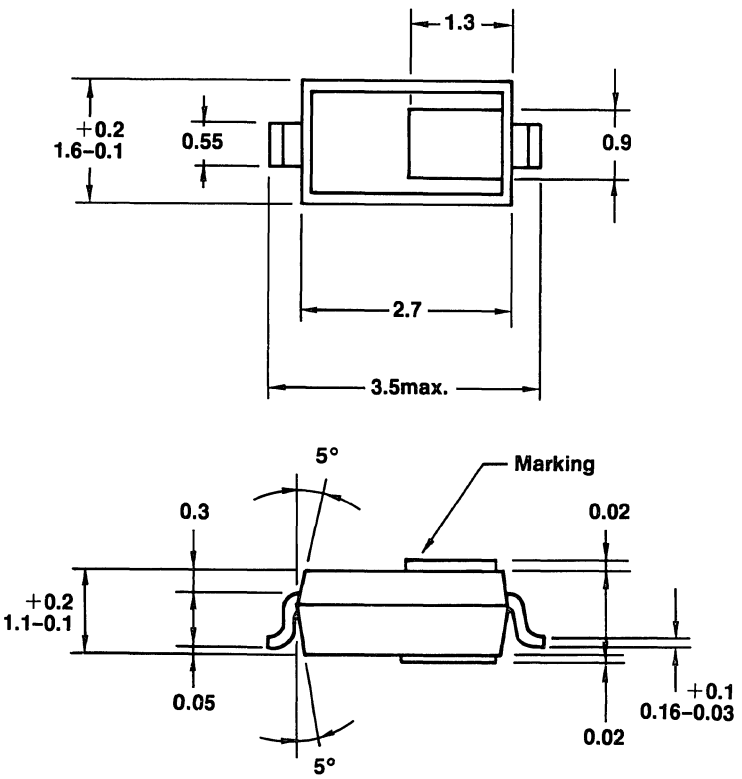

M1318

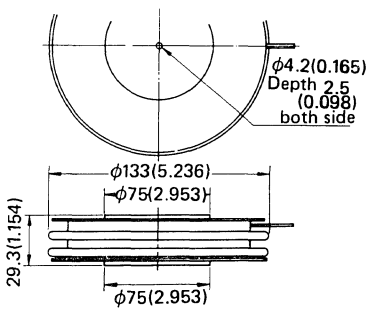

15. OUTLINE DRAWINGS

M1319

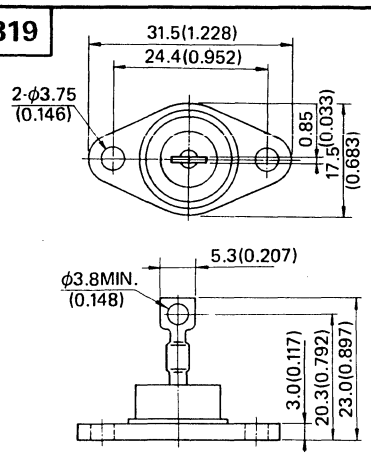

M1320

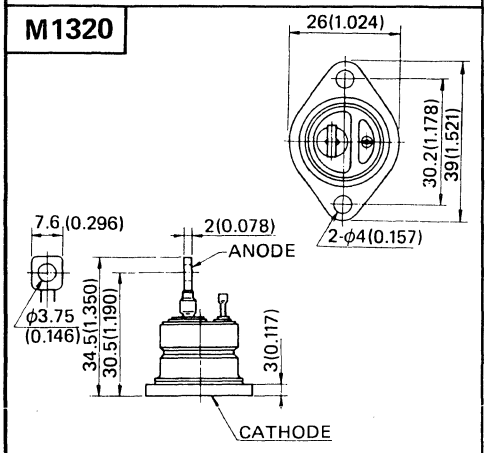

M1321

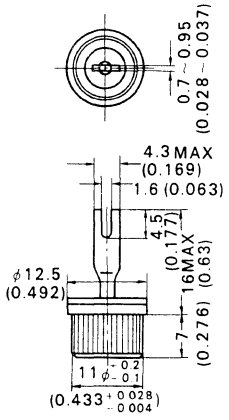

M1322

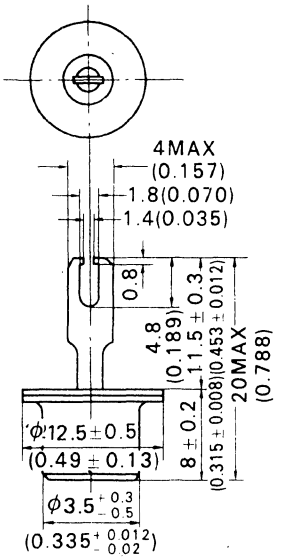

M1323

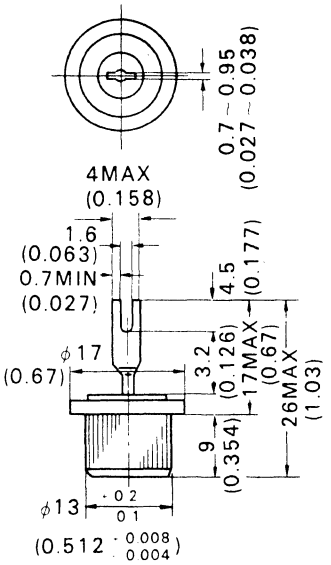

M1324

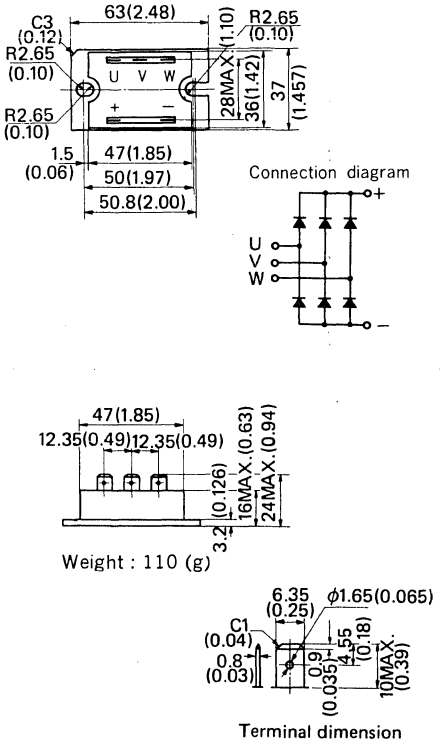

M1325

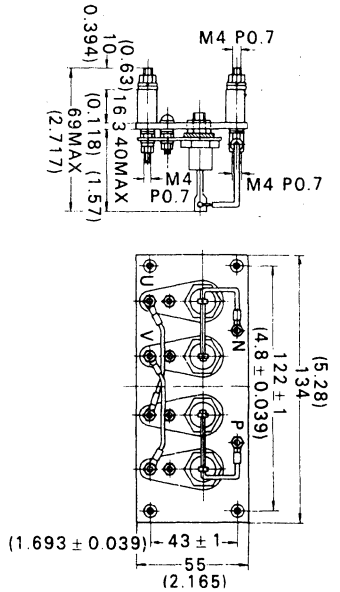

15. OUTLINE DRAWINGS

M1326

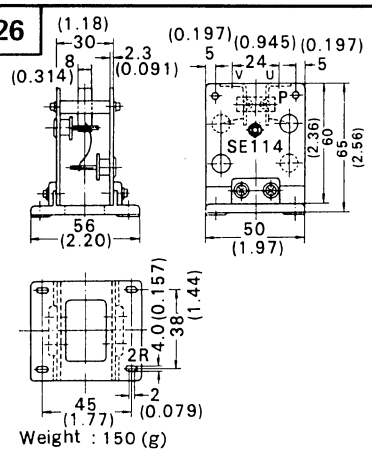

Weight : 150 (g)

M1330

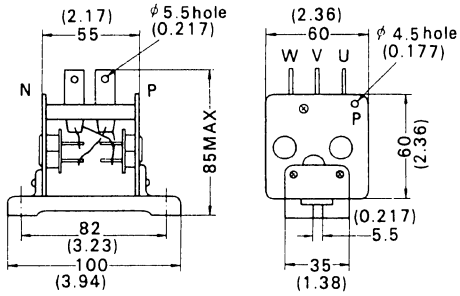

M1333

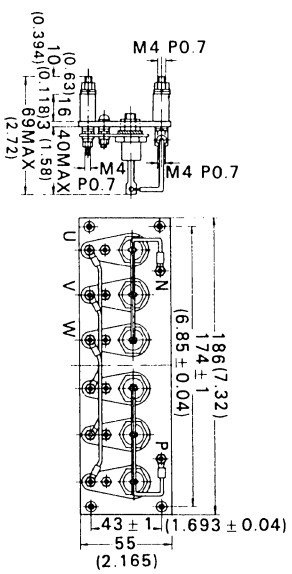

M1327

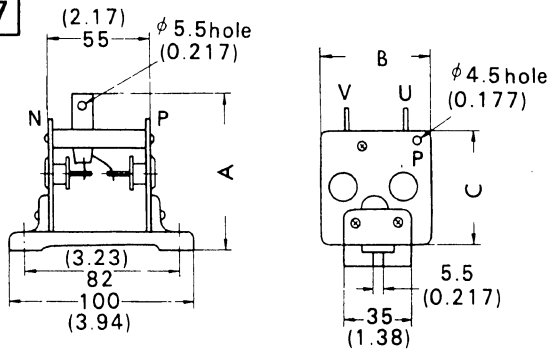

	A	B	C
M1327	85 max	60 (2.36)	60 (2.36)
M1327a	140 max	115 (4.53)	115 (4.53)

M1328

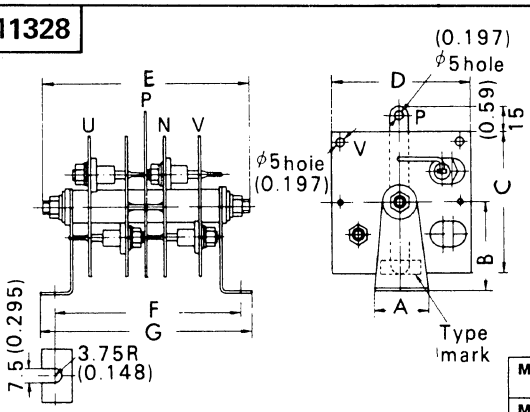

	A	B	C	D	E	F	G
M1328	30 (1.18)	50 (1.97)	80 (3.15)	80 (3.15)	115 (4.53)	101 (3.98)	119 (4.69)
M1328a	40 (1.57)	70.5 (2.76)	115 (4.53)	115 (4.53)	115 (4.53)	101 (3.98)	119 (4.69)

M1334

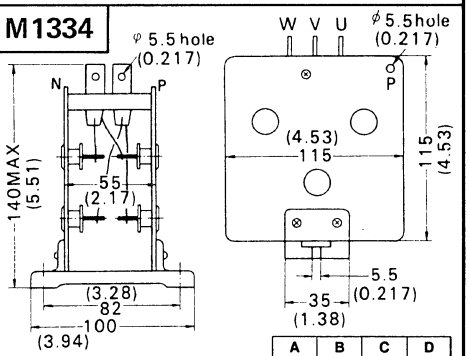

	A	B	C	D
M1335	40 (1.57)	115 4.53	115 4.53	70.5 (2.76)
M1335a	30 (1.18)	80 (3.16)	80 (3.16)	50 (1.97)

M1329

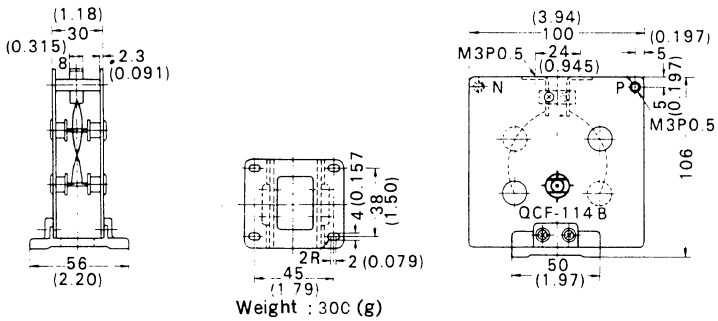

Weight : 300 (g)

15. OUTLINE DRAWINGS

M1331

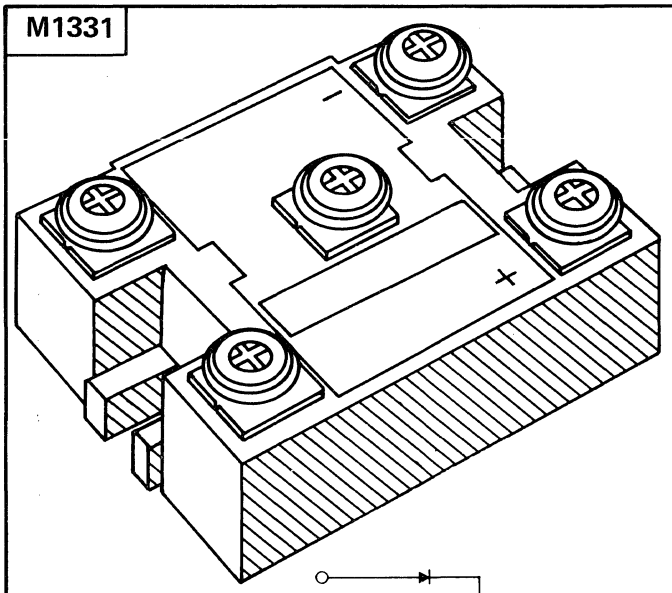

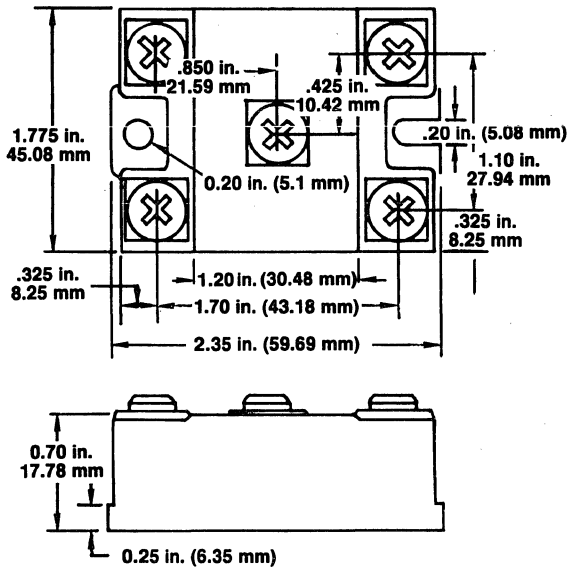

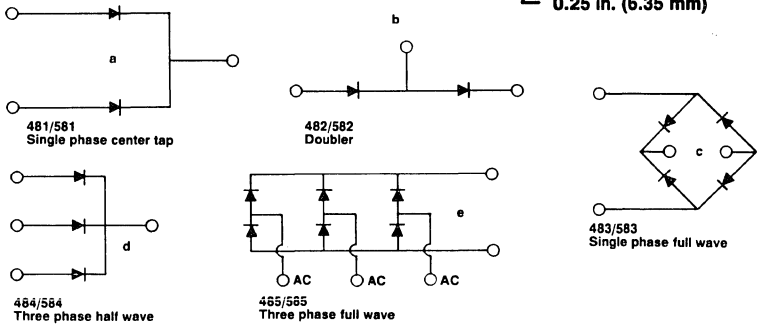

M1332

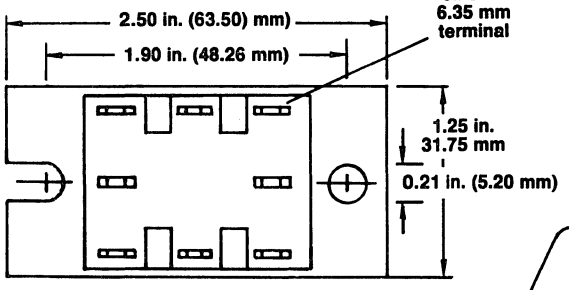

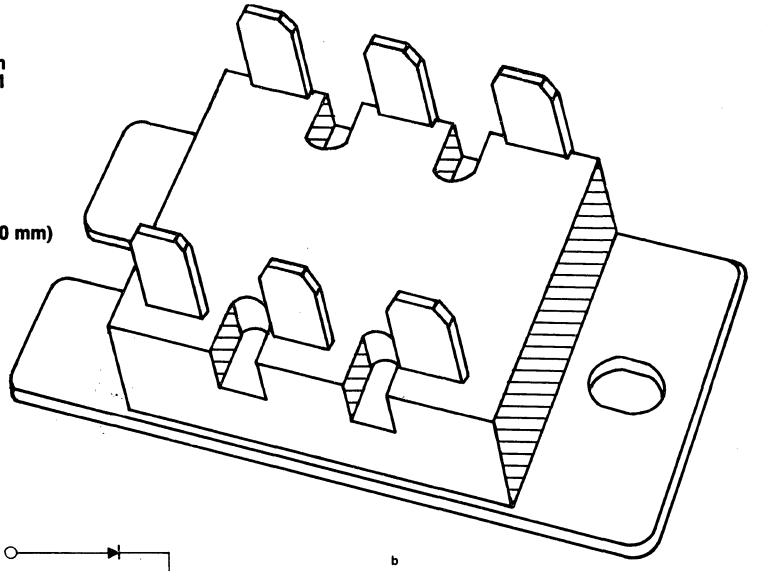

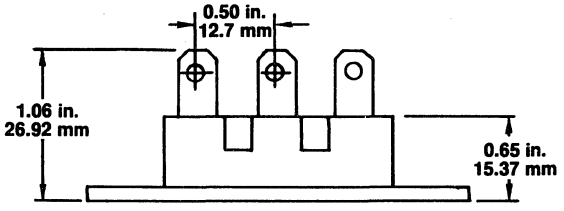

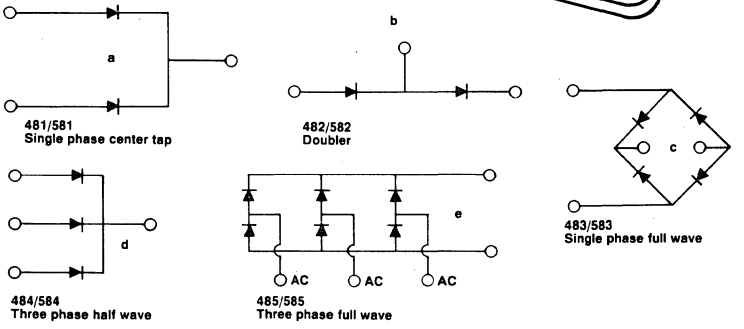

15. OUTLINE DRAWINGS

M1335

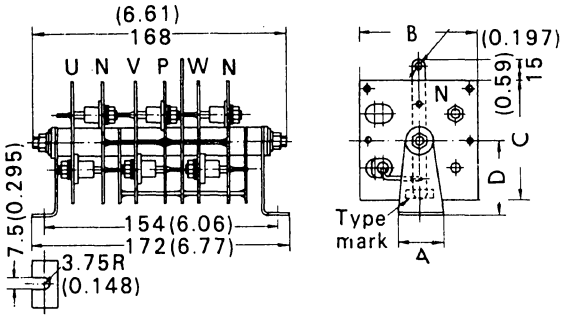

M1338

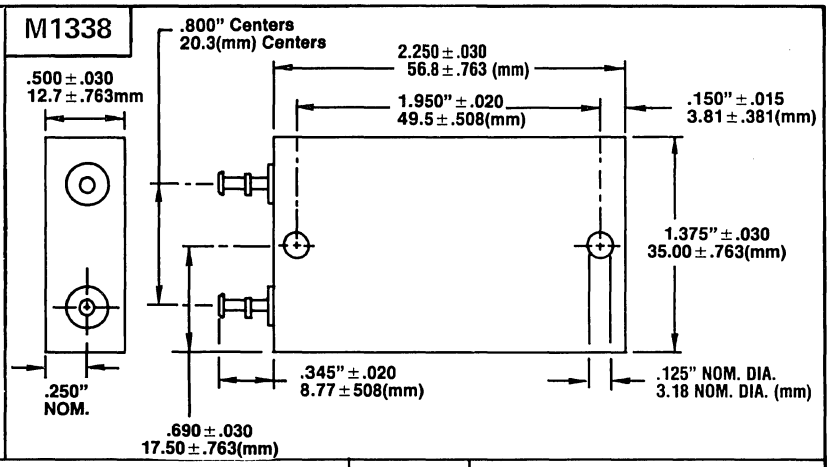

M1336

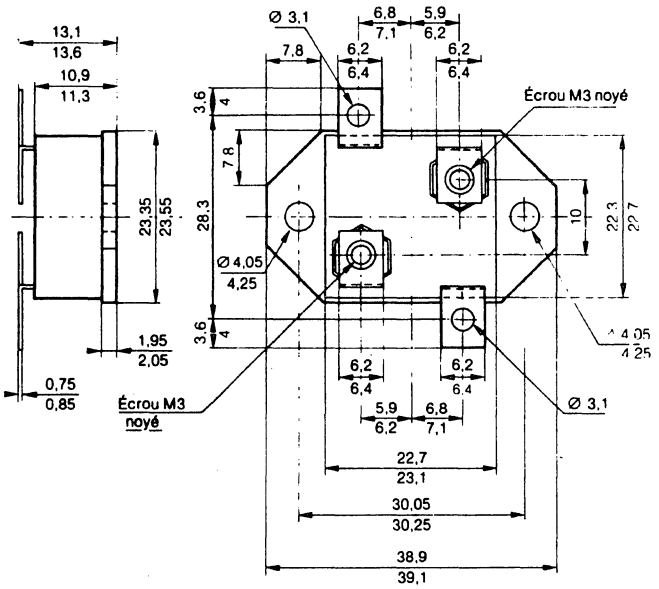

M1339

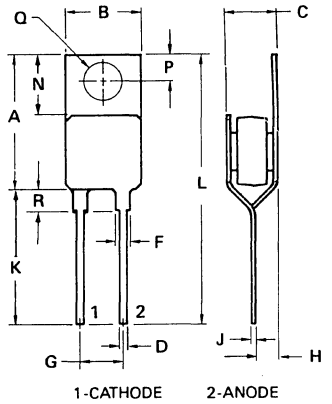

DIM	MILLIMETERS MIN	MILLIMETERS MAX	INCHES MIN	INCHES MAX
A	14.22	15.88	0.560	0.625
B	9.65	10.67	0.380	0.420
C	7.21	7.87	0.284	0.310
D	0.64	1.14	0.025	0.045
F	1.52	2.29	0.060	0.090
G	4.32	5.33	0.170	0.210
H	2.03	2.92	0.080	0.115
J	0.58	0.74	0.023	0.029
K	–	14.27	–	0.562
L	–	30.15	–	1.187
N	5.84	6.86	0.230	0.270
P	2.54	3.05	0.100	0.120
Q	3.53	3.73	0.139	0.147
R	–	5.08	–	0.200

M1337

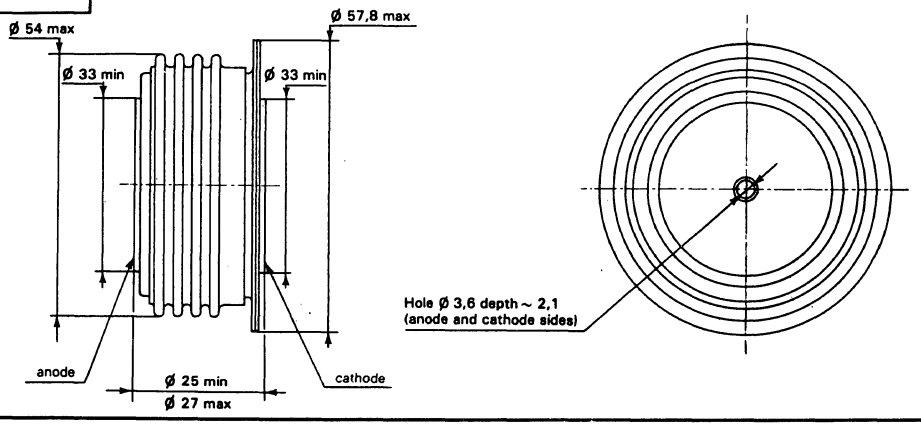

15. OUTLINE DRAWINGS

M1340

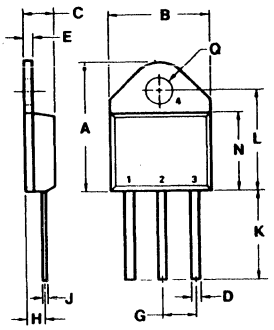

1. ANODE 1
2. CATHODE(S)
3. ANODE 2
4. CATHODE(S)

DIM	MILLIMETERS MIN	MILLIMETERS MAX	INCHES MIN	INCHES MAX
A	20.32	21.08	0.800	0.830
B	15.49	15.90	0.610	0.626
C	4.19	5.08	0.165	0.200
D	1.02	1.65	0.040	0.065
E	1.35	1.65	0.053	0.065
G	5.21	5.72	0.205	0.225
H	2.41	3.20	0.095	0.126
J	0.38	0.64	0.015	0.025
K	12.70	15.49	0.500	0.610
L	15.88	16.51	0.625	0.650
N	12.19	12.70	0.480	0.500
Q	4.04	4.22	0.159	0.166

M1342

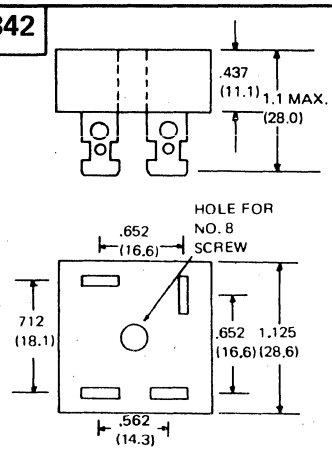

Case: Non conductive epoxy

Marking: Type number & polarity notation marked on side of case

Terminal: 1/4" plated fastons suitable for soldering

M1343

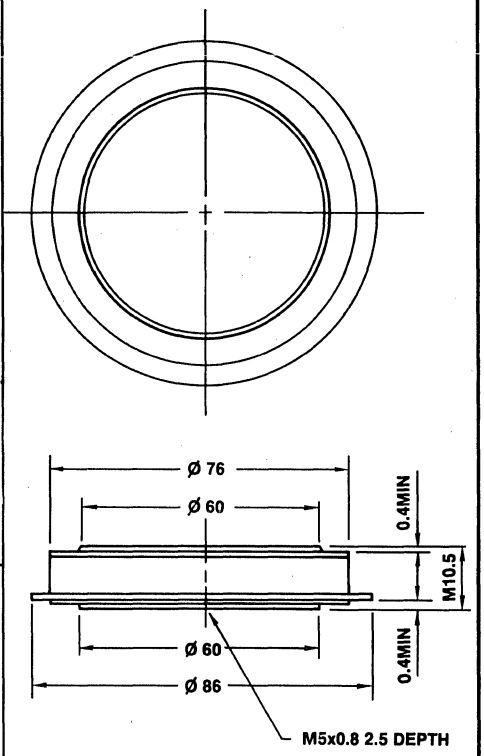

M1346

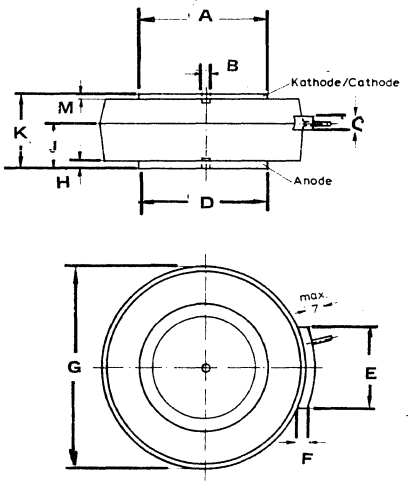

	A	B	C	D	E	F	G	H	J	K	M
M1346	19.6	3.5x1.6	3.5	19.6	19.5	2	41	1.1	8.5	14	1.1
M1346a	28	3.5x1.6	3.5	28	21.5	2	50	1.1	8.5	14	1.1
M1346b	36	3.5x1.6	3.5	36	2.5	2	60	1.1	8.5	14	1.1
M1346c	36	3.5x3.5	5	36	25	4	57	3.5	16	26	3.5
M1346d	48	3.5x3.5	5	.48	30	4	75	3.2	17.5	26	2

M1341

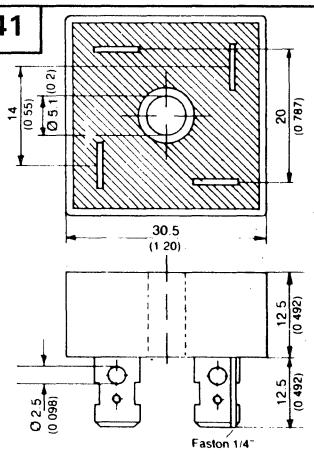

M1345

Dimensions in mm

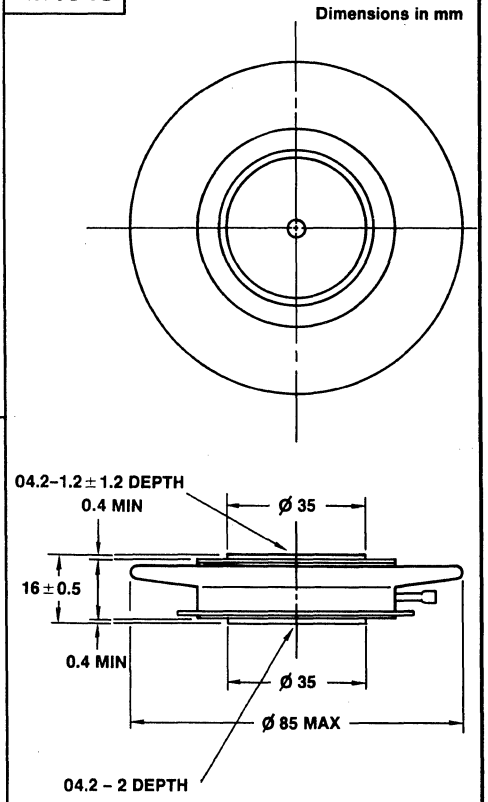

M1344

Dimensions in mm

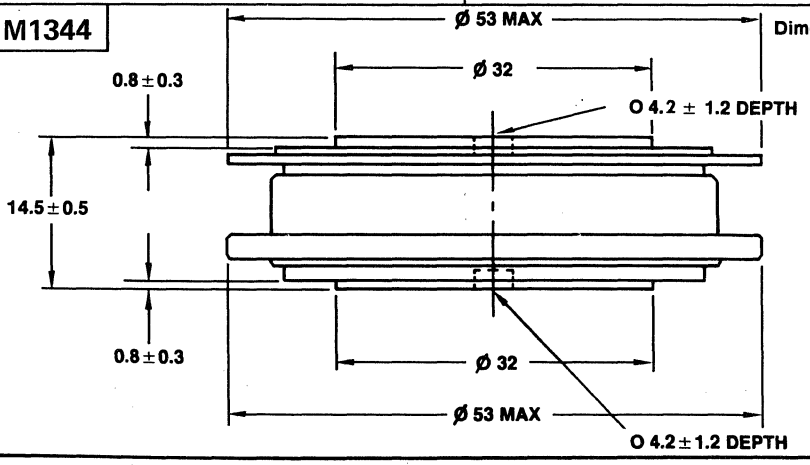

15. OUTLINE DRAWINGS

M1347

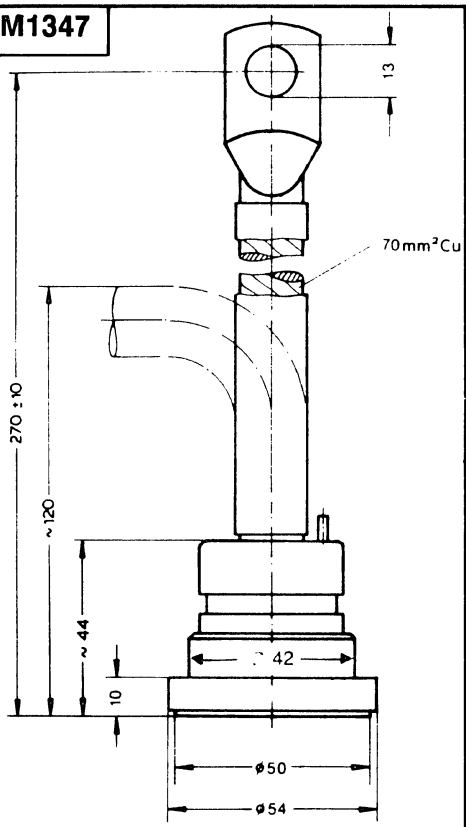

M1348

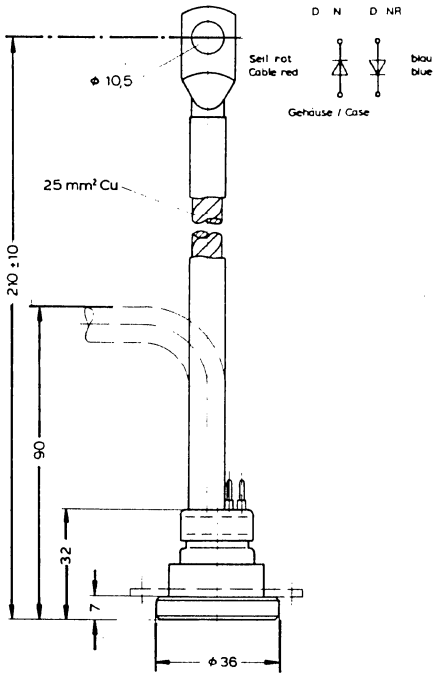

M1349

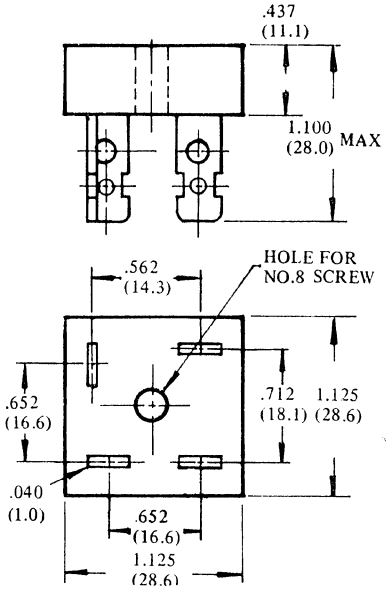

M1350

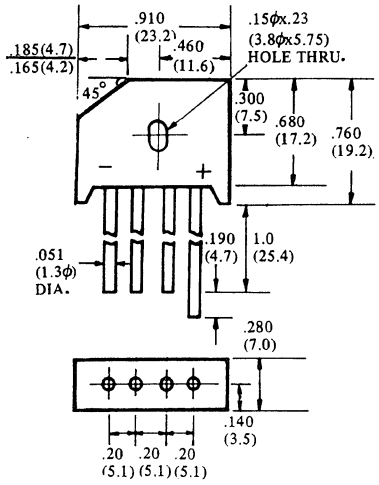

M1351

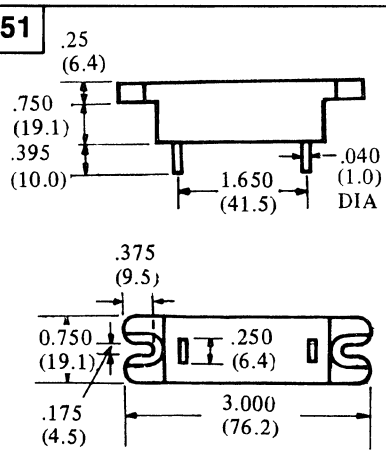

M1352

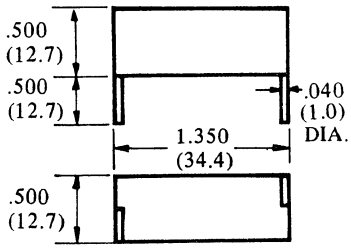

M1353

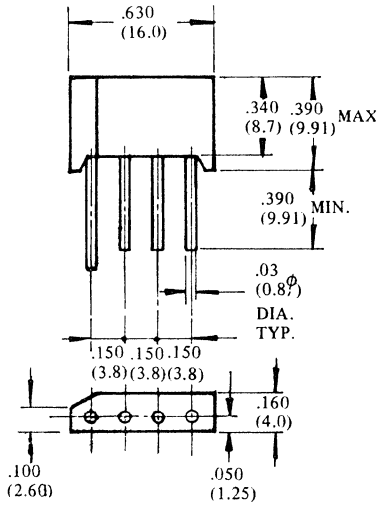

15. OUTLINE DRAWINGS

M1354

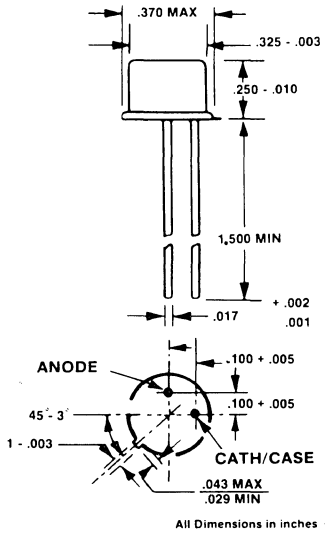

M1354

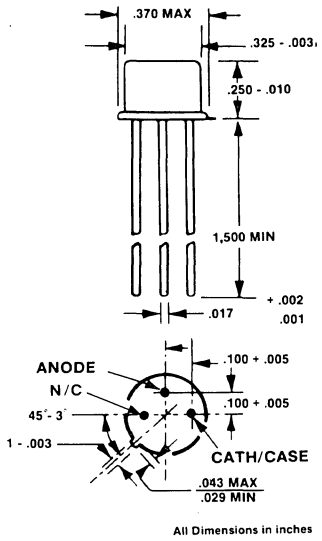

M1354a

M1355

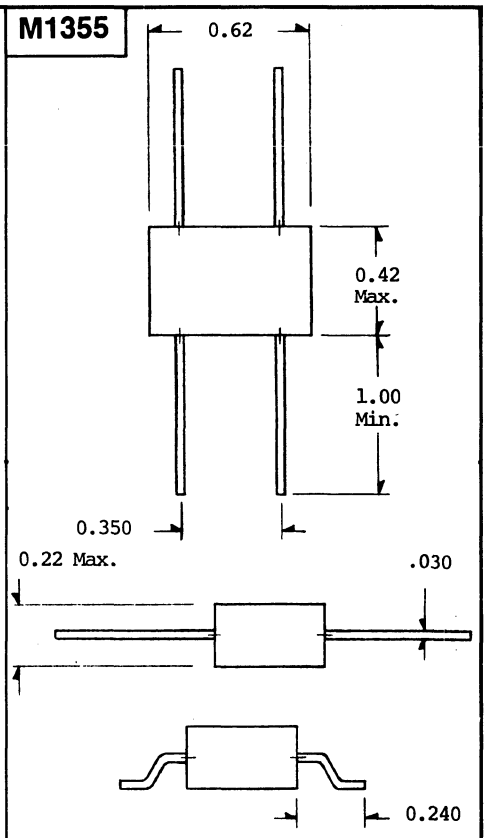

Tolerance XX.03
XXX.020

M1356

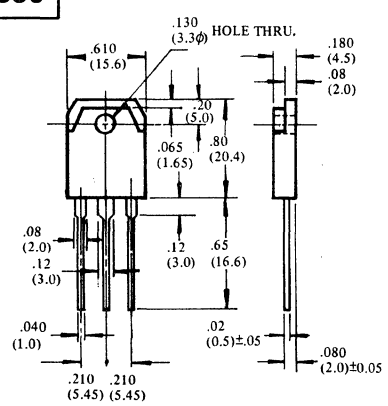

M1357

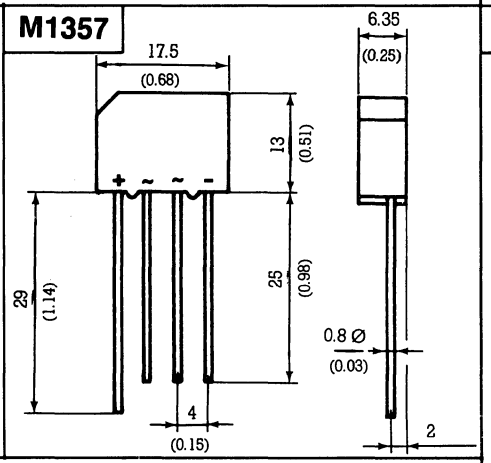

M1358

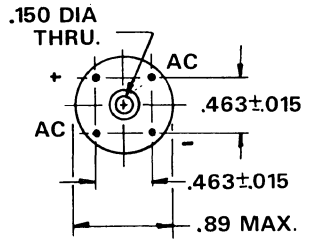

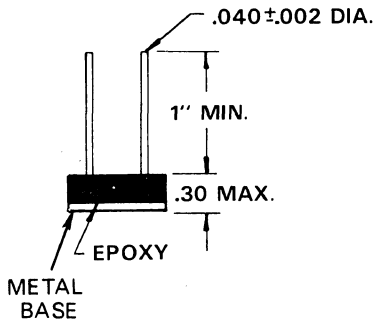

M1359

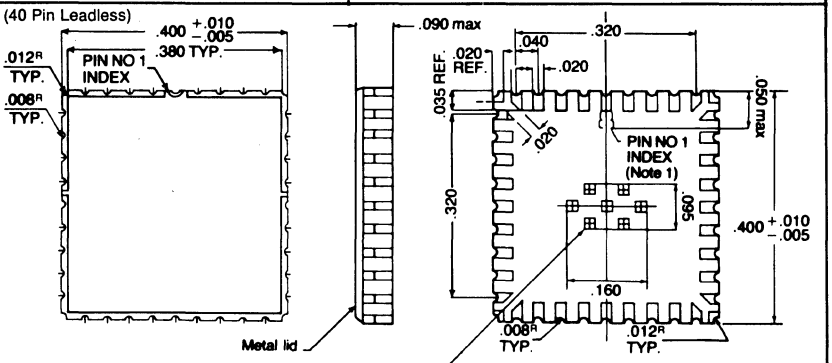

NOTES: To avoid shorts, do not run uninsulated traces under pin 1 index mark or under heat conduction vias.

15. OUTLINE DRAWINGS

M1360

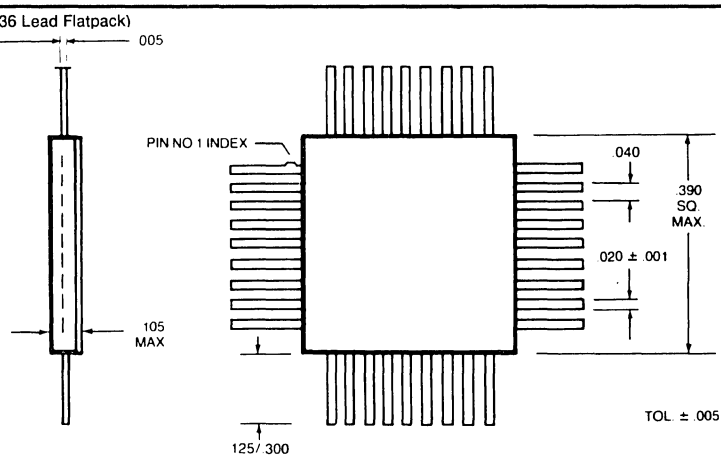

M1361

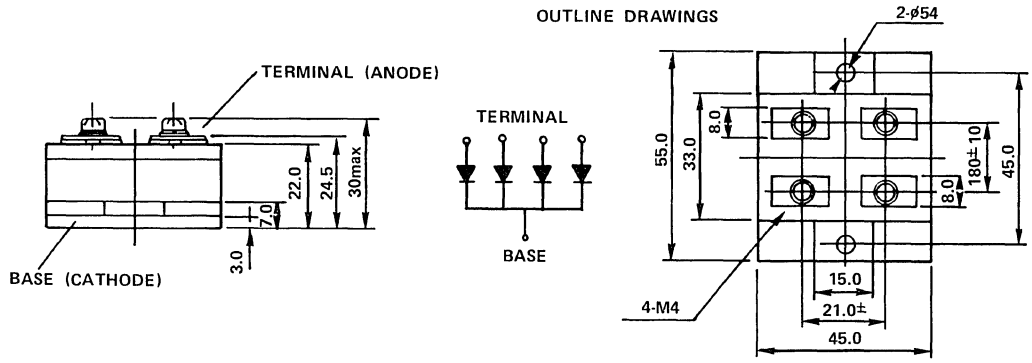

M1362

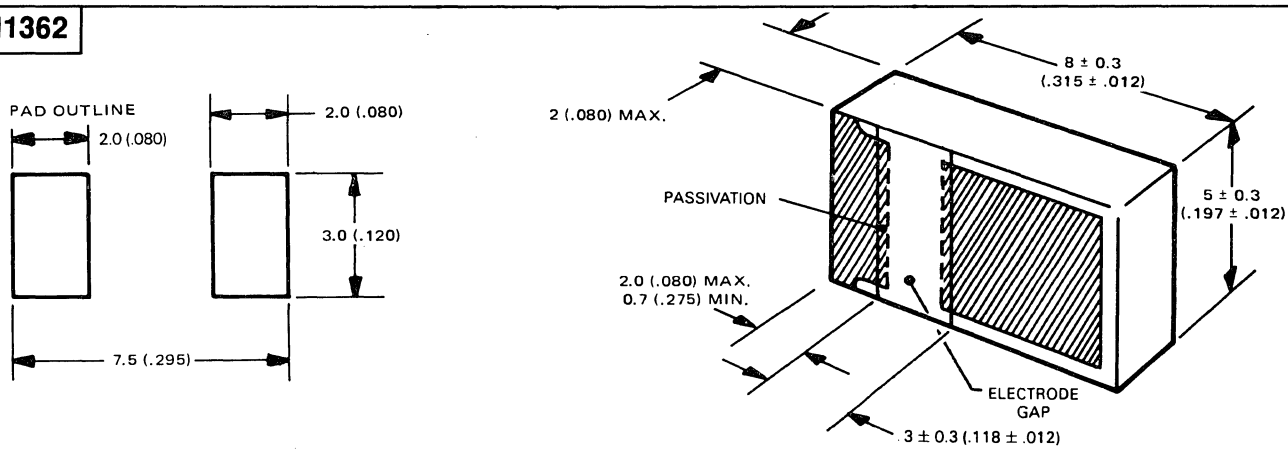

M1363

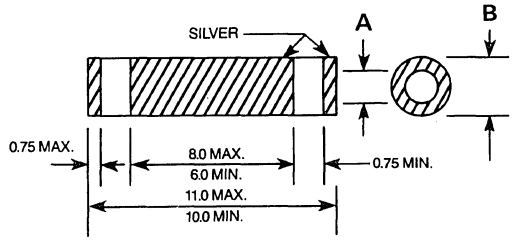

PART SIZE	B MIN.	B MAX.	A MIN.	A MAX.
a	2.08 (.082)	2.26 (.089)	1.09 (.043)	1.25 mm (.049) inch
b	2.08 (.082)	2.26 (.089)	1.63 (.064)	1.83 mm (.072) inch
c	1.73 (.068)	1.88 (.074)	1.09 (.043)	1.25 mm (.049) inch

15. OUTLINE DRAWINGS

M1364

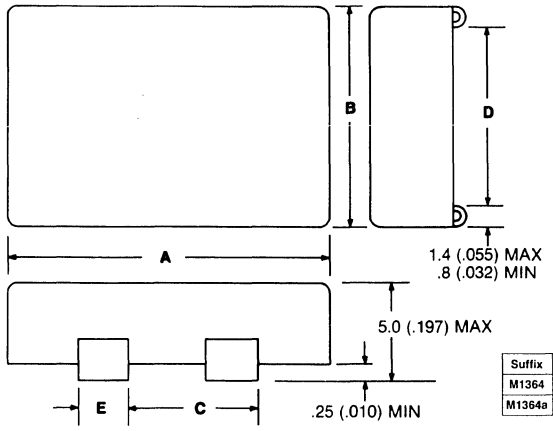

Suffix	A	B	C	D	E
M1364	11.0 max	9.1 max	4.5 5.5	6.3 7.3	1.0 2.0
M1364a	19.0 max	14.3 max	7.0 8.0	11.5 12.5	3.0 4.0

M1365

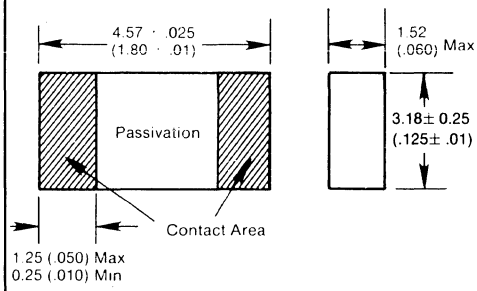

M1366

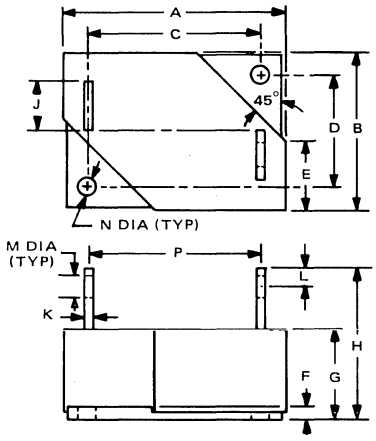

DIMENSION	INCHES
A	2.40 MAX.
B	1.60 MAX.
C	1.75 ± .03
D	1.00 ± .03
E	.65 NOM.
F	.13 NOM.
G	.91 MAX.
H	1.60 MAX.
J	.51 NOM.
K	.06 NOM.
L	.25 NOM.
M	.25 NOM.
N	.21 NOM.
P	1.6 NOM.

M1369

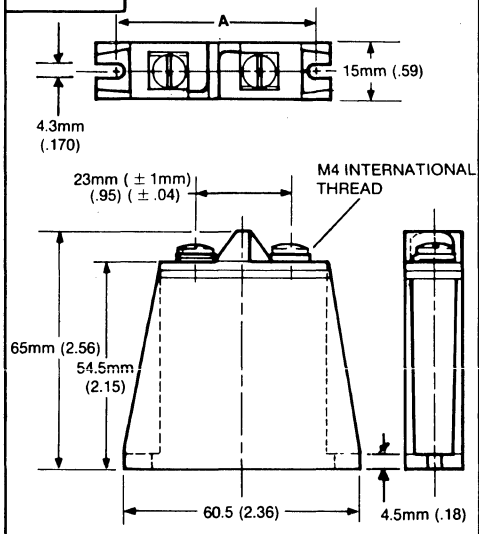

M1367

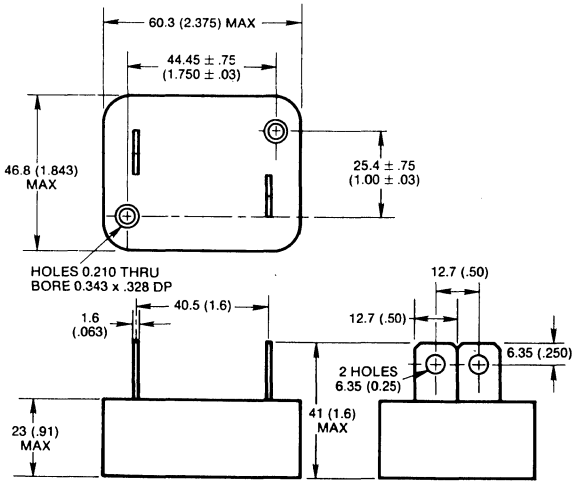

M1368

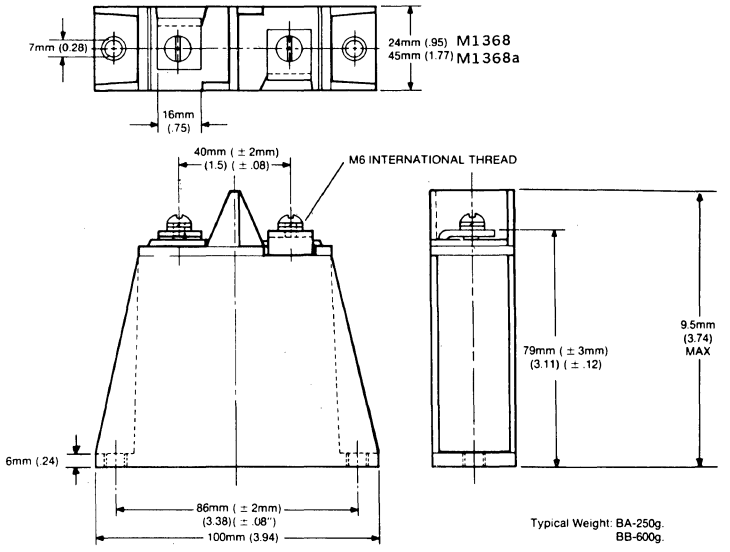

Typical Weight: BA-250g.
BB-600g.

15. OUTLINE DRAWINGS

P3

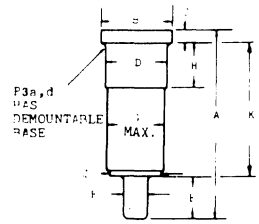

	A	B	C	D	E	F	G	H	J	K
P3	.800 .840	.292 .296	.052	.246 .250	.180 .190	.092 .094	.240	.193 .199	.195 .225	.566 .593
P3a	.800 .840				.175 .195	.092 .094	.240 MAX		.195 .215	
P3b	.810			.250	.200	.095				
P3c	.799 .835	.291 .295	.051 .055	.248 .250	.197 .205	.091 .094				.551 .575
P3d	.800 .840	.292 .296	.047 .057	.243 .250	.180 .190	.092 .094	.222 .240	.193 .199	.195 .215	

P5

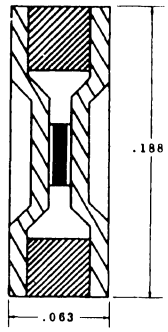

15. OUTLINE DRAWINGS

S4

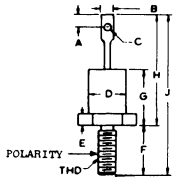

	A	B	C	D	E	F	G	H	J	THD	POLARITY
S4a		.125	.062	.250	.100	.435	.375	.800		10-32	
S4b		.123	.070	.435	.095	.450	.375	.800	1.25	20-32	
S4c		.140	.070	.290	.060	.450	.450	.800	1.25	10-32	
S4d	.093		.078	.375		.437	.420	.650	1.50	10-32	
S4e		.236	.126	.461		.394	.354		.339	5M	
S4f				.276	.157	.433	.394	.787		10-32	
S4g		.140	.060	.290		.437	.450	.800	1.24	10-32	
S4h			.175	.635	.250	.450	1.20			1/4-28	
S4j		.158	.079	.358	.130	.394	.484	.878	1.27	10-32	
S4k		.335	.157	.453	.165	.437	.500	1.00		M6-P1.0	ANODE
S4l		.197	.071	.280	.140	.437	.433	.807		M5-P5.0	CATHODE
S4m			.153	.570	.200	.490	1.04	1.49	.746	1/4-28	
S4n			.175	.635	.120 .250	.434		1.20	1.65	1/4-28	
S4p		.157	.079			.307	.354	.787	1.10	M5	
S4q			.078			.383	.492	.906	1.305		
S4s		.315 MAX	.142 .157	.657 MAX	.157 .189	.425 .465	.472 MAX	1.00 MAX	1.46 MAX		
S4t		.374 MAX	.142 .157	.657 MAX	.122 .150	.425 .465	.500 MAX	1.00 MAX	1.46 MAX	M6x1.0	
S4u			.125			.314	.551	1.14	1.45	M6	
S4v		.157	.098	.354	.177	.433	.401	.708	1.141	10-32UNF2A	ANODE
S4w		.375 MAX	.060 .175	.667 MAX	.115 .200	.422 .453	.450 MAX	1.00 MAX	1.45 MAX	1/4-28UNF2A	ANODE
S4x		.208	.149	.551	.157	.472	.570	1.00	1.47	M6	
S4y		.125	.070	.280 MAX	.115 .200	.422 .453	.470 MAX	.840 MAX	1.29 MAX	1/4-28UNF2A	
S4z		.157 MAX	.062 .078	.421 MAX	.157 MAX	.423 .450	.401 MAX	.799 MAX		M5x.031	CATHODE
S4aa		.118	.055		SW10	.314			1.06	M4	
S4ab		.250 MAX	.060 .095	.255 .424	.075 .175	.422 .453	.300 .405	.600 .800		10-32UNF2A	ANODE CONNECTED TO STUD
S4ac		.250 MAX	.060 .095	.255 .424	.075 .175	.422 .453	.300 .405	.600 .800		10-32UNF2A	CATHODE CONNECTED TO STUD
S4ad		.375 MAX	.175 MAX	.667 MAX	.115 .200	.422 .453	.450 MAX	1.00 MAX		1/4-28UNF2A	CATHODE
S4ae		.248 MAX	.062 .078	.421 MAX	.173 MAX	.425 .440	.401 MAX	.799 MAX	1.224 1.240	M5	
S4af		.126	.055 MIN	.280 MAX		.260 .290	.374 MAX		1.25 MAX	M4	CATHODE
S4ag		.177	.094	.421	.098	.433	.401	.797	1.23	M5x0.8	CHATHODE
S4ah		.354	.149	.657	.137	.433	.500	1.10	1.53	M6x1.0	CATHODE

S8

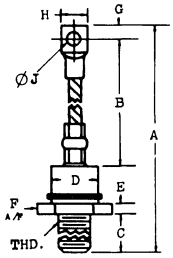

	A	B	C	D	E	F	G	H	ØJ	THREAD
S8	5.53	3.75	.625	.810	.218	1.13	.234	.468	.250	1/2-20 UNF-2A
S8a	5.53	3.75	.800	.810	.187	1.13	.234	.468	.250	3/4-14 NPT
S8b	7.42		.812	1.16		1.25		.625	.343	3/4-16 UNF-2A
S8c	6.42		1.04	1.16		1.25		.625	.343	3/4-14 NPT
S8d	6.19		.812	1.16		1.25		.625	.343	1/2-20 UNF-2A
S8e	4.00		.718			1.13	.250	.531	.281	1-20 NEF-2A
S8f	8.70	6.25	1.07	1.15	.344	1.67	.500	.800	.540	3/4-16 UNF-2A
S8g	5.88 5.50		.656 .594	1.00	.249 .187			.500 .437	.296 .265	1/2-20 UNF-2A
S8h	5.38	3.50	.825	.905	.505	1.06	.310	.550	.280	3/4-14 NPT
S8j	6.63	4.84	.590		.216		.335	.590	.335	M10
S8k	6.65	4.79	.590		.275		.335	.590	.335	16 X 1.5
S8m	7.04 MAX	5.28 MAX	.689 .728		.205 .236	.102 .106		.650 MAX	.307 .331	M12X1.5
S8n	7.48 MAX	5.20 MAX	.795 .180		.250 .268	.125 .126		.886	.327 .350	M20X1.5
S8p	12.6 MAX	9.4 MAX	1.10	1.65 MAX	.472	1.97	.630	1.10	.492 .532	M30X2.0
S8q	4.30 4.80		.605 .645			1.031 1.062		.650 MAX	.250 .310	3/8-24 UNF-2A MOD.
S8r	6.65		.590		.275			.472	.240	1/2 20UNF-2A
S8s	6.42		1.04	1.16		1.25		.625	.343	3/4-14NPT
S8t	6.19		.812	1.16		1.25		.625	.343	1/2-20 UNF-2A

S11

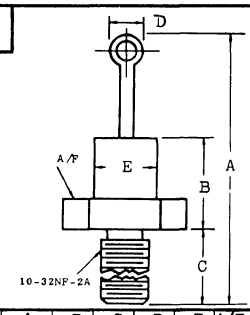

	A	B	C	D	E	A/F
S11	1.27	.420	.640	.125	.250	.445
S11a	1.25	.375	.495	.125	.435	.445
S11b	1.34	.433	.433		.275	.472
S11c	1.22	.394	.354	.138	.275	.437
S11d	1.13	.375	.453	.140	.275	7/16 HEX
S11e	1.25	.406	.438	.125	.270	.438
S11f	1.344	.344	.344	.219	.500	.500

S12

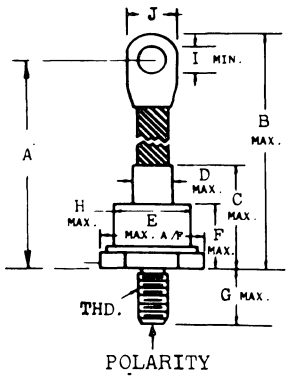

	A	B	C	D	E	F	G	H	I	J	THD	POLARITY
S12		4.75	1.25	.500	1.06	.375	.687	.900	.250	.570	3/8-24	
S12a	9.25		3.22		1.61		.492		.450	1.06	M24x.59	ANODE
S12b	8.28		3.54		1.68		.787	1.58	.402	.965	M24-PL.5	CATHODE
S12c	.460	.485	1.26		.67	.709	.493	.591	.260	.504	M8x1.25	
S12d	9.84		3.07	.629	1.97	2.05	.984	1.89	.492	1.06	M30x2	CATHODE
S12e	2.83	3.03	1.56		.688	.450	.422		.165	.394	M6	ANODE
S12f		6.25	1.61		1.06	1.02	.690		.268	.610	M12-P15	ANODE
S12g		7.09	2.05		1.38	1.22	.984	1.10	.335		M20-P1.5	ANODE
S12h	1.06		4.72				.945		.512	1.44	M30-P20	ANODE
S12j		6.18					.590		.255	.551	M12	
S12k		7.00	1 1/16						9/32		1/2-20 UNF-2A	ANODE
S12m		7.93	2.12		1.25		.812		.406		.750-16 UNF-2A	
S12n	6.69 7.48						.944 1.02		.330	.944	M20-P1.5	
S12p	9.25		3.22		1.61		.492		.450	1.06	M24x.59	CATHODE
S12q	9.05		2.44				.786		.413		M24x.059	
S12r	5.98	6.41	2.83	1.24	1.20	1.18	.807	1.26 MAX	.338	.885	M20x1.5	ANODE
S12s	10.60	11.0	4.72	.787	1.33	1.77	.985	1.77	.511	1.29	M24x1.5	ANODE

S14

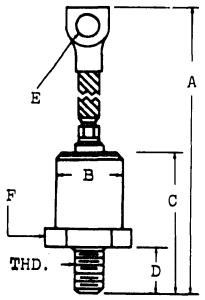

	A	B	C	D	E	F	THD
S14b	5.28	.875	1.88	.625	.281	1.00	3/8-24UNF
S14c	5.69	1.09	2.69	.821	.281	1.25	1/2-20UNF
S14d	5.69	1.09	2.69	.812	.281	1.25	3/4-16UNF
S14e	6.75	1.09	2.94	.812	.343	1.25	3/4-16UNF
S14f	5.94	1.09	2.69	.812	.343	1.25	3/4-16UNF
S14g	5.75	1.09		.875	.281		3/4-14NPT
S14h	6.00	1.09		.875	.343		3/4-16NPT
S14j	5.94	1.09		.813	.344		3/4-16UNF-2A
S14k	3.62	.669	.944	.433	.137	1.25	1/4-28UNF
S14m	5.62	1.00	1.68	.656	.296	1.156	3/8-24UNF
S14p	6.32	1.09	2.94	.812	.281	1.25	3/4-16UNF
S14q	5.94	1.09	2.69	.812	.343	1.25	1/2-20UNF
S14r	1.062		.719	.275	.059		M5
S14s	1.47	.527 .532	.890 .900	.433	.145 .157	.551	M6x1.0
S14t	1.606 MAX	.600	.921 MAX	.433	.165	.670	M6x1.0

S16

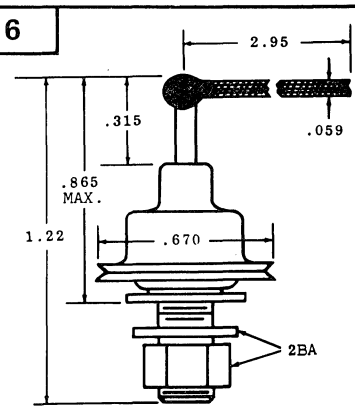

15. OUTLINE DRAWINGS

S19

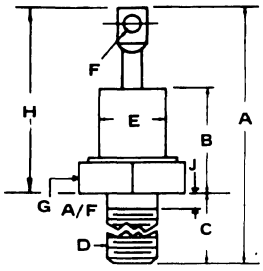

	A	B	C	D	E	F	G	H	J
S19	1.20	.394	.437	10-32NF-2A	.270	.070	.437		
S19a		.375	.437	10-32NF-2A	.280	.065	.434	.800	
S19b	1.32	.886	.433	M5 PO. 9		.071		.886	
S19c	1.26	.453	.433	M5	.362	.091	.550	.827	
S19d	1.61	.563	.473	M6	.571	.150	.750	1.14	
S19e	1.44	.500	.435	1/4-28	.425	.140	.563	1.00	
S19f	1.56		.437	10-32 THD.		.125	.437	1.13	
S19g	1.30	.401	.431	M5	.421	.062		.828	
S19h	1.16	.397	.450	10-32 THD.	.255	.072	.434	.710	
S19j	1.16	.405	.450	10-32 THD.	.270	.080	.434	.710	
S19k	1.22	.393	.434	M5		.094	.473	.787	
S19m	1.14	.394	.437		.276	.071	.433	.708	
S19n	1.45	.472	.457	M6	.520	.156	.669	1.00	
S19p	1.25	.452	.433	M6	.393	.165		1.00	
S19q	1.25 MAX		.453 MAX	10-32 UNF-2A	.290 MAX	.160 MAX	.437 MAX	.800 MAX	
S19r	1.18		.433	M5			.433	.629	
S19s	1.249	.401	.423 .450	M5	.421	.062 .078	.433	.799	
S19t	1.18	.393	.433	M5	.275	.070	.433	.748	
S19u		.460	.444	.25-28UNF-2A	.511	.137	.669		
S19v		.570	.472	M6x.039	.551	.149	.771	1.00	.070
S19w	1.23 MAX	.405 MAX	.438	10-32NF-2A	.281 MAX	.060		.800 MAX	NA
S19x	1.77 1.81	.590	.433 .512	M6x.039	.649	.149	.149	1.29	.082
S19y	1.250 MAX	.405 MAX	.425 .450	10-32NF-2A	.275 MAX	.060 MIN	.429 .434	.800 MAX	
S19z	1.425 1.440	.499 MAX	.425 .440	M6	.665 MAX	.141 .157	.196 MAX	.999 MAX	.086 MAX
S19aa	1.498 MAX	.511 MAX	.433	M6x1		.137 MIN	.669	1.062 MAX	.086 MAX
S19ab	1.230 1.257	.401 MAX	.423 .450	M5x0.8	.421 MAX	.062 .078	.433	.807 MAX	.078 MAX
S19ac	1.416 1.455	.472 MAX	.417 .456	M6	.480 .519	.147 .155	.669	.999 MAX	.078 MAX
S19ad		.345 .385	.402 .453	10-32UNF-2A	.330 .350	.060 MIN	.423 .437	.665 .715	.078 MAX

	A	B	C	D	E	F	G	H
S19ae	1.417	.433	.472	M6		.129	.551	.944
S19af	1.255	.405	.452	UNF-2A	.425	.094	.433	.803
S19ag	1.535	.472	.551	M8		.165	.669	.984
S19ah	1.397	.421	.452	UNF-2A	.610	.157	.669	.944

S21

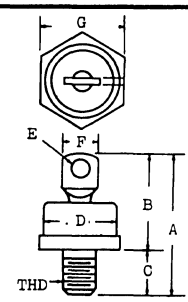

	A	B	C	D	E	F	G	THD
S21	1.219	.782	.437	.625	.140	.280	.688	1/4-28 UNF-2A
S21a	1.250	.812	.437	.625	.140	.312	.687	1/4-28 UNF-2A
S21b	1.610	.940	.440	.630	.145		.687	1/4-28 UNF-2A
S21c	1.460	.950	.450	.510	.166		.687	1/4-28 UNF-2A
S21d	1.460	1.00	.456	.433	.148	.314	.668	1/4-28 UNF-2A
S21e	1.634	1.20	.434	.635	.145	.688		1/4-28 UNF-2A
S21f	1.650	1.20	.450	.635	.172	.322	.688	1/4-28 UNF-2A
S21g	1.396	1.02	.375		.098		.670	M8
S21h	1.322	.900	.422	.500	.140	.225	.667	1/4-28 UNF-2
	1.412	.960	.452	.515	.150	.260	.685	

S23

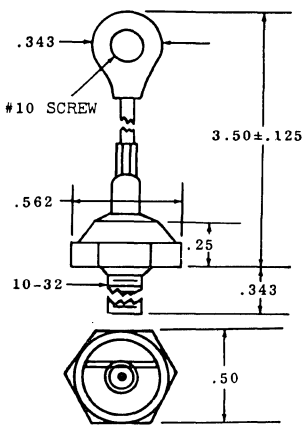

S20

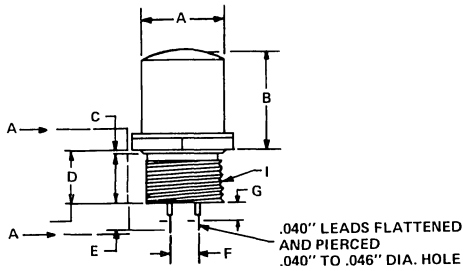

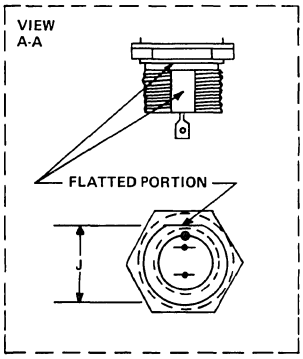

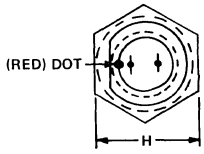

A (CONTRASTING) COLORED DOT SHALL BE PERMANENTLY MARKED ON THE DEVICE SO THAT THE TERMINAL ADJACENT TO THE COLORED DOT WILL BE DISTINGUISHED AS THE POSITIVE TERMINAL (WITH RESPECT TO THE OTHER TERMINAL) FOR DIRECTIVITY OF CURRENT FLOW THROUGH THE SEMICONDUCTOR DIODE.

	A	B	C	D	E	F	G	H	I	J
S20	.622 .628	.719 .764	.040 .045	.375	.187	.180 .240	.140	.750	5/8-18NF-2A	.495 .505
S20a	.622 .628	.719 .764	.020 .025	.375	.187	.180 .240	.140	.750	5/8-18NF-2A	.495 .505

S24

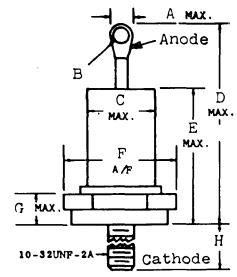

	A	B	C	D	E	F	G	H
S24	.125	.065	.310	.970	.670	.437	.145	.437
S24a	.250	.060 MIN	.424	.800	.405	.430	.175	.437
S24b	Reverse polarity of a version							
S24c	.125	.065	.280	.800	.375	.437	.110	.437
S24d	Reverse polarity of S24							

S25

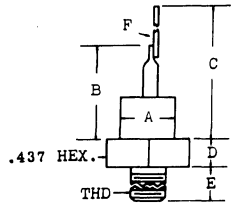

	A	B	C	D	E	F	THD	HEX
S25	.281	.562	1.937	.125	.437	.032	.190-32	.437
S25a	.250	.813	1.813	.125	.437	.032	10-32NF-2A	.437
S25b	.425	.756	1.821	.075 .175	.422 .453	.026 .035	10-32NF-2A	.437
S25c	.255	.583	1.915	.125	.433	.031	M5	.500

15. OUTLINE DRAWINGS

S26

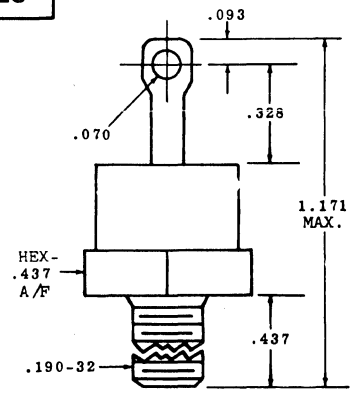

S27

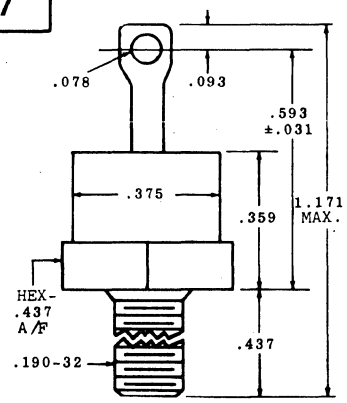

S29

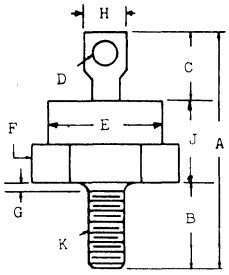

	A	B	C	D	E	F	G	H	J	K
S29	1.281	.437	.375	.140		.687A/F	.062		.450	1/4-28
S29a	1.453 MAX	.453 MAX	.220 MIN	.145	.667 MAX	.687A/F	.0625	.375 MAX	.450 MAX	1/4-28
S29b	1.452 MAX	.422 .452		.150 .161	.602 MAX		.086 MAX	.236 .374	.449 MAX	M6
S29c	1.411 1.430	.427 .446	.512 MAX		.531 MAX	.685A/F	.062 MAX		.472 MAX	1/4-28 UNF
S29d	1.16	.433	.429	.070	.400	.472	.078	.118	.401	M5x0.8
S29e	1.29	.437	.429	.094	.400	.472	.078	.157	.425	M5x0.8

S31

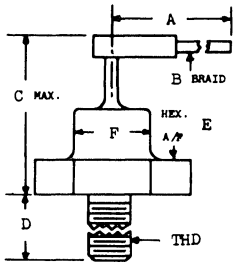

	A	B	C	D	E	F	THD
S31	3.00	.062	.660	.344 .406	.600		2BA
S31a	2.95	.059	.800	.421 .453	.425 .437	.366	10-32UNF2A

S33

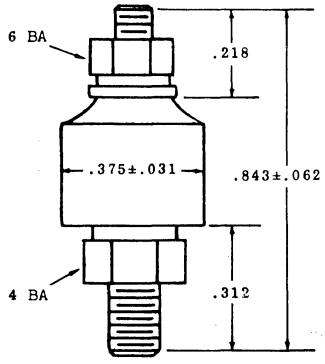

S35

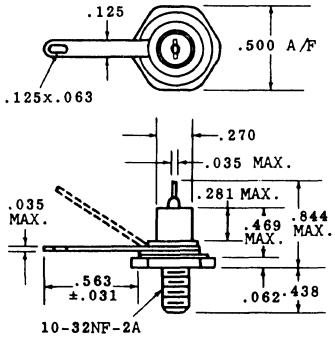

S41

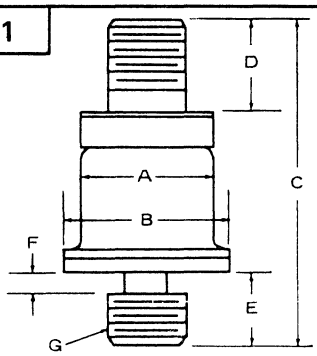

	A	B	C	D	E	F	G
S41a	.406	.500	.980	.281	.219	.063	1/4-20UNC
S41b	.281	.375	.980	.281	.219	.063	1/4-20UNC
S41c	.274 .281	.370 .380	.921 .984	.276 .286	.203 .233	.052 .072	1/4-20NC-2

S42

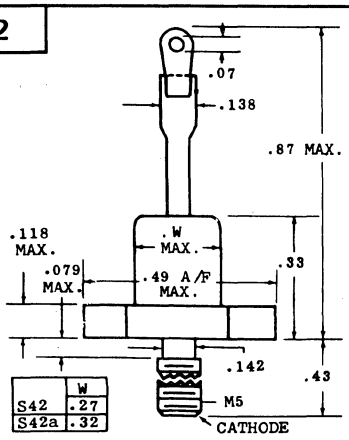

	W
S42	.27
S42a	.32

S43

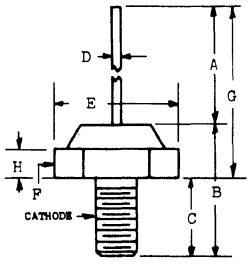

	A	B	C	D	E	F	G	H	THD
S43	1.50 MIN	.531 .655	.344	.051	.563	.50 A1F			10-32
S43a			.240 MAX	.023		.216 .500	.984 MIN	.157	M3

15. OUTLINE DRAWINGS

S48

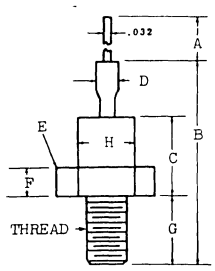

	A	B	C	D	E	F	G	H	THD.
S48	1.251	.13	.453	.094	.438	.250	.438	.250	10-32NF-2A

S52

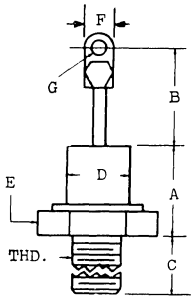

	A	B	C	D	E	F	G	THD
S52	.390	.400	.440	.247	.429 HEX		.093	10/32 NF-2A
S52a	.630	.630	.316	.512	.67 A/F	.343	.202	M8
S52b	.256	.394	.433	.335	.472 HEX	.134	.094	
S52c	.590		.433	.488	.433	.244	.125	M8
S52d	.384	.398	.422	.488		.263	.151	1/4-28UNF 2A
	.435	.421	.435	.492		.273	.161	

S61

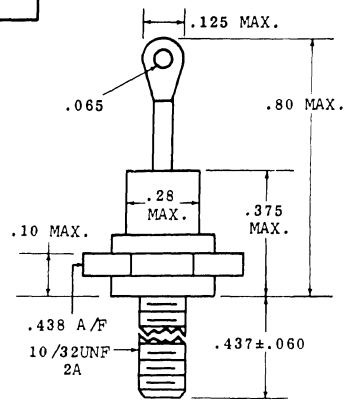

S65

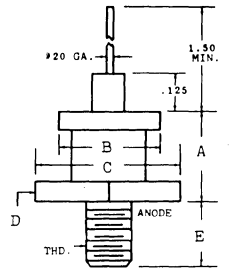

	A	B	C	D	E	THD
S65	.438	.375	.500	.438	.344	10-32
S65a	.406	.312	.344	.312	.375	6-32

S66

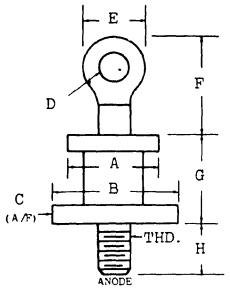

	A	B	C	D	E	F	G	H	THD
S66	.375	.500	.438	.109	.219	.375	.438	.344	10-32
S66a	.500	.563	.500	.109	.219	.375	.438	.344	10-32
S66b	.312	.343	.312	.156	.125	.438	.406	.375	6-32
S66c	.438	.562	.500	.156	.125	.438	.406	.375	10-32

S67

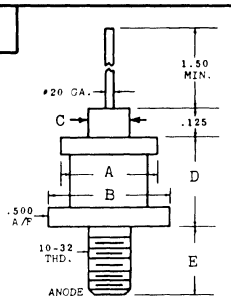

	A	B	C	D	E
S67	.500	.563		.438	.344
S67a	.437	.562	.080	.406	.375

S68

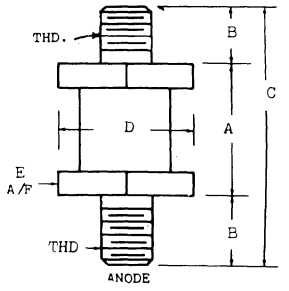

	A	B	C	D	E	THD
S68	.781	.469	1.688	.844	.705	5/16-24
S68a	.496	.344	1.156	.563	.500	10-32-2A
S68b	.406	.375	1.156	.344	.312	6-32-2A
S68c	.406	.375	1.156	.562	.500	10-32-2A
S68d	.781	.437	1.656	.843	.750	5/16-24

S72

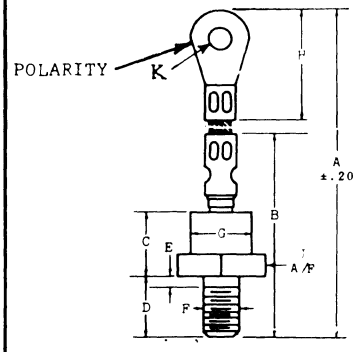

	A	B	C	D	E	F	G	H	J	K	POLARITY
S72	6.78	2.36	.770	.730	.100	M12		1.32	1.06		ANODE
S72a	6.50	2.20	.750	.630	.100	M8		1.00	1.06		ANODE
S72b	6.90	2.46	.830	.750	.140	M12	.750	1.30	1.06		ANODE
S72c	5.30	1.83	.590	.530	.080	M8	.460	.940	.670		ANODE
S72d	5.30	1.83	.590	.530	.080	M8	.460	.940	.670		CATHODE
S72e	6.90	2.46	.830	.750	.140	M12	.730	1.30	1.06		CATHODE
S72f	9.45	3.23	1.69	.790		M24		2.12	1.50	.310	ANODE
S72g	7.80	3.15	1.69	.710		M16		1.73	1.30	.310	ANODE
S72h	7.10	2.04	1.25	.990		M12		1.38	.340		
S72j	7.61	1.38	.830	.710	.140	M12	.730		1.10	.340	ANODE
S72k	7.61	1.38	.830	.710	.140	M12	.730		1.10	.340	CATHODE
S72l	9.45	3.31	1.77	.790		M24		2.13	1.50	.315	CATHODE
S72m		2.36	.945	.551		M12	.866		1.06	.327	ANODE
S72n	4.82	1.78	.708	.452	.086	M8x	.590		.669	.248	ANODE
	5.29	MAX	MAX	.531	MAX	1.25	MAX			.271	

S81

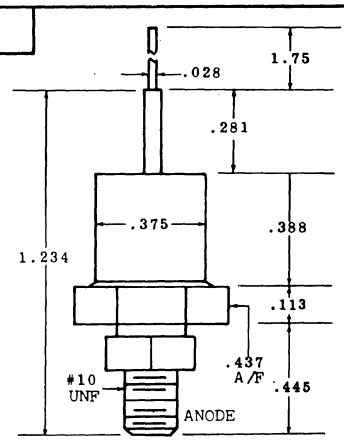

15. OUTLINE DRAWINGS

S82

	A	B	C	D	E	F	G	H
S82	.182	.265 MAX	.120 MAX	.320 MAX	.067 MAX	.315 MAX	.066 MAX	.266 MAX
S82a		.250	.125		.062	.290	.065 .080	.250
S82b		.234 .265	.165 MAX	.281 .328	.057 .067	.285 .313		.234 .265

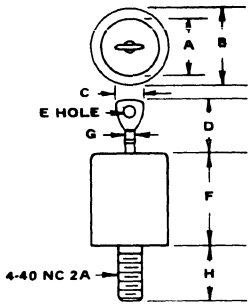

S83

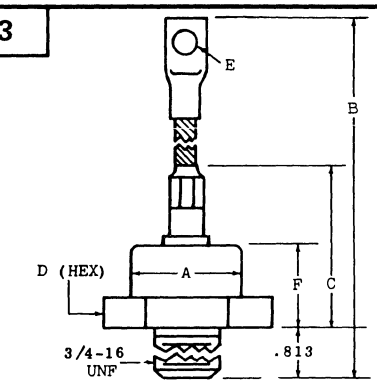

	A	B	C	D	E	F
S83	1.25	5.937	1.875	1.625	.344	1.06
S83a	1.75	6.938	2.594	2.250	.531	1.66
S83b	1.25	6.937	1.875	1.625	.344	1.06

S87

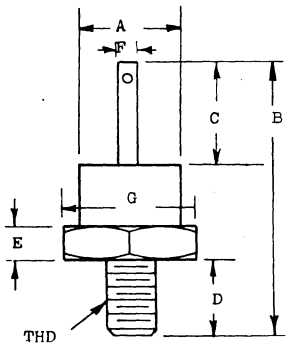

	A	B	C	D	E	F	G	THD
S87	.314	1.13	.461	.276	.138			M4
S87a	1.2	2.25	1.18	.50	.125	.525	1.25	10-32
S87b	1.72	2.9	.90	1.00	.375	.760	1.75	3/4-16UNF
S87c	1.94	3.50	1.4	1.00	.375	1.10	2.0	3/4-16UNF
S87d	2.20	3.72	1.62	1.00	.375	1.10	2.25	3/4-16UNF
S87e	.314	1.13	.40	.314	.112	.08	.392	M5
S87f	1.20 MAX	1.96 2.40	.835 1.04	.593 .657	.115 .135	.500 .525	1.23 1.26	3/8-24-UNF-2A
S87g	.314	1.141	.393	.314	.141		SW11	M5
S87h	.314	1.141	.393	.342	.122		SW11	M5
S87j	.275 MAX	1.212 1.227	.394 MAX	.425 .440	.157 MAX		.503	10-32 UNF2A

S88

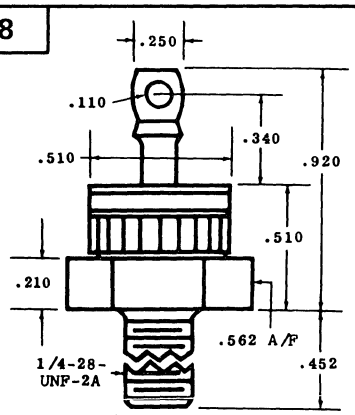

ALL DIMENSIONS MAXIMUM

S96

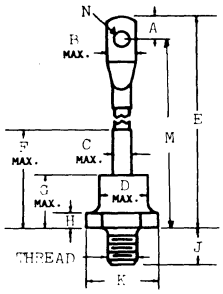

	A	B	C	D	E	F	G	H	J	K	M	N	THREAD
S96	.40	.510	.335	.900	5.90	1.84	.950	.300	.630	1.37			
S96a		.687	.500	1.00	5.56	2.13	1.50	.500	.836	1.25			3/4-16-UNF-2A
S96b						1.52	.866		.472		6.77	.251	M10
S96c	.315	.472		.629	5.315	.984		.177	.472	.767	5.000	.204	M8
S96d	.275	.551		.905	6.141	1.417		.255	.708	1.102	5.866	.334	M12
S96e	.275	.551		1.020	6.141	1.417		.255	.787	1.200	5.866	.334	M12
S96f	.275	.551		1.020	6.141	1.417		.255	.708	1.200	5.866	.334	M12
S96g	.275	.551		1.020	6.141	1.417			.787	1.220	5.866	.334	M12
S96h	.276	.787		1.330	7.362	1.929		.314	.905	1.574	7.086	.334	M18
S96j	.263	.944		1.614	8.700	2.677		.374	1.063	1.889	8.437	.413	M18

S102

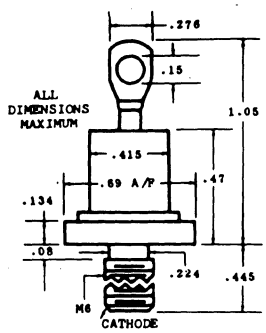

S102a SAME AS S102 EXCEPT STUD IS ANODE

S103

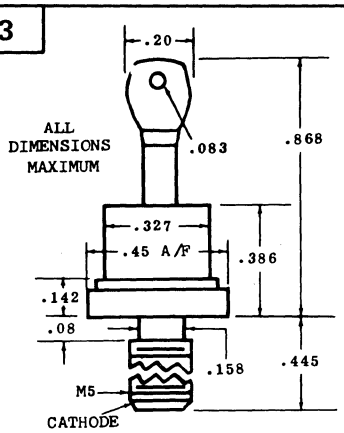

S112

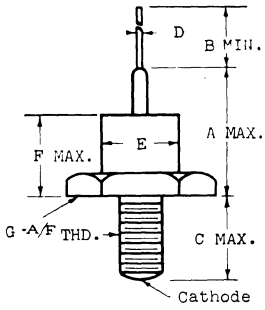

	A	B	C	D	E	F	G	THD
S112	.690	1.38	.314	.024	.335	.354		M5
S112a	.905	1.37	.393	.031	.255	.433		M5
S112b	.555	1.36	.315	.032		.354	.433	M5
S112c	.787	1.38	.374	.034	.268	.354		M5

15. OUTLINE DRAWINGS

S117

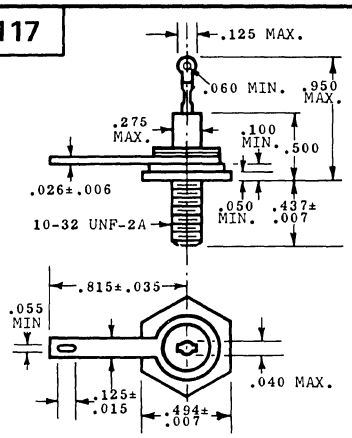

S120

	A	B	C	D	E	F	G	H	J	K	L	THD
S120	6.13	2.25	1.38	1.38	.813	.406	1.00	.688	.313	#3		1/2-20UNF
S120a	6.51	2.01	1.34	1.26	.787	.433	1.02	.630	.330		.394	3/4-16UNF
S120b	6.56	2.25	1.34	1.25	.812	.270	1.00	.710	.328			3/4-16UNF
S120c	6.71	2.12	1.38	1.26	.790	.374	1.01	.710	.354		.520	3/4-16UNF
S120d	9.02	2.76	1.85	1.97	.985	.590	1.66	.906	.414		.630	M24
S120e	9.09	2.48	1.73	1.50	.787			.886				M24
S120f	2.24	1.42	1.26	.807	.453	1.02	.669	.331			.433	3/4-16UNF-2A
S120g	10.2 MAX	3.00 MAX	1.64 MAX	1.69 MAX	1.09 MAX	.446 MAX	1.47 MAX	.990 MAX	.421 MAX			3/4-16UNF-2A
S120h	6.75	2.25	1.41		.807	.452	1.02	.669	.330		.433	3/4-16UNF-2A
S120j	4.750 5.150	1.570 1.750	1.020 1.140	1.052 1.063	.610 .640	.390 .500	.840 .910	.520 .625				3/8-24UNF-2A

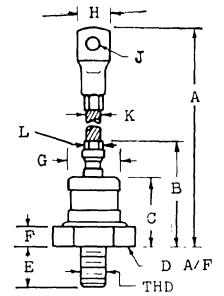

S122

	C	E	F	G	H	J
S122	4.40	.951	3/8-24	.590	1.00	1.125
S122a	4.00	.731	1/4-28	.437	.638	.688
S122b	4.55	.702	1/4-28	.437		

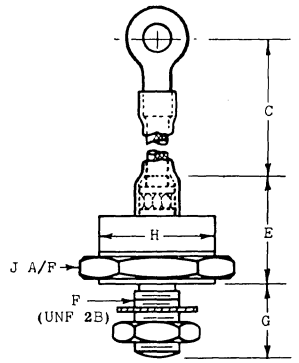

S125

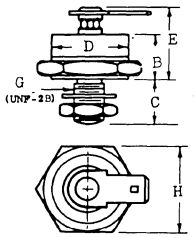

	B	C	D	E	G	H
S125	.556	.590	1.00	.870	3/8-24	1.125
S125a	.424	.437	.638	.702	1/4-28	.688
S125b	.533	.437	.551	.850	1/4-28	.688
S125c	.475± .015	.50± .020	.565± .005	.775± .018	1/2-20 2A	.867± .005
S125d	.580	.520	.570	.800	1/4-28 -2A	.866

S128

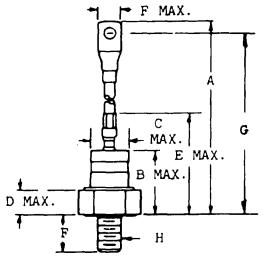

	A	B	C	D	E	F	G	H	POLARITY
S128	5.0	1.063	.625	.406	1.688	.375		M12x1.75	
S128a		1.12	.89	.35	1.75	.109 MAX	6.3	3/8-24	
S128b	.312 .562	.812	.795	.218	1.50	.625		3/8-24	SEE NOTE

NOTE: TYPE NUMBER SUFFIX
N– INDICATES ANODE CONNECTED TO STUD
P– INDICATES CATHODE CONNECTED TO STUD

S132

S132a SAME AS S132 EXCEPT LESS GATE CONNECTOR

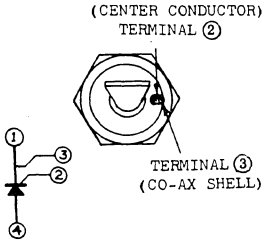

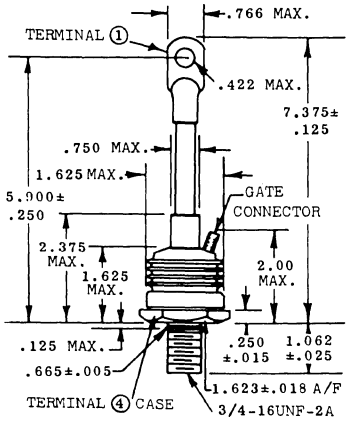

S134

	A	B
S134	.050	.125±.050
S134a	.065	.100±.075

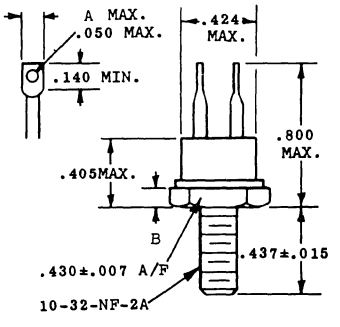

15. OUTLINE DRAWINGS

S143

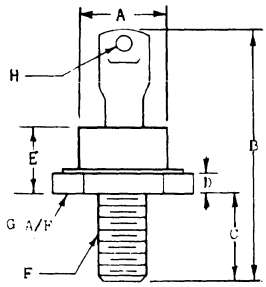

	A	B	C	D	E	F	J	H
S143	.500	1.44	.437	.094	.375	1/4-28	.688	.145
S143a	.570	1.58	.520	.262	.490	1/4-28	.430	.157

S154

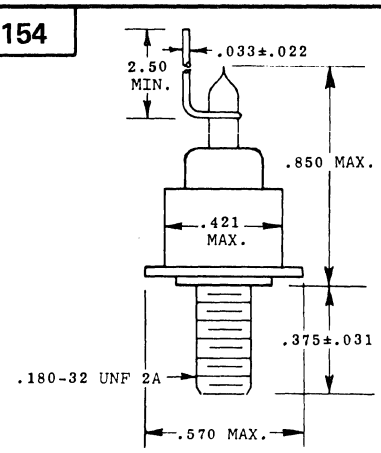

S168

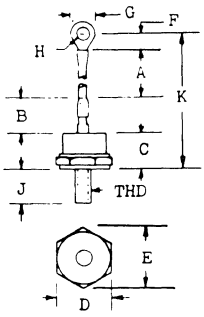

	A	B	C	D	E	F	G	H	J	K	THD
S168	5.75	.600	.450	.687	.790	.500	.500	.265	.437	7.30	1/4-28UNF-2A
S168a	4.50	1.25	.500	.600	.790	.500	.500	.265	.437	6.75	1/4-28UNF-2A
S168b				1.06	1.23	.251	.649	.267	.712	5.94	M12

S171

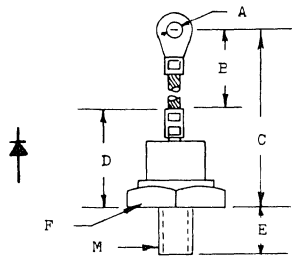

	A	B	C	D	E	F	M
S171a	.219	2.69	3.94	1.25	.688	.598	M6
S171b	.219	2.88	4.13	1.25	.688	.641	M6
S171c	.250	3.88	5.63	1.75	.875	.875	M10
S171d	.313	4.56	6.31	1.75	.625	.875	M10
S171e	.344	7.50	10.3	2.75	.875	1.25	M20
S171f	.500	8.38	11.6	3.25	1.00	1.81	M24
S171g	.263		4.72	1.12	.393		M8
S171h	.041	7.25	10.0	2.84	.708	1.06	M16x.059
S171i	.172 .140		3.00 3.25	1.0	.468 .418	.668 .664	1/4-28UNF2A
S171j	.204	4.01	5.11	1.10	.511		M6
S171k	.251	4.13	5.31	1.20	.551		M8
S171m	.330	4.52	6.29	1.77	.708		M12
S171n	.326	4.33	6.49	2.16	.787		M16x.059
S171p	.413	7.87	1.02	2.36	.787		M24x.059
S171q	.263		4.72	1.12	.393		M8
S171r	.204	2.36	3.46	1.10	.708		M6
S171s	.208	4.05	5.11	1.06	.511		M6
S171t	.208	4.17	5.31	1.14	.551		M8
S171u	.330	5.39	7.48	1.69	.708		M12
S171v	.330	4.60	6.29	1.69	.708		M12
S171w	.330	5.39	7.48	2.08	.787		M16x.059
S171x	.413	6.65	9.05	2.40	.787		M24x.059
S171y	.255		5.35	1.14	.551	SW17	M8

S181

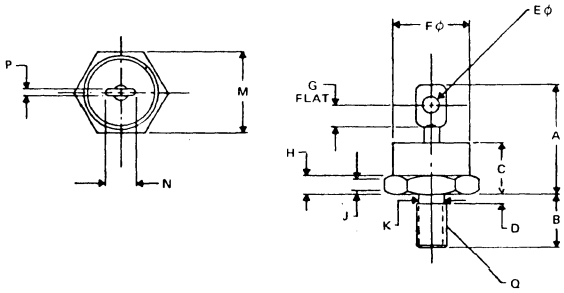

	A	B	C	D	E	F	G	H	J	K	M	N	P	Q
S181		.492	.394	.118	.158			.118				.295		
S181a	1.00 MAX	.423 .453	.450 MAX	.078 MAX	.070 .140	.667 MAX	.156 MIN	.136 .176	.060 MIN	.220 .230	.667 .687	.375 MAX	.090 MAX	1/4-28UNF-2A
S181b	1.00 MAX	.421 .452		.086 MAX	.149 .181	.602 MAX	.118 MIN	.118 .196		.236 MAX	.669	.236 .374		M6

S187

NOTE: TYPE NUMBER SUFFIX
N- INDICATES ANODE CONNECTED TO STUD
P- INDICATES CATHODE CONNECTED TO STUD

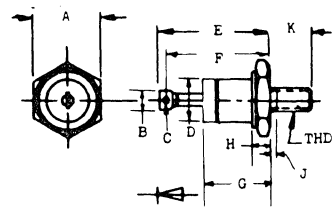

	A	B	C	L	E	F	G	H	J	K	THD	POLARITY
S187	.437				1.03					.452	10-32UNF-2A	
S187a	.444	.196	.070	.283	.80	.728	.405	.145	.062	.452	M5	
S187b	.196		.086		.669						M4	
S187c	.426 .437	.156	.100	.275 MAX	.800 MAX		.405 MAX	.100		.437	10-32	SEE NOTE
S187d	.687	.281	.140	.500	1.00 MAX		.437	.125		.422 .459	1/4-28	SEE NOTE
S187e	.433	.157	.078	.354	.799 MAX	.721 MAX	.401	.177		.433	10-32UNF-2A	

S193

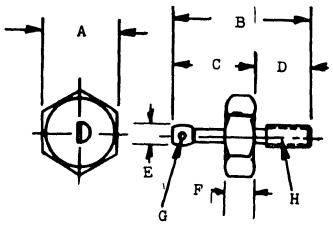

	A	B	C	D	E	F	G	H
S193	.429 .445	.945	.472	.334 .374			.047	#10-32UNF-2A
S193a	.421 .445	1.070	.669	.425 .465	.197	.260 .291	.062 .079	M5X.80
S193b	.472	1.10	.649	.393	.114	.334	.066	.196ISO

15. OUTLINE DRAWINGS

S203

NOTE: TYPE NUMBER SUFFIX
N— INDICATES ANODE CONNECTED TO STUD.
P— INDICATES CATHODE CONNECTED TO STUD.

	A	B	C	D	E	F	G	H	J	POLARITY	THD
S203	.840	5.31	.813	1.50	1.06	.687	1.44	.437	.375		
S203a	.750	.600	.875	1.50	1.25	1.16	1.66	.281	.375	ANODE	3/4-16
S203b	.63	6.3	.71		.89	1.47	1.75		.375	CATHODE	M12x.068
S203c	.625	5.87 6.12	.812	1.24	1.00	1.50	2.31	.359	.312	SEE NOTE	3/4-16
S203d	1.00	9.81 10.0	1.06	1.68	1.50	1.62	2.87	.421	.375	SEE NOTE	3/4-16

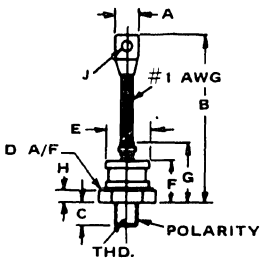

S206

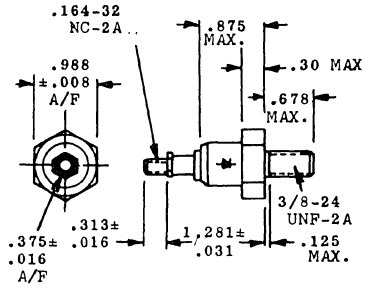

S221

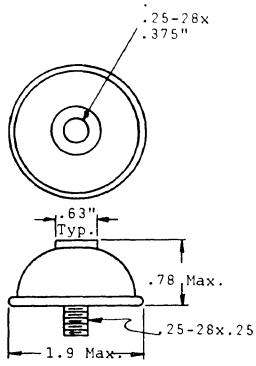

S245

	A	B	THD.
S245	.865	1.06	M12
S245a		1.26	.630

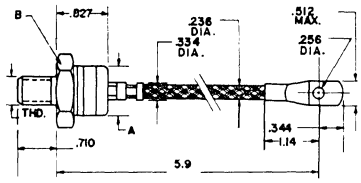

S249

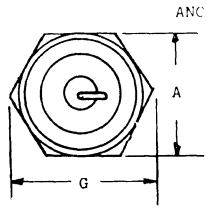

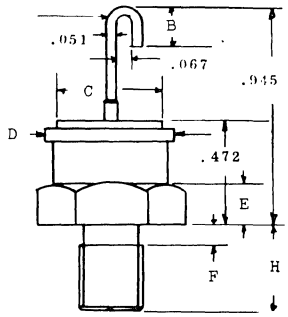

	A	B	C	D	E	F	G	H
S249	.670	.197	.492	.630	.197	.099		.433
S249a	.551	.177		.511	.157	.078		.433
S249b	.551 .670 TYP	.177 .197 TYP		.425 .630 TYP	.157 .197 TYP		.638 .772 TYP	.472

S277

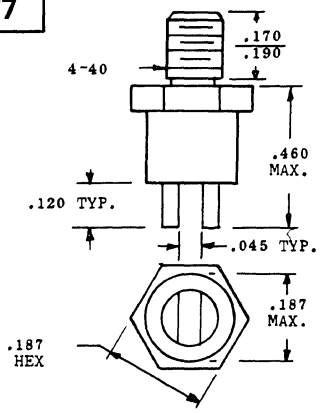

S281

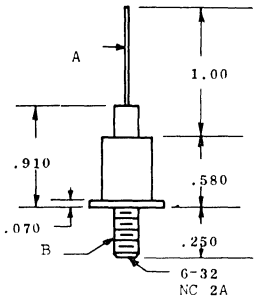

	A	B
S281	CATHODE	ANODE
S281a	ANODE	CATHODE

S290

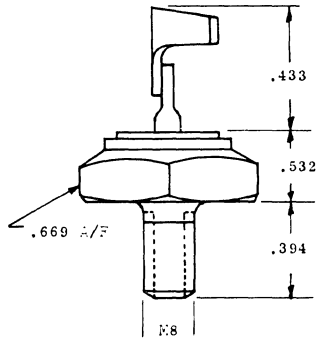

S292

	A	B	C	D	E	F
S292	.420 .460	.100 .140	.163 .187	.177 .197	.035 .055	.230 .250
S292a	.500 MAX			.177 .197	.035 .055	.230 .250
S292b	.460 MAX	.100 MAX		.197 MAX	.054 MAX	.230 .250

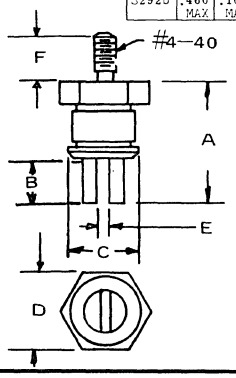

S293

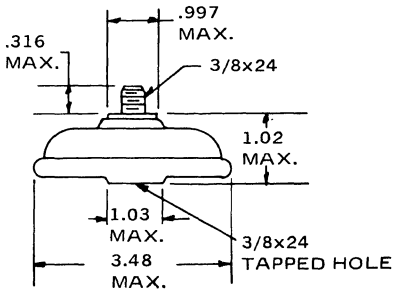

15. OUTLINE DRAWINGS

S305

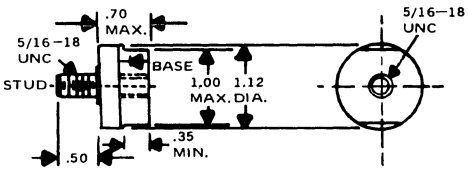

S322

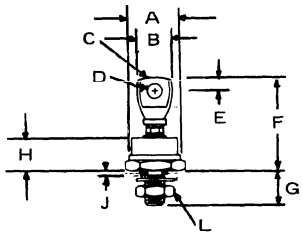

	A	B	C	D	E	F	G	H	J	L
S322	.672	.460	.050 .062	2BA	.167 .197	1.20 MAX	.427 .447	.417 MAX	.075	1/4-28 UNF
S322a		.316		6UNC	.134	1.12 MAX	.434	.434		1/4-28 UNF
S322b		.256		.059		.801	.434	.173		10-32 NF-2A
S322c		.462		10UNF	.197	1.264	.434	.146		1/4-28 UNF-2A

S324

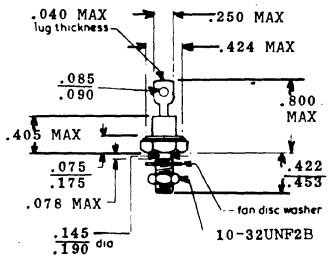

S329

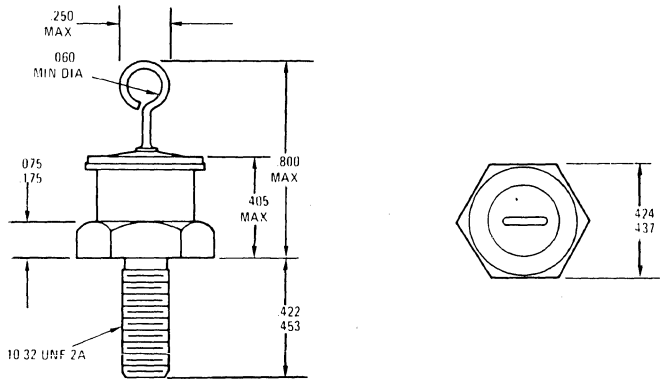

S339

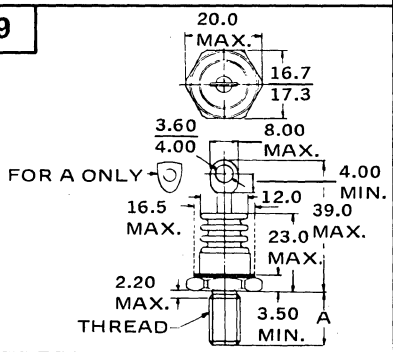

	A	THREAD
S339	.426 .448	M6x.039
S339a	.532 .570	M8x.049

DIMENSIONS IN "MM"

S344

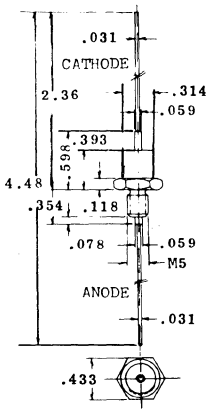

S345

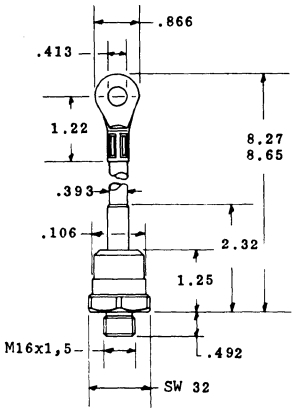

S352

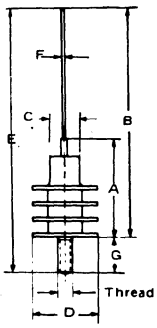

	A	B	C	D	E	F	G	THREAD
S352	.669	3.62	.315	.709	4.01	.039	.394	10-32 UNF
S352a	1.06		.313	.719		.049		M4
S352b	1.06	4.01	.315	.709	4.41	.039	.400	M4

S403

	A	B	C	D	E	F
S403	.970 1.02	.050 .080	.307 .317	.318 .365	3.45 3.65	.950 1.25
S403a	.730 .830	.080 MAX	.240 .264	.265 .400	1.85 1.95	.570 .670

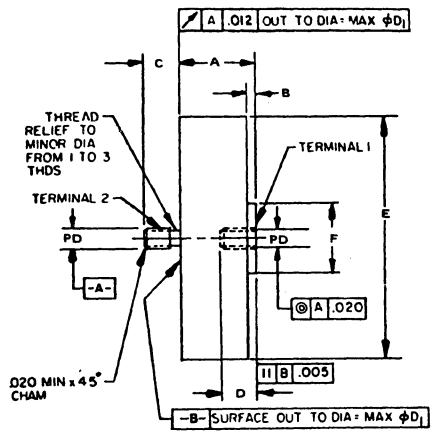

15. OUTLINE DRAWINGS

S407

	A	B	C	D	E	F	G	H	J	K	M	N	P	Q	R	S	TERM1	TERM2
S407	5.12	2.30	1.52	1.10	.793	3/4-16	.660	.250	.375	.125	.600	.375	.530	.265	1.21	.063	CATHODE	ANODE
	6.75	MAX	MAX	MAX	.828	UNF-2A	.745	.562	MAX	MAX	MAX	MIN	.755	.350	1.25	.172		
S407a	4.30	1.67	1.00	.625	.605	3/8-24	.343	.125	.400		.500	.300	.670	.250	1.03	.050	CATHODE	ANODE
	4.80	MAX	MAX	1.00	.645	UNF-2A	.373	.500	MAX		MAX	.450	MAX	.310	1.06	.120		
S407b	5.12	2.30	1.52	1.10	.793	3/4-16	.660	.250	.375	.125	.600	.375	.530	.265	1.21	.063	ANODE	CATHODE
	6.75	MAX	MAX	MAX	.828	UNF-2A	.745	.562	MAX	MAX	MAX	MIN	.755	.350	1.25	.172		
S407c	4.30	1.67	1.00	.625	.605	3/8-24	.343	.125	.400		.500	.300	.670	.250	1.03	.050	CATHODE	ANODE
	4.80	MAX	MAX	1.00	.645	UNF-2A	.373	.500	MAX		MAX	.450	MAX	.310	1.06	.120		

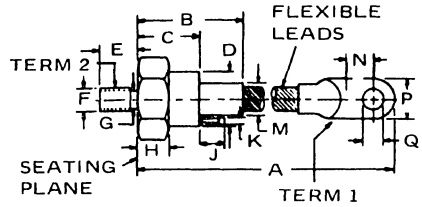

S408

	A	B	C	D	E	F	G	H	J	THREAD
S408	5.82	.653	.326	.984	1.81	.866	.511	.511	SW27	M12
S408a	5.31		.208		1.14			.551	SW17	M8
S408b	6.37		.330		1.69			.708	SW24	M12
S408c	4.330	.354	.208	.492	.984	.472	.177	.354	SW14	M6
S408d	4.724	.468	.263	.610	1.125	.590	.236	.393	SW17	M8
S408e	5.826	.653	.326	.984	1.181	.866	.374	.511	SW27	M12

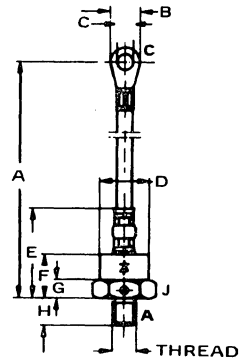

S416

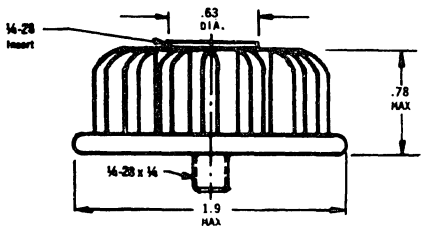

S421

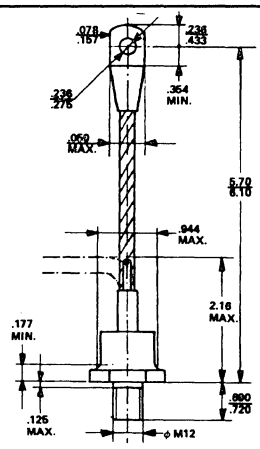

S422

	A	B	C	D	E	F	G	H	J	K	THREAD
S422	5.35		1.06	.629		.236	1.22	.374	.263	.433	1/2-20 UNF 2A
	MIN		MAX								
S422a	9.40	3.00	1.580	1.031	1.647				.391	.890	3/4-16 UNF 2A
	9.78	MAX	1.639	1.093	1.687				.421	.990	

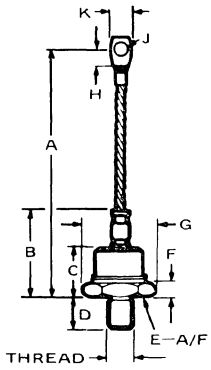

S423

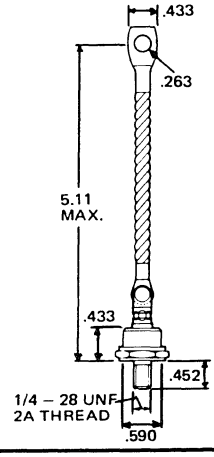

15. OUTLINE DRAWINGS

S426

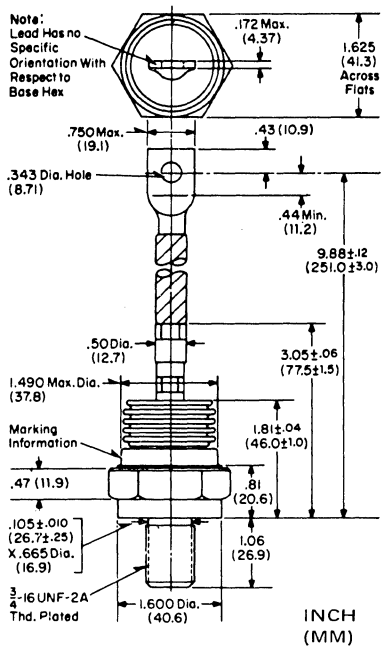

S427

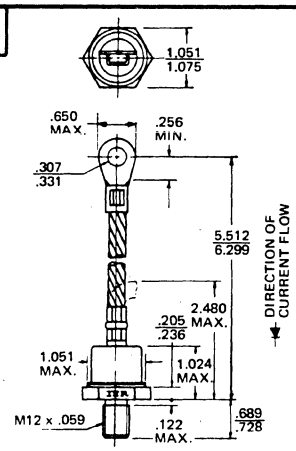

S433

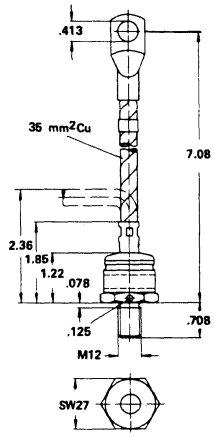

S435

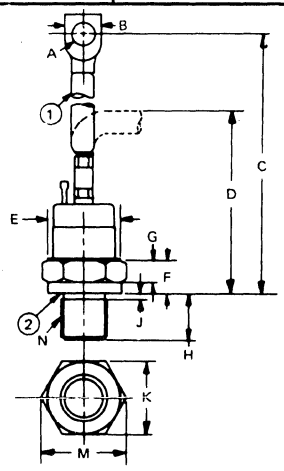

	A	B	C	D	E	F	G	H	J	K	M	THD	1	2
S435	.330	.630	6.57	3.74 MAX	1.26 MAX	.590	.340	.780	.130 MAX	1.26	1.46	M20x.060	K	A
S435a		.665 .755	5.300 5.700				.500 .750	.797 .827	.156 MAX	1.240 1.250		3/4-16UNF2A	A	K
S435b	.252	.472	5.865 6.495	2.95 MAX	1.063 MAX	.512 MAX	.275 MIN	.65 .69	.130 MAX	1.063	1.22	M12x1.5	K	A
S435c	.335 DIA	.650	6.181 6.811		1.26 MAX	.550 MAX		.770 .810		1.24 1.27	1.456	M20x1.5	K	A
S435d	.413	.964 MAX	9.72		1.60	.488	.448	.984 MAX	.129		1.61	M24x1.5	K	A
S435e	.330	.649	6.06		1.05	.507	.377	.708	.129	1.06	1.14	M12x1.5	K	A
S435f	.413	.708	6.37		1.24	.558	.429	.807	.129	1.25		M20x1.5	K	A
S435g	.326	.649	5.90	2.48	1.05	.350	.220	.708	.129	1.06		M12x1.5	K	A
S435h	.326	.649	5.90	2.48	1.05	.350	.220	.708	.129	1.06		M12x1.5	A	K
S435j	.410	.840	7.87	3.15	1.08	.550		.830				16UNF	A	K
S435k	.410	.840	7.87	3.15	1.08	.550						NO STUD	A	K

S436

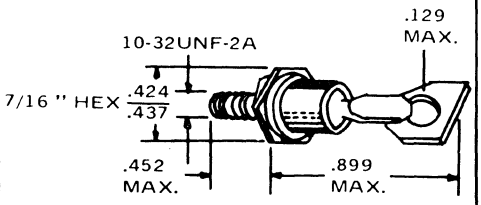

S437

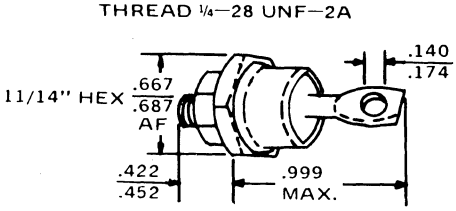

S438

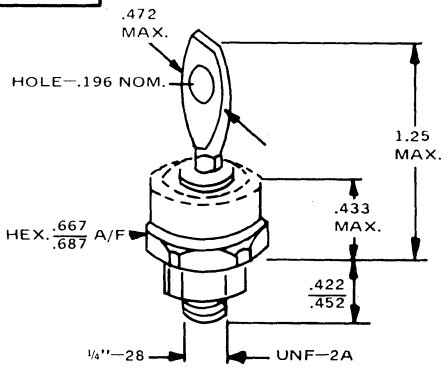

S439

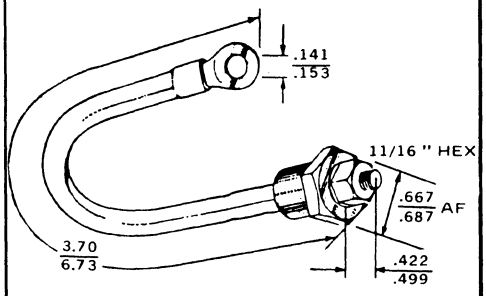

15. OUTLINE DRAWINGS

S441

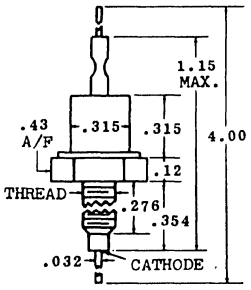

	THREAD
S441	M4
S441a	M5

S442

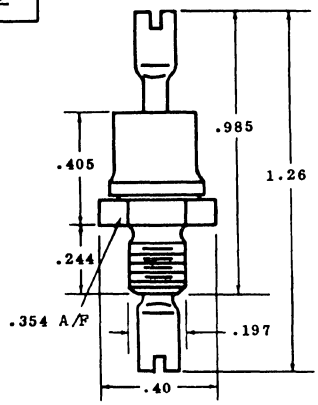

S450

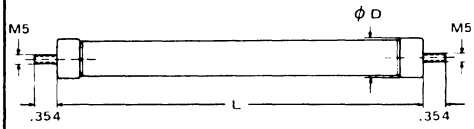

	ϕD	L
S450	.590	2.67
S450a	.590	3.26
S450b	.590	4.25
S450c	.590	5.03
S450d	.590	6.61
S450e	.590	7.79
S450f	.826	5.03
S450g	.826	6.61
S450h	.826	7.79
S450j	.826	8.97

S452

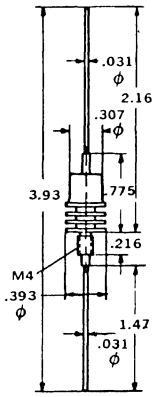

S453

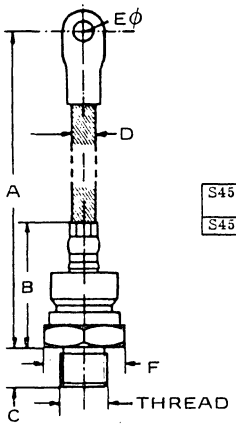

	A	B	C	D	EØ	F	THD
S453	9.05	2.40	.787 / .984	.108	.413	SW41	M.944x.059
S453a	7.48	2.08	.787	1.37	.330	SW32	M16x1.5

S455

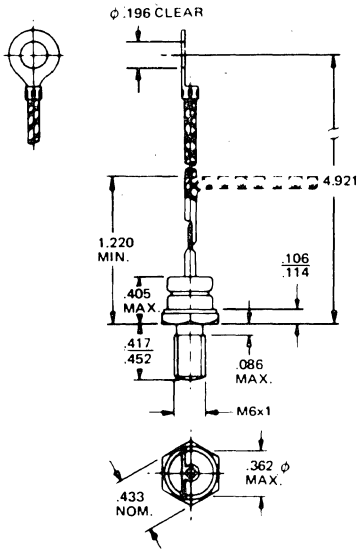

S456

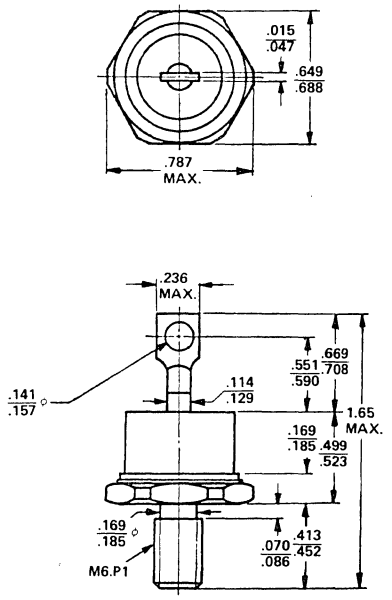

S457

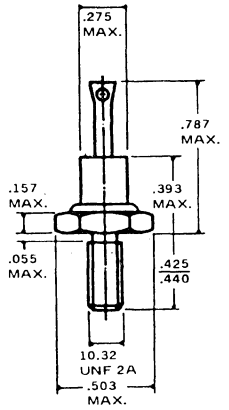

15. OUTLINE DRAWINGS

S458

BLACK DOT — NEGATIVE
RED DOT — POSITIVE

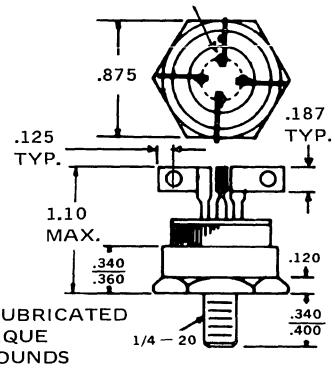

MAX. UNLUBRICATED
STUD TORQUE
30 INCH-POUNDS

S458a	CENTER TAP COMMON CATHODE
S458b	CENTER TAP COMMON ANODE
S458c	THREE PHASE COMMON CATHODE
S458d	THREE PHASE COMMON ANODE
S458e	DOUBLER
S458f	TRIPLER
S458g	QUADRUPLER

S459

BLACK DOT — NEG.
RED DOT — POS.

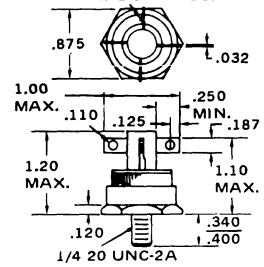

1/4 20 UNC-2A
MAX. UNLUBRICATED
STUD TORQUE
30 INCH-POUNDS

S459a	CENTER TAP COMMON CATHODE
S459b	CENTER TAP COMMON ANODE
S459c	THREE PHASE COMMON CATHODE
S459d	THREE PHASE COMMON ANODE

S461

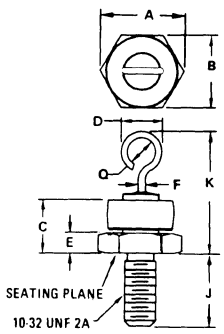

DIM	MILLIMETERS MIN	MILLIMETERS MAX	INCHES MIN	INCHES MAX
A	12.12	12.70	0.477	0.500
B	10.77	11.10	0.424	0.437
C	–	10.29	–	0.405
D	–	6.35	–	0.250
E	1.91	4.45	0.075	0.175
F	1.19	1.35	0.047	0.053
J	10.72	11.51	0.422	0.453
K	–	20.32	–	0.800
Q	1.52	–	0.060	–

S464

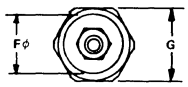

	A	B	C	D	E	F	G	H	J	K
S464	2.00	.625	1.50	.750	.437	.812	1.055	.062	1/4-28UNF-2A	3/8-24UNF-2A
S464a	3.00	.812	2.25	1.41	.625	1.00	1.24	.125	3/8-24UNF-2A	3/4-16UNF-2A
S464b	4.390 4.410	1.031 1.093	2.72 MAX	1.580 1.639	.990 1.010	1.450 1.470	1.647 1.687	.680 .700	3/8-24UNF-2A	3/4-16UNF-2A
S464c	2.60	.728 MAX	2.00 MAX	1.02 MAX	.590		1.06	.196	M6X1.0	M12X1.5

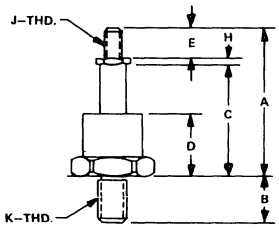

S465

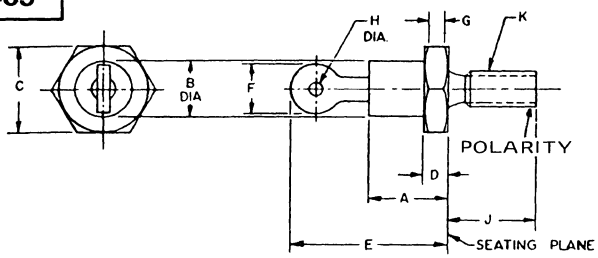

	A	B	C	D	E	F	G	H	J	K	POLARITY
S465	.405 MAX	.424 MAX	.424 .437	.075 .175	.800 MAX	.250 MAX	.060 MIN	.060 MIN	.422 .435		CATHODE
S465a	.405 MAX	.424 MAX	.424 .437	.075 .175	.800 MAX	.250 MAX	.060 MIN	.060 MIN	.422 .453		ANODE
S465b					1.102	.279		.137	.433	1/4-28UNF2A	CATHODE
S465c					1.102	.279		.137	.433	1/4-28UNF2A	ANODE
S465d	.511			.236	1.047	.275		.149	.444	1/4-28UNF2A	CATHODE
S465e	.511			.236	1.047	.275		.149	.444	1/4-28UNF2A	ANODE

S466

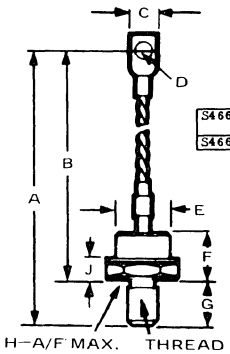

	A	B	C	D	E	F	G	H	J	THREAD
S466	5.31	4.64	.472	.275	.669 MAX	.448	.452 MAX	.687	.185	1/4-28UNF2A
S466a	3.54	3.09	.255	.137	.590	.444	.450			1/4-28UNF2A

S467

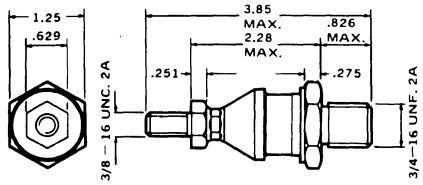

S468

FLAT BASE VERSION (TO ORDER ADD "C" AT END OF TYPE NO.).

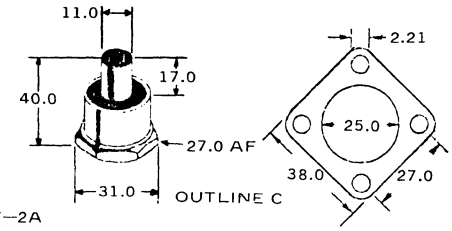

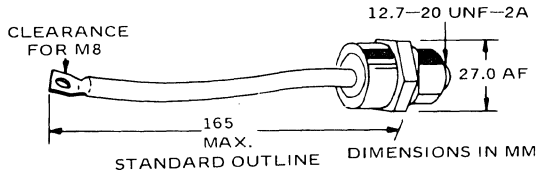

15. OUTLINE DRAWINGS

S471

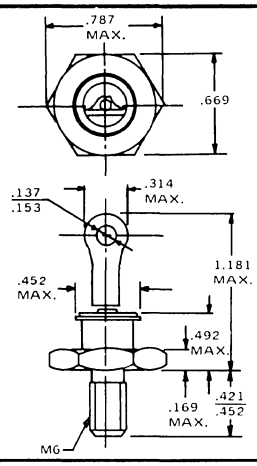

S472

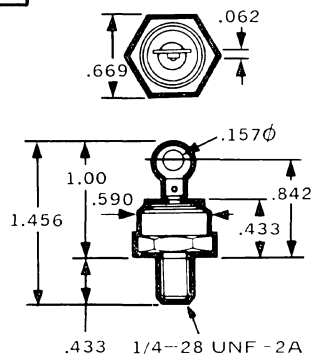

S474

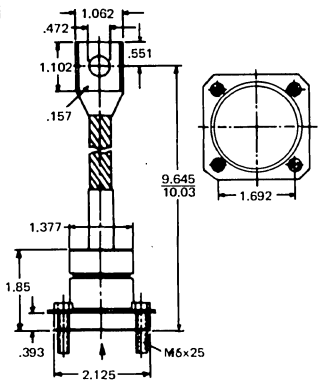

S475

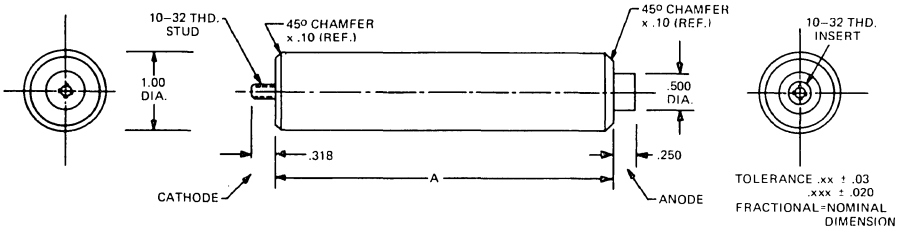

	A
S475	4.50
S475a	6.63
S475b	8.75

S476

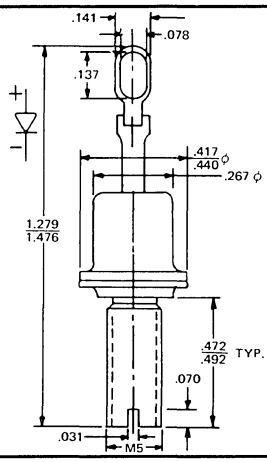

S477

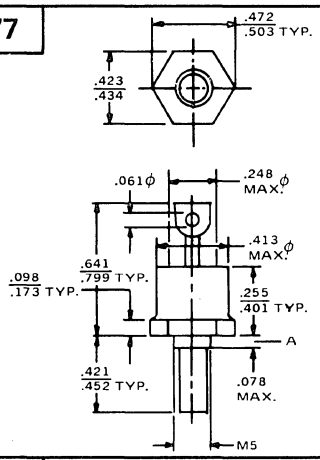

S478

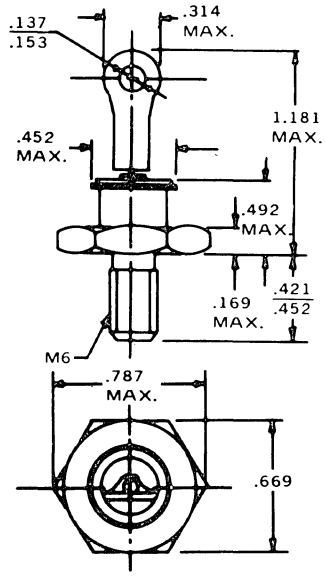

S480

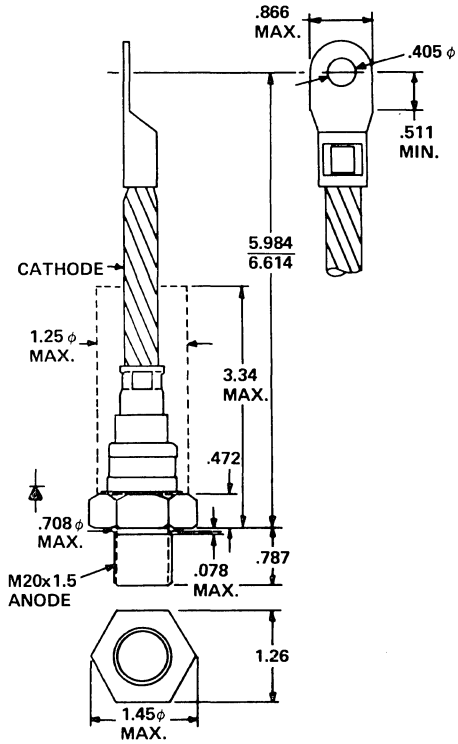

S481

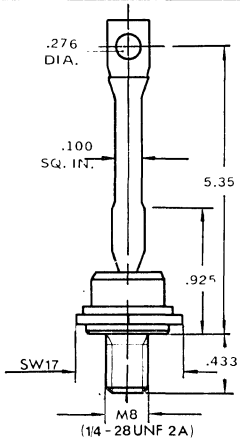

15. OUTLINE DRAWINGS

S487

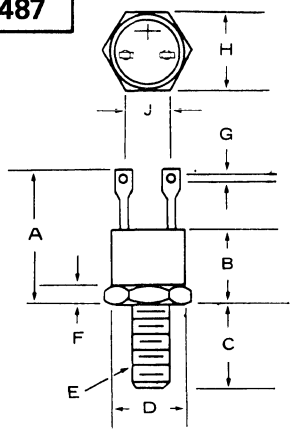

	A	B	C	D	E	F	G	H	J
S487	.588 / .718	.325 / .410	.400 / .455	.318 / .380	10-32UNF-2A	.090 / .150	.040 / .065	.424 / .437	.185 / .215
S487a	.755 / .850	.400 / .460	.422 / .455	.580 / .610	14-28UNF-2A	.090 / .150	.055 / .075	.667 / .687	.370 / .415

S488

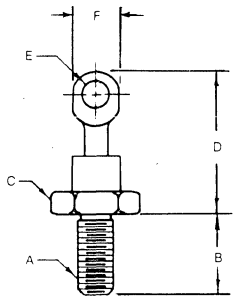

	A	B	C	D	E	F
S488	10-32UNF-2A	.440 / .470	.420 / .440	.720 MAX	.090 MIN	.200 MAX
S488a	1/4-28UNF-2A	.440 / .468	.670 / .690	1.00 MAX	.150 / .190	.280 MAX
S488b	1/4-28UNF-2A	.440 / .470	.670 / .690	1.00 MAX	.150 / .180	.280 MAX

S491

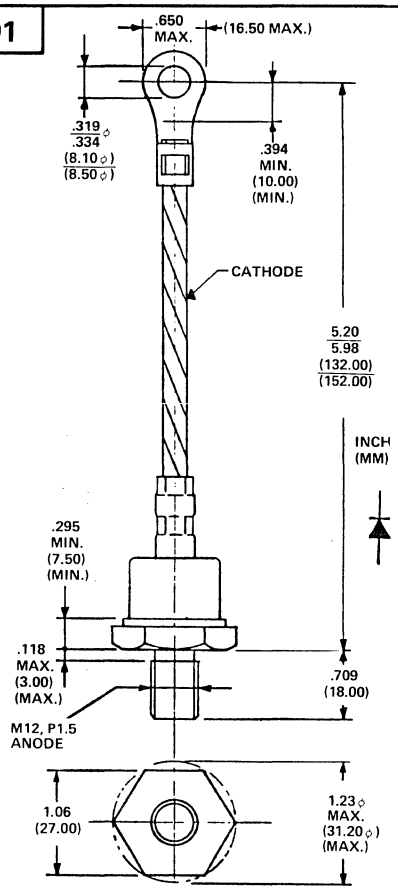

S492

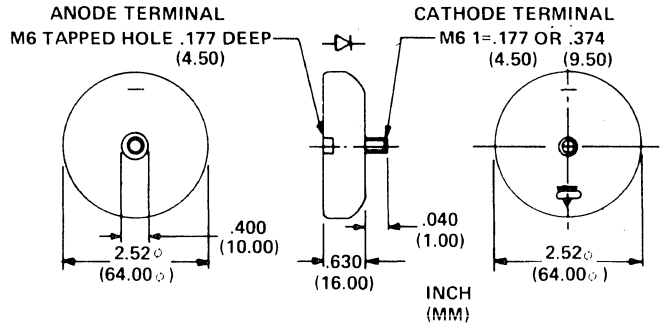

S493

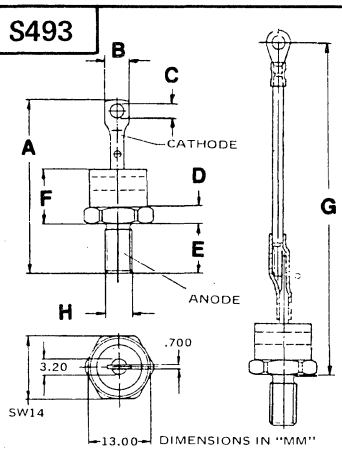

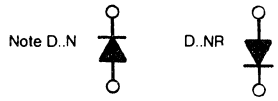

	A	B	C	D	E	F	G	CASE C H	CASE U H	CASE B H
S493	39	5.5	3.2	3.5	11.5	12		M6		
S493a		5.5	3.2	3.5	11.5	12	120 / 130			M6
S493b	+3 / 24.5-2	4.3	2.7	4.5	11.5	14.5		M5		
S493c			5.2	4.5	11.5	14.5	125±5			M5
S493d	+3 / 24.5-2	4.3	2.7	4.5	11.5	14.5		M6	¼"	
2493e			5.2	4.5	11.5	14.5	125±5			M6

S494

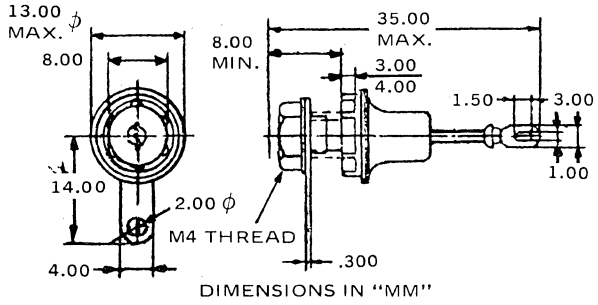

S495

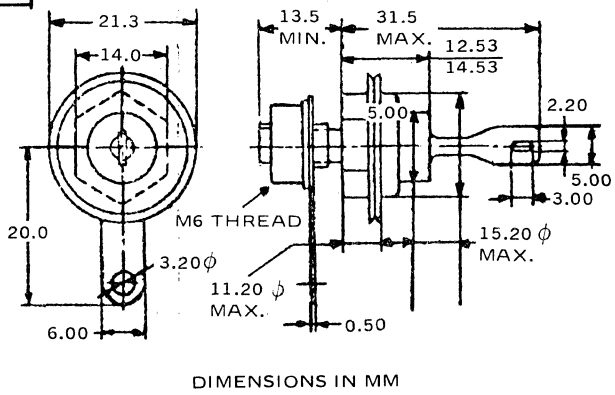

15. OUTLINE DRAWINGS

S496

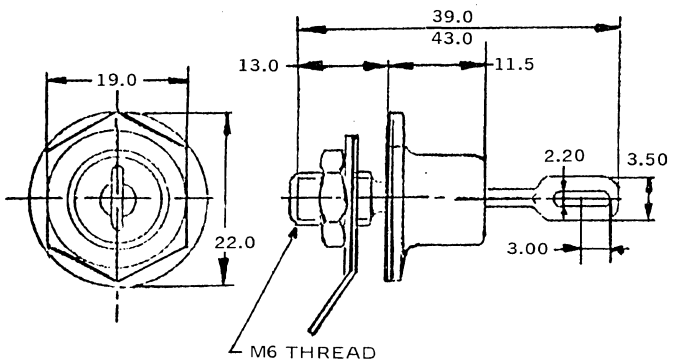

ALL DIMENSIONS IN MM

S498

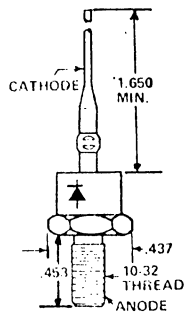

S499

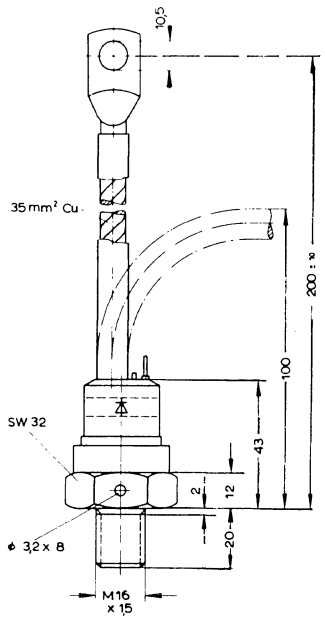

DIMENSIONS IN "MM"

S502

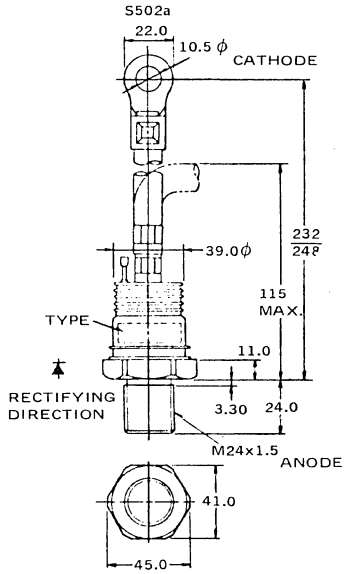

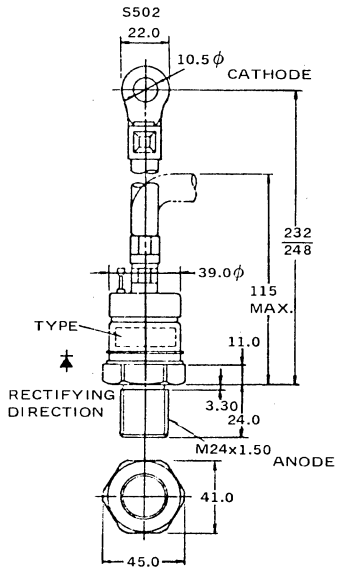

S503

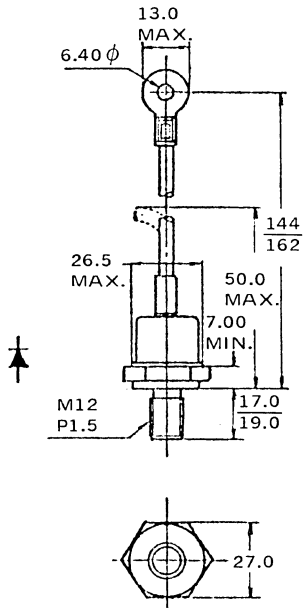

DIMENSIONS IN "MM"

S505

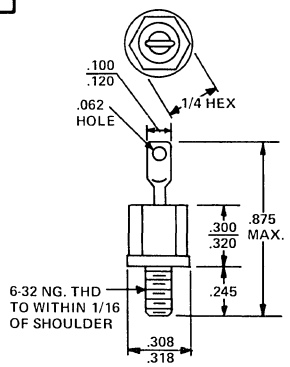

15. OUTLINE DRAWINGS

S506

	A	B	C	D	E	F	G	H	I	J	K	THR
S506	185	130	43	26	23	27	40 sq mm	8.5	19	SW35		M18 × 2
S506a	185	130	43	26	27	27	40 sq mm	8.5	19	SW35		3/4 UNF2A
S506b	219	145	61	31	27	35	60 sq mm	10.5	24	SW42		M18 × 2
S506c	219	145	61	31	27	35	60 sq mm	10.5	24	SW42		3/4 16UNF2A
S506d	166				20		15 sq mm	8.5	14	SW27	159	1/2 20UNF24
S506e	166				20		15 sq mm	8.5	14	SW27	159	M12.175
S506f	185				23		30 sq mm	8.5	19	SW35	173	3/°. 16UNF2A
S506g	185				23		30 sq mm	8.5	19	SW35	173	M18.200
S506h	219				27		60 sq mm	10.5	24	SW42	206	3/4 16UNF2A
S506i	219				27		60 sq mm	10.5	24	SW42	206	M18.200
S506j	171				20		15 sq mm	8.5	14	SW27	164	M12.175
S506k	171				20		15	8.5	14	SW27	164	20 UNF2A
S506l	200				23		30 sq mm	8.5	19	SW32	191	M18.200
S506m	200				233		30 sq mm	8.5	19	SW32	191	3/4 16UNF2A
S506n	230				27		60 sq mm	105	24	SW41	217	M18.206
S506o	230				27		60	10.5	24	SW41	217	3/4 16UNF2A
S506p				28	21	36		8.7	19		127	3/4 16UNF2A

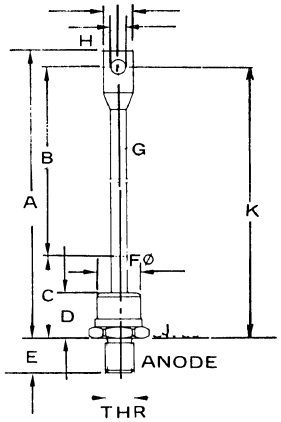

ALL DIMENSIONS IN "MM"

S507

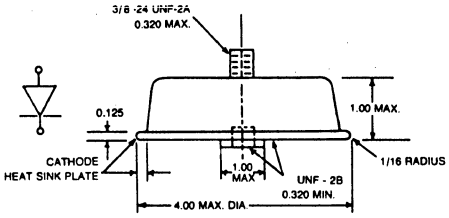

S508

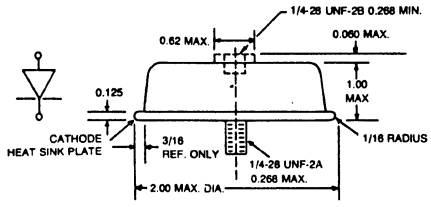

S509

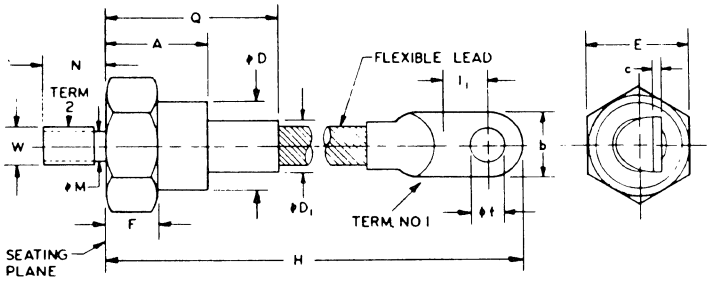

NOTES
1. ALL DIMENSIONS ARE IN INCHES.
2. METRIC EQUIVALENTS ARE GIVEN FOR GENERALINFORMATION ONLY AND ARE BASED UPON 1.00 INCH=25.4 MM.
3. COMPLETE THREADS TO EXTEND TO WITHIN 2-1/2 THREADS OF SEATING PLANE.
4. .375-24 UNF-2A. MAXIMUM PITCH DIAMETER OF PLATED THREADS SHALL BE BASIC PITCH DIAMETER (.3479 IN., 8.837 MM) REFERENCE.
5. A CHAMFER OR UNDERCUT ON ONE OR BOTH ENDS OF HEXAGONAL PORTIONS IS OPTIONAL.
6. MINIMUM FLAT.
7. FOR MARKING SEE 3.5 IN SPEC SHEET.

	TERM 2	TERM 1
S509:	CATHODE	ANODE
S509a:	ANODE	CATHODE

SYMBOL	Dimensions				NOTES
	Inches		Millimeters		
	Min	Max	Min	Max	
A		1.000		25.40	
b		.670		17.02	
c	.050	.120	1.27	3.05	
ØD	.625	1.000	15.88	25.40	
$ØD_1$		.500		12.70	
E	1.031	1.064	26.19	27.03	
F	.125	.500	3.18	12.70	5
H	4.300	4.800	109.22	121.92	
I_1	.300	.450	7.62	11.43	6
ØM	.343	.373	8.71	9.47	3
N	.605	.645	15.37	16.38	
Q		1.675		42.54	
Øt	.250	.310	6.35	7.87	
W					4

S510

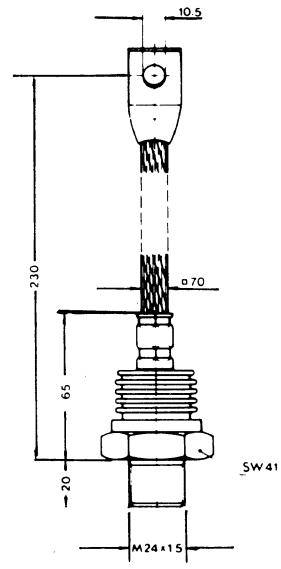

DIMENSIONS IN "MM"

15. OUTLINE DRAWINGS

S512

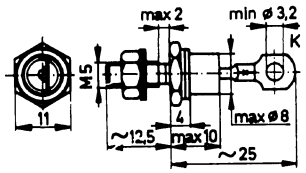

DIMENSIONS IN "MM"

S513

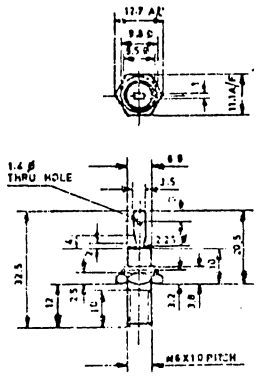

DIMENSIONS IN "MM"

S514

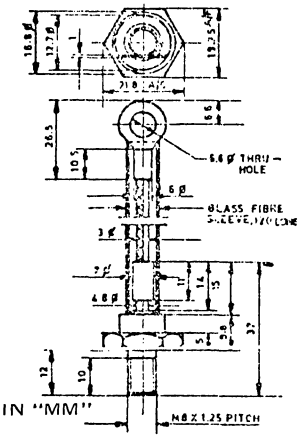

DIMENSIONS IN "MM"

S515

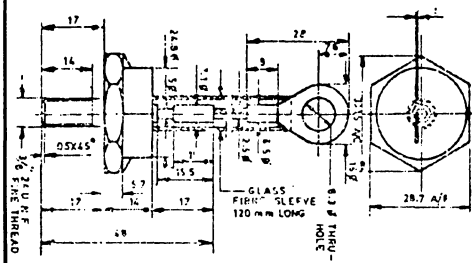

DIMENSIONS IN "MM"

S516

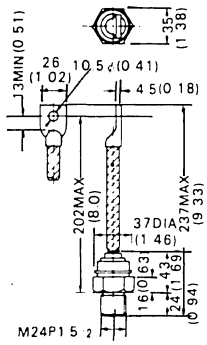

Type	Direction of polarity
H01	▲
Weight	400 (g)

MM
(INCH)

S517

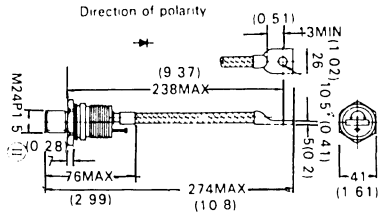

Weight 500 (g)

MM
(INCH)

S518

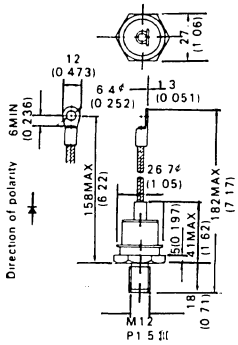

MM
(INCH)

Weight 100 (g)

S519

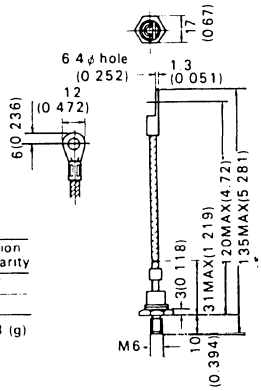

Type	Direction of polarity
S519	▲
S519a	▼
Weight	23 (g)

MM
(INCH)

S520

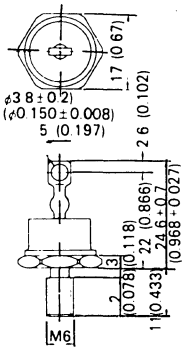

Type	Direction of polarity
S520	▲
S520a	▼
Weight	14(g)

MM
(INCH)

S521

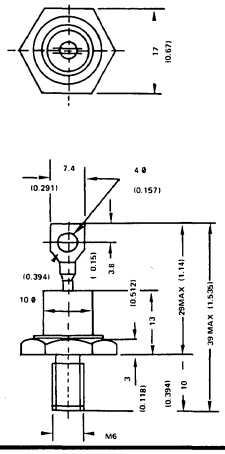

Type	Direction of Polarity
S521	▲
S521a	▼

S522

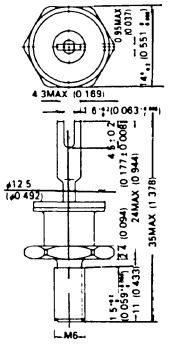

Type	Direction of polarity
S522	▲
S522a	▼
Weight	14(g)

MM
(INCH)

S523

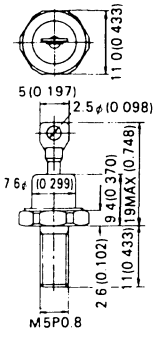

Type	Direction of polarity
S523	▲
S523a	▼
Weight	6(g)

MM
(INCH)

15. OUTLINE DRAWINGS

S524

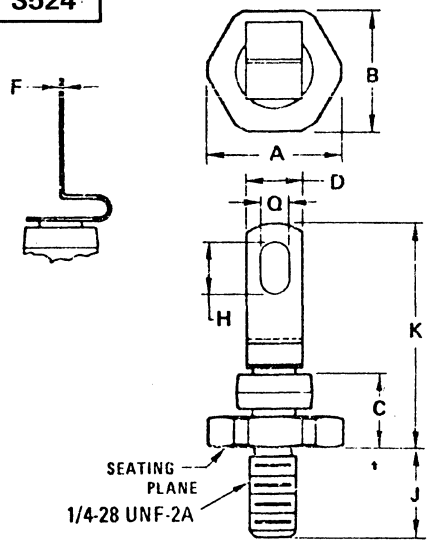

DIM	MILLIMETERS		INCHES	
	MIN	MAX	MIN	MAX
A	18.29	–	0.720	–
B	16.99	17.48	0.669	0.688
C	–	10.67	–	0.420
D	–	8.38	–	0.330
F	0.46	0.56	0.018	0.022
H	7.62	8.13	0.300	0.320
J	10.72	11.51	0.422	0.453
K	–	30.48	–	1.200
Q	4.44	4.70	0.175	0.185

S525

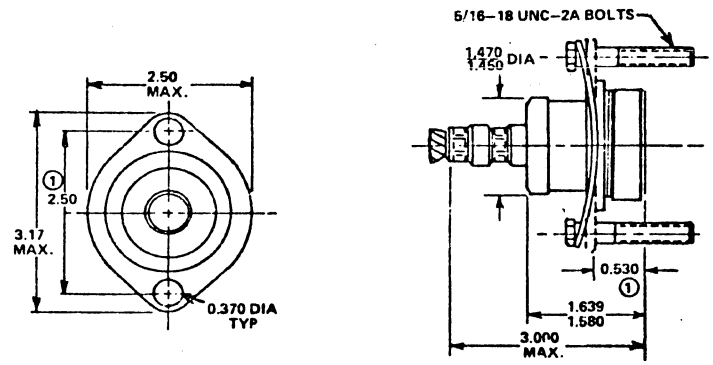

S527

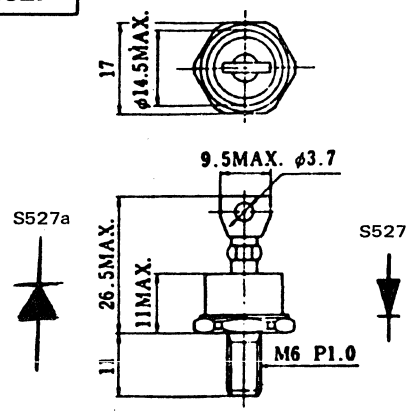

S528

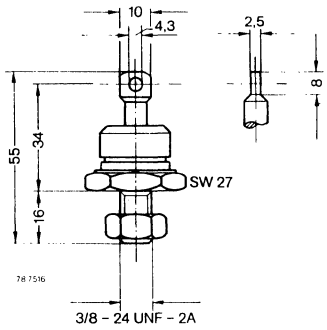

S529

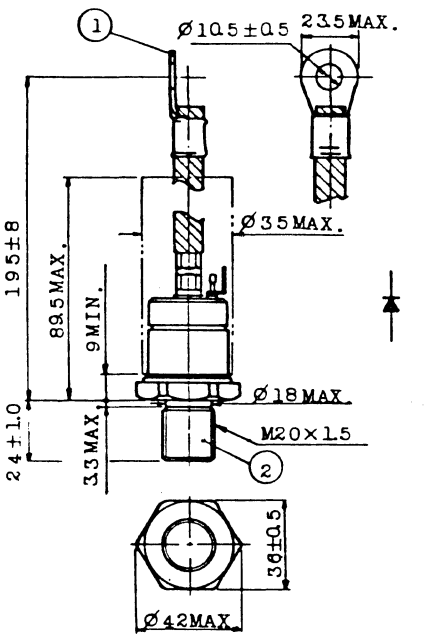

Unit in mm

① CATHODE
② ANODE

S530

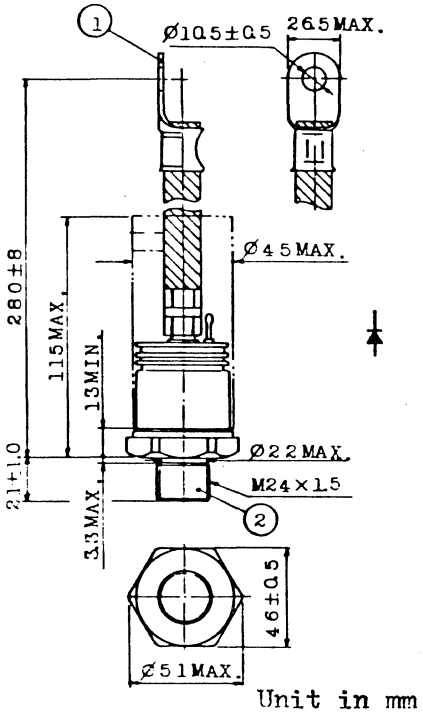

Unit in mm

① CATHODE
② ANODE

S531

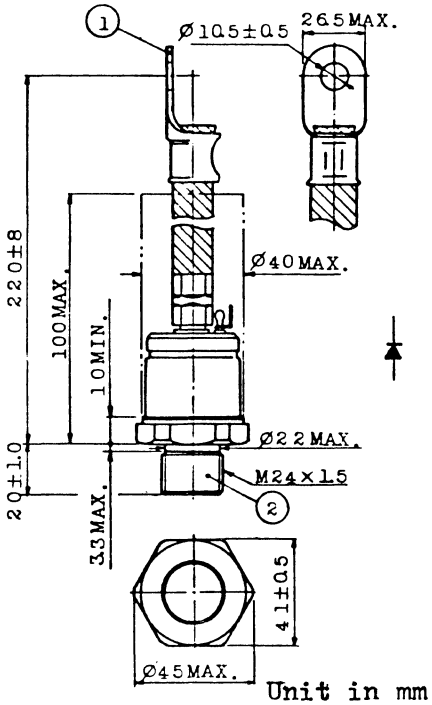

Unit in mm

① CATHODE
② ANODE

15. OUTLINE DRAWINGS

S532

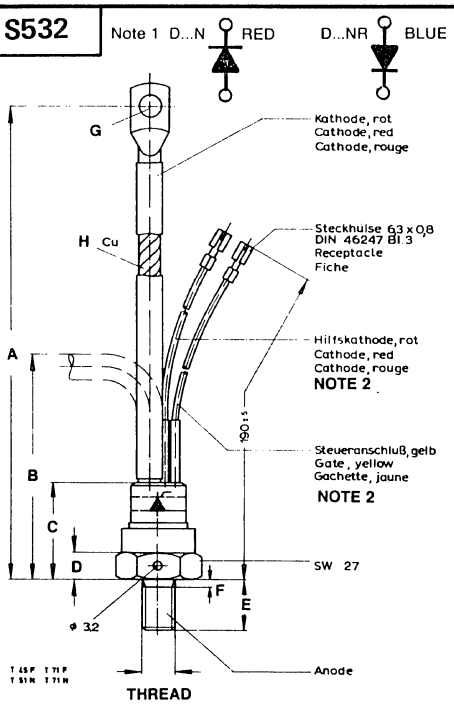

Note 2 Connector Leads only on S532

	A	B	C	D	E	F	G	H	THREAD CASE B	THREAD CASE V
S532	170±5	80	35	10	18	2	8.4	16mm²	M12	
S532a	170±5	80	34	10	18	2	8.4	16mm²	M12	½-20 UNF
S532b	210±10	90	34	10	18	2	10.5	25mm²	M12	½-20 UNF

S533

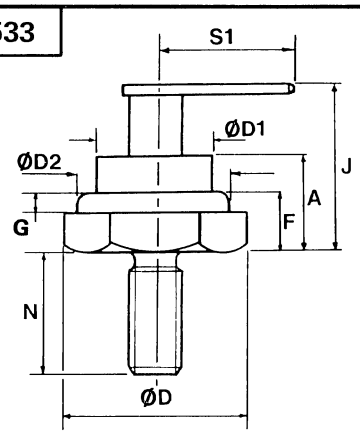

Stud Thread ¼-28 UNF - 2A

Ref.	Millimetres Min.	Millimetres Max.	Inches Min.	Inches Max.
A		14.73		0.580
øD		21.99		0.866
øD1		14.48		0.570
øD2	18.85	18.97	0.742	0.747
F	5.33	7.11	0.210	0.280
G	0.71	2.41	0.028	0.095
J	18.80	20.32	0.740	0.800
N	12.19	13.20	0.480	0.520
S1		18.41		0.725

S534

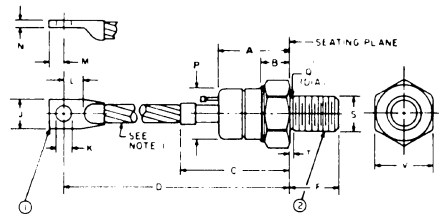

MODEL	TERMINAL 1	TERMINAL 2	S THREAD SIZE
A198 FORWARD POLARITY	ANODE	CATHODE	3/4 16
A198R REVERSE POLARITY	CATHODE	ANODE	UNF 2A

TABLE OF DIMENSIONS
Conversion Table

SYM.	DECIMAL INCHES MIN.	DECIMAL INCHES MAX.	METRIC MM MIN.	METRIC MM MAX.	NOTES
A	1.450	1.550	36.83	39.37	
B	.500	.750	12.70	19.05	
C	2.300	2.500	58.42	63.50	
D	5.300	5.700	134.62	144.78	
F	.797	.827	20.24	21.01	
J	.665	.755	16.89	19.18	
K	.322	.333	8.17	8.46	
L	.437	–	11.99	–	
M	.325	.360	8.25	9.14	
N	.155	.170	–	–	
P	1.060	1.100	26.92	27.94	
Q	.660	.749	16.76	19.02	
T	–	.156	–	3.96	3
V	1.240	1.250	31.49	31.75	

NOTES:
1. Flexible Copper Lead.
2. One Nut and One Lockwasher Supplied With Each Unit. Material of Hardware is Steel, Cad Plated.
3. "T" Dimension is Area of Unthreaded Portion. Complete Threads are Within 2.5 Threads of Seating Plane.
4. Angular Orientation of Terminals is Undefined.

S535

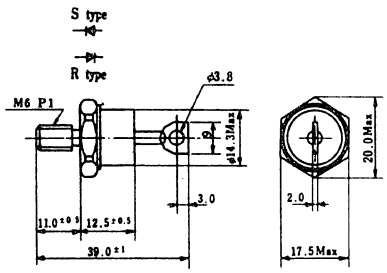

S536

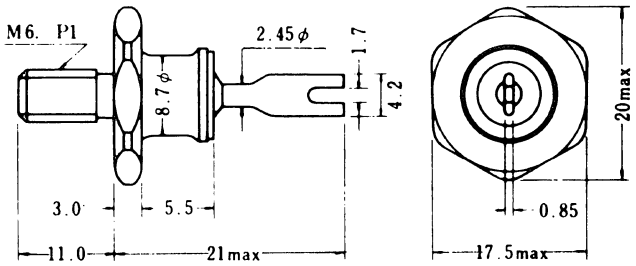

S537

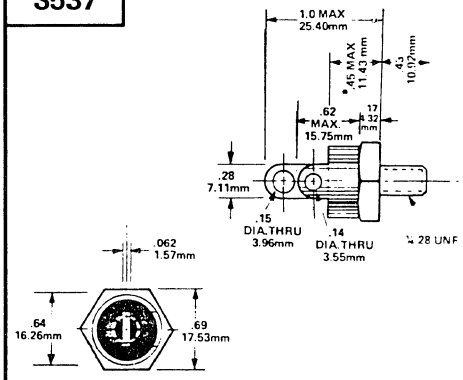

S538

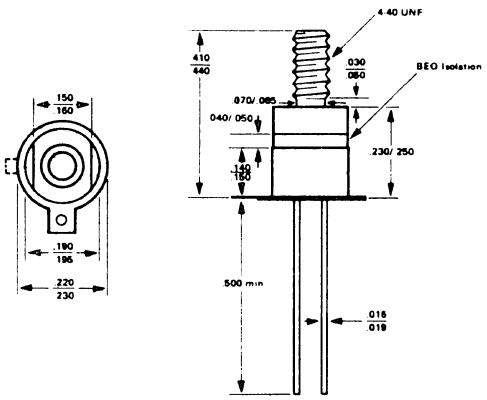

15. OUTLINE DRAWINGS

S540

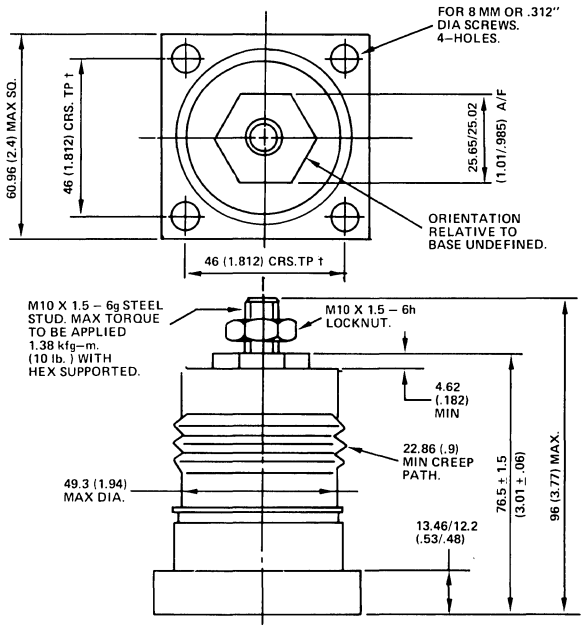

S541

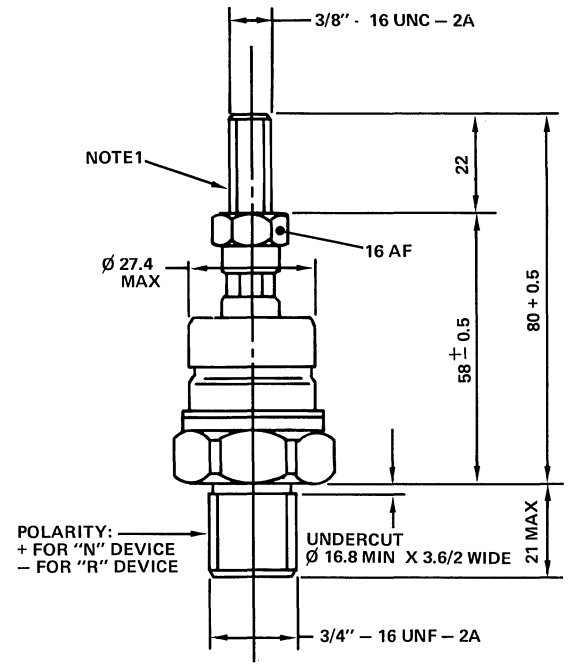

S542

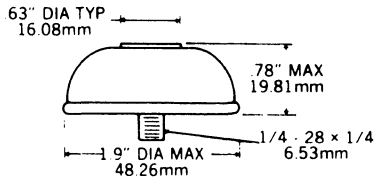

1. Polarity — Cathode connected to base.
2. Part Number — On base of unit.

S543

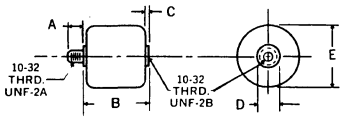

	ins.	mm.
A	.230–.235	5.84–5.97
B	.980–1.10	24.89–27.94
C	.020–.040	0.51–1.02
D	.320–.330	8.13–8.38
E	.97–1.00	24.64–25.40

S544

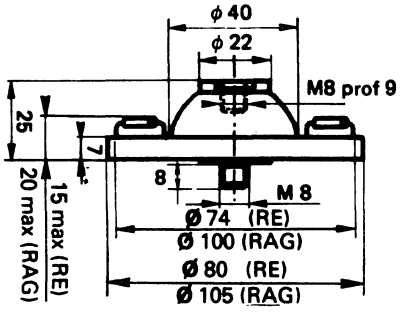

S545

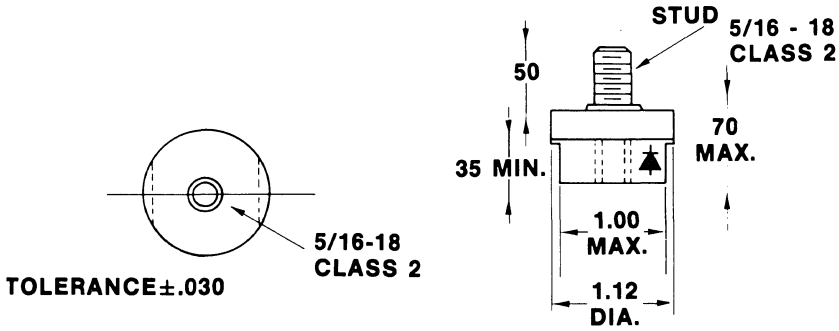

15. OUTLINE DRAWINGS

S546

NOTE:
1. DIMENSION P IS THREAD RELIEF, DIA.

DIM	MILLIMETERS MIN	MILLIMETERS MAX	INCHES MIN	INCHES MAX
A	16.94	17.45	0.667	0.687
B	–	16.94	–	0.667
C	–	11.43	–	0.450
D	12.70	14.73	0.500	0.580
F	1.65	2.16	0.065	0.085
H	1.52	–	0.060	–
J	10.72	11.51	0.422	0.453
K	107.95	120.65	4.250	4.750
L	16.38	18.03	0.645	0.710
P	5.59	6.32	0.220	0.249
Q	5.08	5.33	0.200	0.210

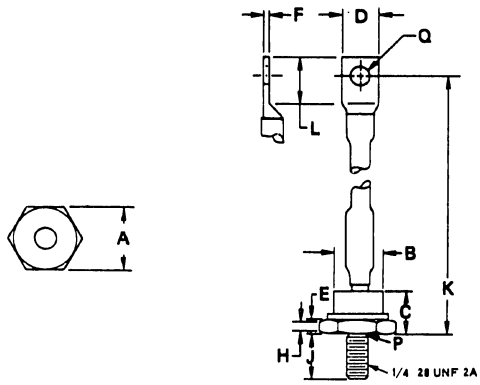

S547

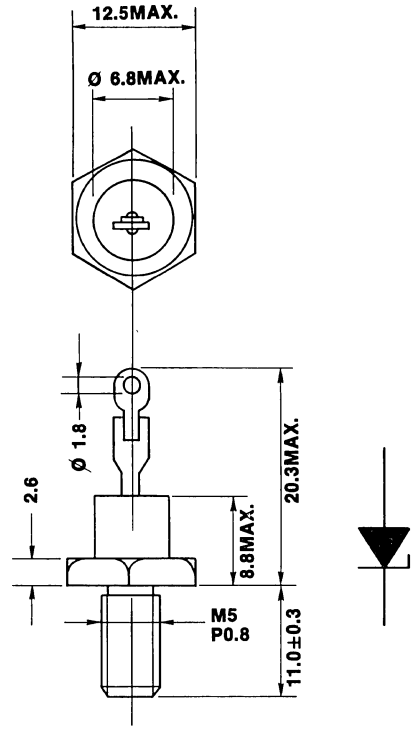

S548

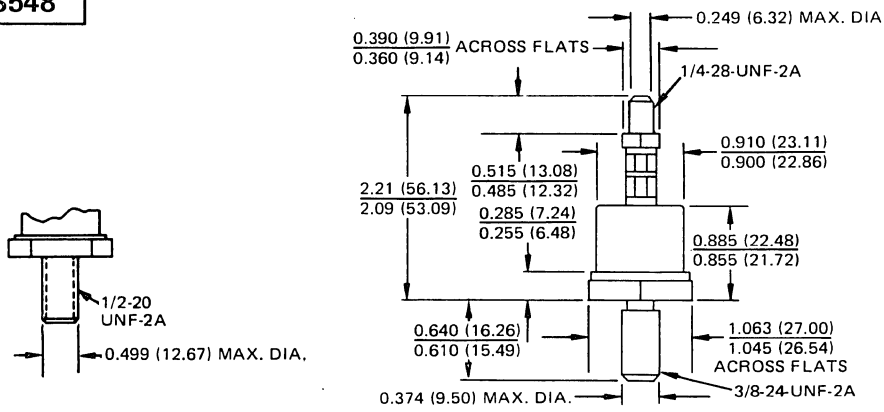

S549

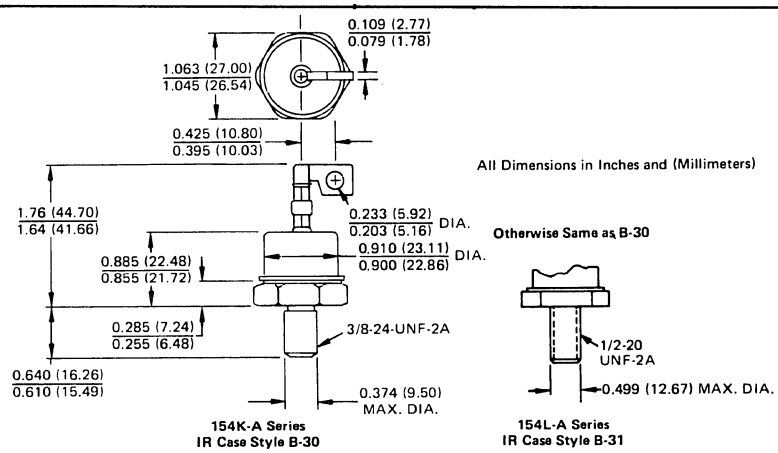

S550

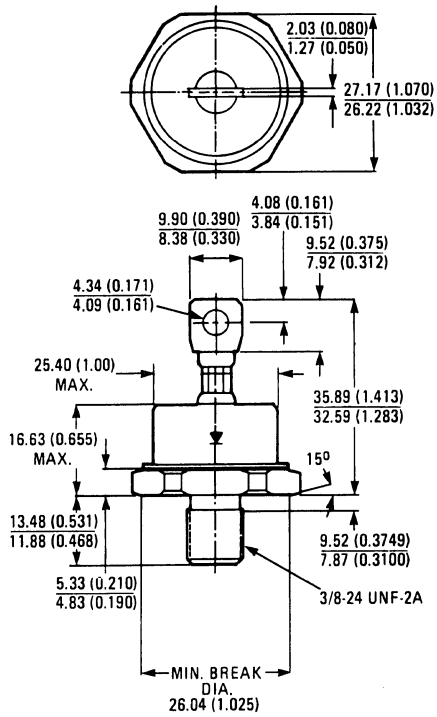

S571

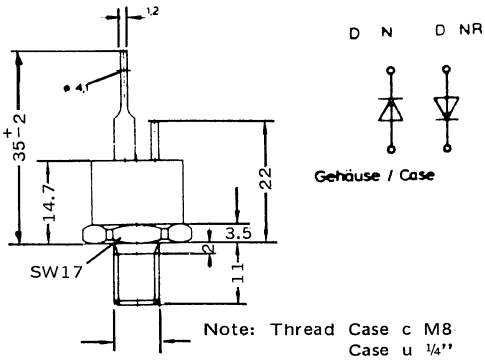

15. OUTLINE DRAWINGS

S551

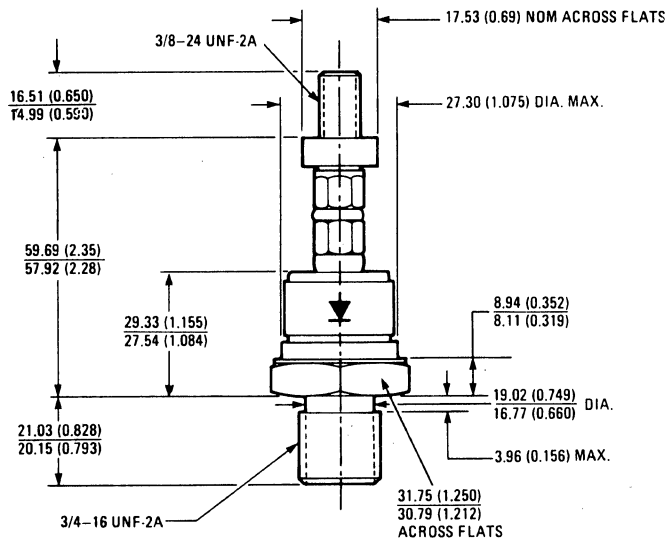

S552

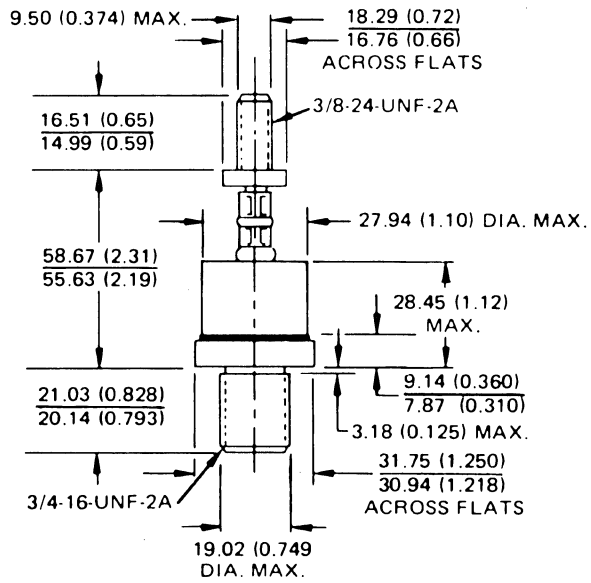

S553

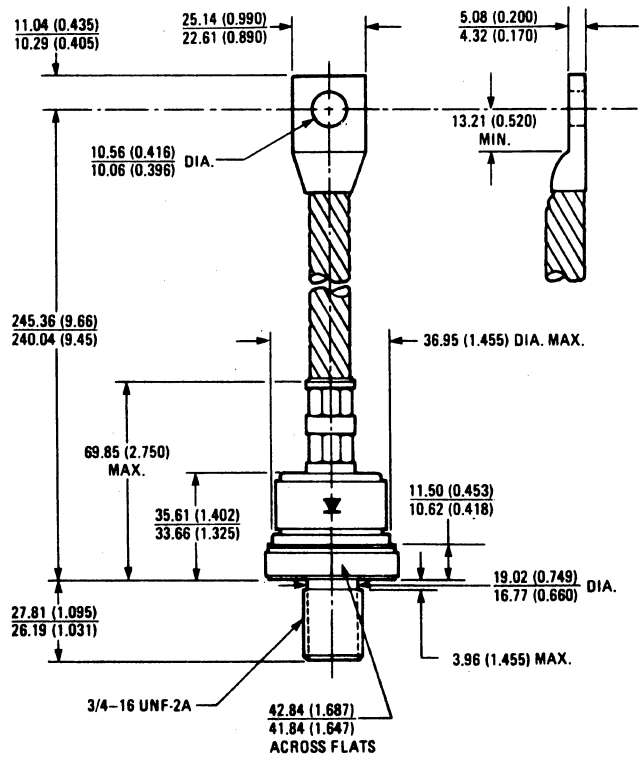

S554

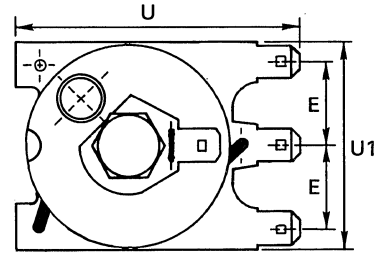

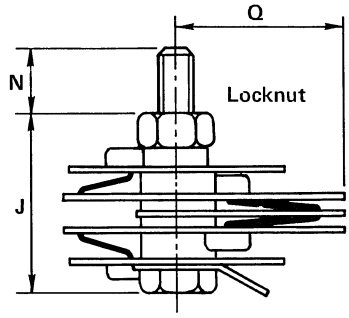

Ref	DIMENSIONS				Notes
	Millimeters		Inches		
	Min.	Max.	Min.	Max.	
E	15.24	15.62	0.600	0.615	
J	33.45	35.89	1.317	1.413	
N	9.2	13.46	0.362	0.530	2
Q	31.37	32.13	1.235	1.265	
U	51.62	53.13	2.032	2.092	
U_1	35.56	40.64	1.400	1.600	

15. OUTLINE DRAWINGS

S555

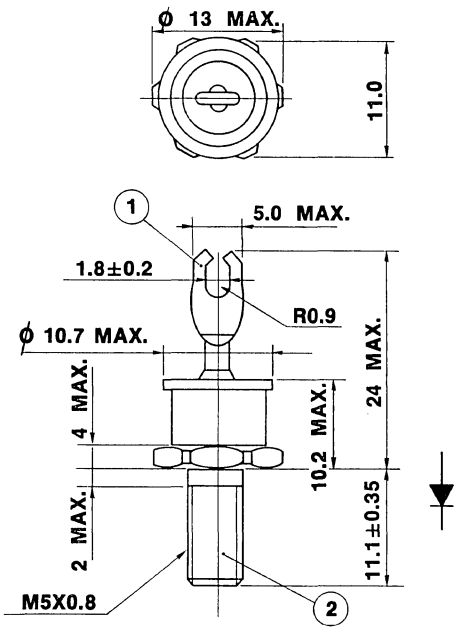

S556

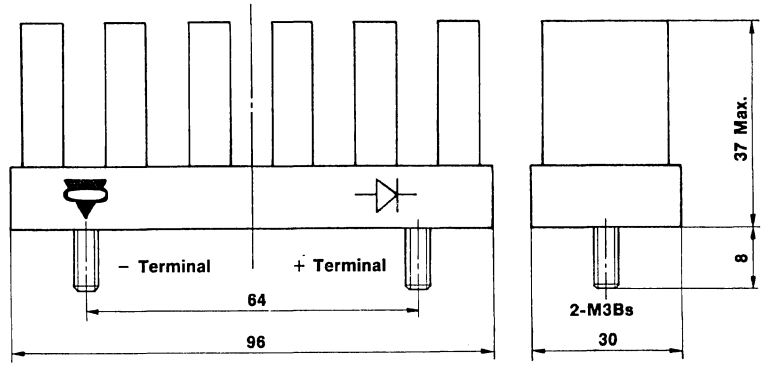

(Dimensions In "mm") Weight 100gr

S557

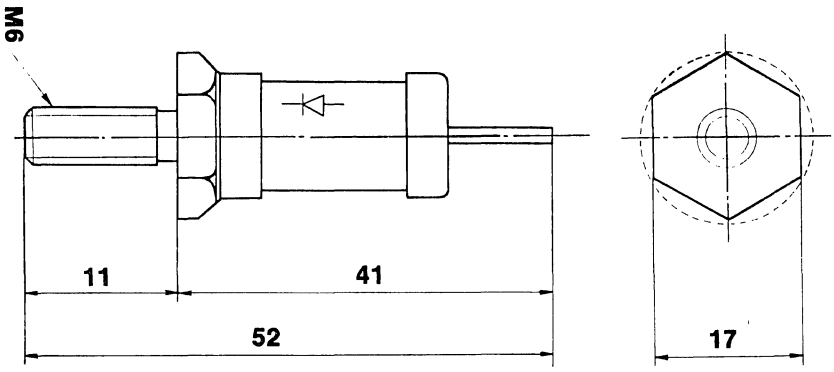

S559

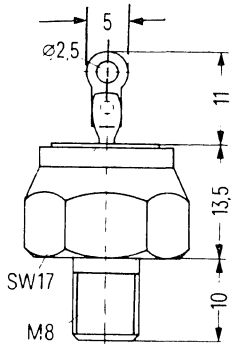

S561

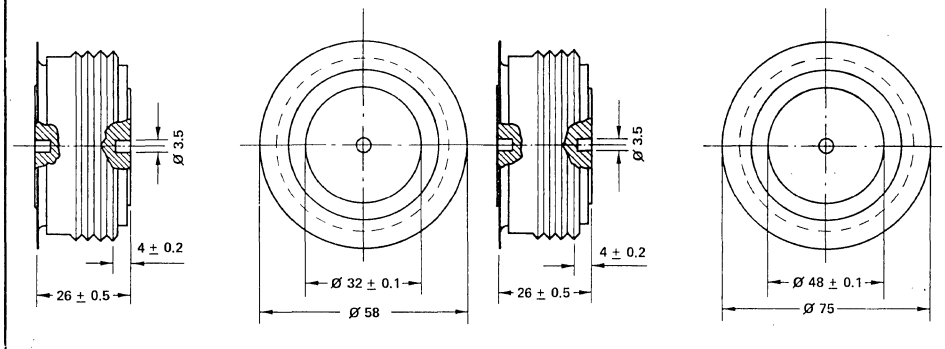

S560

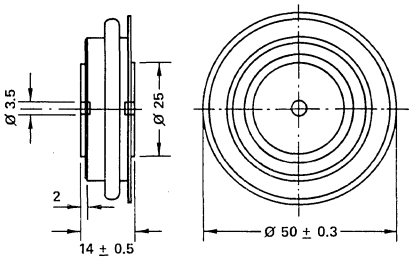

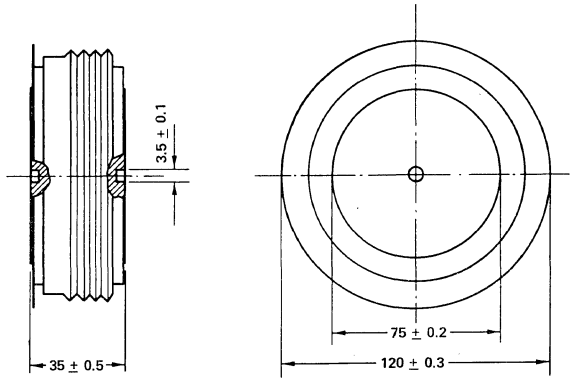

15. OUTLINE DRAWINGS

S562

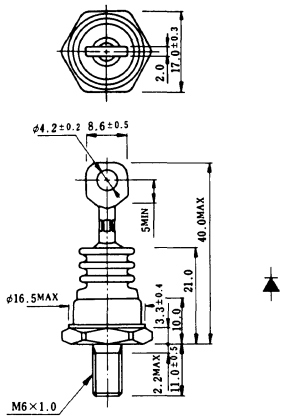

S563

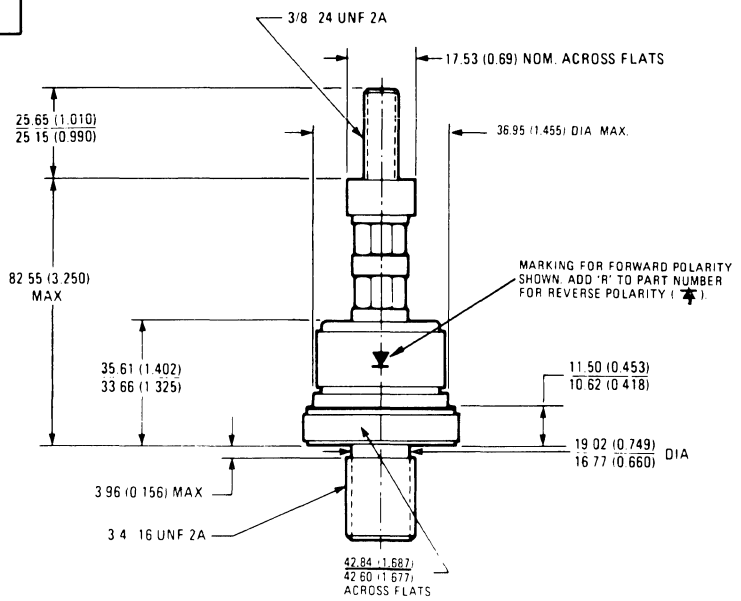

S564

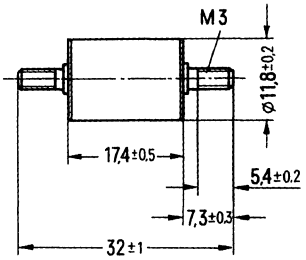

S567

Note D..N RED D..NR BLUE

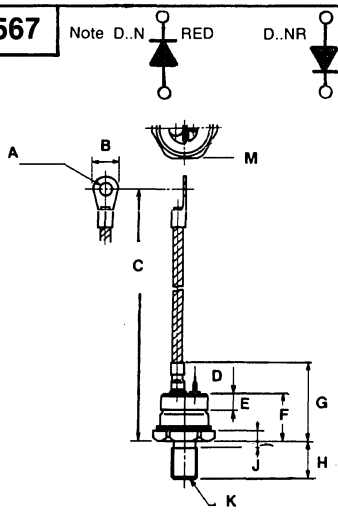

	A	B	C	D	E	F	G	H	J	K	M
S567	6.4	12	163	8.3	5	22.7	38.5	18	3	M12	27
S567a	6.5		120±5		5.5	14.7		11	2	M8	SW17

S568

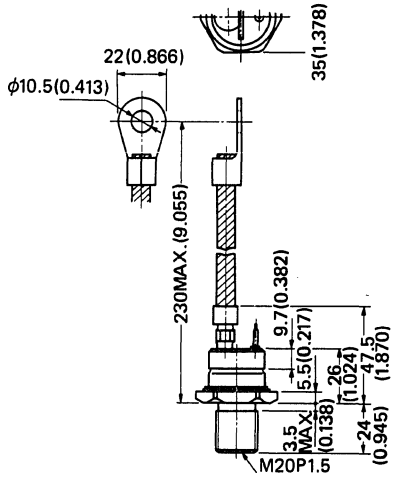

S565

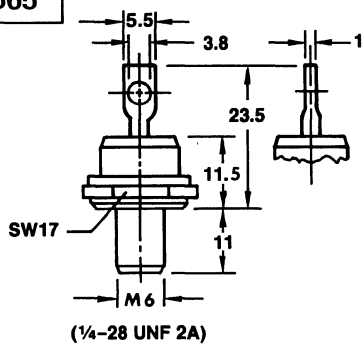

S565a - 10-32 UNF 2A THREADS

S565b - M_5 THREADS

S566

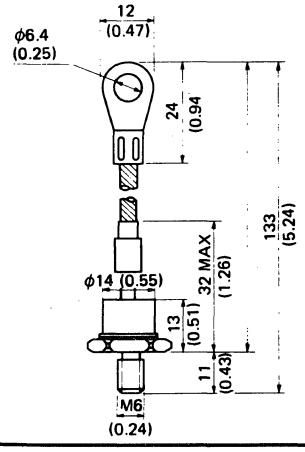

S569

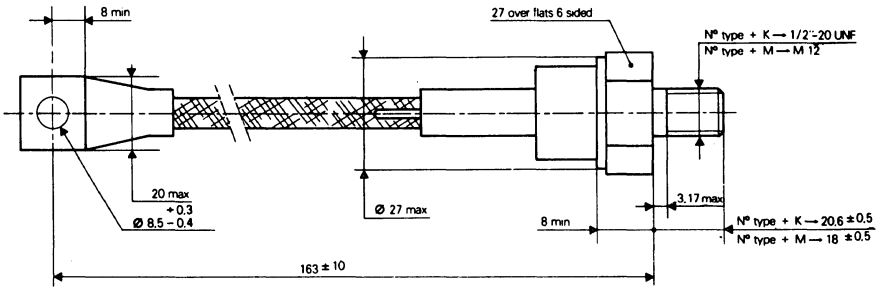

15. OUTLINE DRAWINGS

TO3

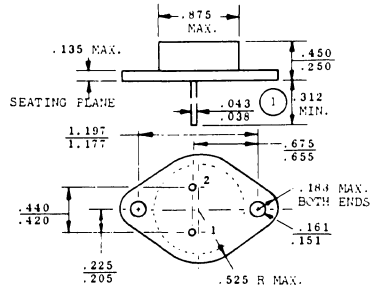

TO3 Note: 1. Two Leads

TO5

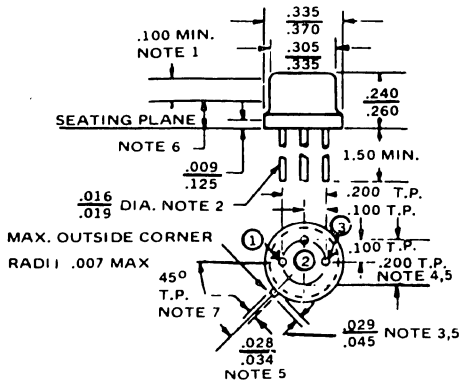

TO5 NOTES:

1. This zone is controlled for automatic handling. The variation in actual diameter within the zone shall not exceed .010.
2. The specified lead diameter applies in the zone between .050 and .250 from the seating plane. Between .250 and 1.5 a maximum of .021 diameter is held. Outside of these zones the lead diameter is not controlled.
3. Measured from max. diameter of the actual device.
4. Leads having maximum diameter (.019) measured in gauging plane .054+.001 - .000 below the seating plane of the device shall be within .007of their true locations relative to a maximum-width tab.
5. The device may be measured by direct methods or by the gauge and gauging procedure described on the base gauge drawing, GS-1.
6. Details of outline in this zone optional.
7. Tab centerline.

TO18

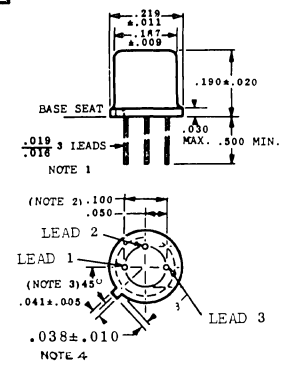

NOTES FOR TO18:

1. The specified lead dia. applies to the zone between .050 and .250 from the base seat. Between .250 and end of lead a max. of .021 is held. Outside of these zones the lead dia. is not controlled.
2. Leads having max. dia. of .019 measured in gaging plane .054 -.001,-.000 below the seating plane of the device shall be within .007 of their true positions relative to the max. tab width.
3. Index tab for visual orientation only.
4. Measured from max. dia. of the actual device.

TO33

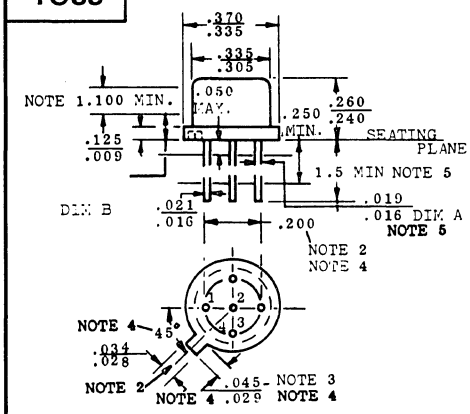

NOTES:

1. This zone is controlled for automatic handling. The variation in actual diameter within the zone shall not exceed 0.010.
2. Leads having max. dia. .019 measured in gaging plane .054 - .001 below the seating plane of the device shall be within .007 of their true locations.
3. Measured from max. dia. of the actual device.
4. The device may be measured by direct methods or by the gage and gaging procedure described on gage drawing GS-1.
5. All leads - Dia. is uncontrolled to .050 from seating plane and beyond min. tolerance of lead length (1.5 or .5) from seating plane. Dim. A applies between .050 and .250 from seating plane. Dim. B applies between .250 and min. tolerance of lead length from seating plane.

TO39

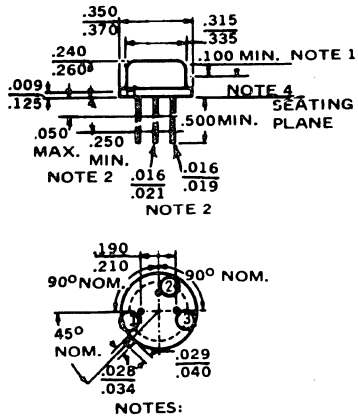

NOTES:

1. This zone is controlled for automatic handling. The variation in actual diameter within this zone shall not exceed .010".
2. (Three Leads) (Dim. .016 min. and .019 max.) applies between (.050 max.) and (.250 min.) (Dim. .016 min. and .021 max.) applies betwee (.250 min.) and .5" from seating plane. Diameter is uncontrolled in .050 max. and beyond .5" from seating plane.
3. Measured from max. diameter of the actual device.
4. Details of outline in this zone optional.

TO46

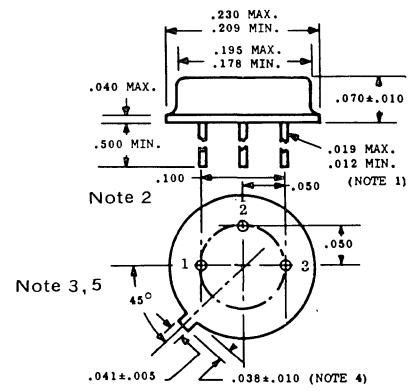

TO46 NOTES:

1. (Three Leads) (Dim. .012 min. and .019 max.) applies between (.050 max.) and (.250 min.). (Dim. .016 min. and .021 max.) applies between (.250 min.) and .5" from seating plane. Diameter is uncontrolled in (.050 max.) and beyond .5" from seating plane.
2. Maximum diameter leads at a gaging plane .054" and .001"-.000" below seating plane to be within .007" of their true position relative to maximum-width tab and to the maximum .230" diameter measured with a suitable gage. When gage is not used, measurement will be made at seating plane.
3. Index tab for visual orientation only.
4. Measured from maximum diameter of the actual device.
5. Tab centerline.

15. OUTLINE DRAWINGS

TO52

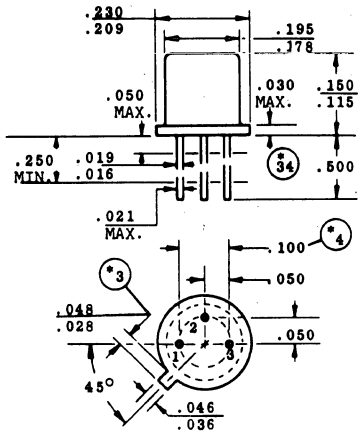

NOTES:

3. Measured from maximum diameter of the actual device.
4. Leads having maximum diameter .019 (.483MM) measured in gauging plane .054 + .001 — .000 (1.37MM + .025MM — .000MM) below the seating plane of the device shall be within .007 (.178MM) of their true locations.
34. (All leads) Diameter is uncontrolled to .050 from seating plane and beyond minimum tolerance of lead length (1.5 or .5) from seating plane. Dim A applies between .050 and .250 from seating plane. Dim B applies between .250 and minimum tolerance of lead length from seating plane.

TO66

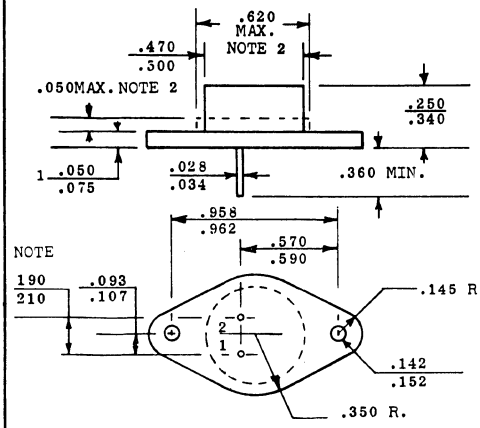

NOTES FOR TO66:

1. Dimension does not include sealing flanges.
2. The outline contour is optional within zone defined by these dimensions.

TO71

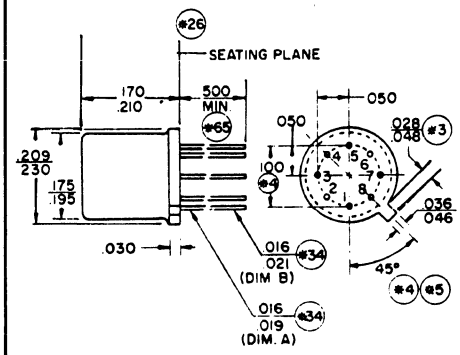

TO72

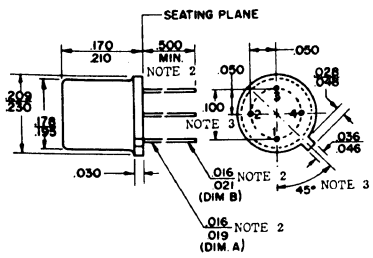

NOTES:

1. (Four leads). Maximum number of leads omitted in this outline, None (0). The number and position of leads actually presented are indicated in the product registration. Outline designation determined by the location and minimum angular or linear spacing of any two adjacent leads.

2. (All Leads). Dimension .016 Min. and .019 Max. applies between .050 Min. and .250 Max. Dimension .016 Min. and .021 Max. applies between .250 Min. and .500" (12.70 MM) from seating plane. Diameter is uncontrolled in .050 Max. and beyond .500" (12.70 MM) from seating plane.

3. Leads have maximum diameter .019 measured in gaging plane .054 (1.34MM) - .001 (.025 MM) - .000 (.000 MM) below the seating plane of the product shall be within .007 (.178 MM) of their true position relative to a maximum width tab.

TO78

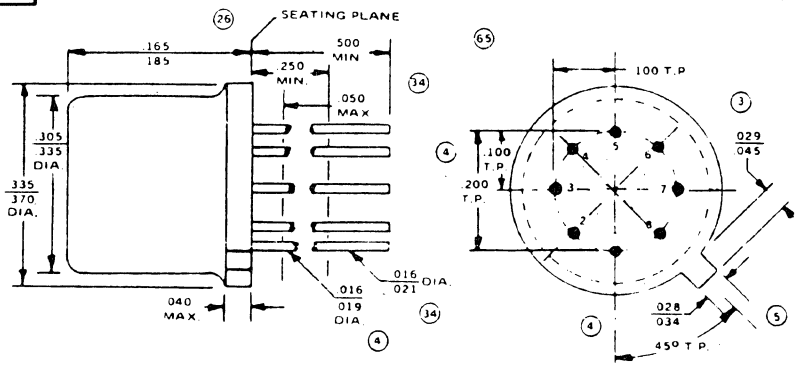

TO86

SYMBOL	INCHES MIN.	INCHES MAX.	MILLIMETERS MIN.	MILLIMETERS MAX.	NOTE
A	.030	.070	.762	1.77	
b	.010	.019	.254	.482	1
b_1	.003	.008	.077	.152	1
D	.240	.275	6.10	6.98	
d	.005	.035	.127	.889	
E	.240	.260	6.10	6.60	4
e	.045	.055	1.15	1.39	2,4
e_1	.095	.105	2.42	2.66	2,4
e_2	.145	.155	3.69	3.93	2,3,4
k	-	.015	-	.381	5
L	.070	-	1.78	-	
L_1	-	.015	-	.381	1

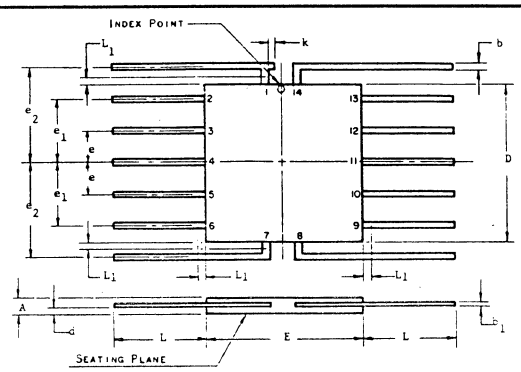

NOTES:

1. LEAD DIMENSIONS UNCONTROLLED IN THIS ZONE TO ALLOW FOR BODY AND LEAD FINISH IRREGULARITIES.
2. LEADS MISSING FROM THEIR DESIGNATED POSITIONS SHALL ALSO BE COUNTED WHEN NUMBERING LEADS FOR SPECIFIC APPLICATIONS.
3. SPACING AND ANGLE OF THE END LEADS AT THE POINT OF EMERGENCE OF BODY IS NOT CONTROLLED.
4. LEAD SPACING SHALL BE MEASURED WITHIN .030 (.762 MM) FROM THE POINT OF EMERGENCE FROM THE BODY OR, AS IN THE CASE OF END LEAD, FROM THE POINT WHERE THE EXTENSION OF THE BODY OUTLINE INTERSECTS THE END LEADS.
5. MECHANICAL INDEX, OPTIONAL

4-6-80

15. OUTLINE DRAWINGS

TO92

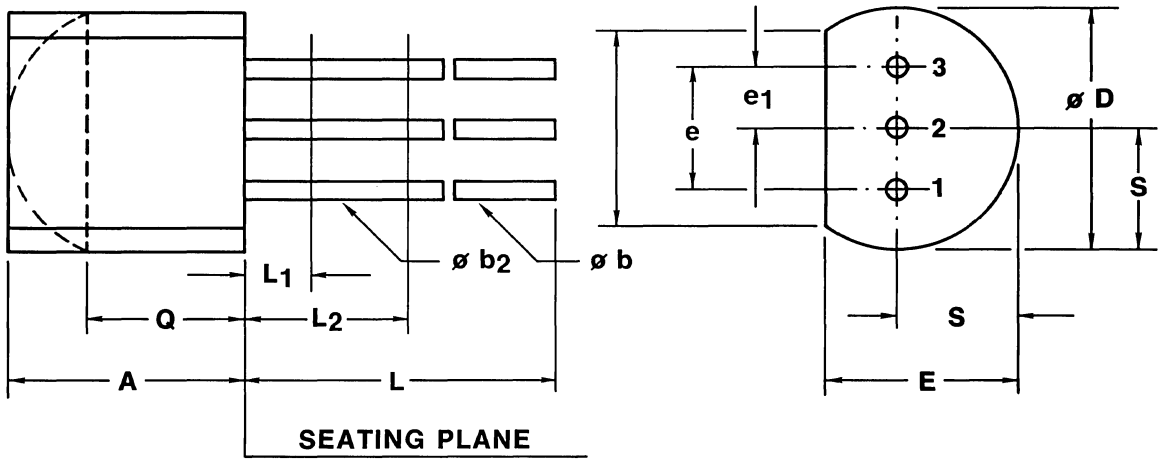

SYMBOL	INCHES MIN.	INCHES MAX.	MILLIMETERS MIN.	MILLIMETERS MAX.	NOTES
A	.170	.210	4.58	5.33	
Ob	.016	.021	.407	.533	1, 3
Ob_2	.016	.019	.407	.482	3
OD	.175	.205	4.96	5.20	
E	.125	.165	3.94	4.19	
e	.095	.105	2.42	2.66	
e_1	.045	.055	1.15	1.39	
j	.135		3.43		
L	.500		12.70		1, 3
L_1		.050		1.27	3
L_2	.250		6.35		3
Q	.115		2.93		2
S	.080	.105	2.42	2.66	

NOTES:

1. Three leads
2. Contour of the package beyond this zone is uncontrolled.
3. (Three leads) Ob_2 applies between L_1 and L_2. Ob applies between L_2 and .5″ (12.70 mm) from seating plane. Diameter is uncontrolled in L_1 and beyond .5″ (12.70 mm) from seating plane.

TO106

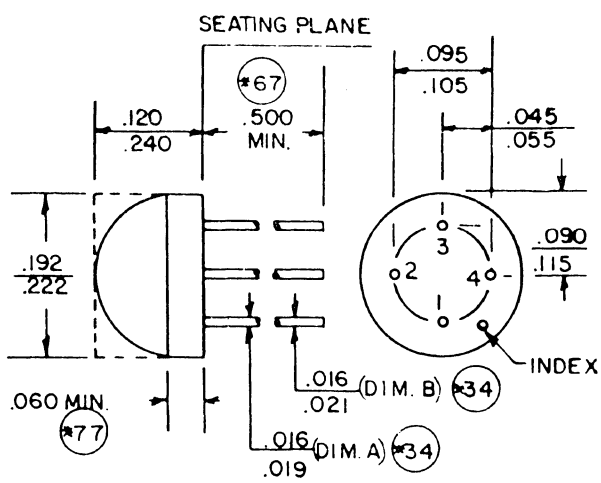

NOTES:

34. (ALL LEADS) DIAMETER IS UNCONTROLLED TO .050 FROM SEATING PLANE AND BEYOND MINIMUM TOLERANCE OF LEAD LENGTH (1.50 OR .500) FROM SEATING PLANE. DIM A APPLIES BETWEEN .050 AND .250 FROM SEATING PLANE. DIM B APPLIES BETWEEN .250 AND MINIMUM TOLERANCE OF LEAD LENGTH FROM SEATING PLANE.

67. (FOUR, SIX, TEN, OR TWELVE LEADS). MAXIMUM NUMBER OF LEADS OMITTED IN THIS OUTLINE, ONE (1). THE NUMBER AND POSITION OF LEADS ACTUALLY PRESENT ARE INDICATED IN THE PRODUCT REGISTRATION. OUTLINE DESIGNATION DETERMINED BY THE LOCATION AND MINIMUM ANGULAR SPACING OF ANY TWO ADJACENT LEADS.

76. CONTOUR OF THE PACKAGE BEYOND THIS ZONE IS UNCONTROLLED.

15. OUTLINE DRAWINGS

TO105

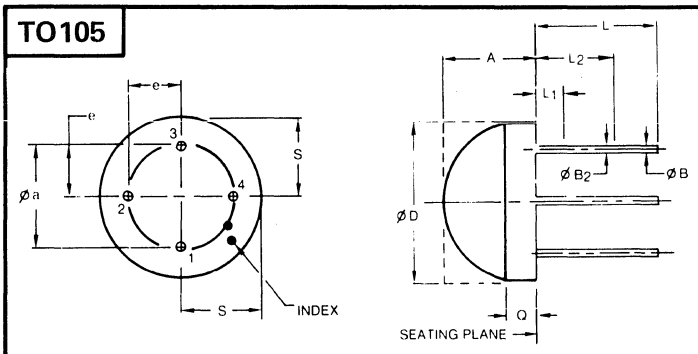

MILLIMETER DIMENSIONS ARE DERIVED FROM BASIC INCH DIMENSIONS

SYMBOL	INCHES MIN.	INCHES MAX.	MILLIMETERS MIN.	MILLIMETERS MAX.	NOTES
A	120	240	3 1	6 0	
O a	190	210	4 83	5 33	
O B	016	021	407	533	1, 2
O B2	016	019	407	482	1, 2
O D	305	325	7 75	8 25	
e	090	110	2 29	2 79	
L	500	-	12 70	-	1, 2
L1		050	-	1 27	1, 2
L2	250	•	6 35	-	1, 2
Q	060		1 53	-	3
S	145	165	3.69	4 19	

NOTES

1 MAXIMUM NUMBER OF LEADS THAT MAY BE OMITTED IN THIS OUTLINE ONE
(1) THE NUMBER AND POSITION OF LEADS ACTUALLY PRESENT ARE INDICATED IN THE PRODUCT REGISTRATION

2 O B2 APPLIES BETWEEN L1 AND L2 O B APPLIES BETWEEN L2 AND L DIAMETER IS NOT CONTROLLED IN L1

3 CONTOUR OF PACKAGE BEYOND THIS ZONE IS OPTIONAL, BUT MUST BE WITHIN O AND A

4 VISUAL OR MECHANICAL INDEX IS OPTIONAL IF ONE LEAD IS OMITTED

TO116

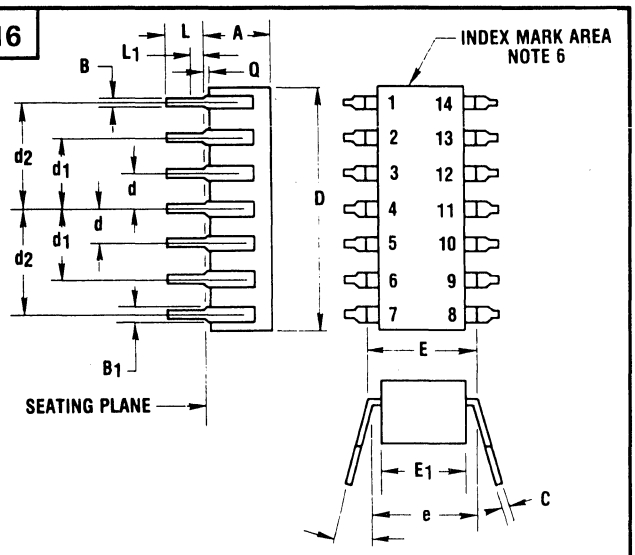

MILLIMETER DIMENSIONS ARE DERIVED FROM BASIC INCH DIMENSIONS

SYMBOL	INCHES MIN.	INCHES MAX.	MILLIMETERS MIN.	MILLIMETERS MAX.	NOTES
A	-	.200	-	5.08	
B	.015	.023	.381	.584	3,7
B_1	.030	.070	.77	1.77	3,7
C	.008	.015	.204	.381	3
D	.660	.785	17.4	19.9	
d	.090	.110	2.29	2.79	1
d_1	.190	.210	4.83	5.33	1
d_2	.290	.310	7.37	7.87	1
E	-	.325	-	8.25	5
E_1	.220	.280	5.59	7.11	
e	.290	.310	7.37	7.87	4
L	.100	-	2.540	-	1,3
L_1	-	.030	-	.76	2
Q	.020	-	.51	-	
a	0°	15°	0°	15°	

TO236

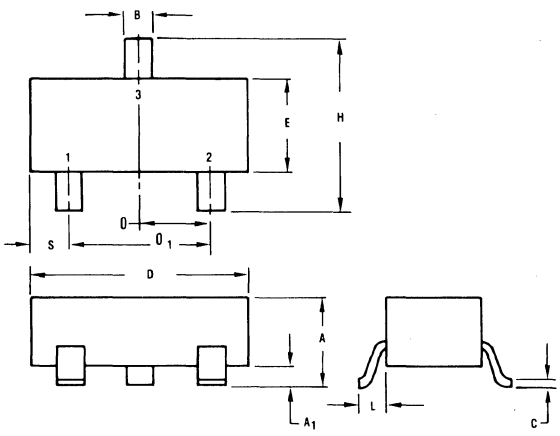

NOTES:

1. REFER TO APPLICABLE SYMBOL LIST.
2. DIMENSIONING & TOLERANCING PER ANSI Y14.5-1973.
3. CONTROLLING DIMENSION: MILLIMETERS.
4. DIMENSION S APPLIES AT BOTH ENDS.

SYMBOL	AA MIN.	AA MAX.	NOTE
A	.80	1.2	
A_1	.10	.25	
B	.37	.43	
c	.085	.115	
D	2.80	3.04	
E	1.20	1.40	
e	.95	1.05	
e_1	1.78	2.05	
H	2.10	2.50	
L	.45	.60	
S	.45	.60	4

TO247

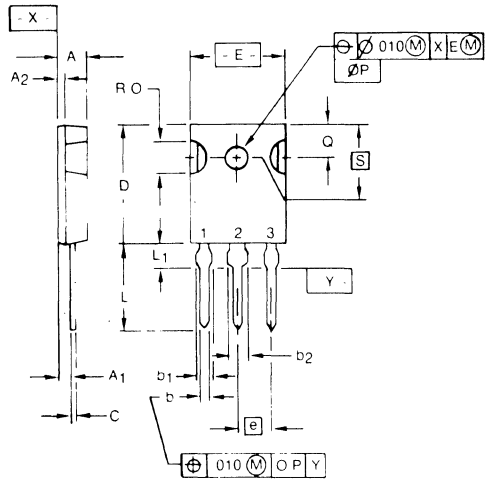

SYMBOL	MIN.	AA	MAX.	NOTE
A	.185		.209	
A_1	.087		.102	
A_2	.059		.098	
b	.040		.055	4
b_1	.079		.094	4
b_2	.118		.133	
c	.016		.031	
D	.776		.799	
E	.602		.625	
e		.215 BSC		
L	.559		.582	
L_1	.146		.169	
Op	.118		.133	
Q	.209		.224	
OR	.178		.216	
S		.217 BSC		

15. OUTLINE DRAWINGS

u3

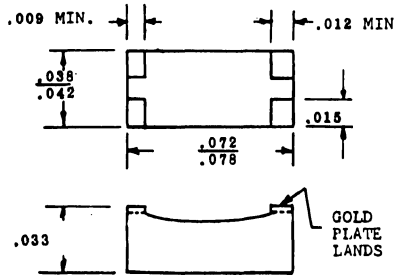

u4

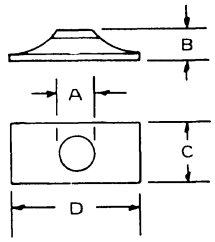

	A	B	C	D
u4	.006	.005	.013	.015
u4a	.009	.005	.017	.019
u4b	.015	.007	.022	.026

u5

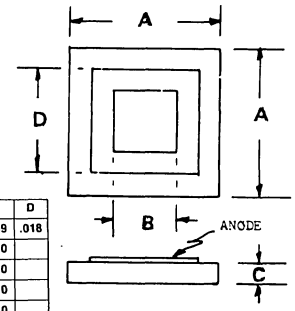

	A	B	C	D
U5	.025	.011	.009	.018
U5a	.030	.020	.010	
U5b	.040	.028	.010	
U5c	.085	.072	.010	
U5d	.115	.100	.010	
U5e	.220 x	.115	.010	
U5f	.055	.040	.010	
U5g	.220	.205	.010	
U5h	.260	.250	.010	

u10

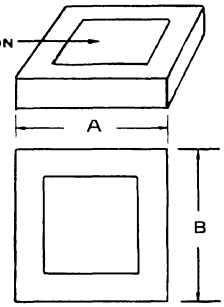

	A	B	C
u10	.034 .040	.034 .040	.010 MAX
u10a	.029 .035	.029 .035	.010 MAX
u10b	.058 .062	.058 .062	.008 .010
u10c	.082 .086	.082 .086	.008 .010
u10d	.098 .102	.098 .102	.008 .010
u10e	.138 .142	.138 .142	.008 .010
u10f	.048 .052	.048 .052	.009 .010
u10g	.070 .074	.070 .074	.009 .010
u10h	.113 .117	.113 .117	.009 .010
u10j	.158 .162	.158 .162	.009 .010

u11

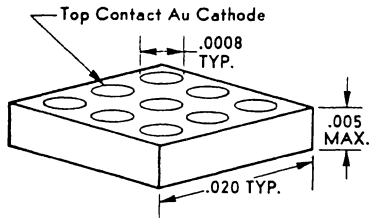

u12

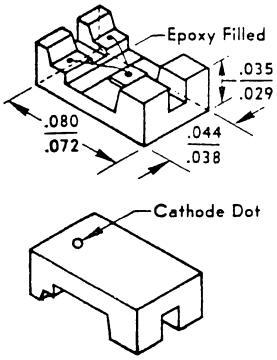

u19

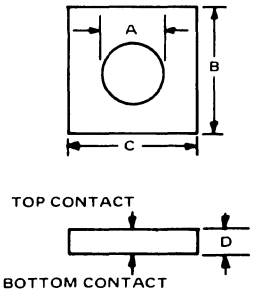

	A	B	C	D	TOP CONTACT	BOTTOM CONTACT
u19	.0008 TYP	.015	.015	.004	Ag Cathode	Au Anode
u19a	.004	.015	.015	.0052	Ag Anode	Au Cathode
u19b	.003	.015	.015	.005	Au Anode	Au Cathode
u19c	.0026	.015	.015	.005	Ag Anode	Au Cathode
u19d	.009	.020	.020	.0032	Ag Cathode	Au Anode
u19e	.009	.020	.020	.006	Ag Cathode	Au Anode
u19f	.009	.020	.020	.0092	Ag Cathode	Au Anode
u19g	.004	.015	.015	.0035	Au Cathode	Au Anode
u19h	.0008	.015	.015	.0052	Au Anode	Au Cathode
u19j	.0028	.015	.015	.0052	Au Anode	Au Cathode
u19k	.0036	.015	.015	.0052	Au Anode	Au Cathode
u19l	.0008	.015	.015	.004	Au Cathode	Au Anode
u19m	.002	.015	.015	.0052	Ag Anode	Au Cathode
u19n	.004	.015	.015	.0036	Au Cathode	Au Anode
u19p	.004	.015	.015	.0036	Au Anode	Au Cathode

u20

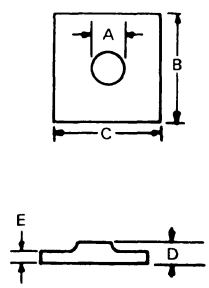

	In.	m.m.	A	B	C	D	E
u20		X	.078	.590	.590	.157	
u20a		X	.157	.590	.590	.157	
u20b		X	.098	.590	.590	.157	
u20c	X		.002 MIN	.020	.020	.005 MIN	
u20d	X		.002 MIN	.012	.012	.005 MIN	
u20e	X		.001 .007	.020 .030	.020 .030		.005
u20f	X		.012 .029	.020 .030	.020 .030		.005
u20g	X			.015 .050	.015 .050		.003 .005
u20h	X		.002 MIN	.017 .023	.017 .023	.003 .005	
u20j	X		.017 .024	.037 .041	.037 .041	.0120 .0130	
u20k		X	.100	.380	.380	.130	

u23

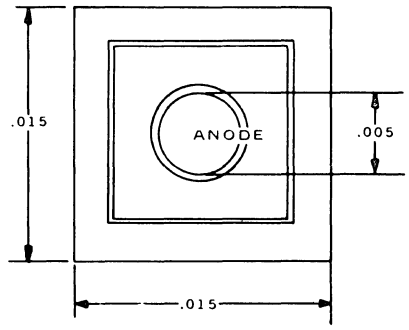

u25

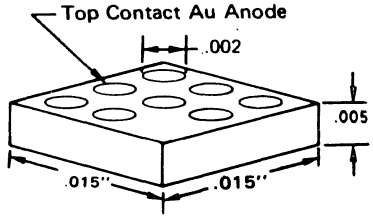

15. OUTLINE DRAWINGS

u26

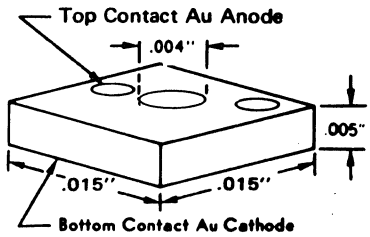

u27

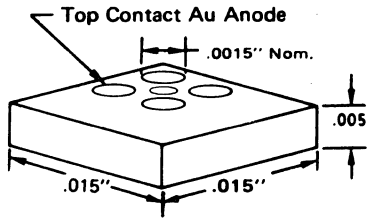

u35

Suffix	A	B	C	D	E
u36	2.29m	2.29m	2.03m	.203m	
u36a	1.52m	1.52m	1.32m	.203m	
u36b	.94m	.94m	.76m	.203m	.53m
u36c	.94m	.94m	.76m	.203m	.58m

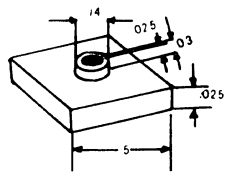

DIMENSIONS IN "MM"

	BASE POLARITY
u35	Anode
u35a	Cathode

u36

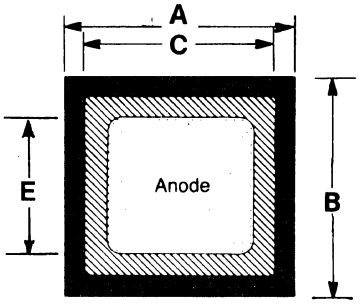

Backside: Cathode

u37

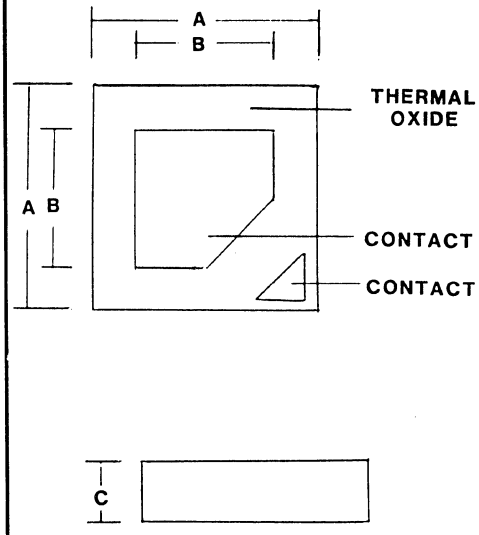

Suffix	A	B	C
U37a	.035"-.038"	.021"-.023"	.011"-.015"
U37b	.027"-.030"	.014"-.016"	.011"-.015"

u38

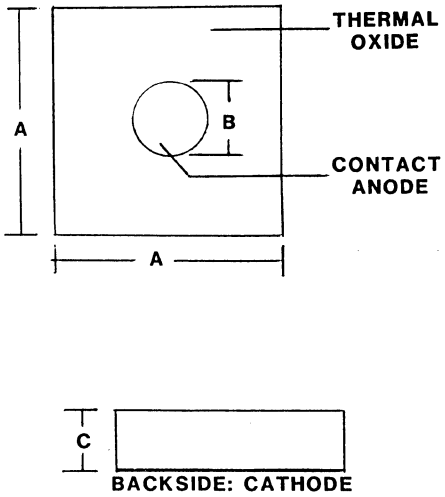

Suffix	A	B	C
U38a	.015" Nom.	.005" Nom.	.008" Nom.
U38b	.015" Nom.	.003" Nom.	.008" Nom.

u39

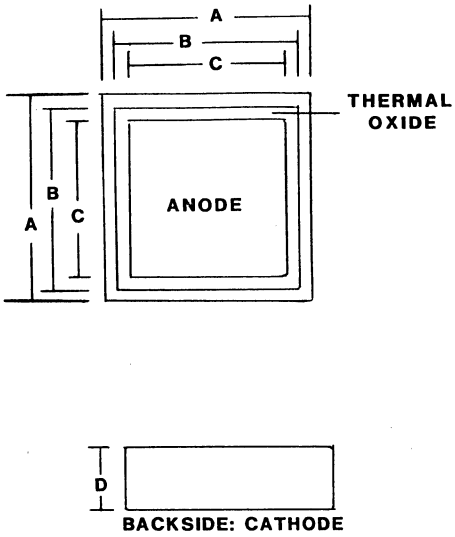

	U39a	U39b
A	.024"-.026"	.059"-.061"
B	.020"-.022"	.055"-.057"
C	.016"-.018"	.044"-.046"
D	.009"-.013"	.009"-.013"

15. OUTLINE DRAWINGS

u40

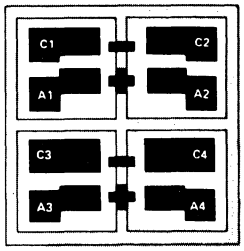

25.0 x 25.0 MILS

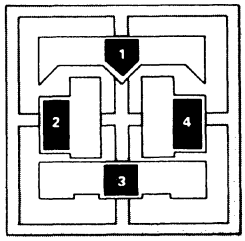

25.0 x 25.0 MILS

u41

17.0 x 17.0 MILS

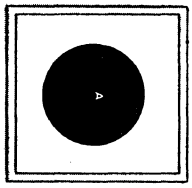

19.0 x 19.0 MILS

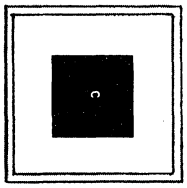

u42

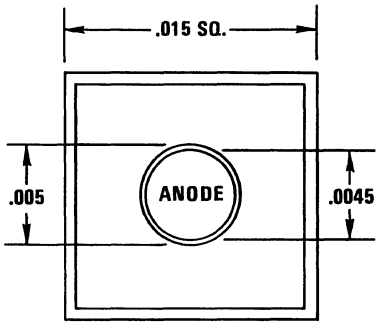

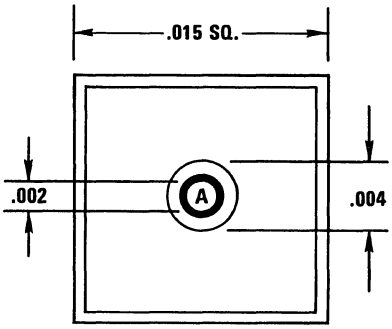

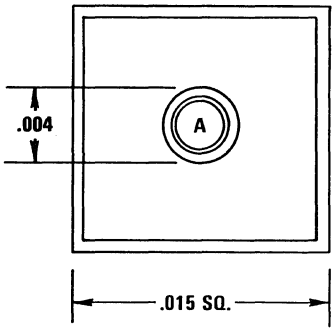

u43

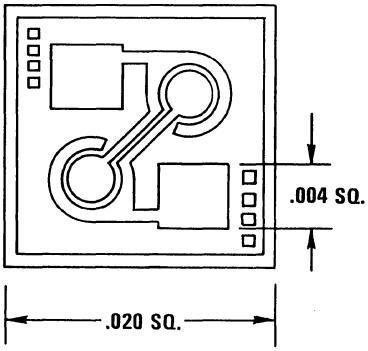

u44

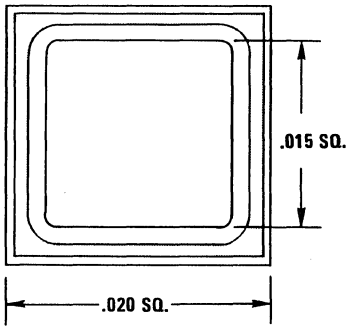

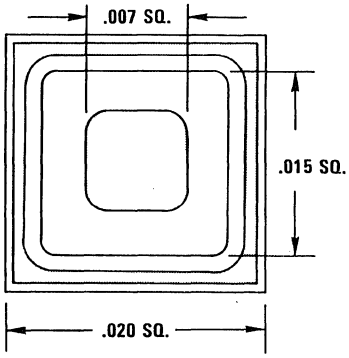

u45

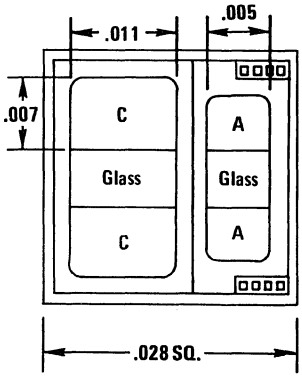

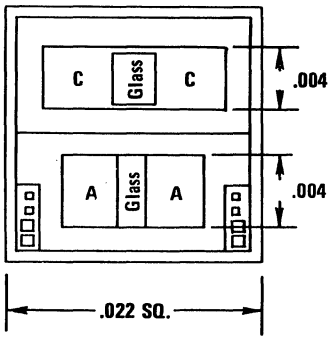

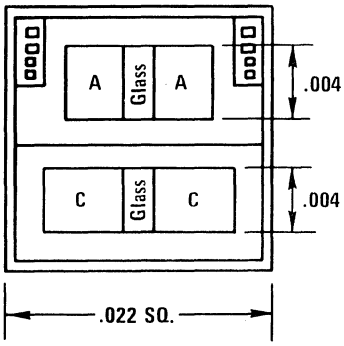

15. OUTLINE DRAWINGS

u46

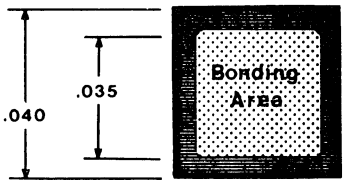

u47

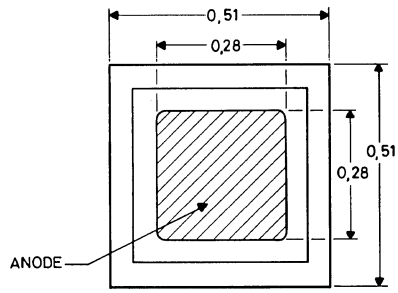

u48

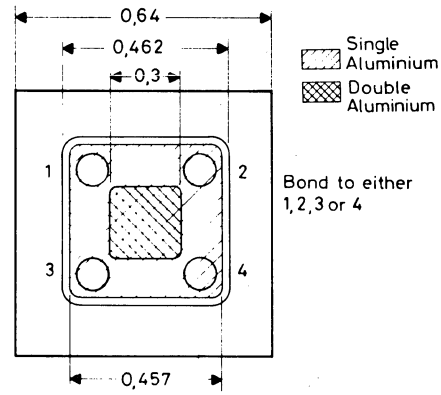

u49

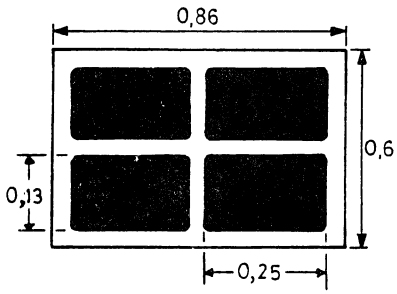

u53

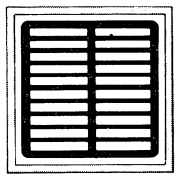

u53	110 x 110 MILS
u53a	75 x 75 MILS

u50

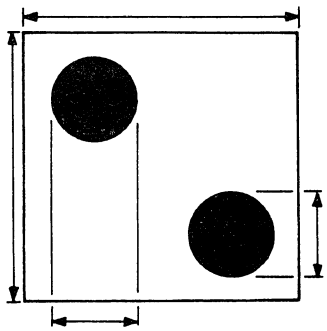

	In.	m.m.	A	B	C	D
u50		X	.380	.380	.100	.100
u50a		X	.430	.430	.100	.100

u52

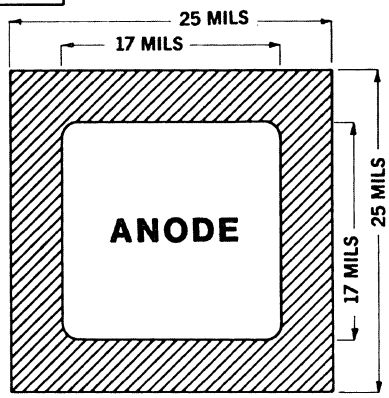

BACKSIDE IS CATHODE

FIGURE 1

DESIGN DATA

METALLIZATION:
Top: (Anode)..... Al
Back: (Cathode)..... Au

GOLD THICKNESS...3000 Å Min

CHIP THICKNESS...15 Mils Max

CIRCUIT LAYOUT DATA:
For zener operation, cathode must be operated positive with respect to anode.

u51

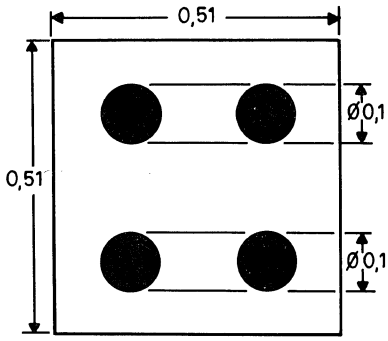

15. OUTLINE DRAWINGS

V1

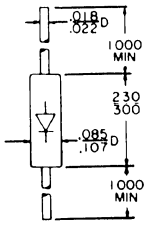

Cp= 10pF Lp=150nH

Style 015

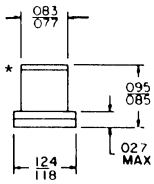

Cp= 15pF Lp= 42nH

Style 100

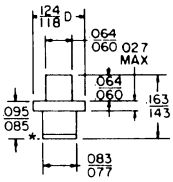

Cp= 15pF Lp= 42nH

Style 101

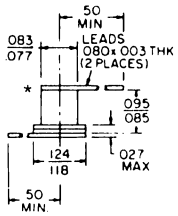

Cp= 15pF Lp= 42nH

Style 111

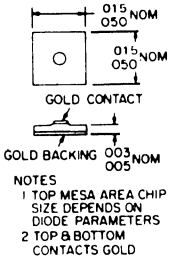

Style 000

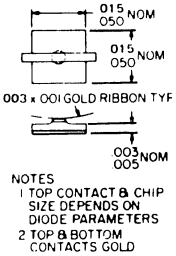

Style 001

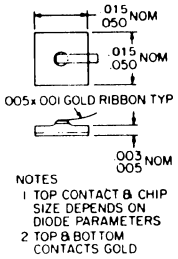

Style 002

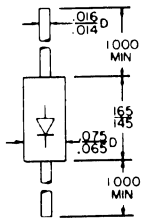

Cp= 07pF Lp=10nH

Style 011

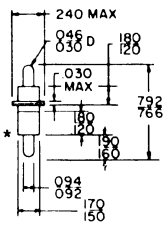

Cp= 50pF Lp= 80nH

Style 200

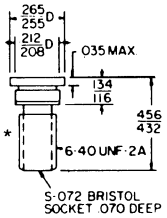

Cp= 75pF Lp= 60nH

Style 250

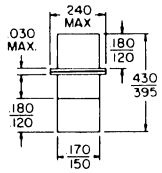

Cp= 50pF Lp= 80nH

Style 290

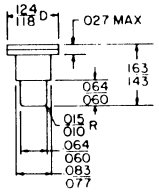

Cp= 18pF Lp= 42nH

Style 300

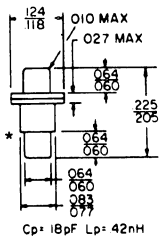

Cp= 18pF Lp= 42nH

Style 301

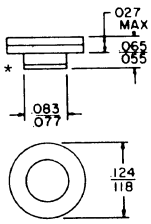

Cp=.23pF Lp=.30nH

Style 400

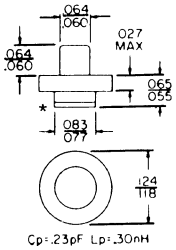

Cp=.23pF Lp=.30nH

Style 401

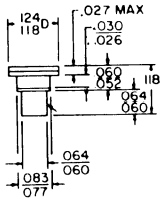

Cp=.34pF Lp= 30nH

Style 450

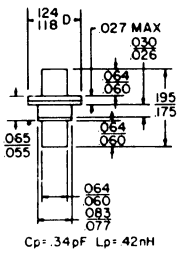

Cp=.34pF Lp= 42nH

Style 451

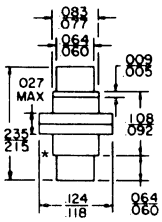

Cp=.17pF Lp=.55nH

Style 452

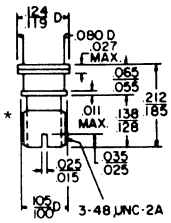

Cp=.20pF Lp= 40nH

Style 500

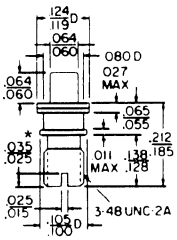

Cp= 20nH Lp=.40nH

Style 501

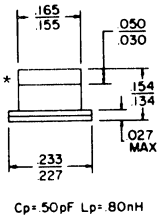

Cp= 50pF Lp=.80nH

Style 550

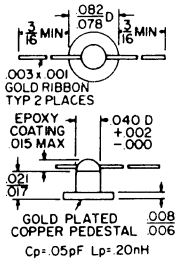

Cp= .05pF Lp= .20nH

Style 700

Cont'd on next page

*—HEAT SINK END

NOTE: USE STYLE NUMBERS AS TYPE NUMBER SUFFIX FOR PACKAGE VARIATION DESIRED.

15. OUTLINE DRAWINGS

V1 Cont'd

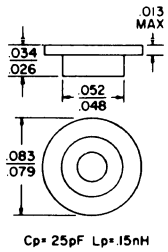

Style 800

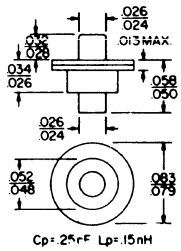

Style 801

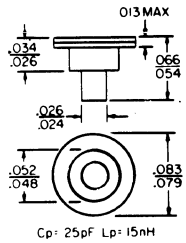

Style 802

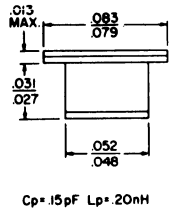

Style 880

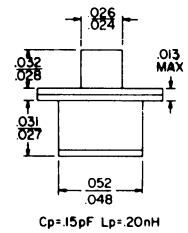

Style 881

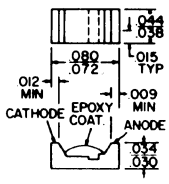

Style 901

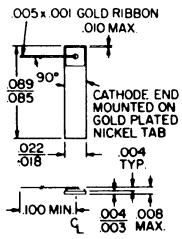

Style 920

* — HEAT SINK END

NOTE: USE STYLE NUMBERS AS TYPE NUMBER SUFFIX FOR PACKAGE VARIATION DESIRED.

Y200 SERIES

THE Y200 SERIES (Y200 & HIGHER) REPRESENTS THE TO200 SERIES, WITH THE PREFIX "TO" REPLACED BY "Y" FOR SPACE-SAVING PURPOSES. THESE DRAWINGS ARE LOCATED IN ORDER IN THE "TO" SERIES.

Y218/T0218

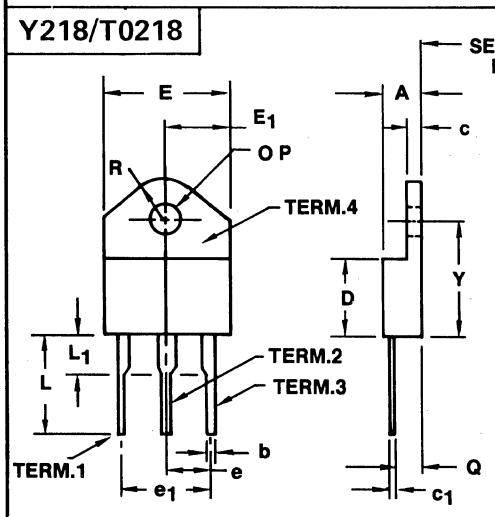

FIG. A

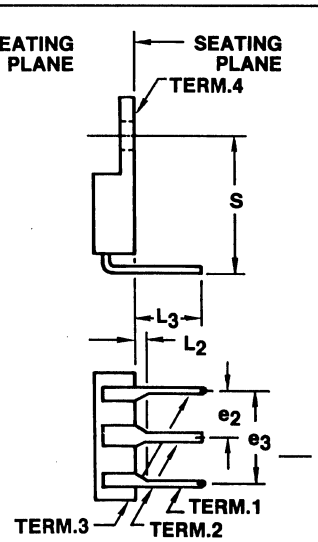

FIG. B

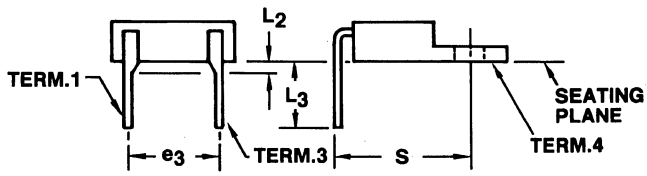

FIG. C

SYMBOL	AA MIN.	AA MAX.	NOTE	AB MIN.	AB MAX.	NOTE	AC MIN.	AC MAX.	NOTE	AD MIN.	AD MAX.	NOTE	AE MIN.	AE MAX.
	VARIATIONS (ALL DIMENSIONS SHOWN IN INCHES)													
A	.170	.195		.170	.195		.165	.200		.165	.195		.181	.181
b	.045	.055		.045	.065		.040	.063		.040	.055		.197	.020
C	.040	.060		.040	.060		.053	.045		.040	.065		.078	.079
C_1	.012	.018		.012	.018		.018	.030		.012	.030		.015	.016
D	.405	.425		.406	.425		.485	.505		.405	.505		.500	.500
E	.580	.620		.580	.620		.610	.640		.580	.640		.598	.600
E_1	.290	.310		.290	.310		.305	.320		.290	.320		.299	.300
e	.205	.225		–	–		.205	.225		–	–		.216	.217
e_1	.420	.440		–	–		.420	.440		–	–		.433	.433
e_2	–	–		.205	.225		–	–		–	–		–	–
e_3	–	–		.420	.440		–	–		.420	.440		–	–
L	.470	–		–	–		.500	.610		–	–		.535	.535
L_1	.110	.135		–	–		–	.125		–	–		.086	.087
L_2	–	–		–	.050		–	–		–	.050		–	–
L_3	–	–		.312	–		–	–		.312	–		.448	.449
OP	.151	.161		.151	.161		.157	.167		.151	.167		.167	.167
Q	.110	.135		.110	.135		.094	.126		.094	.135		.062	.063
R	.170	.190		.170	.190		.170	.190		.170	.190		.163	.163
S	–	–		.555	.675		–	–		.655	.675		–	–
Y	.530	.570		.530	.570		.626	.670		–	–		.657	.657
NOTE	1,2,3,11 (FIG A)			1,2,4,11 (FIG B)			1,2,3,11 (FIG A)			1,2,3,11 (FIG C)				

NOTES:

1. REFER TO APPLICABLE SYMBOL LIST.
2. DIMENSIONING AND TOLERANCING PER ANSI Y14.5-1973.
3. FIGURE A, PERIPHERAL TERMINAL CONFIGURATION, APPLICABLE.
4. FIGURE B, AXIAL TERMINAL CONFIGURATION, APPLICABLE.
5. FIGURE C, AXIAL TERMINAL CONFIGURATION, APPLICABLE.
6. MAXIMUM RADIUS OF .050 ON ALL BODY EDGES AND CORNERS.
7. POSITION OF LEAD TO BE MEASURED .185–.190 FROM BOTTOM OF DIMENSION D.
8. POSITION OF LEAD TO BE MEASURED .050–.055 BELOW SEATING PLANE.
9. LEAD DIMENSIONS UNCONTROLLED IN L_1 AND L_2.
10. TAB OUTLINE OPTIONAL WITHIN BOUNDARIES OF DIMENSIONS E AND R.
11. CONTROLLING DIMENSIONS: INCH.

15. OUTLINE DRAWINGS

Y220/TO220

NOTES:

1. Refer to applicable symbol list
2. Dimensioning and tolerancing per ansi Y14.5 - 1973
3. Figure "A" axial terminal configuration, applicable.
4. Figure "B" peripheral terminal configuration, applicable.
5. Alternate terminal configurations allowed within Ob and c.
6. Tab contour optional within H_1 and E.
7. Chamfer optional.
8. Position of terminal to be measured 1.27-1.40 below seating plane.
9. Position of terminal to be measured 6.35-6.48 from bottom of dimension D.
10. Controlling dimension: Inch.
11. Leads shall be in true position within .38 diameter, measured 5.21-6.48 from bottom of dimension D.
12. Figure "C" peripheral terminal configuration applicable.
13. Mold flash allowed within L_4.
14. Controlling Dimension: Millimeters.

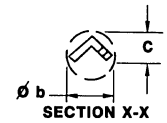

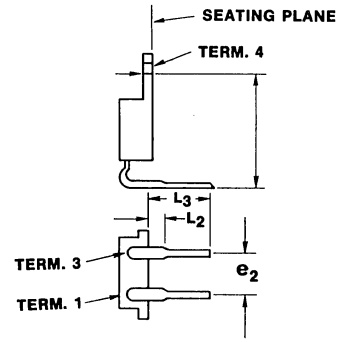

Fig. "A"
AXIAL (NOTE 3)

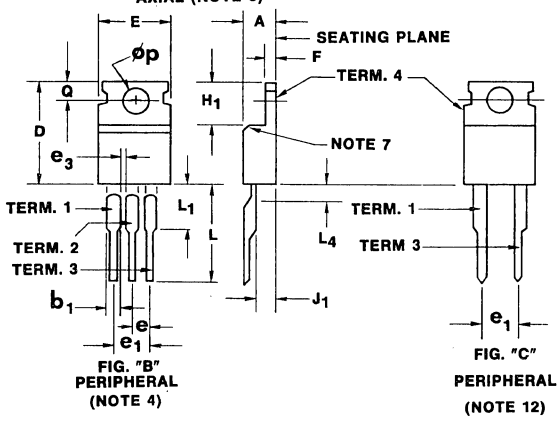

SYMBOL	VARIATIONS (All Dimensions Shown in Millimeters)								
	AA		NOTE	AB		NOTE	AC		NOTE
	MIN..	MAX.		MIN.	MAX.		MIN.	MAX.	
A	3.56	4.82		3.56	4.82		3.56	4.82	
b_1	1.15	1.77		1.15	1.77		.99	1.40	
øb	.51	1.14	5	.51	1.14	5	.51	1.14	5
c	.31	1.14	5	.31	1.14	5	.31	1.14	5
D	14.23	15.87		14.23	16.51		14.23	16.51	
E	9.66	10.66	6	9.66	10.66	6	9.66	10.66	6
e	–	–		2.29	2.79	9	–	–	
e_1	–	–		4.83	5.33	9	5.08	BSC	
e_2	4.83	5.33	8	–	–		–	–	
e_3	–	–		1.15	–	–		–	
F	.51	1.39		.51	1.39		.51	1.39	
H_1	5.85	6.85	6	5.85	6.85	6	5.85	6.85	6
J_1	2.04	2.92		2.04	2.92		2.04	2.92	
L	–	–		12.70	14.73		12.70	14.73	
L_1	–	–		–	6.35		4.60	6.35	
L_2	–	1.27		–	–		–	–	
L_3	8.64	10.71		–	–		–	–	
L_4	–	–		–	–	–		.51	
øP	3.531	3.733		3.54	4.08		3.531	3.733	
Q	2.54	3.04		2.54	3.42		2.54	3.04	
s	14.74	15.49		–	–		–	–	
NOTE	1, 3, 10			1, 4, 10			1, 11, 12, 14		

Y240/TO240

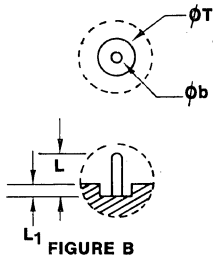

FIGURE B

NOTES:

1. Refer to applicable symbol list Jedec Publication No. 95
2. Dimensioning and tolerancing per ansi Y14.5, 1973
3. Terminals 4 & 5 are quick connect. They conform to Nema Standards Publication No. DC2 - 1976
4. Terminals 1, 2 & 3 are M5-8mm. Long screws ISO 10-32 UNF-2A 5-16" long optional
5. Contour of Terminals 1, 2 & 3 is optional
6. Dimension "A" does not include lugs or cable assemblies
7. Chamfer on mounting holes optional
8. Figure A applicable to variation AA
9. Figure B applicable to variation AB
10. Orientation of terminals 4 & 5 optional
11. Controlling dimension: Millimeter
12. Surface adjacent to terminals may have ribs or other contour

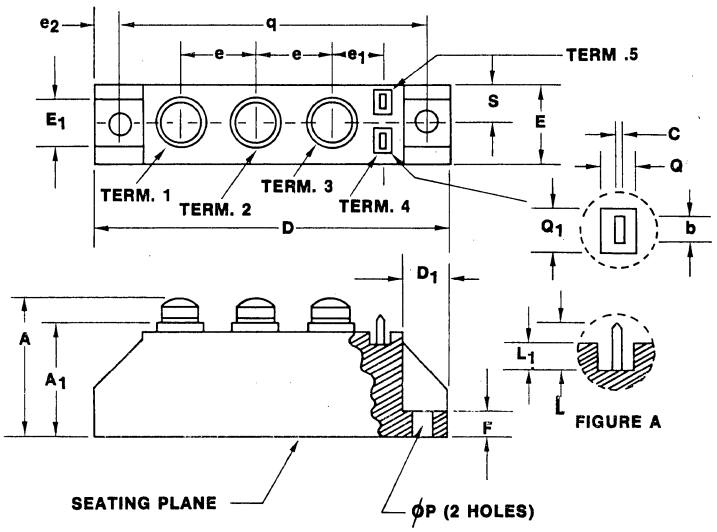

SYMBOL	VARIATIONS (All Dimensions Shown in Millimeters)					
	AA		NOTE	AB		NOTE
	MIN.	MAX.		MIN.	MAX.	
A	31.75	37.34	6	31.75	37.34	6
A_1	28.45	32.26	12	28.45	32.26	12
b	2.72	2.87	3,10	–	–	
c	.78	.84	3,10	–	–	
øb	–	–		1.20	1.60	
D	91.50	92.50		91.50	92.50	
D_1	11.30	13.00		10.92	13.00	
E	19.50	20.95		19.50	20.95	
E_1	11.30	13.00		11.18	13.00	
e	19.50	20.50	5	19.25	20.75	5
e_1	11.30	–		10.67	–	
e_2	5.77	6.25		5.70	6.22	
F	6.00	8.70		3.05	8.70	
L	7.00	8.00		5.00	6.85	
L_1	0.00	4.44		.90	1.15	
øP	5.80	6.40	7	5.80	6.40	7
q	79.75	80.30		79.75	80.30	
øT				4.27	4.87	
S	9.75	10.25		9.75	10.25	
Q	4.80	–		–	–	
Q_1	7.05	–		–	–	
NOTE	1, 2, 4, 6, 8, 10, 11			1, 2, 4, 6, 9, 11		

15. OUTLINE DRAWINGS

JEDEC GAUGE DESIGNATIONS

The Gauge Designations below are referenced in the JEDEC TO Outline Drawings

GS1

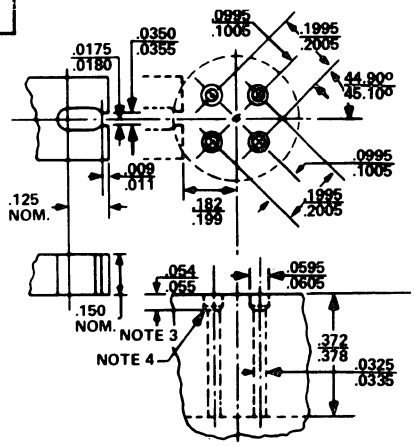

NOTES:

1. THE LOCATION OF THE TAB LOCATOR WITHIN THE LIMITS INDICATED WILL BE DETERMINED BY THE TAB AND FLANGE DIMENSIONS OF THE DEVICE BEING CHECKED.
2. THE FOLLOWING GAUGING PROCEDURE SHALL BE USED:

   THE DEVICE BEING MEASURED SHALL BE INSERTED UNTIL ITS SEATING PLANE IS .125" (3.18 MM) ± .010" (.254MM) FROM THE SEATING SURFACE OF THE GAUGE. A FORCE OF 8 ± .5 OZ. SHALL THEN BE APPLIED PARALLEL AND SYMMETRICAL TO THE DEVICE'S CYLINDRICAL AXIS. WHEN EXAMINED VISUALLY AFTER THE FORCE APPLICATION (THE FORCE NEED NOT BE REMOVED) THE SEATING PLANE OF THE DEVICE SHALL BE SEATED AGAINST THE GAUGE.

   THE USE OF A PIN STRAIGHTENER PRIOR TO INSERTION IN THE GAUGE IS PERMISSIBLE.
3. GAUGING PLANE.
4. DRILL ANGLE.

GS2

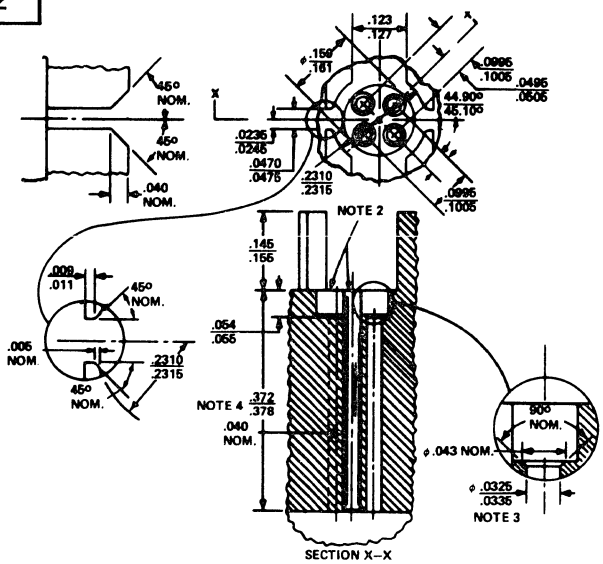

NOTE 1: THE FOLLOWING GAUGING PROCEDURE SHALL BE USED:

THE DEVICE BEING MEASURED SHALL BE INSERTED UNTIL ITS SEATING PLANE IS 0.125" ± .010" FROM THE SEATING SURFACE OF THE GAUGE. A FORCE OF 8 ± 0.5 OZ. SHALL THEN BE APPLIED PARALLEL AND SYMMETRICAL TO THE DEVICE'S CYLINDRICAL AXIS. WHEN EXAMINED VISUALLY AFTER THE FORCE APPLICATION (THE FORCE NEED NOT BE REMOVED) THE SEATING PLANE OF THE DEVICE SHALL BE SEATED AGAINST THE GAUGE.

THE USE OF A PIN STRAIGHTENER PRIOR TO INSERTION IN THE GAUGE IS PERMISSIBLE.

A SPACER MAY BE USED TO OBTAIN THE 0.125" DISTANCE FROM THE GAUGE SEAT PRIOR TO FORCE APPLICATION.

NOTE 2: THESE SURFACES TO BE PARALLEL AND IN SAME PLANE WITHIN ± .001".

NOTE 3: FOUR HOLES.

NOTE 4: PRESSED IN.

Z NOTES

(DRAWING REFERENCE INFORMATION)

DASH NO.

- – 3 Consult the manufacturer for the outline drawing.
- –10 These items are available either as pairs with outline drawings M182 and M206 or as quads with outline drawings M183 and M184.
- –16 Available in either TO5, TO18, F3a or F49.
- –21 1N82A and 1N82AG are electrically identical. The package configuration for 1N82A is A90, and for 1N82AG is DO7.
- –23 This item is shown without adapter at F56 and with adapter at S216.
- –27 Device same as S120. Type number suffix - N - indicates anode connected to stud. Suffix - P - indicates cathode connected to stud.
- –28 Device is same as S120a. Type number suffix - N - indicates anode connected to stud. Suffix - P - indicates cathode connected to stud.
- –29 Device is same as S128. Type number suffix - N - indicates anode connected to stud. Suffix - P - indicates cathode connected to stud.
- –42 Type number with suffix N28 applies to drawing F10x; type number with suffix N26 applies to F49b; type number with suffix N18 applies to M86b; type number with suffix N20 applies to F27f; type number with suffix N10 applies to F54; type number with suffix N25 applies to F58; type number with suffix N27 applies to S252; type number with suffix N16 applies to F10p
- –45 Device package available in either A97 or F56a.
- –46 Type number with –1 indicates 1 wire lead as in M281; type number with –2 indicates 2 wire lead as in M282.
- –48 Available in the following package styles: suffix A added to type number denotes S4g; suffix B added to type number denotes M380; suffix C added to type number denotes F58; suffix D added to type number denotes S107b; suffix E added to type number denotes F27f; suffix F added to type number denotes S107c; suffix G added to type number denotes F10v.
- –49 Types with suffix A apply to outline drawing A109a; types with suffix B apply to outline drawing A1a.
- –60 Available in either F27v or F10q.

D.A.T.A.BOOK® MANUFACTURERS' PROFILE

MANUFACTURERS' CODES & NAMES

D.A.T.A. MFRS.' CODE		MANUFACTURERS
AEGG		AEG-Telefunken-Anlagentechnik
AEIL		Marconi Electronic Devices, Ltd.
ALGG	*	Telefunken Electronic, Abt. Verkaufsforderung
ALP		Alpha Industries, Inc.
AMR		American Microsemiconductor
AMX		Amex Electronics, Inc.
APD	*	American Power Devices, Inc.
APX		Amperex Electronic Co.
ASGI		Ansaldo Electronica Industriale S.p.A.
ASI		Advanced Semiconductor, Inc.
BBCG		Brown, Boveri, & Cie Aktiengesellschaft, Div. Semi & Converters
BELI		Bharat Electronics, Ltd.
CDI	*	Compensated Devices, Inc.
CDIL		Continental Device India, Ltd.
CEI		Calvert Electronics International, Inc.
CEN	*	Central Semiconductor Corp.
CHE	★	Cherry Semiconductor Corp.
CODI	★	CODI Corp.
COO	★	Coors Components, Inc.
CRI	*	Crimson Semiconductor, Inc.
CSD		Conditioning Semiconductor Devices Corp.
DGE		Digitron Electronics Corp.
DII	*	Diodes, Inc.
DIO		Dionics, Inc.
DIT	*	Diode Transistor Co., Inc.
DIX	★	Diotec Electronics Corp.
DTL		E.G. Datel
EAS		Eastron Corp.
EDI		Electronics Devices, Inc.
EDL	*	Edal Industries, Inc.
ELT		Elite Semiconductor Products, Inc.
ESP		Espey Mfg. & Electronics Corp.
ETC		Electronic Transistor Corp.
ETPC		Murata-Erie North America, Inc.
FEC		Fuji Electric/Collmer Semiconductor
FERB		Ferranti Electronics, Ltd.
FGRS	*	Fagor Electrotecnica
FSC		Fairchild Camera & Instrument/ Discrete Division
GBL	★	GigaBit Logic, Inc.
GDC		General Diode Corp.
GESY	*	General Electric Co.
GHZ		Frequency Sources, Inc.
GIC		General Instrument Corp.
GPD		Germanium Power Devices Corp.
GSE	*	General Semiconductor Industries, Inc.
GTC		General Transistor Corp.
GTN		Gentron Corp.
HAS		Harris Semiconductor
HIEE		W & G Instruments, Ltd.
HITJ		Hitachi, Ltd., Semicon & IC Div.
HPA		Hewlett Packard, Microwave Semicon. Div.
HSE	*	Hybrid Semiconductor & Electronics, Inc.
HTN	*	Hi-Tron Semiconductors Corp.
IDC	*	International Diode Corp.
IDI		International Devices, Inc.
IMTM		Industria Mexicana Toshiba
INC		International Components Corp.
INL		Intersil, Inc.
INR		International Rectifier Corp.
INRI		International Rectifier Corp.
INRJ		International Rectifier Corp.
ITTG	*	ITT Semiconductors Intermetall
KSI	*	Knox Semiconductor, Inc.
LAM		Lambda Semiconductors
LTE		Lansdale Transistor & Electronics, Inc.
LUCB	*	Lucas Electrical Electronics & Systems
MAL		Mallory Distributor Products, Div. of Mallory Component Group
MATJ		Matsushita Electronics Corp., (Panasonic)
MCY		Mercury Electronic Co.
MDC		Microwave Diode Corp.
MEHK		Micro Electronics, Ltd.
MIC		M/A Com., Inc.
MICB		Microwave Associates, Ltd.
MISI		Mistral S.p.A.
MITJ		Mitsubishi Electric Corp.
MOTA		Motorola Semiconductor Prods.
MSC		Microsemi Corp.
MULB		Mullard Limited
NAT	★	National Electronics
NECE		NEC Electronics U.S.A., Electron Div.
NECJ		Nippon Electric Co.
NJRC		New Japan Radio Co., Ltd.
NJS		New Jersey Semiconductor
NSC		National Semiconductor Corp.
ORIJ		Origin Electric Co., Ltd.
PDE		PD&E, Inc.
PHIN	*	Philips Electronic Components & Materials Div.
PIHS		Piher Semiconductors
PII		Parametric Industries, Inc.
POS	*	Power Semiconductors, Inc.
PPC		PPC Products Corp.
PRX	★	Powerex, Inc.
PSLI		Punjab Semiconductor Devices, Ltd.
QTC		Quantrad Corporation
RECT		Rectron, Ltd.
RFE		RF Electronics Inc.
RHM		ROHM Corporation
RHMJ		ROHM Co., Ltd.
RTCF	*	RTC-Compelec
RTN		Raytheon Company
SAKJ		Sanken Electric Co., Ltd.
SAR		ST.-Semicon, Inc.
SCA		Semicoa
SCE	*	Semiconductor Components, Inc.
SCH		Schauer Manufacturing Corp.
SCN	*	Semicon Components, Inc.
SDI		SDI, Inc.
SEKG	*	Semikron Int'l, Inc.
SELI		Semiconductors, Ltd.
SEN		Sensitron Semiconductor, Div.
SES	*	Semitronics Corp.
SET	*	Semtech Corp.
SGSI		SGS-ATES Componenti Elet. SPA
SHEJ		Shindengen Elect. Mfg. Co., Ltd.
SIEG		Siemens Aktiengesellschaft
SISI	★	Secowest Italia S.p.A.
SIX		Siliconix, Inc.
SLCB		Semitron, Limited
SLD	*	Solid State Industries, Inc.
SOD		Solitron Devices, Inc.
SONY		Sony Corp.
SPE	*	Space Power Electronics, Inc.
SPR		Sprague Electric Co.
SSI	*	Solid State Devices, Inc.
SST		Solid State, Inc.
SSX	★	Sussex Semiconductor, Inc.
SSY	*	Solid State Systems
STI	*	Semiconductor Technology, Inc.
STR		Syntar Industries, Inc.
SWT		Swampscott Electronics Co., Inc.
TCE		Teccor Electronics, Inc.
TCY		Teledyne Crystalonics, Inc.
THEF		Thomson-CSF/EFCIS
TIC	*	TIC Semiconductors
TOSJ		Toshiba Corp.
TRI		Trio Laboratories, Inc.
TRWM		TRW Microwave
TRWO		TRW Optoelectronics Div.
TRWS		TRW RF Device Div.
TSAJ		Tokyo Sanyo Electric Co.
TSN		Transistor Specialtys, Inc.
UNI		Unitrode Corporation
UPI	*	UPI Semiconductor, Div.
USSR		V/O Electronorgtechnica
UTX	★	Unitex
VALG		VALVO GmbH, Dept.
VARO	*	Varo Semiconductor, Inc.
VEC		Victory Engineering Corp.
VMI		Voltage Multipliers, Inc.
WAB		Walbern Devices, Inc.
WESB	*	Westcode Semiconductors

★ New Manufacturer
* See Manufactuers' Sales Offices Section

ADVANCED SEMICONDUCTORS INC. – ASI
7525 Ethel Ave.
No. Hollywood, CA 91605
818/982-1202

Diode, Linear ICs, Microwave, Thyristor, Transistor

AEG-AKTIENGESELLSCHAFT – AEGG
Postfach 2160
D-4788 Warstein Belecke
Industriekomponten, West Germany
TELEX: 84833

Diode

DEVICE NUMBERING KEY

DISCRETE DEVICES

MATERIAL
- A – GERMANIUM (Materials with a band gap 0.6-1.0 eV)[1]
- B – SILICON (Materials with a band gap 1.0-1.3 eV)[1]
- C – GALLIUM-ARSENIDE (Materials with a band gap > 1.3 eV)[1]
- R – COMPOUND MATERIALS (For instance Cadmium-Sulphide)

FUNCTION
- A – DIODE: Detection, switching, mixer
- B – DIODE: Variable capacitance
- C – TRANSISTOR: Low power, audio frequency
- D – TRANSISTOR: Power, audio frequency
- E – DIODE: Tunnel
- F – TRANSISTOR: Low power, high frequency
- G – DIODE: Oscillator, Miscellaneous
- H – DIODE: Magnetic sensitive
- K – HALL EFFECT DEVICE: in an open magnetic circuit
- L – TRANSISTOR: Power, high frequency
- M – HALL EFFECT DEVICE: in a closed magnetic circuit
- N – PHOTO COUPLER
- P – DIODE: Radiation sensitive
- Q – DIODE: Radiation generating
- R – THYRISTOR: Low power
- S – TRANSISTOR: Low power, switching
- T – THYRISTOR: Power
- U – TRANSISTOR: Power, switching
- X – DIODE: Multiplier, e.g. varactor, step recovery
- Y – DIODE: Rectifying, booster
- Z – DIODE: Voltage reference or voltage regulator. Transient suppressor diode

SERIAL NUMBER
- Three figures, running from 100 to 999, for devices primarily intended for consumer equipment.
- One letter (Z, Y, X, etc.) and two figures running from 10 to 99, for devices primarily intended for professional equipment.

A version letter can be used to indicate a deviation of a single characteristic, either electrically or mechanically.
The letter never has a fixed meaning, the only exception being the letter R, indicating reversed voltage, i.e. collector to case.

[1]) The materials mentioned are examples.

EXAMPLE

B – MATERIAL
P – FUNCTION
W20 – SERIAL NUMBER

DEVICE NUMBERING KEY

POWER DIODES

PREFIX
- D – Diode

CURRENT
- Limiting average current in amperes

DESCRIPTION/POLARITY
- Fully diffused diode
  - N – Anode on case
  - NR – Cathode on case
- Fast diode
  - S – Anode on case
  - SR – Cathode on case
- Alloyed – diffused diode
  - / – Anode on case
  - R – Cathode on case

VOLTAGE
- Limiting repetitive peak reverse voltage in volts

MECHANICAL CONSTRUCTION
- A – Wire – wire
- B – Stud – cable
- C – Stud – solder pin
- E – Flat-base – cable
- H – Pressfit case – solder pin
- R – Insulated stud – solder pin
- T – Disc
- U –, V –, W – } Types with UNF – studs

EXAMPLE

D – PREFIX
1800 – VOLTAGE
N – DESCRIPTION/POLARITY
3200 – CURRENT
T – MECHANICAL CONSTRUCTION

AEG-AKTIENGESELLSCHAFT Cont'd

DEVICE NUMBERING KEY

LOW POWER RECTIFIER BRIDGES

PREFIX
B – Bridge circuit (B2)
VOLTAGE
Maximum supply voltage
CURRENT (On heatsink)
Maximum direct current in mA
CURRENT (Without heatsink)
Maximum direct current in mA

EXAMPLE

B 250 C 3700 / 2200 Si

- B – PREFIX
- 250 – VOLTAGE
- C – CAPACITIVE LOAD
- 3700 – CURRENT (On heatsink)
- 2200 – CURRENT (Without heatsink)
- Si – SILICON

DEVICE NUMBERING KEY

COMPACT RECTIFIER BRIDGE

PREFIX
B2 – Circuit B2
B6 – Circuit B6
SUPPLY VOLTAGE
Maximum supply voltage
DIRECT VOLTAGE
Maximum direct voltage
CURRENT
Maximum direct current in amperes

EXAMPLE

B2 380 340 30 Si

- B2 – PREFIX
- 380 – SUPPLY VOLTAGE
- 340 – DIRECT VOLTAGE
- 30 – CURRENT
- Si – SILICON

DEVICE NUMBERING KEY

UNCONTROLLED POWER MODULES

PREFIX
DD – With diodes
CURRENT
Limiting forward current in amperes
RANGE
N – Type range for line – commutated converters
S – Type range for forced commutated converters
VOLTAGE
Repetitive peak off-state voltage
SPECIAL DESIGN
A – Common anode
K – Common cathode

EXAMPLE

DD 151 N 1800 K - A

- DD – PREFIX
- 151 – VOLTAGE
- N – CURRENT
- 1800 – RANGE
- K – POWERBLOCK
- A – SPECIAL DESIGN

MANUFACTURER – D.A.T.A. CODE	MFR'S LOGO	D.A.T.A.BOOKS
ALPHA INDUSTRIES – ALP 20 Sylvan Road Woburn, MA 01801 617/935-5150		Application Notes, Diodes, Linear ICs, Microwave, Modules/Hybrids, Transistor
AMERICAN MICROSEMICONDUCTOR – AMR 133 Kings Rd. Madison, NJ 07940 201/377-9566		Digital ICs, Diode, Microwave, Thyristor, Transistor
AMEX ELECTRONICS, INC. – AMX 11555 Coley River Circle Fountain Valley, CA 92708 714/979-3931		Diode, Transistor
AMPEREX ELECTRONIC CORP. – APX Slatersville Div. Slatersville , RI 02876 401/762-3800	Amperex®	Audio/Video ICs, Diode, Linear ICs, Microwave, Modules/Hybrids, Optoelectronics, Thyristor, Transistor
ANSALDO S.p.A. – DIV ELECTRONICA – ASGI Via Nicola Lorenzi 8 Genoa, Italy I16152	ANSALDO	Diode, Thyristor
BHARAT ELECTRONICS LTD. – BELI Semiconductor Division Bangalore 560 0130 India Telex: 0845-244		Audio/Video ICs, Digital ICs, Diode, Linear ICs, Microwave, Transistor
BROWN, BOVERI & CIE AKTIENGESELLSCHAFT – BBCG P.O. Box 200 D-6840 Lampertheim/Hessen W. Germany TELEX: 0465727	BBC BROWN BOVERI	Diode, Thyristor
CALVERT ELECTRONICS INC. – CEI 3030 No. River Rd. River Grove, IL 60171 312/456-0600		Diode, Linear ICs, Microwave, Power Supplies, Thyristor, Transistor
CENTRAL SEMICONDUCTOR CORP. – CEN 145 Adams Ave. Hauppauge, NY 11788 516/435-1110	Central Semiconductor	Diode, Linear ICs, Microwave, Thyristor, Transistor
CHERRY SEMICONDUCTOR CORP. – CHE 2000 So. County Trail E. Greenwich, RI 02818-0031 401/885-3600	CHERRY	Audio/Visual ICs, Interface ICs, Linear ICs, Optoelectronics, Transistor, Application Notes, Diode
CODI CORP. – CODI 144 Market Street Kenilworth, NJ 07033 201/298-0400		Diode, Microwave, Optoelectronics

MANUFACTURER – D.A.T.A. CODE	MFR'S LOGO	D.A.T.A.BOOKS
COMPENSATED DEVICES, INC. – CDI 166 Tremont St. Melrose, MA 02176 617/665-1071		Diode
CONTINENTAL DEVICE INDIA LTD. – CDIL C-120, Naraina Industrial Area New Delhi, India 110028 Telex: 031-2770	CDIL Continental Device Ind	Diode, Linear ICs, Transistor
CONDITIONING SEMICONDUCTOR DEVICE CORP. – CSD 87-A Jacksonville Rd. Towaco, NJ 07082 201/335-6723	CS dc	Diode, Linear ICs, Transistor
COORS COMPONENTS, INC. – COO 800 Hoyt Street Broomfield, CO 80020 303/469-2161	Coors	Microprocessor ICs, Linear ICs, Interface ICs, Diode
CRIMSON SEMICONDUCTOR, INC. – CRI 460 W. 34th St. 12th Floor New York, NY 10001 212/947-8585		Diode, Linear ICs, Microwave, Thyristor, Transistor
DIGITRON ELECTRONICS CORP. – DGE 110 Hillside Ave. Springfield, NJ 07081 201/379-9016		Diode, Transistor, Thyristor
DIODE TRANSISTOR CO., INC. – DIT 40 Pier Lane West Fairfield, NJ 07006 201/686-0400	D.I.T.	Diode, Linear ICs, Microwave, Thyristor, Transistor
DIODES, INC. – DII 9957 Canoga Ave. Chatsworth, CA 91311 818/882-4920		Diodes
DIONICS INC. – DIO 65 Rushmore St. Westbury, NY 11590 516/997-7474		Diode, Interface ICs, Linear ICs, Transistor
DIOTEC ELECTRONICS CORP. – DIX 20309 Gramercy Pl. Unit D Torrance, CA 90501 213/215-3241	DIOTEC	Diode
EASTRON CORP. – EAS 15 Hale St. Haverhill, MA 01830 617/373-3824	Eastron	Application Notes, Diode, Microwave

MANUFACTURER – D.A.T.A. CODE	MFR'S LOGO	D.A.T.A.BOOKS
EDAL INDUSTRIES, INC. – EDL 4 Short Beach Rd. East Haven, CT 06512 203/467-2591	EDAL	Diode
ELECTRONIC DEVICES, INC. – EDI 21 Gray Oaks Ave. Yonkers, NY 10710 914/965-4400	edi	Diode
ELECTRONIC TRANSISTORS CORP. – ETC 112-15 Northern Blvd. Flushing, NY 11368 212/651-7200	ETC	Diode, Linear ICs, Microwave, Thyristor, Transistor
ELITE SEMICONDUCTOR PRODUCTS, INC. – ELT 430 W. Merrick Rd. Valley Stream, NY 11580 516/825-1010	ELITE	Diode, Thyristor
EPSEY MFG. & ELECTRONICS CORP. – ESP Congress & Ballstone Aves. Saratoga Springs, NY 12866 518/584-4100		Diode
ERIE TECH PRODUCTS OF CANADA LTD. – ETPC 5 Fraser Ave. Trenton, Ontario Canada K8V 5S1	ERIE	Diode
FAGOR ELECTROTECNICA S. COOP. – FGRS Mondragon P.O. Box 33 Guipuzcoa, Spain 43/711011 TELEX: 36669	fagor	Diode
FAIRCHILD LINEAR DIV. – FSC 450 National Ave. Mountain View, CA 94042 415/962-3874	FAIRCHILD A Schlumberger Company	Application Notes, Audio/Video ICs, Digital ICs, Diode, Interface ICs, Linear ICs, Memory ICs, Microcomputer Systems, Microprocessor ICs, Microwave, Modules/Hybrids, Optoelectronics, Transistor
FERRANTI ELECTRONICS LTD. – FERB Fields New Road Chadderton Oldham OL9 8NP England Telex: 668038	FERRANTI semiconductors®	Application Notes, Audio/Video ICs, Digital ICs, Diode, Interface ICs, Linear ICs, Memory ICs, Microwave, Modules/Hybrids, Optoelectronics, Transistor
FREQUENCY SOURCES, INC. – GHZ Semicon. Div. 16 Maple Rd. S. Chelmsford, MA 01824 617/256-8101	LORAL	Application Notes, Diode, Microwave

MANUFACTURER – D.A.T.A. CODE	MFR'S LOGO	D.A.T.A.BOOKS
FUJI ELECTRIC CO. – FEC 14368 Proton Rd. Dallas, TX 75244 214/233-1589	FUJI ELECTRIC	Diode
G.E. DATEL – DTL 11 Cabot Blvd. Mansfield Industrial Park Mansfield, MA 02048 617/339-9341		Digital ICs, Diode, Interface ICs, Linear ICs, Microcomputer Systems, Modules/Hybrids, Optoelectronics, Power Supplies
GENERAL DIODE CORP. – GDC 90 Eames St. Framingham, MA 01701 617/897-0880		Diode, Linear ICs, Transistor
GENERAL ELECTRIC SEMICONDUCTOR – GESY Electronics Park Bldg. 7 Syracuse, NY 13221 315/456-3606	SEMICONDUCTOR	Application Notes, Diode, Microwave, Optoelectronics, Power Supplies, Thyristor, Transistor
GENERAL INSTRUMENT CORP. – GIC 600 West John St. Hicksville, NY 11802 516/733-3123	GENERAL INSTRUMENT	Application Notes, Audio/Video ICs, Diode, Interface ICs, Linear ICs, Memory ICs, Microcomputer Systems, Microprocessor ICs, Modules/Hybrids, Optoelectronics
GENERAL SEMICONDUCTOR, INC. – GSE 2001 W. 10th Pl. Tempe, AZ 85281 602/968-3101		Diode, Transistor, Application Notes
GENERAL TRANSISTOR CORP. – GTC 216 West Florence Inglewood, CA 90301 213/673-8422	GTE	Diode, Linear ICs, Microwave, Thyristor, Transistor
GENTRON CORP. – GTN 6667 No. Sidney Pl. Milwaukee, WI 53209 414/351-1660	GTN	Diode, Modules/Hybrids, Thyristor
GERMANIUM POWER DEVICES CORP. – GPD P.O. Box 3065, Shawsheen Village Stn. Andover, MA 01810 617/475-5982		Diode, Linear ICs, Transistor
GIGABIT LOGIC, INC. – GBL 1908 Oak Terrace Lane Newbury Park, CA 91320 805/499-0610	GBL GigaBit Logic	Digital ICs, Interface ICs, Application Notes, Linear ICs, Memory ICs, Diode

MANUFACTURER – D.A.T.A. CODE	MFR'S LOGO	D.A.T.A.BOOKS
HARRIS SEMICONDUCTOR – HAS P.O. Box 883 Melbourne, FL 32901 305/724-7000		Application Notes, Digital ICs, Diode, Interface ICs, Linear ICs, Memory ICs, Microprocessor ICs, Modules/Hybrids
HEWLETT PACKARD – HPA 3000 Hanover St. Palo Alto, CA 94304 415/857-1501	HEWLETT PACKARD	Application Notes, Diode, Microwave, Optoelectronics Linear ICs, Interface ICs
HITACHI LTD., SEMICON & IC DIV. – HITJ 2210 O'Toole Ave. San Jose, CA 95131 800/421-1040 408/942-1500	HITACHI	Audio/Video ICs, Digital ICs, Diode, Interface ICs, Linear ICs, Memory ICs, Microprocessor ICs, Microwave, Optoelectronics, Transistor, Thyristor
HI-TRON SEMICONDUCTOR CORP. – HTN 85 Engineers Rd. Hauppauge, NY 11787 516/231-1500		Diode, Linear ICs, Microwave, Thyristor, Transistor
HYBRID SEMICONDUCTORS & ELECT., INC. – HSE 50-14 39th St. Long Island, City, NY 11104 212/392-0277	HSE	Diode, Linear ICs, Microwave, Thyristor, Transistor
INDUSTRIA MEXICANA TOSHIBA S.A. – IMTM Calzada de Guadalupe 303 Cuautitlan Edo de Mexico, Mexico	Toshiba	Digital ICs, Diodes, Transistors, Linear ICs Optoelectronics, Interface ICs, Thyristor
INTERNATIONAL COMPONENTS CORP. – INC 105 Maxess Rd. Melville, NY 11747 516/293-1500	International ©	Diode
INTERNATIONAL DEVICES INC. – IDI 5417 E. LaPalma Ave. Anaheim, CA 92807 714/779-5855	ID	Diode, Linear ICs, Microwave, Transistor
INTERNATIONAL DIODE CORP. – IDC 229 Cleveland Ave. Harrison, NJ 07029 201/482-5292	International Diode Corporation	Diode, Microwave
INTERNATIONAL RECTIFIER – INR 233 Kansas Street El Segundo, CA 90245 213/772-2000	IOR	Application Notes, Diode, Linear ICs, Optoelectronics, Thyristor, Transistor

INTERNATIONAL RECTIFIER CORP. ITALIANA – INRI
Via Privata Liguria 49
10070 Borgaro
Torinese, Italy
TELEX: 21257

Diode, Optoelectronics

INTERNATIONAL RECTIFIER CORP. – INRJ
Daiei Bldg. No. 23-7
Shinjuku 3-chome, Shinjuku-ku
Tokyo, Japan 160

Diode, Thyristor

INTERSIL, INC. – INL
10600 Ridgeview Court
Cupertino, CA 95014
408/996-5000

Application Notes, Audio/Video ICs, Digital ICs, Diode, Interface ICs, Linear ICs, Memory ICs, Microcomputer Systems, Microprocessor ICs, Modules/Hybrids, Power Supplies, Transistor

---

ITT SEMICONDUCTORS INTER-METALL – ITTG
P.O. Box 840 D-7800 Freiburg 1 Br.
West Germany
Telex: 0772716

Audio/Video ICs, Diode, Interface ICs, Linear ICs, Memory ICs, Microprocessor ICs, Microwave, Transistor

---

KNOX SEMICONDUCTOR, INC. – KSI
314 Main Street
Suite 208
Wilmington, MA 01887
617/658-0060

Diode, Microwave

LAMBDA SEMICONDUCTOR – LAM
121 International Drive
Corpus Christi, TX 78410
512/289-0403
800/255-9606

Diode, Linear ICs, Modules/Hybrids, Power Supplies, Transistor, Interface ICs, Application Notes

---

LUCAS ELECTRICAL LTD. – LUCB
Mere Green Rd.
Sutton Coldfield
West Midlands B75 5BN
England
Telex: 338461

Application Notes, Diode, Transistor

MALLORY DISTRIBUTOR PROD. CO. – MAL
P.O. Box 1284
Indianapolis, IN 46206
317/636-5353

Diode, Thyristor, Transistor

MARCONI ELECTRONIC DEVICES, LTD. – AEIL
160 Smith Street
Farmingdale, NY 11735
516/293-8686

Diode, Microwave, Thyristor, Microprocessor ICs, Transistor, Application Notes, Digital ICs, Linear ICs, Interface ICs

---

MANUFACTURER – D.A.T.A. CODE	MFR'S LOGO	D.A.T.A.BOOKS
MATSUSHITA ELECTRONICS CORP. – MATJ 1 Kotari-Yakemachi Nagaokakyo Kyoto 617, Japan Telex: J63461		Audio/Video ICs, Digital ICs, Diode, Interface ICs, Linear ICs, Memory ICs, Microprocessor ICs, Microwave, Modules/Hybrids, Optoelectronics, Power Supplies, Thyristor, Transistor
MERCURY ELECTRONIC CO. – MCY P.O. Box 335 Atlantic Highlands, NJ 07716 201/291-1600		Diode
MICRO ELECTRONICS LTD. – MEHK 38 Hung To Road Kwun Tong, Hong Kong Telex: 43510		Application Notes, Audio/Video ICs, Diode, Linear ICs, Optoelectronics, Thyristor, Transistor
MICRO POWER SYSTEMS – MPS 3100 Alfred Street Santa Clara, CA 95054 408/727-5350	MICRO POWER SYSTEMS	Interface ICs, Linear ICs, Memory ICs, Transistor, Digital ICs
MICROSEMI CORP. – MSC P.O. Box 26890 Santa Ana, CA 92799-6890 714/979-8220	MICRO	Diode, Microwave
M/A COM., INC. – MIC 43 South Ave. Bldg. 1 Burlington, MA 01803 617/272-3000		Diode, Microwave, Transistor
MICROWAVE ASSOCIATES, LTD. – MICB Dunstable, LU54SC Bedfordshire, England TELEX: 82295		Diode, Microwave
MICROWAVE DIODE CORP. – MDC Washington St., US Route 3 W. Stewartstown, NH 03597 603/246-3362	MDC	Diode, Microwave, Thyristor
MISTRAL SPA – MISI Via Dell Irto 32 Latina Scalo 04013 Italy		Diode, Linear ICs, Microwave, Transistor
MITSUBISHI ELECTRIC CORP. – MITJ Kita-Itami Works 4-1 Mizuhara Itami City Hyogo, Japan 664 TWX: 072-782-5131		Application Notes, Audio/Video ICs, Digital ICs, Diode, Interface ICs, Linear ICs, Memory ICs, Microcomputer Systems, Microprocessor ICs, Microwave, Optoelectronics, Thyristor, Transistor

MOTOROLA SEMICONDUCTOR PRODUCTS, INC. – MOTA

3501 Ed Bluestein Blvd.
Austin, TX 78721
512/928-7675

Application Notes, Audio/Video ICs, Digital ICs, Diode, Interface ICs, Linear ICs, Memory ICs, Microcomputer Systems, Microprocessor ICs, Microwave, Modules/Hybrids, Optoelectronics, Thyristor, Transistor

NON-STANDARD ZENER DIODES

NOMINAL ZENER VOLTAGE (VOLTS)
4 Characters Maximum
Excluding Decimal

TOLERANCE
(±%) (omit for ±20% units)

EXAMPLE

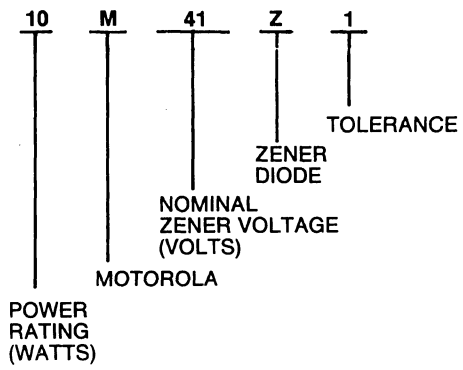

MATCHED SETS OF ZENER DIODES

NOMINAL VOLTAGE
Each device
4 Characters Maximun
Excluding Decimal

TOLERANCE
Per device (±%)
(omit for ±20% units)

CODE:
A – Not used
B – Two devices in series
C – Three devices in series
D – Four devices in series
E – Five devices in series
F – Six devices in series
G – Seven devices in series
H – Eight devices in series
X – Two devices; one standard polarity, the other reverse polarity (10 and 50 watts only)

EXAMPLE

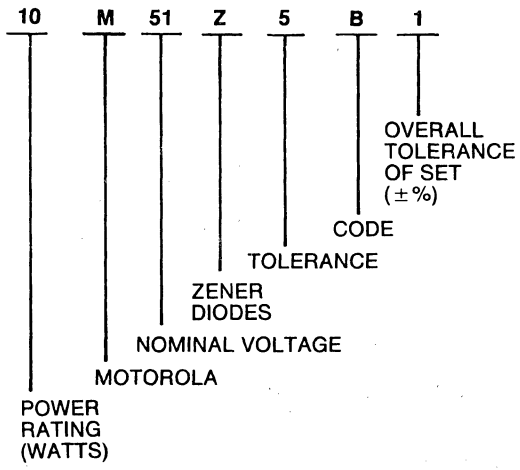

MULLARD LTD. – MULB

New Road
Mitcham, Surrey
England CR4 4XY
Telex: 264341

Application Notes, Audio/Video ICs, Digital ICs, Diode, Interface ICs, Linear ICs, Memory ICs, Microcomputer Systems, Microwave, Modules/Hybrids, Optoelectronics, Thyristor, Transistor, Power Supplies

MULLARD LTD. Cont'd

DEVICE NUMBERING KEY

DISCRETE DEVICES

MATERIAL USED

The first letter indicates the semiconductor material used:
- A - germanium
- B - silicon
- C - compound materials such as gallium arsenide
- R - compound materials such as cadmium sulphide

FUNCTION

The second letter indicates the general function of the device:
- A - detection diode, high speed diode, mixer diode
- B - variable capacitance diode
- C - transistor for a.f. applications (not power types)
- D - power transistor for a.f. applications
- E - tunnel diode
- F - transistor for r.f. applications (not power types)
- G - multiple of dissimilar devices; miscellaneous devices
- L - power transistor for r.f. applications
- N - photo-coupler
- P - radiation sensitive device such as photodiode, phototransistor, photoconductive cell, or radiation detector diode
- Q - radiation generating device such as light-emitting diode
- R - controlling and switching device (e.g. thyristor) having a specified breakdown characteristic (not power types)
- S - transistor for switching applications (not power types)
- T - controlling and switching power device (e.g. thyristor) having a specified breakdown characteristic
- U - power transistor for switching applications
- X - multiplier diode such as varactor or step recovery diode
- Y - rectifier diode, booster diode, efficiency diode
- Z - voltage reference or voltage regulator diode, transient suppressor diode

SERIAL NUMBER

The remainder of the type number is a serial number indicating a particular design or development and is in one of the following two groups:

(a) Devices intended primarily for use in consumer applications (radio and television receivers, audio amplifiers, tape recorders, domestic appliances, etc.) The serial number consists of three figures.

(b) Devices intended mainly for applications other than (a), e.g. industrial, professional and transmitting equipments. The serial number consists of one letter (Z, Y, X, W, etc.) followed by two figures.

RANGE NUMBERS

Where there is a range of variants of a basic type of rectifier diode, thyristor or voltage regulator diode the type number as defined above is often used to identify the range; further letters and figures are added after a hyphen to identify associated types within the range. These additions are as follows:

Rectifier Diodes and Thyristors

The group of figures indicates the rated repetitive peak reverse voltage, V_{RRM}, or the rated repetitive peak off-state voltage, V_{DRM}, whichever value is lower, in volts for each type.

The final letter R is used to denote a reverse polarity version (stud-anode) where applicable. The normal polarity version (stud cathode) has no special final letter.

Voltage Regulator Diodes, Transient Suppression Diodes

The first letter indicates the nominal percentage tolerance in the operating voltage Vz.

A - ±1%	D - ±10%
B - ±2%	E - ±20%
C - ±5%	

EXAMPLE

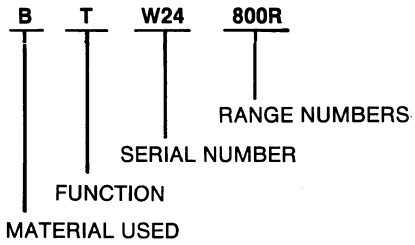

The letter is omitted on transient suppressor diodes.

The group of figures indicates the typical operating voltage Vz for each type at the nominal operating current Iz rating of the range. For transient suppressor diodes the figure indicates the maximum recommended standoff voltage V_R.

The letter V is used to denote a decimal sign.

The final letter R is used to denote a reverse polarity version (stud anode) where applicable. The normal polarity version (stud cathode) has no special final letter.

NATIONAL ELECTRONICS, INC. – NAT
P.O. Box 424
Franklin Park, IL 60131
312/456-0600

Application Notes, Diode, Optoelectronics, Thyristor

NATIONAL SEMICONDUCTOR CORP. – NSC
P.O. Box 58090
Santa Clara, CA 95052
408/721-5000

Application Notes, Audio/Video ICs, Digital ICs, Diode, Interface ICs, Linear ICs, Memory ICs, Microwave, Modules/Hybrids, Microcomputer Systems, Microprocessor ICs, Optoelectronics, Transistor

---

NEC ELECTRONIC U.S.A., INC. – NECE
401 Ellis Street
P.O. Box 7241
Mountain View, CA 94039
415/960-6000

Application Notes, Audio/Video ICs, Diode, Interface ICs, Linear ICs, Memory ICs, Microprocessor ICs, Microwave, Modules/Hybrids, Thyristor, Transistor, Optoelectronics

NEC ELECTRONICS U.S.A., INC. Cont'd

DISCRETE DEVICES

1st term	2nd term	3rd term	4th term	5th term
numeral	character	character	numeral	character
Number of Electrode Elements	Semiconductor Designator		Registration Number	Improvements

EXAMPLE

2 S C 138 A

- 2 – NUMBER OF ELECTRODES
- S – SEMICONDUCTOR DESIGNATOR
- C – FUNCTION
- 138 – NUMBER DETERMINED BY ORDER OF REGISTRATION (THE 138th ELEMENT REGISTERED)
- A – IMPROVEMENTS

NUMBER OF ELECTRODES

1st TERM

0 is used for the numeral of the 1st term, for phototransistors, photodiodes and composite elements including such diodes and transistors. In other elements, when the number of effective electrodes is n, the number n-1 is used for the numeral of the 1st term. That is to say, for a 2 electrode elements such as a diode 1, for a 3 electrode transistor 2, and for a 4 electrode transistor 3 is used. In the case of composite elements, the element with the most numerous electrodes is taken and, similarly to the above, when the number of electrodes of this element is n the numeral of the 1st term shall be n-1.

In the above case, since shield lead wires and 2 or more lead wires coming from the same electrode are not counted as effective electrodes, the number of effective electrodes and the number of lead wires may not necessarily be the same.

SEMICONDUCTOR DESIGNATOR

2nd TERM

S is employed, in order to indicate that the product is a semiconductor.

FUNCTION

3rd TERM

This character is deleted, when the 1st term numeral is 0 or 1.

When the numeral of the 1st term is one or more, in order to make the polarity and outline characteristics of the element known, one of the following characters is used for the 3rd term.

- A – High frequency PNP transistors.
- B – Low frequency PNP transistors.
- C – High frequency NPN transistors.
- D – Low frequency NPN transistors.
- E – Esaki diodes.
- F – Thyristors.
- G – Gunn diodes.
- H – Single junction transistors.
- J – P channel field effect transistors.
- K – N channel field effect transistors.
- M – Bidirectional thyristors.
- Q – Light emitting diodes.
- R – Rectifying diodes.
- S – Small signal diodes.
- T – Avalanche conduction diodes.
- V – Variable capacity diodes, PIN diodes, Snap-off diodes.
- Z – Zener diodes.

However, in the case of diodes some products still remain that have been registered under the old system, in which the 3rd term character is deleted and the type name is in the form of 1SOO.

REGISTRATION NUMBER

4th TERM

A number which is attached in accordance with the order of registration, that starts at 11.

IMPROVEMENT

5th TERM

This character indicates improvements from the original form. This character is not attached to the original form, but is attached to improved models employing the capital letters, A, B, C, D, E, F, G, H, J, K of the alphabet in the order of the improvements. In the case improvements are made, the improved model shall be compatible with the preceding model, though compatibility in the opposite direction is not necessarily required.

In the case of diodes, when the letter M is used for the 5th term it indicates that the element is a matching couple, and when R is used that the polarity is reversed while the exterior and electrical characteristics are the same.

In addition to the above, with no bearing on the JIS nomenclature, a character or number in ( ) is sometimes used as a 6th term to indicate that the specification is that of a specific customer.

- N – NHK standard type (example: 2SC594 N)
- M – Defense Agency Maritime General Staff approved (example: 2SC68-M)
- S – One of the several S series types established for industrial measurement (example 2SD188 S)
- (numerals)...Established for specific customers or applications. Attached sequentially from (1) in order of establishment. (example: 2SC653(1), 1S306(3))

DISCRETE DEVICES

NEC'S ORIGINAL NOMENCLATURE.

Some diodes and optical semiconductor elements employ a nomenclature original to NEC. This nomenclature consists of a prefix of 2 or 3 alphabet characters followed by a numeral and character. As shown in the table, the prefix indicates the use and structure of the element.

NEC Nomenclature

Prefix	Use & Structure	Product example
AD	Impatt diode	AD611
GD	Gunn diode	GD408A
GH	Germanium mixer diode	GH1D
PH	Phototransistor	PH201A
PS	Photocoupler, photointerrupter	PS2001
RD	Zener diode	RD2.OE
SD	Small signal diode	SD13
SE	Infrared light emitting diode	SE301A
SG	Green light emitting diode	SG203D
SH	Point contact type silicon diode	SH5A
SM	Schotty barrier type GaAs mixer diode	SM153
SR	Red light emitting diode	SR103D
SY	Amber color light emitting diode	SY403D
SV	Silicon varactor diode	SV87D

EXAMPLE

AD 611

- AD – PREFIX
- 611 – DEVICE NUMBER

MANUFACTURER – D.A.T.A. CODE	MFR'S LOGO	D.A.T.A.BOOKS
NEW JAPAN RADIO CO., LTD. – NJRC 1-22-14 Toranomon Minato-ku Tokyo, 105 Japan	JRC	Diode, Microwave, Audio/Video ICs, Linear ICs, Digital ICs
NEW JERSEY SEMICONDUCTOR PROD., INC. – NJS 20 Stern Ave. Springfield, NJ 07083 201/376-2922	NJS SEMICONDUCTORS	Diode, Linear ICs, Microwave, Thyristor, Transistor
NIPPON ELECTRIC CO., LTD. – NECJ 484 Tsukagoshi, 3-Chome Saiwai-Ku, Kawasaki City Managawa, 210 Japan Refer to NEC for ordering information	NEC	Audio/Video ICs, Digital ICs, Diode, Interface ICs, Linear ICs, Memory ICs, Microprocessor ICs, Microwave, Modules/Hybrids, Optoelectronics, Thyristor, Transistor
ORIGIN ELECTRIC CO. LTD. – ORIJ 1-18-1 Takada Toshimaku Tokyo, Japan Telex: 272-2068	Origin	Diode, Linear ICs, Thyristor, Transistor
PARAMETRIC INDUSTRIES, INC. – PII 43 South Avenue Bldg. 1 Burlington, MA 01803 617/272-3000	PI	Diode, Microwave
PD & E, INC. – PDE Newington Industrial Park Newington, NH 03801 603/436-8121	PD&E	Diode
PHILIPS ELECTRONICS – PHIN Components & Materials Division Elcoma Comm. Dept. Eindhoven, Netherlands Telex: 0772716	PHILIPS	Application Notes, Audio/Video ICs, Digital ICs, Diode, Interface ICs, Linear ICs, Memory ICs, Microprocessor ICs, Microwave, Modules/Hybrids, Optoelectronics, Power Supplies, Thyristor,Transistor
PIHER SEMICONDUCTORS – PIHS Avda San Julian S/N Apart. 177 Granollers, Barcelona, Spain TELEX: 59522		Diode, Transistor, Thyristor
POWEREX, INC. – PRX Hillis Street Youngwood, PA 15697 412/925-7272	POWEREX Joint Venture Corporation of Westinghouse, General Electric and Mitsubishi	Diode, Transistor, Thyristor, Application Notes, Linear ICs
POWER SEMICONDUCTORS, INC. – POS 6352 Corte Del Abeto Carlsbad, CA 92008 619/438-7873	POWER Semi conductors INC.	Diode, Thyristor

PPC PRODUCTS CORP. – PPC
7516 Central Industrial Dr.
Riviera Beach, FL 33404
305/858-9606

Diode, Transistor

PUNJAB WIRELESS SYSTEMS LTD. – PSLI
B-76 Industrial Area, Phase VII
S.A.S. Nagar 160 051
Mohali, India

Diode, Linear ICs, Transistor

QUANTRAD CORP. – QTC
19900 So. Normandie Ave.
Torrance, CA 90502
213/538-9800

Diode, Optoelectronics

RAYTHEON COMPANY – RTN
350 Ellis Street
Mountain View, CA 94043
415/968-9211

Application Notes, Digital ICs, Diode, Interface ICs, Linear ICs, Memory ICs, Microwave, Optoelectronics, Transistor

DEVICE NUMBERING KEY

BEAM LEAD CHIPS

PREFIX		
BD		Diode; 2 anode beams, 2 cathode beams
B2D	–	Diode; 1 anode beam, 1 cathode beam, 2 beams mechanical support only
BZ	–	Zener diode
BT	–	Transistor

SUFFIX		
No Designator	–	B-level (military) visual
C	–	C-level (commercial) visual
T	–	B-level visual chip in TO-18 can TO-18 can

EXAMPLE

BD 458A C

SUFFIX

DEVICE NUMBER

PREFIX

RECTIFIER COMPONENTS – RCC
1484 Ridgway Street
Union, NJ 07083
201/687-5410

Diode

RECTRON, LTD. – RECT
71 Chung Sun Rd.
Tu-Chen Ind. Dist.
Taipei Hsian, Taiwan
Republic of China

Diode

RF ELECTRONICS INC. – RFE
3303 Harbor Blvd.
Ste. J-1
Costa Mesa, CA 92626

Diode

ROHM CO., LTD. – RHMJ
P.O. Box 103
Central Kyoto, Japan
Telex: 5422545

Diode, Interface ICs, Linear ICs, Transistor, Audio/Video ICs

ROHM CORP. – RHM
P.O. Box 19515
Irvine, CA 92713
714/855-2131

Diode, Microwave, Transistor

RTC COMPELEC – RTCF
130 Ave. Ledru-Rollin
75540 Paris Cedex 11
France
43 38 800
Telex: 680495

Audio/Video ICs, Digital ICs, Diode, Interface ICs, Linear ICs, Memory ICs, Microprocessor ICs, Application Notes, Modules/Hybrids, Microwave, Optoelectronics, Thyristor, Transistor Microcomputer Systems, Power Supplies

---

SANKEN ELECTRIC CO., LTD. – SAKJ
1-22-8 Nishi Ikebukuro
Toshima-Ku
Tokyo, Japan
Telex: 2722323

Audio/Video ICs, Diode, Linear ICs, Modules/Hybrids, Optoelectronics, Thyristor, Transistor

---

SCHAUER MANUFACTURING CORP. – SCH
4500 Alpine Dr.
Cincinnati, OH 45242
513/791-3030

Diode

SDI, INC. – SDI
11 Executive Park Dr.
North Billerica, MA 01862
617/667-7700

Diode, Microwave

SECOWEST ITALIA S.P.A. – SISI
Corso Novara 17
10078 Venaria, Italy

Thyristor, Diode

SEMICOA – SCA
333 McCormick Avenue
Costa Mesa, CA 92626
714/979-1900

Diode, Linear ICs, Microwave, Thyristor, Transistor, Optoelectronics

---

SEMICON COMPONENTS, INC. – SCN
10 North Ave.
Northwest Industrial Park
Burlington, MA 01803
617/272-9015

Diode

SEMICONDUCTOR COMPONENTS, INC. – SCE
1353 E. Edinger Ave.
Santa Ana, CA 92705
714/547-6059

Diode, Microwave

SEMICONDUCTORS, LTD. – SELI
Sub. M/S Advani Oerlikon Ltd.
Ahmednager Rd.
Mile 4/5 Poona-411 014 India
TELEX: 145362SCL

Diode, Transistor, Thyristor

SEMICONDUCTOR TECHNOLOGY, INC. – STI
3131 Southeast Jay St.
Stuart, FL 33494
305/283-4500

Application Notes, Diode, Linear ICs, Microwave, Transistor, Thyristor

---

SEMIKRON INT'L DR. – SEKG
11 Executive Dr.
P.O. Box 66
Hudson, NH 030501
603/883-8102

Diode, Thyristor

SEMITRON, LTD. – SLCB
Cricklade
Wiltshire, England SN6 6HQ
TELEX: 44848

Diode

SEMITRONICS CORP. – SES
64 Commercial St.
Freeport, NY 11520
516/623-9400

Diode, Microwave

SEMTECH CORP. – SET
652 Mitchell Rd.
Newbury Park, CA 91320
213/628-5392

Diode

SENSITRON SEMICONDUCTOR – SEN
221 W. Industry Ct.
Deer Park, NY 11729
516/586-7600

Diode

SGS-ATES COMPONENTI ELET. S.P.A. – SGSI
Via C. Olivetti, 2-20041
Agrate Brianza, Milan
Italy
Telex: 330131

Application Notes, Audio/Video ICs, Diode, Digital ICs, Interface ICs, Linear ICs, Memory ICs, Microcomputer Systems, Microwave, Microprocessor ICs, Modules/Hybrids, Transistor

---

SHINDENGEN ELECTRIC MFG. CO. LTD. – SHEJ
New Ohtemachi Bldg. 2-1
2-chome Ohtemachi, Chiyoda-ku
Tokyo, 100 Japan

Diode, Power Supplies, Thyristor, Transistor

SIEMENS AKTIENGESELLSCHAFT – SIEG
Frankfurter Ring 152
D-8000 Munchen 46, West Germany
Telex: 5288332

Application Notes, Digital ICs, Diode, Interface ICs, Linear ICs, Memory ICs, Microcomputer Systems, Audio/Video ICs, Microprocessor ICs, Microwave, Optoelectronics, Thyristor, Transistor

---

SILICONIX, INC. – SIX
2201 Laurelwood Road
Santa Clara, CA 95054
408/988-8000

Application Notes, Diode, Interface ICs, Linear ICs, Microwave, Transistor, Optoelectronics

---

MANUFACTURER – D.A.T.A. CODE	MFR'S LOGO	D.A.T.A.BOOKS
SOLID STATE DEVICES, INC. – SSI 14830 Valley View Avenue La Mirada, CA 90638 213/921-9660		Diode, Linear ICs, Thyristor, Transistor
SOLID STATE ELECTRONICS CO. PVT. LTD. – SSEI Plot 9.123 M.C.I.E. Sir M.V. Rd. PO7432 J.B. Nagar Post., Bombay, India		Transistor, Diode
SOLID STATE, INC. – SST 46 Farrand Street Bloomfield, NJ 07003 201/429-8700		Diode, Linear ICs, Microwave, Thyristor, Transistor
SOLID STATE INDUSTRIES, INC. – SLD 1060 Thomas Jefferson St. N.W. Washington, DC 20007 202/338-3150		Diodes, Linear ICs, Thyristor, Transistor
SOLID STATE SYSTEMS – SSY 960 Koehl Avenue Union, NJ 07083 201/688-0222		Diode, Linear ICs, Transistor
SOLITRON DEVICES, INC. – SOD 1177 Blue Heron Blvd. Riviera Beach, FL 33404 800/327-8462		Application Notes, Digital ICs, Diode, Interface ICs, Linear ICs, Modules/Hybrids, Transistor, Memory ICs
SONY CORPORATION – SONY Semiconductor Business Div., 10-18 Takanawa 4 Chome, Minato-ku Comp. Mktg. Tokyo, 108 Japan Telex: 4425111	SONY	Diode, Linear ICs, Microwave, Optoelectronics, Transistor, Interface ICs, Audio/Video ICs
SPACE POWER ELECTRONICS, INC. – SPE Jeffrey Lane R.D. 1 Glen Gardner, NJ 08826 201/537-2184		Diode, Linear ICs, Microwave, Thyristor, Transistor
SPRAGUE ELECTRIC COMPANY – SPR 115 Northeast Cutoff Worcester, MA 01606 617/385-5000	SPRAGUE THE MARK OF RELIABILITY	Application Notes, Audio/Video ICs, Digital ICs, Diode, Interface ICs, Linear ICs, Optoelectronics, Power Supplies, Thyristor, Transistor
ST. SEMICON, INC. – SAR 415 No. College Ave. P.O. Box 609 Bloomington, IN 47402 812/332-1435		Diode, Thyristor

MANUFACTURER – D.A.T.A. CODE	MFR'S LOGO	D.A.T.A.BOOKS
SUSSEX SEMICONDUCTOR, INC. – SSX P.O. Box 69 Augusta, GA 07822 201/948-3633		Diode
SWAMPSCOTT ELECTRONICS CO., INC. – SWT 41 Spinale Road Swampscott, MA 01907 617/598-4116		Diode, Linear ICs, Microwave, Thyristor, Transistor
SYNTAR INDUSTRIES INC. – STR 3400 Brush Hollow Road Westbury, NY 11590 516/333-2012		Diode, Linear ICs, Microwave, Thyristor, Transistor
TECCOR ELECTRONICS, INC. – TCE P.O. Box 61447 Dallas, TX 75261 214/252-7651	TECCOR TECCOR ELECTRONICS, INC	Application Notes, Diode, Thyristor, Transistor
TELEDYNE CRYSTALONICS, INC. – TCY 147 Sherman Street Cambridge, MA 02140 617/491-1670		Diode, Interface ICs, Linear ICs, Microwave, Modules/Hybrids, Optoelectronics, Transistor
TELEFUNKEN ELECTRONIC – ALGG Semiconductor Theresienstrasse 2 Heilbronn D-7100 West Germany	TELEFUNKEN electronic Creative Technologies	Application Notes, Audio/Video ICs, Diode, Interface ICs, Linear ICs, Optoelectronics, Digital ICs, Microwave, Transistor, Microprocessor ICs
THOMSON CSF/EFCIS – THEF 45 Avenue de L'Europe Velizy Villacoublay France	THOMSON-CSF	Application Notes, Audio Video ICs, Digital ICs, Diode, Interface ICs, Linear ICs, Memory ICs, Optoelectronics, Microcomputer Systems, Microprocessor ICs, Microwave, Modules/Hybrids, Thyristor, Transistor
TIC SEMICONDUCTOR – TIC 18 W. 21st Street New York, NY 10010 212/675-6722		Diode, Linear ICs, Microwave, Thyristor, Transistor
TOSHIBA CORPORATION – TOSJ c/o Microelectronics Center 1 Komukai, Toshiba s/o Sai Kawasaki 210, Japan Telex: J22587	Toshiba	Application Notes, Audio/Video ICs, Digital ICs, Diode, Interface ICs, Linear ICs, Memory ICs, Microcomputer Systems, Microprocessor ICs, Microwave, Modules/Hybrids, Optoelectronics, Thyristor, Transistor
TOKYO SANYO ELECTRIC CO., LTD. – TSAJ Oizumimachi Oragun Gumma, Japan	SANYO	Audio/Video ICs, Digital ICs, Diode, Interface ICs, Linear ICs, Memory ICs, Microprocessor ICs, Modules/Hybrids, Microwave, Power Supplies, Thyristor, Transistor

MANUFACTURER – D.A.T.A. CODE	MFR'S LOGO	D.A.T.A.BOOKS
TRANSISTOR SPECIALTYS, INC. –TSN 3 Electronics Avenue Danvers, MA 01923 617/774-8722	tsi	Diode, Linear ICs, Transistor
TRIO LABORATORIES, INC. – TRI 80 Dupont St. Plainview, Long Island NY 11803 516/349-0400	TRIO LABS	Application Notes, Diode
TRW MICROWAVE – TRWM 825 Stewart Dr. Sunnyvale, CA 94086 408/732-0880	TRW TRW Microwave	Diode, Modules/Hybrids, Microwave
TRW OPTRON – TRWO 1416 Upfield Dr. Carrollton, TX 75006 214/323-2200	TRW	Application Notes, Diode, Linear ICs, Optoelectronics, Transistor
TRW RF DEVICE DIVISION – TRWS 14520 Aviation Blvd. Lawndale, CA 90260 213/536-0888	TRW	Application Notes, Diode, Modules/Hybrids, Microwave, Transistor
UNITEX – UTX 2852 Walnut Ave. Suite F Tustin, CA 92680 714/838-0838		Diode
UNITRODE CORPORATION – UNI 5 Forbes Road Lexington, MA 02173 617/861-6540		Application Notes, Diode, Linear ICs, Microwave, Modules/Hybrids, Thyristor, Transistor, Interface ICs
U P I SEMICONDUCTOR – UPI 401 Getty Ave. Paterson, NJ 07503 201/279-7500	UPI	Diode, Linear ICs, Microwave, Thyristor, Transistor
VARO SEMICONDUCTOR, INC. – VARO 1000 N. Shiloh Rd. Garland, TX 75041 214/840-5257	VARO INC	Application Notes, Diode
V/O ELECTRONZAGRANPOSTAVKA – USSR 24/2 Ulitsa Usievicha Moscow 125315 U.S.S.R.		Digital ICs, Diode, Interface ICs, Linear ICs, Memory ICs, Microwave, Optoelectronics, Transistor

VALVO GMBH – VALG
P.O. Box 106323
D-2000 Hamburg 1
West Germany
Telex: 2161891

Application Notes, Audio/Video ICs, Digital ICs, Diode, Microcomputer Systems, Interface ICs, Linear ICs, Memory ICs, Microprocessor ICs, Microwave, Modules/Hybrids, Optoelectronics, Thyristor, Transistor, Power Supplies

---

VICTORY ENGINEERING CORP. – VEC
Victory Rd. P.O. Box 559
Springfield, NJ 07081
201/379-5900

Application Notes, Diode

VOLTAGE MULTIPLIERS, INC. – VMI
8711 W. Roosevelt Ave.
Visalia, CA 93291
209/651-1402

Diode

WALBERN DEVICES/SEMICONDUCTORS, INC. – WAB
1818 E. Elizabeth Ave.
Linden, NJ 07036
201/486-2226

Diode, Linear ICs, Microwave, Thyristor, Transistor

WESTCODE SEMICONDUCTOR, LTD. – WESB
P.O. Box 57 Chippenham
Wiltshire SN15 1JD England

Diode, Thyristor, Transistor

DEVICE NUMBERING KEY

RECTIFIER DIODES

TYPE
(1 Letter)
H – High temperature
M – Fast recovery
W – Standard
All types are diffused

VOLTAGE
(2 Digits)
Rating ÷ 100

PACKAGE
(1 Letter)
C – Capsule (PUCK)
K – Flat base (□)
H – Flat base (Hex)
P – Stud base

TOP TERMINAL
(1 Letter)
X – Capsule (PUCK)
B – Rigid bus
H – Flexible
C – Flag

POLARITY
(1 Letter)
C – Capsule (PUCK)
R – Reverse
N – Normal

CURRENT
(3 Digits)
Current rating on 100°C sink

EXAMPLE

S M 20 C X C 924 P

- P – PARALLEL OPERATION
- 924 – CURRENT
- C – POLARITY
- X – TOP TERMINAL
- C – PACKAGE
- 20 – VOLTAGE
- M – TYPE
- S – PREFIX

W & G INSTRUMENTS – HIEE
Burrington Way
Plymouth Devon
England PL5 2LZ
TELEX: 45592

Diode

DIODE — INTERPRETER
SYMBOLS & CODES EXPLAINED

★ SYMBOLS & CODES COMMON TO MORE THAN ONE SECTION

ALL VALUES ARE TYPICAL AND @ 25°C UNLESS OTHERWISE INDICATED BY COLUMN HEADINGS OR SYMBOLS.

TYPE NUMBER

△ % # ☑ Used when more than one manufacturer assigns the same type number to different devices, or when two or more like devices are listed with different test parameters.

– RT.....Indicates replacement type; consult manufacturer.

#1, #2,...Used when there is more than one electrical function or package for the same type number.

REVERSE POLARITY TYPES

Note: Availability of reverse polarity types is indicated by a ☑ symbol in the Dwg. No. column.

FOLLOWING LINE NO.

▼ – New Type
♦ – Revised Specifications
– Non-JEDEC type manufactured outside U.S.A.

UNDER DESCRIPTION

UNDER MATERIAL (and Process)
GA – Gallium Arsenide
Ge – Germanium
GP – Gallium Phosphide
GS – Gallium Antimonide
Se – Selenium
SG – Germanium Silicon
Si – Silicon
* – Alloyed

△ – Diffused
Ø – Gold Bonded
† – Indium Bonded
☑ – Point Contact
– Planar
§ – Mesa
$ – Epitaxial
♦ – Schottky Barrier
▼ – Ion Implanted

ENGLISH-RUSSIAN ALPHABET TRANSLITERATION FOR USSR TYPES

ENGLISH	RUSSIAN	ENGLISH	RUSSIAN
A	А	L	Л
B	Б	M	М
V	В	N	Н
G	Г	O	О
D	Д	P	П
E	Е	R	Р
SZ	Ж	S	С
I	И	T	Т
K	К	U	Y

SECTION 2 — VOLTAGE REFERENCE DIODES — SECTION 2

INCLUDES: Single- & Double-Anode Types $P_D < 5$ W

TYPE NO The manufacturer designated type number for the device.

TOLERANCE The total permissible variation of a quantity from a designated value. The allowable variation from the specified reference voltage.

NOM REF. VOLT The value of DC voltage across the device when it is biased to operate in its breakdown region at the given test current.

MAX DISS The maximum allowable device power dissipation resulting from current flow when the unit is biased in its breakdown region at 25°C ambient temperature.

TEST CUR The current at which the nominal reference voltage is specified.

DYN IMP The small signal impedance of the device when it is biased to operate in its breakdown region at the given test current.

TEMP COEFF The ratio of the change in the respective reference voltage usually expressed as a percentage of reference voltage, to the change in temperature. This ratio is the average value for the total temperature change.

MAX TEMP The maximum allowable ambient operating temperature.

DWG NO. The location of the device drawing.

2. SILICON REFERENCE DIODES

LINE No.	4 TYPE No.	3 TOL ± (%)	1 NOM. REF. VOLT. (V)	2 MAX. DISS. @ 25°C (W)	TEST CUR. Izt (A)	MAX. DYN. IMP. (Ω)	TEMP. COEFF Tc MAX	MAX. TEMP (°C)	DWG. NO.
✪	✪ ②	③		⑤		⑦	⑧	⑨	⑩

✪ SYMBOLS AND CODES AT TOP OF FIRST INTERPRETER PAGE, DI-1.

Continued Next Page

SECTION 2 — VOLTAGE REFERENCE DIODES (CONT'D) — SECTION 2

(2)
§ - Available to MIL Spec.
∅ - Double anode
† - Reference amplifier
* - Forward voltage reference diode
$ - Germanium

(3)
† - Available in selected voltages and/or tolerances; consult manufacturers listed.

(5)
§ - Above 25°C
† - Typical

(7)
† - Typical dyn. imp.

(8) $T_C = \frac{\Delta V / \Delta T}{V}$

Note: T_C is expressed in units of (10^{-4}/°C)

Eg: Column entry is 5.0, therefore $T_C = 5.0\ (10^{-4}/°C) = .05\%/°C$

T - Voltage-time stability per 1000 hrs. in ppm
p - ppm/°C
V - Temp. Co. in V/°C(max)

(9)
A - Ambient
B - Base or stud
C - Case
J - Junction
L - Lead
R - Max. reference temp. for specified temp. coeff.
S - Storage

(10)
⊠ - Available with reverse polarity; consult manufacturer
△ - Mounted in an oven
⊘ - Available in matched pairs; consult manufacturer
$ - Two matched units in separate cases

SECTION 3 — GENERAL-PURPOSE DIODES — SECTION 3

INCLUDES: Devices under 1 A

TYPE NO. The manufacturers designated type number for the device.

PIV Peak inverse voltage (also peak reverse voltage and working peak reverse voltage, V_{RWM}). The maximum instantaneous value of the reverse voltage, excluding all transient voltages, which occurs across a semiconductor rectifier diode.

FORWARD CURRENT I_F The respective value of current that flows through a semiconductor diode or rectifier diode in the forward direction.

@V_F The forward voltage drop across the diode at which the forward current I_F is specified.

Io RATED MAX The absolute maximum allowable value of the forward current averaged over a full cycle (180° conduction angle, 60 Hz).

MAX TEMP The maximum allowable ambient operating temperature of the device.

MAT The material used in manufacturing the device.

DWG NO. The location of the device drawing.

3. GENERAL-PURPOSE DIODES

LINE No.	5 TYPE NO.	1 PIV (V)	MINIMUM FORWARD CURRENT 3 IF (A)	4 @VF (V)	2 IO RATED MAX (W)	MAX. TEMP. (°C)	DESCRIPTION MAT.	DRAWING NO.
✪	✪	(3)	(4)	(5)	(6)	(7)	✪	(9)

(3)
$ - Max. cont. working voltage (PIV not specified)
△ - WV 90-99% of given PIV
* - WV 89% or less of given PIV

(4)
† - Typical
# - Maximum

(5)
- Max. forward voltage at I_f

(6)
§ - Above 25°C
# - MAX

(7)
C - Case
J - Junction
L - Lead
S - Storage

(9)
$ - Two matched units in separate cases
§ - Four matched units in separate cases
⊘ - Multi-junction device in two-terminal case
* - Two or more units in a single case (see Outline Drawing for terminal arrangement)
⊠ - Available with reverse polarity; consult manufacturer

✪ SYMBOLS AND CODES AT TOP OF FIRST INTERPRETER PAGE, DI-1.

Continued Next Page

DIODE — INTERPRETER
SYMBOLS & CODES EXPLAINED

SECTION 4 **HIGH-SPEED DIODES** **SECTION 4**

INCLUDES: Switching & Fast-Recovery Diodes

TYPE NO. The manufacturer designated type number for the device.

PIV Peak inverse voltage (also peak reverse voltage and working peak reverse voltage, V_{RWM}). The maximum instantaneous value of the reverse voltage, excluding all transient voltages, which occurs across a semiconductor rectifier diode.

RECOVERY TIME t_{rr} Reverse recovery time, the time interval between the instant when the current passes through zero, when changing from the forward direction, and the instant when the reverse current is reduced from its peak value $I_{RM(REC)}$ to 1) its first interception with the zero current axis or, to 2) a specified low value $i_{R(REC)}$ or, to 3) when the extrapolated reverse current reaches zero.

TEST CONDITION I_F The value of forward current at which the recovery time t_{rr} is specified.

TEST CONDITION V_r The value of reverse voltage at which the recovery time t_{rr} is specified.

TEST CONDITION Z_r The value of reverse impedance at which the recovery time t_{rr} is specified.

ABSOLUTE MAX TEMP The maximum allowable ambient operating temperature of the device.

MAT The material used in manufacturing the device.

DWG NO. The location of the device drawing.

4. HIGH SPEED DIODES

LINE No.	5 TYPE NO.	2 PIV (V)	RECOVERY TIME 3 trr (s)	TEST CONDITIONS 1 IF (A)	4 VR (V)	IR (A)	MAX. TEMP (°C)	DESCRIPTION MAT.	DRAWING NO.
✪	✪	3	4			7	8	✪	10

(3)

- WV 90-99% of given PIV
- WV 89% or less of given PIV

(4) ∅ - Storage time
C - Stored charge (coulombs)

(7) (Symbol indicates data in this column are either I_R or I_{RR}, as qualified)
† - t_{rr} measured when rectifier recovers to 10% of IRM. (Applies for soft recovery)
△ - I_{RR} when $I_R = -I_F$
∅ - I_{RR} when I_R not given (Note: I_{RR} is the reverse recovery current to which t_{RR} is measured)
⊘ - t_{rr} measured when rectifier recovers to 50% of IRM. (Applies for soft recover)
§ - t_{rr} measured when rectifier recovers to 25% of IRM. (Applies for soft recovery)
# - IRM (REC)

(8) C - Case
H - Heat Sink
J - Junction
L - Lead
S - Storage

(10) $ - Two matched units in separate cases
§ - Four matched units in separate cases
Parrallel Operation
∅ - Multi-junction device in two-terminal case
* - Two or more units in a single case (see Outline Drawing for terminal arrangement)
⊘ - Available with reverse polarity; consult manufacturer
△ - Step Recovery Diode
† - Single phase bridge Bridge Ckt.
• - Single Operation

✪ SYMBOLS AND CODES AT TOP OF FIRST INTERPRETER PAGE, DI-1.

Continued Next Page

SECTION 5 GENERAL-PURPOSE RECTIFIERS SECTION 5

INCLUDES: Devices from 1 mA to 7 kA

TYPE NO. The manufacturer designated type number for the device.

PIV Peak inverse voltage (also peak reverse voltage and working peak reverse voltage, V_{RWM}). The maximum instantaneous value of the reverse voltage, excluding all transient voltages, which occurs across a semiconductor rectifier diode.

MAX AVG FWD DC CURRENT I_0 The absolute maximum allowable value of the forward current averaged over a full cycle (180° conduction angle, 60 Hz).

@ TEMP The temperature at which the maximum average forward current is specified.

MAX SURGE CUR PEAK 1 Cy The absolute maximum allowable peak forward surge current at 60 Hz (sine wave) non-repetitive for 180° conduction angle.

MAX SURGE CUR PEAK PULSE WIDTH The specified pulse width for the surge current other than 180° conduction angle at 60 Hz sine wave.

MAX TEMP The maximum allowable operating temperature.

MAT The material used in manufacturing the device.

DWG NO. The location of the device drawing.

5. GENERAL-PURPOSE RECTIFIERS

LINE No.	4 TYPE NO.	2 PIV (V)	MAX AVG FWD DC CURRENT 1 Io (A)	3 @ TEMP (°C)	MAX RATING SURGE CURR PEAK 1 Cy (A)	PULSE WIDTH (s)	MAX. TEMP (°C)	DESCRIPTION MAT	DRAWING No.
✪	✪	2	3	4	5	6	8	✪	10

(2) – Also listed in Section 6 under Radiation Resistant Device

(3) $ – Max. cont. working voltage (PIV not specified)
% – Max. nonrepetitive peak transient reverse voltage

Following symbols indicate a max. cont. working voltage rating lower than the PIV value given in the column.
△ – WV 90-99% of given PIV
* – WV 89% or less of given PIV

(4) (Rating for resistive load unless otherwise indicated)
Ø - Capacitance load

(5) (Value given indicates temp. at which derating starts, unless otherwise indicated)
$ – Temperature at which derating starts is not specified.
A – Ambient
B – Base or stud
C – Case
H – Heat Sink
J – Junction
L – Lead
S – Storage

(6) Surge current value is given for one cycle of 60 (or 50 for most non-U.S. types) sine wave, unless a pulse value in Pulse Width column is also given.
§ – Above 25°C

(8) A – Ambient
B – Base or stud
C – Case
J – Junction
L – Lead
S – Storage

(10) * – Two or more units in a single case (see Outline Drawing for terminal arrangement)
\# – Forced air cooled
△ – Convection cooled
□ – Available with reverse polarity; consult manufacturer
% – Available with Heat Sink
§ – Parallel Operation
† – Bridge Ckt.

✪ SYMBOLS AND CODES AT TOP OF FIRST INTERPRETER PAGE, DI-1.

Continued Next Page

SECTION 6 — DIODE ARRAYS AND MATRIXES — SECTION 6

INCLUDES: Diode Array
Diode Matrix

TYPE NO.	The manufacturer designated type number for the device.
DATA SHEET	References page number of manufacturers supplied data sheet.
TYPE CODE	A 3 character code identifying the devices main function. (See code listing)
MAX FORWARD CURR	Maximum allowable dc current in the forward direction.
@ TEMP	The temperature at which the max forward current rating is specified.
VRRM	The maximum instantaneous value of the reverse voltage, including all repetitive transient voltages but excluding all non-repetitive transient voltges, that occurs across a semiconductor rectifier diode.
DIODE/CKT AND NO. OF CKTS	The total number of diodes in one main independent circuit of the device, and the number of circuits in the device.
BASIC DIODE CONNECT	2 or 3 character code showing the interconnect configuration. (See code listing)
MAX FORWARD VOLTAGE	The maximum forward voltage drop at a specified current.
@ IF	The value of forward current at which the max forward voltage is specified.
MAX REVERSE RECOVERY TIME	The time interval between the instant when the current passes through zero, when changing from the forward direction to the reverse direction, and the instant when the reverse current is reduced from its peak value ($I_{RM\ (REC)}$) to its first interception with the zero axis or its return to a specified low value ($I_{R\ (REC)}$) when the extrapolated reverse current reaches zero.
@ IF	The value of forward current (IF) at which the max reverse recovery time is specified.
@ IR	The value of reverse current (IR) at which the reverse recovery time (previous item) is specified.
MAX STATIC REVERSE CURR	The respective value of current that flows through a semiconductor diode or rectifier diode in the reverse direction for a given applied reverse voltage.
@ VR	The applied reverse voltage at which the max static reverse current is specified.
TOTAL PKG DISS	The maximum allowable power dissipation of the entire device.
TEMP LOW	Minimum allowable ambient operating temperature.
TEMP HI	Maximum allowable ambient operating temperature.
LOGIC DWG NO.	Indicates where schematic or logic diagram may be found.
OUTLINE DWG NO.	Indicates where device packaging information may be found.

6. DIODE ARRAYS & MATRICES

IN ORDER OF:(1)TYPE CODE(2)MAX.FWD.CURR. (3)Vrrm(4)TYPE NO.

LINE No.	4 TYPE NO.	DATA SHT.	1 TYPE CODE	2 MAX. FORWARD CURRENT (A)	@ °C	3 Vrrm (V)	DIODE/ CKT. NO. OF CKTS.	CONN	MAX.FORWARD VOLTAGE VF (V)	@ IF (A)	MAXIMUM REVERSE RECOVERY TIME trr (S)	IF (A)	Ir (A)	MAX.STATIC REVERSE CURRENT (A)	@ Vr (V)	MAX. OPER. POWER DISS. (W)	OPER. TEMP. RANGE CODE - +	DRAWINGS LOGIC OR BLOCK	OUTLINE
✪	✪		④		⑥			⑨					⑬				⑱	⑲	

✪ SYMBOLS AND CODES AT TOP OF FIRST INTERPRETER PAGE, DI-1.

Continued Next Page

SECTION 6 — DIODE ARRAYS AND MATRIXES (CONT'D) — SECTION 6

(4)
ARR - Array
MAT - Matrix

(6)
A - Ambient
B - Base or stud
C - Case
J - Junction
L - Lead
S - Storage

(9)
For all configurations (except matrix):
B - Bridge
A - Common anode
K - Common Cathode
D - Common Cathode & Anode
I - Independent Diodes
N - Network (circuit For Metrix configuration:
Following represents Row x Column connection shown in preceding field:
G - Cathode - Anode or
H - Anode - Cathode

(13)
$ - Recovery Test to 10% I_R

(18)(19)

0 - 0 up to 9°	A - 100 up to 109°
1 - 10 up to 19°	B - 110 up to 119°
2 - 20 up to 29°	C - 120 up to 129°
3 - 30 up to 39°	D - 130 up to 139°
4 - 40 up to 49°	E - 140 up to 149°
5 - 50 up to 59°	F - 150 up to 159°
6 - 60 up to 69°	G - 160 up to 169°
7 - 70 up to 79°	H - 170 up to 179°
8 - 80 up to 89°	J - 180 up to 189°
9 - 90 up to 99°	K - 190 up to 199°
	M - 200°C and above

5 C

$ Both values of temp. are pos. Max. value only is indicated

Examples Of Operating Temp Range Code

Min. value lies between -50°C and -59°C	Max. value lies between + 80° and +90°C

OR

S 8

Both values of temp. are pos. Max. value only as indicated	Max value lies between + 120°C and +129°C

SECTION 7 — TRANSIENT SUPPRESSOR DIODES — SECTION 7

INCLUDES: Unipolar and Bipolar Types

TYPE NO. The manufacturer designated type number for the device.
USE A numeric code representing the basic device function or use.
MAT The material used in manufacturing the device.
DWG NO. The location of the device drawing.
TECHNICAL DATA A brief description of the device and/or its electrical parameters.

7. MISCELLANEOUS DIODES

IN ORDER OF (1) USE (2) MAT AND (3) TYPE NO.

LINE No.	3 TYPE No.	1 USE	DESCRIPTION 2 MAT.	DWG. No.	TECHNICAL DATA
✪	✪	(3)	(4)	(5)	(6)

✪ SYMBOLS AND CODES AT TOP OF FIRST INTERPRETER PAGE, DI-1.

Continued Next Page

SECTION 7 TRANSIENT SUPPRESSOR DIODES (CONT'D) SECTION 7

7. TRANSIENT SUPPRESSOR DIODES

IN ORDER OF (1) USE (2) MAT AND (3) TYPE NO.

LINE No.	3 TYPE No.	1 USE	DESCRIPTION 2 MAT.	DWG. No.	TECHNICAL DATA
✪	✪	3	4	5	6

3 6. - Transient Suppressor Diode

4
ZnS - Zinc Sulfide
ZnO - Zinc Oxide
CS - Cadmium Sulfide
SnO - Tin Oxide

5
⊘ - Available with reverse polarity; consult manufacturer
△ - Available in matched pairs; consult manufacturer
$ - Two matched units in separate cases
† - Available in different package configuration; consult manufacturer
▼ - Available with reverse and/or double anode polarity
* - Multiple Devices In One Package
§ - Available W/Non Polarized; Consult Mfr.

6 △ - Optional characteristic, varies within limited tolerance; consult mfr.

SECTION 8 STANDARD RECOVERY BRIDGE RECTIFIERS SECTION 8

INCLUDES: Devices to 800 A

TYPE NO. The manufacturer designated type number for the device.

PIV Peak inverse voltage (also peak reverse voltage and working peak reverse voltage, V_{RWM}). The maximum instantaneous value of the reverse voltage, excluding all transient voltages, which occurs across a semiconductor rectifier diode.

MAX AVG FWD DC CURRENT I_0 The absolute maximum allowable value of the forward current averaged over a full cycle (180° conduction angle, 60 Hz).

MAX AVG FWD DC CURRENT AT TEMP The temperature at which the maximum average forward current is specified.

MAX SURGE CUR PEAK 1 Cy The absolute maximum allowable peak forward surge current at 60 Hz (sine wave) non repetitive for 180° conduction angle.

MAX SURGE CUR PEAK PULSE WIDTH The specified pulse width for the surge current other than 180° conduction angle at 60 Hz sine wave.

MAX TEMP The maximum allowable operating temperature.

MAT The material used in manufacturing the device.

DWG NO. The location of the device drawing.

LINE No.	4 TYPE NO.	2 PIV (V)	MAX AVG FWD DC CURRENT 1 Io (A)	3 @ TEMP (°C)	MAX RATING SURGE CURR PEAK 1 Cy (A)	PULSE WIDTH (s)	MAX. TEMP (°C)	DESCRIPTION MAT	DRAWING No.
✪	✪	2	3	4	5	6	8	✪	10

✪ SYMBOLS AND CODES AT TOP OF FIRST INTERPRETER PAGE, DI-1.

SECTION 8 STANDARD RECOVERY BRIDGE RECTIFIERS (CONT'D) SECTION 8

(2) – Also listed in Section 6 under Radiation Resistant Device (Use 9) (also see above)
* – Three-Phase Bridge

(3) $ – Max. cont. working voltage (PIV not specified)
% – Max. non-repetitive peak transient reverse voltage

Following symbols indicate a max. cont. working voltage rating lower than the PIV value given in the column.
△ – WV 90-99% of given PIV
* – WV 89% or less of given PIV

(4) (Rating for resistive load unless otherwise indicated)
ϕ – Capacitance load

(5) (Value given indicates temp. at which derating starts, unless otherwise indicated)
$ – Temperature at which derating starts is not specified.
A – Ambient
B – Base or stud
C – Case
H – Heat Sink
J – Junction
L – Lead
S – Storage

(6) Surge current value is given for one cycle of 60 (or 50 for most non-U.S. types) sine wave, unless a pulse value in Pulse Width column is also given.
§ – Above 25°C

(8) A – Ambient
B – Base or stud
C – Case
J – Junction
L – Lead
S – Storage

(10) ⊘ – Available with reverse polarity; consult manufacturer
♦ – Single Operation

SECTION 9 SCHOTTKY RECTIFIERS SECTION 9

INCLUDES: Devices to 300 A

TYPE NO. The manufacturer designated type number for the device.

PIV Peak inverse voltage (also peak reverse voltage and working peak reverse voltage, V_{RWM}). The maximum instantaneous value of the reverse voltage, excluding all transient voltages, which occurs across a semiconductor rectifier diode.

MAX AVG FWD DC CURRENT I_0 The absolute maximum allowable value of the forward current averaged over a full cycle (180° conduction angle, 60 Hz).

MAX AVG FWD DC CURRENT AT TEMP The temperature at which the maximum average forward current is specified.

MAX AVG FWD DC CURRENT AT TEMP The absolute maximum allowable peak forward surge current at 60 Hz (sine wave) non-repetitive for 180° conduction angle.

MAX SURGE CUR PEAK PULSE WIDTH The specified pulse width for the surge current other than 180° conduction angle at 60 Hz sine wave.

MAX TEMP The maximum allowable operating temperature.

MAT The material used in manufacturing the device.

DWG NO. The location of the device drawing.

9. SCHOTTKY RECTIFIERS

LINE No.	4 TYPE NO.	2 PIV (V)	MAX AVG FWD DC CURRENT 1 Io (A)	3 @ TEMP (°C)	MAX RATING SURGE CURR PEAK 1 Cy (A)	PULSE WIDTH (s)	MAX. TEMP (°C)	DESCRIPTION MAT	DRAWING No.
✪	✪	(2)	(3)	(4)	(5)	(6)	(8)	✪	(10)

✪ SYMBOLS AND CODES AT TOP OF FIRST INTERPRETER PAGE, DI-1.

Continued Next Page

SECTION 9 — SCHOTTKY RECTIFIERS (CONT'D) — SECTION 9

(2) – Also listed in Section 6 under Radiation Resistant Device (Use 9) (also see above)

(3) $ – Max. cont. working voltage (PIV not specified)
% – Max. non-repetitive peak transient reverse voltage

Following symbols indicate a max. cont. working voltage rating lower than the PIV value given in the column.
△ – WV 90-99% of given PIV
* – WV 89% or less of given PIV

(4) (Rating for resistive load unless otherwise indicated)
ϕ – Capacitance load

(5) (Value given indicates temp. at which derating starts, unless otherwise indicated)
$ – Temperature at which derating starts is not specified.
A – Ambient
B – Base or stud
C – Case
H – Heat Sink
J – Junction
L – Lead
S – Storage

(6) Surge current value is given for one cycle of 60 (or 50 for most non-U.S. types) sine wave, unless a pulse value in Pulse Width column is also given.
§ – Above 25°C

(8) A – Ambient
B – Base or stud
C – Case
J – Junction
L – Lead
S – Storage

(10) * – Two or more units in a single case (see Outline Drawing for terminal arrangement)
ϕ – Available with reverse polarity; consult manufacturer

SECTION 10 — VOLTAGE REGULATOR DIODES-POWER — SECTION 10

INCLUDES: Devices from 680 mV to 400 V

TYPE NO The manufacturer designated type number for the device.

TOLERANCE The total permissible variation of a quantity from a designated value. The allowable variation from the specified reference voltage.

NOM REF. VOLT The value of DC voltage across the device when it is biased to operate in its breakdown region at the given test current.

MAX DISS The maximum allowable device power dissipation resulting from current flow when the unit is biased in its breakdown region at 25°C ambient temperature.

TEST CUR The current at which the nominal reference voltage is specified.

DYN IMP The small signal impedance of the device when it is biased to operate in its breakdown region at the given test current.

TEMP COEFF The ratio of the change in the respective reference voltage usually expressed as a percentage of reference voltage, to the change in temperature. This ratio is the average value for the total temperature change.

MAX TEMP The maximum allowable ambient operating temperature.

DWG NO. The location of the device drawing.

10. VOLTAGE REGULATOR DIODES, POWER

LINE No.	4 TYPE No.	3 TOL. ± (%)	1 NOM. REF. VOLT. (V)	2 MAX. DISS. @ 25°C (W)	TEST CUR. Izt (A)	MAX. DYN. IMP. (Ω)	TEMP. COEFF Tc MAX	MAX. TEMP (°C)	DWG. No.
✪	✪ (2)	(3)		(5)		(7)	(8)	(9)	(10)

✪ SYMBOLS AND CODES AT TOP OF FIRST INTERPRETER PAGE, DI-1.

Continued Next Page

SECTION 10 VOLTAGE REGULATOR DIODES-POWER (CONT'D) SECTION 10

(2) § - Available to MIL Spec.
- Double anode
† - Reference amplifier
* - Forward voltage reference diode
$ - Germanium

(3) † - Available in selected voltages and/or tolerances; consult manufacturers listed.

(5) § - Above 25°C
† - Typical

(7) † - Typical dyn. imp.

(8) $T_C = \frac{\Delta V / \Delta T}{V}$

Note: T_C is expressed in units of (10^{-4}/°C)

Eg: Column entry is 5.0, therefore $T_C = 5.0\ (10^{-4}/°C) = .05\%/°C$

- Maximum
T - Voltage-time stability per 1000 hrs. in ppm
p - ppm/°C
V - Temp. Co. in V/ C(max)

(9) A - Ambient
B - Base or stud
C - Case
J - Junction
L - Lead
R - Max. reference temp. for specified temp. coeff.
S - Storage

(10) ⊘ - Available with reverse polarity; consult manufacturer
△ - Mounted in an oven
⌀ - Available in matched pairs; consult manufacturer
$ - Two matched units in separate cases

SECTION 11 RECTIFIERS-HIGH VOLTAGE SECTION 11

INCLUDES: Devices to 7 kA

TYPE NO. The manufacturer designated type number for the device.

PIV Peak inverse voltage (also peak reverse voltage and working peak reverse voltage, V_{RWM}). The maximum instantaneous value of the reverse voltage, excluding all transient voltages, which occurs across a semiconductor rectifier diode.

MAX AVG FWD DC CURRENT I_0 The absolute maximum allowable value of the forward current averaged over a full cycle (180° conduction angle, 60 Hz).

MAX AVG FWD DC CURRENT AT TEMP The temperature at which the maximum average forward current is specified.

MAX SURGE CUR PEAK 1 Cy The absolute maximum allowable peak forward surge current at 60 Hz (sine wave) non-repetitive for 180° conduction angle.

MAX SURGE CUR PEAK PULSE WIDTH The specified pulse width for the surge current other than 180° conduction angle at 60 Hz sine wave.

MAX TEMP The maximum allowable operating temperature.

MAT The material used in manufacturing the device.

DWG NO. The location of the device drawing.

11. RECTIFIERS, HIGH VOLTAGE

LINE No.	4 TYPE No.	1 PIV (V)	MAX AVG FWD DC CURRENT 2 Io (A)	3 @ TEMP (°C)	MAX RATING SURGE CURR PEAK 1 Cy (A)	PULSE WIDTH (s)	MAX. TEMP (°C)	DESCRIPTION MAT	DRAWING No.
✪	✪	(2)	(3)	(4)	(5)	(6)	(8)	✪	(10)

✪ SYMBOLS AND CODES AT TOP OF FIRST INTERPRETER PAGE, DI-1.

Continued Next Page

DIODE — INTERPRETER
SYMBOLS & CODES EXPLAINED

SECTION 11 — RECTIFIERS-HIGH VOLTAGE (CONT'D) — SECTION 11

(2) – Also listed in Section 6 under Radiation Resistant Device (Use 9) (also see above)

(3) $ – Max. cont. working voltage (PIV not specified)
% – Max. non-repetitive peak transient reverse voltage

Following symbols indicate a max. cont. working voltage rating lower than the PIV value given in the column.
△ – WV 90-99% of given PIV
* – WV 89% or less of given PIV

(4) (Rating for resistive load unless otherwise indicated)
ϕ – Capacitance load

(5) (Value given indicates temp. at which derating starts, unless otherwise indicated)
$ – Temperature at which derating starts is not specified.
A – Ambient
B – Base or stud
C – Case
H – Heat Sink
J – Junction
L – Lead
S – Storage

(6) Surge current value is given for one cycle of 60 (or 50 for most non-U.S. types) sine wave, unless a pulse value in Pulse Width column is also given.
§ – Above 25°C

(8) A – Ambient
B – Base or stud
C – Case
J – Junction
L – Lead
S – Storage

(10) ϕ – Multi-junction device in two-terminal case
* – Two or more units in a single case (see Outline Drawing for terminal arrangement)
⊄ – Available with reverse polarity; consult manufacturer
% – Available with Heat Sink
▼ – For use in oil or Freon
♦ – Single Operation

SECTION 12 — MISCELLANEOUS DIODES — SECTION 12

TYPE NO. The manufacturer designated type number for the device.
USE A numeric code representing the basic device function or use.
MAT The material used in manufacturing the device.
DWG NO. The location of the device drawing.
TECHNICAL DATA A brief description of the device and/or its electrical parameters.

12. MISCELLANEOUS DIODES

IN ORDER OF (1) USE (2) MAT AND (3) TYPE NO.

LINE No.	3 TYPE No.	1 USE	DESCRIPTION 2 MAT.	DWG. No.	TECHNICAL DATA
✪	✪	(3)	(4)	(5)	(6)

(3)
1. – Current Regulator/Limiter Diode
2. – Logarithmic-Conversion Diode
3. – Matched Configuration
4. – Noise-Generator Diode
6. – Schottky-barrier Diode
7. – Transient Suppressor Diode
8. – UHF Detector Diode
9. – UHF Mixer Diode
10. – Varistor
11. – Additional Diode Devices

(5) ⊄ – Available with reverse polarity; consult manufacturer
△ – Available in matched pairs; consult manufacturer
$ – Two matched units in separate cases
† – Available in different package configuration; consult manufacturer
▼ – Available with reverse and/or double anode polarity
* – Multiple Devices In One Package
§ – Available W/Non Polarized; Consult Mfr.

(4) ZnS – Zinc Sulfide
ZnO – Zinc Oxide
CS – Cadmium Sulfide
SnO – Tin Oxide

(6) △ – Optional characteristic, varies within limited tolerance; consult mfr.

✪ SYMBOLS AND CODES AT TOP OF FIRST INTERPRETER PAGE, DI-1.

SCHEMATIC/OUTLINE DRAWINGS

DRAWING NO.	PAGE
D00-1	449
D00-1a-r	449
D00-2	449
D00-2a-n	449
D00-3	449
D00-3a-n	449
D00-4	449
D00-5	449
D00-5a-b	449
D00-7	450
D00-7a-j	450
D00-8	450
D00-8a-b	450
D00-9	450
D00-9a-c	450
D00-10	450
D00-10a-d	450
D00-11	450
D00-12	450
D00-12a	450
D00-14	450
D00-15	450
D00-16	451
D00-17	451
D00-18	451
D00-19	451
D00-19a	451
D00-21	451
D00-21a	451
D00-23	451
D00-24	451
D00-25	451
D00-26	451
D00-27	452
D00-28	452
D00-30	452
D00-31	452
D00-32	452
D00-34	452
D00-35	452
OUTLINE DRAWINGS	
A1	453
A1aabm	453
A2	459
A2a-x	459
A3	459
A3c	459
A3c-az	459
A6	459
A6a-f	459
A9	459
A9a-r	459
A19	460
A19a-d	460
A21	460
A21a-b	460
A24	460
A24a-d	460
A26	460
A31	460
A31a-ac	460
A32	460
A32a-d	460
A34	460
A34a-e	460
A41	462
A41a-q	462
A47	462
A47a-b	462
A50	462
A50a-h	462
A52	462
A52a-s	462
A53	462
A54	462
A55	462
A56	462
A56a-b	462
A60	463
A60b-au	463
A69	463
A69a-ax	463
A73	463
A73a-b	463
A79	463
A79a-d	463
A82	463
A82a-h	463
A83	464
A83a-de	464
A86	464
A86a-c	464
A87	464
A89	464
A89a-e	464
A94	465
A94a-af	465
A97	465
A97a-c	465
A99	465
A109	465
A109a-o	465
A115	465
A123	465
A134	465
A134a-e	465
A138	465
A138a-z	465
A145	461
A146	461
A146a-u	461
A149	461
A154	461
A159	461
A159a-b	461
A163	461
A167	461
A167a-ap	461
A168	461
A168c-m	461
A171	466
A171a-p	466
A179	466
A179a-c	466
A182	466
A185	466
A185a-h	466
A188	466
A189	466
A221	466
A221a-g	466
A230	466
A231	466
A246	467
A248	467
A248a-q	467
A249	467
A249a-n	467
A257	467
A257a-b	467
A265	467
A266	467
A266a-c	467
A267	467
A267a-k	467
A268	467
A268a-e	467
A271	468
A271a-g	468
A274	468
A276	468
A276a	468
A277	468
A277a-s	468
A277t	468
A283	468
A283a-f	468
A284	468
A284a	468
A292	468
A292a	468
A294	469
A294a-l	469
A296	469
A297	469
A297a-d	469
A298	469
A298a-ar	469
A298as	469
A298at	469
A299	469
A305	470
A308	470
A310	470
A311	470
A312	470
A313	470
A313a-n	470
A313p	470
A314	470
A318	470
A319	471
A319a-g	471
A321	471
A329	471
A329a-b	471
A330	471
A331	471
A333a-f	471
A333g	471
A333j	471
A333k	471
A333l	471
A334a-c	471
A337	471
A340	471
A340a-c	471
A344	472
A349a-ae	476
A347	472
A347a	472
A352	472
A352a	472
A355	472
A356	472
A356a-c	472
A359	473
A360	473
A363	473
A364	473
A372	473
A374	474
A374a	474
A377	474
A378	474
A380	474
A380a-d	474
A382	474
A383	474
A386	474
A387	475
A388	475
A388a	475
A389	475
A390	475
A391	475
A392	475
A393	475
A393a-e	475
A394	475
A394a-f	475
A395	476
A395a-c	476
A397	476
A397a	476
A398a-q	476
A403	476
A404	476
A405	476
A407	476
A408	476
A409	476
A409a-h	476
A411	477
A412	477
A416	477
A421	477
A421a-c	477
A422	477
A423	477
A423a	477
A424	478
A425	478
A425a	478
A426	478
A427	478
A428	479
A428a-f	479
A430	479
A431	479
A432	479
A433	479
A435	480
A437	480
A437a-b	480
A439	480
A440	480
A440a-e	480
A441	480
A442	482
A443	482
A443a-f	482
A444	482
A445	482
A446	481
A446a-m	481
A447	481
A447a-b	481
A448	481
A449	481
A449a-f	481
A450	481
A452	481
A452a-d	481
A453	481
A453a	481
C1	483
C1a-h	483
C3	483
C3c-k	483
C5a	483
C7	483
C8	483
C9	483
C12	483
C12a	483
C13	483
C13a	483
C14	483
C15	484
C15a-b	484
C18	484
C18c-g	484
C23	484
C29	484
C29a-u	484
C42	485
C42a-x	485
C63	485
C63b-l	485
C74	485
C77	485
C101	485
C112	486
C144	486
C156	486
C162	486
C186	486
C188	486
C188a-f	486
C189	486
C189a-d	486
C190	487
C190a	487
C191	487
C199	487
C202	488
C202a	488
C204	488
C204a	488
C205	488
C205a	488
C206	487
C207	488
C208	488
C208a	488
C209	488
C209a-kn	488
C214	488
C214a	488
C216	489
C216a-l	489
C218	489
C218a-h	489
C219	489
C219a-n	489
C222	489
C222a-p	489
C224	489
C224a-k	489
C229	489
C230	490
C230a-b	490
C231	490
C231a-c	490
C232	490
C232a	490
C233	490
C233a	490
C234	490
C234a	490
C235	490
C235a-b	490
C236	491
C237	491
C237a-b	491
C238	491
C238d	491
C239	491
C239a-b	491
C240	492
C240a-e	492
C241	492
C241a-c	492
C242	492
C242a-g	492
C243	492
C243a	492
C244	492
C244a-b	492
C245	492
C245a-g	492
C246	493
C246a-p	493
C247	493
C247a	493
C248	493
C248a-c	493
C249	493
C249a	493
C250	494
C250a	494
C251	494
C252	494
C253	495
C254	494
C255	494
C256	495
C257	495
C257a	495
C258	495
C258a	495
C259	495
C260	496
C261	496
C262	496
C263	496
C264	496
C265	496
C267	496
C268	496
DL14	503
DL14ad	503
DL16au-cp	503
DL18h	503
DL28p	503
DO1	504
DO2	504
DO3	504
DO4	504
DO5	505
DO7	505
DO8	505
DO9	505
DO10	506
DO11	506
DO12	506
DO13	506
DO14	506
DO15	507
DO17	507
DO18	507
DO21	507
DO27	507
DO29	507
DO30	508
DO34	508
DO35	508
DO39	508
DO41	508

DI12

DIODE-DRAWING INDEX

OUTLINE DRAWINGS

DRAWING NO.	PAGE
DO200	508
DO200aa-ab	508
DO201	508
DO203	509
DO204	509
DO204aa-ap	509
E200	508
E200a-b	508
E201	508
E203	509
E204	509
E204a-p	509
F3	510
F3p	510
F8	510
F10	510
F10af	510
F12	510
F12r-aw	510
F13	510
F13a-d	510
F22	510
F22a-h	510
F27	511
F27a-d	511
F29	511
F42	511
F51	511
F51a-c	511
F56a-ad	511
F57	511
F57a-h	511
F65	511
F73	512
F76	512
F82	512
F86	512
F86a-g	512
F95	512
F95a	512
F97	512
F97a-b	512
F99	512
F99a-b	512
F103	512
F107	512
F107a	512
F108	513
F109	513
F109a-c	513
F119	513
F122	513
F123	513
F124	513
F125	513
F128	513
F129	514
F130	514
F131	514
F132	514
F133	514
F133a-n	514
F134	514
F135	514
F136	515
F137	515
F138	515
F139	515
F140	515
F141	515
F142	515
F143	515
F143a-e	515
F144	515
F145	515
F146	515
F147	516
F147a-b	516
F148	516
F149	516
L6	517
L8a-g	517
M4	517
M4a-b	517
M9a	517
M12	517
M13	517
M21	517
M22	517
M26	517
M38	517
M38a-ab	517
M45	518
M45a-e	518
M50	518
M54	518
M54a-m	518
M56	518
M56a-f	518
M58	518
M62	518
M62a-h	518
M65	518
M65a-b	518
M66	518
M76	519
M80	519
M80a-c	519
M82	519
M82a-c	519
M84	519
M84a-cc	519
M86	520
M86a-e	520
M91	520
M92	520
M101	520
M101a-v	520
M105	520
M106	520
M117	520
M117a-h	520
M118	521
M118a	521
M122	521
M122a-i	521
M123	521
M123a	521
M124	521
M125	521
M126	521
M126a-k	521
M139	521
M163	521
M168	521
M169	521
M174	521
M175	521
M176	522
M176a	522
M189	522
M189a	522
M204	522
M204a-z	522
M212	522
M212a-n	522
M213	522
M214a-b	522
M226	522
M228	522
M228a-e	522
M239	523
M239a-s	523
M240	523
M240a-i	523
M248	523
M267	523
M280	523
M280a-b	523
M291	523
M291a-h	523
M294	523
M294a-b	523
M307	523
M324	524
M324a-h	524
M326	524
M326a-l	524
M338	524
M338a	524
M343	524
M346	524
M357	524
M357a-c	524
M366	524
M366a	524
M370	524
M370a	524
M378	524
M383	524
M396	525
M401	525
M412	525
M423	525
M423a-b	525
M426	525
M430	525
M441	525
M445	525
M445a-d	525
M447	525
M458	526
M460	526
M460a-c	526
M462	526
M463	526
M471	526
M486	526
M486a-b	526
M491	526
M491a-g	526
M492	527
M493	527
M495	527
M496	527
M500	527
M501	527
M501a-b	527
M519	528
M519a-e	528
M523	528
M533	528
M535	528
M535a	528
M543	528
M560	528
M560a-g	528
M565	528
M566	528
M568	528
M568a	528
M571	529
M571a-c	529
M574	529
M584	529
M584a	529
M586	529
M594	529
M594a-h	529
M622	529
M630	529
M637	529
M637a-c	529
M643	529
M647	529
M650	530
M666	530
M666a	530
M681	530
M697	530
M697a	530
M698	530
M713	530
M713a-b	530
M722	530
M737	530
M746	530
M746a	530
M747	531
M747a	531
M748	531
M750	531
M754	531
M757	531
M759	531
M764	531
M764a	531
M765	531
M766	531
M769	531
M771	532
M771a-f	532
M774	532
M775	532
M775a	532
M776	532
M777	532
M778	532
M778a-b	532
M784	532
M785	532
M785a-b	532
M818	532
M823	533
M824	533
M831	533
M832	533
M839	533
M839a-b	533
M840	533
M840a	533
M841	533
M845	533
M846	533
M846a	533
M849	534
M850	534
M851	534
M852	534
M853	534
M854	534
M856	534
M858	534
M859	535
M863	535
M863a-j	535
M864	535
M864a-g	535
M865	535
M865a-d	535
M867	535
M867a	535
M873	536
M879	535
M880	535
M880a	535
M882	536
M885	536
M887	536
M890	536
M894	536
M894a-e	536
M896	536
M901	537
M903	537
M904	537
M915	537
M916	537
M919	537
M926	537
M936	538
M936a-az	538
M937	538
M937a-b	538
M941	538
M941a-d	538
M942	538
M942a-aa	538
M943	538
M945	537
M946	539
M947	539
M948	539
M948a-r	539
M950	539
M950a-be	539
M953	539
M954	539
M957	539
M958	540
M959	540
M960	540
M962	540
M968	540
M969	540
M973	540
M974	540
M975	540
M975a	540
M976	541
M977	541
M978	541
M979	541
M980	541
M981	541
M981a	541
M982	541
M983	542
M984	542
M985	542
M986	542
M987	542
M989	542
M990	542
M992	542
M992a-b	542
M993	542
M994	571
M995	571
M996	543
M997	543
M998	543
M999	543
M1000	543
M1003	543
M1003a-k	543
M1004	543
M1007	543
M1007a	543
M1007a-b	543
M1008	544
M1008a	571
M1009	544
M1010	544
M1014	544
M1014a	544
M1016	544
M1017	546
M1018	544
M1019	544
M1021	544
M1024	544
M1026	544
M1027	544
M1029	545
M1030	545
M1030a-b	545
M1031	545
M1031a-b	545
M1033	545
M1033a-f	545
M1035	545
M1036	545
M1037	545
M1040	545
M1041	545
M1043	546
M1044	546
M1045	546
M1046	546
M1047	546
M1048	546
M1049	547
M1049a-c	547
M1050	547
M1055	547
M1056	547
M1058	547
M1059	547
M1060	547
M1063	547
M1063a	547
M1064	548
M1065	548
M1066	548
M1067	548
M1068	548
M1069	548
M1070	548
M1071	548
M1073	548
M1073a-c	548
M1074	548
M1075	549
M1075a-f	549
M1076	549
M1077	549
M1077a-c	549
M1078	549

DI13

OUTLINE DRAWINGS

DRAWING NO.	PAGE	DRAWING NO.	PAGE	DRAWING NO.	PAGE	DRAWING NO.	PAGE	DRAWING NO.	PAGE	DRAWING NO.	PAGE	DRAWING NO.	PAGE
M1079	549	M1150	557	M1212a-b	567	M1266	621	M1325	588	S19	599	S134	603
M1080	549	M1151	558	M1213	567	M1267	622	M1326	589	S19a-ah	599	S134a	603
M1081	549	M1152	558	M1213a-b	567	M1268	577	M1327	589	S20	599	S143	604
M1082	549	M1153	558	M1214	567	M1269	577	M1327a	589	S20a	599	S143a	604
M1084	549	M1155	558	M1215	567	M1270	577	M1328	589	S21	599	S154	604
M1085	550	M1155a	558	M1216	567	M1271	578	M1328a	589	S21a-h	599	S168	604
M1086	550	M1158	558	M1217	567	M1272	578	M1329	589	S23	599	S168a-b	604
M1087	550	M1159	558	M1218	568	M1273	578	M1330	589	S24	599	S171	604
M1088	550	M1161	559	M1219	568	M1274	578	M1331	590	S24a-d	599	S171a-y	604
M1089	550	M1162	559	M1220	568	M1274a-c	578	M1332	590	S25	599	S181	604
M1090	550	M1162a	559	M1220a	568	M1275	578	M1333	589	S25a-c	599	S181a-b	604
M1090a	550	M1163	559	M1221	569	M1275a	578	M1334	589	S26	600	S187	604
M1091	550	M1163a	559	M1221a	569	M1276	579	M1334a	589	S27	600	S187a-e	604
M1092	550	M1164	559	M1222	569	M1277	579	M1335	591	S29	600	S193	604
M1093	551	M1164a-b	559	M1223	569	M1277a	579	M1336	591	S29a-e	600	S193a-b	604
M1094	551	M1165	559	M1224	569	M1278	579	M1337	591	S31	600	S203	605
M1095	551	M1166	559	M1225	569	M1278b	579	M1338	591	S31a	600	S203a-d	605
M1096	551	M1166a-g	559	M1226	569	M1279	579	M1339	591	S33	600	S206	605
M1096a-ad	551	M1171	559	M1227	569	M1279a	579	M1340	592	S35	600	S221	605
M1097	551	M1176	560	M1228	570	M1280	579	M1341	592	S41	600	S245	605
M1098	551	M1176a-g	560	M1229	570	M1281	579	M1342	592	S41a-c	600	S245a	605
M1099	551	M1177	560	M1230	570	M1283	580	M1343	592	S42	600	S249	605
M1101	551	M1180	560	M1231	570	M1283a-b	580	M1344	592	S42a	600	S249a-b	605
M1103	551	M1180a-b	560	M1232	570	M1284	580	M1345	592	S43	600	S277	605
M1105	552	M1181	561	M1233	571	M1285	580	M1346	592	S43a	600	S281	605
M1107	552	M1182	561	M1234	571	M1286	580	M1347	593	S48	601	S281a	605
M1107a-m	552	M1183	561	M1235	571	M1287	580	M1348	593	S52	601	S290	605
M1108	552	M1184	561	M1236	572	M1288	581	M1349	593	S52a-d	601	S292	605
M1109	552	M1185	561	M1237	572	M1288a-b	581	M1350	593	S61	601	S292a-b	605
M1110	552	M1186	562	M1237a-b	572	M1289	581	M1351	593	S65	601	S293	605
M1112	553	M1186a	562	M1238	572	M1290	582	M1352	593	S65a	601	S305	606
M1115	553	M1187	562	M1239	570	M1291	582	M1353	593	S66	601	S322	606
M1116	553	M1188	562	M1240	572	M1292	582	M1354	594	S66a-c	601	S322a-c	606
M1117	553	M1188a-b	562	M1241	572	M1293	582	M1355	594	S67	601	S324	606
M1118	553	M1189	562	M1242	572	M1294	582	M1356	594	S67a	601	S329	606
M1119a-i	553	M1190	563	M1243	573	M1295	583	M1357	594	S68	601	S339	606
M1120	554	M1190a-g	563	M1244	573	M1296	583	M1358	594	S68a-d	601	S339a	606
M1120a-o	554	M1191	563	M1244a	573	M1299	584	M1359	594	S72	601	S344	606
M1122	554	M1192	563	M1245	573	M1300	584	M1360	595	S72a-n	601	S345	606
M1123	554	M1193	564	M1246	573	M1301	584	M1361	595	S81	601	S352	606
M1124	554	M1193a-k	564	M1246a-b	573	M1302	585	M1362	595	S82	602	S352a-b	606
M1125	554	M1194	564	M1247	573	M1303	584	M1363	595	S82a-b	602	S403	606
M1126	554	M1194a	564	M1248	573	M1304	584	M1364	596	S83	602	S403a	606
M1127	554	M1195	564	M1249	573	M1305	585	M1364a	596	S83a-b	602	S407	607
M1128	555	M1195a	564	M1250	574	M1306	585	M1365	596	S87	602	S407a-c	607
M1129	555	M1196	563	M1251	574	M1307	585	M1366	596	S87a-j	602	S408	607
M1130	555	M1197	564	M1252	574	M1308	586	M1367	596	S88	602	S408a-e	607
M1131	555	M1197a	564	M1252a	574	M1309	586	M1368	596	S96	602	S416	607
M1132	555	M1198	564	M1252b	574	M1310	586	M1369	596	S96a-j	602	S421	607
M1133	555	M1198a	564	M1253	574	M1311	586	P3	597	S102	602	S422	607
M1134	555	M1201	564	M1254	574	M1312	587	P3a-d	597	S103	602	S422a	607
M1135	556	M1202	565	M1255	574	M1313	587	P5	597	S112	602	S423	607
M1136	556	M1203	565	M1256	574	M1314	586	S4	598	S112a-c	602	S426	608
M1138	556	M1203a-b	565	M1257	574	M1315	587	S4a-ah	598	S117	603	S427	608
M1140	556	M1204	565	M1258	574	M1316	587	S8	598	S120	603	S433	608
M1141	556	M1205	565	M1259	575	M1317	587	S8a-t	598	S120a-j	603	S435	608
M1143	557	M1206	565	M1259a-e	575	M1318	587	S11	598	S122	603	S435a-k	608
M1144	557	M1207	566	M1260	575	M1319	588	S11a-f	598	S122a-b	603	S436	608
M1146	557	M1208	566	M1261	575	M1320	588	S12	598	S125	603	S437	608
M1146a	557	M1209	566	M1262	575	M1321	588	S12a-s	598	S125a-d	603	S438	608
M1147	557	M1210	566	M1263	576	M1322	588	S14	598	S128	603	S439	608
M1148	557	M1211	566	M1264	576	M1323	588	S14b-t	598	S128a-b	603	S441	609
M1149	557	M1212	567	M1265	576	M1324	588	S16	598	S132	603	S441a	609

DI14

DIODE-DRAWING INDEX

OUTLINE DRAWINGS

DRAWING NO.	PAGE	DRAWING NO.	PAGE	DRAWING NO.	PAGE	DRAWING NO.	PAGE	DRAWING NO.	PAGE	DRAWING NO.	PAGE	DRAWING NO.	PAGE
S442	609	S478	611	S514	615	S535	617	S564	622	TO220	633	U38	628
S450	609	S480	611	S515	615	S536	617	S565	622	TO240	626	U38a-b	628
S450a-j	609	S481	611	S516	615	S537	617	S565a-b	622	TO236	633	U39	628
S452	609	S487	612	S517	615	S538	617	S566	622	TO247	626	U39a-d	628
S453	609	S487a	612	S518	615	S540	618	S567	622	U3	627	U40	629
S453a	609	S488	612	S519	615	S541	618	S567a	622	U4	627	U41	629
S455	609	S488a-b	612	S519a	615	S542	618	S568	622	U4a-b	627	U42	629
S456	609	S491	612	S520	615	S543	618	S569	622	U5	627	U43	629
S457	609	S492	612	S520a	615	S544	618	S571	619	U5a-h	627	U44	629
S458	610	S493	612	S521	615	S545	618	TO3	623	U10	627	U45	629
S458a-g	610	S493a-e	612	S521a	615	S546	619	TO5	623	U10a-j	627	U46	630
S459	610	S494	612	S522	615	S547	619	TO18	623	U11	627	U47	630
S459a-d	610	S495	612	S522a	615	S548	619	TO33	623	U12	627	U48	630
S464	610	S496	613	S523	615	S549	619	TO39	623	U19	627	U49	630
S464a-c	610	S498	613	S523a	615	S550	619	TO46	623	U19a-p	627	U50	630
S465	610	S499	613	S524	616	S551	620	TO52	624	U20	627	U50a	630
S465a-e	610	S502	613	S525	616	S552	620	TO66	624	U20a-k	627	U51	630
S466	610	S503	613	S527	616	S553	620	TO71	624	U23	627	U52	630
S466a	610	S505	613	S527a	616	S554	620	TO72	624	U25	627	U53	630
S467	610	S506	614	S528	616	S555	621	TO78	624	U26	628	U53a	630
S468	610	S506a-p	614	S529	616	S556	621	TO86	624	U27	628	V1	631
S471	611	S507	614	S530	616	S557	621	TO92	625	U35	628	Y218/TO218	632
S472	611	S508	614	S531	616	S559	621	TO105	626	U35a-c	628	Y220	633
S474	611	S509	614	S532	617	S560	621	TO106	625	U36	628	Y240	633
S475a-b	611	S510	614	S532a-b	617	S561	621	TO116	626	U37	628	GS1	634
S476	611	S512	615	S533	617	S562	622	Y218/TO218	632	U37a-b	628	GS2	634
S477	611	S513	615	S534	617	S563	622						

DI15

SYMBOLS & CODES COMMON TO D.A.T.A. DIODE BOOK

ALL VALUES ARE TYPICAL AND @ 25°C UNLESS OTHERWISE INDICATED BY COLUMN HEADINGS OR SYMBOLS.

TYPE NUMBER

△ % # ☑ Used when more than one manufacturer assigns the same type number to different devices, or when two or more like devices are listed with different test parameters.

– RT.....Indicates replacement type; consult manufacturer.

#1, #2,...Used when there is more than one electrical function or package for the same type number.

REVERSE POLARITY TYPES

Note: Availability of reverse polarity types is indicated by a ☑ symbol in the Dwg. No. column.

FOLLOWING LINE NO.

▽ – New Type
◆ – Revised Specifications
– Non-JEDEC type manufactured outside U.S.A.

UNDER DESCRIPTION

UNDER MATERIAL (and Process)
GA – Gallium Arsenide
Ge – Germanium
GP – Gallium Phosphide
GS – Gallium Antimonide
Se – Selenium
SG – Germanium Silicon
Si – Silicon
* – Alloyed

△ – Diffused
∅ – Gold Bonded
† – Indium Bonded
☑ – Point Contact
– Planar
§ – Mesa
$ – Epitaxial
◆ – Schottky Barrier
▽ – Ion Implanted

ENGLISH-RUSSIAN ALPHABET TRANSLITERATION FOR USSR TYPES

ENGLISH	RUSSIAN	ENGLISH	RUSSIAN
A	А	L	Л
B	Б	M	М
V	В	N	Н
G	Г	O	О
D	Д	P	П
E	Е	R	Р
SZ	Ж	S	С
I	И	T	Т
K	К	U	Y

MANUFACTURERS' CODES AND NAMES

D.A.T.A. MFRS.' CODE		MANUFACTURERS
AEGG		AEG-Telefunken-Anlagentechnik
AEIL		Marconi Electronic Devices, Ltd.
ALGG	*	Telefunken Electronic, Abt. Verkaufsforderung
ALP		Alpha Industries, Inc.
AMR		American Microsemiconductor
AMX		Amex Electronics, Inc.
APD	*	American Power Devices, Inc.
APX		Amperex Electronic Co.
ASGI		Ansaldo Electronica Industriale S.p.A.
ASI		Advanced Semiconductor, Inc.
BBCG		Brown, Boveri, & Cie Aktiengesellschaft, Div. Semi & Converters
BELI		Bharat Electronics, Ltd.
CDI	*	Compensated Devices, Inc.
CDIL		Continental Device India, Ltd.
CEI		Calvert Electronics International, Inc.
CEN	*	Central Semiconductor Corp.
CHE	★	Cherry Semiconductor Corp.
CODI	★	CODI Corp.
COO	★	Coors Components, Inc.
CRI	*	Crimson Semiconductor, Inc.
CSD		Conditioning Semiconductor Devices Corp.
DGE		Digitron Electronics Corp.
DII	*	Diodes, Inc.
DIO		Dionics, Inc.
DIT	*	Diode Transistor Co., Inc.
DIX	★	Diotec Electronics Corp.
DTL		E.G. Datel
EAS		Eastron Corp.
EDI		Electronics Devices, Inc.
EDL	*	Edal Industries, Inc.
ELT		Elite Semiconductor Products, Inc.
ESP		Espey Mfg. & Electronics Corp.
ETC		Electronic Transistor Corp.
ETPC		Murata-Erie North America, Inc.
FEC		Fuji Electric/Collmer Semiconductor
FERB		Ferranti Electronics, Ltd.
FGRS	*	Fagor Electrotecnica
FSC		Fairchild Camera & Instrument/ Discrete Division
GBL	★	GigaBit Logic, Inc.
GDC		General Diode Corp.
GESY	*	General Electric Co.
GHZ		Frequency Sources, Inc.
GIC		General Instrument Corp.
GPD		Germanium Power Devices Corp.
GSE	*	General Semiconductor Industries, Inc.
GTC		General Transistor Corp.
GTN		Gentron Corp.
HAS		Harris Semiconductor

★ New Manufacturer
* See Manufacturers' Sales Offices Section

Continued

MANUFACTURERS' CODES AND NAMES

D.A.T.A. MFRS.' CODE		MANUFACTURERS
HIEE		W & G Instruments, Ltd.
HITJ		Hitachi, Ltd., Semicon & IC Div.
HPA		Hewlett Packard, Microwave Semicon. Div.
HSE	*	Hybrid Semiconductor & Electronics, Inc.
HTN	*	Hi-Tron Semiconductors Corp.
IDC	*	International Diode Corp.
IDI		International Devices, Inc.
IMTM		Industria Mexicana Toshiba
INC		International Components Corp.
INL		Intersil, Inc.
INR		International Rectifier Corp.
INRI		International Rectifier Corp.
INRJ		International Rectifier Corp.
ITTG	*	ITT Semiconductors Intermetall
KSI	*	Knox Semiconductor, Inc.
LAM		Lambda Semiconductors
LTE		Lansdale Transistor & Electronics, Inc.
LUCB	*	Lucas Electrical Electronics & Systems
MAL		Mallory Distributor Products, Div. of Mallory Component Group
MATJ		Matsushita Electronics Corp., (Panasonic)
MCY		Mercury Electronic Co.
MDC		Microwave Diode Corp.
MEHK		Micro Electronics, Ltd.
MIC		M/A Com., Inc.
MICB		Microwave Associates, Ltd.
MISI		Mistral S.p.A.
MITJ		Mitsubishi Electric Corp.
MOTA		Motorola Semiconductor Prods.
MSC		Microsemi Corp.
MULB		Mullard Limited
NAT	★	National Electronics
NECE		NEC Electronics U.S.A., Electron Div.
NECJ		Nippon Electric Co.
NJRC		New Japan Radio Co., Ltd.
NJS		New Jersey Semiconductor
NSC		National Semiconductor Corp.
ORIJ		Origin Electric Co., Ltd.
PDE		PD&E, Inc.
PHIN	*	Philips Electronic Components & Materials Div.
PIHS		Piher Semiconductors
PII		Parametric Industries, Inc.
POS	*	Power Semiconductors, Inc.
PPC		PPC Products Corp.
PRX	★	Powerex, Inc.
PSLI		Punjab Semiconductor Devices, Ltd.
QTC		Quantrad Corporation
RECT		Rectron, Ltd.
RFE		RF Electronics Inc.

★ New Manufacturer
* See Manufacturers' Sales Offices Section

Continued

MANUFACTURERS' CODES AND NAMES

D.A.T.A. MFRS.' CODE		MANUFACTURERS
RHM		ROHM Corporation
RHMJ		ROHM Co., Ltd.
RTCF	*	RTC-Compelec
RTN		Raytheon Company
SAKJ		Sanken Electric Co., Ltd.
SAR		ST.-Semicon, Inc.
SCA		Semicoa
SCE	*	Semiconductor Components, Inc.
SCH		Schauer Manufacturing Corp.
SCN	*	Semicon Components, Inc.
SDI		SDI, Inc.
SEKG	*	Semikron Int'l, Inc.
SELI		Semiconductors, Ltd.
SEN		Sensitron Semiconductor, Div.
SES	*	Semitronics Corp.
SET	*	Semtech Corp.
SGSI		SGS-ATES Componenti Elet. SPA
SHEJ		Shindengen Elect. Mfg. Co., Ltd.
SIEG		Siemens Aktiengesellschaft
SISI	★	Secowest Italia S.p.A.
SIX		Siliconix, Inc.
SLCB		Semitron, Limited
SLD	*	Solid State Industries, Inc.
SOD		Solitron Devices, Inc.
SONY		Sony Corp.
SPE	*	Space Power Electronics, Inc.
SPR		Sprague Electric Co.
SSI	*	Solid State Devices, Inc.
SST		Solid State, Inc.
SSX	★	Sussex Semiconductor, Inc.
SSY	*	Solid State Systems
STI	*	Semiconductor Technology, Inc.
STR		Syntar Industries, Inc.
SWT		Swampscott Electronics Co., Inc.
TCE		Teccor Electronics, Inc.
TCY		Teledyne Crystalonics, Inc.
THEF		Thomson-CSF/EFCIS
TIC	*	TIC Semiconductors
TOSJ		Toshiba Corp.
TRI		Trio Laboratories, Inc.
TRWM		TRW Microwave
TRWO		TRW Optoelectronics Div.
TRWS		TRW RF Device Div.
TSAJ		Tokyo Sanyo Electric Co.
TSN		Transistor Specialtys, Inc.
UNI		Unitrode Corporation
UPI	*	UPI Semiconductor, Div.
USSR		V/O Electronorgtechnica
UTX	★	Unitex
VALG		VALVO GmbH, Dept.
VARO	*	Varo Semiconductor, Inc.
VEC		Victory Engineering Corp.
VMI		Voltage Multipliers, Inc.
WAB		Walbern Devices, Inc.
WESB	*	Westcode Semiconductors

★ New Manufacturer
* See Manufacturers' Sales Offices Section

INTRODUCING THE NEW ALTERNATE SOURCE AND REPLACEMENT SERIES FROM D.A.T.A.BOOKS!

Find direct replacement and alternate source information for integrated circuits and semiconductors in one complete and up-to-date reference series – new, from D.A.T.A.BOOKS.

Listing more replacement information than any other electronic components reference source, use the new *Alternate Source and Replacement Series:*

- To locate replacements and alternate sources for active and discontinued devices.
- To determine if there is more than one manufacturer for a specific device.
- To find a substitution for a component temporarily unavailable or difficult to obtain.

Developed specifically for use by engineers, purchasing personnel, electronic maintenance engineers and other electronics professionals.

Each subscription includes two editions published semiannually.

The *Alternate Source and Replacement Series* includes:

Direct Replacement Guide – Discrete Semiconductors

Includes direct replacement information on more than 47,600 transistors, diodes, thyristors, optoelectronic devices and microwave devices from 352 manufacturers. Contains 349,000 replacement devices that have the same part number as the device being replaced. Look up a part number and find the names of the manufacturers who make the part.

Suggested Replacement/ Alternate Source Guide – Discrete Semiconductors

Includes suggested replacement information on more than 72,000 transistors, diodes, thyristors, optoelectronic devices and microwave devices provided by 100 manufacturers. Find 471,400 replacements with different part numbers by looking up the device number and locating one or more suggested replacement parts and their manufacturers.

Direct & Suggested Replacement Guide – Integrated Circuits

Includes both direct replacement and suggested replacement information for digital, interface, microprocessor, audio/video, linear and memory ICs.

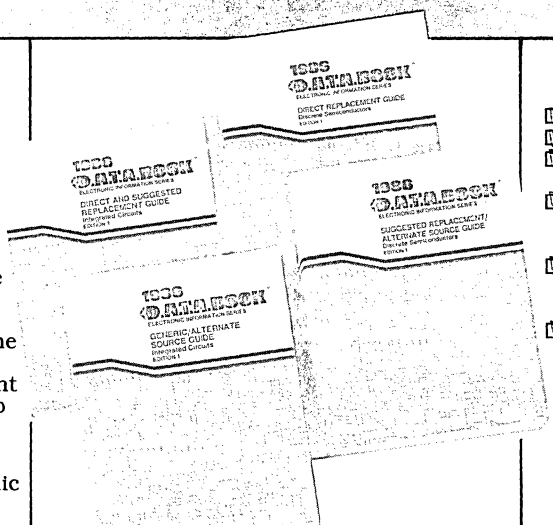

Special Offer – Save Money
See Order Form for Details

The Direct Replacement section contains information from 127 manufacturers on 11,640 parts with 39,460 substitute devices that have the same part number as the device being replaced. Simply look up a specific device by its part number and you'll find the names of the manufacturers who make, or who have made, that particular device.

The Suggested Replacement section lists more than 25,000 parts with 127,500 substitutes provided by 108 major manufacturers. In it, you'll find information on replacement devices with different part numbers than the part to be replaced.

Generic/Alternate Source Guide – Integrated Circuits

Includes alternate source information on over 110,000 digital, interface, microprocessor, audio/video, linear and memory ICs from over 289 manufacturers.

Section One lists ICs grouped and sorted by generic or root number. Use this section to look up a generic number and find devices that are possible alternates. Includes part numbers and manufacturers of devices closely related to your specifications.

Section Two lists ICs by part number. Look up the part number and manufacturer in this section and find its generic or root number. Using this number, you can look in Section One to find devices closely related to your specifications.

Alternate Source And Replacement Series Checklist

- ☑ Save time and effort.
- ☑ Determine second sources.
- ☑ Developed for easy use by engineers, purchasing personnel and others.
- ☑ Direct replacement information is provided, so there's no need to compare device specifications.
- ☑ Lists more than one manufacturer per device and more manufacturers than any other reference source.
- ☑ Find IC and semiconductor alternate source and replacement information in one series of D.A.T.A.BOOKS.

Three Other D.A.T.A.BOOKS Complete The Alternate Source And Replacement Series!

IC Functional Equivalence Guide

References more than 45,000 memory, digital, interface and linear devices from over 53 manufacturers. Technical sections list ICs that have been identified as being pin-for-pin compatible. Highlights those devices whose functional equivalence has been verified by an independent testing laboratory.

International Directory of ICs and Discrete Semiconductors
(Formerly Master Type Locator)

Consolidates over 270,000 ICs, discrete semiconductors, optoelectronic devices and microwave devices from over 500 manufacturers. Look up a part number, find the type of device, its current manufacturers – and find where to locate additional information on the device.

International Directory of Discontinued ICs and Discrete Semiconductors
(Formerly Discontinued Type Locator)

Consolidates over 150,000 ICs, discrete semiconductors, optoelectronic devices and microwave devices from over 500 manufacturers. Includes only devices that are discontinued – no longer in production. Look up a part number, find the type of device, its manufacturers – and find where to locate additional information on the device.

Actual Page Size 8½ x 11"

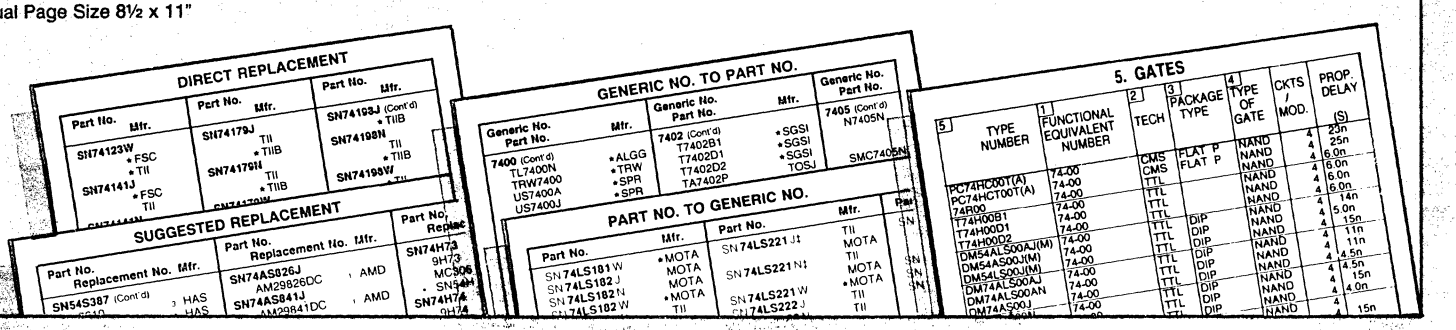

D.A.T.A.BOOKS® – Improved Format Significantl

Improved Format

With the Improved Format from D.A.T.A.BOOKS, device search is now even easier and faster than before. Both the Table of Contents and the technical sections have been expanded and are arranged by device function, making it easy to quickly find the exact page number for each device type you are looking for. Many new technical sections have been added to cover emerging technologies. Other features include an expanded manufacturers' profile, a reduction in the number of symbols used in each book, standardization of symbols from book to book and replacement of some columns with more useful data. In addition, hundreds of hours were spent in auditing the information that already appeared in the books and correcting any discrepancies that may have existed.

Integrated Circuits

All Integrated Circuits D.A.T.A.BOOKS include logic/block diagrams and outline drawings with dimensions for each device.

Audio/Video ICs – Provides information on 3,200 types from 60 manufacturers. Includes Functional Equivalent Index and Generic Product Index. Technical sections cover AGC circuits, Dolby circuits, audio/RF signal processing, video circuits, color TV circuits, stereo decoders, tuning circuits, CATV amplifiers, plus many other audio/video IC devices. Published annually.

Digital ICs – References 17,900 device types from 65 manufacturers. Includes Functional Equivalent Index and Generic Product Index. Technical sections cover gates, counters, arithmetic logic, timing devices, parity checkers, control logic, latches and many special digital devices. Published semiannually.

Digital and Audio/Video Discontinued Devices – Indexes 21,100 devices (1965 to 1986) from 143 manufacturers. Digital technical sections cover basic logic, timing, computational, checking and control, and other digital devices. Audio/Video technical sections cover audio amplifiers, audio/RF signal processing devices and many other audio/video devices. Published annually.

Interface ICs – Electrical, logical, physical and pin-out connection data on 17,200 devices from 99 manufacturers. Includes Functional Equivalent Index and Generic Product Index. Technical sections cover buffers, drivers, converters, switches, receivers/sensors, digital multiplexers, sense amps and many other interface IC devices. Published semiannually.

Interface & Memory Discontinued Devices – References 20,300 devices (1970 to 1986) from 119 manufacturers. Interface technical sections cover drivers, converters, switches, receivers/sensors and many other interface devices. Memory technical sections cover RAMs, ROMs, character generators, code converters, shift registers and many additional memory devices. Published annually.

Linear ICs – Provides characteristics for 13,800 types from 149 manufacturers. Includes Functional Equivalent Index and Generic Index. Technical sections cover analog signal processing devices, motor control circuits, operational amplifiers, phase locked loop devices, power management devices, RF/IF amplifiers, sensor circuits, telecommunication devices, timers, transistor arrays, voltage comparators, voltage references, wideband amplifiers and many other special function linear IC devices. Published semiannually.

Linear Discontinued Devices – Lists 8,600 devices (1969 to 1986) from 160 manufacturers. Covers amplifiers, analog signal processing devices, motor control circuits, operational amplifiers, phase locked loop devices, power management devices, RF/IF amplifiers, sensor circuits, telecommunication devices, timers, transistor arrays, voltage comparators, voltage references, wideband amplifiers and other linear devices. Published annually.

Memory ICs - Covers 15,900 types from 77 manufacturers. Includes Functional Equivalent Index and Generic Product Index. Technical sections cover RAMs, ROMs, character generators, CCDs, code converters, memory controllers, programmable gate arrays, shift registers and many special memory devices. Published semiannually.

Microprocessor ICs – References 9,700 types from 68 manufacturers. Includes Functional Equivalent Index and Generic Index. Technical sections cover microprocessors, microcomputers, digital signal processors, bus controllers, data encryption devices, disk controllers, memory management devices, transceivers, sync generators, programmable interval timers plus many other system and peripheral control IC devices. A supplementary section includes Instruction Sets. Published semiannually.

Modules/Hybrids – Details 10,700 linear and interface solid-state modules and hybrid IC devices from over 78 manufacturers. Technical sections cover operational, differential, RF/IF and wideband amplifiers; voltage regulators and comparators; synchro converters; drivers; multiplexers, VCOs; plus many other hybrid IC devices. Published annually.

Discrete Semiconductors

Diode – Information on 50,700 diodes from 153 manufacturers. Technical sections cover reference diodes, switching diodes (including fast-recovery rectifiers), diode arrays, UHF detectors, varistors, surge suppressors, matched configuration diodes plus many additional application specific diodes. Published annually.

Diode Discontinued Devices – Lists 51,200 devices (1969 to 1986) from 157 manufacturers. Technical sections cover silicon reference diodes, switching diodes, rectifiers, diode arrays/matrices and other miscellaneous diodes. Published annually.

Power Semiconductor – Covers 60,700 power devices from 161 manufacturers. Technical sections cover low, medium and high current rectifiers; fast recovery rectifiers; power zeners; power and silicon field-effect transistors; low, medium and high current SCRs; fast-switching SCRs; triacs and miscellaneous power transistors. Supplementary sections include JEDEC Gauge Designations for pin spacing/dimension information. Drawing Notes & Thyristors Lead Code Identification. Published annually.

Thyristor – Covers 45,100 types from 84 manufacturers. Technical sections cover Shockley diodes, reverse-blocking power triodes, bidirectional power triodes, trigger triodes, multigate devices, unilateral switches and many other thyristor devices. Supplementary sections include JEDEC Gauge Designations for pin spacing/dimension information and Lead Code Identification. Published annually.

Thyristor Discontinued Devices – Lists 31,400 devices (1971 to 1986) from 90 manufacturers. Technical sections cover trigger diodes; reverse-blocking, bidirectional, and miscellaneous power triodes; trigger triodes; multigate devices and other thyristor devices. Published annually.

Transistor – Lists 31,000 types from 128 manufacturers. Technical sections cover low-power transistors, field-effect-transistors (FETs), high-power transistors, switching transistors plus many additional application-specific transistors. JEDEC Gauge Designations for pin spacing/dimension information, and Lead Code Identification Guide. Published annually.

Transistor Discontinued Devices – Lists 16,700 devices (1956 to 1986) from 187 manufacturers. Technical sections cover low-power transistors, silicon field-effect-transistors (FETs) and high-power transistors. Special Types include switching transistors, darlington transistors (since 1975) and other miscellaneous transistors. Published annually.

Special Publications

Application Notes Reference – Covers 4,500 application notes available from 135 manufacturers. Technical sections cover analog circuits, digital circuits, general discrete device notes, general IC notes and microcomputer/microprocessor notes. D.A.T.A.BOOKS postage-free User Request Cards included for requesting free application notes. Published semiannually.

Microcomputer Systems – Covers 4,600 types from 157 manufacturers. Technical sections cover CPU boards, memory boards, controller boards, data transfer boards plus many other microcomputer sub-system boards and support enclosures. A supplementary section includes descriptions and specifications of the major bus structures. Published semiannually.

Engineering Application Software – (formerly Microprocessor Technical Software) Details over 3,400 application packages from more than 200 vendors. Applications such as network analysis, digital simulation, programmable logic array configuration, CAD/CAE and quality assurance calculations are represented. Includes the most current and complete information on microprocessor technical software and application programs – from assemblers and debuggers to filter design, waveform analysis and project management. Vendor Directory also included. Published annually.

Microwave – Covers 27,200 semiconductors and tubes from 111 manufacturers. Technical sections include crossed-field amplifiers, klystron tubes; duplexer tubes; microwave mixer diodes; PIN diodes; microwave video detector diodes; voltage variable capacitors & varactor diodes; tunnel diodes; miscellaneous microwave diodes; UHF/microwave transistors and many other microwave devices. Published annually.

D.A.T.A. INC. a Cordura Company
9889 Willow Creek Road P.O. Box 26875 San Diego, CA 92126-0875 USA
D.A.T.A. INTERNATIONAL INC.
Orpin House, Hilders Lane • Edenbridge TN8 6JX, Kent, England

Send Order Card or Call, TOLL-FREE:
1-800-854-7030
(In CA 1-800-421-0159)
In Canada (416) 238-0366 TELEX: 910-530606
Outside U.S. and Canada: Telex (England) 95671

educes Device Search Time

Microwave Discontinued Devices – Lists 18,800 devices (1959 to 1986) from 147 manufacturers. Tubes technical sections cover source, amplifier, output and duplexer tubes. Semiconductors technical sections cover microwave mixer, microwave video detector, varactor, tunnel and miscellaneous microwave diodes. A supplementary section includes lead code configuration tables. Published annually.

Military Electronic Devices Guide – Microcircuits and Semiconductors – Cross-references 9,200 MIL-M-38510 microcircuits, and MIL-S-19500 semiconductors. Comprises device information from DESC, plus QPLs, MCRL and other sources. Alternately cross-indexes Government Designation, Generic/Industry and National Stock Number (NSN). Lists 9,900 independently compiled 833 Microcircuits. Product selection section groups devices by function and covers adders, ALUs, amplifiers, buffers, controllers, comparators, counters, decoders, flip-flops, gates, inverters, isolators, memories, op-amps, oscillators, RAMs, regulators, ROMs, translators, UARTs, diodes, optocouplers, thyristors, transistors and much more. Includes FSCM numeric cross-reference DESC drawing part number section and cross-index and outline drawings. Published quarterly concurrent with new QPLs.

Optoelectronics – Lists 17,000 devices and assemblies from 110 manufacturers. Technical sections cover emitters (including laser types and arrays), sensors, photocouplers (opto-isolators), fiber optic devices, optoelectronic controllers, displays (including LEDs, LCDs, incandescent and fluorescent) plus many other optoelectronic devices. A supplementary section includes Lead Code Identifications. Published annually.

Optoelectronics Discontinued Devices – Features 11,500 devices (1974 to 1986) from 117 manufacturers. Technical sections cover emitters (including laser types and arrays), sensors, photocouplers (opto-isolators), displays and other optoelectronic devices. Published annually.

Plastics – Thermoplastics and Thermosets – Displays and ranks available properties on 9,000 processable thermoplastics and thermosets from 200 U.S. and Canadian manufacturers, comprising 70 generic types of plastics. Includes FDA Regulation Codes. Section of Principal Properties displays mechanical, thermal and electrical properties. Separate sections cover Ranked Properties of Plastics. Survey of Generic Types, Property Range of Generic Materials, Chemical and Environmental Resistance, Machinability Characteristics and Description of ASTM Tests. Includes Flammability Tables, Filled and Reinforced Plastics Index, Generic Type Cross-Index, Manufacturer/Supplier Cross-Index and Commercial Name Cross-Index. Published biennially.

Power Supplies – Cross-references 32,000 types from 81 manufacturers. Technical sections include Linear Power Supplies, Switching Power Supplies and DC/DC Converters. A supplementary section includes outline drawings with dimensions for each supply. Published annually.

New Publications

Adhesives – Completely revised since the 1980 edition, this new publication tabulates the important physical and chemical properties of over 3,000 commercially available adhesives, sealants, films and primers from hundreds of manufacturers. Included are cross-indexed data on 12 classes of adhesives (anaerobic, contact, cyanoacrylate, one part, two part, etc.) comprising more than 50 chemical bases (epoxy, chloroprene, phenolic, etc.) A special "Paired Substrate Index" includes adhesives data on more than 240 substrate combinations (plastic/plastic, fiberglass/metal, glass/glass, etc). Published biennially.

PC Board Connectors – Compares connector characteristics and specifications from over 100 manufacturers. Covers connectors used to connect one PC board to another PC board, a PC board to stranded or solid wire and a PC board to a cable. These applications include edge connectors, two-piece connectors including DIN types, headers, zero insertion force (ZIN) connectors and insulation displacement connectors (IDC). There are 15 characteristics listed for each connector, including part number series, manufacturer, style, grid spacing, number of contacts, mounting style, maximum current and voltage, contact resistance and more. Also included are outline drawings with dimensions for each connector and a manufacturers profile index. Published semiannually.

30-DAY GUARANTEE

Try one or more D.A.T.A.BOOKS for 30 days. See for yourself how useful and time-saving your D.A.T.A.BOOKS can be! At the end of 30 days, make up your own mind. We guarantee you'll agree that D.A.T.A.BOOKS are worth the investment or you may return them for full credit or refund.

YES: Send me 30-day trial copies of the D.A.T.A.BOOKS I've indicated. (Please Print)

Phone Order Desk
1-800-854-7030
In California **1-800-421-0159**
In Ontario Call **(416) 238-0366**
In British Columbia Call **(604) 271-3149**
In Quebec Call **(514) 697-3385**
Telex 910530606
See Rep listing for other countries

Name _____
Title _____
Company _____
Address _____
City _____ State _____ Zip _____
Signature _____
(required for credit card orders & orders without purchase order)
P.O. No. _____
Telephone ( ) _____ Date _____

☐ Payment enclosed. ☐ Bill my company. Full refund privilege.
☐ **Send information on D.A.T.A.TAPES License**

D.A.T.A.BOOKS Order Form

Subscription Title	Qty.	U.S.$	Can.$	Total
Alternate Source/Replacement Guides				
Direct and Suggested Replacement Guide – Integrated Circuits (2 editions)	____	$105.	$145.	____
Generic/Alternate Source Guide – Integrated Circuits (2 editions)	____	105.	145.	____
SPECIAL OFFER. Purchase both Direct and Suggested Replacement Guide and Generic/Alternate Source Guide for ICs	____	$170.	$240.	____
Direct Replacement Guide – Discrete Semiconductors (2 editions)	____	$105.	$145.	____
Suggested Replacement/Alternate Source Guide – Discrete Semiconductors (2 editions)	____	105.	145.	____
SPECIAL OFFER. Purchase both Direct Replacement and Suggested Replacement/Alternate Source Guide for Discrete Semiconductors	____	$170.	$240.	____
IC Functional Equivalence Guide (2 editions)	____	$115.	$160.	____
International Directory of ICs and Discrete Semiconductors (formerly Master Type Locator) (2 eds)	____	75.	105.	____
International Directory of Disc. ICs and Discrete Semiconductors (formerly Disc. Type Locator) (2 eds)	____	75.	105.	____
Integrated Circuits				
Audio/Video ICs (1 edition)	____	$ 95.	$135.	____
Digital ICs (2 editions)	____	105.	145.	____
Digital & Audio/Video Discontinued Devices (1 ed)	____	65.	90.	____
Interface ICs (2 editions)	____	105.	145.	____
Interface & Memory Discontinued Devices (1 ed)	____	65.	90.	____
Linear ICs (2 editions)	____	105.	145.	____
Linear Discontinued Devices (1 edition)	____	65.	90.	____
Memory ICs (2 editions)	____	105.	145.	____
Microprocessor ICs (2 editions)	____	105.	145.	____
Modules/Hybrids (1 edition)	____	95.	135.	____
Discrete Semiconductors				
Diode (1 edition)	____	$ 95.	$135.	____
Diode Discontinued Devices (1 edition)	____	65.	90.	____
Power Semiconductor (1 edition)	____	100.	140.	____
Thyristor (1 edition)	____	95.	135.	____
Thyristor Discontinued Devices (1 edition)	____	65.	90.	____
Transistor (1 edition)	____	95.	135.	____
Transistor Discontinued Devices (1 edition)	____	65.	90.	____
Special Publications				
Adhesives (1 edition) available Oct. '86	____	$125*	$175*	____
Application Notes Reference (2 editions)	____	60.	85.	____
Engineering Application Software (1 edition)	____	125.	175.	____
Microcomputer Systems (2 editions)	____	105.	145.	____
Microwave (1 edition)	____	95.	135.	____
Microwave Discontinued Devices (1 edition)	____	65.	90.	____
Military Electronic Devices Guide (4 editions)	____	195.	275.	____
Optoelectronics (1 edition)	____	95.	135.	____
Optoelectronics Discontinued Devices (1 edition)	____	65.	90.	____
PC Board Connectors (2 eds) available Oct. '86	____	115.**	160.**	____
Plastics – Thermoplastics and Thermosets (1 ed)	____	175.	245.	____
Power Supplies (1 edition)	____	95.	135.	____
			Subtotal $	
			California Customers: Add State and Local Sales Tax $	
			Grand Total $	

Prices subject to change without notice and are good in the U.S. and Canada only. For other countries see Representatives' listing in this book.

*Introductory price expires 10/31/86. Regular price $150 U.S. dollars, $210 Canadian dollars for Adhesives.

**Introductory price expires 10/31/86. Regular price $140 U.S. dollars, $195 Canadian dollars for Connectors.

B76

NO POSTAGE
NECESSARY
IF MAILED
IN THE
UNITED STATES

BUSINESS REPLY MAIL

FIRST CLASS PERMIT NO. 11108 SAN DIEGO, CA

POSTAGE WILL BE PAID BY

D.A.T.A. INC.
A Cordura Company

M/S B76
9889 Willow Creek Road
P.O. Box 26875
San Diego, CA 92126