Digital Link

Digital Link Corporation

DL3800

DS1 INVERSE MULTIPLEXER

USERS MANUAL

© Copyright, 1994 Digital Link Corp., 098-10380-01 Rev B
Digital Link Corporation •217 Humboldt Court •Sunnyvale, Calif 94089•Phone (408) 745-6200•FAX (408) 745-6250

Copyright © 1994, Digital Link Corporation

World copyright reserved. No part of this publication may be stored in a retrieval system, transmitted, or reproduced in any way, including but not limited to photocopy, photograph, magnetic, chemical, or other record, without the prior agreement and written permission of Digital Link Corporation.

DIGITAL LINK CORPORATION
217 Humboldt Court
Sunnyvale, California 94089
(408) 745-6200

PRODUCT LIMITED WARRANTY

Seller warrants to Buyer that any unit shipped to Buyer, under normal and proper use, will be free from defects in material and workmanship for a period of 24 months from the date of shipment to buyer. This warranty will not apply to any unit repaired by anyone other than the Seller or its authorized agent.

THE FOREGOING WARRANTY IS EXCLUSIVE AND IN LIEU OF ALL OTHER WARRANTIES, EXPRESSED OR IMPLIED, INCLUDING, BUT NOT LIMITED TO, ANY IMPLIED WARRANTIES OF MERCHANTABILITY OR FITNESS FOR A PARTICULAR PURPOSE.

Remedies and Limitations of Liability

(a) All claims for breach of the foregoing warranty shall be deemed waived unless notice of such claim is received by Seller during the applicable warranty period and unless the items to be defective are returned to Seller within thirty (30) days after such claim. Failure of Seller to receive written notice of any such claim irrespective of whether the facts giving rise to such a claim shall have then been discovered or whether processing, further manufacturing, other use or resale of such items shall have taken place.

(b) Buyer's exclusive remedy, and Seller's total liability, for any and all losses and damages arising out of any cause whatsoever, (whether such cause is based in contract negligence, strict liability, other tort or otherwise) shall in no event exceed the repair price of the unit from which such cause arises. In no event shall Seller be liable for incidental, indirect, special or consequential damages resulting from any such cause event if seller is aware of the possibility of such damages. Seller may, at its sole option, either repair or replace defective goods or work, and shall have no further obligation to Buyer. Return of the defective items to Seller shall be at Buyer's risk and expense.

(c) Seller shall not be liable for failure to perform its obligations if such results directly or indirectly from, or is contributed to by, any act of God or of Buyer; riot; fire; explosion; accident; flood; sabotage; epidemics; delays in transportation; lack of or inability to obtain raw materials, components, labor, fuel or supplies; governmental laws, regulations or orders; or labor trouble, strike, or lockout (whether or not such labor event is within the reasonable control of Seller); other circumstances beyond Seller's reasonable control, whether similar or dissimilar to any of the foregoing.

DIGITAL LINK CORPORATION
217 HUMBOLDT COURT
SUNNYVALE, CALIFORNIA 94089
(408) 745-6200

DOCUMENT CHANGE RECORD

Date	Issue Rev.	Description	Pages Affected
July 1994	A	Initial Release	All
July 1994	B	Add Suppress Yellow Misc. Changes	25-27 All

DISCLAIMER

Digital Link Corporation makes no representation of warranties with respect to the contents of this document and specifically disclaims any implied warranties of merchantability or fitness for any particular purpose. Further, Digital Link Corporation reserves the right to revise this publication and to make changes in it from time to time without obligation to notify any person or organization of such revision or changes.

CAUTION

To prevent damage to the circuitry of the DL3800:

When handling the DL3800 modules for any reason, measures must be taken to prevent damage caused by Electro-Static Discharge (ESD). In these instances, wear a properly grounded grounding strap or equivalent ESD dissipation apparatus.

TABLE OF CONTENTS

1 INTRODUCTION 1
2 GENERAL SYSTEM DESCRIPTION 2
2.1 SYSTEM OVERVIEW 2
2.2 FUNCTIONAL DESCRIPTION 3
2.3 SYSTEM FEATURES 5
2.4 SYSTEM BENEFITS 7
2.5 SYSTEM SPECIFICATIONS 7
3 APPLICATIONS 8
3.1 APPLICATION OVERVIEW 8
4 ASCII TERMINAL INTERFACE 9
4.1 LOG IN/LOG OFF 9
4.2 TERMINAL OPERATION OVERVIEW 10
4.2.1 GENERAL MENU FLOW 10
4.2.2 SCREEN DESCRIPTION 10
4.3 INVERSE MULTIPLEXER MAIN MENU COMMANDS 12
4.3.1 SELECT LOCAL/REMOTE 12
4.3.2 ALARMS & STATUS 13
4.3.3 STATISTICS 15
4.3.4 EVENT HISTORY 18
4.3.5 CONFIGURATION 20
4.3.5.1 UNIT CONFIGURATION 20
4.3.5.2 DTE CONFIGURATION 23
4.3.5.3 NETWORK CONFIGURATION 25
4.3.5.4 NETWORK THRESHOLDS 29
4.3.5.5 SAVE CONFIGURATION 30
4.3.6 SYSTEM UTILITIES 30
4.3.6.1 SOFTWARE DOWNLOAD 31
4.3.6.2 DELETE ENTIRE NODE CONFIGURATON 33
4.3.6.3 LOGIN CONFIGURATION 33
4.3.6.4 SNMP CONFIGURATION 35
4.3.6.5 SAVE CONFIGURATION 38
4.3.7 TESTS 38
4.3.8 MANUAL NETWORK RESTORATION 40
4.3.9 LOGOUT 41
5 FRONT PANEL 42
5.1 GENERAL 42
5.1.1 DISPLAY OVERVIEW 42
5.1.2 BUTTON OVERVIEW 42
5.1.3 FRONT PANEL LEDS 43
5.1.4 ACCESS LEVELS AND PROTECTED MODE 45
5.1.5 POWER UP AND RESET 45
5.2 TOP MENU 46
5.2.1 SELECT REMOTE/SELECT LOCAL 47

5.3 DISPLAY MENU....47
5.3.1 NODE STATUS....48
5.3.2 DTE STATUS....48
5.3.3 NET (1-8) STATUS....49
4.3.4 NET (1-8) STATISTICS....49
5.4 TEST....51
5.4.1 DTE (1-8) TESTS....53
5.4.1.1 DTE/NET LOOPBACK....53
5.4.2 NETWORK TESTS....54
5.4.2.1 PAYLOAD LOOPBACK....54
5.4.2.2 LINE LOOPBACK....54
5.4.2.3 LOCAL LOOPBACK....55
5.5 CONFIGURATION MENU....56
5.5.1 NODE CONFIGURATION....57
5.5.2 DTE CONFIGURATION MENU....60
5.5.3 NETWORK CONFIGURATION MENU....61
5.5.4 NET *N* CONFIGURATION....62
5.5.5 NETWORK THRESHOLDS....64
6 INSTALLATION....66
6.1 INSTALLATION PROCEDURE....66
6.2 MOUNTING THE DL3800....67
6.2.1 RACK MOUNTING....67
6.2.2 DESK OPERATION AND STACKING....68
6.3 CABLING AND CONNECTORS....68
6.3.1 POWER CABLES AND CONNECTIONS....68
6.3.1.1 AC Power Connection....68
6.3.1.2 DC Power Connection....68
6.3.2 T1 NETWORK CABLE & CONNECTIONS....69
6.3.3 DTE CABLE & CONNECTIONS....69
6.3.4 ASCII TERMINAL AND DLMS CONNECTION....69
7 MAINTENANCE AND USER DIAGNOSTICS....71
7.1 EQUIPMENT RETURN & REPAIR....71
7.2 GENERAL....71
7.3 TROUBLESHOOTING SUGGESTIONS....72
7.4 TEST PROCEDURES....72
7.5 DL3800 LOOPBACK PROCEDURES....73
8 APPENDIX....74
8.1 CONNECTOR PIN ASSIGNMENTS....74
8.1.1 COMM PORT PIN ASSIGNMENTS....74
8.1.2 HSSI DTE CONNECTOR PIN ASSIGNMENTS....74
8.1.3 DB25 TO V.35 DTE CONNECTOR PIN ASSIGNENTS....75
8.1.4 DB25 TO RS449 CONNECTOR DTE PIN ASSIGNMENTS....76
8.1.5 T1 NETWORK PIN ASSIGNMENTS....77
8.1.6 DB25 TO DB9 ADAPTER PINOUTS....77
8.1.7 EXTERNAL CLOCK PIN ASSIGNMENTS....77
8.2 DTE CLOCK RATES....78
8.3 FACTORY DEFAULT SETTINGS....78

1 INTRODUCTION

The DL3800 DS1 Inverse Multiplexer Users Manual is divided into 8 sections. A brief description of each section is provided below to assist users of the DL3800 with the use of this manual.

Section 1.0, INTRODUCTION, provides an introduction to the manual and a brief summary of each of the remaining 7 sections.

Section 2.0, GENERAL SYSTEM DESCRIPTION, describes the DL3800 system architecture, including signal flow, main circuit functions and system configurations, as well as the user interface. This section also provides the DL3800 features and benefits as well as specifications.

Section 3.0, APPLICATIONS, describes the major application that the DL3800 supports.

Section 4.0. ASCII INTERFACE, describes how the DL3800 is controlled from an ASCII terminal. This section includes a detailed description of the ASCII terminal menu operation to configure, monitor status and alarm conditions, run tests and diagnostics, and generally operate the DL3800

Section 5.0, FRONT PANEL OPERATION, provides a summary of the various controls and indicators available on the front panel of the DL3800.

Section 6.0, INSTALLATION, describes the procedures for physically installing the DL3800 DS1 Inverse Multiplexer. This section also describes the proper cable connections required for system operation and the "turn-up" procedure for the DL3800.

Section 7.0, MAINTENANCE AND USER DIAGNOSTICS, describes how to perform various tests provided by the DL3800. It also describes how these tests and other DL3800 diagnostics tools can be utilized to troubleshoot and isolate network and system problems. The return and repair procedure for the DL3800 DS1 Inverse Multiplexer is also described in this section.

Section 8.0, APPENDIX, provides connector pin assignments and factory default settings.

2 GENERAL SYSTEM DESCRIPTION

2.1 SYSTEM OVERVIEW

The DL3800 DS1 Inverse Multiplexer bridges the gap between T1 and T3 data services by providing T1 multiplexing multimegabit (up to 12.224 Mbit/s) DTE data onto two, four, six or eight T1 circuits The DL3800 Inverse Multiplexer is an economical solution to bandwidth intensive applications as it provides multimegabit data transport without the need for T3 circuits. The DL3800 is an ideal solution for applications such as LAN-to-LAN internetworking, bulk data transfer, video teleconferencing and disaster recovery.

The inverse multiplexing technique employed by the DL3800 is completely transparent to the DTE application, as the multiple T1 circuits act as a single high-speed data link. The DL3800 can accept up to a 31ms differential delay between individual T1 circuits, thus providing the capability to accommodate T1 circuits from divergent paths. This is often the case with circuits being utilized from different carriers.

The DL3800 supports either High Speed Serial Interface (HSSI) or V.35/RS449 interfaces to the DTE. Extended Superframe (ESF) or D4 framing is supported, as well as AMI or B8ZS line coding. It is compliant with both AT&T Publication 54016 and ANSI T1.403 Facility Data Link requirements. For maximum application versatility, the DL3800 is available for both DSX-1 or Channel Service Unit (CSU) operation.

The DL3800 features an automatic rate fallback in the event of a failing T1 circuit. If the performance of a T1 circuit is detected to be falling below accepted levels, the DL3800 automatically removes the T1 from service and throttles back the DTE to a data rate corresponding to the remaining T1s. When the alarm condition on the affected T1 has been cleared, the DL3800 can automatically restore the T1 and data rate.

The user can configure, control and monitor the DL3800 through the front panel, an ASCII terminal (locally or remotely via a modem or remotely in-band) or a Simple Network Management Protocol (SNMP) management station. The remote DL3800 can be managed in-band using all active DS1 connections as the communications path. The DL3800 features an integrated SNMP agent which supports the DS1 Management Information Base (MIB) in addition to a unit specific enterprise MIB.

A downloadable software feature of the DL3800 allows new features and functionality to be added to the unit on line via the unit's built-in communications port or via a selected DS1 connection.

2.2 DL3800 FUNCTIONAL DESCRIPTION

The base DL3800 configuration consists of a motherboard with two (T1) network interface connectors and the DTE connectors (HSSI and V.35/RS449). Six additional T1 network ports can be added with the addition of from one to three daughterboards, each daughterboard supporting two additional T1 ports.

The general operation of the DL3800 is explained in the following paragraphs which describe the signal flow and overhead functions.

Signal Flow:

The DL3800 is configured by the user for the number of T1 signals to be used for transmission. The DL3800 will provide a smooth clock to the DTE at the data rate required for the number of T1 outputs the user has configured. For T1, this rate will be Nx1.528 for B8ZS encoding and Nx1336 for AMI, where N is the number of T1s to be used (from 1 to 8).

The transmit smooth clock PLL can use any of the incoming T1 clocks, and external clock or internal clock as reference. The receive smooth clock will use one of the receive clocks at its source. The smooth clock VCO will be divided down to 8khz to be phase compared to the 8khz reference. The receive buffers are large enough to accommodate variations between T1 receive clocks.

The DL3800 supports one DTE interface. For data rates up to 10Mbps, the DTE interface can be V.35/RS449 or HSSI (software selectable). For data rates over 10Mbps, only the HSSI interface will be supported.

Data is sent from the DTE interface to an Inverse Multiplexer (IMUX) transmit framer. A 16-bit proprietary framing pattern is defined to satisfy the requirements of inverse multiplexing communications. This frame is constructed by using one payload bit in each frame for 16 consecutive frames. For T1, the inverse multiplexing frame is the first bit after the framing bit.

From the inverse mux framer, the data is sent to all T1 framers, where the T1 framing is added, and then to the appropriate T1 network interface and out over the T1 network.

All incoming configured T1 lines, with their respective clocks, are received into a standard T1 framer. The output of the T1 framer is fed into the IMUX framer.

Data coming into the DL3800 DS1 Inverse Multiplexer is stored in *N* independent buffers, where *N* is the number of configured input channels. From these buffers, the data will be read and IMUX framing removed.

When the incoming signal is framed on the inverse mux frame, the framer will start loading its Dual Port RAM. The address to the Dual Port RAM is derived from the 16-bit inverse mux frame. The software will ask all framers to latch their Dual Port RAM addresses at the same time, and by looking at the addresses, the software can determine which network has experienced the greatest delay.

From the receive inverse mux framer, the incoming data will go to the receive multiplexer. The net that is last in time will be enabled to tell the receive multiplexer when to start unloading the Dual Port RAM to the DTE interface. To allow for jitter and wander specifications, the read address counter will be positioned approximately three frames behind the write address for the network last in time.

Figure 2.2 is a Functional Diagram of the DL3800 showing a unit supporting four T1 lines.

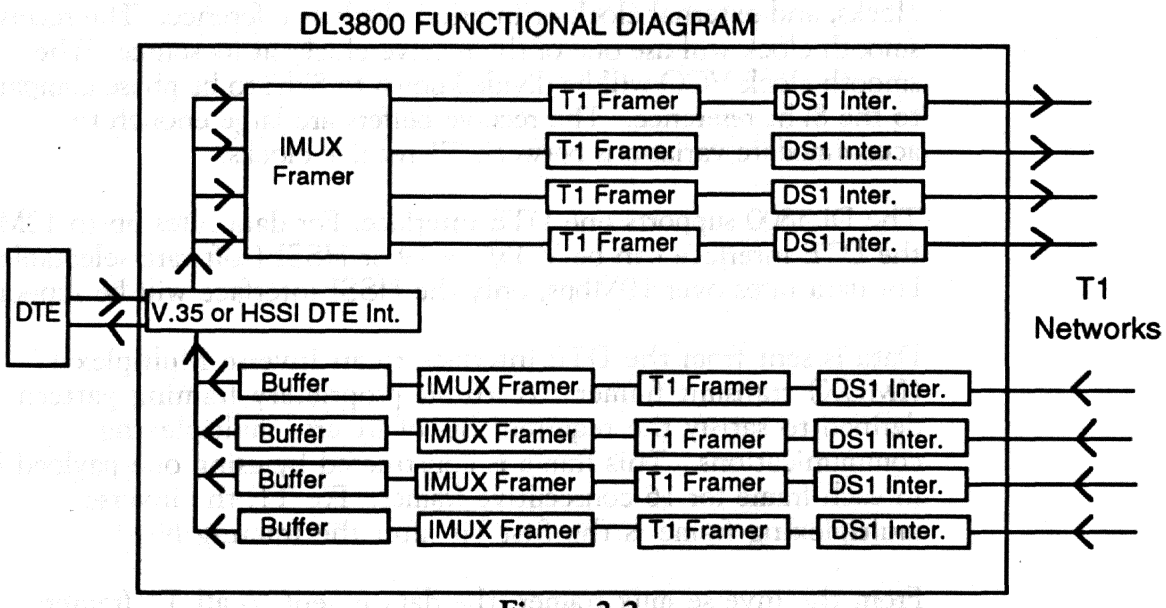

Figure 2.2

Overhead Functions:

The overhead functions consist of a controller, front panel, two RS232 communication interfaces (terminal and network management) and a power supply.

The controller function is performed by a microprocessor on the main board. The controller collects T1 statistics. It also processes T1 alarms and performance monitoring information as well as supporting unit configuration, test and maintenance activities. Finally the "Controller" block supports the front panel display, terminal port and SNMP port interfaces.

The front panel consists of a 16 character vacuum fluorescent display, 4-key keypad and LEDs. This panel can be used to provision the unit, run diagnostic tests, or gain access to performance statistics.

The serial ports are RS-232C compatible ports with one port supporting a menu driven ASCII terminal interface and the other port providing access to the built-in SNMP agent functionality.

The built-in power supply has a range of 90V to 244V AC and -40V to -70V DC.

2.3 DL3800 SYSTEM FEATURES

- Advanced management capabilities

  The DL3800 supports a built-in SNMP agent for ease of enterprise wide network management. Also supported is a console port with a user-friendly menu driven interface for local access or remote modem access. Console ports of co-located DL3800s can be daisy-chained together, with no additional hardware required, for single console or modem support of multiple units. In addition the DL3800 provides a front panel display for local access when a console is not available.

- Complete diagnostic and maintenance capabilities

  The DL3800 provides detailed statistics on all DTE T1 performance parameters as well as internal system integrity checks. The DL3800 also provides T1 and DTE loopback capabilities for ease of maintenance. Numerous alarm conditions are reported including user selectable alarm thresholds for T1 line parameters. The DL3800 also provides alarm relay contacts for both alarm indication and alarm input. For example, the alarm input allows the user to connect any alarm (fire, burglar, etc.) to the DL3800 which will forward the alarm to the management center.

- Downline loadable software option

  The DL3800 has the ability for on-line download of new product features and functions.

2.4 DL3800 SYSTEM BENEFITS

The numerous features of the DL3800 provide many benefits to the user.

- Reliable, full performance access to T1 networks for the widest variety of DTE products
- Enterprise wide visibility via SNMP
- Local and remote access via front panel or terminal
- Complete maintenance and diagnostic support via exhaustive alarm, statistic and test capabilities
- Downloadable code provides for on-line upgrade to the DL3800 software for both major and minor feature enhancements

2.5 DL3800 SPECIFICATIONS

- T1 NETWORK INTERFACE

* Interface Type	DSX-1 Standard T1 CSU Optional
* Number of Ports	2, 4, 6 or 8
* Framing Formats	D4 or ESF
* ESF FDL Protocols	AT&T 54016 ANSI T1.403
* Line Code	AMI or B8ZS
* Transmit Line Rate	1.544 Mbit/s +/- 50 ppm
* Receive Line Rate	1.544 Mbit/s +/- 135 ppm
* Synchronization	Internal, Loop-timed, or External
* Network Connector	DB15 Female

- EXTERNAL CLOCK INTERFACE

* Rate	1.544 MHz +/- 50 ppm
* Connector Type	DB15

- DTE INTERFACE

* Electrical Interface	HSSI or V.35/RS449
* Rate	Up to 12.352 Mbit/s
* Connector Types	DB25 Female (V.35/RS449) 50-pin Female Amplimite (HSSI)
* Number of Ports	One

- COMMUNICATIONS (COMM) PORT (ASCII)
  - * Interface Devices: Terminal or Modem
  - * Protocol: User-friendly menu driven
  - * Electrical: RS-232 Female

- COMMUNICATIONS (COMM) PORT (SNMP)
  - * Interface Devices: SNMP Manager
  - * Protocol: SNMP (UDP/IP) over SLIP
  - * Electrical: RS-232 Female

- CONFIGURATION MEMORY: Non-volatile memory retains configuration after power outage

- FRONT PANEL
  - * Display: 16 Character Alphanumeric
  - * Key Pad: Four Keys
  - * DTE Status LEDs: TD, RD, RTS (TA), CTS (CA), HSSI, TEST, T1-T8

- DIAGNOSTICS
  - * Loopbacks: DTE/Network, Payload, Line, Local
  - * Self Test: Checks Unit Circuitry and Memory on power up
  - * Alarms: Relay, dry contact

- POWER
  - * AC Input: 120 VAC, O.5 Amps Max
220 VAC, 0.25 Amps Max
  - * DC Input (Optional): -40 VDC to -75 VDC
  - * Power Consumption: 40 Watts Maximum

- ENVIRONMENTAL
  - * Operating Temperature: 0° to 50° C
  - * Storage Temperature: -35° to 85° C
  - * Relative Humidity: 0 to 95% Non-Condensing
  - * Altitude: -200 to 10000 ft above sea level

- PHYSICAL/CONNECTORS
  - * Mounting: 19" or 23" rack mounting or Standalone
  - * Dimensions: 17.2" W x 2.8" H x 11" D

3 APPLICATIONS

3.1 APPLICATION OVERVIEW

The DL3800 DS1 Inverse Multiplexer is designed to transport up to 12 Mbit/s of data over T1 lines. The user can transport large amounts of data without having to move up to more expensive T3 transport, retaining the investment made in T1 technology and equipment.

In a typical application, shown in Figure 3.1, the DL3800 can transport up to 12 Mbit/s of data over eight T1 lines.

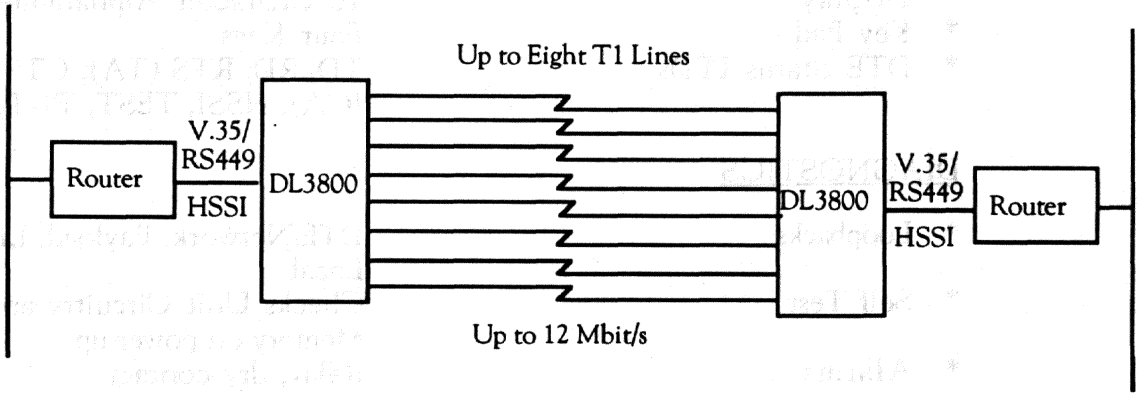

Figure 3.1

4. ASCII TERMINAL INTERFACE

4.1 LOG IN/LOG OFF

Each DL3800 is equipped with an integrated RS232 ASCII user interface that can be accessed through the "Terminal" port (DB-9 connector) located on the rear panel of the DL3800. Through this interface, the user can perform various functions described in this section.

When operating in MULTIDROP MODE (multiple DL3800s that are daisy-chained together for centralized network management), the user must "log in" to establish communication with a single unit on the network. Only one unit may be logged onto at a time. All units continuously monitor the line, but only the unit which is logged on will respond to terminal commands. When no unit is logged in, the characters typed on the terminal will not show up on the display screen.

To log on and log off a particular unit, follow these procedures:

a. Type CTRL X (hold control key down and strike the X key) followed by # (the number sign), the NODE NUMBER and ENTER (or RETURN). These characters will not be displayed on the terminal screen but the units will receive them nonetheless.

b Menu 1 of the Digital Link Terminal Interface will appear. If not, check that the Node Number matches what is typed on the terminal. If it still does not appear, check that the DL3800 port settings match the settings (baud rate, parity, data bits and stop bits) of the terminal. If so, a null modem adapter may be required to interchange pins 2 and 3 (transmit and receive) from the terminal.

c. To log on to another DL3800 on the same daisy chain, simply type CTRL X, followed by a # and the Node Number and strike ENTER (or RETURN). The previous unit is logged out and the new unit is logged on.

d. To log off all units without logging onto any new units, type CTRL X followed by ENTER or RETURN.

e. Typing five CTRL X commands in a row, followed by ENTER (or RETURN) will return a "roll call" of all Node Numbers on the communications network. This feature is useful when the Node Numbers of any units on the network are unknown.

4.2 TERMINAL OPERATION OVERVIEW

4.2.1 GENERAL MENU FLOW

The menu interface for the DL3800 consists of the INVERSE MULTIPLEXER MAIN MENU and a series of Sub Menus.

From the MAIN MENU, the Sub Menu to be selected or function to be performed is selected by moving the highlight bar through the menu screen with the CURSOR ARROW keys until the desired function is highlighted.

To prevent any accidental data and/or status change, every proposed change requires a confirmation response. To confirm a proposed change, move the highlight bar to "CONFIRM" on the menu and strike "ENTER." Type any other key and the change will not be made. This will cause the terminal to continue to prompt the user to confirm the change(s). To abort the change, move the highlight bar to "EXIT" and strike the ENTER key rather than confirming the change.

GENERAL TIPS: Striking the ESCAPE key brings the display back to SELECT LOCAL/REMOTE when in the MAIN MENUS and back to EXIT when in the EXECUTION MENUS.

4.2.2 SCREEN DESCRIPTION

The top four lines of each display screen contain information regarding the last two status or alarm conditions reported by the DL3800. This information includes: the severity of condition reported; the date and time it was reported; the Unit and NET (T1 port) reporting the alarm; a code for the type of condition, and a description of the condition.

The next two lines in the menu, which are always highlighted, represent the STATUS BAR. The first line of the Status Bar displays the product type , the software release number , node number, node name , date & time and current alarm status of the unit. The second line displays the selected device address and name.

INVERSE MULTIPLEXER MAIN MENU

```
Major          11/18/91  17:56:47        Unit:1      NET : 2      (33)
        Loss of Frame
Idled          11/18/91  17:56:58        Unit: 1     NET :2       (13)
        Loss of Frame Idled

DIGITAL LINK DL3800 SR XX  NODE 1:HOME  mm/dd/yy  hh:mm:ss  MN
SELECTED DEVICE ADDRESS:  1.00.000  NAME:HOME

    INVERSE MULTIPLEXER MAIN MENU
    Select Local/Remote
    Alarms & Status
    Statistics
    Event History
    Configuration
    System Utilities
    Tests
    Manual Network Restoration
    Logout
```

FIGURE 4.2.2

Figure 4.2.2 is an example of a INVERSE MULTIPLEXER MAIN MENU.

The product type is a **DL3800** Digital Inverse Multiplexer.

The software revision is **XX**. This number is useful to determine the features that are supported with this release.

The Node number, in this case **1**, is user defined. This can be used to further identify the node within the user's network. It is recommended that all nodes be given a unique node number. This is crucial in inter-node communications.

The Node name **(HOME)**, is user defined. The user can use this field to uniquely describe the node within the network.

The date and time are give in **month/date/year** and **hour/minute/second.**

The alarm indicator, in this case **MN** for minor, is given on each screen to alert the user of a local Node alarm.

The Selected Device address, in this example **1.00.000** is shown at the beginning of the second status line. A device is a generic term to indicate a NODE (unit) or DTE board.

The device Name is user defined. This can be used to describe the node or board's location or function within the network. In the examples in this manual, the name used is Home.

4.3 INVERSE MULTIPLEXER MAIN MENU COMMANDS

When a DL3800 is first powered up, the Inverse Multiplexer Main Menu (Figure 4.2.2) appears on the terminal screen. This describes those functions that can be performed, parameters viewed, changed and/or deleted from this menu. The Inverse Multiplexer Main Menu items are:

SELECT LOCAL/REMOTE; allows the user to move to the between the Main Menu of the Local and Remote units .

ALARMS AND STATUS; provides current alarm and status report of the common equipment, DTE and T1 lines.

STATISTICS; allows the user to access the statistics menus of the various T1 lines.

EVENT HISTORY; allows user to view and reset alarm and event history of the DL3800.

CONFIGURATION; allows the user access sub-menus to configure certain parameters of the DL3800, network and DTE.

SYSTEM UTILITIES; allows the user to perform various system utility functions such as download software, configure SNMP, configure login and delete or save configuration.

TESTS; allows the user to initiate diagnostic loopbacks.

MANUAL NETWORK RESTORATION; allows the user to manually restore a T1 circuit instead of it being restored automatically upon the clearing of a problem.

LOGOUT; allows the user to log out of the DL3800 without having to wait for automatic logout.

These items are described in more detail in the following sections.

4.3.1 SELECT LOCAL/REMOTE

When in the INVERSE MULTIPLEXER Main Menu, this option allows the user to view and access the other items on either the local or remote DL3800. The Device Address and Name in the header portion of the display screen will identify the unit that the terminal is presently communicating with.

To move to the Main Menu of the other DL3800, highlight SELECT LOCAL/REMOTE and hit ENTER. The Device Address and Name in the header should change to the new unit.

4.3.2 ALARMS AND STATUS

The ALARMS AND STATUS menu is a "view only" screen that allows the user to review the current ALARMS AND STATUS items being reported by the DL3800. To access this screen, move the highlight bar in the Inverse Multiplexer Main Menu to ALARMS AND STATUS and strike ENTER.

The ALARMS AND STATUS display (Figure 4.3.2) will appear on the screen describing the status of the common equipment and each of the T1 ports (lines) plus the status of the DTE leads and the current rate of the DTE port.

ALARMS & STATUS MENU

```
Major          11/18/91  17:56:47      Unit:1      NET : 2     (33)
        Loss of Frame
Idled          11/18/91  17:56:58      Unit: 1     NET :2      (13)
        Loss of Frame Idled

DIGITAL LINK DL3800  SR XX  NODE 1:HOME  mm/dd/yy hh:mm:ss MN
SELECTED DEVICE ADDRESS:  1.00.000  NAME:HOME

   CURRENT ALARM AND STATUS ITEMS    Exit  Repeat

   Common Equipment Status:  OK
   Network Ports:
         PORT 1:    LOS, RED, UAS 15 MIN MJ
         PORT 2:    LOS, RED, UAS 15 MIN MJ
         PORT 3:    Not Present
         PORT 4:    Not Present
         PORT 5:    Not Present
         PORT 6:    Not Present
         PORT 7:    Not Present
         PORT 8:    Not Present

   V.35 port:    RTS ON, DSR ON, CTS ON, RLSD ON
   Current V.35 port rate  = 3.056 Mbit/s/sec
```

Figure 4.3.2

Following are the Alarm and Status items (severity) that may appear. The Common Equipment alarms and status will appear first, followed by the Network and the DTE alarms and status.

NETWORK	COMMON EQUIP.	DTE
Not Present	External Alarm	HSSI Channel Lpbk
LOS	Proc Restart	User Lpbk
LOF	RAM Test Fail	V.35 LT Lpbk
AIS det	ROM Checksum Fail	DTE Loss
AIS	No Ext Clk	DTR On
RED	Primary Clk	RTS On
YEL det	Secondary Clk	RLB On
YEL	Internal Clk	LT On
Failed Signal	Sync-Net 1	TA On
Xmt Failed	Sync-Net 2	LA On
User Line Lpbk	Sync-Net 3	LB On
User Payload Lpbk	Sync-Net 4	DSR On
HW Line Lpbk	Sync-Net 5	CTS On
HW Payload Lpbk	Sync-Net 6	RLSD On
* Active	Sync-Net 7	TM On
Excessive Delay	Sync-Net 7	CA On
Set Code Detected	Sync-Net 8	LC On
Reset Code Detected	No Net Sync	
CRC Threshold		
SES Threshold		
UAS Threshold		
BPV MN/MJ		
OOF MN/MJ		
BPV 15 Min MN/MJ		
CRCs 15 Min MN/MJ		
ES 15 Min MN/MJ		
SES 15 Min MN/MJ		
UAS 15 Min MN/MJ		
BPVs 24 Hr MN/MJ		
CRCs 24 Hr MN.MJ		
ES 24 Hr MN/MJ		
SES 24 Hr MN/MJ		
UAS 24 Hr MN/MJ		

* **Note:** If the DL3800 is in Inverse Mux mode and receiving I-Framing on the T1 without Blue, Yellow or Red Alarms or Major Alarm Thresholds being exceeded, the Alarm & Status display will read ACTIVE.

In Single DSU Mode, the DL3800 is ACTIVE if it is receiving valid T1 pulses from the network without Blue, Yellow or Red Alarms or Major Alarm Thresholds being exceeded and 1) if in HSSI mode the TA must be asserted or 2) if in non-HSSI mode the user must select DTR or RTS.

A Blue, Yellow or Red Alarm or the exceeding of Major Alarm Thresholds will cause the T1 to be taken out of service.

4.3.3 STATISTICS

This menu item allows the user to access the performance STATISTICS sub-menu of any T1 port. Highlight STATISTICS in the Inverse Mux Main Menu and strike the ENTER key. The STATISTICS Menu (Figure 4.3.3a) will appear on the screen.

STATISTICS

```
Major          11/18/91  17:56:47        Unit:1      NET : 2      (33)
        Loss of Frame
Idled          11/18/91  17:56:58        Unit: 1     NET :2       (13)
        Loss of Frame Idled

DIGITAL LINK DL3800 SR XX  NODE 1:HOME  mm/dd/yy hh:mm:ss MN
SELECTED DEVICE ADDRESS:  1.00.000  NAME:HOME

   STATISTICS MENU        Exit

   NETWORK 1 STATISTICS
   NETWORK 2 STATISTICS
   NETWORK 3 STATISTICS
   NETWORK 4 STATISTICS
   NETWORK 5 STATISTICS
   NETWORK 6 STATISTICS
   NETWORK 7 STATISTICS
   NETWORK 8 STATISTICS
```

Figure 4.3.3a

To view the performance statistics of any one T1 port, highlight that port and strike ENTER. The NET STATISTICS for that port (Figure 4.3.3b) will appear on the screen.

The NET STATISTICS display presents the current and network performance statistics for the CURRENT 15-minute interval, for the past 24 hours (CUMULATIVE 1) and the 24 hours preceding that interval (CUMULATIVE 2), in 15-minute increments. It also allows the user to Clear the display and reset the counters. If the counters were reset within the past 24 hours, CUMULATIVE 2 will not display any errors.

STATISTICS MENU (SCREEN #1)

```
Major          11/18/91  17:56:47      Unit:1      NET : 2      (33)
          Loss of Frame
Idled          11/18/91  17:56:58      Unit: 1     NET :2       (13)
          Loss of Frame Idled

DIGITAL LINK DL3800 SR XX  NODE 1:HOME  mm/dd/yy hh:mm:ss MN
SELECTED DEVICE ADDRESS: 1.00.000  NAME:HOME

 NET STATISTICS - PORT 1     Exit  Next   Repeat  Clear     Page 1
CURRENT SECONDS:177  PAST INTERVALS:39  ERROR FREE SECONDS:100%

                CV   ES   ES-A  ES-B  SES  SAS  AISS  UAS
CURRENT         0    0    0     0     0    0    0     0
CUMULATIVE 1    0    0    0     0     0    0    0     0
CUMULATIVE 2    0    0    0     0     0    0    0     0

15:03 - 15:18   0    0    0     0     0    0    0     0
14:48 - 15:03   0    0    0     0     0    0    0     0
14:33 - 14:48   0    0    0     0     0    0    0     0
14:18 - 14:33   0    0    0     0     0    0    0     0
```

FIGURE 4.3.3b

To view additional pages with this set of performance data, press the CURSOR down arrow, or to view the previous page, the CURSOR up arrow.

Additional NET STATISTICS are presented in a second screen (Figures 4.3.3c). To view additional pages with this set of performance data, press the CURSOR down arrow, or to view the previous page, the CURSOR up arrow.

STATISTICS MENU (SCREEN #2)

```
Major          11/18/91  17:56:47        Unit:1      NET : 2      (33)
          Loss of Frame
Idled          11/18/91  17:56:58        Unit: 1     NET :2       (13)
          Loss of Frame Idled

DIGITAL LINK DL3800  SR XX  NODE  1:HOME  mm/dd/yy  hh:mm:ss  MN
SELECTED DEVICE ADDRESS:  1.00.000  NAME:HOME

     NET STATISTICS - Port 1    Exit  Next  Repeat  Clear        Page 1
CURRENT SECONDS:177   PAST INTERVALS:39  ERROR FREE SECONDS:100%

                    CSS      OOF      BPV      FES
 CURRENT            0        0        0        0
CUMULATIVE 1        0        0        0        0
CUMULATIVE 2        0        0        0        0
15:03 - 15:18       0        0        0        0
14:48 - 15:03       0        0        0        0
14:33 - 14:48       0        0        0        0
14:18 - 14:33       0        0        0        0
```

FIGURE 4.3.3c

CV	A CODE VIOLATION (CV) is a count of Frame synchronization bit errors (FE) in the Super Frame (SF) format, or a count of the CRC-6 errors in the Extended Super Frame (ESF) format occurring during the accumulation period.
ES	An ERRORED SECOND (ES), in the case of ESF, is the count of one-second intervals containing one or more CRC-6 errors, or one or more CS events, or one or more SEF events. In the case of SF, this parameter is a count of one-second intervals containing one or more SEF events, or one or more CS events.
ES-A	In ESF format only, this is the count of one-second intervals with exactly one CRC-6, no SEF and no CS events.
ES-B	In ESF format only, this is a count of one-second intervals with no less that 2 and not more that 319 CRC-6 errors, no SEF events and no CS events.
SES	In ESF format, Severely Errored Seconds are defined as a count of one-second intervals with 320 or more CRC-6 errors, or an SEF defect. In SF, it is the count of one-second intervals with eight or more FE events or an SEF defect.

Table 4.3.3

SAS In ESF only, this parameter is the count of one-second intervals containing one or more SEF defects or one or more AIS (Alarm indication Signal) defects.

AISS This parameter is a count of one-second intervals containing one or more AIS defects.

UAS This is a count of one-second intervals in which the DS1 path has been unavailable. The DS1 path is determined to be unavailable from the onset of 10 contiguous SESs, or the onset of the condition leading to a failure.

CSS The Controlled Slip Second is a count of one-second intervals containing one or more controlled slips.

OOF This is the number of seconds that the signal has been out of frame during the accumulation period. This counter is suppressed during an LOS (loss of signal) condition. A total of 80 OOFs in a 10 second sliding window (approximately 10^{-3}) will create a Major Alarm and 5 OOFs in a 600 second sliding window (approximately 10^{-6}) will create a Minor Alarm.

BPV This display provides the number of Bipolar Violations (BPVs) that have occurred during the accumulation period. A total of 15430 BPVs in a 10 second sliding window (approximately 10^{-3}) will create a Major Alarm and 916 BPVs in a 600 second sliding window (approximately 10^{-6}) will create a Minor Alarm.

FES This display provides a count of the number of seconds containing FRAMING BITS that have been in error during the accumulation period.

TABLE 4.3.3

4.3.4 EVENT HISTORY

This screen allows the user to review and clear the alarm and status history of the DL3800.

To view the EVENT HISTORY, move the highlight bar to EVENT HISTORY in the Node Main Menu and strike the ENTER key. Use the UP and DOWN CURSOR keys to move ahead to the next page or back to the previous page of the Event History Menu.

All messages contain the following:

ALARM LEVEL:	
Major	Service affecting
Minor	Needs attention, but not yet service affecting
Idled	Alarm condition has expired
Status	Non-service-affecting event
DATE & TIME:	Date and Time of the occurrence or expiration of the alarm/state.
ADDRESS:	The address is the physical location.
DEVICE:	The device reporting the status and alarm condition (Unit #), and the type of device (NET, DTE or NODE).
EVENT CODE:	Number designation for type of alarm or status condition. This number will be useful when contacting the factory.
DESCRIPTION:	Describes the event.

To clear the report of all History Events, move the highlight bar to CLEAR HISTORY and strike the ENTER key. Figure 4.3.4 is an example of the EVENT HISTORY Menu.

EVENT HISTORY MENU

```
Major          11/18/91  17:56:47        Unit:1        NET : 2      (33)
        Loss of Frame
Idled          11/18/91  17:56:58        Unit: 1       NET :2       (13)
        Loss of Frame Idled

DIGITAL LINK DL3800  SR XX  NODE  1:HOME  mm/dd/yy  hh:mm:ss  MN
SELECTED DEVICE ADDRESS:  1.00.000  NAME:HOME

   EVENT HISTORY  Exit      Repeat     Clear History     Page 1

   Idled        11/18/91      09:02:10      Unit 1        NET 2        (29)
        Yellow Signal Detected Idled
   Major        11/18/91      09:02:06      Unit 1        NET 2        (30)
        Yellow Alarm
   Status       11/18/91      08:58:09      Unit 1        NET 2        (29)
        Yellow Signal Detected
   Idled        11/18/91      08:58:01      Unit 2        NET 3        (29)
        Yellow Signal Detected Idled
   Minor        11/18/91      08:56:24      Unit 1        Node         (36)
        ROM Checksum Failed
```

FIGURE 4.3.4

4.3.5 CONFIGURATION

The CONFIGURATION menu item provides access to a series of sub-menus to configure various parameters of the unit, DTE and network.

Highlight CONFIGURATION in the INVERSE MULTIPLEXER main menu and strike the ENTER key to access the CONFIGURATION Menu shown in Figure 4.3.5.

CONFIGURATION

```
Major          11/18/91  17:56:47      Unit:1      NET : 2     (33)
        Loss of Frame
Idled          11/18/91  17:56:58      Unit: 1     NET :2      (13)
        Loss of Frame Idled

DIGITAL LINK DL3800 SR XX  NODE 1:HOME  mm/dd/yy hh:mm:ss MN
SELECTED DEVICE ADDRESS:  1.00.000  NAME:HOME

   CONFIGURATION MENU      EXIT

        Unit
        DTE
        Network
        Network Thresholds
        Save Configuration
```

Figure 4.3.5

To access any of the configuration sub-menus, highlight the desired item and strike the ENTER key. Following are samples and descriptions of the sub-menus that can be accessed from the CONFIGURATION menu.

4.3.5.1 UNIT CONFIGURATION

Highlighting UNIT and striking the ENTER key accesses the UNIT CONFIGURATON menu shown in Figure 4.3.5.1. The configurable items and options are described in Table 4.3.5.1.

The following parameters can be set or changed for the Node: DATE; TIME; ALARM ENABLE, AUTOMATIC BACKUP; FRONT PANEL; UNIT NUMBER, UNIT NAME and LOCAL TERMINAL BAUD RATE, BITS/PARITY, STOP BITS, X-ON/X-OFF and MULTIDROP MODE. HARDWARE, SOFTWARE and MIB REVISIONS are view only items and cannot be changed.

UNIT CONFIGURATION MENU

```
Major          11/18/91  17:56:47        Unit:1      NET : 2     (33)
          Loss of Frame
Idled          11/18/91  17:56:58        Unit: 1     NET :2      (13)
          Loss of Frame Idled

DIGITAL LINK DL3800 SR XX  NODE 1:HOME  mm/dd/yy  hh:mm:ss  MN
SELECTED DEVICE ADDRESS:  1.00.000  NAME:HOME

  UNIT CONFIGURATION   Exit          Confirm
    DATE: 11/18/91
    TIME: 21:22.:54
    ALARM ENABLE:  Disabled
    AUTOMATIC BACKUP:  1 minute after each database change
    FRONT PANEL: On
    UNIT NUMBER:  1
    UNIT NAME:  TOP
    HARDWARE REVISION:  A
    SOFTWARE REVISION:  0.01.29       (DOWNLOADED)
    MIB REVISION:  1.01  AUGUST 24, 1993

    TERMINAL BAUD RATE:  9600
    TERMINAL #BITS AND PARITY:  8 bits, No parity
    TERMINAL STOP BITS:  2 bits
    TERMINAL XON/XOFF:  Enabled
    TERMINAL MULTIDROP:  Enabled
```

FIGURE 4.3.5.1

NODE CONFIGURATION OPTIONS

1) DATE -Move the highlight bar to "DATE" and enter a valid date with the format MM/DD/YY and strike the ENTER key when finished.

MM	1-12	month
DD	1-31	date
YY	0-99	year

2) TIME - Move the highlight bar to "TIME" and enter a valid time with the format HH:MM:SS and strike the ENTER key when finished.

HH	0-23	hours
MM	0-59	minutes
SS	0-59	seconds

3) ALARM ENABLE - This option allows the user to ENABLE or DISABLE the DL3800 from reporting Network, DTE and common equipment alarms. Highlight ALARM ENABLE and, using the space bar, toggle between ENABLED and DISABLED until the desired choice appears.

Table 4.3.5.1

4) AUTOMATIC BACKUP - This feature allows the user to backup the database to the EEPROM automatically at certain intervals or manually. To change the present backup mode, highlight AUTOMATIC BACKUP and use the space bar to toggle between the following choices; after every database change, 15 seconds, 30 seconds, 1 minute or five minutes after each change, or OFF (must change manually with SAVE CONFIGURATION).

5) FRONT PANEL - This feature enables (ON) or disables (OFF) the users ability to make changes in the configuration or run tests from the front panel display and buttons. To change FRONT PANEL feature, highlight "FRONT PANEL" and use the space bar to toggle between OFF and ON

6) UNIT NUMBER - Move the highlight bar to UNIT NUMBER and enter a number between 0 and 9999. Strike the ENTER key when finished.

7) UNIT NAME - Move the highlight bar to UNIT NAME and enter alphanumeric name of up to 20 digits. Strike the ENTER key when finished.

8) TERMINAL BAUD RATE - This feature selects the terminal baud rate. To set or change the baud rate, move the highlight bar to TERMINAL BAUD RATE and hit the Space Bar to toggle between the options; 300, 600, 1200, 2400, 4800, 9600, 19,200 and 38,400.

9) TERMINAL PARITY & BITS - This feature selects the terminal parity. To set or change the local terminal parity, move the highlight bar to TERMINAL PARITY & BITS and hit the Space Bar to toggle between the options; NONE, ODD and EVEN.

10) TERMINAL STOP BITS - This feature selects the terminal stop bit requirement. To set or change the requirement, move the highlight bar to TERMINAL STOP BITS and hit the Space Bar to toggle between the options. The options are 1, 1.5 or 2.

11) TERMINAL XON/XOFF - This allows the user to enable or disable the XON/XOFF Flow Control feature. With the Flow Control feature ON, the terminal can request that the DTE quit sending data when its buffers are full. To set or change this feature, move the highlight bar to TERMINAL XON/XOFF and use the space bar to select choice.

12) TERMINAL MULTIDROP MODE - If the terminal is connected to more than one DL3800, it must be in MULTIDROP MODE. If it is connected to only one unit, this feature can be disabled. When it is disabled, the system starts up directly, without the user having to log in (See Section 4.1). To change this configuration, move the highlight bar to TERMINAL MULTIDROP MODE and use the space bar to toggle between the options, ENABLED and DISABLED.

TABLE 4.3.5.1 continued

To update the node database with all the changes made, move the highlight bar to CONFIRM and strike the ENTER key. Changes can be confirmed after each change, or, after all changes have been made. This completes the node configuration. To abort the changes, move the highlight bar to EXIT and strike ENTER before confirming the changes. (Note: If the terminal speed, parity or stop bits are changed, it is necessary to change the local terminal before continuing.)

4.3.5.2 DTE CONFIGURATION

This menu allows the user to configure certain parameters of the DTE, including the interface type, clock source, status of leads and loss criteria.

To access the DTE CONFIGURATION menu, move the highlight bar to DTE CONFIGURATION in the CONFIGURATION menu and hit ENTER. Figure 4.3.5.2 is an example of the DTE CONFIGURATION menu and Table 4.3.5.2 describes the menu items.

DTE CONFIGURATION MENU

```
Major          11/18/91  17:56:47        Unit:1      NET : 2     (33)
        Loss of Frame
Idled          11/18/91  17:56:58        Unit: 1     NET :2      (13)
        Loss of Frame Idled

DIGITAL LINK DL3800 SR XX  NODE 1:HOME  mm/dd/yy  hh:mm:ss  MN
SELECTED DEVICE ADDRESS:  1.00.000  NAME:HOME

   DTE CONFIGURATION          Exit          Confirm

        DTE INTERFACE  V.35

   V.35/RS-449 OPTIONS:
        CLOCK:     SCT   Tx Clock: INVERTED   Rx Clock: INVERTED
        RLSD MODE:              AUTOMATIC
        DSR MODE:               AUTOMATIC
        CTS MODE:               AUTOMATIC
        TM MODE:                AUTOMATIC
        DTE LOSS DETECTION:  RTS
```

Figure 4.3.5.3

DTE INTERFACE - This allows the user to select V.35, RS449 or HSSI as the DTE INTERFACE. To change the present DTE INTERFACE, use the up and down arrow keys to highlight DTE INTERFACE use the space bar to toggle between V.35, RS-449 and HSSI until the desired choice appears. Highlight CONFIRM and strike the ENTER key to confirm the change.

CLOCK - This line item allows the user to enable either the SCT or SCTE leads and to set the transmit (Tx) and receive (Rx) to Normal or Inverted mode. To set the DTE CLOCK parameters, use the up and down arrow keys to highlight the configurable CLOCK items and use the space bar to toggle between the selections until the desired choice appears. The options are SCT or SCTE, Tx NORMAL or INVERTED and Rx NORMAL or INVERTED. When the desired selection is in the display, highlight CONFIRM and strike the ENTER key to confirm the change.

RLSD (Receive Line Signal Detected) - This allows the user to ASSERT, DEASSERT, or set to AUTOMATIC the RLSD leads. To change or set the RLSD lead status, use the up and down arrow keys to highlight RLSD and use the space bar to toggle between ASSERT, DEASSERT or AUTOMATIC until the desired choice appears. Highlight CONFIRM and strike the ENTER key to confirm the change.

DSR (Data Set Ready) - This allows the user to ASSERT, DEASSERT, or set to AUTOMATIC the DSR leads. To change or set the DSR lead status, use the up and down arrow keys to highlight RLSD and use the space bar to toggle between ASSERT, DEASSERT or AUTOMATIC until the desired choice appears. Highlight CONFIRM and strike the ENTER key to confirm the change.

CTS (Clear to Send) - This allows the user to ASSERT, DEASSERT, or set to AUTOMATIC the CTS leads. To change or set the CTS lead status, use the up and down arrow keys to highlight CTS and use the space bar to toggle between ASSERT, DEASSERT or AUTOMATIC until the desired choice appears. Highlight CONFIRM and strike ENTER to confirm the change.

TM (Test Mode) - This allows the user to ASSERT, DEASSERT, or set to AUTOMATIC the TM leads. To change or set the TM lead status, use the up and down arrow keys to highlight TM and use the space bar to toggle between ASSERT, DEASSERT or AUTOMATIC until the desired choice appears. Highlight CONFIRM and strike ENTER to confirm the change.

DTE LOSS DETECTION - This allows the user to set the criteria by which a DTE Loss of Signal will be detected. To change or set the DTE LOSS criteria, use the up and down arrow keys to highlight DTE LOSS DETECTION and use the space bar to toggle between the choices; RTS, DTR and NONE. When the desired choice is shown, highlight CONFIRM and strike ENTER to confirm the change.

Table 4.3.5.2

4.3.5.3 NETWORK CONFIGURATION

This menu item allows the user to set various parameters of each of the T1 lines, as well as select the primary and secondary clock sources, various thresholds.

To access the NETWORK CONFIGURATION menu, move the highlight bar to NETWORK CONFIGURATION in the CONFIGURATION Menu and hit ENTER.

The DL3800 is ordered from the factory for operation as either a DSU or a CSU. The NETWORK CONFIGURATION menu will be slightly different, depending on which version DL3800 is being used. Figure 4.3.5.3a shows the NETWORK CONFIGURATION menu of the DSU version and Figure 4.3.5.3b shows the screen when of the CSU version. Table 4.3.5.3 describes the various parameters included.

NETWORK CONFIGURATION SCREEN (DSU MODE)

```
Major          11/18/91  17:56:47      Unit:1      NET : 2     (33)
          Loss of Frame
Idled          11/18/91  17:56:58      Unit: 1     NET :2      (13)
          Loss of Frame Idled

DIGITAL LINK DL3800 SR XX  NODE 1:HOME  mm/dd/yy hh:mm:ss MN
SELECTED DEVICE ADDRESS:  1.00.000  NAME:HOME


NETWORK CONFIGURATION        Exit        Confirm

Port  Alarm   Active/Restore Mode   Frame  Linecode  Equal..  FDL  Set/Reset
 1    Report    Use w/auto restore  ESF      B8ZS    0'-132'  ON   Enable
 2    Report    Use w/auto restore  ESF      B8ZS    0'-132'  ON   Enable
 3    Report    Always use          ESF      B8ZS    0'-132'  ON   Enable
 4    Mask      Never use           ESF      B8ZS    0'-132'  ON   Enable
 5    Mask      Never use           ESF      B8ZS    0'-132'  ATT  Disable
 6    Mask      Never use           ESF      B8ZS    0'-132'  ATT  Disable
 7    Mask      Never use           ESF      B8ZS    0'-132'  ATT  Disable
 8    Mask      Never use           ESF      B8ZS    0'-132'  ATT  Disable

Primary Clock Source:    Xmt:  Net   Rcv:  Net 1
Secondary Clock Source:  Xmt:  Net   Rcv:  Net 2
DSU MODE: Single T1 DSU        Suppress Yellow Detect:  Enabled
Second Error restoral interval:  5 minutes
Hardware Revision:        Port 3&4:     Port 5&6:     Port 7&8
```

Figure 4.3.5.3a

NETWORK CONFIGURATION SCREEN (CSU MODE)

```
Major          11/18/91  17:56:47      Unit:1      NET : 2     (33)
               Loss of Frame
Idled          11/18/91  17:56:58      Unit: 1     NET :2      (13)
               Loss of Frame Idled

DIGITAL LINK DL3800 SR XX  NODE 1:HOME  mm/dd/yy hh:mm:ss MN
SELECTED DEVICE ADDRESS:  1.00.000  NAME:HOME

NETWORK CONFIGURATION        Exit        Confirm

Port  Alarm   Active/Restore  Frame  Linecode  LBO  JIT  EGL  FDL  Set/Reset
 1    Report    Always use    ESF    B8ZS      0dB  TX   36   ON   Enable
 2    Report    Never use     ESF    B8ZS      0dB  TX   36   ON   Enable
 3    Report    Never use     ESF    B8ZS      0dB  TX   36   ON   Enable
 4    Mask      Never use     ESF    B8ZS      0dB  RX   36   ON   Enable
 5    Mask      Never use     ESF    B8ZS      0dB  RX   36   ATT  Disable
 6    Mask      Never use     ESF    B8ZS      0dB  RX   36   ATT  Disable
 7    Mask      Never use     ESF    B8ZS      0dB  RX   36   ATT  Disable
 8    Mask      Never use     ESF    B8ZS      0dB  RX   36   ATT  Disable

Primary Clock Source:    Xmt: Net   Rcv:  Net 1
Secondary Clock Source:  Xmt: Net   Rcv:  Net 2
DSU MODE: Inverse Mux (Standard Operation)  Suppress Yellow Detect: Enabled
Second Error restoral interval:  5 minutes
Hardware Revision:       Port 3&4:    Port 5&6:    Port 7&8
```

Figure 4.3.5.3b

ALARM - This item allows the user to enable (REPORT) or disable (MASK) the DL3800 from reporting alarms from any of the individual T1 network ports. To change the present ALARM mode, use the up and down arrow keys to highlight the ALARM item in the appropriate line for the desired port and use the space bar to toggle between REPORT and MASK. Highlight CONFIRM and strike the ENTER key to confirm any change.

ACTIVE/RESTORE MODE - This option selects the ACTIVE/RESTORE MODE the each of the T1 network ports. To change the present mode, use the up and down arrow keys to highlight the ACTIVE/RESTORE MODE option for the desired port and use the space bar to toggle between the following selections until the desired choice appears: Use w/auto restore (failed line is restored automatically when problem is solved); Use w/manual restore (user must manually restore line); Never Use (never mux data onto this line); Always Use (always mux data onto this line, even when it is bad)

Table 4.3.5.3

FRAMING FORMAT - This allows the user to select either ESF or D4 (SF) as the FRAMING FORMAT for the individual T1 network ports. To change the present FRAMING FORMAT mode, use the up and down arrow keys to highlight the FRAMING FORMAT item in the appropriate line for the desired port and use the space bar to toggle between ESF and D4 until the desired choice appears.

LINE CODE - This allows the user to select either B8ZS or AMI as the LINE CODE for the individual T1 network ports. To change the present LINE CODE , use the up and down arrow keys to highlight the LINE CODE item in the appropriate line for the desired port and use the space bar to toggle between ESF and D4 until the desired choice appears.

EQUALIZATION (DSU ONLY)- This allows the user to select LINE EQUALIZATION distance for the individual T1 network ports. To change the present EQUALIZATION level, use the up and down arrow keys to highlight the EQUALIZATION item in the appropriate line for the desired port and use the space bar to toggle between the following selections until the desired choice appears: 0'-132'; 133'-265'; 266'-398'; 399'-532' or 533'-655'..

LBO (CSU ONLY)- This allows the user to select the LBO (LINE BUILDOUT) for the individual T1 network ports. To change the present LBO, use the up and down arrow keys to highlight the LBO item in the appropriate line for the desired port and use the space bar to toggle between the following selections until the 0dB, -7.5dB, -15dB and -22.5dB.

JIT (CSU ONLY)- This allows the user to set JITTER ATTENUATION to either the Transmit (TX) or Receive (RX) side of the line. To change the present JITTER ATTENUATION side, use the up and down arrow keys to highlight the JIT item in the appropriate line for the desired port and use the space bar to toggle between 36dB and <26dB until the desired choice appears.

EGL (CSU ONLY) - This allows the user to set the EQUALIZER GAIN LIMIT at either up to 36dB or less than 26dB. To change the present EQUALIZER GAIN LIMIT, use the up and down arrow keys to highlight the EGL item in the appropriate line for the desired port and use the space bar to toggle between TX and RX until the desired choice appears

FDL - This allows the user to turn the FDL ON or OFF and to select AT&T 54016 or ANSI T1.403 reporting standards. When ON, the DL3800 supports both standards. When set to ATT or ANSI, the user is selecting ONLY that standard. To change the FDL, highlight the FDL line for the desired port and, using the space bar, toggle between ON, OFF, ATT and ANSI until the desired choice appears.

Table 4.3.5.3

SET/RESET - This allows the user to set the DL3800 to recognize (ENABLE) or ignore (DISABLE) the standard CSU loop back set and reset codes. Highlight the SET/RESET line for the desired port and, using the space bar, toggle between ON, OFF, ATT and ANSI until the desired choice appears.

PRIMARY CLOCK SOURCE - This allows the user to select either the PRIMARY CLOCK SOURCE, transmit (xmt) and receive (rcv) for the individual T1 network ports. To change the present Primary Clock Source, use the up and down arrow keys to highlight either Xmt or Rcv on the Primary Clock Source line and use the space bar to toggle between the choices. For Xmt (transmit) the choices are Network (NET), External (EXT) and Internal (INT). For Rcv (receive) the choices are Net-1 through Net 8 (each of the individual T1 network ports) or Auto (the unit selects the best source).

SECONDARY CLOCK SOURCE - This allows the user to select either the SECONDARY CLOCK SOURCE, transmit (xmt) and receive (rcv) for the individual T1 network ports. To change the present SECONDARY CLOCK SOURCE, use the up and down arrow keys to highlight either Xmt or Rcv on the Secondary Clock Source line and use the space bar to toggle between the choices. For Xmt (transmit) the choices are Network (NET), External (EXT) and Internal (INT). For Rcv (receive) the choices are Net-1 through Net 8 (each of the individual T1 network ports) or Auto (the unit selects the best source) until the desired choice appears.

DSU MODE - This allows the user to set the DL3800 up as a DSU, with one DTE and one Network port. To change the present DSU MODE level, use the up and down arrow keys to highlight the DSU MODE item and use the space bar to toggle between the following selections until the desired choice appears: INVERSE MUX (standard operation) or SINGLE T1 DSU. Highlight CONFIRM and strike the ENTER key to confirm the change.

SUPPRESS YELLOW DETECT - This item allows the user to configure the unit to ignore or report yellow alarm conditions when in D4 framing. To change the present SUPPRESS YELLOW DETECT, use the up and down arrow keys to highlight the item and use the space bar to toggle between ENABLED and DISABLED until the desired choice appears. Highlight CONFIRM and strike the ENTER key to confirm the change.

SECOND ERROR RESTORAL INTERVAL - This item selects the time that a failed T1 line must run without errors in order to be restored automatically. If a network alarm is exceeded for a second time within the selected window (15 minutes or 24 hours), the line will not be restored. To change the present Restoral Interval, use the up and down arrow keys to highlight the item and use the space bar to toggle between the following selections until the desired choice appears: Immediate, 5, 10, 15 or 30 seconds and 1, 5, 10 and 15 minutes).

Table 4.3.5.3

4.3.5.4 NETWORK THRESHOLDS

This Menu allows the user to enable/disable the automatic FALLBACK feature and set the various Network Alarm Thresholds that will cause the T1 lines to automatically be taken out of service.

Figure 4.3.5.4 is an example of the NETWORK ALARM THRESHOLDS configuration screen.

NETWORK THRESHOLDS CONFIGURATION

```
Major          11/18/91  17:56:47        Unit:1       NET : 2      (33)
          Loss of Frame
Idled          11/18/91  17:56:58        Unit: 1      NET :2       (13)
          Loss of Frame Idled

DIGITAL LINK DL3800  SR XX  NODE  1:HOME  mm/dd/yy  hh:mm:ss  MN
SELECTED DEVICE ADDRESS:  1.00.000   NAME:HOME

NETWORK ALARM THRESHOLDS   Exit   Confirm

CONSECUTIVE THRESHOLDS          FALLBACK        SECONDS
     CRC Seconds                Enabled         31
     SES                        Disabled        10
     UAS                        Disabled        10

INTERVAL THRESHOLDS      15 MINUTES          24 HOURS
                FALLBACK   MAJOR  MINOR   FALLBACK   MAJOR  MINOR
 BPV Err Sec (10E-3) Enabled   100    100     Disabled    10     10
 CRC Seconds        Disabled   100    100     Disabled    10     10
 ES                 Disabled   100    100     Disabled    10     10
 SES                Disabled   100    100     Disabled    10     10
 UAS                Disabled   100    100     Disabled    10     10
```

FIGURE 4.3.5.2

Through the CONSECUTIVE THRESHOLDS section of this menu, the user disables or enables the fallback condition relating to the number of consecutive seconds (from 1 to 100) in which a CRC, SES or UAS alarm threshold is exceeded. To Enable or Disable the FALLBACK feature, highlight the appropriate item and use the space bar to select your choice. To change the number of errored consecutive seconds that will cause that T1 line to go out of service, highlight the appropriate item and strike ENTER. When the highlight bar is blank, type in the number of seconds desired.

The INTERVAL THRESHOLDS section of this menu allows the user to enable or disable the FALLBACK feature relating to the number of in-error seconds (from 1 to 900) occurring in a 15-minute period or number of in-error 15-minute intervals in a 24-hour period that will cause a MAJOR or MINOR alarm. To Enable or Disable the FALLBACK feature, highlight the appropriate item and use the space bar to select your choice. To change the number of in error seconds or 15-minute intervals that will cause a MAJOR or MINOR network alarm, highlight the appropriate item and strike ENTER. When the highlight bar is blank, type in the number desired.

4.3.5.5 SAVE CONFIGURATION

This option allows the user to manually backup the database to EEPROM at any time To SAVE CONFIGURATION and backup the database to EEPROM, highlight the SAVE CONFIGURATION in the CONFIGURATION menu and strike the ENTER key.

4.3.6 SYSTEM UTILITIES

The SYSTEM UTILITIES MENU in the INVERSE MULTIPLEXER Main Menu is used to access sub-menus in the DL3800 to configure various system utilities and perform certain functions with the DL3800. These SYSTEM UTILITIES include SOFTWARE DOWNLOAD, DELETE ENTIRE NODE CONFIGURATION, LOGIN CONFIGURATION, SNMP CONFIGURATION, AND SAVE CONFIGURATION.

To access the SYSTEM UTILITIES MENU, highlight SYSTEM UTILITIES in the INVERSE MULTIPLEXER MAIN MENU and strike the ENTER key.

Figure 4.3.6 is an example of the SYSTEM UTILITIES MENU that will appear. To access any of the sub-menus or perform certain functions, highlight that line item and strike the ENTER key.

SYSTEM UTILITIES MENU

```
Major          11/18/91  17:56:47        Unit:1      NET : 2     (33)
        Loss of Frame
Idled          11/18/91  17:56:58        Unit: 1     NET :2      (13)
        Loss of Frame Idled

DIGITAL LINK DL3800 SR XX  NODE 1:HOME  mm/dd/yy hh:mm:ss MN
SELECTED DEVICE ADDRESS:  1.00.000  NAME:HOME

   SYSTEM UTILITIES MENU                Exit
        Software Download
        DELETE Entire Unit Configuration
        Login Configuration
        SNMP Configuration
        SAVE Configuration
```

Figure 4.3.6

4.3.6.1 SOFTWARE DOWNLOAD

This selection allows the user to choose the desired mode for upgrading the software revision level of the DL3800 via download if this option is available.

Highlight SOFTWARE DOWNLOAD in the SYSTEM UTILITIES menu and hit ENTER. The SOFTWARE DOWNLOAD Menu (Figure 4.3.6.1) will appear on the screen.

SOFTWARE DOWNLOAD MENU

```
Major          11/18/91  17:56:47        Unit:1      NET : 2     (33)
        Loss of Frame
Idled          11/18/91  17:56:58        Unit: 1     NET :2      (13)
        Loss of Frame Idled

DIGITAL LINK DL3800 SR XX  NODE 1:HOME  mm/dd/yy hh:mm:ss MN
SELECTED DEVICE ADDRESS:  1.00.000  NAME:HOME

   DOWNLOAD NEW SOFTWARE      Exit      Confirm

   DOWNLOAD PROTOCOL:  None
```

Figure 4.3.6.1

To download new software to the DL3800, the following equipment is needed.

* An IBM PC with hard disk drive capable of reading an MS DOS binary file is required. Digital Link provides a 3.5 inch floppy formatted for 1.4 MBytes for downloading software.

* A terminal emulation program such as Procomm, Mirror or Xtalk with VT100 or ANSI emulation that supports Xmodem binary transfer protocol is required.

* Make the proper RS232 connection between the PC and the DL3800. A DB9 (terminal) connector is pinned out on the DL3800 such that the use of a null modem is not necessary. DB9 to DB25 adaptors may be needed depending upon the PC used.

Perform the following steps to download software:

1. Copy the files, DL3800.RAM off the floppy onto the hard drive on the PC.

2. Execute the emulation program on the PC and set it up match the DL3800 comm port configuration. Default configuration for the DL3800 is 9600 Baud, 8 bits, No parity, 2 stop bits and connect the PC serial port to the DL3800.

3. If the DL3800 is set up for "Direct Terminal" configuration, typing a "Ctrl-L" will refresh the screen. If it is set up for multidrop mode, see Section 4.1 on how to Log in to a unit.

4. Select the "Software Download" option on the main menu then scroll down to where it says "None" and hit the space bar until the desired mode appears and hit ENTER. The DL3800 is now ready to receive a file.

5. Enter the file transfer mode on the terminal emulation program and transfer the appropriate file. The file transfer will take at least 30 minutes at 9600 baud.

6. Once the file has downloaded, the DL3800 will take up to 30 seconds to reboot. This will be done automatically. If any communications errors were encountered, it may be necessary to perform this operation again.

Note: The following steps are recommended before initiating the download process:

* Disable all control lead dependencies (RTS, CTS, DCD, etc.)

* Enable XON/XOFF flow control.

* Disable DCD (Data Carrier Detect) aborts (especially on Procomm.

4.3.6.2 DELETE ENTIRE NODE CONFIGURATION ** WARNING: THIS COMMAND MAY ADVERSELY AFFECT SERVICE**

Deleting the node database causes the node, and any other device's database within that node, to be reset to the factory default setting. All device names will be erased, and all connections will be removed. The time and date, however, will remain the same and the node number will be set to "0.00.00".

As the warning states above, if there are any valid connections in the node, execution of this command may interrupt service.

To delete the entire Node configuration, move the highlight bar to DELETE ENTIRE NODE CONFIGURATION and strike the ENTER key. The change must then be confirmed. Move the highlight bar to CONFIRM and strike the ENTER key. Deleting the entire Node configuration puts all parameters back to their Factory Default Settings.

4.3.6.3 LOGIN CONFIGURATION

This screen allows the user to designate a NAME, PASSWORD and ACCESS PRIVILEGE LEVEL for up to eight users.

When the unit is shipped, the factory default is "no name" and "no password." Striking the ENTER key bypasses both of these parameters until the first name and password are entered.

To access the LOGIN CONFIGURATION menu, move the highlight bar to LOGIN CONFIGURATION in the Node Main Menu and strike the ENTER key. Figure 4.3.6.3 is an example of the LOGIN CONFIGURATION MENU.

```
Major          11/18/91  17:56:47        Unit:1        NET : 2       (33)
          Loss of Frame
Idled          11/18/91  17:56:58        Unit: 1       NET :2        (13)
          Loss of Frame Idled

DIGITAL LINK DL3800  SR XX  NODE  1:HOME  mm/dd/yy  hh:mm:ss  MN
SELECTED DEVICE ADDRESS:  1.00.000  NAME:HOME

   LOGIN CONFIGURATION      Exit      Confirm
     User Identification      Password          Access Type(s)

   1      Wilson              Woodrow           Full Access
   2      Hoover              Herbert           Maintenance
   3      Franklin            Ben               Provision
   4      Bermuda             Atlantic          Full Access
   5                                            No Access
   6                                            No Access
   7                                            No Access
   8                                            No Access

AUTOMATIC LOGOUT: Off. (Must use Logout to return to login prompt).
```

FIGURE 4.3.6.3

Note: Name and Password are "case sensitive."

Only those users who are granted "Full Access" class can view or change this screen.

The name and password can be any alphanumeric designation up to 16 characters in length. To enter a name or password, move the highlight bar to the appropriate line and column and type in the alphanumeric designation. Move the highlight bar to CONFIRM and strike ENTER to confirm the changes.

To designate the access privileges that a particular user is to be allowed, move the highlight bar to that column of the menu on the user line and, using the space bar, toggle between the following options; FULL ACCESS, MAINTENANCE, PROVISION, PROVISION+MAINTENANCE, NO ACCESS and DISPLAY ONLY.

FULL ACCESS CLASS allows the user to view any menu and perform any function. It is the only access class where the user is allowed to view the LOGIN CONFIGURATION menu and assign names, passwords and access levels to users. This user is also the only one who can change the SNMP Configuration, Download Software or Delete Entire Node Configuration.

MAINTENANCE designation allows the user to clear the event history Log, clear statistics and initiate tests.

PROVISION access level allows the user to configure the DL3800.

PROVISION+MAINTENANCE allows the user to perform all functions allowed PROVISION and MAINTENANCE access described above.

DISPLAY ONLY allows the user access to view only screens. This user is not allowed to make any changes or initiate tests.

NO ACCESS is just that, the user is not allowed to access the Menu Screens.

Note: If a user tries to access a screen or perform a function beyond the particular access level allowed, the following message will appear on the screen; **"Access denied - your account does not have this PRIVILEGE."**

AUTOMATIC LOGOFF allows the user to turn off the Automatic Logoff feature of the DL3800. Highlight the item and, using the space bar, toggle between OFF and ON until your selection appears. Move the highlight to CONFIRM and strike ENTER to confirm the change.

4.3.6.4 SNMP CONFIGURATION

Through the SNMP CONFIGURATION menu, the user configures the Network Manager (NMS) port on the rear panel of the DL3800, setting various addresses and configurable items required for operation with an SNMP Network Manager. The DL3800 utilizes SLIP protocol over the RS232 port to communicate with the SNMP management station.

To access the SNMP CONFIGURATION menu, move the highlight bar to SNMP CONFIGURATION in the CONFIGURATION Menu and hit ENTER.

These parameters can be set or changed for SNMP operation: NODE IP ADDRESS, NODE IP SUBNET MASK, TRAP IP ADDRESS, READ COMMUNITY STRING, WRITE COMMUNITY STRING, TRAP COMMUNITY STRING, SNMP BAUD RATE, BITS/PARITY, and STOP BITS.

Figure 4.3.6.4 is an example of the SNMP CONFIGURATION MENU and Table 4.3.6.4 describes the SNMP parameters.

SNMP CONFIGURATION MENU

```
Major          11/18/91  17:56:47      Unit:1      NET : 2      (33)
        Loss of Frame
Idled          11/18/91  17:56:58      Unit: 1     NET :2       (13)
        Loss of Frame Idled

DIGITAL LINK DL3800 SR XX  NODE 1:HOME  mm/dd/yy hh:mm:ss MN
SELECTED DEVICE ADDRESS:  1.00.000  NAME:HOME

    SNMP  CONFIGURATION      Exit          Confirm
    NMS Serial Port (SLIP)
    Unit IP Address  1.000.003.001   Unit IP Subnet Mask  255.255.255.000
    Trap IP Address  1.000.003.113

    Read Community String        public
    Write Community String       public
    Trap Community String        public

    SNMP Baud Rate               9600
    SNMP # Bits & Parity         8 bits, No parity
    SNMP Stop Bits               2 bits
```

FIGURE 4.3.6.4

SNMP CONFIGURATION OPTIONS

1) UNIT IP ADDRESS - The UNIT IP ADDRESS is a 32-bit quantity which uniquely identifies the node in the SNMP network. This address is used by the SNMP manager to access information from the node. To set or change the UNIT IP ADDRESS, move the highlight bar to UNIT IP ADDRESS and enter a 32-bit quantity. Strike ENTER.

2) UNIT IP SUBNET MASK - The UNIT IP SUBNET MASK is a 32-bit quantity that identifies which bits in the IP address identify the physical network. To set or change the UNIT SUBNET MASK, move the highlight bar to UNIT SUBNET MASK and enter a 32-bit quantity. Strike ENTER when finished.

3) TRAP IP ADDRESS - The TRAP IP ADDRESS is a 32-bit quantity that identifies the SNMP manager, the address to which the node sends any event messages. To set or change the TRAP IP ADDRESS, move the highlight bar to TRAP IP ADDRESS and enter a 32-bit quantity. Strike ENTER when finished.

Table 4.3.6.4

4) READ COMMUNITY STRING - This alphanumerical indentifier, up to 32 characters in length, identifies a portion of the SNMP network that is able to read messages from the node. To set or change the READ COMMUNITY STRING, move the highlight bar to READ COMMUNITY STRING and enter an alphanumerical identifier, up to 32 characters in length. Strike ENTER when finished.

5) WRITE COMMUNITY STRING - This alphanumerical indentifier, up to 32 characters in length, identifies a portion of the SNMP network that can write messages to the node. To set or change the WRITE COMMUNITY STRING, move the highlight bar to WRITE COMMUNITY STRING and enter an alphanumerical identifier, up to 32 characters in length. Strike ENTER when finished.

6) TRAP COMMUNITY STRING - This alphanumerical indentifier, up to 32 characters in length, identifies a portion of the SNMP network that is able to receive event messages from the node. To set or change the TRAP COMMUNITY STRING, move the highlight bar to TRAP COMMUNITY STRING and enter an alphanumerical identifier. Strike ENTER when finished.

7) SNMP BAUD RATE - This feature selects the SNMP port's baud rate. To set or change the SNMP port baud rate, move the highlight bar to SNMP BAUD RATE and hit the Space Bar to toggle between the options until the desired speed appears. The options are: 300, 600, 1200, 2400, 4800, 9600, 19,200 and 38,400..

8) SNMP BITS & PARITY- This feature selects the SNMP port's parity. To set or change the SNMP PARITY, move the highlight bar to SNMP BITS & PARITY and hit the Space Bar to toggle between the options until the desired parity appears. The options are: NONE, ODD and EVEN. BITS is always set at 8.

9) SNMP STOP BITS - This feature selects the SNMP manager stop bit requirement. Move the highlight bar to SNMP STOP BITS and hit the Space Bar to toggle between the options, 1, 1.5 or 2.

Table 4.3.6.4

To update the SNMP database with all the changes made, move the highlight bar to CONFIRM and strike the ENTER key. Changes can be confirmed after each change, or, after all changes have been made. (Note: If the SNMP baud rate is changed, it is necessary to change the baud rate at the connection to the SNMP manager before continuing. The same is true for modifying the parity and/or number of stop bits.)

4.3.6.5 SAVE CONFIGURATION

This option allows the user to manually backup the database to EEPROM at any time To SAVE CONFIGURATION and backup the database to EEPROM, highlight the SAVE CONFIGURATION in the SYSTEM UTILITIES menu and strike the ENTER key.

4.3.7 TESTS

The TESTS Menu allows the user to initiate or stop three types of loopbacks; a DTE/NETWORK LOOPBACK for the DTE, and PAYLOAD, LINE and LOCAL LOOPBACKS for each individual network port.

To access the TESTS menu, move the highlight bar to TESTS in the DL3800 Main Menu and hit ENTER.

Figure 4.3.7 is an example of the SNMP CONFIGURATION MENU. The individual loopbacks and operation of the menu are described below in the text following the menu

TESTS MENU

```
Major          11/18/91  17:56:47        Unit:1      NET : 2     (33)
          Loss of Frame
Idled          11/18/91  17:56:58        Unit: 1     NET :2      (13)
          Loss of Frame Idled

DIGITAL LINK DL3800 SR XX  NODE 1:HOME  mm/dd/yy  hh:mm:ss  MN
SELECTED DEVICE ADDRESS:  1.00.000  NAME:HOME

   DTE AND NETWORK TESTS              Exit        Confirm

   DTE TESTS:
         DTE/NETWORK  LOOPBACK:  Off

   NETWORK  TESTS:
 PORT#  PAYLOAD LOOPBACK   LINE LOOPBACK   LOCAL LOOPBACK
   1          Off              Off              Off
   2          Off              Off              Off
   3          Off              Off              Off
   4          Off              Off              Off
   5          Off              Off              Off
   6          Off              Off              Off
   7          Off              Off              Off
   8          Off              Off              Off
```

FIGURE 4.3.7

To initiate a test, use the CURSOR keys to move the highlight bar to DTE/Network Loopback or a Payload or Line Loopback on a selected port. Use the space bar to toggle between OFF and ON until ON appears in the display. When that selection appears in the display, move the highlight bar to CONFIRM and strike the ENTER key. To cancel a test that is running, move the highlight bar to DTE/Network Loopback. Use the space bar to toggle between the options until OFF appears in the display. Move the highlight bar to CONFIRM and press the ENTER key.

DTE/NETWORK LOOPBACK

The DTE/NETWORK LOOPBACK is a bi-directional loop back that loops the received DTE signal back to the DTE and the signal from the T1 processor back towards the T1 network. This loopback is used to verify the operation of the DTE and associated cabling.

PAYLOAD LOOPBACK

The payload loopback is used to verify proper T1 network operation of the DL3800 and the T1 network. The Payload Loopback loops the payload data received from the T1 network back towards the network. The data is regenerated and a new framing pattern is inserted prior to being looped back. In this way the T1 framing of the unit and network can be verified.

LINE (NETWORK) LOOPBACK

The line (network) loopback is used to verify the operation of the T1 network. The local loopback loops the data received from the T1 network back towards the network. The data is regenerated prior to being looped back, however, no additional processing of the data is done by the DL3800. This minimizes the impact of the DL3800 during this test so that network problems can be isolated.

LOCAL (NETWORK) LOOPBACK

The local (network) loopback is used to verify the operation of the DTE and connections.

** WARNING; THE LOOPBACK TESTS <u>WILL</u> INTERRUPT TRAFFIC TO THE DL3800.**

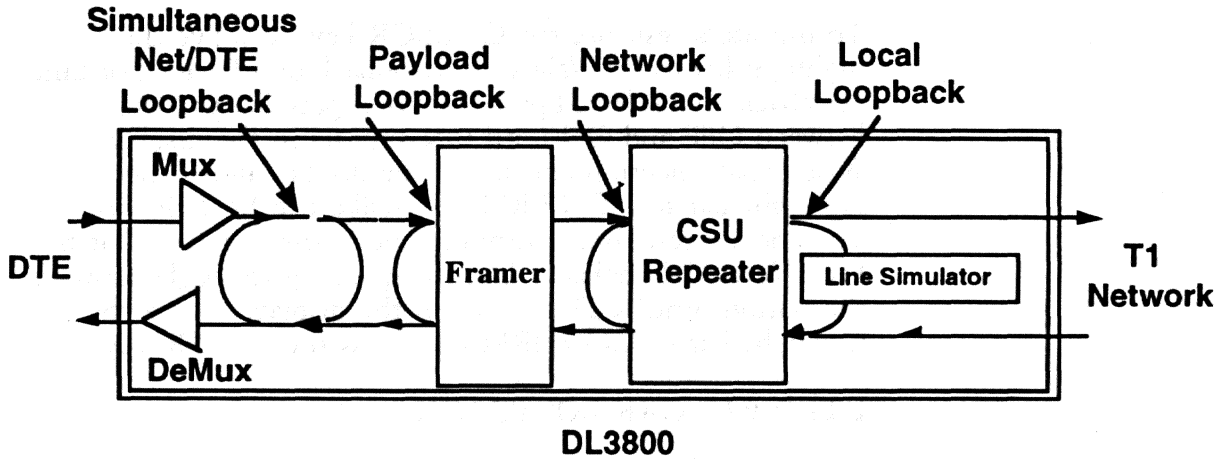

DL3800

4.3.8 MANUAL NETWORK RESTORATION

Through this menu, the user manually restores the individual T1 networks after they fail.

To access the MANUAL NETWORK RESTORATION menu, move the highlight bar to MANUAL NETWORK RESTORATION in the CONFIGURATION Menu and hit ENTER.

Figure 4.3.8 is an example of the MANUAL NETWORK RESTORATION menu.

MANUAL NETWORK RESTORATION MENU

```
Major          11/18/91  17:56:47      Unit:1      NET : 2     (33)
        Loss of Frame
Idled          11/18/91  17:56:58      Unit: 1     NET :2      (13)
        Loss of Frame Idled

DIGITAL LINK DL3800 SR XX  NODE 1:HOME  mm/dd/yy hh:mm:ss MN
SELECTED DEVICE ADDRESS: 1.00.000  NAME:HOME

   MANUAL NETWORK RESTORATION          Exit   Confirm
   PORT#          RESTORE
   1              No Change
   2              No Change
   3              No Change
   4              No Change
   5              No Change
   6              No Change
   7              No Change
   8              No Change
```

Figure 4.3.8

To manually restore a T1 port (network), use the up and down arrow keys to highlight the line item of the corresponding network port number. When No Change is highlighted across from the appropriate port, strike the ENTER key.

4.3.9 LOGOUT

This allows the user to manually logoff the unit, instead of waiting for the provisioned automatic logoff time for the unit to logoff automatically. Highlighting LOGOUT and striking ENTER logs the user off the system.

5 FRONT PANEL OPERATION

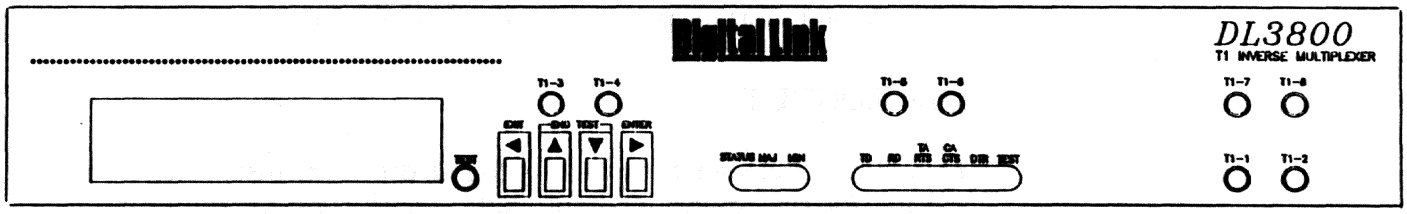

5.1 GENERAL

The front panel features a 16 character vacuum florescent display and 4 keys that help the user to move through the various menus to configure the unit, perform tests and obtain vital performance data. The front panel also features six LEDs for the DTE port, one for each of the T1 networks, three for the DL3800 status and one for network TEST.

5.1.1 Display Overview

The DL3800 has a 16 character fluorescent front panel display. The left most character often provides an indication when the displayed message relates to a remote unit. A remote unit message is indicated by the character R followed by a comma (R,). When displaying a message relating to the local unit, this character position is a blank.

5.1.2 Button Overview

The DL3800 has four front panel buttons. The unit generally responds to a button when it is pressed. Pressing and holding a button results in a repeating action after one-half second.

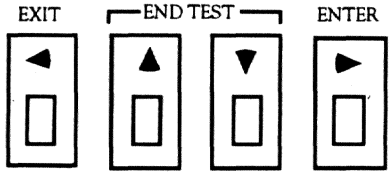

The front panel buttons are also used for Alarm Cutout. When an alarm condition occurs the External Alarm Output contacts close. This typically actuates external alarm indicators such as bells or alarm lights. Pressing any of the four front panel buttons clears the condition and turns off the external bell or light.

EXIT Button

The **EXIT** button is used to cancel operations or exit to a higher level menu loop from a sub-menu loop. This button doubles as a **LEFT ARROW** button in a few situations.

UP ARROW and DOWN ARROW Buttons

The **UP ARROW** button is used to move to the previous menu item or configuration option.

The **DOWN ARROW** button is used to move to the next menu item or configuration option.

Pressing both the **UP ARROW** and the **DOWN ARROW** keys simultaneously (the End Test combination), terminates all active tests on the local unit and brings the front panel menu to the Test Menu showing the test that has just been terminated. If no tests are active, pressing the End Test combination has no effect.

ENTER Button

The **ENTER** button is used to select a sub-menu loop or configuration option. This button doubles as the **RIGHT ARROW** button in a few situations.

5.1.3 Front Panel LEDs

Table 5.1.3 describes each of the LEDs on the DL3800 front panel.

INDICATION	DEFINITION

- **TEST (Test in Progress LED)**

Off	No tests are in progress
Solid Red	A test condition exists

DATA PORT LEDs

- **TD (Data DTE Activity LED, represents pulses from DTE)**

Green	Pulses are being detected
Off	No pulses are being detected

- **RD (Data DTE Activity LED, represents pulses to DTE)**

Green	Pulses are being detected
Off	No Pulses are being detected

- **RTS (Request to send indicator, from DTE)**

Yellow	RTS from DTE is active
Off	RTS has been removed

- **CTS (Clear to send indicator, to DTE)**

Yellow	CTS to DTE is active
Off	CTS has been removed indicating that the DL3800 Encore is not sending valid data

- **DTR (Data terminal ready indicator)**

Yellow	DTR from DTE is active.
Off	DTR from DTE is inactive.

- **DATA/TEST (Indicates the port is in a normal or test mode)**

  The DATA/TEST LED is a bicolor LED. It is off only when the port is not allocated bandwidth. Otherwise it is RED or GREEN. It is connected to the TEST lead going from the DL3800 to the DTE, so both the LED and the lead carry the same data.

NETWORK LEDs (T1-1 through T1-8)

Red	Network is in Red Alarm.
Green	Network is Active and running.
Flashing Green	Ready but not Active
Yellow	Network is in Loopback
Flashing Yellow	Receiving yellow/AIS alarm

Table 5.1.3

UNIT LEDs

These three LEDs (Status, Maj and Min) display the status of the DL3800 and whether the condition is a Major or Minor alarm.

Table 5.1.3

5.1.4 Access Levels and Protected Mode

Front panel access can be limited by placing the DL3800 in the Protected Mode. In this mode, the user can use the Front Panel User Interface only to monitor the status of the unit and its Error Counters and view its configuration. The following operations cannot be performed through the Front Panel User Interface when the unit is in Protect Mode:

- Clearing the Error Counters.
- Changing the unit configuration.
- Starting or terminating diagnostic tests.

The unit can be put into and out of the Protected Mode through the Terminal User Interface but not from the Front Panel User Interface. When a user needs to take a unit out of Protected Mode but a terminal is not available, the following procedure can be used:

a. Turn off the power to the unit.
b. Turn the power to the unit back on.
c. Within the first 60 seconds after turning the power on, perform a Unit Self Test from the Front Panel User Interface.

This procedure takes the unit out of the Protected Mode (and clears any password that may have been programmed into the unit). To allow the user to perform this procedure when the unit is in protected mode, the Protected Mode is ignored in the first sixty seconds after powering the unit up. When in Protected Mode, the Test Menu does not appear in the Main Menu as a choice.

5.1.5 Power Up and Reset

During power up initialization, the unit performs self test and displays a self-test message. Payload service resumes at the completion of Self Test. When the error message is removed the default message **DL3800 Inverse Multiplexer** appears on the display.

5.2 TOP MENU

The menu system in the DL3800 is consistent with other Digital Link Products. Therefore a user familiar with an existing product can easily operate the DL3800. An example of a menu tree is shown below:

The Top Menu loop consists of five items: (1) DL3800 Inverse Multiplexer designation, (2) Select Remote/Local, (3) Monitor Menu, (4) Test Menu, and (5) Configuration Menu.

DL3800 TOP LEVEL MENU

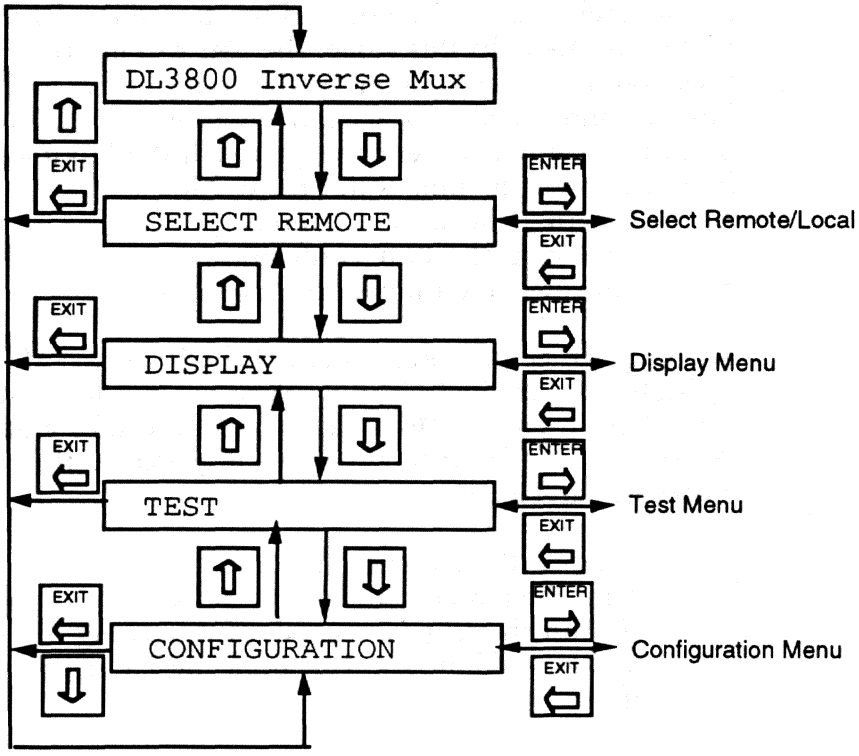

This menu loop may also be entered at any time by pressing the **EXIT** button to go up the menu hierarchy until reaching the Top Menu. Continuing to press the **EXIT** button while in the Top Menu brings the unit to the default display **DL3800 INVERSE MULTIPLEXER** scrolling across the screen. Pressing the up and down arrows get the user into the menu loop. A menu is selected by pressing the **ENTER** button when the menu name appears on the display.

The Display Menu is used for displaying Node Status, DTE Status and Status of each installed T1 network. The 24 hour line data is only available with the terminal interface or through the Network Manager. The data in the Display menu is a subset of the parameters that are available on the Alarm and Status Menu through the terminal interface or the Network Manager.

The Test Menu is used to DTE and Network loopbacks. The DL3800 does not allow performing tests on the remote unit through the front panel user interface. This feature is only available with the terminal interface.

The Configuration Menu is used to view and change the unit's configuration parameters, date and time, network interface parameters and DTE interface parameters.

Both the Monitor and Configuration Menus are also able to access the remote unit. Remote monitoring and configuration are only available when there is an ADL (*Application Data Link*) channel to the remote unit. When the user requests status or configuration information from the remote unit, the local unit sends a request to the remote unit over ADL and waits for a reply. While waiting for the reply, the local unit displays the message:

PLEASE WAIT...

On the front panel. If there is no reply from the remote unit within 10 seconds, the display of the local unit will show:

REMOTE NOT AVAILABLE

Otherwise, the information reported by the remote unit will be displayed.

5.2.1 SELECT REMOTE/SELECT LOCAL

Striking the DOWN ARROW cursor key when the default message is in the display brings the message SELECT REMOTE or R, SELECT LOCAL to the display. This allows the user to log onto either the local or remote DL3800.

When logged onto the local unit, the display will read SELECT REMOTE. When logged onto the remote unit, the display will read R,SELECT LOCAL. To change the DL3800 being monitored and controlled, strike the ENTER key. The message in the display will start "blinking." Strike the ENTER key once again to change from SELECT REMOTE to R,SELECT LOCAL or visa versa.

Note: When logged onto the remote unit, an "R," will appear as the first two characters in the display. For example:

R,DTE1 STATISTICS

5.3 DISPLAY MENU

The DISPLAY Menu is used for displaying Node status, DTE status and the status of each installed T1 line. I t is also used to clear the error counters (Clearing the error counters can only be done when the DL3800 is not in the Protected Mode). Remote information is only available in ESF mode when there is a FDL channel to the remote.

DISPLAY MENU

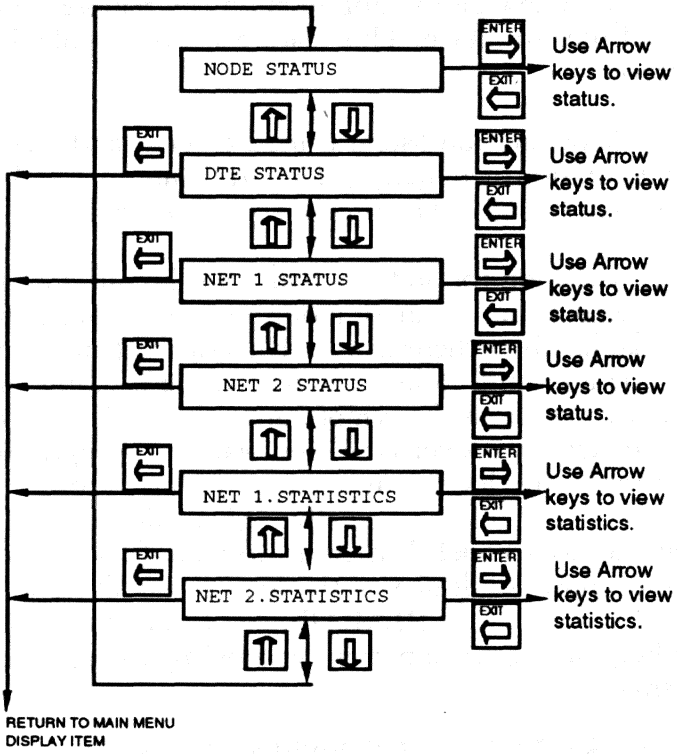

Note: Only those T1 circuits physically installed (from two to eight) will have status lines in this menu.

5.3.1 NODE (COMMON EQUIPMENT) STATUS

This display shows the status of the unit. NODE STATUS is accessed from the DISPLAY Menu by striking ENTER when NODE STATUS appears in the display. If the unit is operating properly, this message will appear: NODE STATUS OK

If one of more errors are detected, one or more of the following messages will appear. Use the DOWN and UP arrow buttons to view the following messages:

See Page 14 of this Users Manual for a list of those Common Equipment Alarm and Status items that could appear in this menu.

5.3.2 DTE STATUS

The next display shows the status of the DTE data port. The Menu is accessed by striking ENTER when DTE STATUS appears in the display.

If the DTE is functioning properly, the following message will appear: **DTE STATUS OK**. If errors are detected, one or more of the following messages will appear. Use the DOWN and UP arrow buttons to view further messages.

See Page 14 of this Users Manual for a list of those Common Equipment Alarm and Status items that could appear in this menu.

5.3.3 NET (1-8) STATUS

The next eight displays show the status of the T1 Networks (NET 1 STATUS through NET 8 STATUS if all are installed). Use the Up and Down arrows to select the T1 Network to be monitored and hit the ENTER button. Use the Up and Down arrow to view further status items relating to the same T1 circuit.

See Page 14 of this Users Manual for a list of those Common Equipment Alarm and Status items that could appear.

5.3.4 NET (1 through 8) STATISTICS

The Menu provides the user with the various performance statistics of the individual T1 circuits. To view the statistics of a particular T1 circuit, strike the ENTER key when the display reads **NET N.STATISTICS**, where "N" is the number of the desired T1 network port.

The display will then read **NET N CV**, where, once again, "N" is the number of the T1 network port being monitored.

Striking the ENTER key will then start the user through the CODE VIOLATIONS performance report for that T1 network. The first display will read **SEC. 455 VALID.8**, showing the number of seconds in the current interval and the number of valid 15 second intervals since the error counters were last reset.

Striking the Down Arrow button from this point in the menu will show the number of Code Violations in the current interval (**CUR 4**). Striking the Down Arrow once again will display the total number of errors since the registers were last reset (**TOTL. 8**)

Using the Down Arrow from here will cycle the user through the last 96 15-minute intervals (or however many intervals exist since the counters were last reset) displaying the number of Code Violations in each interval, starting with the most recent, i.e., **1 = 0.**

Following, in the order they appear, in the NET STATISTICS items.

CV A CODE VIOLATION (CV) is a count of Frame synchronization bit errors (FE) in the Super Frame (SF) format, or a count of the CRC-6 errors in the Extended Super Frame (ESF) format occurring during the accumulation period.

ES An ERRORED SECOND (ES), in the case of ESF, is the count of one-second intervals containing one or more CRC-6 errors, or one or more CS events, or one or more SEF events. In the case of SF, this parameter is a count of one-second intervals containing one or more SEF events, or one or more CS events.

ES-A In ESF format only, this is the count of one-second intervals with exactly one CRC-6, no SEF and no CS events.

ES-B In ESF format only, this is a count of one-second intervals with no less that 2 and not more that 319 CRC-6 errors, no SEF events and no CS events.

SES In ESF format, Severely Errored Seconds are defined as a count of one-second intervals with 320 or more CRC-6 errors, or an SEF defect. In SF, it is the count of one-second intervals with eight or more FE events or an SEF defect.

SAS In ESF only, this parameter is the count of one-second intervals containing one or more SEF defects or one or more AIS (Alarm indication Signal) defects.

AISS This parameter is a count of one-second intervals containing one or more AIS defects.

UAS This is a count of one-second intervals in which the DS1 path has been unavailable. The DS1 path is determined to be unavailable from the onset of 10 contiguous SESs, or the onset of the condition leading to a failure.

CSS The Controlled Slip Second is a count of one-second intervals containing one or more controlled slips.

OOF This is the number of seconds that the signal has been out of frame during the accumulation period. This counter is suppressed during an LOS (loss of signal) condition. A total of 80 OOFs in a 10-second sliding window (approximately 10^{-3}) will create a major alarm and 5 OOFs in a 600 second sliding window (approximately 10^{-6}) will create a minor alarm.

TABLE 5.3.3

BPV This display provides the number of Bipolar Violations (BPVs) that have occurred during the accumulation period. A total of 15430 BPVs in a 10-second sliding window (approximately 10^{-3}) will create a major alarms and 5 BPVs in a 600 second sliding window (approximately 10^{-6}) will create a minor alarm.

FE This display provides a count of the number of seconds containing FRAMING BITS that have been in error during the accumulation period.

TABLE 5.3.3

Following the FE errors in the Menu, the next items displays the ERROR FREE SECONDS for that particular T1 network port **(NET N EFS).** Striking the ENTER key when this is in the display will display the actual Error Free Seconds percentage for that network port **(EFS 99.6 PERCENT).**

The final item in the NET STATISTICS menu **(NET N CLR STAT)** allows the user to clear all the statistic counters for that particular network port. To clear the statistics, hit the ENTER button when **NET N CLR STAT** appears in the display window.

5.4 TEST MENU

The Test Menu is used to activate network loopbacks and DTE loopbacks. The Test Menu is only available when the unit is not in the Protected Mode. In Protected Mode, this menu is not included in the Top Menu loop. Tests are performed by selecting a test from the Test Menu or one of the Test sub-menus and pressing **ENTER**. To end all tests, press the **END TEST** key combination (UP and DOWN arrow simultaneously). When a test is selected that could apply to a T1 port, the user is asked to specify to which fraction the test should apply. Only the local unit can be tested from the front panel. Testing the remote unit is limited to placing it in the Network Loopback Test.

The TEST Menu is broken down into two types of sub-menus: DTE TESTS (one menu) and NETWORK TESTS (one for each network interface installed). . Through these submenus, the user initiates and stops various tests and loopbacks.

The TEST Menu is accessed from the Main Menu by striking ENTER when TEST appears in the display. Striking the DOWN or UP ARROW toggles through the three sub-menus. The submenus are accessed by striking ENTER when the appropriate men appears in the display.

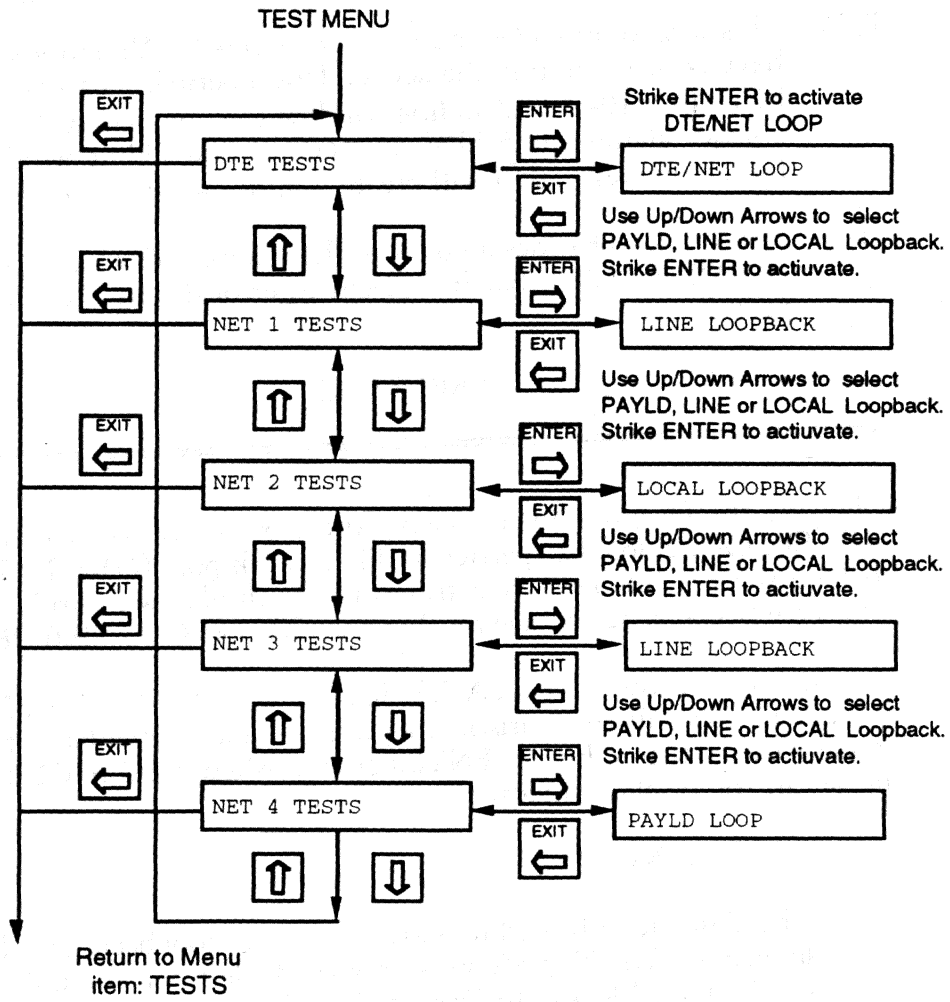

Note: A menu item will appear only for those T1 network interfaces installed.

5.4.1 DTE TESTS

Only one loopback can be initiated through the DTE TESTS Menu, a bi-directional DTE/NET LOOPBACK.

To access the DTE TESTS Menu from the TEST Menu, strike ENTER when DTE TESTS appears in the display.

When in the DTE TEST Menu, striking the ENTER accesses the DTE/NET LOOPBACK.

5.4.1.1 DTE/NET LOOPBACK

The DTE/NET LOOPBACK is a bi-directional loopback that loops the received DTE signal back to the DTE and the signal from the T1 Main Board back towards the T1Main Board. This loopback is used to verify the operation of the DTE and associated cabling, the DTE Board and the link between the DTE Board and the T1 Main Board.

To initiate a DTE/NET LOOP from the DL3800 front panel, strike ENTER when DTE/NET LOOP appears in the display.

When a DTE/DTE LOOP is in operation, a "plus sign" will appear after the words DTE/NET LOOP in the display.

DTE/NET LOOP +

To end the loopback, strike ENTER again while still in the DTE/NET LOOPBACK menu.

NOTE: To cancel a test or loopback from any place in the Menu by striking the UP ARROW and DOWN ARROW at the same time. However, this will cancel all tests and loopbacks currently in progress.

Only one test can be performed at a time. To start a new test the previous test must first be terminated.

While a test is active and the user is in the Test Menu, the **UP ARROW** and the **DOWN ARROW** keys are disabled and the user can only view the name of the test that is currently active. The user can use the **EXIT** key to go out of the Test Menu and then, using the other keys, go into the Monitor or the Configuration Menus to view the performance information or view and change the configuration of the unit while the test is in progress.

While the test is active, the front panel TEST LED is on, reminding the user that the unit is out of normal service condition.
The test is terminated by pressing the END TEST key combination at any point in the menus. When this combination is pressed, the currently active test is canceled and the front panel display returns to the Test Menu to the test that was just terminated.

5.4.2 NETWORK TESTS (1 through 8)

Three NETWORK TESTS can be performed through this Menu, a PAYLOAD (PAYLD) LOOPBACK, a LINE LOOPBACK and a LOCAL LOOPBACK. To access NETWORK TESTS Menu from the TEST Menu, strike ENTER when NETWORK TESTS menu for a particular T1 circuit (NET 1 through NET 8) appears in the display.

When in the particular NETWORK TEST Menu, striking the UP ARROW or DOWN ARROW toggles between the three options, PAYLD, LINE and LOCAL LOOPBACK.

5.4.2.1 PAYLOAD LOOPBACK

The PAYLOAD LOOPBACK on the DL3800 is used to verify the proper operation of the T1 network and the DL3800.

To initiate a PAYLOAD LOOPBACK from the DL3800, strike ENTER when PAYLD LOOPBACK appears in the display for the T1 (NET 1 through NET 8) line to be looped back.

When a PAYLOAD LOOPBACK is in operation, a "plus sign" will appear after the words PAYLD LOOPBACK in the display.

PAYLD LOOPBACK +

When the loopback is terminated, the "plus sign" disappears.

To end the loopback, strike ENTER again while still in the PAYLD LOOPBACK menu.

5.4.2.2 LINE LOOPBACK

The network loopback is used to verify the operation of the particulary T1 network (T1 through T8). The network loopback loops the data received from the T1 network back towards the network. The data is

regenerated prior to being looped back, however, no additional processing of the data is performed by the DL3800. This minimizes the impact of the DL3800 during this test so that the problems can be isolated.

To initiate a LINE LOOPBACK from the DL3800, strike the ENTER key when LINE LOOPBACK appears in the display.

When a LINE LOOPBACK is in operation, a "plus sign" will appear after the words LINE LOOPBACK in the display as shown below:

LINE LOOPBACK +

To end the loopback, strike ENTER again while still in the LINE LOOPBACK menu. When the loopback is terminated, the "plus sign" disappears.

5.4.2.3 LOCAL LOOPBACK

The local loopback is used to verify the operation of the particulary T1 network (T1 through T8). The network loopback loops the data received from the T1 network back towards the DTE. The data is regenerated prior to being looped back, however, no additional processing of the data is performed by the DL3800. This minimizes the impact of the DL3800 during this test so that the problems can be isolated.

To initiate a LOCAL LOOPBACK from the DL3800, strike the ENTER key when LOCAL LOOPBACK appears in the display.

When a LOCAL LOOPBACK is in operation, a "plus sign" will appear after the words LOCAL LOOPBACK in the display as shown below:

LOCAL LOOPBACK +

To end the loopback, strike ENTER again while still in the LOCAL LOOPBACK menu. When the loopback is terminated, the "plus sign" disappears.

NOTE: You can cancel a test or loopback from any place in the Menu by striking the UP ARROW and DOWN ARROW at the same time. However, this will cancel all tests and loopbacks currently in progress.

5.5 CONFIGURATION MENU

The Configuration Menu is used to Backup the database and to view and change the unit and comm port configuration parameters, network interface parameters and DTE interface parameters. The remote unit configuration may also be viewed and changed.

The DL3800 configuration can only be changed when the unit is not in the Protected Mode. In Protected Mode the configuration can only be viewed but not changed.

To use the Configuration Menu, the user selects the configuration sub-menu from a hierarchical list and presses the **ENTER** key. The user then proceeds through the hierarchical menu structure to view or change the chosen parameters. When the user is done using the Configuration Menu, the **EXIT** key is used.

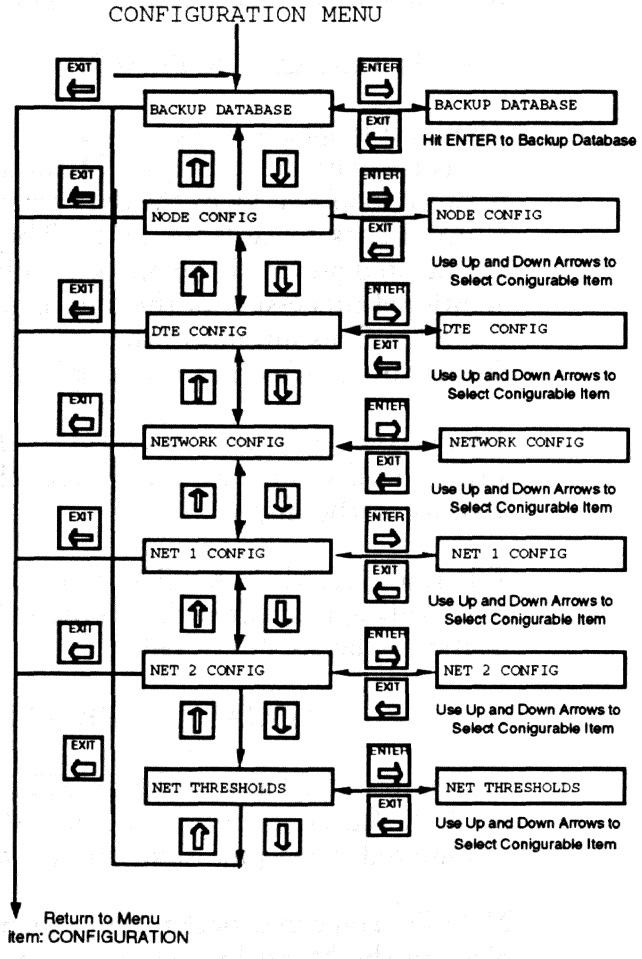

The NODE CONFIG menu is used to set the unit's ID, date, time, and communications port. It also shows the user the Hardware and Software versions.

The **BACKUP DATABASE** is used to manually backup the database to EEPROM.

The **DTE CONFIG** Menus is used to set the line mode for the DTE DATA port. It is also used to define whether the DTE signal is defined missing when the DTR line, the RTS line is not asserted or neither. Other options include DTE/DCE mode, V.35/RS449 and clocking option (SCTE/SCT NORMAL or SCT INVERT).

The **NETWORK CONFIG** menu is used to set the operating mode (Inverse Mux or Single Line DSU) and clocking options of that are common to all T1 Network Ports.

The **NET N CONFIG** menu is used to set various configurable items that are unique to each individual T1 Network Port, including FRAMING FORMAT, LINE CODE, ALARM REPORTING, AUTO-RESTORE and EQUALIZATION.

The **NET THRESHOLDS** Menu allows the user to enable/disable and set the values of the various Network Alarm Thresholds which, when exceeded, will cause the T1 lines to automatically be taken out of service.

5.5.1 NODE CONFIGURATION

The NODE CONFIG Menu allows the user to configure the NODE ID, NODE NUMBER, DATE & TIME and *NODE COMM PORT (Terminal). It also displays the NODE HW REV and the SOFTWARE REV, which are set by the factory

***Note: Only the terminal comm port can be set through the front panel. The network management port is set through the ASCII terminal.**

The NODE CONFIG menu is accessed through the CONFIGURATION Main Menu by striking ENTER when NODE CONFIG appears on the display. Striking the DOWN ARROW or UP ARROW toggles through the sub-menus.

Striking ENTER when a selection is in the display allows the user to view the present configuration. Striking ENTER again will cause the entry to start "blinking" and allows the user to change the selection if desired.

To change the selection, use the DOWN ARROW and UP ARROW keys to toggle through the choices. Striking ENTER selects the option that's in the display as the configuration.

In the case of changing names and numbers, only one number or letter will "blink" at a time. Only that number or letter can

be changed. After each letter or number is selected, press ENTER to confirm each change. The next letter or number space will then begin "blinking" and be available for change. To abort any change, hit EXIT before you strike ENTER.

NODE CONFIGURATION Menu

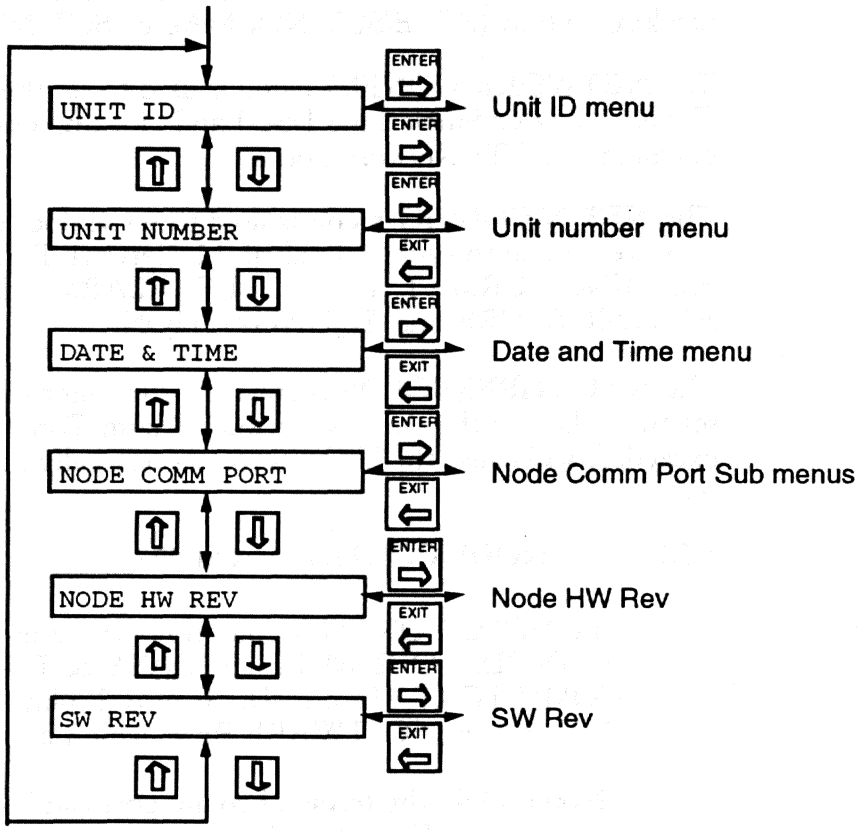

The Node Configuration Menu is used to configure various parameters of the DL3800, including:

UNIT ID - The UNIT ID is an alpha-numeric designation up to 16 characters in length. The unit is shipped without a UNIT ID.

To access UNIT ID from the NODE CONFIGURATION Menu, strike ENTER when UNIT ID appears in the display. Strike ENTER again and the first space or letter will begin "blinking." Use the UP and DOWN ARROWS to select the desired letter or number. Strike ENTER again to confirm the selection, and move on to the next letter or number.

UNIT NUMBER - The UNIT NUMBER is a four-digit number. The unit is shipped from the factory without a number.

To access UNIT NUMBER, strike ENTER when UNIT NUMBER appears in the display. To enter or change the UNIT NUMBER, follow the same steps as in entering the UNIT ID (Section 6.4.6.1.1).

DATE & TIME - The DATE & TIME are set at the factory, on Pacific Region Time. They appear in the display as:

NOV 07, 1992 09:44:49

The DATE & TIME can be changed in the same manner as described in Section 6.4.5.1.

NODE COMM PORT - The following communications port parameters can be set through this display; BAUD RATE, PARITY, DATA BITS, STOP BITS, FLOW CONTROL and MULTIDROP MODE.

BAUD RATE - The BAUD RATE menu is accessed through the NODE COMM PORT menu. When the menu is first displayed, it will show the present BAUD RATE: 38,400, 19,200, 9600, 4800, 2400, 1200, 600 or 300.

PARITY - The PARITY menu is accessed through the NODE COMM PORT menu. When the menu is first displayed, it will show the present PARITY; either NO, ODD or EVEN.

DATA BITS - The DATA BITS menu is accessed through the NODE COMM PORT menu. When the menu is first displayed, it will show the present DATA BITS configuration; either 7 or 8.

STOP BITS - The STOP BITS menu is accessed through the NODE COMM PORT menu. When the menu is first displayed, it will show the present STOP BITS configuration; either 1, 1.5 or 2. .

LOCAL TERMINAL XON/XOFF - With the Flow Control feature ON, the terminal can request that the DT quit sending data when its buffers are full. The choices are USE or IGNORE XON/XOFF.

TERMINAL MULTIDROP - If the local terminal is connected to more than one DL3800, it must be in MULTIDROP MODE. If it is connected to only one unit, this feature can be disabled. When it is disabled, the system comes up directly, without the user having to log in. The choices are MULTIDROP MODE and DIRECT TERMNAL.

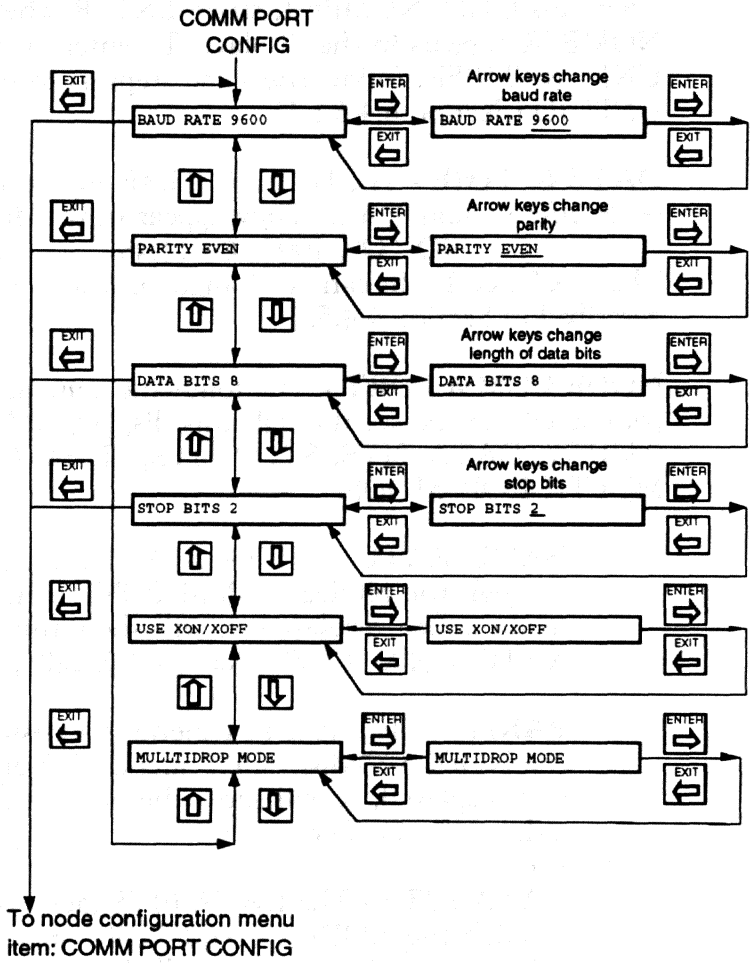

NODE HW REV - The NODE HW (HARDWARE) REV is set by the factory and cannot be changed.

SW REV - The NODE SW (SOFTWARE) REV is set at the factory and cannot be changed.

5.5.2 DTE CONFIGURATION MENU

This menu allows the user to set various configurable items for the DTE port.

For each item on this menu, pressing the **ENTER** key causes the configurable item to start flashing. Pressing the **UP ARROW** and **DOWN ARROW** keys changes the value of the flashing item. Pressing the **ENTER** key again terminates the configuration of that item. Pressing the **EXIT** key aborts the operation without making the change.Each of the Configurable items are described in detail in section 4.3.5.4 of this Users Manual.

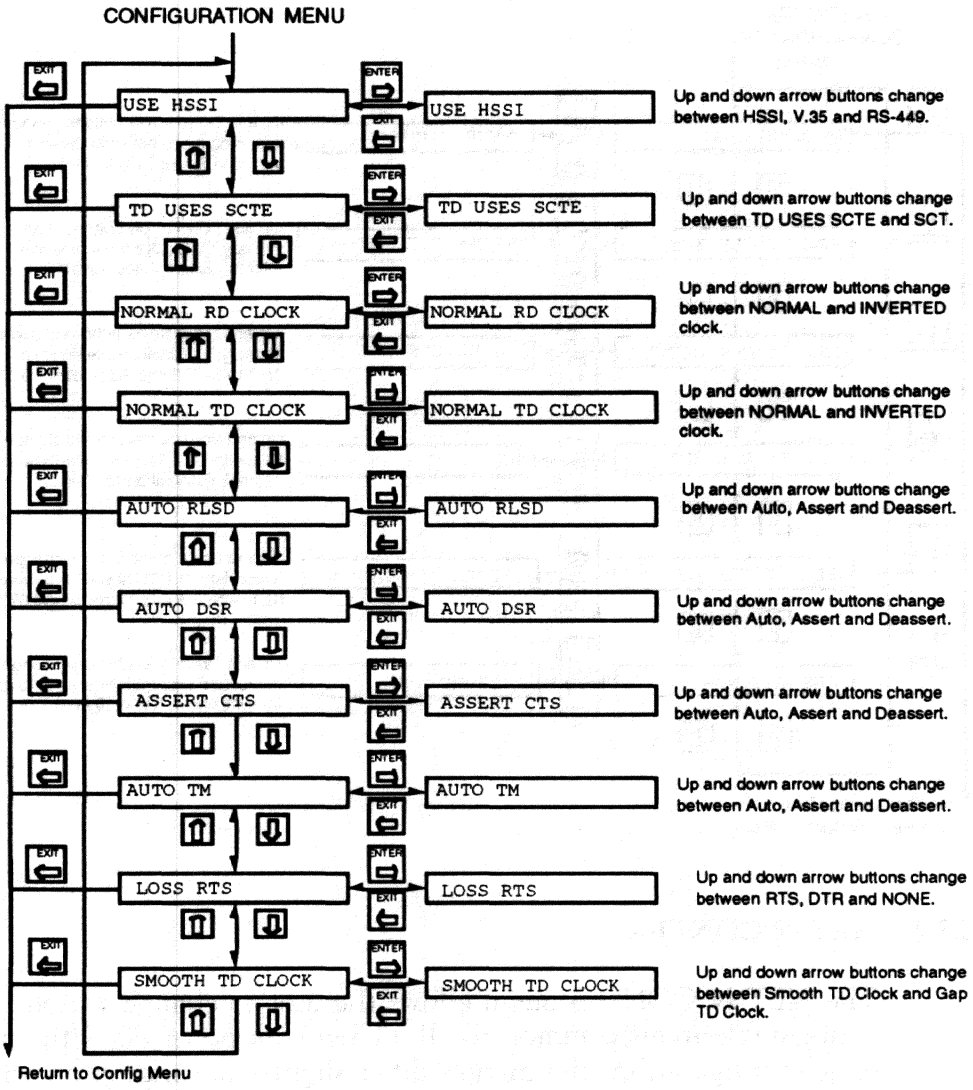

5.5.3 NETWORK CONFIG

The NETWORK CONFIG menu allows the user to change various configurable items common to all T1 network ports.For each item on this menu, pressing the **ENTER** key causes the configurable item to start flashing. Pressing the **UP ARROW** and **DOWN ARROW** keys changes the value of the flashing item. Pressing the **ENTER** key again terminates the configuration of that item. Pressing the **EXIT** key aborts the operation without making the change.
Each of the Configurable items are described, along with the various options, in detail in section 4.3.5.3 of this Users Manual.

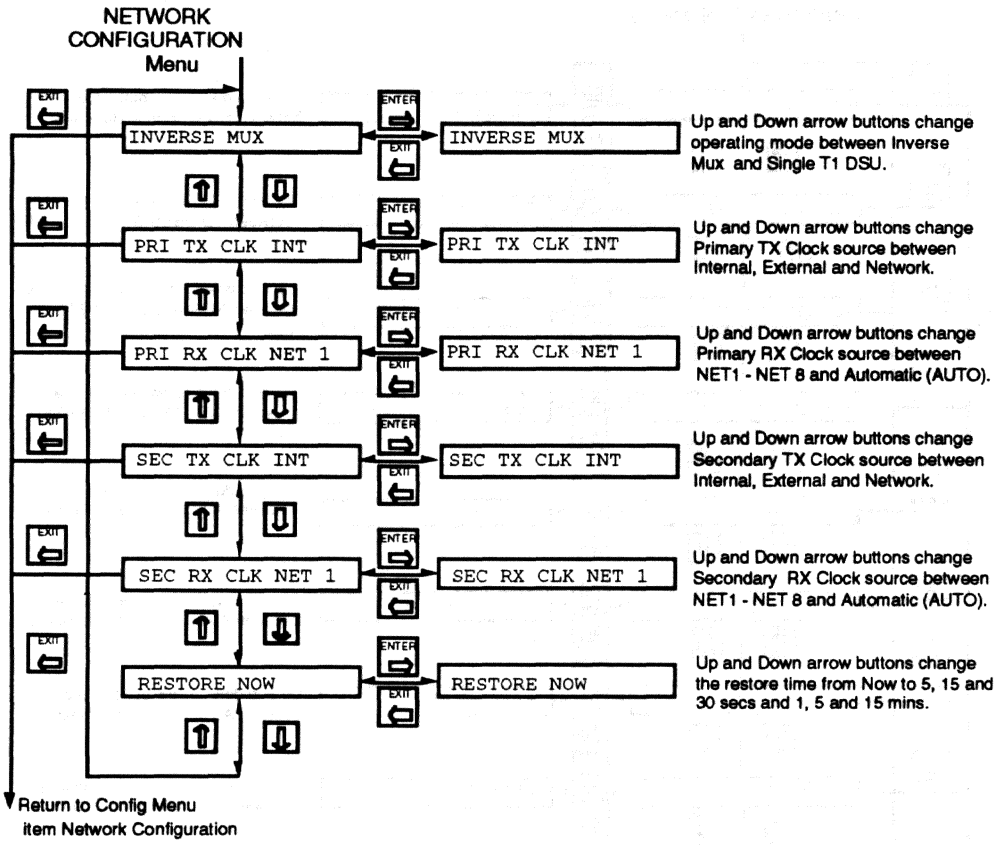

5.5.4 NET N CONFIG

The NET *N* CONFIG menu allows the user to change various configurable items common to all T1 network ports. As with the front panel configuration, the menu's differ slightly depending on whethe the unit is configured for DTE or CSU operation. The two menus are shown in the following two figures.

For each item on this menu, pressing the **ENTER** key causes the configurable item to start flashing. Pressing the **UP ARROW** and **DOWN ARROW** keys changes the value of the flashing item. Pressing the **ENTER** key again terminates the configuration of that item. Pressing the **EXIT** key aborts the operation without making the change.Each of the Configurable items are described in detail in section 4.3.5.3 of this Users Manual.

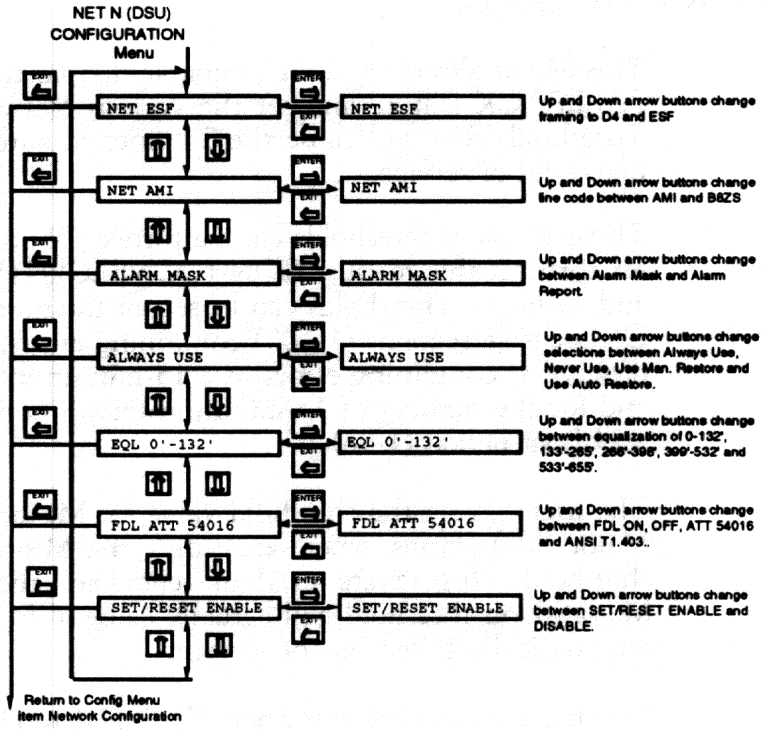
NET N (DSU)
CONFIGURATION
Menu
NET ESF
NET AMI
ALARM MASK
ALWAYS USE
EQL 0'-132'
FDL ATT 54016
SET/RESET ENABLE
Up and Down arrow buttons change framing to D4 and ESF
Up and Down arrow buttons change line code between AMI and B8ZS
Up and Down arrow buttons change between Alarm Mask and Alarm Report.
Up and Down arrow buttons change selections between Always Use, Never Use, Use Man. Restore and Use Auto Restore.
Up and Down arrow buttons change between equalization of 0-132', 133'-265', 266'-398', 399'-532' and 533'-655'.
Up and Down arrow buttons change between FDL ON, OFF, ATT 54016 and ANSI T1.403..
Up and Down arrow buttons change between SET/RESET ENABLE and DISABLE.
Return to Config Menu
item Network Configuration

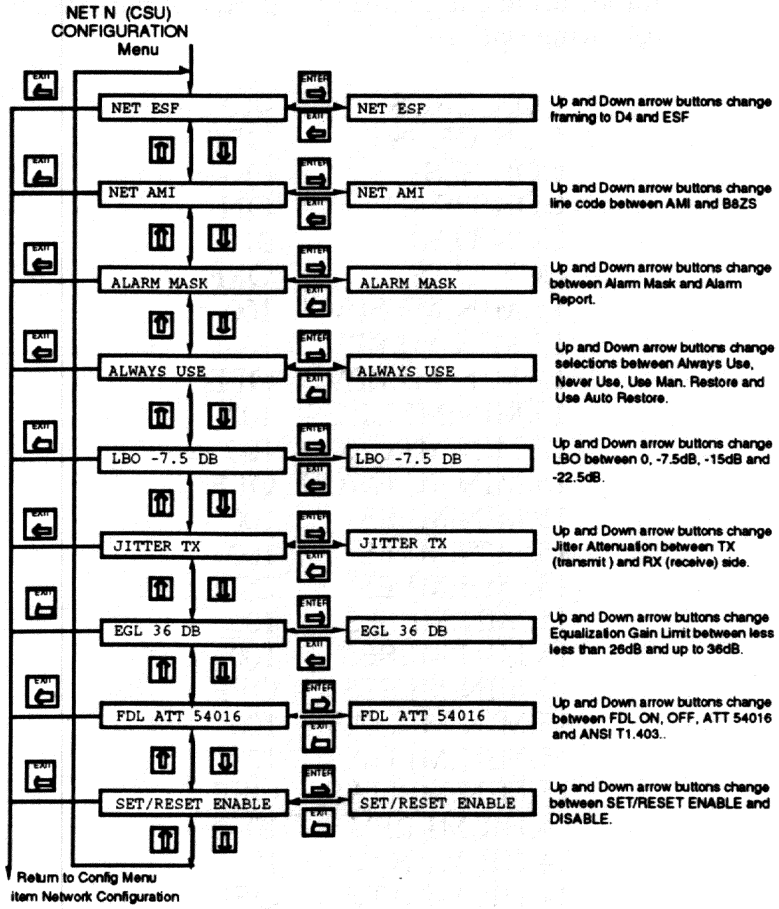
NET N (CSU)
CONFIGURATION
Menu
NET ESF
NET AMI
ALARM MASK
ALWAYS USE
LBO -7.5 DB
JITTER TX
EGL 36 DB
FDL ATT 54016
SET/RESET ENABLE
Up and Down arrow buttons change framing to D4 and ESF
Up and Down arrow buttons change line code between AMI and B8ZS
Up and Down arrow buttons change between Alarm Mask and Alarm Report.
Up and Down arrow buttons change selections between Always Use, Never Use, Use Man. Restore and Use Auto Restore.
Up and Down arrow buttons change LBO between 0, -7.5dB, -15dB and -22.5dB.
Up and Down arrow buttons change Jitter Attenuation between TX (transmit) and RX (receive) side.
Up and Down arrow buttons change Equalization Gain Limit between less less than 26dB and up to 36dB.
Up and Down arrow buttons change between FDL ON, OFF, ATT 54016 and ANSI T1.403..
Up and Down arrow buttons change between SET/RESET ENABLE and DISABLE.
Return to Config Menu
item Network Configuration

5.5.5 NETWORK THRESHOLDS

This Menu allows the user to enable/disable the automatic FALLBACK feature and set the various Network Alarm Thresholds that will cause the T1 lines to automatically be taken out of service.

Three levels of thresholds can be turned ON or OFF and values set through this menu; CON (CONSECUTIVE), 15-minute and 24-hour. Thresholds can be set for the number of Consecutive seconds (1-100) containing errors, for the number of seconds containing errors in a 15-minute interval (1-900) and for the number of 15-minute intervals containing errors in a 24-hour period (1-96).

The user can set the threshold value for Minor (MI) and Major (MJ) alarms, where exceeding the Minor alarm threshold will generate an alarm report and the exceeding a Major alarm threshold will actually cause a T1 line to be automatically taken out of service.

Striking the ENTER key when NET THRESHOLDS appears in the display screen will start the menu and allow the user to scroll, using the Down or Up Arrow buttons, through the following options:

CON CRCS	010
CON CRCS	OFF
CON SES	010
CONSES	ON
CON UAS	015
CON UAS	OFF
15.MIN.MI.BPV	100
15.MIN.MJ.BPV	100
15.MIN.MJ.BPV	OFF
15.MIN.MI.CRCS	100
15.MIN.MJ.CRCS	100
15.MIN.MJ.CRCS	OFF
15.MIN.MI.ES	100
15.MIN.MJ.ES	100
15.MIN.MJ.ES	OFF
15.MIN.MI.SES	100
15.MIN.MJ.SES	100
15.MIN.MJ.SES	OFF
15.MIN.MI.UAS	100
15.MIN.MJ.UAS	100
15.MIN.MJ.UAS	OFF
24.HR.MI.BPV	10
24.HR.MJ.BPV	10
24.HR.MJ.BPV	OFF

24.HR.MI.CRCS	10
24.HR.MJ.CRCS	10
24.HR.MJ.CRCS	OFF
24.HR.MI.ES	10
24.HR.MJ.ES	10
24.HR.MJ.ES	OFF
24.HR.MI.SES	10
24.HR.MJ.SES	10
24.HR.MJ.SES	OFF
24.HR.MI.UAS	10
24.HR.MJ.UAS	10
24.HR.MJ.UAS	OFF

To turn a Major Alarm ON or OFF, use the Up and Down arrows to get the particular alarm in the display window and hit ENTER. Using the arrow keys, select ON or OFF. To change the value of an alarm threshold, use the Up and Down arrow keys to get that particular alarm in the display window and strike ENTER. Use the Up and Down arrow keys to raise or lower the present value.

6 INSTALLATION

6.1 INSTALLATION PROCEDURE

NOTE

Before beginning the installation process, inspect the DL3800 for damage which may have occurred during shipment. If damage has occurred, notify Digital Link and your package carrier immediately.

DL3800 INSTALLATION PROCEDURE

STEP	REFERENCE

1. Unpack and inspect the DL3800 for damage that might have occurred during shipment. If necessary, wipe off the exterior with a soft cloth. Save all packing slips and papers that come with the unit. Save the shipping cartons and packing materials until installation is complete and proper operation is verified.

2. Verify that all items ordered are included in the shipment. The shipment should consist of the following:

   * DL3800 Digital Inverse Multiplexer
   * DL3800 Users Manual.
   * Appropriate data and network interface cables and connectors (if ordered).
   * Power cord

DL3800 INSTALLATION PROCEDURE, continued

STEP		REFERENCE
3.	Mount the DL3800	See section 6.2
4.	Connect Power Cables and Connections	See section 6.3.1
5.	Network/DTE Cables & Connections	See section 6.3.2
	Connect network cables to DL3800	See section 6.3.2
	Connect DTE cable to DL3800	See section 6.3.3
6.	ASCII Terminal and SNMP Connection	See section 6.3.4
7.	Configure Unit	See section 4.3.5.1 (ASCII terminal)
8.	Configure Comm Ports	
	Terminal Port	See Section 4.3.5.1 (ASCII terminal)
	Network Management Port	See Section 4.3.5 1 (ASCII terminal)
9.	Configure Network	See section 4.3.5.2 (ASCII terminal)
10.	Configure DTE	See section 4.4.2 (ASCII terminal)

6.2 MOUNTING THE DL3800

6.2.1 RACK MOUNTING

A 19-inch rack mounting kit is available from Digital Link. Attach the appropriate rack mounting ears to the DL3800 using the hardware included in the kit.

6.2.2 DESK OPERATION AND STACKING

Four stick-on rubber feet are supplied with each DL3800 Digital Service Interface. When desktop operation is to be used, remove the covering from each rubber foot and stick them onto the bottom of the DL3800. The DL3800 units may now be stacked as required.

6.3 CABLING AND CONNECTORS

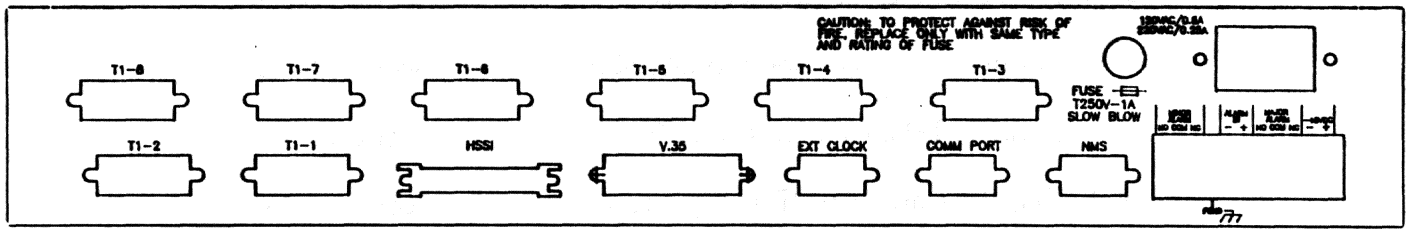

6.3.1 POWER CABLES AND CONNECTIONS

6.3.1.1 AC Power Connection

An AC power cord is supplied with the DL3800 to provide 120 Vac to 240 Vac power. The power cord receptacle is located on the rear panel of the DL3800. For AC power, connect the AC power cord to the DL3800 and plug into the nearest AC outlet.

6.3.1.2 DC Power Connection

The Digital Link DL3800 Digital Inverse Multiplexer can be optionally powered by -48 Vdc power source. The DC power connection on the DL3800 is located on the backpanel. There are eight screw terminals located on the rear panel The two screw terminals on the far right (looking at the rear panel) are for DC powering.

Connect the -48V wire to the screw terminal labeled "-". Attach the ground wire to the screw terminal to the immediate right, labeled "+".

The DL3800 is designed to operate with NEGATIVE SUPPLY. This means the POSITIVE TERMINAL is connected to the ground.

WARNING: Damage to the DL3800 may result is power is connected improperly.

6.3.2 T1 NETWORK CONNECTION

Eight female DB-15 connectors are located on the DL3800 back panel for connecting to the T1 networks.

WECO 728A or equivalent cable is used to connect the DL3800 to each T1 Network. Connect the DL3800 to each T1 Network using the appropriate cable and connectors, available from Digital Link.

6.3.3 DTE CABLE AND CONNECTION

The DTE interface connectors are provided on the back of the DL3800, a 50-pin SCSI female receptacle for HSSI compatible DTE and a 25DB-pin female connector for V.35 compatible DTE.

If using a HSSI interface, the cable connecting the DL3800 to the DTE consists of 25 twisted pairs with an overall foil/braid shield. Both ends of the cable should have male connectors. The DL3800 and the DTE have female receptacles.

One 50-pin SCSI female receptacle is provided on the rear of the DL3800 to connect the DL3800 to HSSI-based networks/systems. Cables and connectors are available from Digital Link.

Using the appropriate cable and connectors, connect the DL3800 HSSI connector to the HSSI DTE.

If using a V.35 interface, use a shielded cable supplied by Digital Link to connect the DL3800 to the DTE.

One 25DB-pin female connector is provided on the back of the DL3800 to connect the DL3800 to the V.35 compatible DTE.

Using the appropriate cable and connectors, connect the V.35 DTE device to the DL3800.

6.3.4 ASCII TERMINAL AND SNMP CONNECTION

The DL3800 is accessed by an ASCII terminal or SNMP Management System workstation through direct, daisy-chained or dial-up modem connection.

On the rear panel of the DL3800, two female 9-pin receptacles labeled Terminal and Network Management are provided for connection to the ASCII terminal or SNMP workstation. An RS-232 straight ribbon cable with DB 9 male connectors is used to link the DL3800 with the terminal, modem or workstation.

Direct Connection: For direct connection, using the appropriate DB-9 ribbon-type cable, connect the ASCII terminal or SNMP workstation to the DL3800 through the Terminal or SNMP connector on the back of the rear panel. The baud rate, parity bit and stop bit settings must match those of the terminal: **baud rate, 9600; eight bits, no parity and two stop bits.**

Modem Connection: When using a modem, the baud rate, parity bit and stop bit settings of the modem must match the terminal or workstation port default settings: **baud rate 9600; eight bits; no parity; and two stop bits** If these parameters are not the same, reconfigure the Unit default settings using the front panel controls.

When the parameters of the modem and the terminal or workstation port coincide, using the RS-232 straight ribbon cable, connect the modem to the appropriate RS-232 comm port (Terminal or SNMP) on the rear panel of the DL3800. Then, connect the modem to the phone line and the ASCII terminal or SNMP workstation. Nine-pin to 25-pin adapters and null-modem adapters, are available from Digital Link. Specify a male or female terminal connection when ordering.

For direct connection, the terminal, workstation or modem may be placed up to 50 feet away from the comm port when operating at 9600 baud. Distances may be increased if the baud rate is reduced.

Daisy Chaining: Multiple DL3800s can be daisy-chained together through the Terminal Port to provide centralized network monitoring and management capabilities

A ribbon-type cable with DB-9 connectors is available from Digital Link for daisy-chaining DL3800s. The cable can be ordered to daisy-chain four units (part # 154-00051-01), eight units (part # 154-00052-01) or twelve units (part # 154-00053-01).

If using a cable other than the above, see Terminal Port pin assignments, Section 8.1. With this cable, CTS (pin 8) must be connected between DL3800s, but must not be connected to terminal.

The one female connector on the ribbon is to be connected to the terminal or modem (if a remote site). The remaining male DB-9 connectors are connected to the Terminal Port. Each unit must be assigned an unique node number.

When units are daisy-chained together, the local terminal must be operating in Multidrop Mode (see section 4.3.4). Each unit should be given an unique Node Number.

Note: For detailed instructions on installing SNMP systems, refer to the separate installation guides for these products.

7 MAINTENANCE AND DIAGNOSTICS

7.1 EQUIPMENT RETURN AND REPAIR

If faulty equipment is suspected, perform the tests in this section. If, after performing these tests, the DL3800 or any associated module is suspected to be faulty, call Digital Link Technical Support at: (408) 745-6200.

7.2 GENERAL

The following sections contain procedures for the pre-operational testing of the DL3800 Digital Inverse Multiplexer and a guideline for troubleshooting. The troubleshooting procedure is designed to isolate the faulty or malfunctioning item to the T1 network, the DTE equipment, the cable from the DTE to the DL3800 or the DL3800 itself. The built-in diagnostic features of the DL3800 aid the user in quickly identifying and isolating faults.

Using the front panel buttons and display, the ASCII terminal or SNMP workstation, the user can run a series of loopback tests. Verification of the proper functioning of the DTE equipment and the DL3800 is accomplished through DTE loopback and a self test. Testing for the proper functioning of the remote DL3800 is accomplished by a Line loopback.

It is also possible to verify the path from the DTE through the T1 line to the remote-end DL3800, provided the DTE equipment can generate and detect looped back bit streams.

In the **Line Loopback**, the remote unit regenerates the incoming signal and transmits it back to the local DL3800 where the signal is checked for errors.

In the **DTE/Network Loopback,** the signal received by the DTE Board from the DTE is looped back to the DTE and the signal received from the T1 processor is looped back towards that board simultaneously.

7.3 TROUBLESHOOTING SUGGESTIONS

These suggestions can help determine which portion of the network might be at fault. When discovering a failure, check the simple solutions first. Is the power turned on? Is the equipment set up and configured properly? Will swapping cable pairs solve the problem?

The DL3800 is equipped with alarms that alert the user to the existence of possible problems with the unit, and received signals from the DTE or network. INS LEDs on the Module provide a quick indication of the status of that module: green light indicates everything is functioning normally; yellow light means the module is powered, configured and ready to be put into service.

7.4 TEST PROCEDURES

7.4.1 DTE

7.4.1.1 Run DTE/Network Loopback test on the DL3800 (see section 4.3.7).

If loopback is successfully initiated, the "testing" message will appear. If unsuccessful, see Section 7.5 for possible causes.

7.4.2 NETWORK

7.4.2.1 Run Payload or Line Loopback test on selected T1 port (See section 4.3.7).

7.4.2.2 If loopback is successfully initiated, the "test running" message will appear. If unsuccessful, see Section 7.5 for possible causes.

FAILED LOOPBACK	POSSIBLE CAUSE
Line Loopback, See Section 5.4.4.2.1	(1) TELEPHONE COMPANY T1 line.
	(2) Wiring between the TELEPHONE COMPANY demarcation points or the DL3800 at either or both ends.
Payload Loopback, (See Section 5.4.4.2.2)	(1) DTE connected to the channel which reports the errors.
	(2) Cable between the DTE channel reporting errors and the DL3800
DTE/NETWORK Loopback, See Section 5.4.4.3.1	(1) DTE connected to the channel which reports errors
	(2) Cable between the DTE channel reporting errors and the DL3800

FIGURE 7.5, continued

8 APPENDIX

8.1 CONNECTOR PIN ASSIGNMENTS

8.1.1 TERMINAL AND NMS NETWORK MANAGEMENT PORT PIN ASSIGNMENTS

PIN		SIGNAL	
2	SD	Send Data	(to terminal)
3	RD	Receive Data	(from terminal)
8	CTS	Clear to Send	(to DL3800 comm network)
5	SG	Signal Ground	(bi-directional)

8.1.2 HSSI DTE CONNECTOR PIN ASSIGNMENTS

SIGNAL	DIR.	PIN # +SIDE	PIN # -SIDE
SG - Signal Ground	—	1	26
RT - Receive Timing	To DTE	2	27
CA - DCE Available	To DTE	3	28
RD - Receive Data	To DTE	4	29
- Reserved Future	To DTE	5	30
ST - Send Timing	To DTE	6	31
SG - Signal Ground	—	7	32
TA - DTE Available	From DTE	8	33
TT - Terminal Timing	From DTE	9	34
LA - Loopback Circuit A	From DTE	10	35
SD - Send Data	From DTE	11	36
LB - Loopback Circuit B	From DTE	12	37
SG - Signal Ground	—	13	38
5 ancillary to DCE	From DTE	14-18	39-43
SG - Signal Ground	—	19	44
5 ancillary from DCE	To DTE	20-24	34-49
SG - Signal Ground	—	25	50

8.1.3. DB25 to V.35 DTE Connector Pin Assignments

TWISTED PAIR	V.35	DB25
YEL	T	16
BLK	R	3
BRN	S	14
BLK	P	2
BLK	E	6
BLU	NC	NC
WHT	H	20
RED	NC	NC
RED	K	18
GRN	B	7
RED	D	5
YEL	NC	NC
ORN	F	8
RED	NC	NC
BLK	X	9
RED	V	17
GRN	Y	15
BLK	AA	12
BLU	U	24
RED	W	11
BLU	C	4
GRN	NC	NC
DRAIN	A	

8.1.4 DB25 to RS449 DTE Connector Pin Assignments

TWISTED PAIR	RS449	DB25
BLU	17	24
RED	35	11
BLU	7	4
BLK	25	19
YEL	24	16
BLK	6	3
BRN	22	14
BLK	4	2
BLK	11	6
GRN	18	25
YEL	27	13
RED	9	5
ORN	13	8
RED	31	10
BLK	26	9
RED	8	17
GRN	5	15
BLK	23	12
BLK	19	7
BLU	NC	NC
DRAIN	1	NC

8.1.5 T1 NETWORK PIN ASSIGNMENTS

The network connector is a DB15 connector. The assignments for the Network connector are given below.

PIN	SIGNAL
1	Send towards Network Tip (T1)
9	Send towards Network Ring (R1)
2	Frame Ground
3	Receive from Network Tip (T)
11	Receive from Network Ring (R)
4	Frame Ground
5,6,7,8,10, 12,13,14,15	N/C

8.1.6 DB25 to DB9 ADAPTER PINOUTS

An adapter is available from Digital Link that will allow the Digital Link DB9 Comm Port ribbon cable to be compatible with a DB25 connector on the terminal port.

DB9	DB25
3	2
2	3
7	4
8	5
6	6
5	7
1	8
9	23
4	21

8.1.7 EXTERNAL CLOCK CONNECTOR PIN ASSIGNMENTS

A DB-9 connector is provided on the DL3800 rear panel for connection to an External Clock. Pin Assignments for the External Clock connector are as follows:

PIN	SIGNAL
1	Signal
5	Shield
2,3,4,6,7,8,9	No Connection

8.2 DTE CLOCK RATES

	#Networks	DTE Clock Rate
B8ZS	1	1.528 Mb/s
	2	3.056 Mb/s
	3	4.584 Mb/s
	4	6.112 Mb/s
	5	7.640 Mb/s
	6	9.168 Mb/s
	7	10.696 Mb/s
	8	12.224 Mb/s
AMI	1	1.336 Mb/s
	2	2.672 Mb/s
	3	4.008 Mb/s
	4	5.344 Mb/s
	5	6.680 Mb/s
	6	8.016 Mb/s
	7	9.352 Mb/s
	8	10.688 Mb/s

8.3 FACTORY DEFAULT SETTINGS

UNIT

ALARM ENABLE:	Disabled
AUTOMATIC BACKUP:	5 minutes after each database change
FRONT PANEL:	On
UNIT NUMBER:	0
TERMINAL BAUD RATE:	9600
TERMINAL PARITY & BITS:	8 bits, No parity
TERMINAL STOP BITS:	2
XON/XOFF	Enabled
MULTIDROP:	Enabled

DTE

DTE INTERFACE:	V.35
CLOCK:	SCTE
TX CLOCK:	Normal
RX DLOCK:	Normal
RLSD MODE:	Automatic
DSR MODE:	Automatic
CTS MODE:	Automatic
TM MODE:	Automatic
DTE LOSS DETECTION:	RTS

NETWORK

ALARM:	Mask
ACTIVE/RESTORE MODE:	Never Use
FRAME:	ESF
LINECODE:	B8ZS
EQUALIZATION:	0'-132"
FDL:	Enabled
SET/RESET:	Enabled
PRIMARY CLOCK SOURCE:	Xmt: Int., Rcv: Net 1
SECONDARY CLOCK SOURCE:	Xmt: Int., Rcv: Net 2
DSU MODE:	Inverse Mux (Standard Operation)
SUPPRESS YELLOW DET:	Disabled

NETWORK THRESHOLDS

CONSECUTIVE THRESHOLDS:	Fallback Disabled, Seconds 10
INTERVAL THRESHOLDS (15 MIN)::	Fallback Disabled
	Seconds: Major; 100 Minor; 100
INTERVAL THRESHOLDS (24 HR):	Fallback Disabled
	Seconds: Major; 10 Minor; 10

SNMP CONFIGURATION

ALL ADDRESSES:	0.000.000.000
READ COMMUNITY STRING:	Public
WRITE COMMUNITY STRING:	Public
TRAP COMMUNITY STRING:	Public
SNMP BAUD RATE:	9600
BITS & PARITY:	8 bits, No parity
STOP BITS:	2

TESTS

ALL LOOPBACKS & TESTS:	Off