FABRI-TEK

MEMORY PRODUCTS DIVISION

MODEL 8

ADD-ON CORE MEMORY

TECHNICAL MANUAL

(PDP 8 I and PDP 12)

ORIGINAL PRINTING: 8 November 1973
REVISION A: 16 January 1974

Publication Number: 400-0226-00
© Copyright 1973 by FABRI-TEK, INC.
Printed in the United States of America

TABLE OF CONTENTS

SECTION I ..... GENERAL INFORMATION AND SPECIFICATIONS
- General Description 1-1
- Capacity 1-1
- Memory Cycle 1-1
- System Specifications 1-1

SECTION II ..... INSTALLATION PROCEDURES
- CPU Modification 2-1
- Assembly 2-2
- Final Considerations 2-2

SECTION III ..... PRINCIPLES OF OPERATION
- Multiplex Assembly 3-1
  - Control Signals 3-1
  - Multiplex Data Path 3-1
- Memory 3-4
  - Cycle Control 3-4
  - Current Drive 3-4
  - Data Loop 3-6
- Memory Operation 3-9
  - Read Portion of the Cycle 3-9
  - Write Portion of the Cycle 3-9

SECTION IV ..... MAINTENANCE
- Recommended Test Equipment 4-1
- Preventive Maintenance 4-1
- Corrective Maintenance 4-1
- Memory Test Patterns and Tests 4-1
  - Ones 4-1
  - Zeros 4-2
  - Worst Pattern 4-2
  - Worst Pattern Complement 4-2
- Malfunction Analysis 4-2
- Memory Failures 4-2
  - Control Oriented Errors 4-2
  - Address Oriented Errors 4-4
  - Data Oriented Errors 4-8
- Multiplex Assembly Failures 4-8

SECTION V ..... REPLACEMENT PARTS LIST
- FABRI-TEK Numbers 5-1
- FABRI-TEK Parts 5-1

SECTION VI ..... REFERENCE DOCUMENTS

APPENDIX A ..... ALPHABETICAL LISTING OF MEMORY SYSTEM MNEMONICS

LIST OF ILLUSTRATIONS

FIGURE	TITLE	PAGE
1-1	Model 8/I	1-2
3-1	Functional Units	3-2
3-2	Multiplex Data Path	3-3
3-3	Information Flow Diagram	3-5
3-4	Drive Line Selection	3-7
3-5	Data Loop	3-8
4-1	Control Oriented Errors	4-3
4-2	Address Oriented Errors	4-5
4-3	System Configuration	4-6
4-4	Data Oriented Errors	4-9

TABLE	TITLE	PAGE
1-1	Specifications	1-3
2-1	Interface Signal Configuration	2-1
2-2	Back Panel Modification	2-1
4-1	Word Location	4-4
4-2	Circuit Decoding	4-7

SECTION I
GENERAL INFORMATION AND SPECIFICATIONS

The FABRI-TEK Model 8/I Add-On Memory System is a completely compatible 24K (24,576) word addition to main storage for the Digital Equipment Corporation PDP*8/I and PDP 12 computers. This manual divides the technical information for the Model 8/I into the following sections.

I GENERAL INFORMATION AND SPECIFICATIONS
II INSTALLATION PROCEDURES
III PRINCIPLES OF OPERATION
IV MAINTENANCE PROCEDURES
V REPLACEMENT PARTS LISTS
VI REFERENCE DOCUMENTS

GENERAL DESCRIPTION

The Model 8/I consists of a memory unit, a multiplex unit, and a cable assembly. The memory unit, including a FABRI-TEK P3 power supply, and the multiplex unit are housed in a 5 1/4 inch enclosure which can be mounted in a standard 19 inch relay rack. The cable assembly attaches to connectors on the enclosure and to five connectors in the Central Processing Unit (CPU). Figure 1-1 is an outline drawing of the Model 8/I.

Power supply technical information is in a separate manual, FABRI-TEK Publication Number 400-0166-00.

CAPACITY

The multiplex unit transforms the 8192 36-bit word memory unit into a 24,576 12-bit word memory unit. The additional storage capacity to the CPU is 24K.

MEMORY CYCLE

The Model 8/I operates in the split cycle mode. The split memory cycle consists of a Read portion followed by a Write portion. The CPU starts both portions. The Read portion of the memory cycle unloads the contents of the storage location and the Write portion loads the storage location.

SYSTEM SPECIFICATIONS

Table 1-1 summarizes the system specifications.

*PDP and DEC are registered trademarks of the Digital Equipment Corporation.

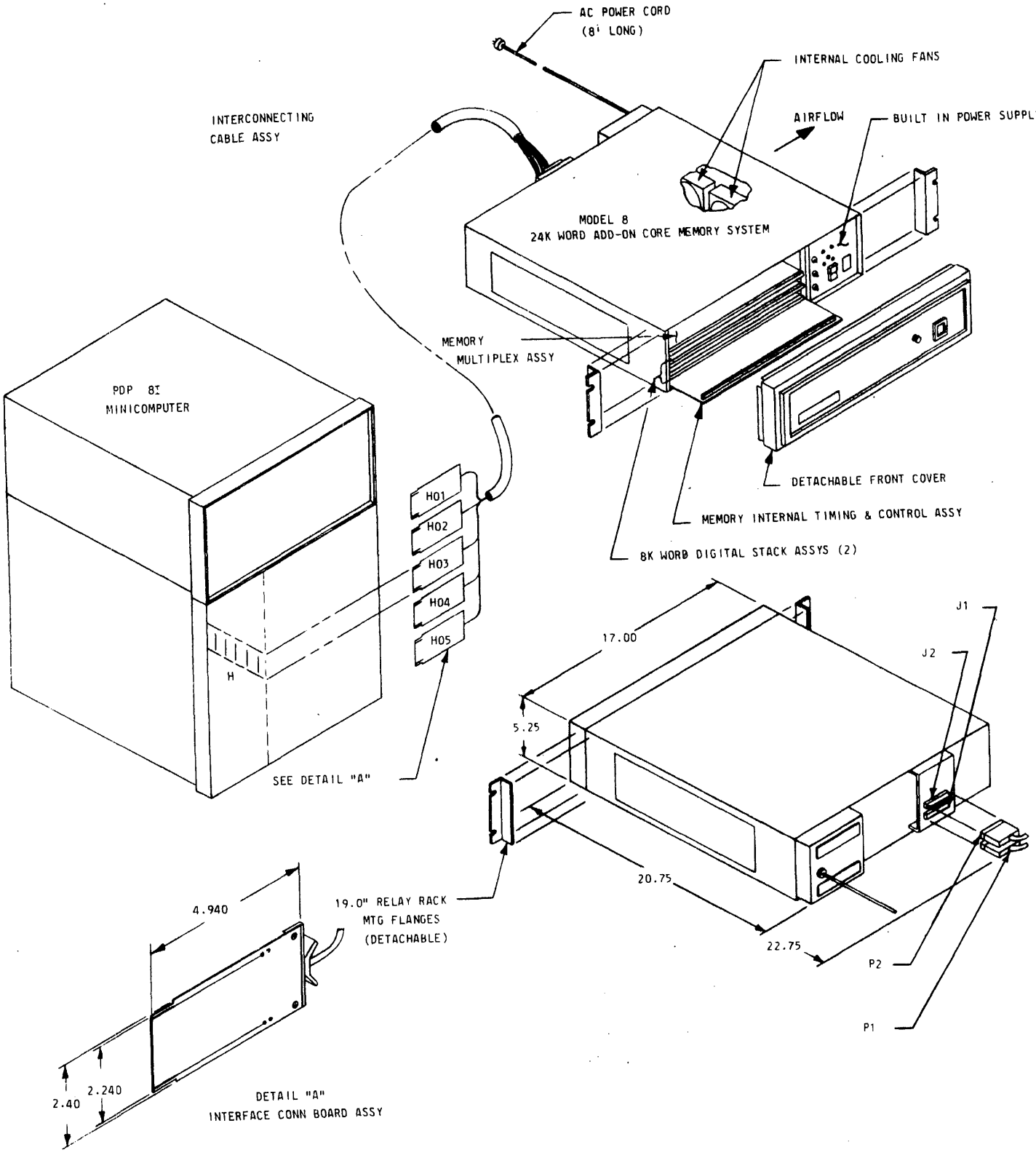

Figure 1-1
MODEL 8/I

Table 1-1.–SPECIFICATIONS

MEMORY CYCLE AND OPERATION			
Split Cycle			Read-Modify-Write
ADDRESSING			
Method			Random
Format			Single Rail Binary
MEMORY CAPACITY			
Address			24K
Word Length			12 Bits
DIMENSIONS	H.	W.	D.
Enclosure*	5.25"	17.00"	20.75"
Module Assemblies	**	11.00"	14.75"
INTERFACE CONNECTORS			
Two 50-Pin Amphenol Connectors			
INTERFACE LOGIC VOLTAGES			
Logic One In			+2.4V to +5.5V
Logic One Out			+2.4V to +5.5V
Logic Zero In			0.0V to +0.8V
Logic Zero Out			0.0V to +0.5V
ENVIRONMENT PARAMETERS			
Operating			0°C to +50°C
Non-Operating			-40°C to +80°C
Humidity (Without Condensation)			90%
COOLING			
Forced Air From Enclosure Fans			
AC POWER REQUIREMENT			
105 - 115 VAC, 60 Cycles			
AC POWER CONSUMPTION			
450 Watts Maximum			
DC POWER REQUIREMENTS			
+15 VDC From Power Supply			
+5 VDC From Power Supply			
-15 VDC From Timing and Control Assembly			

*Enclosure is 19.00 in. wide with rack mounting brackets attached, and 22.75 in. deep with allowance for cable bend.

**Timing and Control Module mounts on 0.60 in. centers; Digital Stack Modules mount on 1.00 in. centers.

SECTION II
INSTALLATION PROCEDURES

The FABRI-TEK Model 8/I Add-On Memory System consists of a cable assembly and an enclosure containing the three printed circuit assemblies of the Memory and the Multiplexer printed circuit assembly.

CPU MODIFICATION

Some early models of the CPU may have a different interface signal pin configuration from the cable assembly. The difference involves the Memory Buffer data bits and the Extended Address bits. The correct connections are described in Table 2-1. Verify continuity between the two points in the CPU with a VOM. If there is no continuity between the two points, change the wires to provide continuity.

Table 2-1.–INTERFACE SIGNAL CONFIGURATION

CPU INTERFACE PIN	CPU INTERNAL PIN	SIGNAL NAME
H01-D2	B12-P2	MCMB 03
H01-E2	B12-S1	MCMB 04
H01-H2	B12-V2	MCMB 05
H03-D2	B16-E1	EA 0
H03-E2	B16-J2	EA 1
H03-H2	B16-L1	EA 2

If the resident storage capacity of the CPU is 4K, modify the CPU to change the address range of the resident storage from addresses 0 through 4095 to addresses 24,576 through 28,671. Expansions from 4K of resident storage require memory extension control circuitry which is available only from Digital Equipment Corporation. Modify the CPU by removing two wires from the back panel and adding two wires as described in Table 2-2.

Table 2-2.–BACK PANEL MODIFICATION

REMOVE WIRES BETWEEN:	ADD WIRES BETWEEN:
1. B16-S1 and B21-L1	1. B16-E1 and B21-L1
2. B16-V2 and B21-M1	2. B16-J2 and B21-M1

ASSEMBLY

Insert the five printed circuit card connectors of the cable assembly into the CPU card rack assembly at the locations designated on each connector. The location designator is located near the handle on the ground plane side of the card. Insert the card with the A pin designator at the top and the V pin designator at the bottom of the card. Note, that when the card is properly oriented, the pin designators are upside down. Route the cable as illustrated in Figure 1-1. Attach P1 and P2 of the cable assembly to J1 and J2 respectively, on the enclosure.

FINAL CONSIDERATIONS

Power both the CPU and the Model 8 from the same AC circuit to assure that during power failures both will lose power at the same time. The CPU has an auxiliary power outlet located behind the power supply, which can furnish power for the Model 8.

After the system is assembled, assure correct operation by running the diagnostic programs supplied with the CPU.

SECTION III
PRINCIPLES OF OPERATION

The Model 8/I Add-On Memory System accepts and retains data from the CPU or from Input-Output (I/O) units and delivers data to the CPU or the I/O units. The Model 8/I handles all inputs and outputs as information, making no distinction between program instructions and data.

The Model 8/I has two functional units, the Multiplex Assembly and the Memory. Figure 3-1 is a functional block diagram of the Model 8.

MULTIPLEX ASSEMBLY

The Multiplex Assembly is a printed circuit assembly which is placed into slot number four of the enclosure. Functionally, the Muliplexer transforms the 8192 36-bit word memory into a 24,576 12-bit word memory. Control signals, processed on the Multiplex Assembly, direct the data flow between the CPU and the Memory.

CONTROL SIGNALS

DATA SAVE. The Data Save signal halts the operation of the Model 8 if there is a power failure in either the CPU or the Model 8.

MASTER RESET. The Master Reset signal sets the internal control circuits to the state required to start a memory cycle.

MEMORY START. The Memory Start signal defines the beginning of a memory cycle by starting the Read portion of the memory cycle.

WRITE. The Write signal starts the Write portion of the memory cycle after the Read portion is complete.

STROBE. The Strobe signal notifies the CPU that data is available at the CPU.

MEMORY DONE. The Memory Done signal notifies the CPU that the memory cycle is complete.

MULTIPLEX DATA PATH

Figure 3-2 is a typical multiplex data path; there are 12 identical data paths. During Read operations, the Multiplexer receives 36 bits of data from the memory, selects one 12 bit segment, and sends it to the CPU. During Write operations, the Multiplexer receives a 12 bit word from the CPU, places it into the selected segment of the 36 bit word, and stores the 36 bits in the Memory.

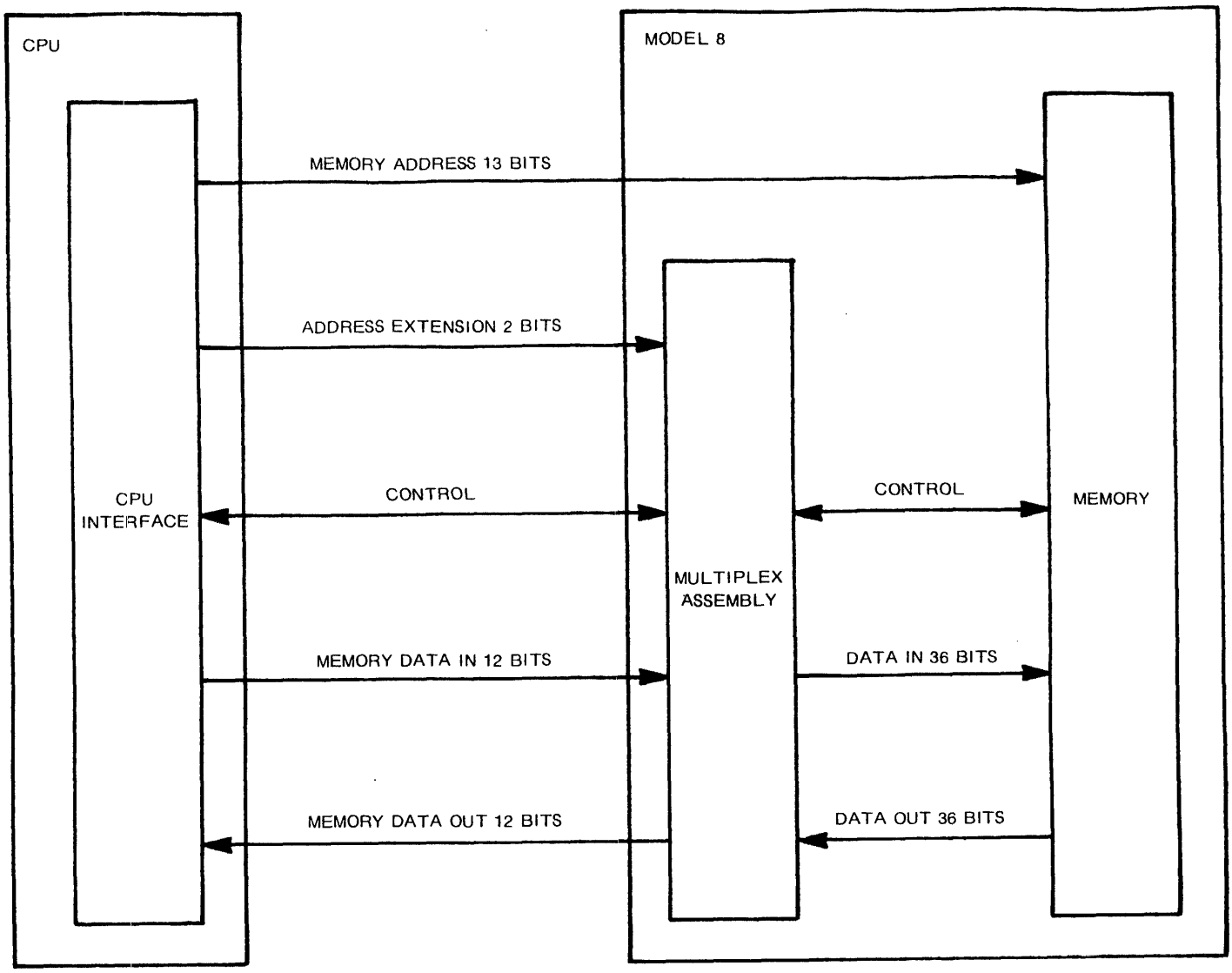

Figure 3-1
FUNCTIONAL UNITS

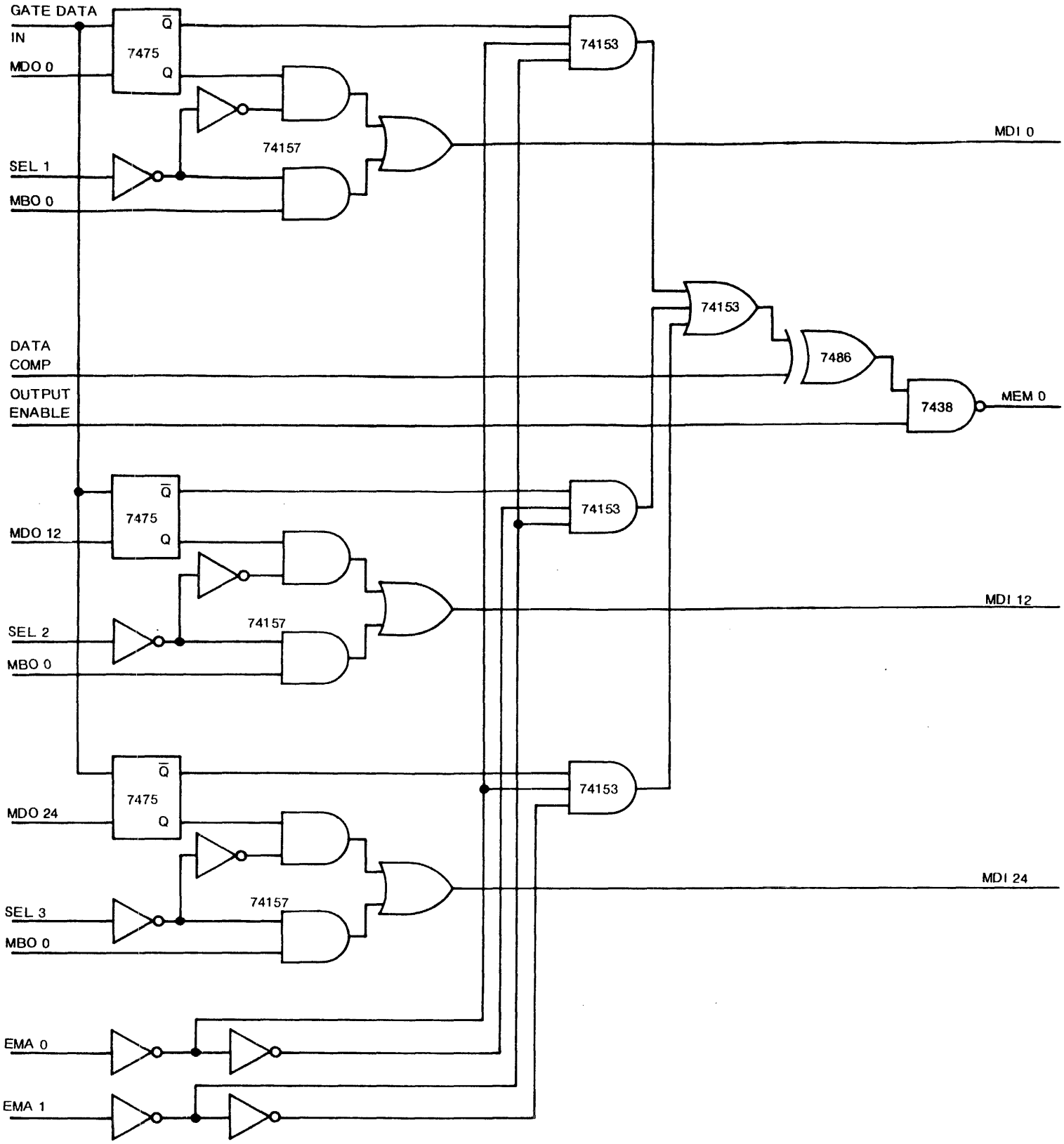

Figure 3-2
MULTIPLEX DATA PATH

During the Read portion of the cycle, the Gate Data In signal latches the 36 bits of data from the Memory into the Multiplexer data register. The Multiplexer decodes address bits EA0 and EA1 to select the 12 bit segment of the 36 bit word which it sends to the CPU. The Data Comp signal logically complements the output data. The Output Enable signal transfers the 12 bits of data to the CPU.

During the Write portion of the cycle, the Multiplexer decodes address bits EA0 and EA1 to select the 12 bit segment of the 36 bit memory word which receives the new data from the CPU. This new data and the other 24 bits, which remain unchanged, are stored in the Memory.

MEMORY

The Memory is a three wire, 3D, coincident current core memory with 8192 36 bit locations. The Memory consists of one Timing and Control Assembly located at the bottom of the enclosure in slot number one and two Digital Stack Assemblies in slots number two and three. Each Digital Stack consists of a Memory Electronics Assembly and a plug-in Core Array Assembly.

The Memory requires five control signals for operation: Cycle Initiate, Cycle Continue, Read/Write Control, Split Cycle Control and Data Save. Cycle Initiate and Cycle Continue are generated on the Interface Control Assembly. The power supply produces the Data Save signal. The Model 8 always operates in the split cycle mode, requiring the Split Cycle Control input and the Read/Write Control input to be grounded.

The Memory has three functional units: Cycle Control, Current Drive, and Data Loop. Figure 3-3 is a diagram of the Memory functional units.

CYCLE CONTROL

The Cycle Control section directs the internal operations of the Memory. Two clocks and the control signals from the CPU produce internal control signals which direct the sequence of operation.

CURRENT DRIVE

The Current Drive section decodes the address information, selects the proper drive lines, and drives Read and Write switching currents. The current compensation network adjusts drive currents to compensate ambient temperature changes.

ADDRESS DECODE. The address decoding network decodes input address bits 2^0 through 2^{12} to select the proper drive lines on each axis. On the X axis, address bits 2^0, 2^1, and 2^2 enable a read sink or a write source transistor and bits 2^9, 2^{10}, 2^{11}, and 2^{12} enable a read or write switch transistor. On the Y axis, address bits 2^3, 2^4, and 2^5 enable a read source or a write sink transistor and bits 2^6, 2^7, and 2^8 enable a read or write switch transistor. The Inhibit signal, when not active, selects Read paths and, when active, selects Write paths. Address bits 2^{13} and 2^{14} select the proper 8K section (Digital Stack) of storage.

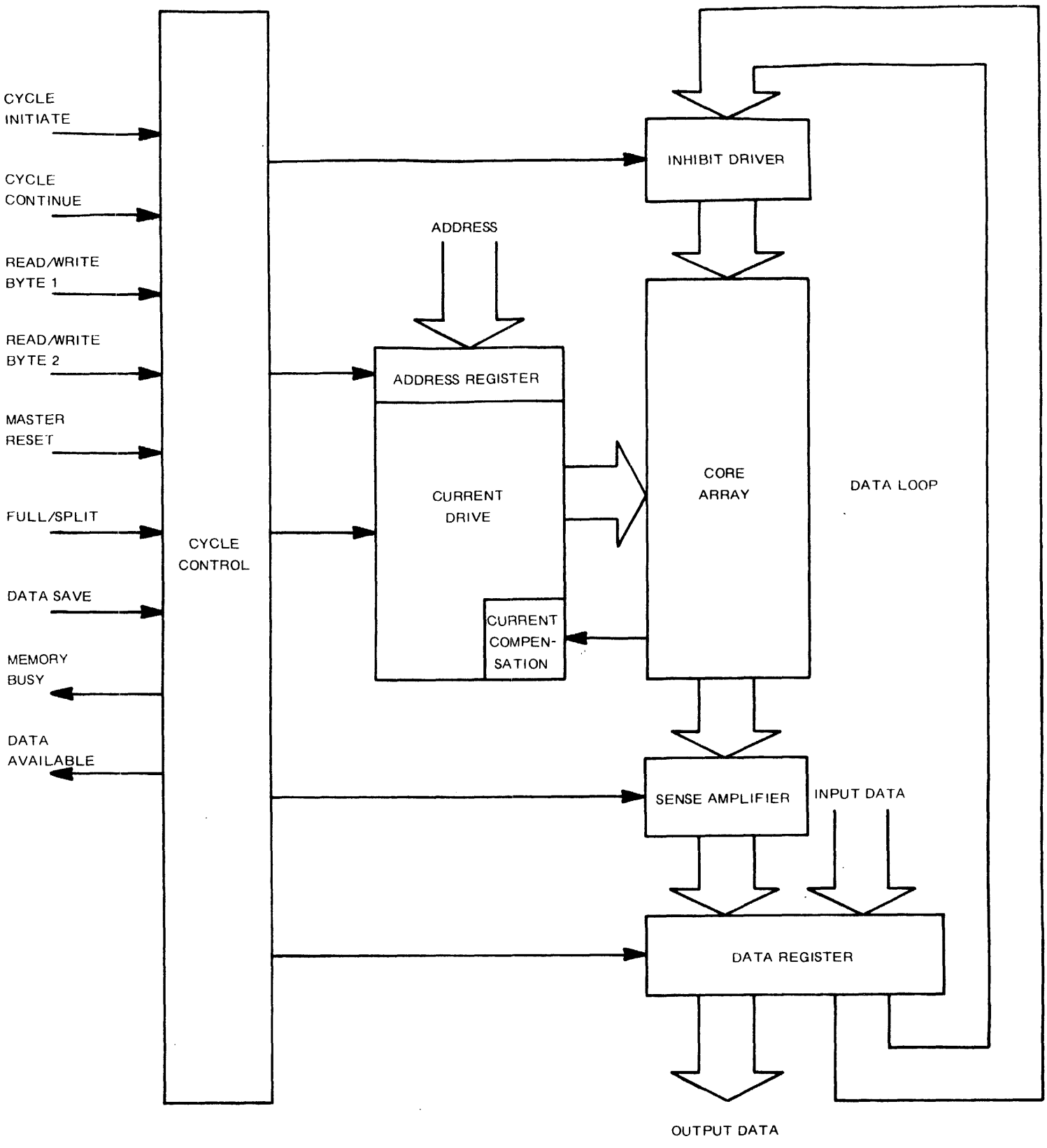

Figure 3-3
INFORMATION FLOW DIAGRAM

CURRENT SOURCE, SWITCH, AND SINK. For each current path, three transistors determine the path of the switching current from source to sink. The transistor nearest the positive voltage source is the source transistor, the one nearest the negative voltage source is the sink transistor, and the one between is the switch transistor. Figure 3-4 shows the current paths for some of the drive lines. Decoded address signals enable one source, one switch, and one sink transistor for each axis for both Read and Write operations.

DRIVE LINE SELECTION. Figure 3-4 is a simplified drive line scheme which depicts all basic drive line selection electronics on the Memory Electronics Assembly, but only one-eighth of the Core Array Assembly. For complete drive line details consult the Core Array Schematic in Section VI, Reference Documents. The decoded address signals which control transistor operation are shown along both sides of the illustration.

The eight underlined signals define Read and Write switching current paths for both axes for address 14605. For this address, the three signals which control drive current in a Write direction through Y drive line 33 are the Y Source Write Timing signal to the base of Q18, the YWRXX6XX signal to the base of the switch transistor, and the YWRXXX0X signal to the base of the Y sink transistor. To trace the Y Write current path in Figure 3-4, begin at the +15VDC source at the top of the illustration. The current path is from –

- the +15VDC source,
- through the secondary of the switch core transformer,
- through transistor Q18,
- through the transformer,
- right and down the switch transistor common collector line,
- through the transistor controlled by signal YWRXX6XX,
- through Y drive line 33,
- through Y Write sink transistor controlled by signal YWRXXX0X,
- through the transformer, and
- to the -15VDC source.

Similarly, it is possible to trace the Read switching current path through Y drive line 33 using the Y Read Sink Timing signal, the YRDXXX0X signal, and the YRDXX6XX signal.

DATA LOOP

The Data Loop is the data path from the input data interface through the inhibit drivers, Core Array and sense amplifiers to the output data interface. There are 36 parallel data loops. Data from the CPU enters the data register and is stored in the Core Array during a Write operation. Data from the Core Array enters the data register through the sense amplifiers, and is transferred to the CPU during a Read operation. Figure 3-5 is a simplified schematic diagram of a Data Loop.

DATA REGISTER. The data register is located on the Memory Electronics Assembly. The data register temporarily stores input data which will be stored in the Core Array and output data which will be sent to the Multiplex Assembly.

SENSE AMPLIFIERS. The sense amplifiers are located on the Memory Electronics Assembly. During Read operations, sense amplifiers detect the presence of a logical one stored in the Core Array. The output of the sense amplifiers enters the data register for transfer to the CPU.

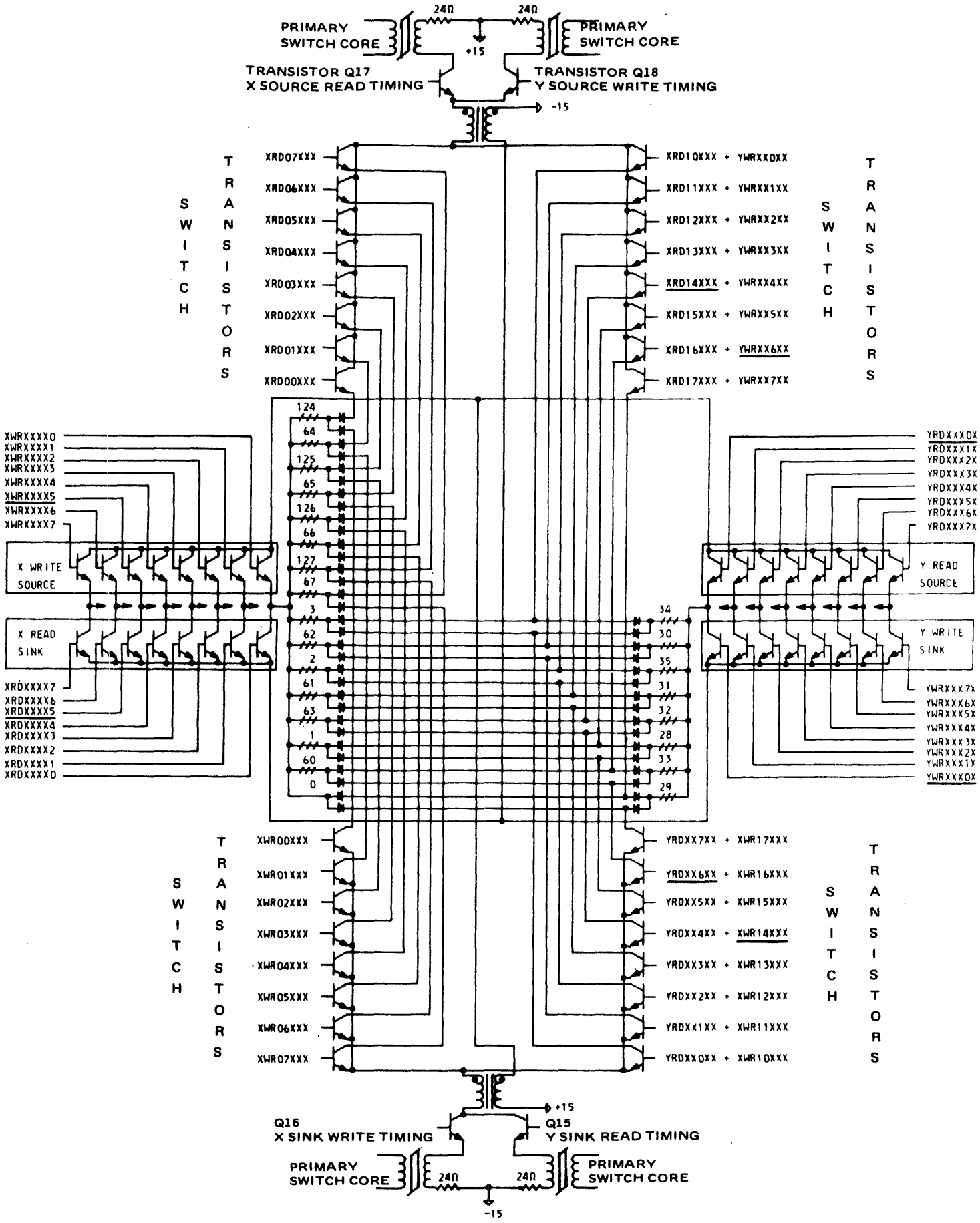

Figure 3-4

DRIVE LINE SELECTION

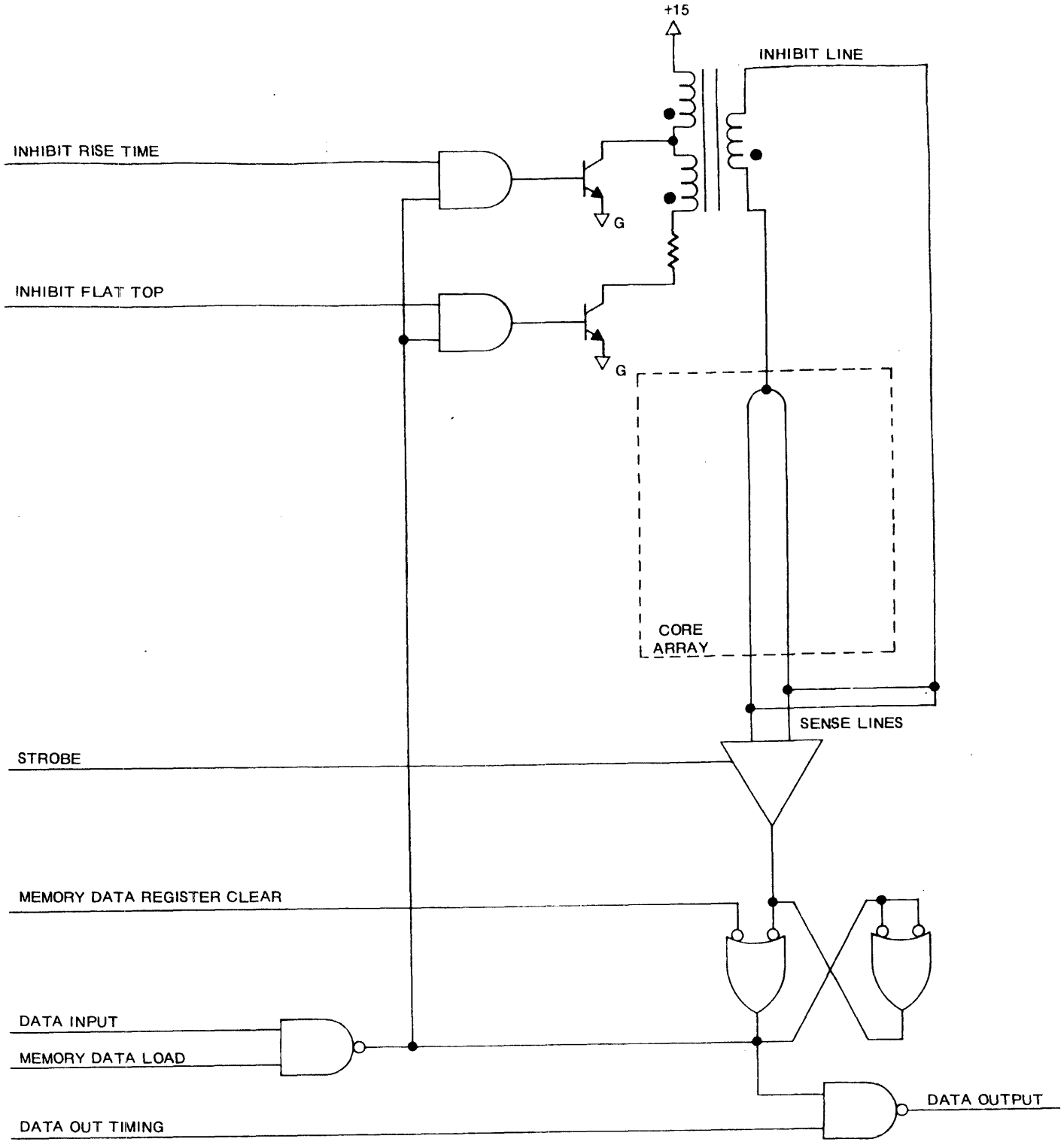

Figure 3-5
DATA LOOP

INHIBIT DRIVERS. The inhibit drivers are located on the Memory Electronics Assembly. During Write operations, inhibit drivers prevent the switching of cores which are to store a logical zero. The data register controls the inhibit drivers.

CORE ARRAY. The Core Array Assembly contains the ferrite cores and the diode matrices. The Core Array is divided into two arrays with 18 core mats of 8192 cores. Each mat has 128 X axis drive lines and 64 Y axis drive lines. Three wires thread each core: an X axis drive line, a Y axis drive line, and a common sense-inhibit line. The diode matrix for each axis steers switching currents through the selected drive lines in the Core Array.

MEMORY OPERATION

The Memory in the Model 8/I operates in the split cycle mode; each memory cycle has a Read portion followed by a Write portion. The CPU starts both the Read portion and the Write portion. At the beginning of a memory cycle the CPU also supplies the address of the data.

READ PORTION OF THE CYCLE

The Memory Start signal from the CPU initiates the Read portion of the memory cycle. The Read portion unloads the 36 bits of data at the location specified by the CPU address. The Memory presents the data to the CPU and halts operation, waiting for the CPU to initiate the Write portion.

WRITE PORTION OF THE CYCLE

The Write signal from the CPU initiates the Write portion of the memory cycle. The Write portion loads 36 bits of data into the location specified by the CPU address. The Memory halts operation and waits for the next request from the CPU.

SECTION IV
MAINTENANCE

Most memory system malfunctions develop characteristic symptoms. Maintenance procedures minimize down-time by providing information to analyze malfunctions, to understand their significance, and to direct troubleshooting to the most probable cause. When spare modules are available, substitution of the suspect module is the best troubleshooting procedure.

RECOMMENDED TEST EQUIPMENT

EQUIPMENT	MANUFACTURER	TYPE
Oscilloscope	Tektronix	547 Series or Equivalent
Pre-Amp	Tektronix	1A2 or Equivalent
Voltage Probe	Tektronix	10:1 Attenuation
Digital Multimeter	Fairchild	Model 7050 or Equivalent
VOM	Triplett	630-NA or Equivalent

PREVENTIVE MAINTENANCE

With a knowledge of the operating environment, the user determines the requirement for preventive maintenance.

CORRECTIVE MAINTENANCE

Corrective maintenance is necessary to restore normal operation of the system if malfunctions develop. Control, address, and data oriented errors are the most common error classifications. In each classification the cause can be either external or internal to the memory system. Classification of an error does not eliminate the possibility of an interrelationship between classifications. Many apparent memory system problems are the result of program and timing errors.

Give the power supply primary consideration by assuring that it is properly furnishing all outputs, including the Data Save signal. Next assure that the interface cables are firmly attached and that all interface signals are present.

MEMORY TEST PATTERNS AND TESTS

The Ones, Zeros, Worst Pattern, and Worst Pattern Complement are externally generated test patterns. Test procedures using these test patterns can either confirm reliable operation or aid error detection.

ONES

The Ones test pattern consists of logical ones in every location in the Core Array.

ZEROS

The Zeros test pattern consists of logical zeros in every location in the Core Array.

WORST PATTERN

Some memory malfunctions develop only under worst case conditions. The Worst Pattern produces the maximum disturb noise on the sense line during a Read operation. The Worst Pattern is the logical exclusive OR function of address bits 2^7 and 2^{12}. Stated in another way: for the first 4096 words, blocks of 128 words containing zeros alternate with blocks of 128 words containing ones with the first block containing zeros. For the second 4096 words, blocks of 128 words containing zeros alternate with blocks of 128 words containing ones with the first block containing ones.

WORST PATTERN COMPLEMENT

The Worst Pattern Complement is the logical complement of the Worst Pattern.

MALFUNCTION ANALYSIS

Malfunctions can occur in any of one of four places in the system: the CPU, the interconnecting cable, the Multiplex Assembly, or the Memory. The first task is to locate the malfunctioning unit.

Determine if errors occur in the CPU resident memory, the Model 8, or both by removing the interconnecting cable and running the diagnostic programs. If errors still occur, troubleshoot the CPU. If errors occur only in the Model 8 assure that the control signals, address, and data are present at the Model 8. If all signals are present, troubleshoot the Multiplexer and the Memory.

MEMORY FAILURES

Failures developed in the Memory while running diagnostic programs normally fall into one of the following classifications:

CONTROL ORIENTED ERRORS.

Control oriented errors originate in the external equipment or in the Cycle Control section. Failure to initiate or complete an operation or erratic behavior with no recognizable pattern are characteristic of control oriented errors. Use Figure 4-1 as an aid to troubleshooting.

CONTROL ERROR SYMPTOMS

1. SYSTEM WILL NOT OPERATE, OR
2. SYSTEM WILL NOT READ, OR
3. SYSTEM WILL NOT WRITE, OR
4. ERRORS IN RANDOM DATA BITS, OR
5. ERRORS AT RANDOM ADDRESSES, OR
6. ERRATIC BEHAVIOR.

(1) INPUT CONTROL SIGNALS

1. CYCLE INITIATE
2. CYCLE CONTINUE
3. MEMORY DATA CLEAR

(2) INTERNAL CONTROL SIGNALS

1. MEMORY DATA REGISTER CLEAR
2. MEMORY DATA LOAD
3. STROBE
4. DATA OUT TIMING
5. INHIBIT FLAT TOP
6. INHIBIT RISE TIME
7. X SOURCE READ
8. Y SOURCE WRITE
9. Y SINK READ
10. X SINK WRITE
11. X SINK READ + WRITE SINK SOURCE TIME
12. Y SOURCE READ + WRITE SINK SOURCE TIME
13. READ SWITCH TIME
14. WRITE SWITCH TIME
15. MODULE SELECT

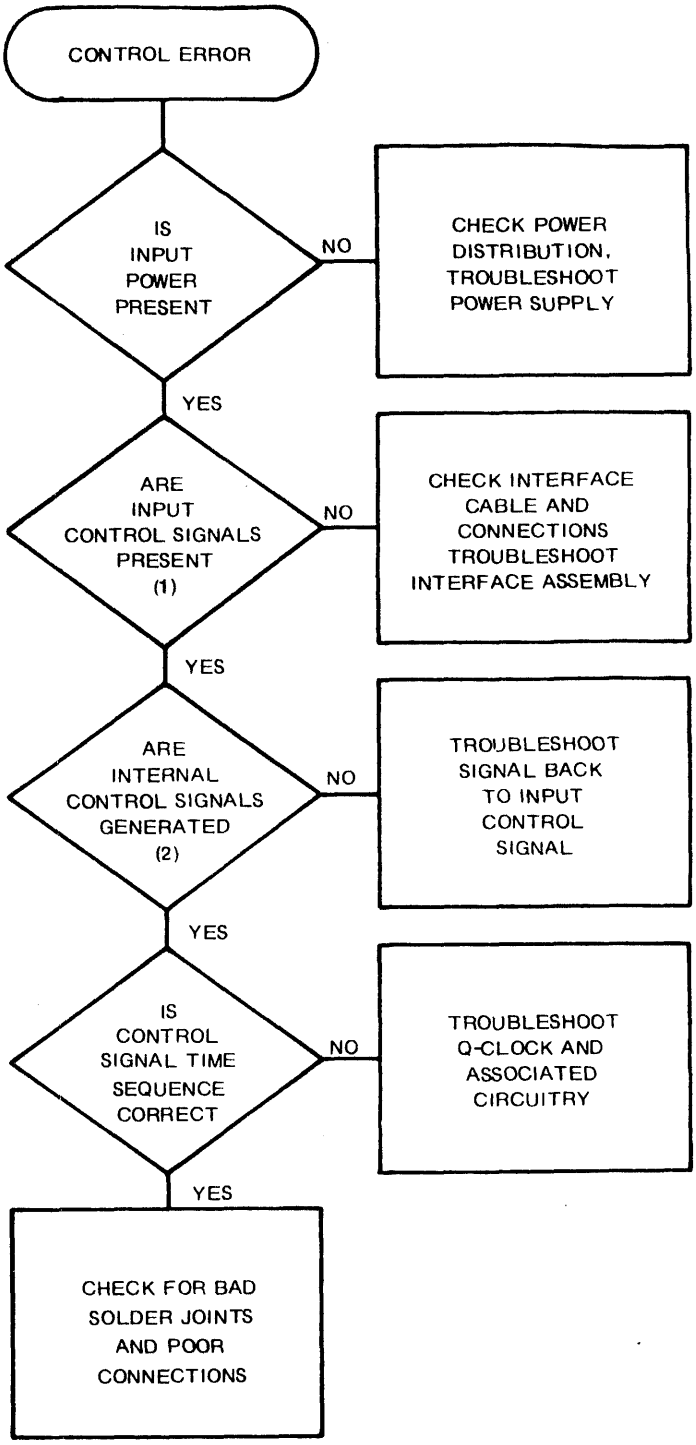

Figure 4-1
CONTROL ORIENTED ERRORS

ADDRESS ORIENTED ERRORS

Address oriented errors originate in the Current Drive section. All bits of a data word in error and addresses of errors with definite patterns are characteristics of address oriented errors. Use Figure 4-2 as an aid to troubleshooting. Figure 4-3 illustrates the configuration of the Core Arrays.

WORD LOCATION. Decode address bits 2^{13} and 2^{14} to identify the malfunctioning 12 bits of each 36 bit location in the Core Array. Table 4-1 and Figure 4-3 provide the corresponding bit positions for each decode. The remaining 13 address bits determine the location within the Core Array.

TABLE 4-1.–WORD LOCATION

EA0	EA1	4K-28K SYSTEM	8K-32K SYSTEM
0	0	BITS 0-11	CPU STACK
0	1	BITS 12-23	BITS 24-35
1	0	BITS 24-35	BITS 12-23
1	1	CPU STACK	BITS 0-11

Three 12 bit words are stored in each 36 bit location in the Core Array. Adjacent addresses reference adjacent locations in the Core Array. For example, with 4K of resident storage, bits 0-11 err only in the first 8K addresses, bits 12-23 err only in the second 8K addresses, bits 24-35 err only in third 8K addresses.

If the error is in the same bit position of every word, troubleshoot the data path on the Multiplex Assembly.

Interchange the two Digital Stack Assemblies. If the malfunction disappears, the cause was probably a poor connection. If the malfunction does not move, troubleshoot the connector and back panel wiring associated with the location of the malfunctioning assembly. If the malfunction follows the suspect module, troubleshoot the assembly to the circuit level.

CIRCUIT DECODING. Each Digital Stack Assembly identically decodes address bits 2^0 through 2^{12}. The address is broken down into significant X axis and Y axis digits and synthesized into Read and Write signals for each axis. Table 4-2 provides a procedure to determine the signals for the sample address 14605_8. The results of the procedure are listed in the summary. The page numbers refer to the schematics in the Reference Documents section. The underlined signals in Figure 3-2 relate to the circuit decoding example of Table 4-2.

ADDRESS ERROR SYMPTOMS

1. ALL BITS OF A DATA WORD ARE IN ERROR
2. ADDRESSES OF ERRORS HAVE DEFINITE PATTERN

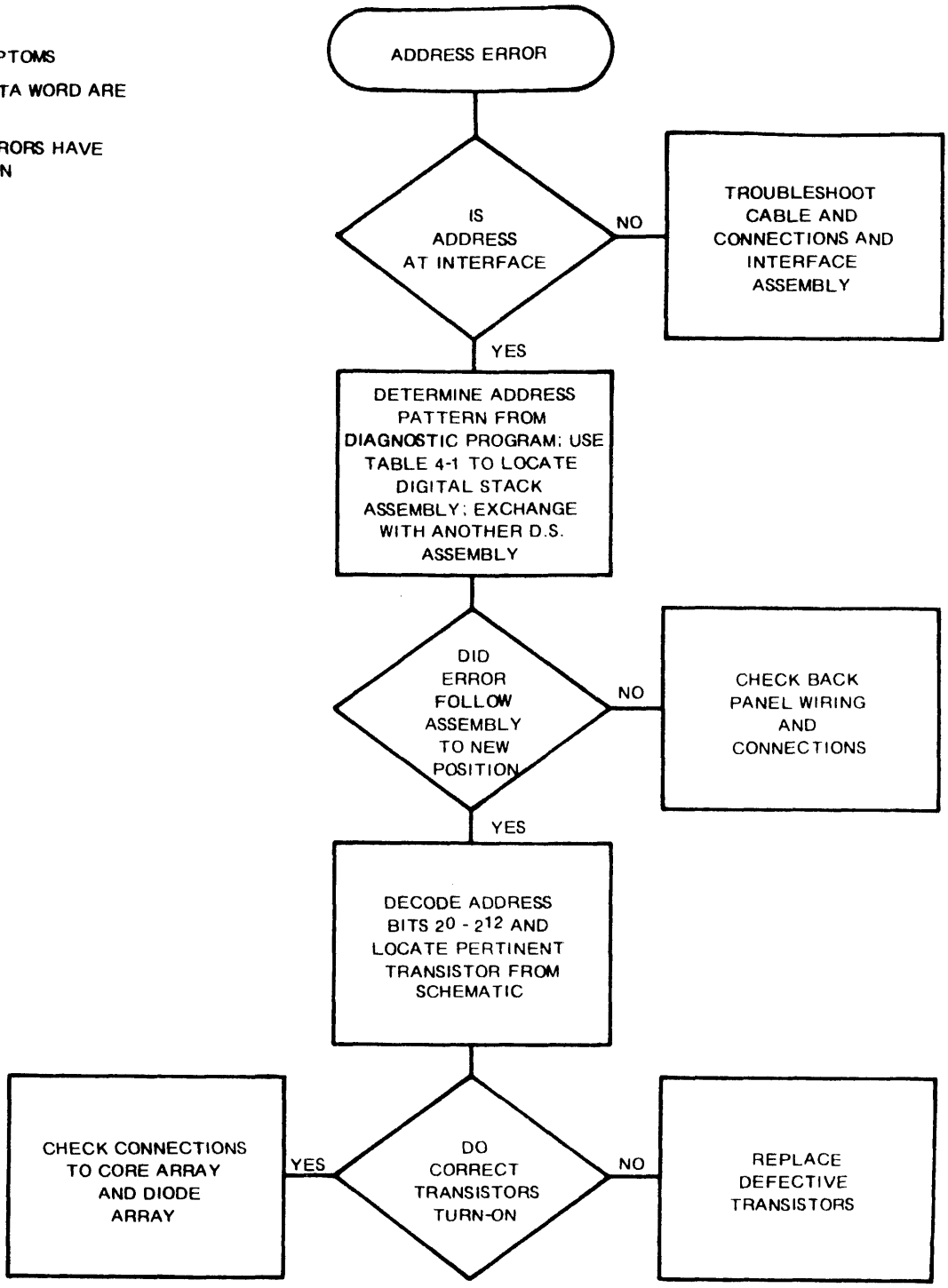

Figure 4-2
ADDRESS ORIENTED ERRORS

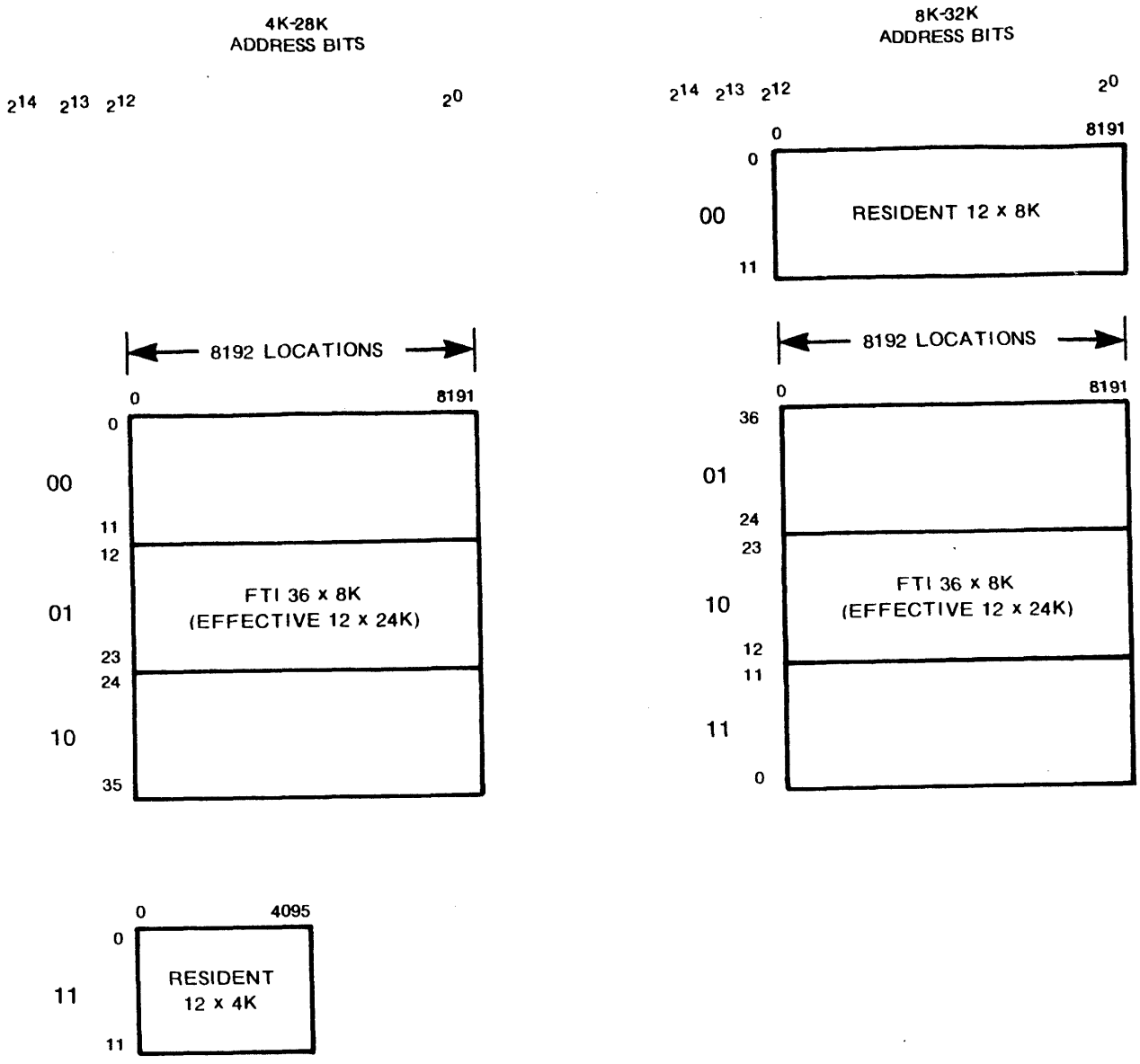

Figure 4-3
SYSTEM CONFIGURATION

Table 4-2.–CIRCUIT DECODING

X AXIS WRITE	XWR14XXX	XWRXXXX5
X AXIS READ	XRD14XXX	XRDXXXX5

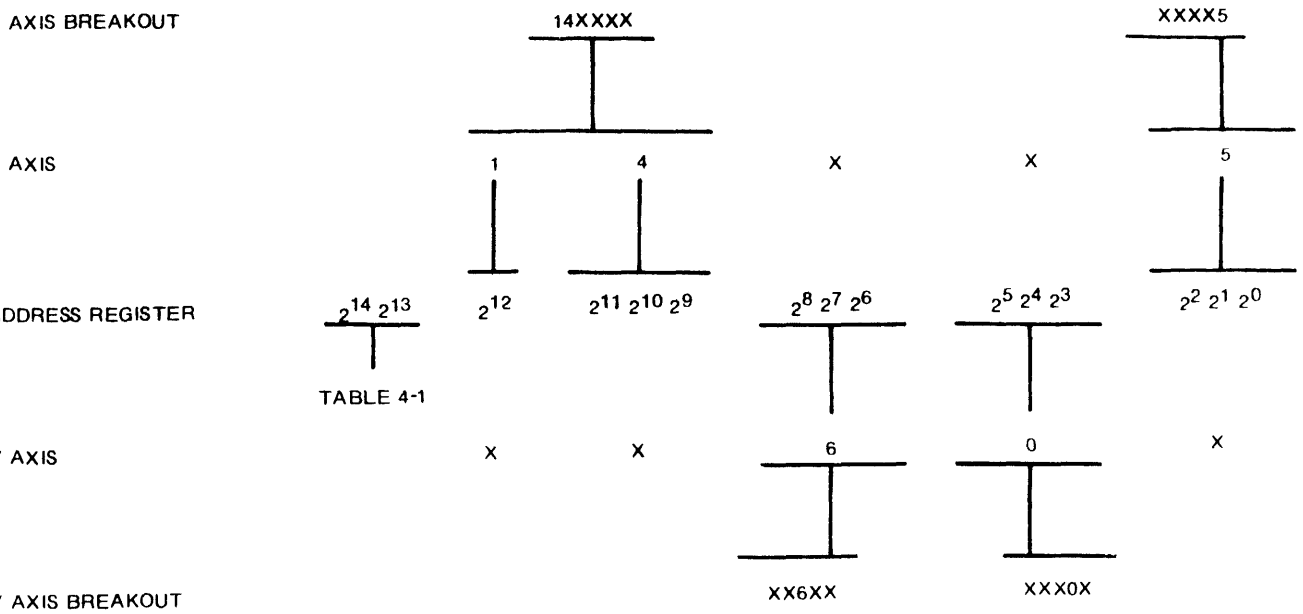

Y AXIS READ	YRDXX6XX	YRDXXX0X
Y AXIS WRITE	YWRXX6XX	YWRXXX0X

SUMMARY

SIGNAL	MEMORY ELECTRONICS ASSEMBLY SCHEMATIC PAGE	PIN NO.	TRANSISTOR
XRD14XXX	17	19	QM12
XRDXXXX5	12	53	QM1
XWR14XXX	19	3	QM14
XWRXXXX5	12	53	QM1
YRDXX6XX	19	9	Q28
YRDXXX0X	13	39	Q25
YWRXX6XX	17	13	QM13
YWRXXX0X	13	39	Q26

DATA ORIENTED ERRORS

Data oriented errors originate in the Data Loop. Errors occurring in the same bit position of data words during a Read or Write operation is characteristic of data oriented errors. Troubleshoot the inhibit driver and related circuits for errors during a Write operation; troubleshoot the sense amplifier and related circuits for errors during a Read operation. Use Figure 4-4 as a guide for troubleshooting data oriented errors.

MULTIPLEX ASSEMBLY FAILURES

Failures developed on the Multiplex Assembly while running the diagnostic programs occur in either the control signal circuitry or in the data path. Control signal failures affect all data paths identically. The control signals direct the data through the data path.

If errors occur in all data paths, troubleshoot the control signal section. If errors occur in specific paths, troubleshoot only those paths.

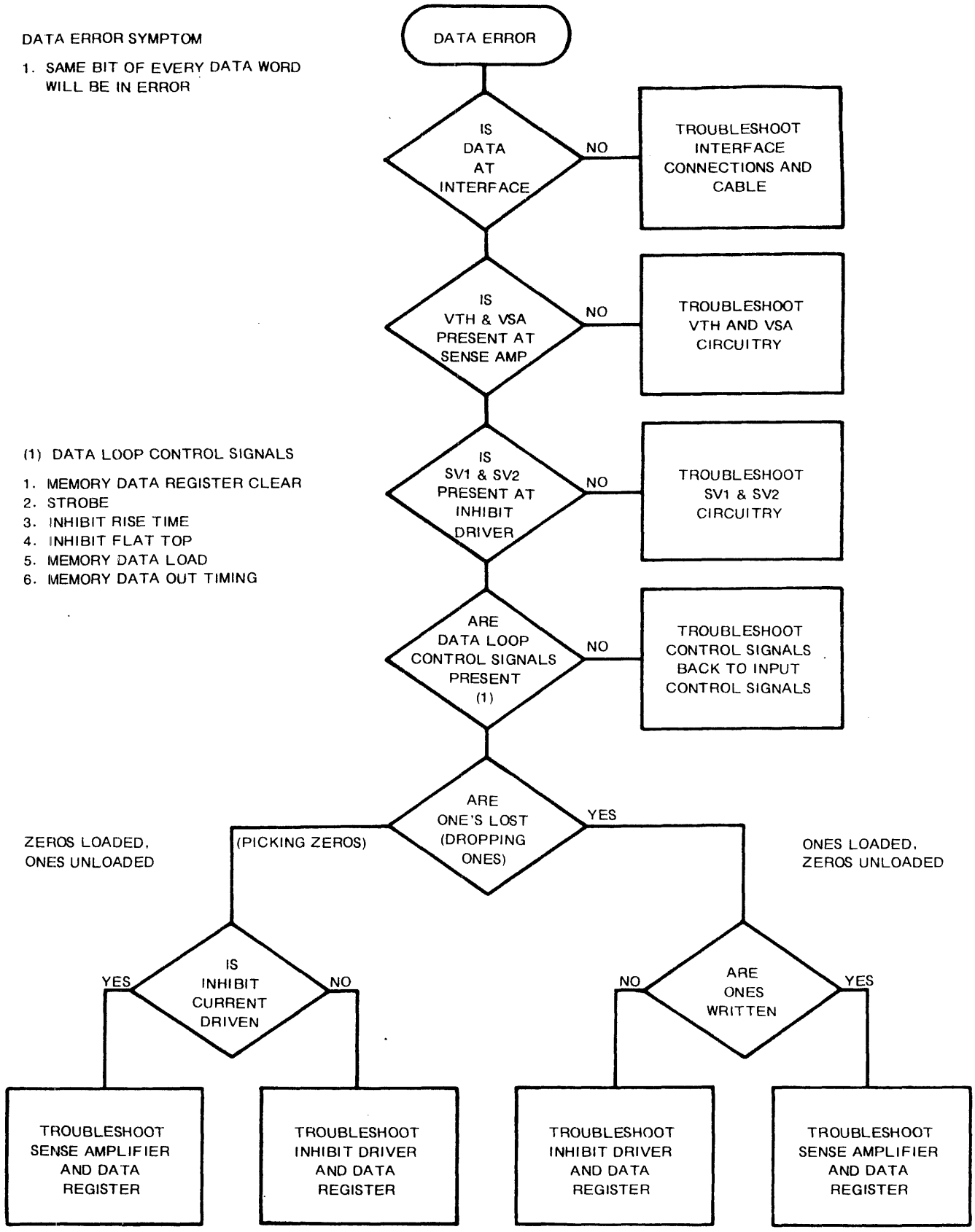

Figure 4-4
DATA ORIENTED ERRORS

SECTION V
REPLACEMENT PARTS LIST

This section lists the electronic components on the printed circuit assemblies. The component list for each assembly is in alphameric order. For each component the lists provide a reference designation, description, FABRI-TEK part number, manufacturer's part number, and quantity.

FABRI-TEK NUMBERS

When suppliers manufacture a component to FABRI-TEK specifications, the listed manufacturer's part number corresponds to the FABRI-TEK part number. These parts are available from the Memory Products Division of FABRI-TEK INCORPORATED.

FABRI-TEK PARTS

When ordering from a replacement parts list, specify the product number, system or assembly serial number, and FABRI-TEK part number.

REPLACEMENT PARTS LIST

ASSEMBLY NO. 190-1375-00
SCHEMATIC NO. 138-001706

MEMORY ASSEMBLY

REFERENCE DESIGNATION	COMPONENT DESCRIPTION	FABRI-TEK IDENT.NUMBER	MANUFACTURER AND IDENT.NUMBER	QUANTITY
C1,3,7,9,11,12	CAPACITOR, Fixed 150 UUF, ±2%, 500V Silver Mica	023-0472-00	Sangamo D105D151G0	6
C2,5,6,13,14,19, 20,39-47, 66-76, 79	CAPACITOR, Fixed 15 UF, ±20%, 20V Tantalum	023-0518-00	Dickson D15ZLX20M	28
C4,8,10	CAPACITOR, Fixed 100 UUF, ±2%, 500V Silver Mica	023-0471-00	Sangamo D105D101G0	3
C15,16,17,18,48-65,77,78	CAPACITOR, Fixed 0.01 UF, ±20%, 50V Ceramic	023-0455-00	Centralab UK50-103	24
C21-38	CAPACITOR, Fixed 220 UUF, ±2%, 300V Silver Mica	023-0469-00	Sangamo D105D221G0	18
C80-84	CAPACITOR, Fixed 0.01 UF, +80%-20%, 10V Ceramic	023-0362-00	Centralab UK10-103	5
CR1-109	DIODE, Switching 1N4607	022-0309-00	Fairchild 1N4607	109
L1,2	INDUCTOR 1.2 mh ± 0.2 mh @ 400 ma	019-0218-00	FABRI-TEK 019-0218-00	2
Q1,4,5,9,10,11, 12,13,14	TRANSISTOR, Similar to 2N2369	021-0121-00	FABRI-TEK 021-0121-00	9
Q2,3,6,7,8,19, 20,21,22,27,28, 29,30,35,54-71	TRANSISTOR, 2N4014	021-0223-00	Sprague 2N4014	32
Q15,16,17,18,23, 24,25,26,31,32, 33,34,36-53	TRANSISTOR, Similar to 2N3725	021-0137-00	FABRI-TEK 021-0137-00	30
QM1,2,3,5-14	INTEGRATED CIRCUIT Quad, High Current Core Driver	134-0214-00	Sprague UHP-021	13

REPLACEMENT PARTS LIST

MEMORY ASSEMBLY

ASSEMBLY NO. 190-1375-00
SCHEMATIC NO. 138-001706

REFERENCE DESIGNATION	COMPONENT DESCRIPTION	FABRI-TEK IDENT.NUMBER	MANUFACTURER AND IDENT.NUMBER	QUANTITY
R1,8,11,15,17, 26,32,43,201-254	RESISTOR, Fixed 470 Ohms, ±5%, 1/4 W Carbon Composition	108-0471-00	Allen-Bradley CB-4715	62
R2,91,92	RESISTOR, Fixed 1210 Ohms, ±1%, 1/8 W Film	201-1211-00	IRC RN55D1211F	3
R3,10,13,31,37, 46,48,111-128	RESISTOR, Fixed 220 Ohms, ±5%, 1/4 W Carbon Composition	108-0221-00	Allen-Bradley CB-2215	25
R4,16	RESISTOR, Fixed 330 Ohms, ±3%, 2.5 W Wirewound	106-0473-00	Dale NS2C-330 Ohms-3%	2
R5,7,18,19,30, 36,47,74,75,78, 79,81	RESISTOR, Fixed 1000 Ohms, ±5%, 1/4 W Carbon Composition	108-0102-00	Allen-Bradley CB-1025	12
R6,77,80,93-110	RESISTOR, Fixed 100 Ohms, ±5%, 1/4 W Carbon Composition	108-0101-00	Allen-Bradley CB-1015	21
R9,12,28,34,45	RESISTOR, Fixed *Ohms, ±1%, 1/8 W Film	201-0000-99	IRC RN55D*F	5
R14,40,53,183-200	RESISTOR, Fixed 4700 Ohms, ±5%, 1/4 W Carbon Composition	108-0472-00	Allen-Bradley CB-4725	21
R20	RESISTOR, Fixed 20 Ohms, ±1%, 2.5 W Wirewound	106-0472-00	Dale NS2C-20 Ohms-1%	1
R21,29,35	RESISTOR, Fixed 150 Ohms, ±5%, 1/4 W Carbon Composition	108-0151-00	Allen-Bradley CB-1515	3
R22,24	RESISTOR, Fixed 390 Ohms, ±5%, 1/4 W Carbon Composition	108-0391-00	Allen-Bradley CB-3915	2
	*Value selected during final checkout.			

REPLACEMENT PARTS LIST

MEMORY ASSEMBLY

ASSEMBLY NO. 190-1375-00
SCHEMATIC NO. 138-001706

REFERENCE DESIGNATION	COMPONENT DESCRIPTION	FABRI-TEK IDENT.NUMBER	MANUFACTURER AND IDENT.NUMBER	QUANTITY
R23,25	RESISTOR, Fixed 330 Ohms, ±5%, 1/4 W Carbon Composition	108-0331-00	Allen-Bradley CB-3315	2
R27	RESISTOR, Fixed 1070 Ohms, ±1%, 1/8 W Film	201-1071-00	IRC RN55D1071F	1
R33	RESISTOR, Fixed 1300 Ohms, ±1%, 1/8 W Film	201-1301-00	IRC RN55D1301F	1
R38,49,255	RESISTOR, Fixed 680 Ohms, ±5%, 1/4 W Carbon Composition	108-0681-00	Allen-Bradley CB-6815	3
R39,50,256	RESISTOR, Fixed 820 Ohms, ±5%, 1/4 W Carbon Composition	108-0821-00	Allen-Bradley CB-8215	3
R44	RESISTOR, Fixed 2700 Ohms, ±5%, 1/4 W Carbon Composition	108-0272-00	Allen-Bradley CB-2725	1
R54,55,57,58	RESISTOR, Fixed 270 Ohms, ±5%, 1/2 W Carbon Composition	101-0271-00	Allen-Bradley EB-2715	4
R56,59,62,63,64, 65	RESISTOR, Fixed 39 Ohms, ±5%, 1/4 W Carbon Composition	108-0390-00	Allen-Bradley CB-3905	6
R60,61	RESISTOR, Fixed 390 Ohms, ±5%, 1/2 W Carbon Composition	101-0391-00	Allen-Bradley EB-3915	2
R66,68,70,72	RESISTOR, Fixed 24 Ohms, ±3%, 2.5 W Wirewound	106-0478-00	Dale NS2C-24 Ohms-3%	4
R67,69,71,73	RESISTOR, Fixed 24 Ohms, ±3%, 5 W Wirewound	106-0471-00	Dale NS5-24 Ohms-3%	4
R76	RESISTOR, Fixed 2000 Ohms, ±5%, 1/4 W Carbon Composition	108-0202-00	Allen-Bradley CB-2025	1

REPLACEMENT PARTS LIST

ASSEMBLY NO. 190-1375-00
SCHEMATIC NO. 138-001706

MEMORY ASSEMBLY

REFERENCE DESIGNATION	COMPONENT DESCRIPTION	FABRI-TEK IDENT.NUMBER	MANUFACTURER AND IDENT.NUMBER	QUANTITY
R82-89,257	RESISTOR, Fixed 560 Ohms, ±5%, 1/2 W Carbon Composition	101-0561-00	Allen-Bradley EB-5615	9
R90	RESISTOR, Fixed 10 Ohms, ±5%, 1/2 W Carbon Composition	101-0100-00	Allen-Bradley EB-1005	1
R129-146	RESISTOR, Fixed 1000 Ohms, ±5%, 1/2 W Carbon Composition	101-0102-00	Allen-Bradley EB-1025	18
R147-164	RESISTOR, Fixed 8 Ohms, ±1%, 3 W Wirewound	106-0475-00	Dale NS2B-8 Ohms-1%	18
R165-182	RESISTOR, Fixed 100 Ohms, ±5%, 1/2 W Carbon Composition	101-0101-00	Allen-Bradley EB-1015	18
R258,259	RESISTOR, Fixed 750 Ohms, ±5%, 1/4 W Carbon Composition	108-0751-00	Allen-Bradley CB-7515	2
RM1-9	INTEGRATED ASSEMBLY Resistor Package	151-0002-00	Sprague 914C17	9
T1,2	INTEGRATED ASSEMBLY Transformer Package	151-0004-00	Sprague 23Z811	2
T3,21,23-31	INTEGRATED ASSEMBLY Transformer Package	151-0003-00	Sprague 914C17	11
T4-20,22	INTEGRATED ASSEMBLY Switch Transformer	151-0001-00	Sprague SK9072	18
U1,2,4,5,43-48	INTEGRATED CIRCUIT BCD to DEC DCDR-DRVR	134-0211-00	Texas Instruments SN74145N	10

REPLACEMENT PARTS LIST

MEMORY ASSEMBLY

ASSEMBLY NO. 190-1375-00
SCHEMATIC NO. 138-001706

REFERENCE DESIGNATION	COMPONENT DESCRIPTION	FABRI-TEK IDENT.NUMBER	MANUFACTURER AND IDENT.NUMBER	QUANTITY
U3,21,22,26,33	INTEGRATED CIRCUIT Triple, 3-Input NAND Gate	134-0167-00	Texas Instruments SN74H10N	5
U6,30	INTEGRATED CIRCUIT Triple, 3-Input Pos. AND Gate	134-0213-00	Texas Instruments SN74S11N	2
U7,36,42	INTEGRATED CIRCUIT HEX Inverter	134-0209-00	Texas Instruments SN74S04N	3
U8,9,10,11,32,37, 38,39,40,41	INTEGRATED CIRCUIT Quad, 2-Input NAND Buffer	134-0195-00	Texas Instruments SN7438N	10
U12,13,14	INTEGRATED CIRCUIT Dual Peripheral Pos. NAND Driver	134-0212-00	Texas Instruments SN75452P	3
U15,23,31	INTEGRATED CIRCUIT HEX Inverter	134-0173-00	Texas Instruments SN74H04N	3
U16,28	INTEGRATED CIRCUIT Dual, 4-Input NAND, Buffer-Driver	134-0205-00	Texas Instruments SN74S40N	2
U17,20	INTEGRATED CIRCUIT Dual, 4-Input NAND/NOR Gate	134-0206-00	Texas Instruments SN74S20N	2
U18,35	INTEGRATED CIRCUIT Triple, 3-Input NAND/NOR Gate	134-0168-00	Texas Instruments SN74H11N	2
U19,24,34	INTEGRATED CIRCUIT Quad, 2-Input NAND/NOR Gate	134-0165-00	Texas Instruments SN74H00N	3
U25, 49-66	INTEGRATED CIRCUIT Dual Driver	134-0189-00	Texas Instruments SN75451P	19
U27,29	INTEGRATED CIRCUIT Quad, 2-Input NAND/NOR Gate	134-0207-00	Texas Instruments SN74S00N	2

REPLACEMENT PARTS LIST

MEMORY ASSEMBLY

ASSEMBLY NO. 190-1375-00
SCHEMATIC NO. 138-001706

REFERENCE DESIGNATION	COMPONENT DESCRIPTION	FABRI-TEK IDENT.NUMBER	MANUFACTURER AND IDENT.NUMBER	QUANTITY
U67-75	INTEGRATED CIRCUIT Quad, 2-Input NAND/NOR Gate	134-0166-00	Texas Instruments SN74H01N	9
U76-93	INTEGRATED CIRCUIT Dual Comparator	134-0131-00	Fairchild U5F771139X (NA711C)	18

REPLACEMENT PARTS LIST

TIMING AND CONTROL MODULE

ASSEMBLY NO. 190-1376-00
SCHEMATIC NO. 138-001707

REFERENCE DESIGNATION	COMPONENT DESCRIPTION	FABRI-TEK IDENT.NUMBER	MANUFACTURER AND IDENT.NUMBER	QUANTITY
C1,4,5,7	CAPACITOR, Fixed 0.01 UF, ±20%, 50V Ceramic	023-0455-00	Centralab UK50-103	4
C2,3,9,10,11,12, 13,17,18,20,23, 24	CAPACITOR, Fixed 15 UF, ±20%, 20V Tantalum	023-0518-00	Dickson D15ZLX20M	12
C6,14,15,16	CAPACITOR, Fixed 220 UUF, ±2%, 500V Silver Mica	023-0469-00	Sangamo D105D221G0	4
C8,19	CAPACITOR, Fixed 33 UUF, ±20%, 1000V Ceramic	023-0128-00	Aerovox CK60BX330M	2
C21	CAPACITOR, Fixed 1.0 UF, ±10%, 35V Tantalum	023-0106-00	CS13AF010K	1
C22	CAPACITOR, Fixed 1000 UUF, ±20%, 1000V Ceramic	023-0132-00	CK60AW102M	1
C25	CAPACITOR, Fixed 390 UUF, ±2%, 100V Silver Mica	023-0465-00	CDE CD7FA391G03	1
CR1,2,3,4,5,6,8, 9,10,11	DIODE, Switching 1N4607	022-0309-00	Fairchild 1N4607	10
CR7	DIODE, Zener 5.1V	022-0018-00	Motorola 1N751A	1
Q1,2,3,4,5,6,7, 8,9,14,16,17,26, 31	TRANSISTOR, NPN 2N4014 Low Power Switching	021-0223-00	Sprague 2N4014	14
Q10,11,12,13,15, 18,19,20,21,22, 23,24,25,35	TRANSISTOR 2N3467	021-0224-00	Motorola 2N3467	14
Q27,28,29,30,32, 33,34,36,37,38	TRANSISTOR, Similar to 2N3725	021-0137-00	FABRI-TEK 021-0137-00	10

REPLACEMENT PARTS LIST

TIMING AND CONTROL MODULE

ASSEMBLY NO. 190-1376-00
SCHEMATIC NO. 138-001707

REFERENCE DESIGNATION	COMPONENT DESCRIPTION	FABRI-TEK IDENT.NUMBER	MANUFACTURER AND IDENT.NUMBER	QUANTITY
R1,2,22,25,26, 27,28,29,34,35, 64,67,72,73,88, 92,101,105,110, 113,117,118,119	RESISTOR, Fixed 1000 Ohms, ±5%, 1/4 W Carbon Composition	108-0102-00	Allen-Bradley CB-1025	23
R3,20,65,66	RESISTOR, Fixed 4700 Ohms, ±5%, 1/4 W Carbon Composition	108-0472-00	Allen-Bradley CB-4725	4
R4,8,10,12,14,16 18,36,38,40,42, 44,46,48,50,52, 54,56,58,60,62, 69,139	RESISTOR, Fixed 330 Ohms, ±5%, 1/4 W Carbon Composition	108-0331-00	Allen-Bradley CB-3315	23
R5,9,11,13,15, 17,19,37,39,41, 43,45,47,49,51, 53,55,57,59,61, 63,70,140	RESISTOR, Fixed 390 Ohms, ±5%, 1/4 W Carbon Composition	108-0391-00	Allen-Bradley CB-3915	23
R6,89,102,116	RESISTOR, Fixed 180 Ohms, ±5%, 1/4 W Carbon Composition	108-0181-00	Allen-Bradley CB-1815	4
R7,21,80,86,99	RESISTOR, Fixed 220 Ohms, ±5%, 1/4 W Carbon Composition	108-0221-00	Allen-Bradley CB-2115	5
R23,24,30,31,32, 33	RESISTOR, Fixed 2000 Ohms, ±5%, 1/4 W Carbon Composition	108-0202-00	Allen-Bradley CB-2025	6
R71,85,98	RESISTOR, Fixed 100 Ohms, ±5%, 1/4 W Carbon Composition	108-0101-00	Allen-Bradley CB-1015	3
R74	RESISTOR, Fixed 510 Ohms, ±5%, 1/4 W Carbon Composition	108-0511-00	Allen-Bradley CB-5115	1
R75	RESISTOR, Fixed 221 Ohms, ±1%, 1/4 W Film	202-2210-00	IRC RN60D2210F	1

REPLACEMENT PARTS LIST

TIMING AND CONTROL MODULE

ASSEMBLY NO. 190-1376-00
SCHEMATIC NO. 138-001707

REFERENCE DESIGNATION	COMPONENT DESCRIPTION	FABRI-TEK IDENT.NUMBER	MANUFACTURER AND IDENT.NUMBER	QUANTITY
R76,81,82,84,87, 97,100	RESISTOR, Fixed 39 Ohms, ±5%, 1/4 W Carbon Composition	108-0390-00	Allen-Bradley CB-3905	7
R77	RESISTOR, Fixed 82 Ohms, ±5%, 1/4 W Carbon Composition	108-0820-00	Allen-Bradley CB-8205	1
R78,130	RESISTOR, Fixed Value determined during final testing.	108-0000-99		2
R79	RESISTOR, Fixed 68 Ohms, ±5%, 1/4 W Carbon Composition	108-0680-00	Allen-Bradley CB-6805	1
R83,91,96,104	RESISTOR, Fixed 8 Ohms, ±1%, 3 W Wirewound	106-0475-00	Dale NS2B-8 Ohms-1%	4
R90,93,94,95,103, 106,107,108	RESISTOR, Fixed 10 Ohms, ±5%, 1/4 W Carbon Composition	108-0100-00	Allen-Bradley CB-1005	8
R109,111,112	RESISTOR, Fixed 470 Ohms, ±5%, 1/4 W Carbon Composition	108-0471-00	Allen-Bradley CB-4715	3
R114,115	RESISTOR, Fixed 910 Ohms, ±5%, 1/4 W Carbon Composition	108-0911-00	Allen-Bradley CB-9115	2
R120,125	RESISTOR, Fixed 150 Ohms, ±3%, 1 W Wirewound	106-0480-00	Dale NS-1A-150 Ohms-1W-3%	2
R121,137	RESISTOR, Fixed 910 Ohms, ±5%, 1/2 W Carbon Composition	101-0911-00	Allen-Bradley EB-9115	2
R122,123,124, 126,127,128	RESISTOR, Fixed 1.0 Ohms, ±5%, 1/2 W Carbon Composition	101-0109-00	Allen-Bradley EB-0105	6

REPLACEMENT PARTS LIST

TIMING AND CONTROL MODULE

ASSEMBLY NO. 190-1376-00
SCHEMATIC NO. 138-001707

REFERENCE DESIGNATION	COMPONENT DESCRIPTION	FABRI-TEK IDENT.NUMBER	MANUFACTURER AND IDENT.NUMBER	QUANTITY
R129	RESISTOR, Fixed 8250 Ohms, ±1%, 1/4 W Film	202-8251-00	IRC RN60D8251F	1
R131	RESISTOR, Fixed 2430 Ohms, ±1%, 1/4 W Film	202-2431-00	IRC RN60D2431F	1
R132	RESISTOR, Fixed 0.8 Ohm, ±3%, 1 W Wirewound	106-0481-00	Dale NS1A-0.8 Ohm-±3%-1W	1
R133,134,135, 136	RESISTOR, Fixed 4700 Ohms, ±5%, 1/2 W Carbon Composition	101-0479-00	Allen-Bradley EB-4715	4
R138	RESISTOR, Fixed 68 Ohms, ±5%, 1/4 W Carbon Composition	108-0680-00	Allen-Bradley CB-6805	1
RT1	THERMISTOR 100 Ohms, ±10% @ 25°C	037-0042-00	General Electric 2D204	1
T1	INTEGRATED ASSEMBLY Switch Transformer	151-0007-00	Sprague SK9093	1
T2,3	TRANSFORMER, Pulse	019-0223-00	FABRI-TEK 019-0223-00	2
U1,2,3,4,8,9,10, 12,13,14,18,20, 23,24,35	INTEGRATED CIRCUIT Dual, 4-Input NAND/NOR Gate	134-0171-00	Texas Instruments SN74H40N	15
U5,39,40,74,77	INTEGRATED CIRCUIT Triple, 3-Input NAND/NOR Gate	134-0168-00	Texas Instruments SN74H11N	5
U6,7,16,17,25,87	INTEGRATED CIRCUIT Dual, 4-Input NAND, Buffer-Driver	134-0205-00	Texas Instruments SN74S40N	6
U11,21,62	INTEGRATED CIRCUIT Dual, 4-Input AND Gate	134-0170-00	Texas Instruments SN74H21N	3

REPLACEMENT PARTS LIST

TIMING AND CONTROL MODULE

ASSEMBLY NO. 190-1376-00
SCHEMATIC NO. 138-001707

REFERENCE DESIGNATION	COMPONENT DESCRIPTION	FABRI-TEK IDENT.NUMBER	MANUFACTURER AND IDENT.NUMBER	QUANTITY
U15,19,22,73	INTEGRATED CIRCUIT HEX Inverter	134-0173-00	Texas Instruments SN74H04N	4
U26,56	INTEGRATED CIRCUIT HEX Inverter	134-0209-00	Texas Instruments SN74S04N	2
U27,28,29,30,31, 32,33,34,36,37	INTEGRATED CIRCUIT Dual, 2-Input AND/OR Inverter	134-0220-00	Texas Instruments SN74H51N	10
U38	INTEGRATED CIRCUIT Quad, 2-Input NAND Buffer	134-0195-00	Texas Instruments SN7438N	1
U41,42,53,54,63, 65	INTEGRATED CIRCUIT Dual, 4-Input NAND/NOR Gate	134-0169-00	Texas Instruments SN74H20N	6
U43,44,45,46,47, 48,61,71	INTEGRATED CIRCUIT Dual Flip-Flop Edge Triggered	134-0188-00	Texas Instruments SN74H74N	8
U51,52,57,58,89	INTEGRATED CIRCUIT Triple, 3-Input NAND Gate	134-0167-00	Texas Instruments SN74H10N	5
U55,64,66,68,83, 84,92	INTEGRATED CIRCUIT Quad, 2-Input NAND/NOR Gate	134-0165-00	Texas Instruments SN74H00N	7
U72	INTEGRATED CIRCUIT Dual Peripheral Pos. NAND Driver	134-0212-00	Texas Instruments SN75452P	1
U75,78	INTEGRATED CIRCUIT Triple, 3-Input Pos. AND Gate	134-0213-00	Texas Instruments SN74S11N	2
U79	INTEGRATED CIRCUIT Quad, 2-Input NAND/NOR Gate	134-0207-00	Texas Instruments SN74S00N	1
U82	INTEGRATED CIRCUIT HEX Inverter	134-0191-00	Texas Instruments SN74H05N	1

REPLACEMENT PARTS LIST

ASSEMBLY NO. 190-1376-00
SCHEMATIC NO. 138-001707

TIMING AND CONTROL MODULE

REFERENCE DESIGNATION	COMPONENT DESCRIPTION	FABRI-TEK IDENT.NUMBER	MANUFACTURER AND IDENT.NUMBER	QUANTITY
U86	INTEGRATED CIRCUIT Dual, 4-Input NAND/NOR Gate	134-0206-00	Texas Instruments SN74S20N	1
U93	INTEGRATED CIRCUIT Voltage Regulator	134-0255-00	National Semiconductor LM304	1

REPLACEMENT PARTS LIST

TERMINATION BOARD ASSEMBLY

ASSEMBLY NO. 190-1391-TAB*
SCHEMATIC NO. N/A

REFERENCE DESIGNATION	COMPONENT DESCRIPTION	FABRI-TEK IDENT.NUMBER	MANUFACTURER AND IDENT.NUMBER	QUANTITY
Component 1**	CAPACITOR, Fixed 15 UF, ±10%, 20V Tantalum	023-0105-00	Sangamo CS13BE156K	***
Component 2**	RESISTOR, Fixed 330 Ohms, ±5%, 1/4 W Carbon Composition	108-0331-00	Allen-Bradley CB-3315	***
Component 3**	RESISTOR, Fixed 390 Ohms, ±5%, 1/4 W Carbon Composition	108-0391-00	Allen-Bradley CB-3915	***

* 190-1391-TAB represents the following assemblies:

190-1391-01
190-1391-02
190-1391-03
190-1391-04

** Standard component reference designations not assigned.

*** Component quantity for each assembly TAB number.

COMPONENT	-01	-02	-03	-04
1	1	1	1	1
2	15	14	11	11
3	15	14	11	11

REPLACEMENT PARTS LIST

24K MULTIPLEX/8E ASSEMBLY

ASSEMBLY NO. 190-1601-00
SCHEMATIC NO. 138-001880

REFERENCE DESIGNATION	COMPONENT DESCRIPTION	FABRI-TEK IDENT.NUMBER	MANUFACTURER AND IDENT.NUMBER	QUANTITY
A1R2,A1R4,A1R6, A2R2,A2R4,A2R6, A2R8,A2R10, A2R12,A2R14,A3R2, A3R4,A3R6,A3R8, A3R10,A3R12,A4R2, A4R4,A4R6,A4R8, A4R10,A5R2,A6R2, A6R4,A6R6,A6R8, A6R10,A6R12, A6R14,A6R16, A7R2,A7R4,A7R6, A7R8,A7R10,A8R2, A8R4,A8R6,A8R8, A8R10,A8R12, A8R14,A9R2,A9R4, A9R6,A9R8,A9R10, A9R12,A10R2, A10R4,A10R6, B8R1,D1R1,D10R1, E9R1,F10R1, F10R3	RESISTOR, Fixed 390 Ohms, ±5%, 1/4 W Carbon Composition	108-0391-00	Allen-Bradley CB-3915	57
A7R11,D8R1,E8R1, F9R1	RESISTOR, Fixed 1K Ohms, ±5%, 1/4 W Carbon Composition	108-0102-00	Allen-Bradley CB-1025	4
E1R1,E2R1,E10R1	RESISTOR, Fixed 4.75K Ohms, ±1%, 1/8W Film	201-4751-00	Mepco RN55D4751F	3
E2R2,E3R1	RESISTOR, Fixed 8.25K Ohms, ±1%, 1/8W	201-8251-00	Mepco RN55D8251F	2
E9R2	RESISTOR, Fixed 10.0K Ohms, ±1%, 1/8W Film	201-1002-00	Mepco RN55D1002F	1
B1U1,B2U1,B3U1, B4U1,B5U1,B6U1, B7U1,B8U1,B9U1	INTEGRATED CIRCUIT Quad Latch	134-0197-00	Texas Instruments SN7475N	9
C1U1,C2U1,C3U1, C4U1,C5U1,C6U1, C7U1,C8U1,C9U1	INTEGRATED CIRCUIT Quad Selector/ Multiplexer	134-0263-00	Texas Instruments SN74157N	9

REPLACEMENT PARTS LIST

24K MULTIPLEX/8E ASSEMBLY

ASSEMBLY NO. 190-1601-00
SCHEMATIC NO. 138-001880

REFERENCE DESIGNATION	COMPONENT DESCRIPTION	FABRI-TEK IDENT.NUMBER	MANUFACTURER AND IDENT.NUMBER	QUANTITY
D1U1,D2U1,D5U1, D6U1,D8U1,D9U1	INTEGRATED CIRCUIT Dual Selector/ Multiplexer	134-0281-00	Texas Instruments SN74S153N	6
D3U1,D4U1,D7U1	INTEGRATED CIRCUIT Quad Exclusive OR	134-0185-00		3
E1U1,E2U1,E9U1	INTEGRATED CIRCUIT Dual Monostable Multivibrator	134-0198-00	Texas Instruments SN74123N	3
E3U1,E4U1,E6U1, E7U1,E8U1	INTEGRATED CIRCUTT Quad NAND OC	134-0195-00	Texas Instruments SN7438N	5
E5U1	INTEGRATED CIRCUIT Hex Inverter	134-0173-00	Texas Instruments SN74H04N	1
F8U1	INTEGRATED CIRCUIT BCD to DEC Decoder	134-0199-00	Texas Instruments SN7442N	1
F9U1	INTEGRATED CIRCUIT Dual D Flip-Flop	134-0188-00	Texas Instruments SN74H74N	1

REPLACEMENT PARTS LIST

ASSEMBLY NO. 250-0364-00
SCHEMATIC NO. 138-001700

STACK ELECTRICAL ASSEMBLY

REFERENCE DESIGNATION	COMPONENT DESCRIPTION	FABRI-TEK IDENT.NUMBER	MANUFACTURER AND IDENT.NUMBER	QUANTITY
*	RESISTOR, Fixed 470 Ohms, ±5%, 1/2 W Carbon Composition	101-0471-00	Allen-Bradley EB-4715	16
*	RESISTOR, Fixed 470 Ohms, ±5%, 1/4 W Carbon Composition	108-0471-00	Allen-Bradley CB-4715	96
*	DIODE ARRAY 16 Diodes per Array	022-0324-00	Texas Instruments TID126	24

*Reference designations not assigned.

REPLACEMENT PARTS LIST

ASSEMBLY NO. 256-0232-00

DIGITAL STACK ASSEMBLY

SCHEMATIC NO. N/A

REFERENCE DESIGNATION	COMPONENT DESCRIPTION	FABRI-TEK IDENT.NUMBER	MANUFACTURER AND IDENT.NUMBER	QUANTITY
*	*ASSEMBLY, Memory Printed Circuit Board	190-1375-00	FABRI-TEK 190-1375-00	1
*	*ASSEMBLY Stack, 8K x 18	250-0364-00	FABRI-TEK 250-0364-00	1

*Reference designations not assigned.

*Refer to the component lists for these assemblies.

SECTION VI
REFERENCE DOCUMENTS

DRAWING NUMBER	TITLE	PAGES
138-001700	Stack Electrical Assembly	1-4
138-001706	Memory Assembly	1-28
138-001707	Timing and Control Module	1-15
138-001880	24K Multiplex 8/I Assembly	1-12

E.C.O.	#1341 REV B
HIST.	REVISED & REDRAWN

1. UNLESS OTHERWISE SPECIFIED:
   A. ALL RESISTORS 1/4W, 5% AND IN OHMS.
   B. ALL DIODES 1N4607.
2. ← THIS SYMBOL REPRESENTS THE PINS WHICH ARE PART OF THE CORE ARRAY ASSEMBLY. IT INDICATES A MALE CONNECTOR. IT DOES NOT NECESSARILY INDICATE SIGNAL DIRECTION.
3. REFERENCE PAGE 3. THE RESISTORS IN PARALLEL WITH THE Y LINES ARE 470 OHMS, 5%, 1/4W, AND CARRY AN R DESIGNATION 100 HIGHER THEN THE Y LINE IT PARALLELS.
   EXAMPLE: Y LINE 5 IS PARALLELED BY R105.

REVISION STATUS OF SHEETS

A	B	C	B	END																													
1	2	3	4	5	6	7	8	9	10	11	12	13	14	15	16	17	18	19	20	21	22	23	24	25	26	27	28	29	30	31	32	33	34	35	36

APPROVED	DATE
R Rodgers	2/17/72

FABRI-TEK INC.
MEMORY PRODUCTS DIVISION

TITLE	SCHEMATIC CORE ARRAY ASSEMBLY			
DWG. NO. C	138-001700	MODEL	VERS.	PAGE 1 OF 4

E.C.O. HIST. #1 : 3 : 1 REV B

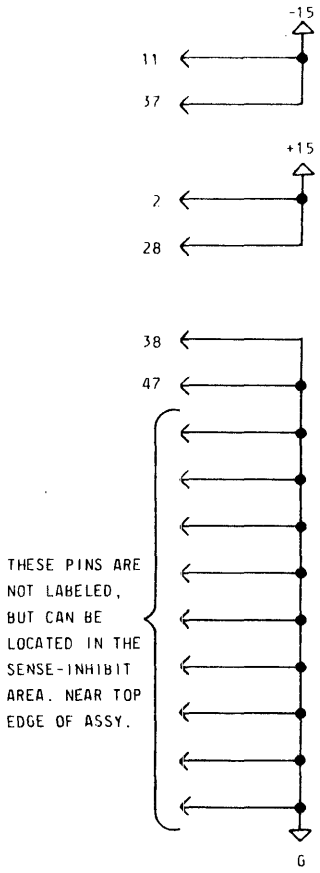

FABRI-TEK INC.
MEMORY PRODUCTS DIVISION

TITLE				
SCHEMATIC CORE ARRAY ASSEMBLY				
DWG. NO. C	138-001700	MODEL	VERS.	PAGE 2

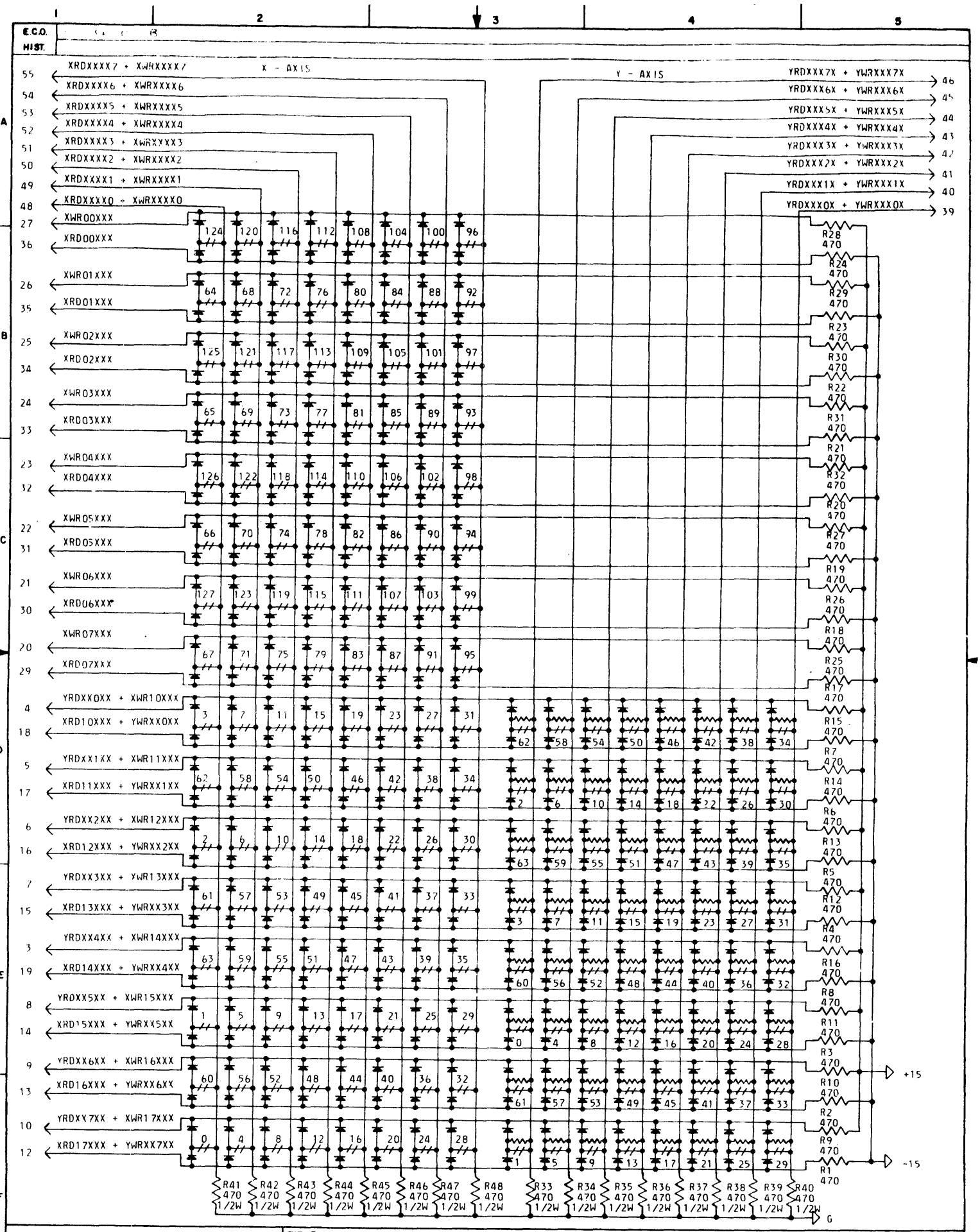

FABRI-TEK INC. MEMORY PRODUCTS DIVISION	TITLE: SCHEMATIC CORE ARRAY ASSEMBLY			
	DWG. NO. C 138-001700	MODEL	VERS.	PAGE 3

E.C.O.	#15341 REV B
HIST.	

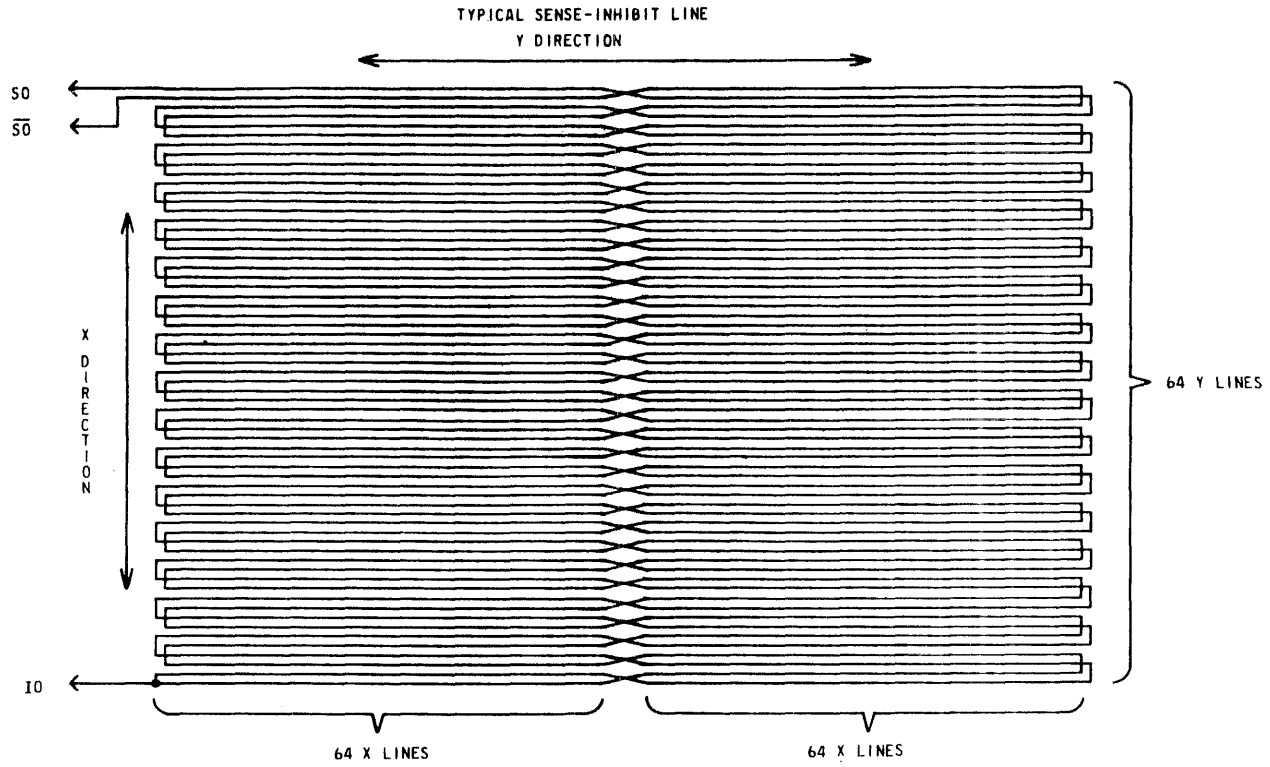

FABRI-TEK INC. MEMORY PRODUCTS DIVISION	TITLE: SCHEMATIC CORE ARRAY ASSEMBLY			
	DWG. NO. C 138-001700	MODEL	VERS.	PAGE 4

E.C.O. HIST.	# 15342	ECO 15923	EC 15935	EC 16339	EC 17034	EC 17634	EC 18049	EC 18316
	A	B	00C	00D	01E	01F	01G	01H

1. UNLESS OTHERWISE SPECIFIED:
   A. ALL RESISTORS 1/4W, 5% AND IN OHMS.
   B. ALL CAPACITORS IN MICROFARADS.
   C. ALL TRANSISTORS 2N4014.
   D. ALL DIODES 1N4607.
2. LAST REFERENCE DESIGNATION USED C84, CR109, Q71, R259, U93, T31, L2, QM14, RM9.
3. RESISTOR DESIGNATION R45 WAS NOT USED.
4. TRANSISTOR MODULE DESIGNATION QM4 WAS NOT USED.
5. ← THIS SYMBOL REPRESENTS THE CARD EDGE CONNECTOR. IT INDICATES A MALE CONNECTOR. IT DOES NOT NECESSARILY INDICATE SIGNAL DIRECTION.
6. ⟩— THIS SYMBOL REPRESENTS THE FEMALE CONNECTOR PINS MOUNTED ON THE MEMORY BOARD. THE STACK PLUGS INTO THESE PINS.
7. ▶— THIS SYMBOL WILL BE FOUND ON THE LEFT BORDER. IT INDICATES DIRECTION OF SIGNAL FLOW. TO THE LEFT OF THE ARROWHEAD WILL BE THE SIGNAL MNEMONIC, EXAMPLE: MODS, AND THE POINT OF ORIGIN CODE. EXAMPLE: 4U26-8

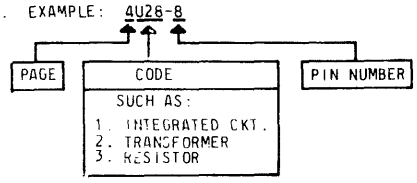

8. —▶ THIS SYMBOL WILL BE FOUND ON THE RIGHT BORDER. IT INDICATES DIRECTION OF SIGNAL FLOW. TO THE RIGHT OF THE ARROWHEAD WILL BE THE FULL ENGLISH NAME, IF IT IS THE ORIGIN OF A NEW SIGNAL, AND THE LETTERS UNDERLINED THAT WILL MAKE UP THE MNEMONIC. EXAMPLE: MODULE SELECT. A LIST OF ALL DESTINATIONS WILL BE PRESENT.

CODE	MANUFACTURER'S PART NUMBER	FTI PART NUMBER
711	SN72711L	134-0131-00
38	SN7438N	134-0195-00
145	SN74145N	134-0211-00
H00	SN74H00N	134-0165-00
H01	SN74H01N	134-0166-00
H04	SN74H04N	134-0173-00
H10	SN74H10N	134-0167-00
H11	SN74H11N	134-0168-00
S00	SN74S00N	134-0207-00
S04	SN74S04N	134-0209-00
S11	SN74S11N	134-0213-00
S20	SN74S20N	134-0206-00
S40	SN74S40N	134-0205-00
451	SN75451AN	134-0189-00
452	SN75452N	134-0212-00

TRANSFORMER BREAKDOWN BY REFERENCE DESIGNATION

T4, T5, T6, T7, T8, T9, T10, T11, T12, T13, T14, T15, T16, T17, T18, T19, T20, T22.	151-0001-00
T3, T21, T23, T31.	151-0003-00
T1, T2.	151-0004-00

INDUCTOR BREAKDOWN BY REFERENCE DESIGNATION.

L1, L2.	019-0218-00

TRANSISTOR MODULE BREAKDOWN BY REFERENCE DESIGNATION

QM1, QM2, QM3, QM5, QM6, QM7, QM8, QM9, QM10, QM11, QM12, QM13, QM14.	134-0214-00

RESISTOR MODULE BREAKDOWN BY REFERENCE DESIGNATION

RM1, RM2, RM3, RM4, RM5, RM6, RM7, RM8, RM9.	151-0002-00

REVISION STATUS OF SHEETS

	1	2	3	4	5	6	7	8	9	10	11	12	13	14	15	16	17	18	19	20	21	22	23	24	25	26	27	28	29	30	31	32	33	34	35	36
01H						01H	01H																													
01G																				01G	01G	01G	01G	01G	01G	01G	01G	01G								
01F																				01F	01F	01F	01F	01F	01F	01F	01F	01F								
01E	-	-	-	-	-	-	-	-	-	01E	-	-	-	-	-	-	-	-	-	-	-	-	-	01E	01E	-	-	-	-							
00D	D	-	B	-	B	-	B	-	B	-	-	-	-	-	-	-	-	-	-	-	-	-	-	-	-	-	-	-								
00C	00C	/	B	/	B	/	B	/	B	-	-	-	-	-	-	-	-	-	-	-	-	-	-	-	-	-	-	-								
B	A	/	B	/	B	/	B	/	B	-	-	-	-	-	-	-	-	-	-	-	-	-	-	-	-	-	-	-								
A	A	-	A	-	A	-	-	-	-	-	-	-	-	-	-	-	-	-	-	-	-	-	-	-	-	-	-	END								
	1	2	3	4	5	6	7	8	9	10	11	12	13	14	15	16	17	18	19	20	21	22	23	24	25	26	27	28	29	30	31	32	33	34	35	36

APPROVED R. Ling. DATE 2/10/72

FABRI-TEK INC.
MEMORY PRODUCTS DIVISION

TITLE SCHEMATIC MEMORY ELECTRONICS ASSEMBLY

DWG. NO. C 138-001706 | MODEL | VERS. | PAGE 1 OF 28

E.C.O.	# 15342	EC 16339
MISC.	A	D

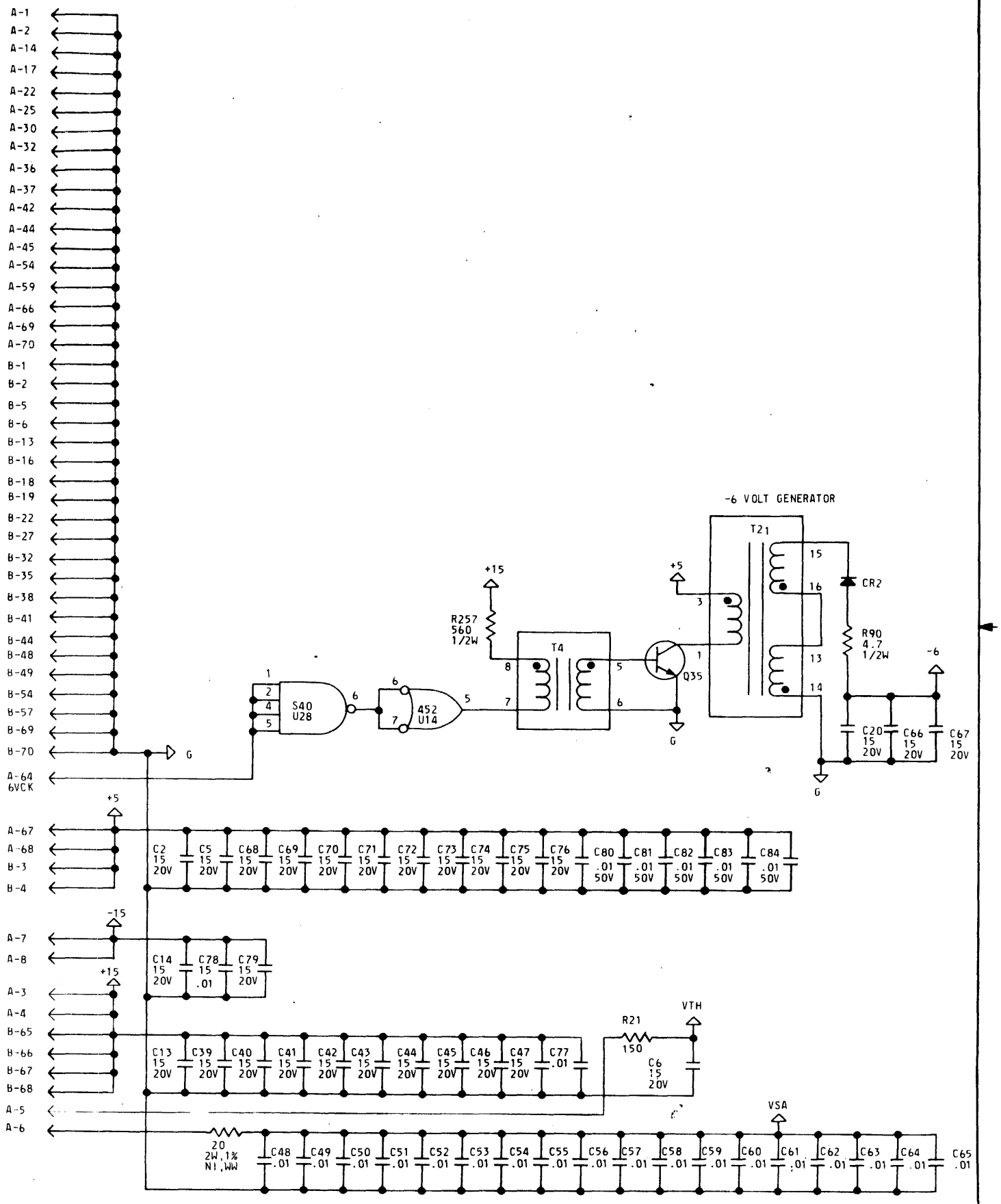

FABRI-TEK INC. MEMORY PRODUCTS DIVISION	TITLE: SCHEMATIC MEMORY ELECTRONICS ASSEMBLY			
	DWG. NO. C 138-001706	MODEL	VERS.	PAGE 2

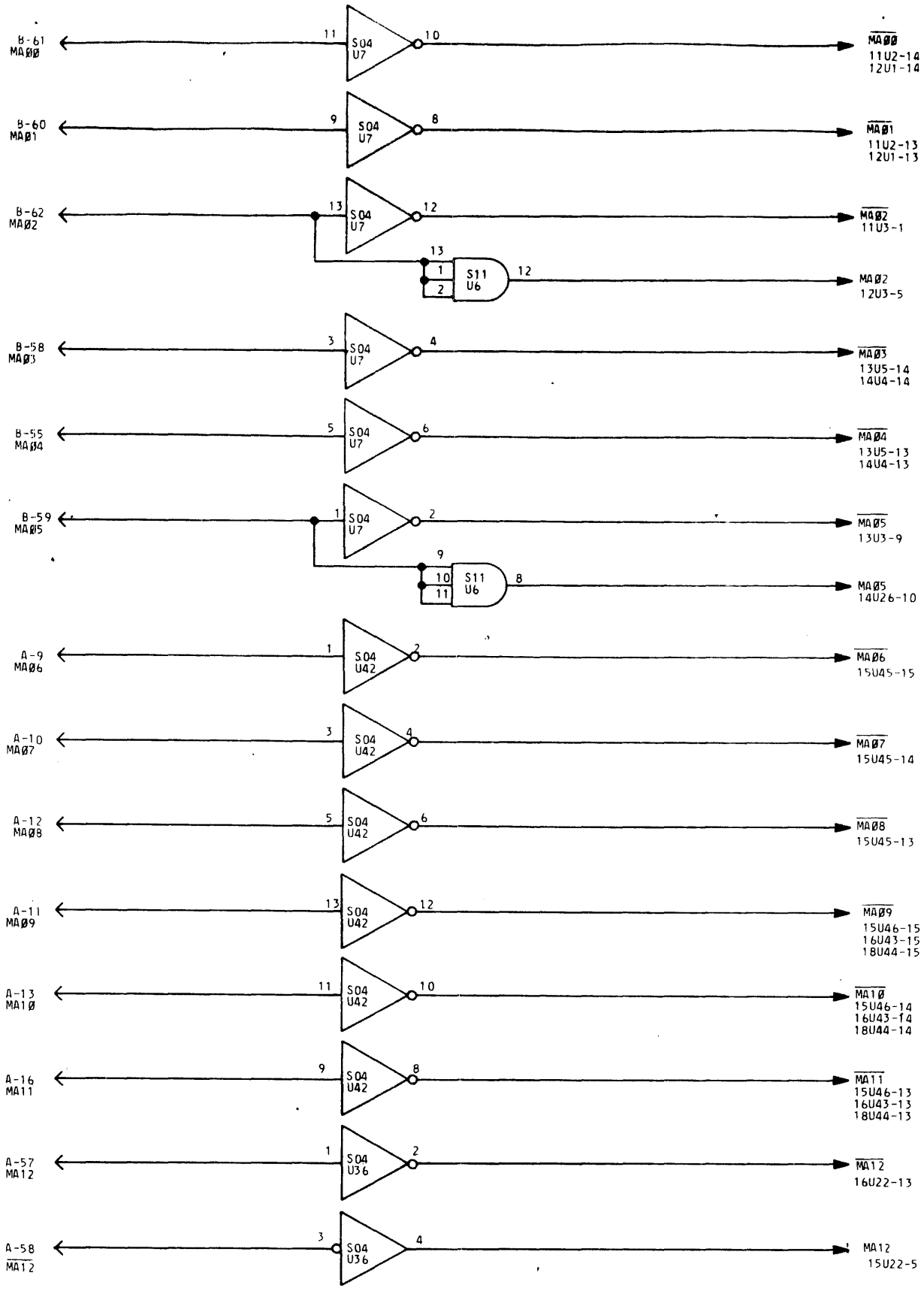
B-61 MAØØ
11
S04 U7
10
$\overline{MAØØ}$ 11U2-14 12U1-14
B-60 MAØ1
9
S04 U7
8
$\overline{MAØ1}$ 11U2-13 12U1-13
B-62 MAØ2
13
S04 U7
12
$\overline{MAØ2}$ 11U3-1
13
1
2
S11 U6
12
MAØ2 12U3-5
B-58 MAØ3
3
S04 U7
4
$\overline{MAØ3}$ 13U5-14 14U4-14
B-55 MAØ4
5
S04 U7
6
$\overline{MAØ4}$ 13U5-13 14U4-13
B-59 MAØ5
1
S04 U7
2
$\overline{MAØ5}$ 13U3-9
9
10
11
S11 U6
8
MAØ5 14U26-10
A-9 MAØ6
1
S04 U42
2
$\overline{MAØ6}$ 15U45-15
A-10 MAØ7
3
S04 U42
4
$\overline{MAØ7}$ 15U45-14
A-12 MAØ8
5
S04 U42
6
$\overline{MAØ8}$ 15U45-13
A-11 MAØ9
13
S04 U42
12
$\overline{MAØ9}$ 15U46-15 16U43-15 18U44-15
A-13 MA1Ø
11
S04 U42
10
$\overline{MA1Ø}$ 15U46-14 16U43-14 18U44-14
A-16 MA11
9
S04 U42
8
$\overline{MA11}$ 15U46-13 16U43-13 18U44-13
A-57 MA12
1
S04 U36
2
$\overline{MA12}$ 16U22-13
A-58 $\overline{MA12}$
3
S04 U36
4
MA12 15U22-5

E.C.O.	#15342	ECO 15923
HIST.	A	REV B

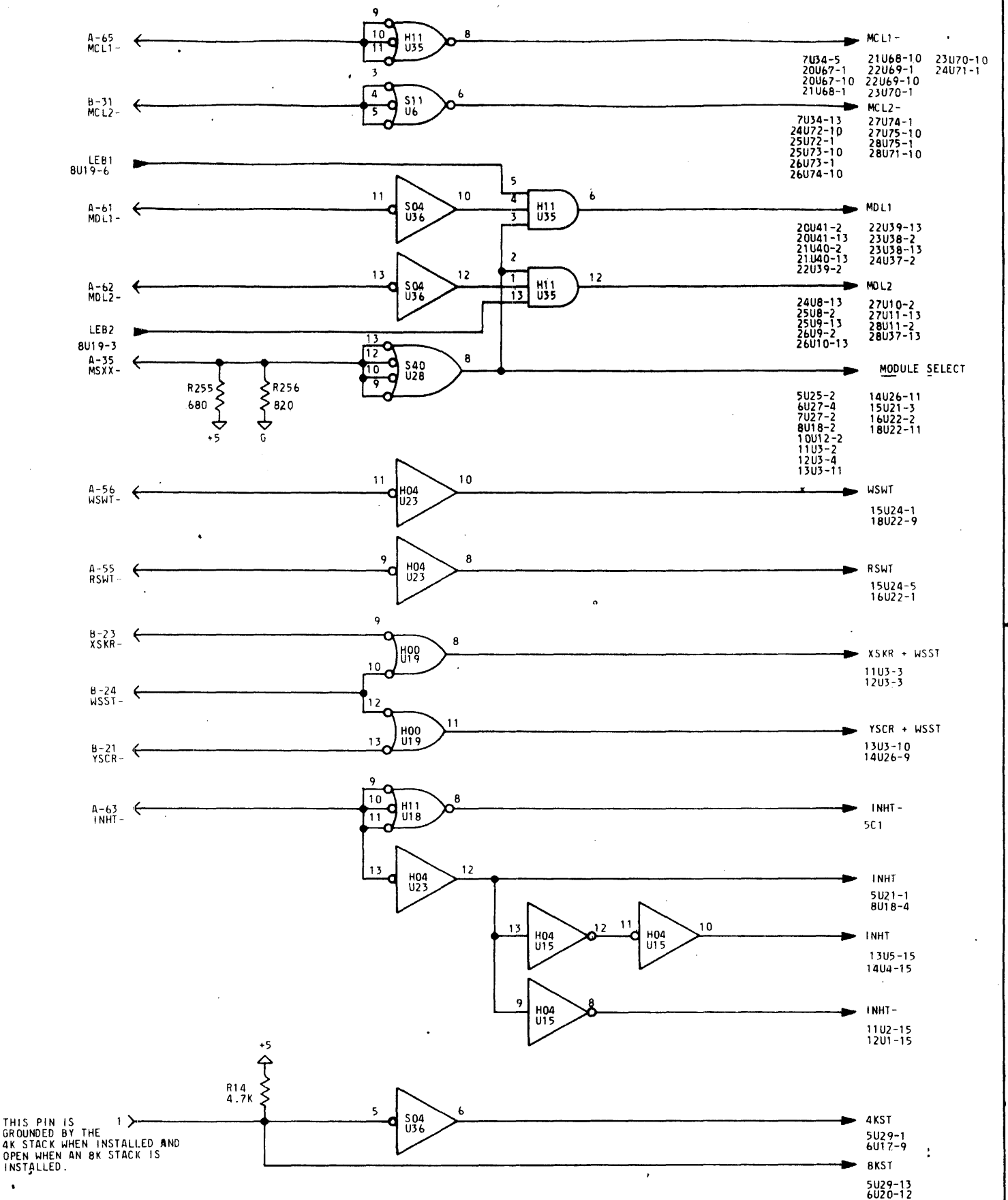

FABRI-TEK INC. MEMORY PRODUCTS DIVISION	TITLE: SCHEMATIC MEMORY ELECTRONICS ASSEMBLY			
	DWG. NO. C, 138-001706	MODEL	VERS.	PAGE 4

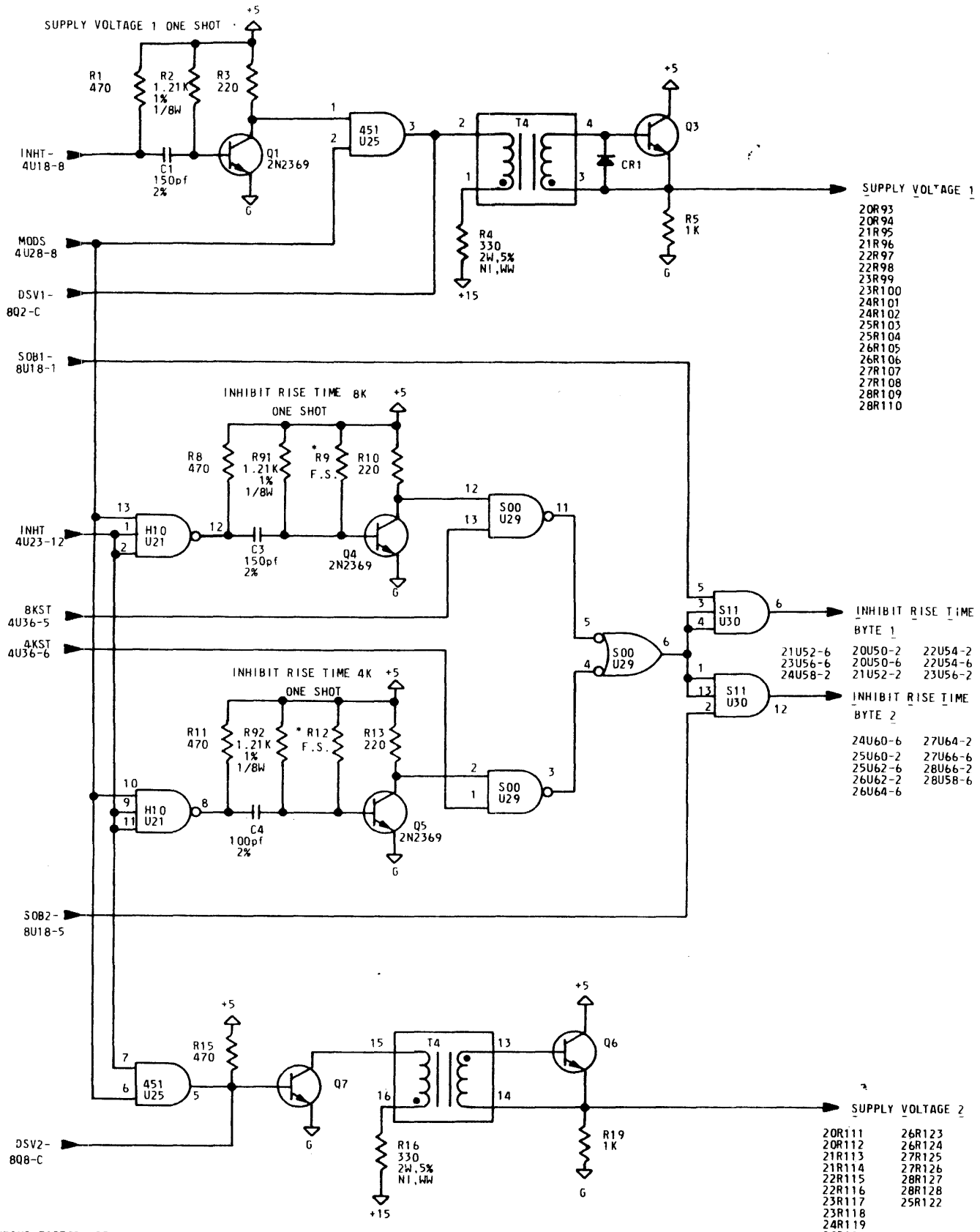

* F.S. MEANS FACTORY SELECT. THE VALUE OF THIS RESISTOR IS DETERMINED BY THE FACTORY DURING TEST.

E.C.O.	#15342	ECO 15725	REV 01H
HIST.	A	REV B	

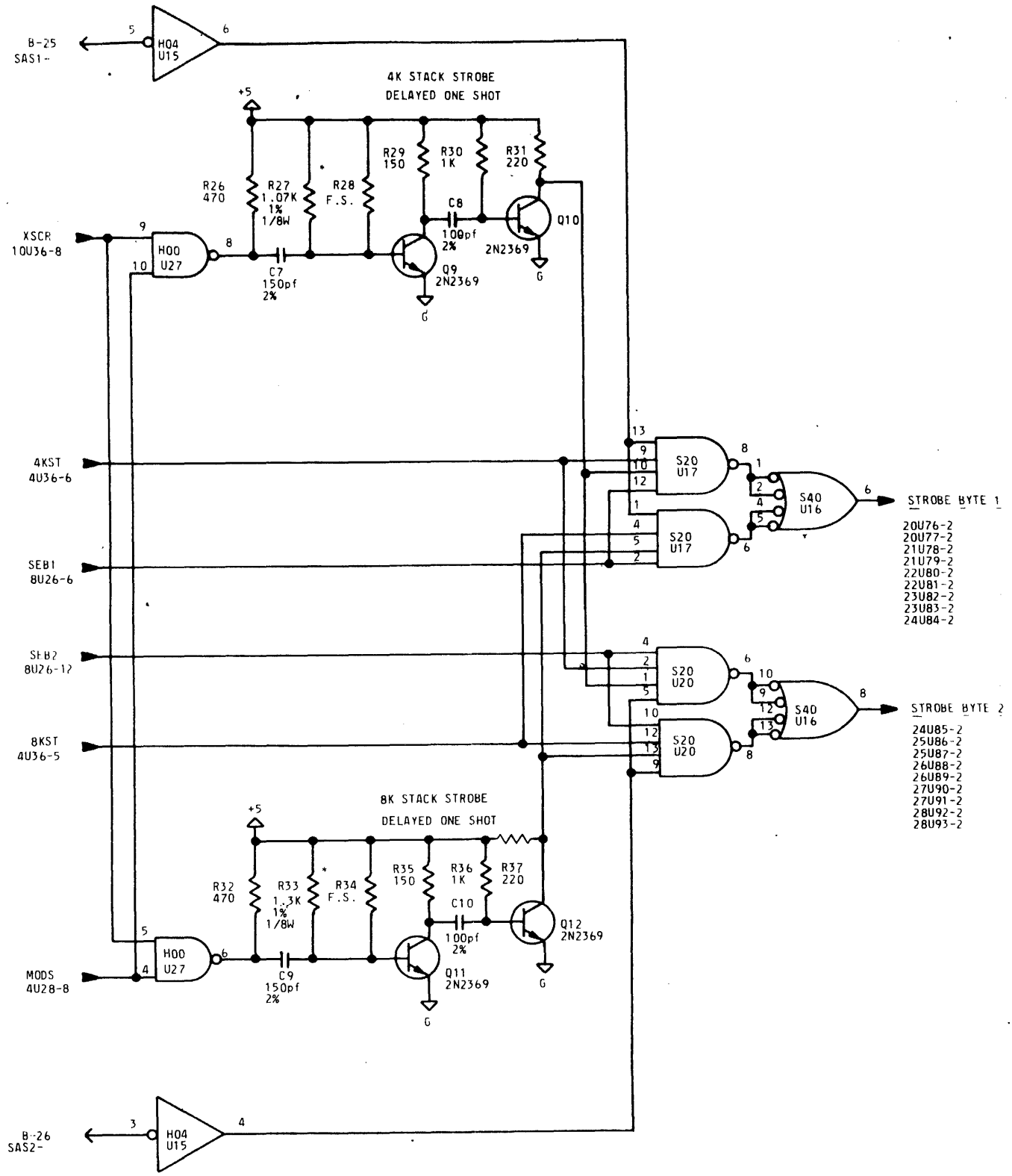

* F.S. MEANS FACTORY SELECT. THE VALUE OF THIS RESISTOR IS DETERMINED BY THE FACTORY DURING TEST.

FABRI-TEK INC. MEMORY PRODUCTS DIVISION	TITLE: SCHEMATIC MEMORY ELECTRONICS ASSEMBLY			
	DWG. NO. C: 138-001706	MODEL	VERS.	PAGE: 6

E.C.O. REV 01H
HIST.

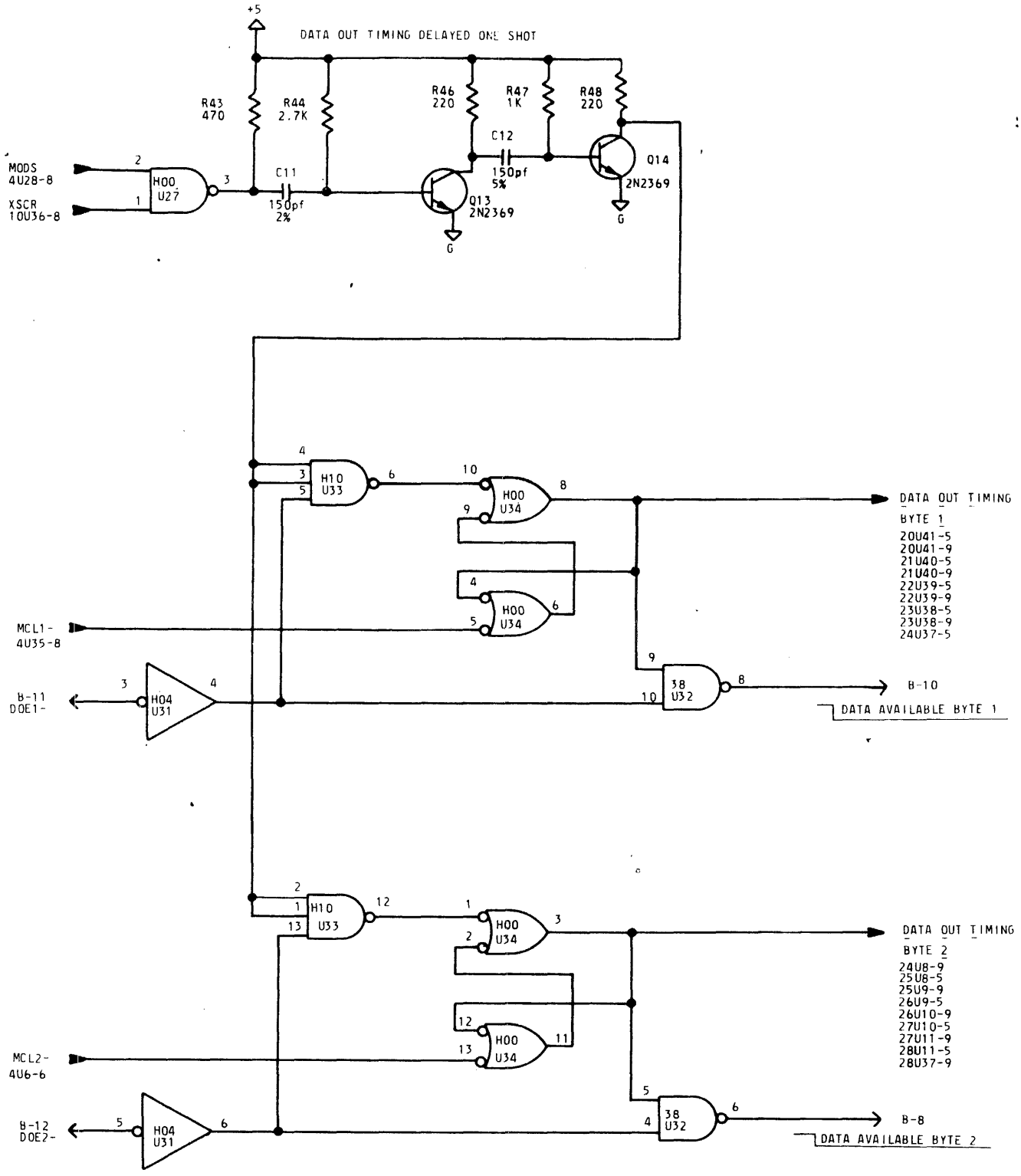

FABRI-TEK INC. MEMORY PRODUCTS DIVISION	TITLE SCHEMATIC MEMORY ELECTRONICS ASSEMBLY			
	DWG. NO. C 138-001706	MODEL	VERS.	PAGE 7

E.C.O.	[illegible] REV 3
HIST.	

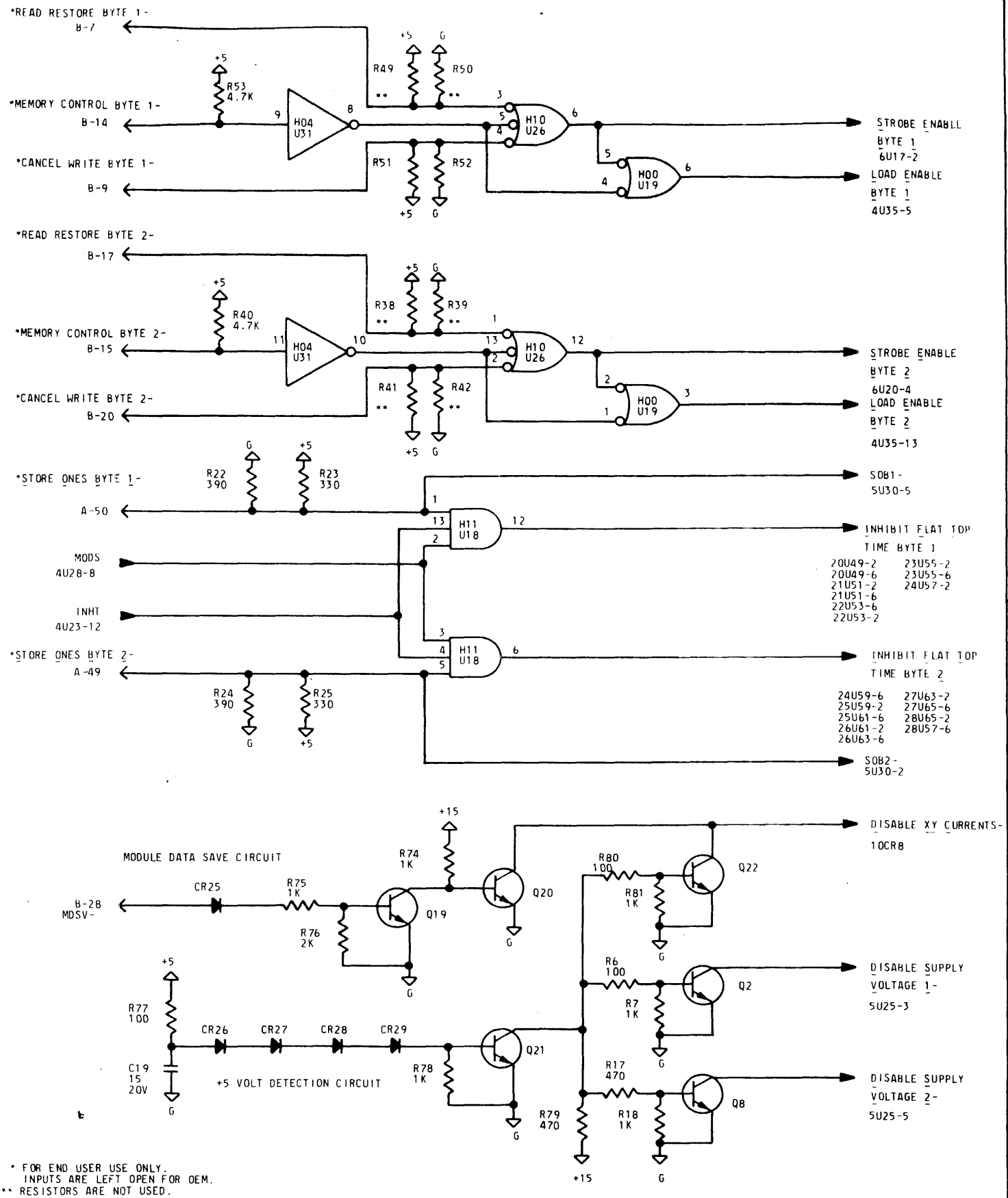

* FOR END USER USE ONLY.
INPUTS ARE LEFT OPEN FOR OEM.
** RESISTORS ARE NOT USED.

FABRI-TEK INC. MEMORY PRODUCTS DIVISION	TITLE: SCHEMATIC MEMORY ELECTRONICS ASSEMBLY			
	DWG. NO. C: 138-001706	MODEL	VERS.	PAGE: 8

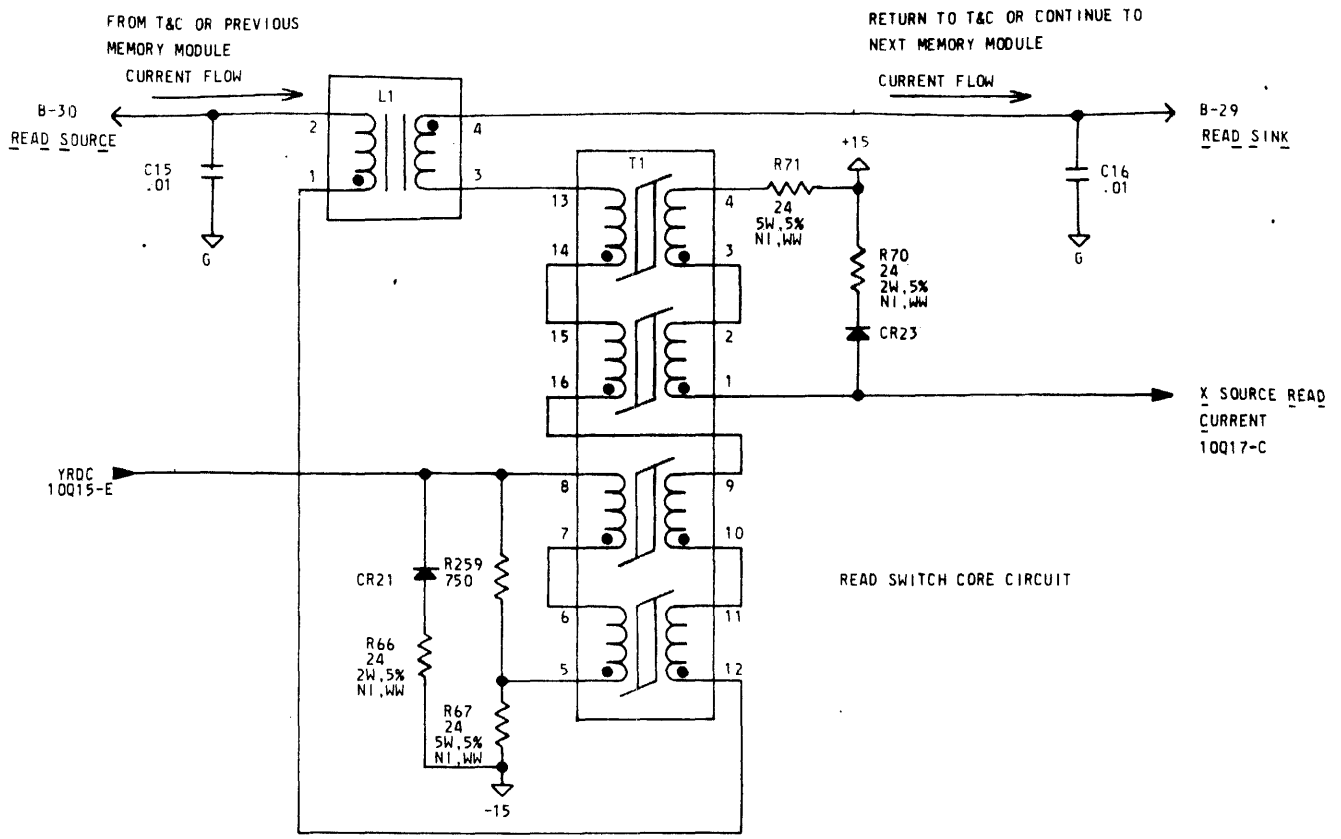

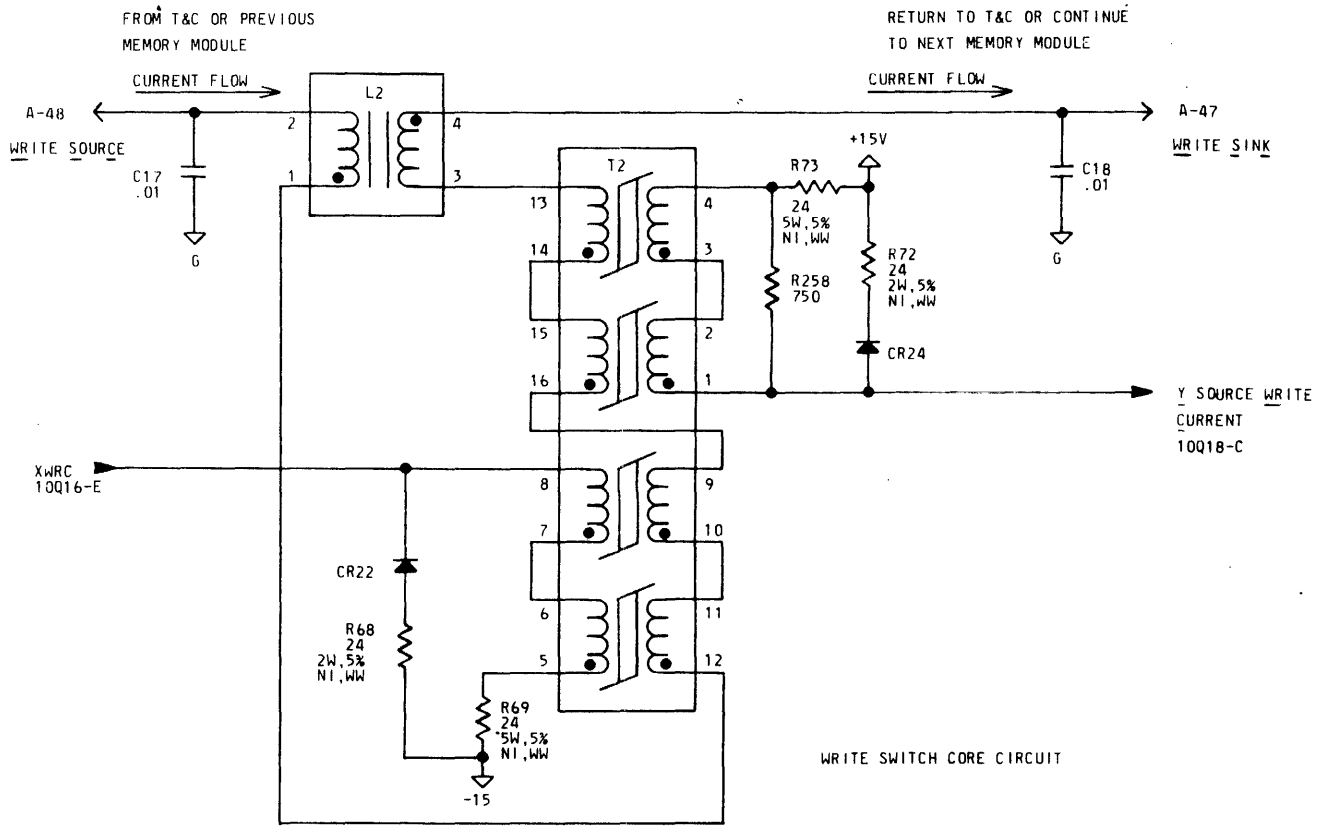

FABRI-TEK INC. MEMORY PRODUCTS DIVISION	TITLE: SCHEMATIC MEMORY ELECTRONICS ASSEMBLY			
	DWG. NO. C 138-001706	MODEL	VERS.	PAGE 9

E.C.O.	ECO 15723
HIST.	REV B

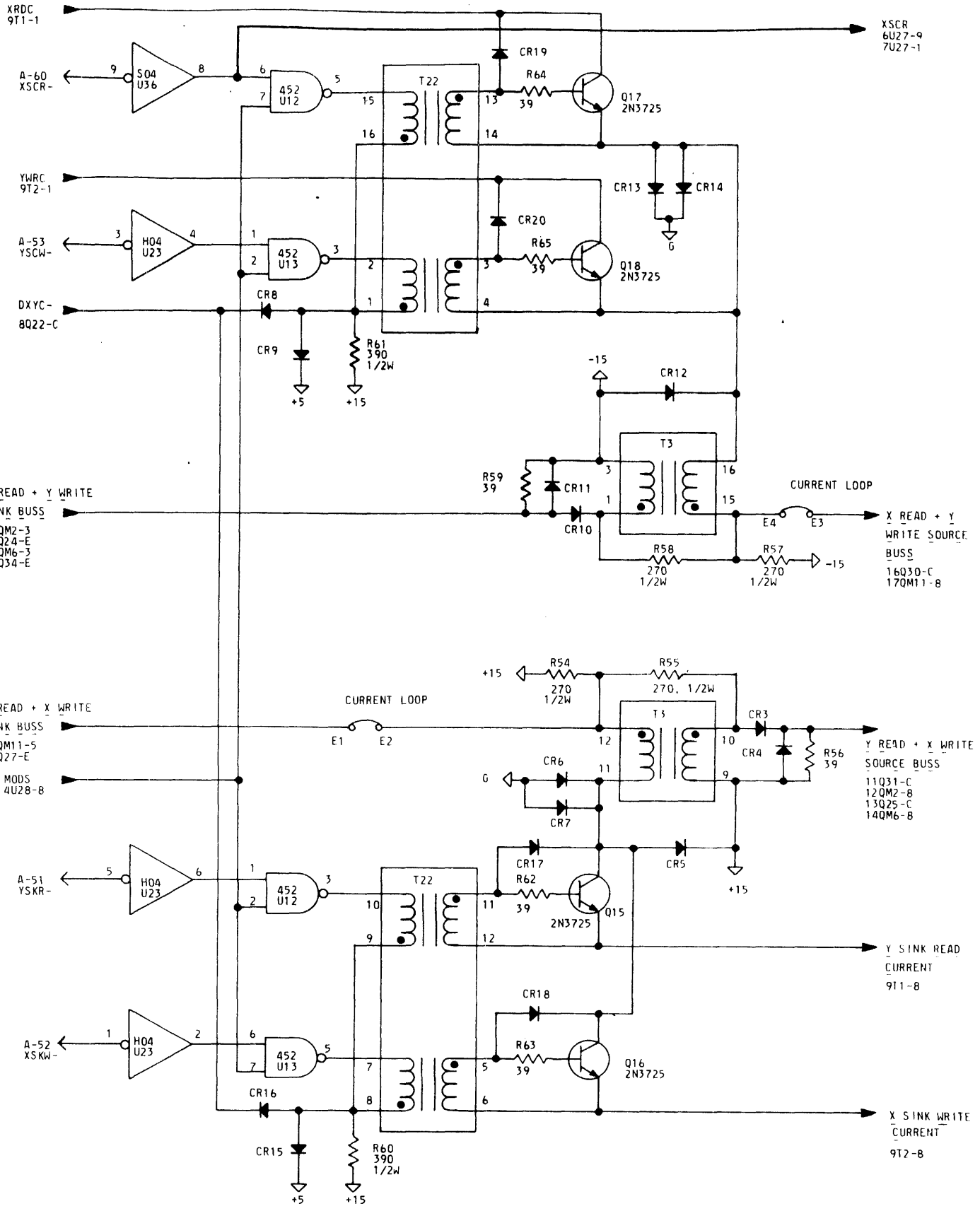

FABRI-TEK INC. MEMORY PRODUCTS DIVISION	TITLE: SCHEMATIC MEMORY ELECTRONICS ASSEMBLY			
	DWG. NO. C 138-001706	MODEL	VERS.	PAGE 10

E.C.O.	EC. 17039
HIST.	REV 01E

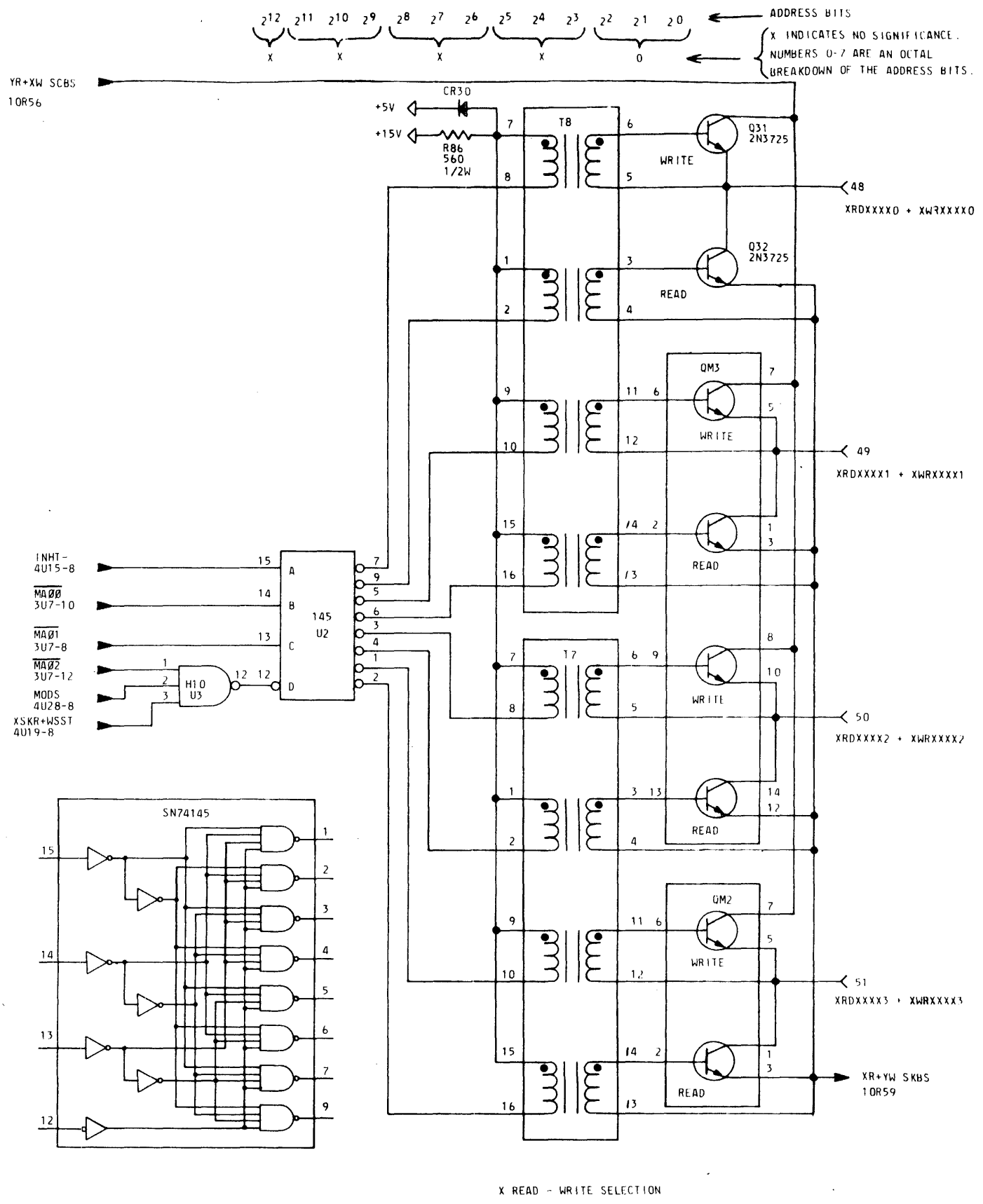

FABRI-TEK INC. MEMORY PRODUCTS DIVISION	TITLE	SCHEMATIC MEMORY ELECTRONICS ASSEMBLY			
	DWG. NO. C	138-001706	MODEL	VERS.	PAGE 11

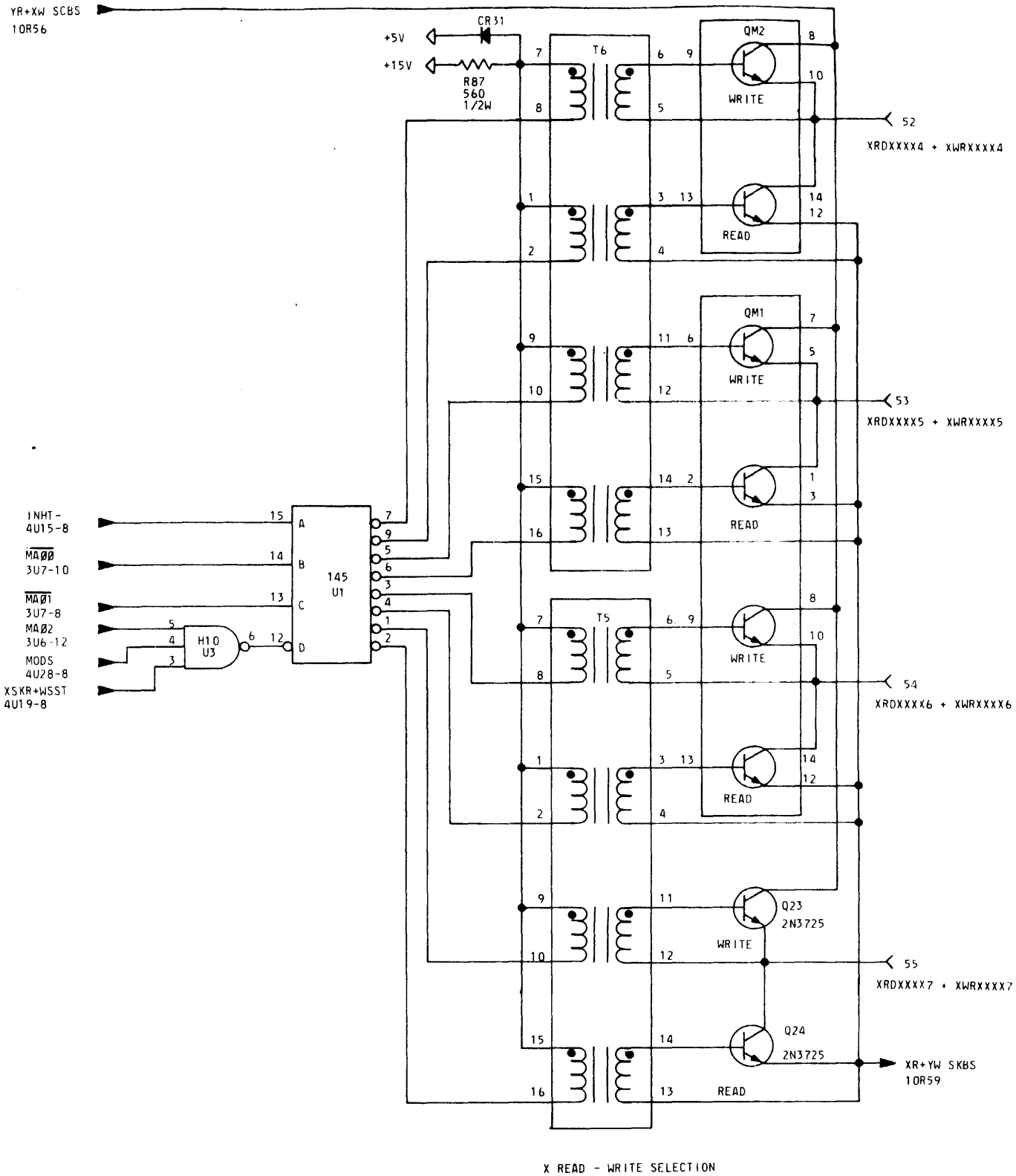

X READ - WRITE SELECTION

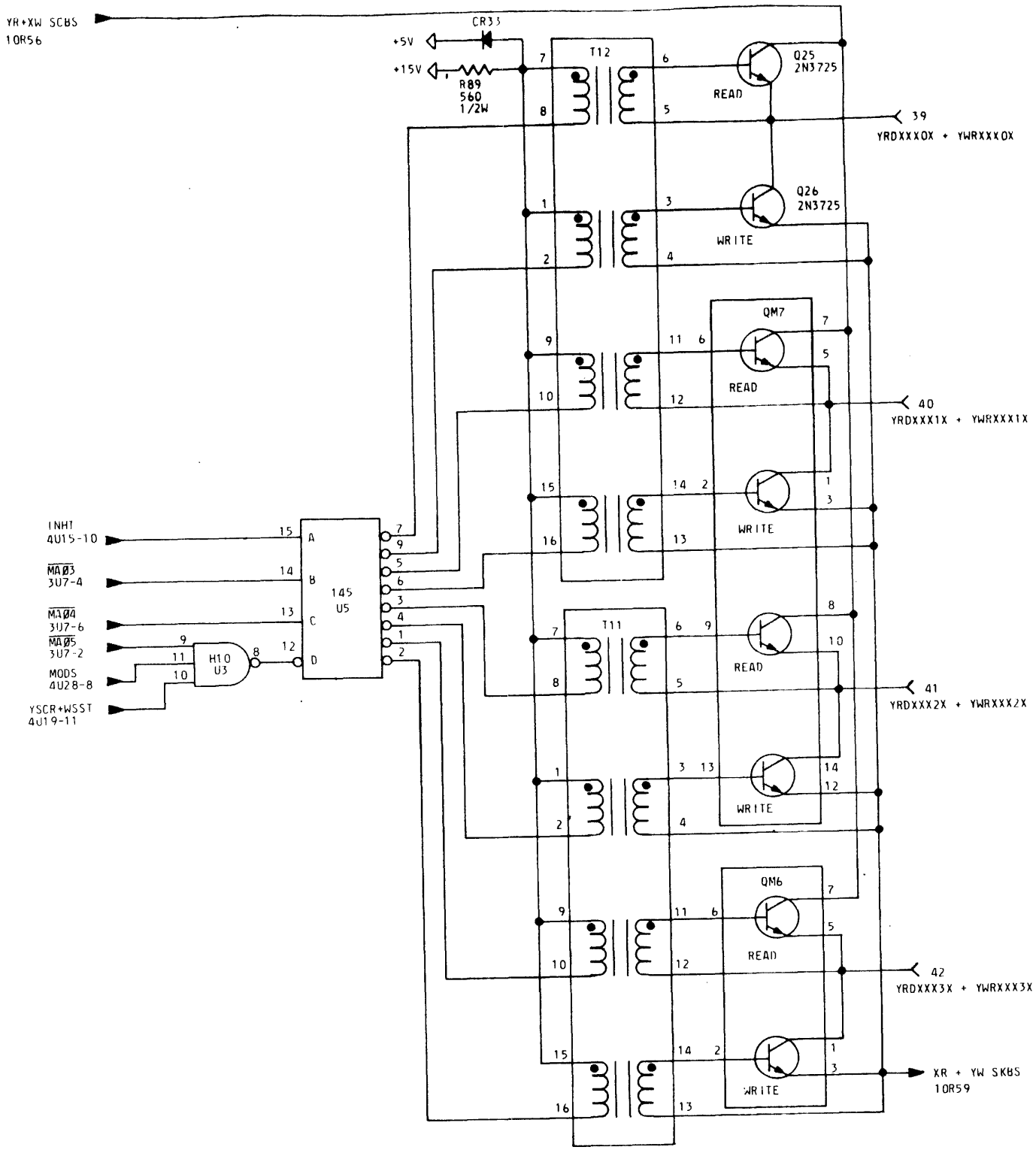

Y READ - WRITE SELECTION

FABRI-TEK INC. MEMORY PRODUCTS DIVISION	TITLE: SCHEMATIC MEMORY ELECTRONICS ASSEMBLY			
	DWG. NO. C 138-001706	MODEL	VERS.	PAGE 13

E.C.O.
HIST.

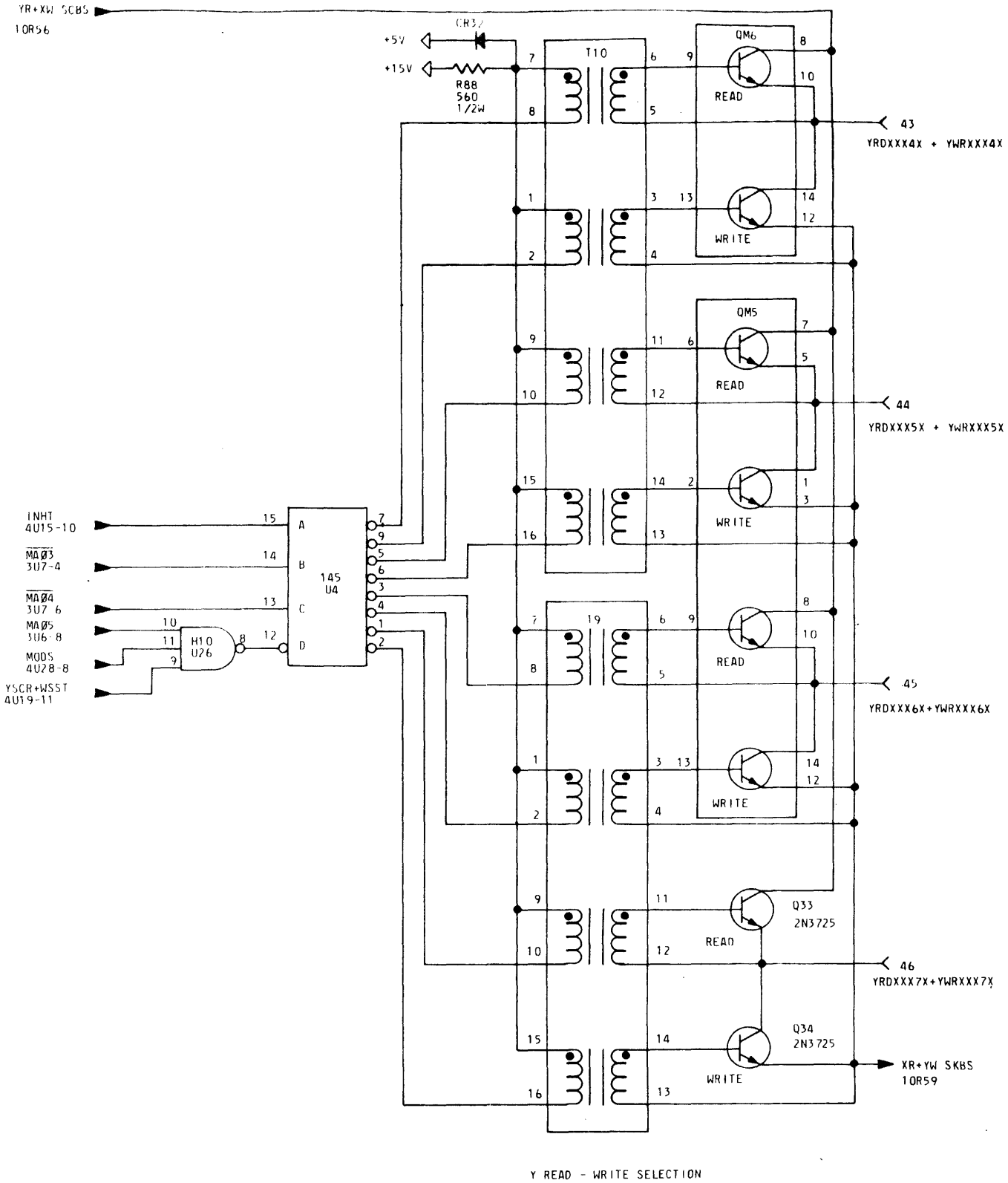

Y READ - WRITE SELECTION

FABRI-TEK INC. MEMORY PRODUCTS DIVISION	TITLE: SCHEMATIC MEMORY ELECTRONICS ASSEMBLY			
	DWG. NO. C 138-001706	MODEL	VERS.	PAGE 14

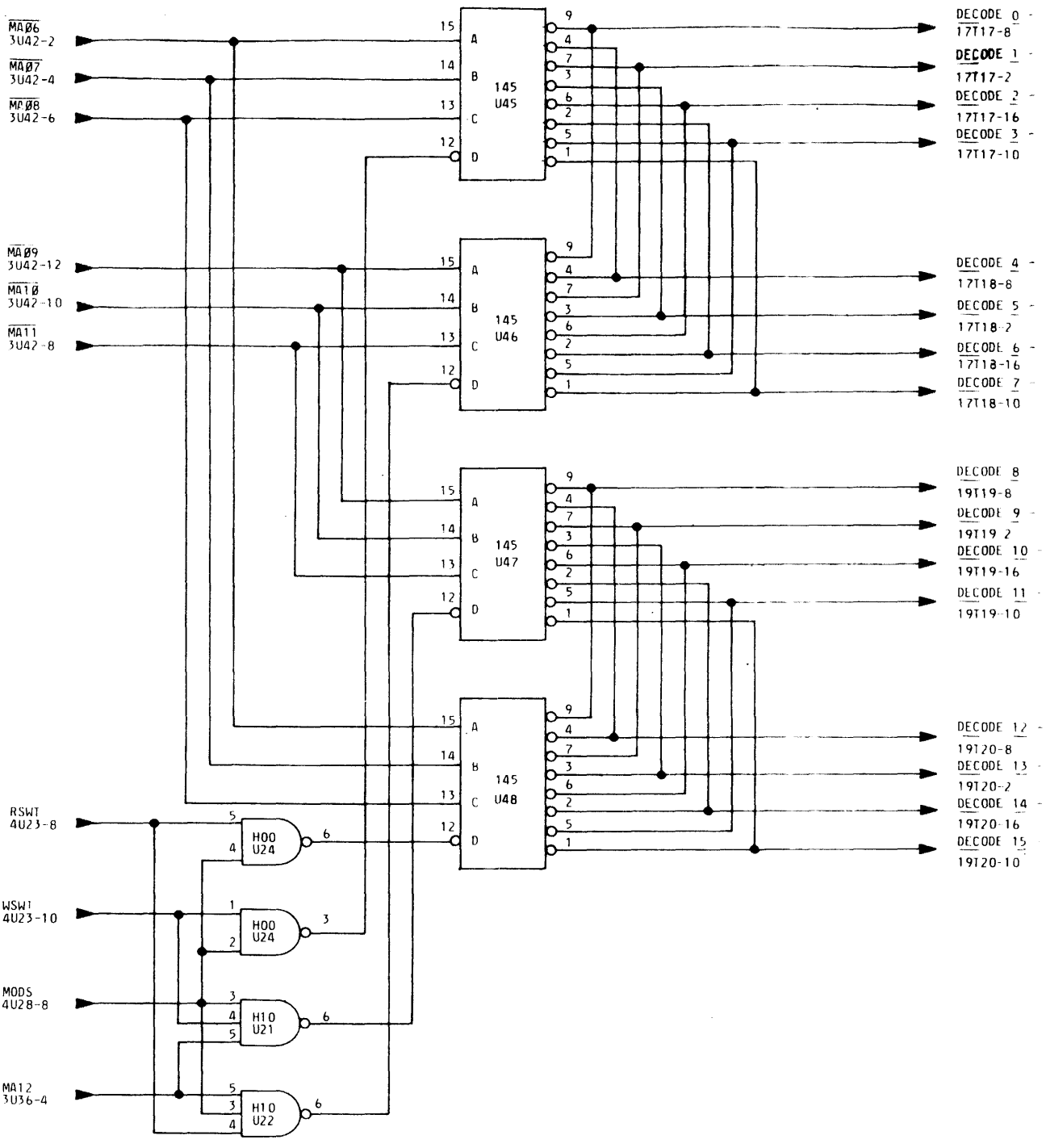
MA06
3U42-2
MA07
3U42-4
MA08
3U42-6
MA09
3U42-12
MA10
3U42-10
MA11
3U42-8
RSWI
4U23-8
WSWI
4U23-10
MODS
4U28-8
MA12
3U36-4
145
U45
145
U46
145
U47
145
U48
H00
U24
H00
U24
H10
U21
H10
U22
DECODE 0 -
17T17-8
DECODE 1 -
17T17-2
DECODE 2 -
17T17-16
DECODE 3 -
17T17-10
DECODE 4 -
17T18-8
DECODE 5 -
17T18-2
DECODE 6 -
17T18-16
DECODE 7 -
17T18-10
DECODE 8
19T19-8
DECODE 9 -
19T19-2
DECODE 10 -
19T19-16
DECODE 11 -
19T19-10
DECODE 12 -
19T20-8
DECODE 13 -
19T20-2
DECODE 14 -
19T20-16
DECODE 15
19T20-10

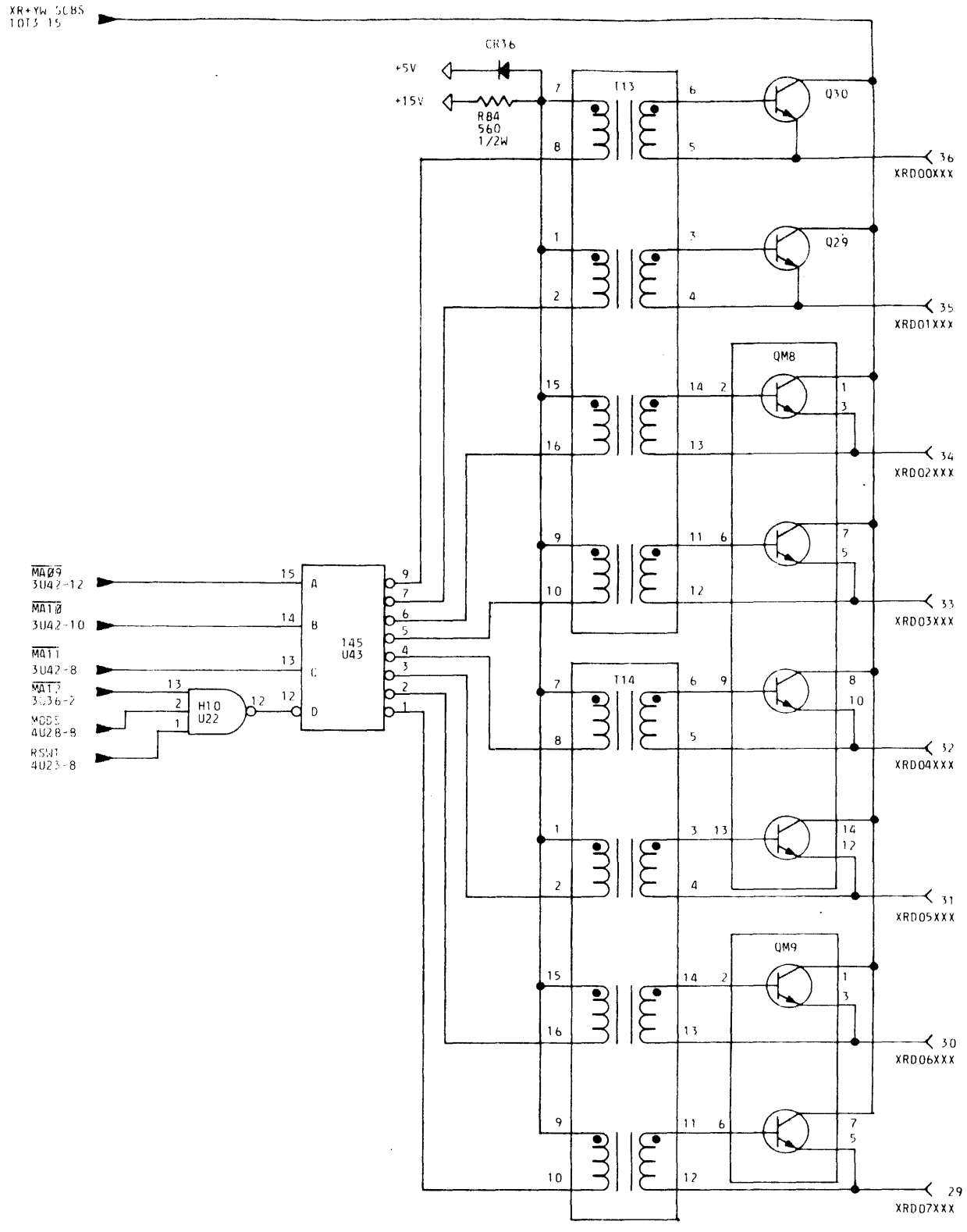

X READ SELECTION

E.C.O. HIST.

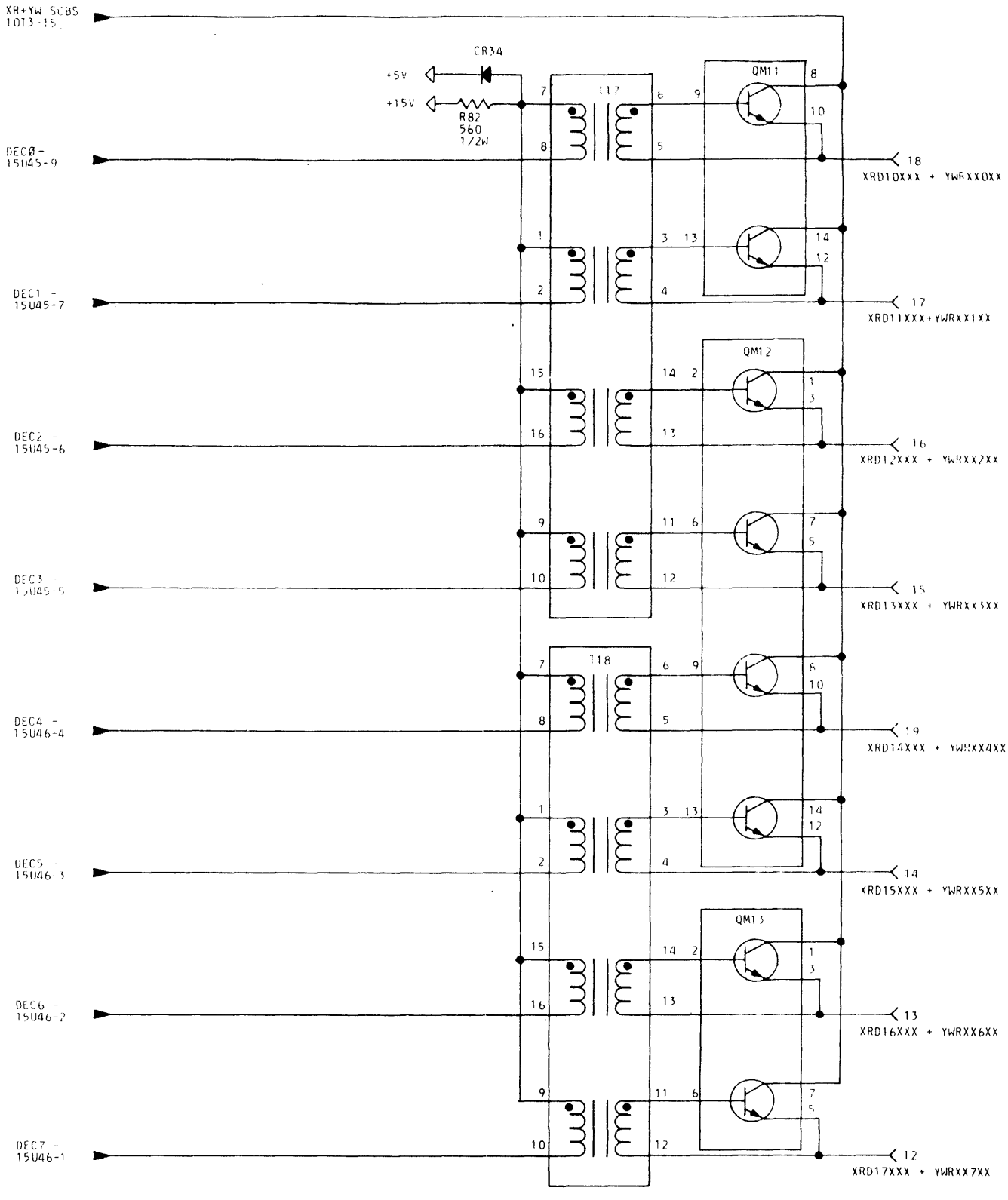

X READ - Y WRITE SELECTION

FABRI-TEK INC. MEMORY PRODUCTS DIVISION	TITLE: SCHEMATIC MEMORY ELECTRONICS ASSEMBLY			
	DWG. NO. C 138-001706	MODEL	VERS.	PAGE 17

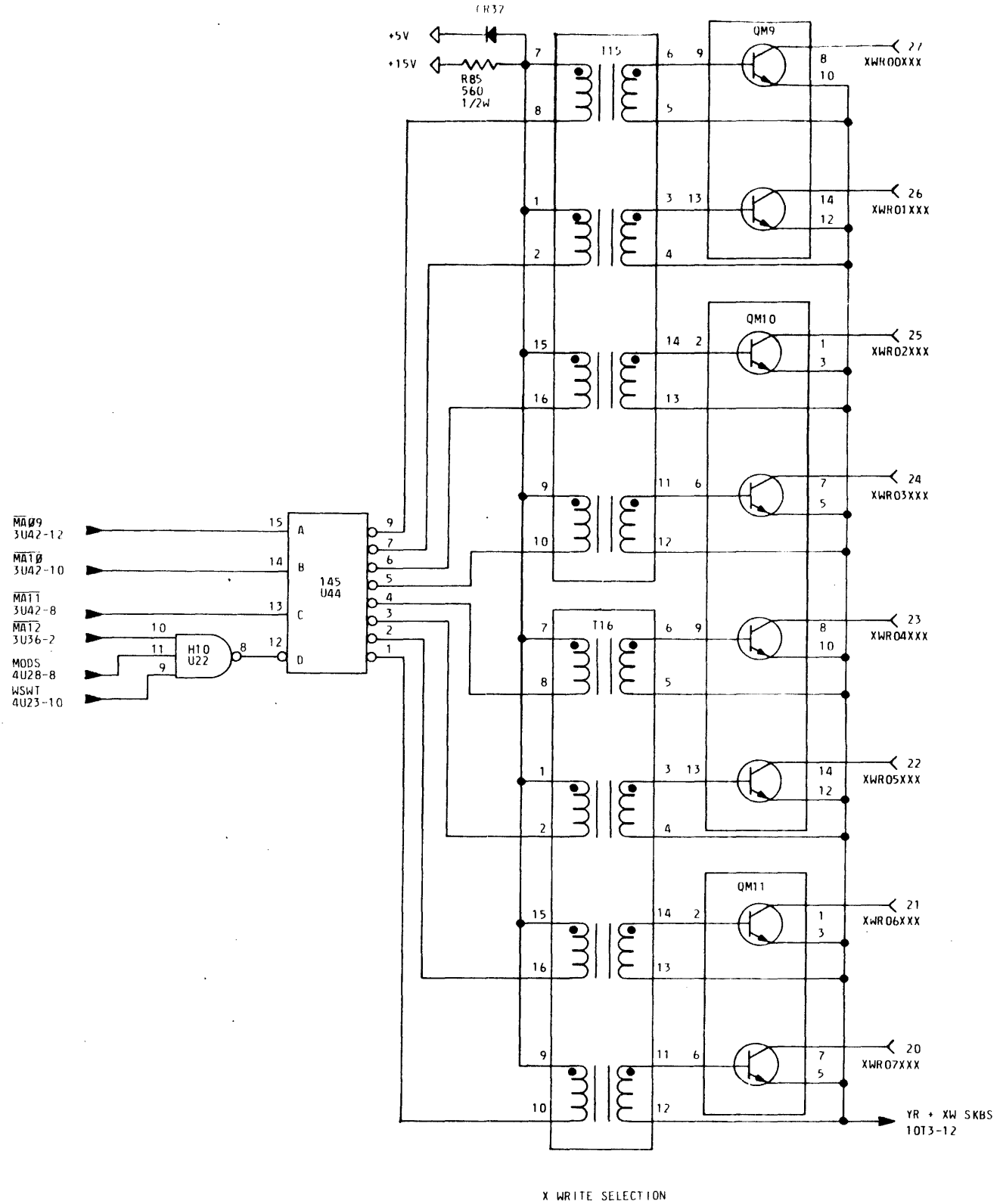

X WRITE SELECTION

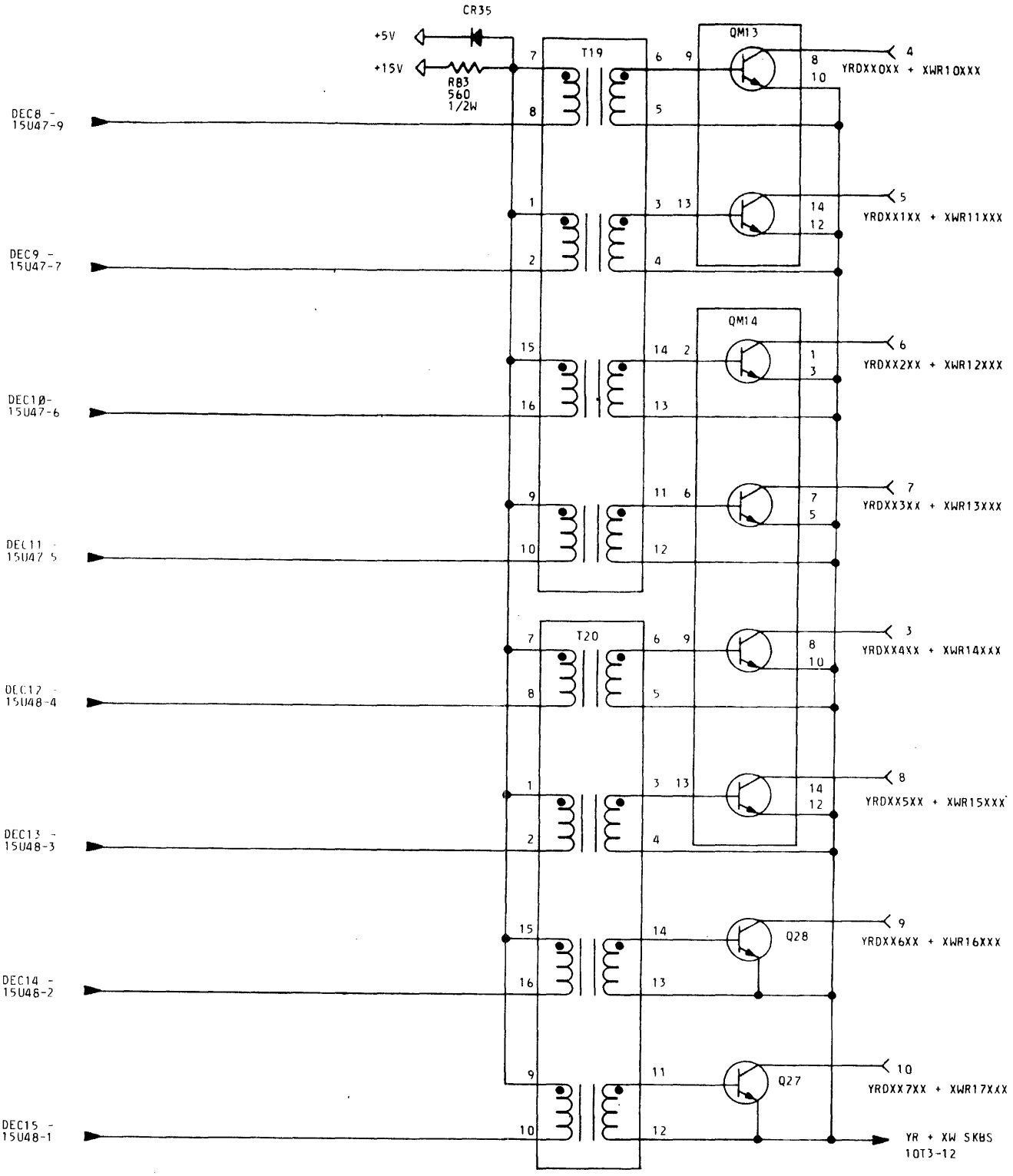

Y READ - X WRITE SELECTION

FABRI-TEK INC. MEMORY PRODUCTS DIVISION	TITLE: SCHEMATIC MEMORY ELECTRONICS ASSEMBLY			
	DWG. NO. C 138-001706	MODEL	VERS.	PAGE 19

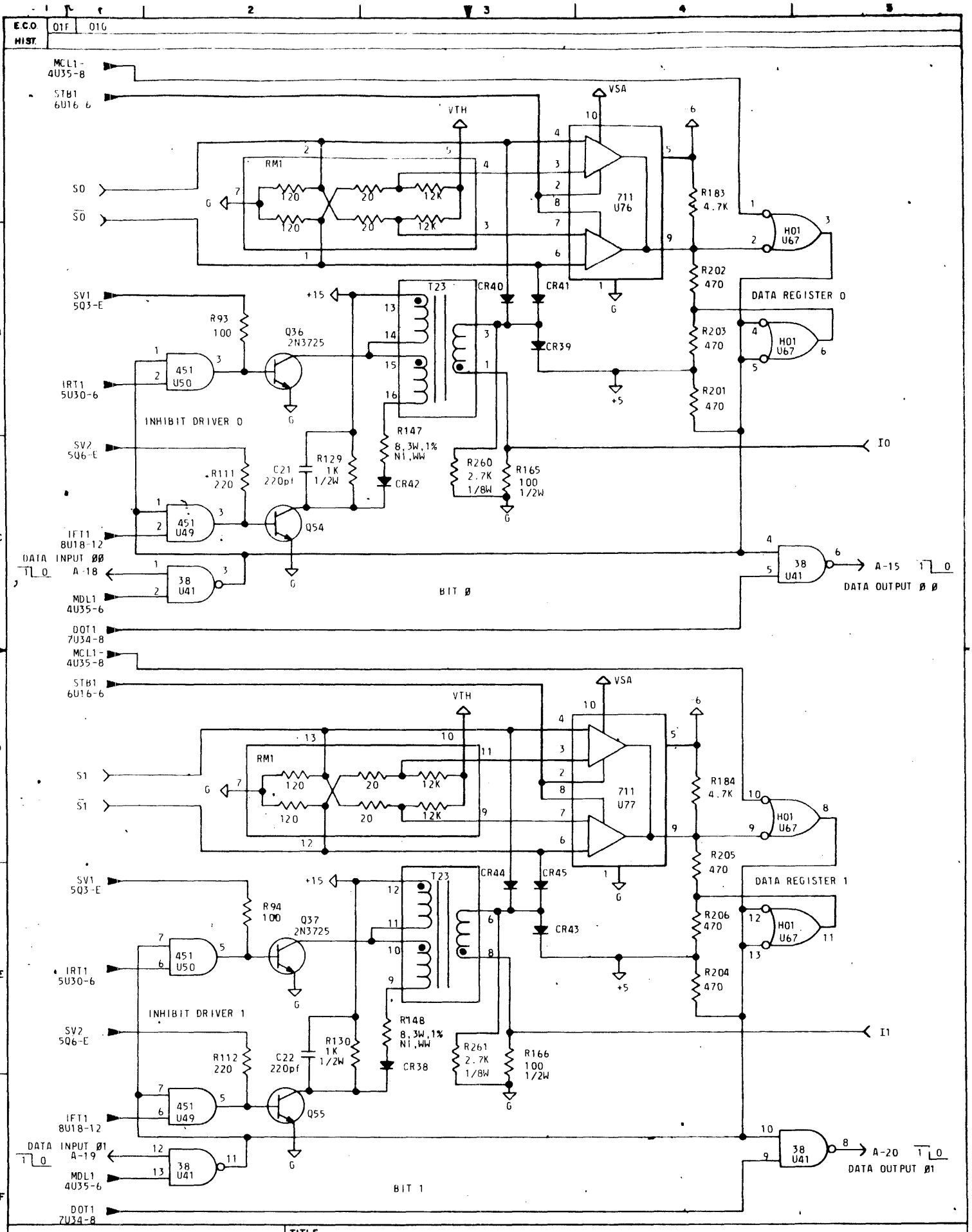

FABRI-TEK INC. MEMORY PRODUCTS DIVISION	TITLE: SCHEMATIC MEMORY ELECTRONICS ASSEMBLY				
	DWG. NO. C: 138-001706	MODEL:	VERS.:	PAGE: 20	

E.C.O. HIST.	01F	01G

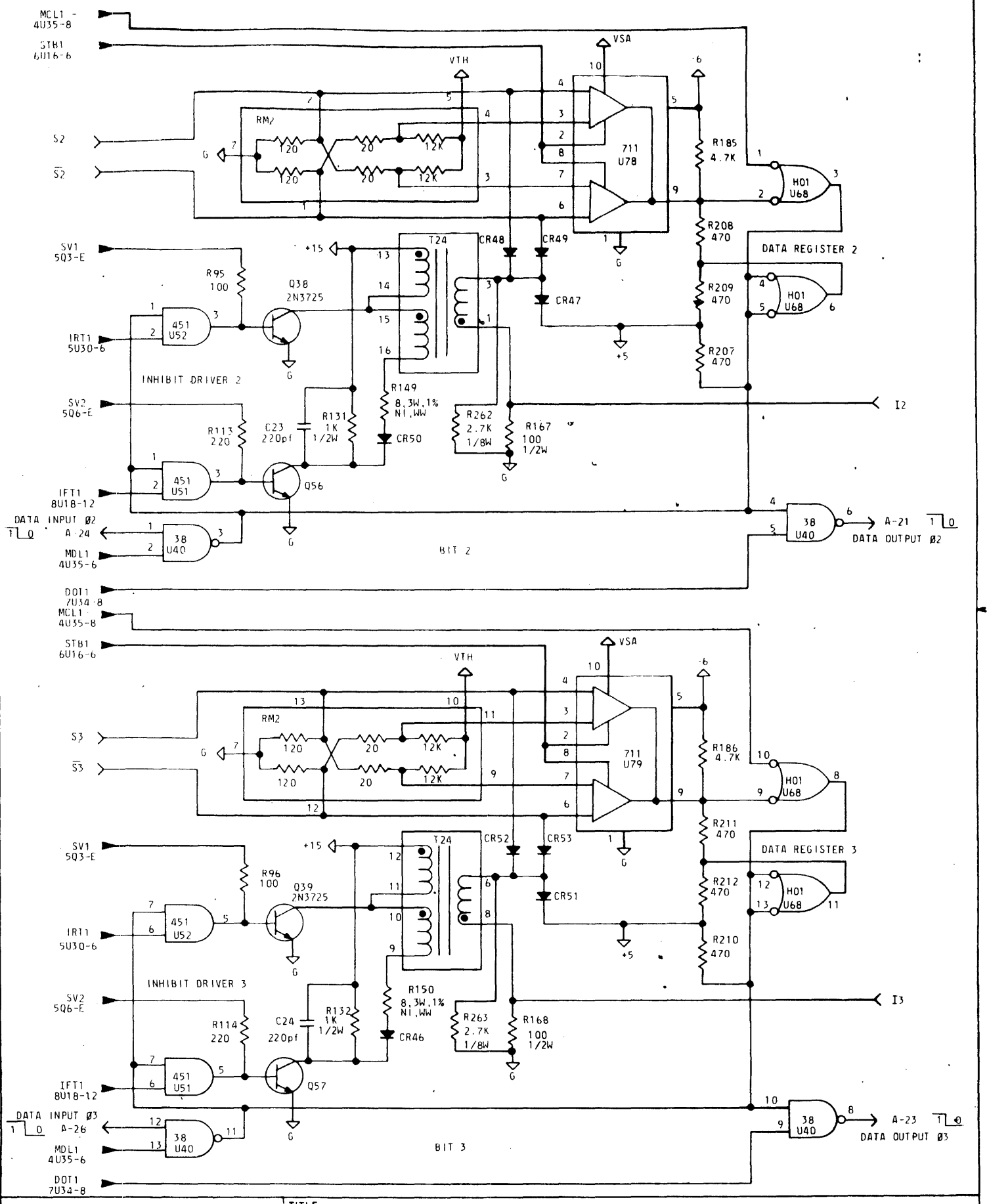

FABRI-TEK INC. MEMORY PRODUCTS DIVISION	TITLE	SCHEMATIC MEMORY ELECTRONICS ASSEMBLY			
	DWG. NO. C	138-001706	MODEL	VERS.	PAGE 21

E.C.O. HIST.	01E	01G

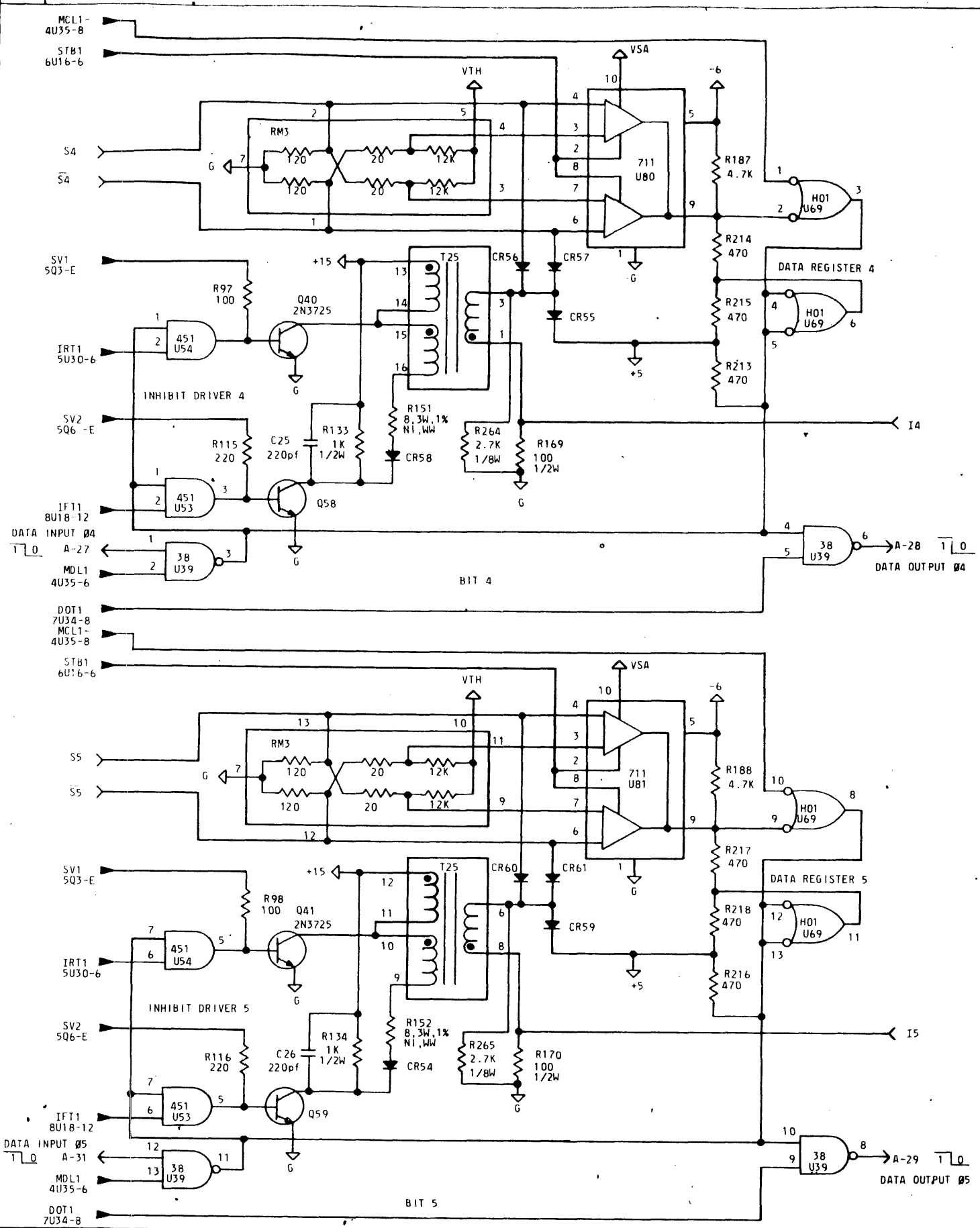

FABRI-TEK INC. MEMORY PRODUCTS DIVISION	TITLE: SCHEMATIC MEMORY ELECTRONICS ASSEMBLY			
	DWG. NO. C: 138-001706	MODEL	VERS.	PAGE: 22

E.C.O.	01F	01G
HIST.		

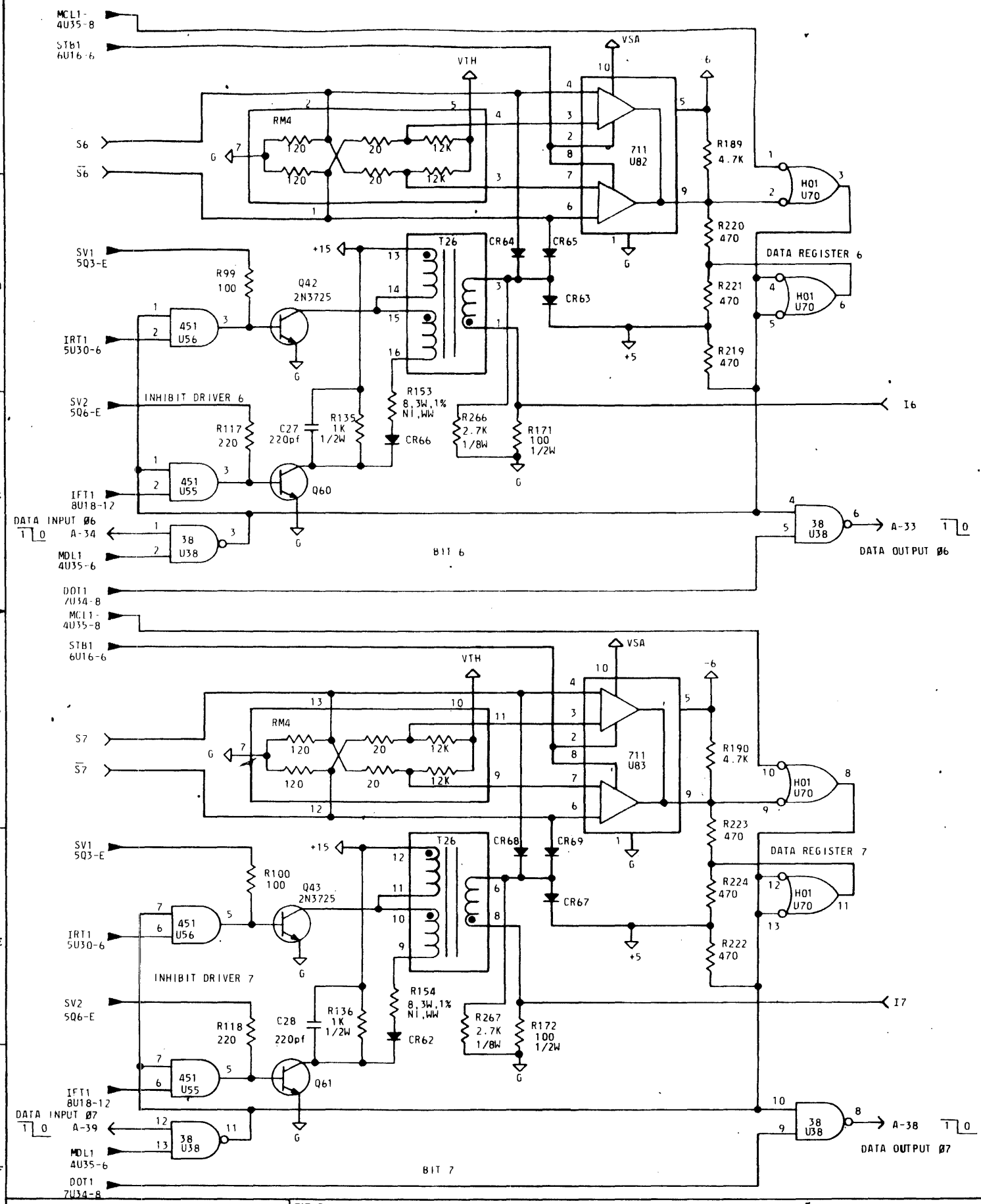

FABRI-TEK INC. MEMORY PRODUCTS DIVISION	TITLE: SCHEMATIC MEMORY ELECTRONICS ASSEMBLY			
	DWG. NO. C 138-001706	MODEL	VERS.	PAGE 23

E.C.O.	EC 17039	01F	01G
HIST.	REV 01E		

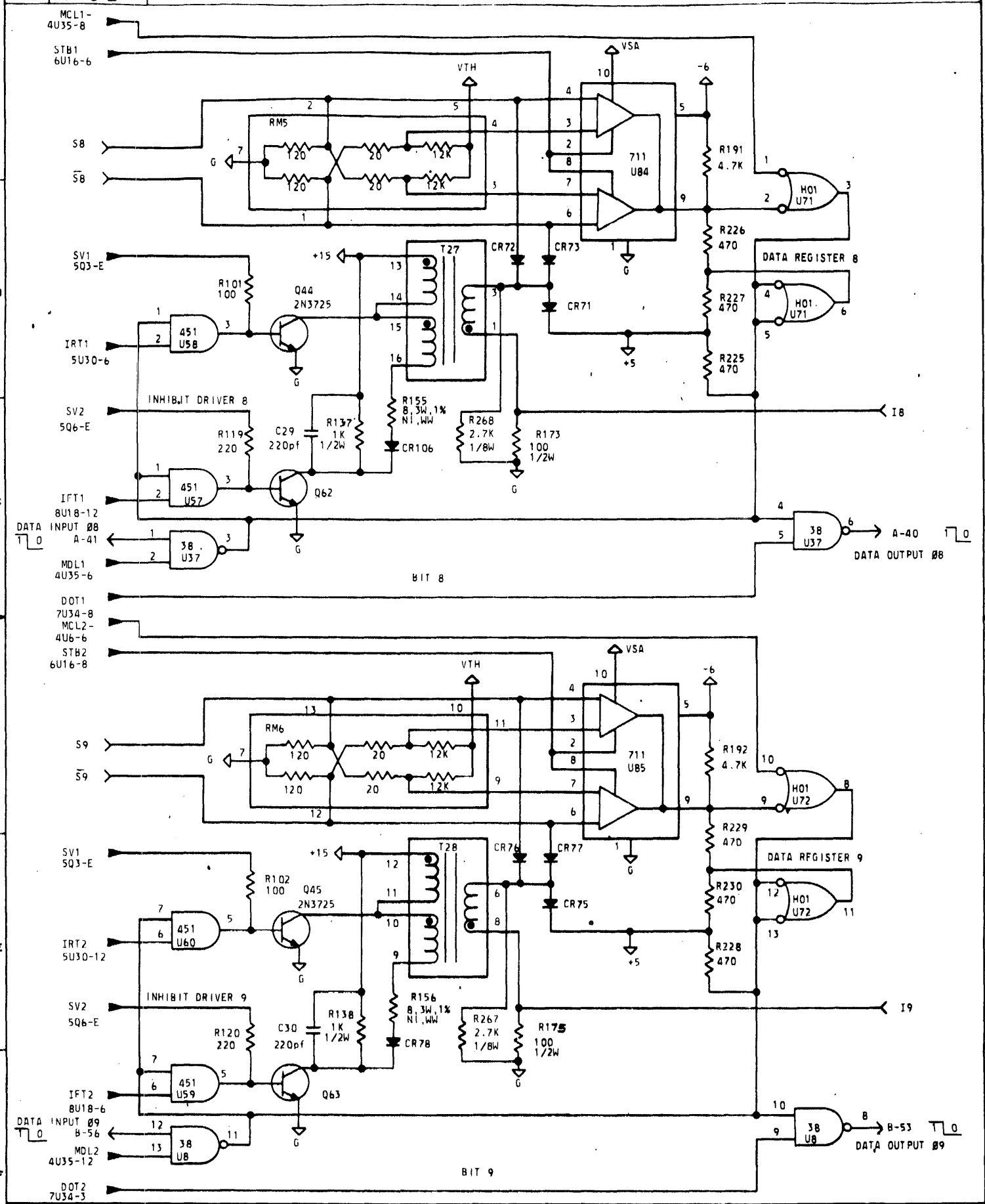

FABRI-TEK INC. MEMORY PRODUCTS DIVISION	TITLE: SCHEMATIC MEMORY ELECTRONICS ASSEMBLY			
	DWG. NO. C 138-001706	MODEL	VERS.	PAGE 24

E.C.O.	EC17039	01F	01G
HIST.	REV. 01E		

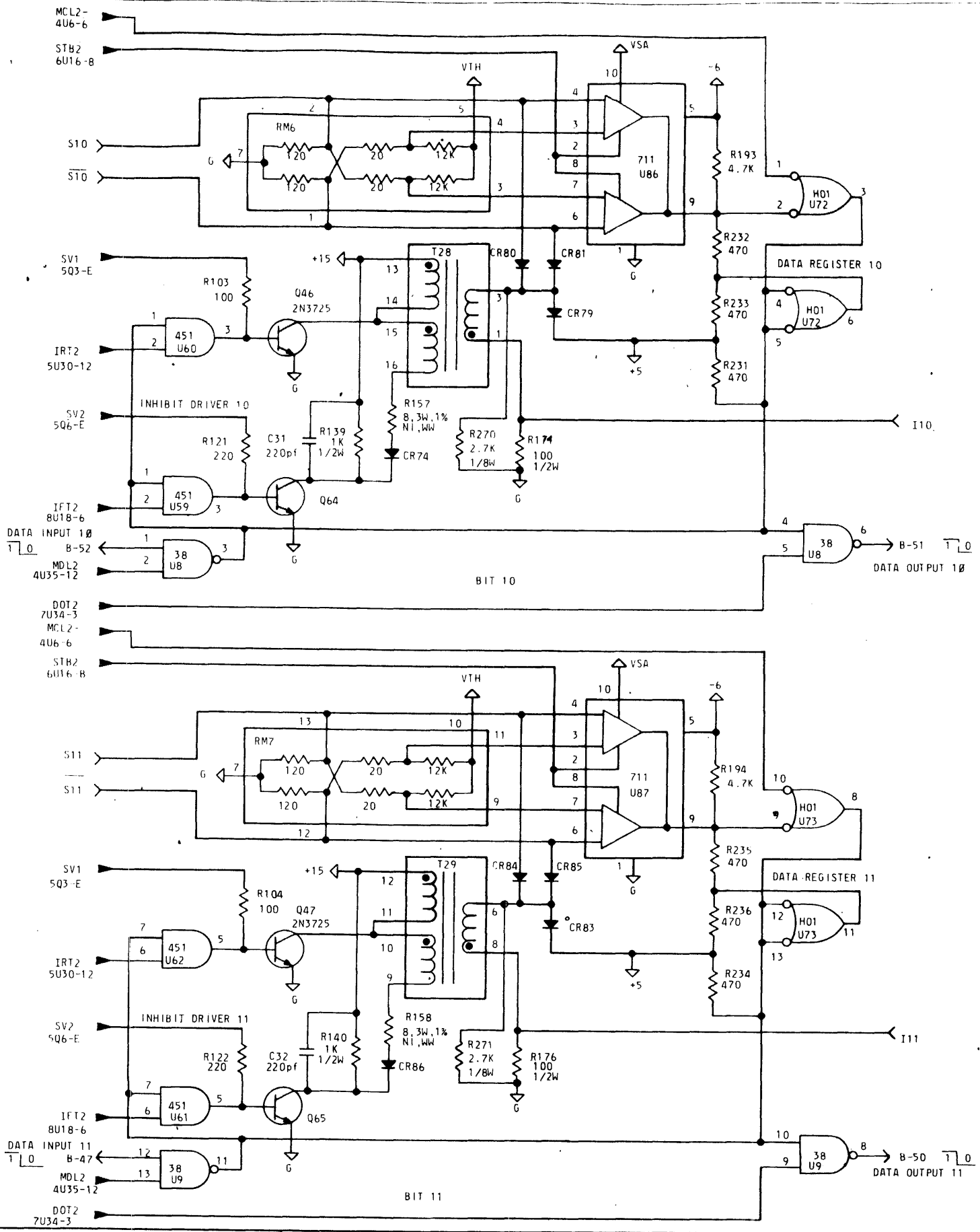

FABRI-TEK INC. MEMORY PRODUCTS DIVISION	TITLE	SCHEMATIC MEMORY ELECTRONICS ASSEMBLY			
	DWG. NO. C	138-001706	MODEL	VERS.	PAGE 25

E.C.O	01F	016
HIST.		

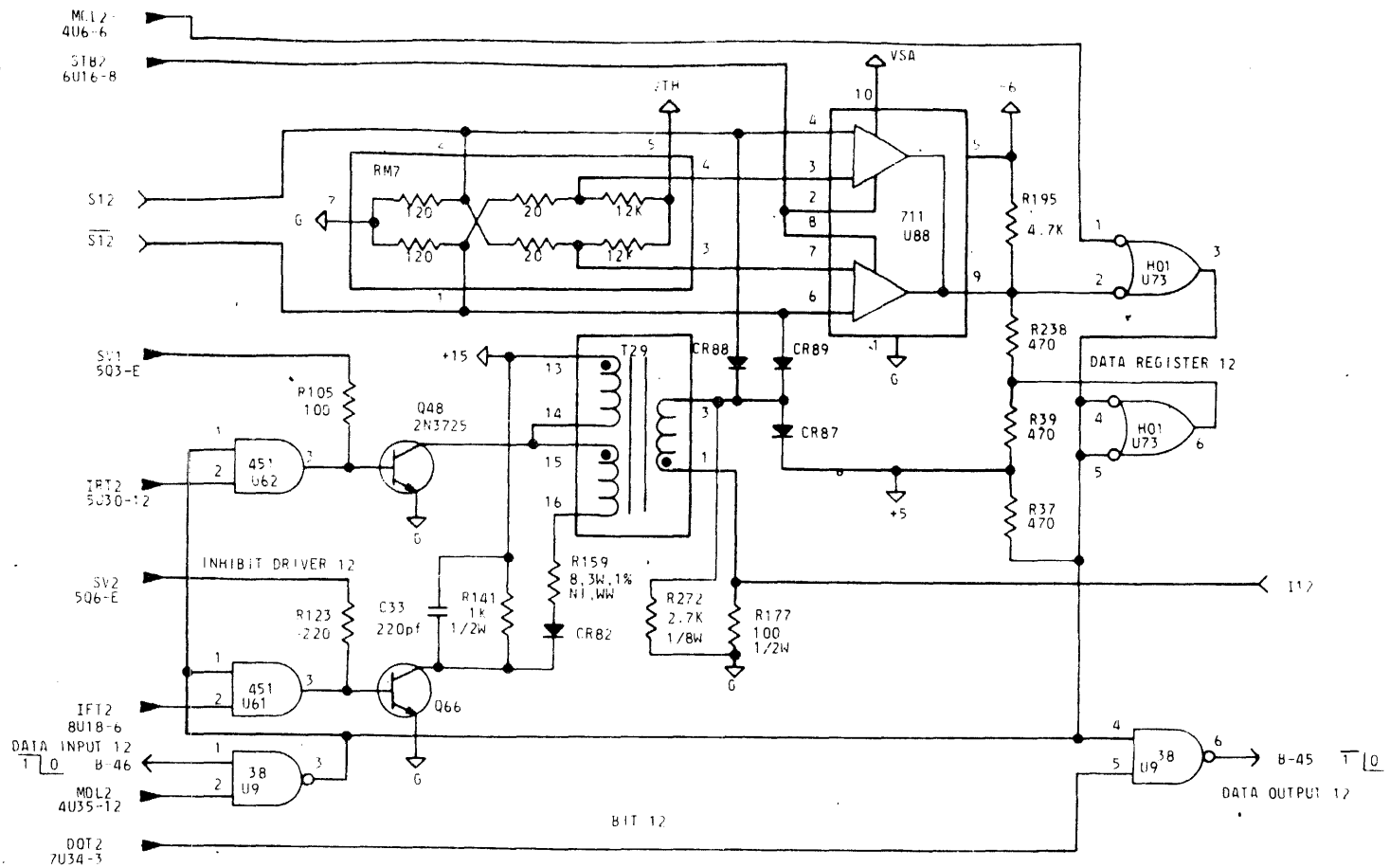

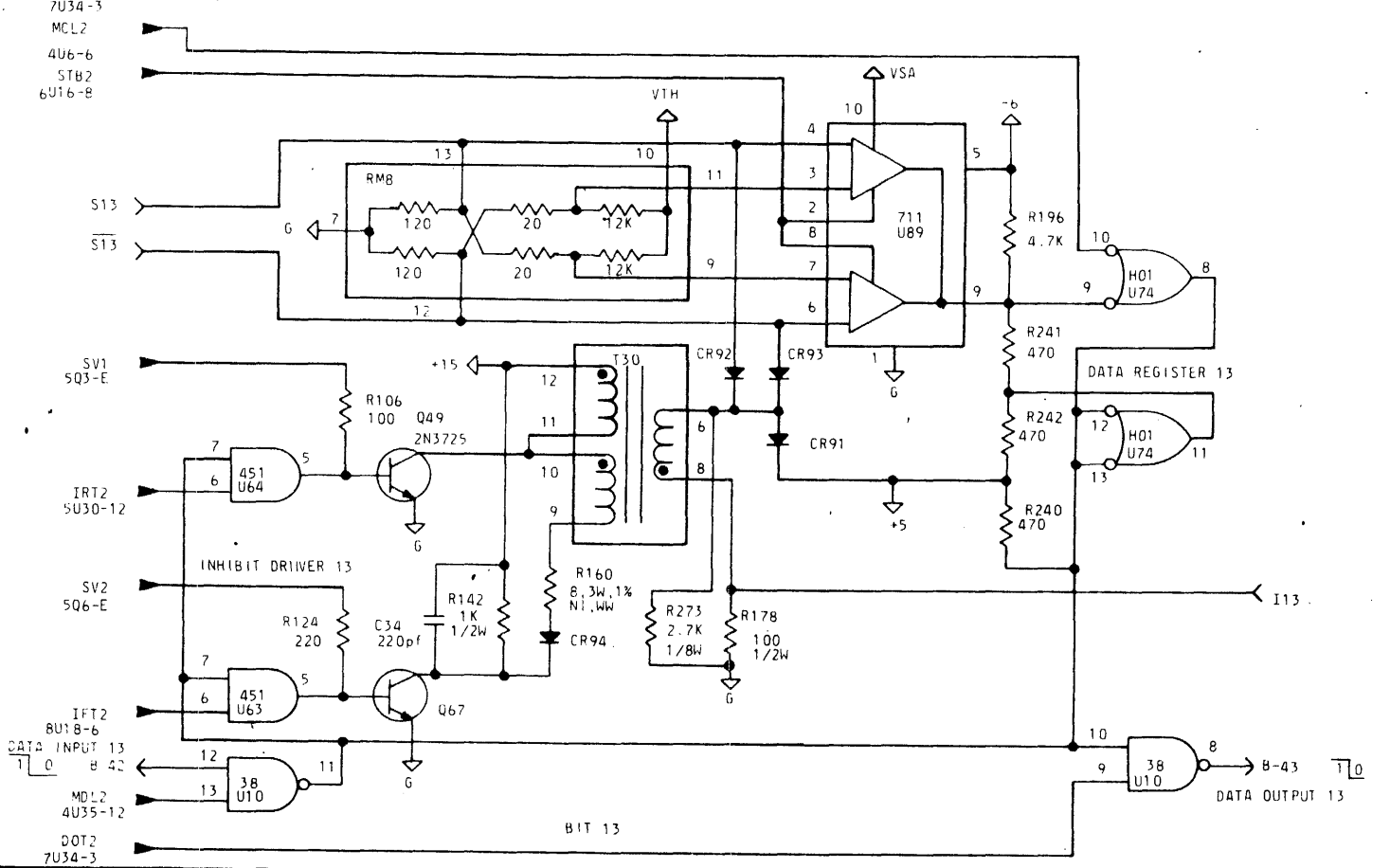

FABRI-TEK INC. MEMORY PRODUCTS DIVISION	TITLE	SCHEMATIC MEMORY ELECTRONICS ASSEMBLY			
	DWG. NO. C	138-001706	MODEL	VERS.	PAGE 26

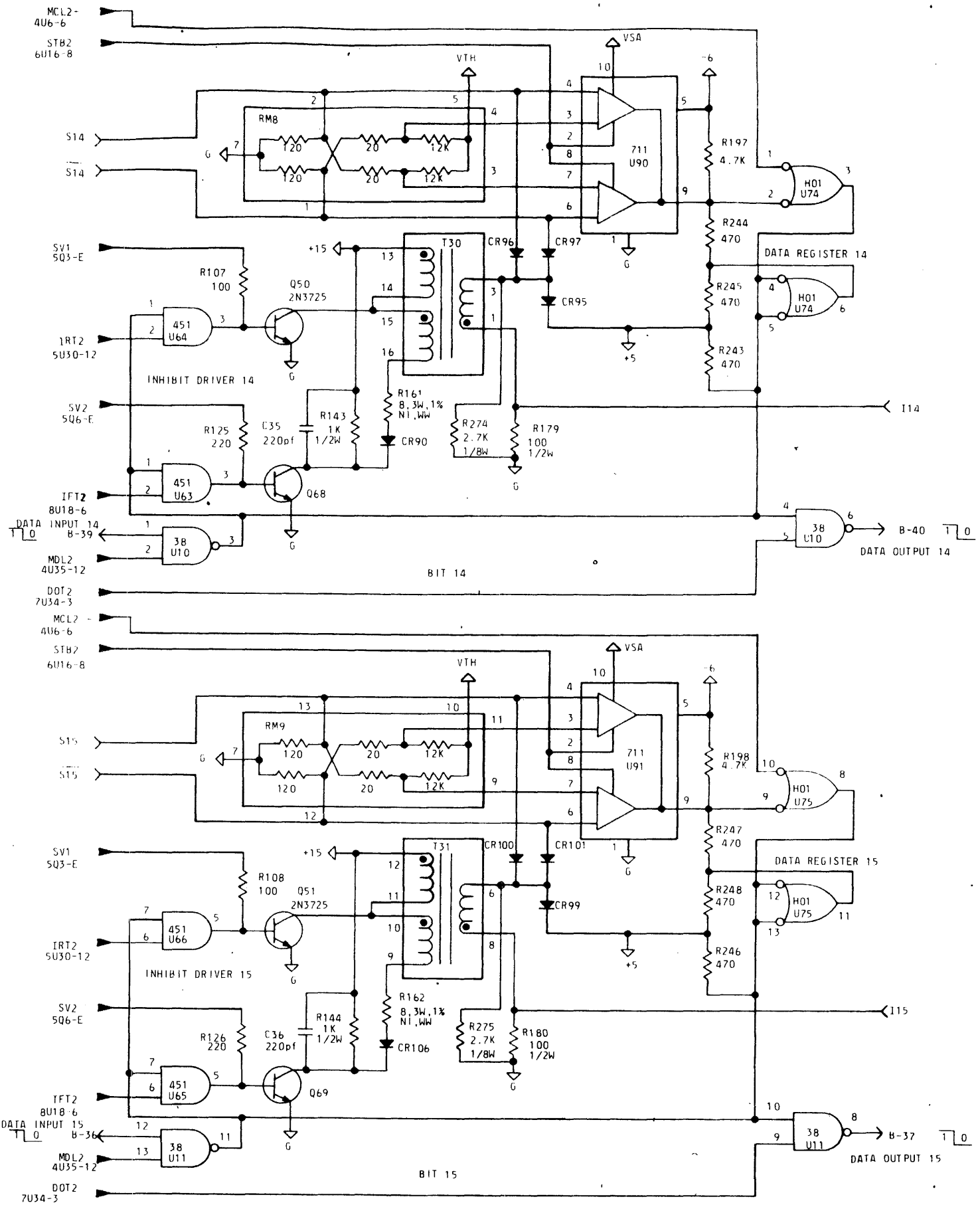

FABRI-TEK INC. MEMORY PRODUCTS DIVISION	TITLE: SCHEMATIC MEMORY ELECTRONICS ASSEMBLY			
	DWG. NO. C 138-001706	MODEL	VERS.	PAGE 27

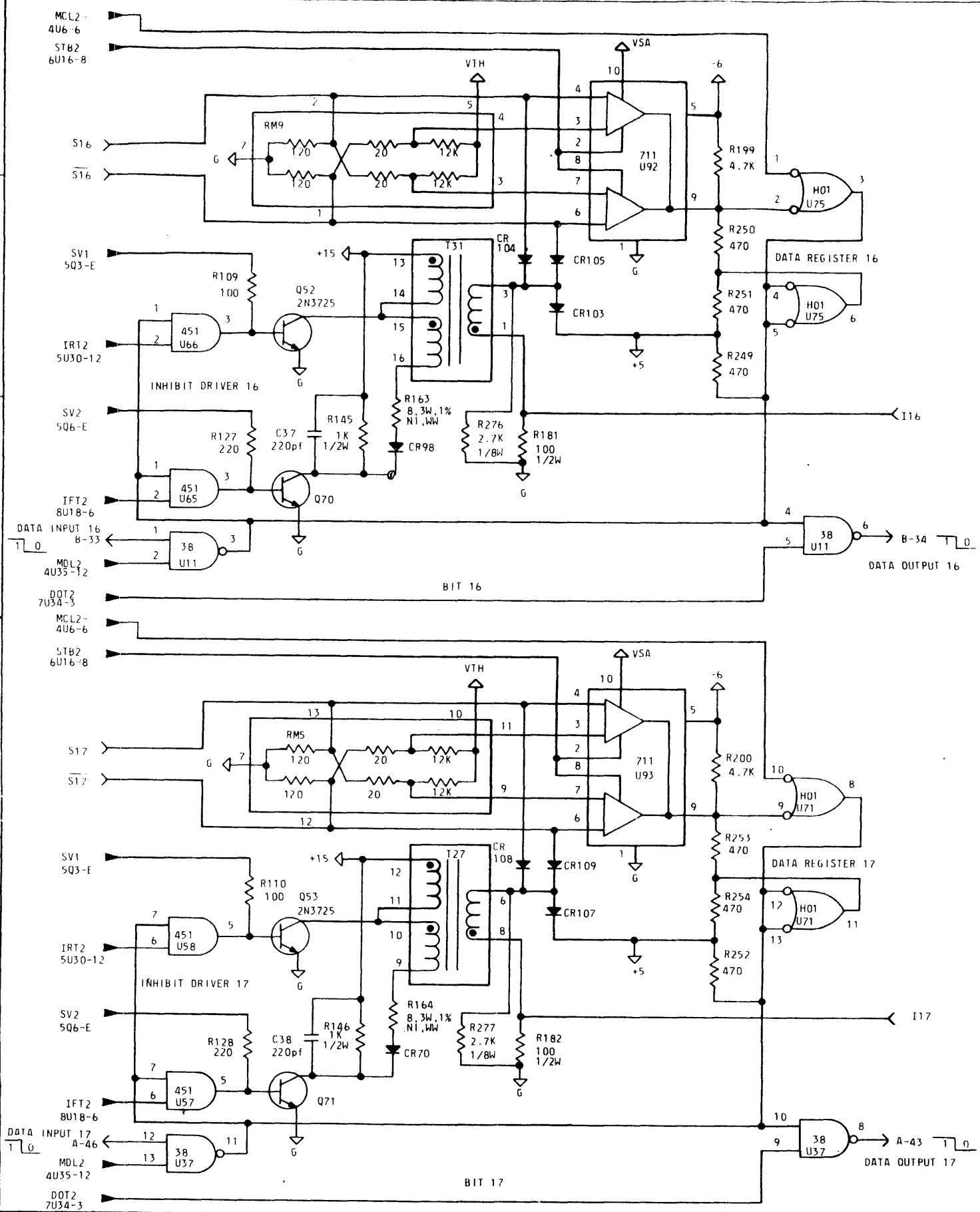

FABRI-TEK INC. MEMORY PRODUCTS DIVISION	TITLE: SCHEMATIC MEMORY ELECTRONICS ASSEMBLY				
	DWG. NO. C 138-001706	MODEL	VERS.	PAGE 28	

E.C.O.	#15462 REV A	#15473 REV B	ECO 15637 REV C	E.C. #15845 REV D	EC#15971 REV E	00F-EC17564	00G-EC 18479
HIST.	00H-EC 19532F						

1. UNLESS OTHERWISE SPECIFIED:
   A. ALL RESISTORS 1/4 W, 5% AND IN OHMS.
   B. ALL CAPACITORS IN MICROFARADS.
   C. ALL TRANSISTORS 2N4014.
   D. ALL DIODES 1N4607.
2. LAST REFERENCE DESIGNATION USED C24,CR11,Q38, R138,U93,T3,RT1.

3. THE FOLLOWING INTEGRATED CIRCUIT DESIGNATIONS WERE NOT USED. U49, U50,U59,U60 U69, U70, U76, U80, U81, U85, U88, U90, U91.
4. ← THIS SYMBOL REPRESENTS THE CARD EDGE CONNECTOR. IT INDICATES A MALE CONNECTOR. IT DOES NOT NECESSARILY INDICATE SIGNAL DIRECTION.
5. ► THIS SYMBOL WILL BE FOUND ON THE LEFT BORDER. IT INDICATES DIRECTION OF SIGNAL FLOW. TO THE LEFT OF THE ARROWHEAD WILL BE THE SIGNAL MNEMONIC. EXAMPLE: LHIF, AND THE POINT OF ORIGIN CODE. EXAMPLE: 3U35-6

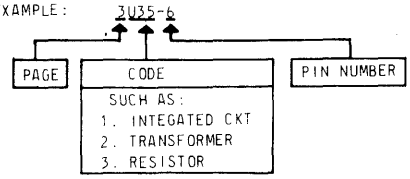

6. → THIS SYMBOL WILL BE FOUND ON THE RIGHT BORDER. IT INDICATES DIRECTION OF SIGNAL FLOW. TO THE RIGHT OF THE ARROWHEAD WILL BE THE FULL ENGLISH NAME AND THE LETTERS UNDERLINED THAT WILL MAKE UP THE MNEMONIC. EXAMPLE: LATCH INTERFACE. A LIST OF ALL DESTINATIONS WILL BE PRESENT.

INTEGRATED CIRCUIT CODE BREAKDOWN.

CODE	MANUFACTURER'S PART NUMBER	FTI PART NUMBER
38	SN7438N	134-0195-00
H00	SN74H00N	134-0165-00
H04	SN74H04N	134-0173-00
H05	SN74H05N	134-0191-00
H10	SN74H10N	134-0167-00
H11	SN74H11N	134-0168-00
H20	SN74H20N	134-0169-00
H21	SN74H21N	134-0170-00
H40	SN74H40N	134-0171-00
H51	SN74H51N	134-0220-00
H74	SN74H74N	134-0188-00
S00	SN74S00N	134-0207-00
S04	SN74S04N	134-0209-00
S11	SN74S11N	134-0213-00
S20	SN74S20N	134-0206-00
S40	SN74S40N	134-0205-00
452	SN75452N	134-0212-00
304	LM304	134-0255-00

TRANSFORMER BREAKDOWN BY REFERENCE DESIGNATION

REFERENCE DESIGNATION	FTI PART NUMBER
T1	151-0007-00
T2 ,T3	019-0223-00

REVISION STATUS OF SHEETS

	00H		00H																																			
	00G										00G	00G																											
	F	C	B	C	C	A	A	C	C		B	A	D	F	C																								
	E	C	B	C	C	A	A	C	C		B	A	D	E	C																								
	D	C	B	C	C	A	A	C	C		B	A	D	B	C																								
	C	C	B	C	C	A	A	C	C		B	A		B	C																								
	B	B	B	B	B	A	A				B	A		B	B																								
	A					A	A				A	A				END																							
	1	2	3	4	5	6	7	8	9	10	11	12	13	14	15	16	17	18	19	20	21	22	23	24	25	26	27	28	29	30	31	32	33	34	35	36		

APPROVED	DATE
R. Eidge	2/10/72

FABRI-TEK INC.
MEMORY PRODUCTS DIVISION

TITLE	SCHEMATIC TIMING AND CONTROL ASSEMBLY			
DWG. NO. C	138-001707	MODEL	VERS.	PAGE 1 OF 15

E.C.O. HIST.	#15473 REV B	ECO 15637 REV C

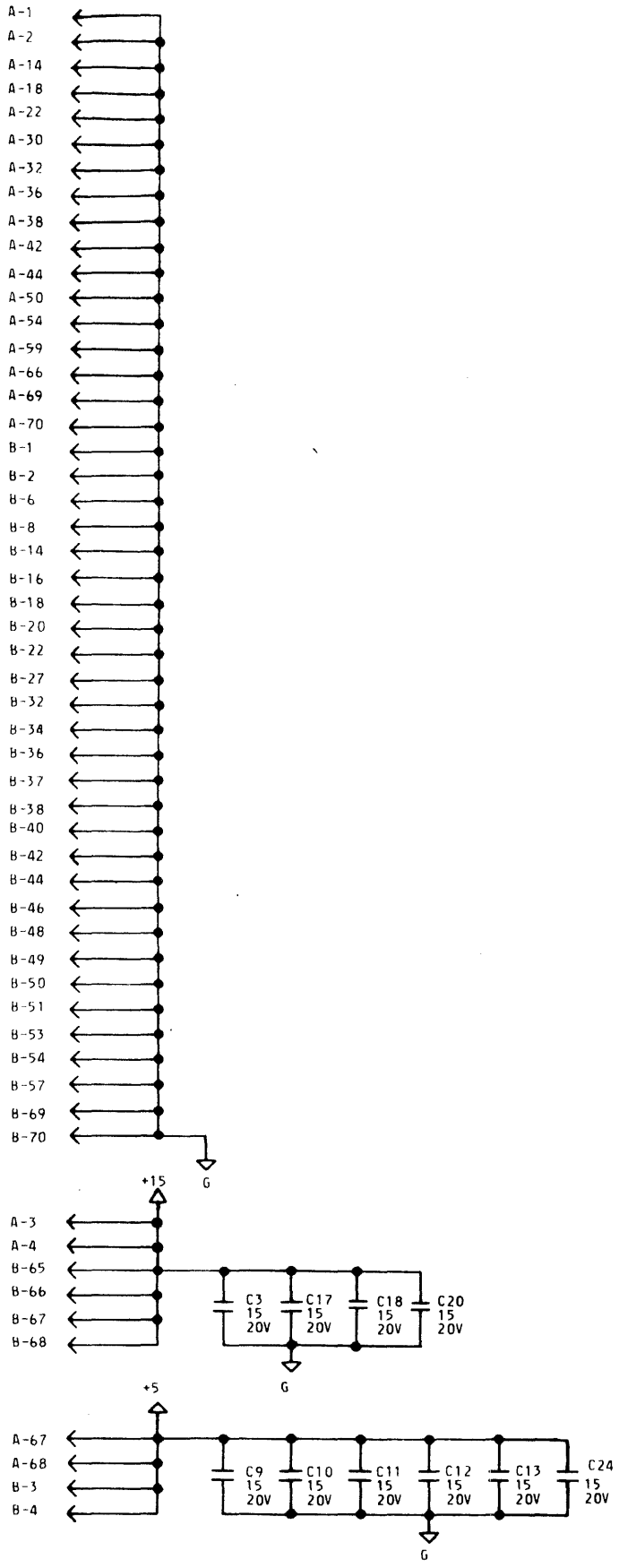

FABRI-TEK INC. MEMORY PRODUCTS DIVISION	TITLE: SCHEMATIC TIMING AND CONTROL ASSEMBLY			
	DWG. NO. C 138-001707	MODEL	VERS.	PAGE 2

E.C.O. # ... REV. B 004
HIST.

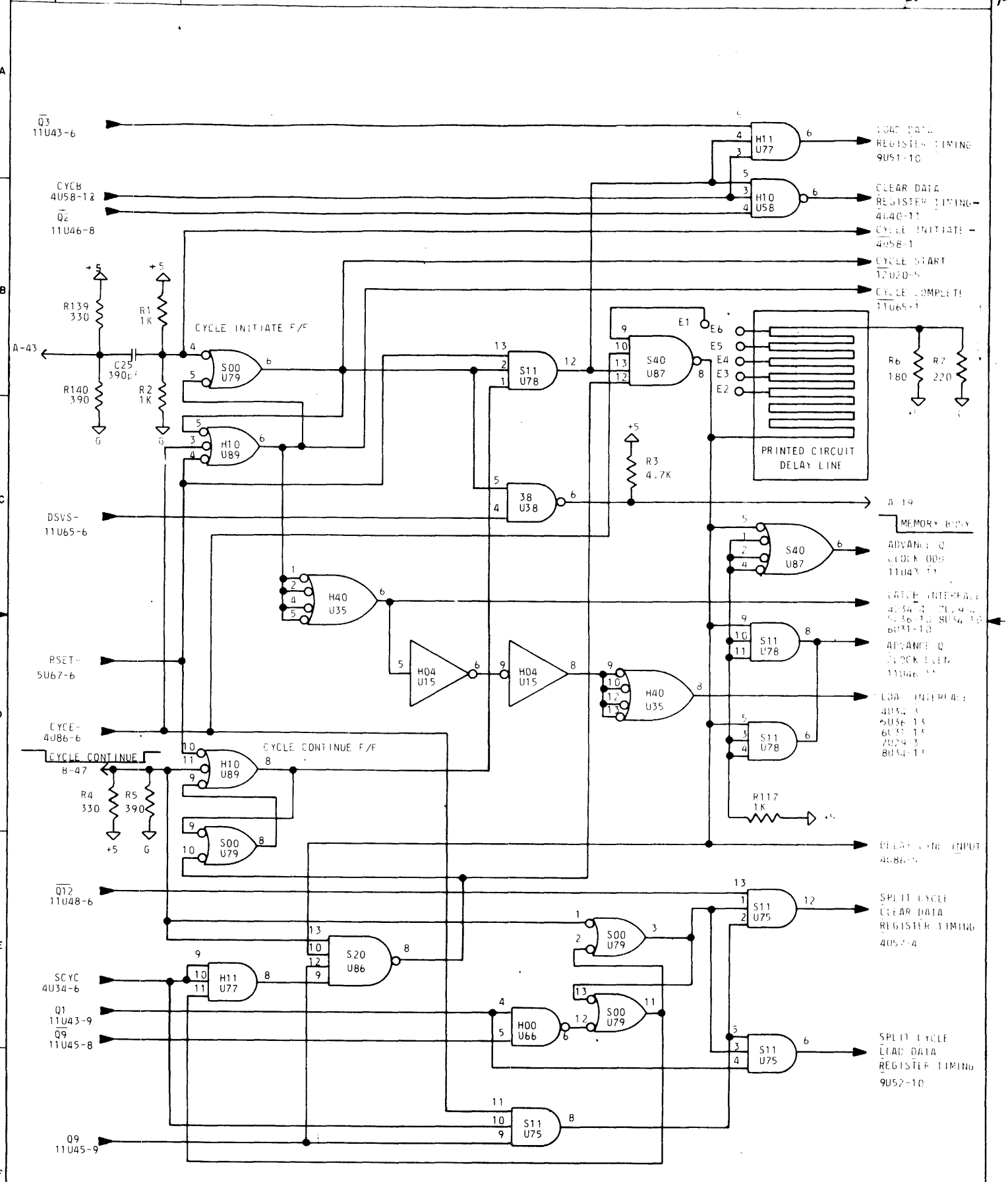

THE PRINTED CIRCUIT DELAY LINE IS ADJUSTED BY PLACING A JUMPER WIRE BETWEEN E1 AND ONE OF THE FOLLOWING: E2,E3,E4,E5,E6.

FABRI-TEK INC. MEMORY PRODUCTS DIVISION	TITLE SCHEMATIC TIMING AND CONTROL ASSEMBLY			
	DWG. NO. C 138-001707	MODEL	VERS.	PAGE 3

E.C.O. HIST.	#15473 REV B	ECO 15637 REV C

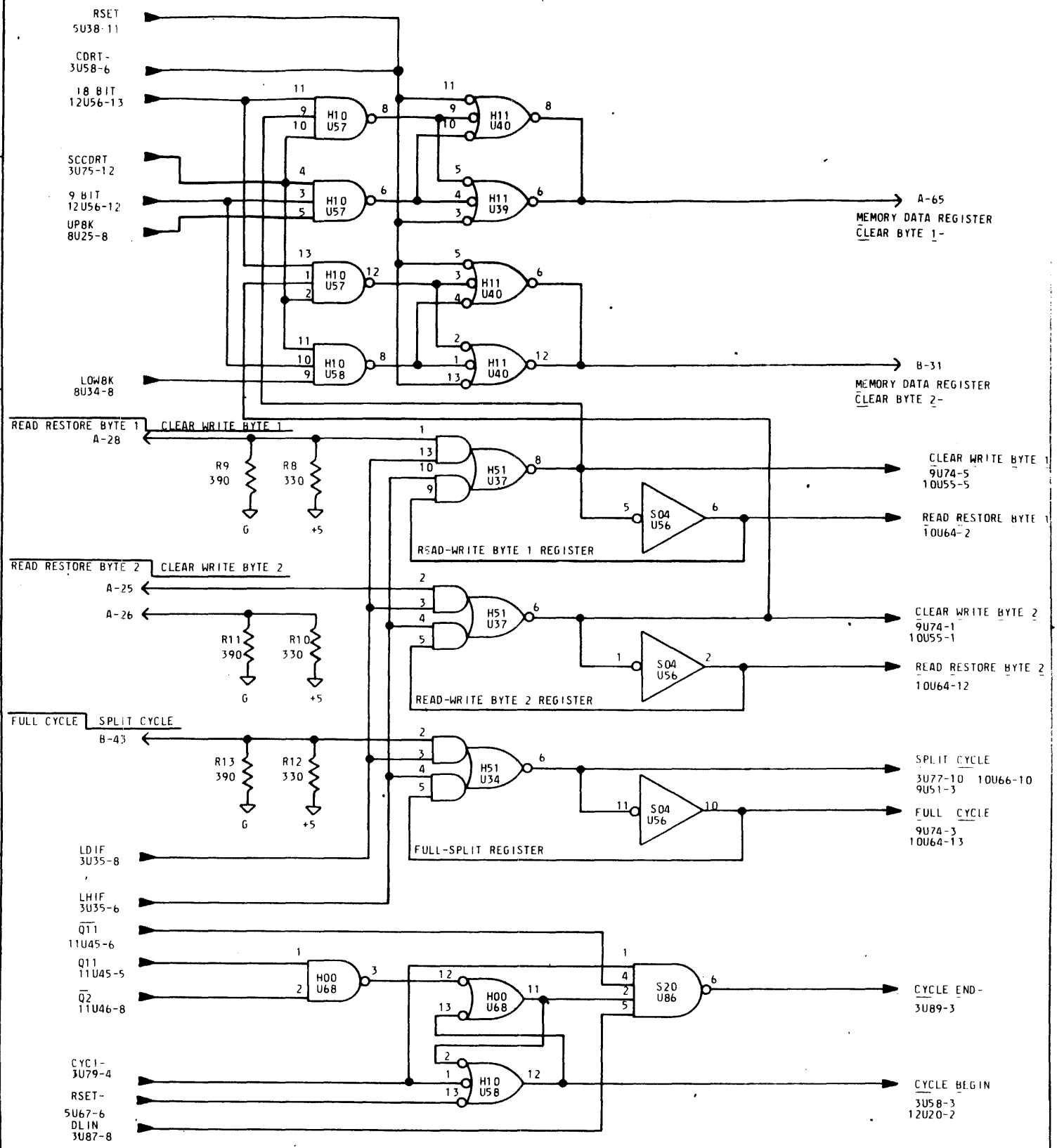

FABRI-TEK INC. MEMORY PRODUCTS DIVISION	TITLE: SCHEMATIC TIMING AND CONTROL ASSEMBLY			
	DWG. NO. C 138-001 707	MODEL	VERS.	PAGE 4

E.C.O. HIST.	#15473 REV B	ECO 15697 REV C			

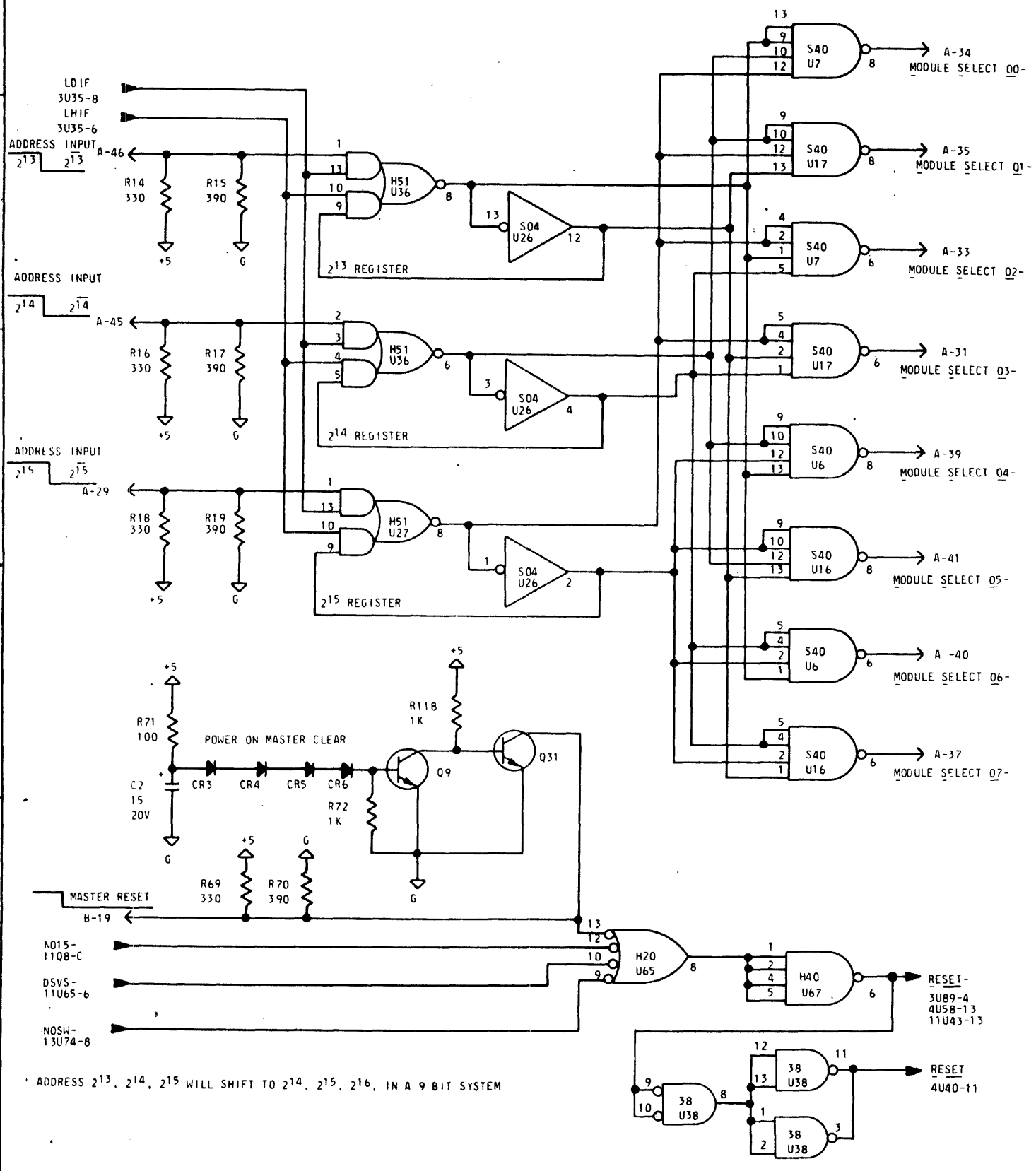

ADDRESS 2^{13}, 2^{14}, 2^{15} WILL SHIFT TO 2^{14}, 2^{15}, 2^{16}, IN A 9 BIT SYSTEM

FABRI-TEK INC. MEMORY PRODUCTS DIVISION	TITLE: SCHEMATIC TIMING AND CONTROL ASSEMBLY			
	DWG. NO. C: 138-001707	MODEL	VERS.	PAGE: 5

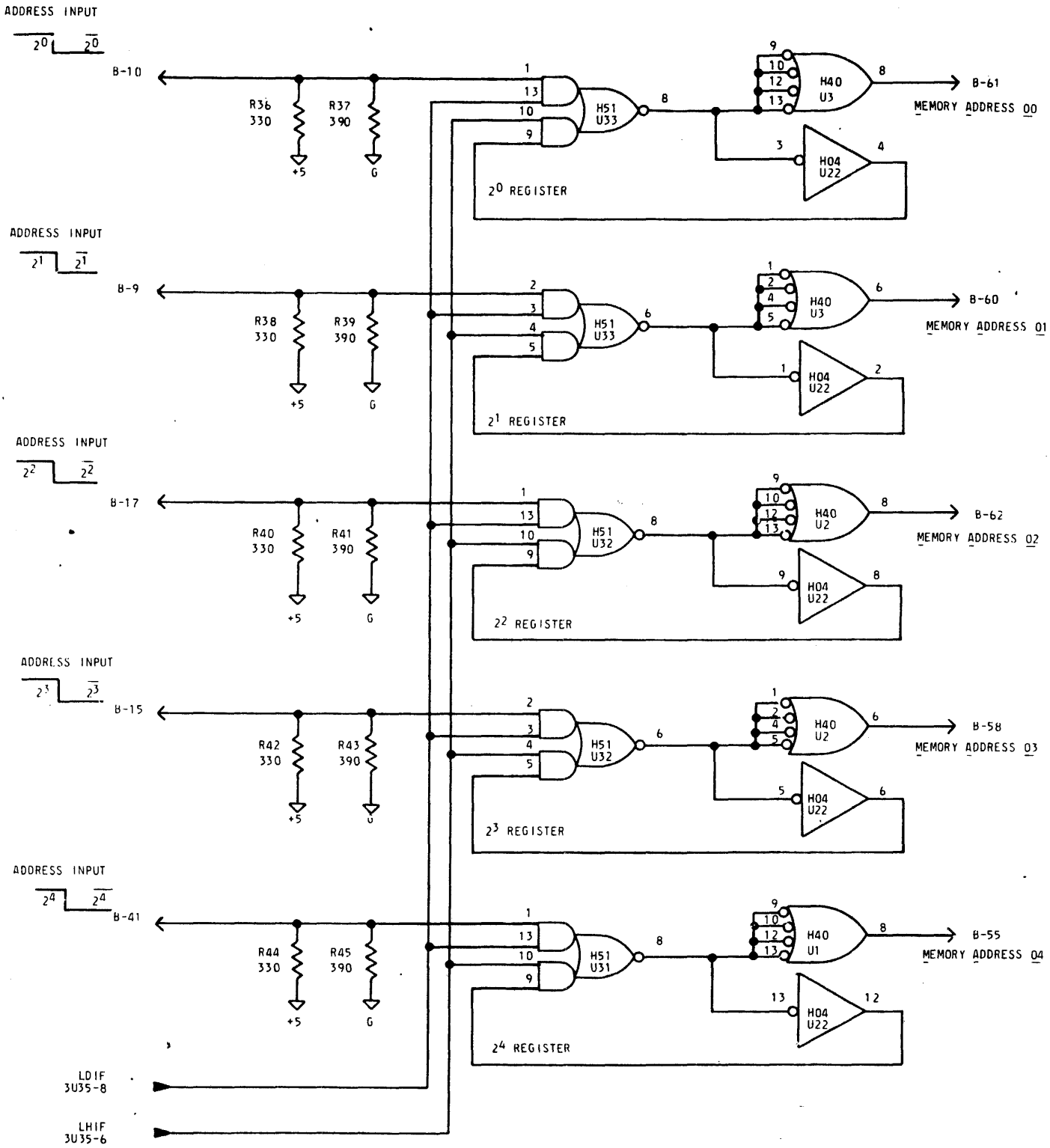
ADDRESS INPUT
2^0 $\overline{2^0}$
B-10
R36 330
R37 390
+5
G
H51 U33
H40 U3
H04 U22
2^0 REGISTER
B-61
MEMORY ADDRESS 00
ADDRESS INPUT
2^1 $\overline{2^1}$
B-9
R38 330
R39 390
H51 U33
H40 U3
H04 U22
2^1 REGISTER
B-60
MEMORY ADDRESS 01
ADDRESS INPUT
2^2 $\overline{2^2}$
B-17
R40 330
R41 390
H51 U32
H40 U2
H04 U22
2^2 REGISTER
B-62
MEMORY ADDRESS 02
ADDRESS INPUT
2^3 $\overline{2^3}$
B-15
R42 330
R43 390
H51 U32
H40 U2
H04 U22
2^3 REGISTER
B-58
MEMORY ADDRESS 03
ADDRESS INPUT
2^4 $\overline{2^4}$
B-41
R44 330
R45 390
H51 U31
H40 U1
H04 U22
2^4 REGISTER
B-55
MEMORY ADDRESS 04
LDIF
3U35-8
LHIF
3U35-6

E.C.O. #15462 REV A
HIST.

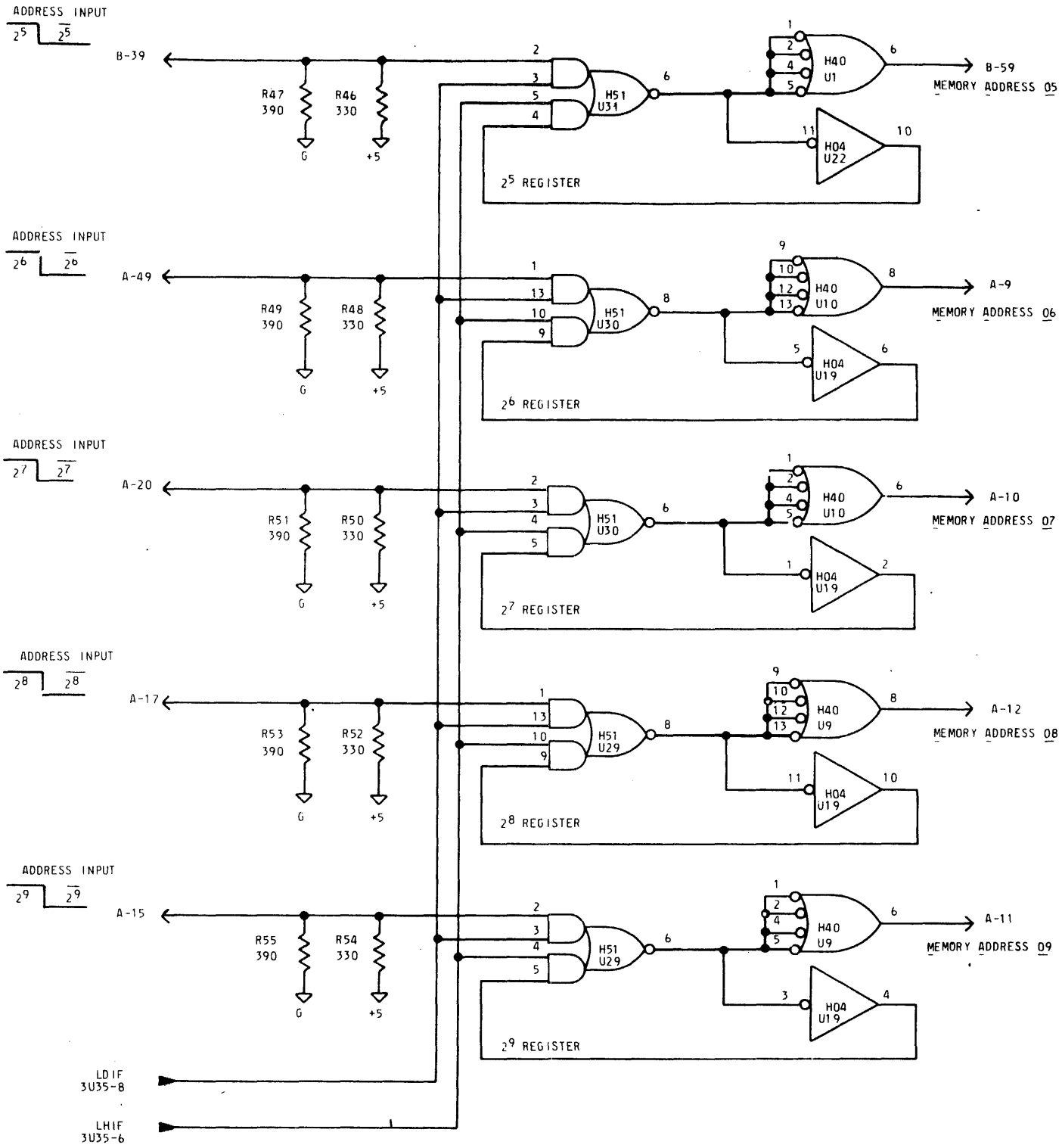

FABRI-TEK INC. MEMORY PRODUCTS DIVISION	TITLE: SCHEMATIC TIMING AND CONTROL ASSEMBLY			
	DWG. NO. C: 138-001707	MODEL:	VERS.:	PAGE: 7

E.C.O. HIST.	ECO 15637 REV C

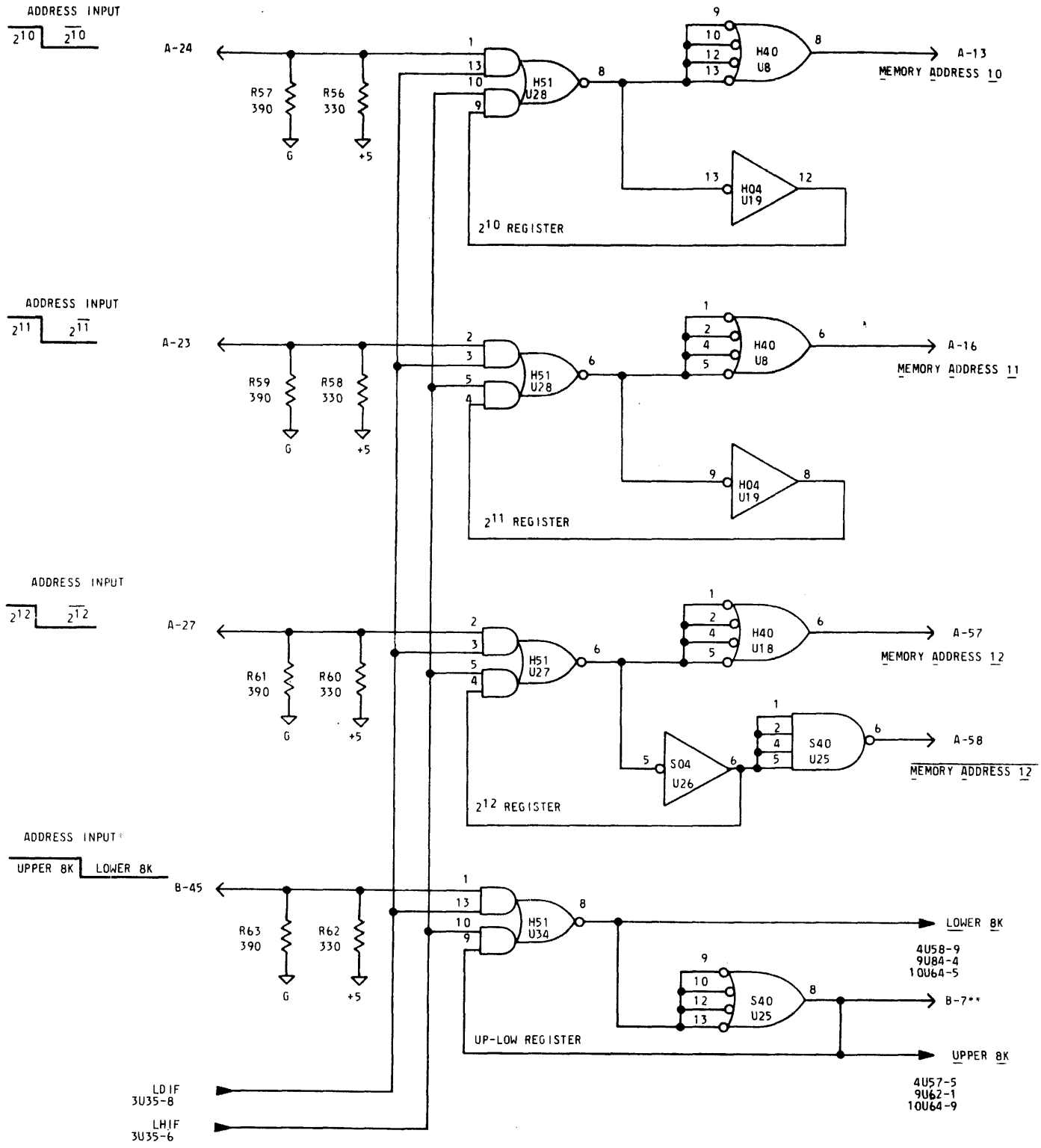

* USE ONLY WITH 9 BIT SYSTEM, WILL BE DRIVEN BY 2^{13}.

** NOT USED

FABRI-TEK INC. MEMORY PRODUCTS DIVISION	TITLE: SCHEMATIC TIMING AND CONTROL ASSEMBLY			
	DWG. NO. C 138-001707	MODEL	VERS.	PAGE 8

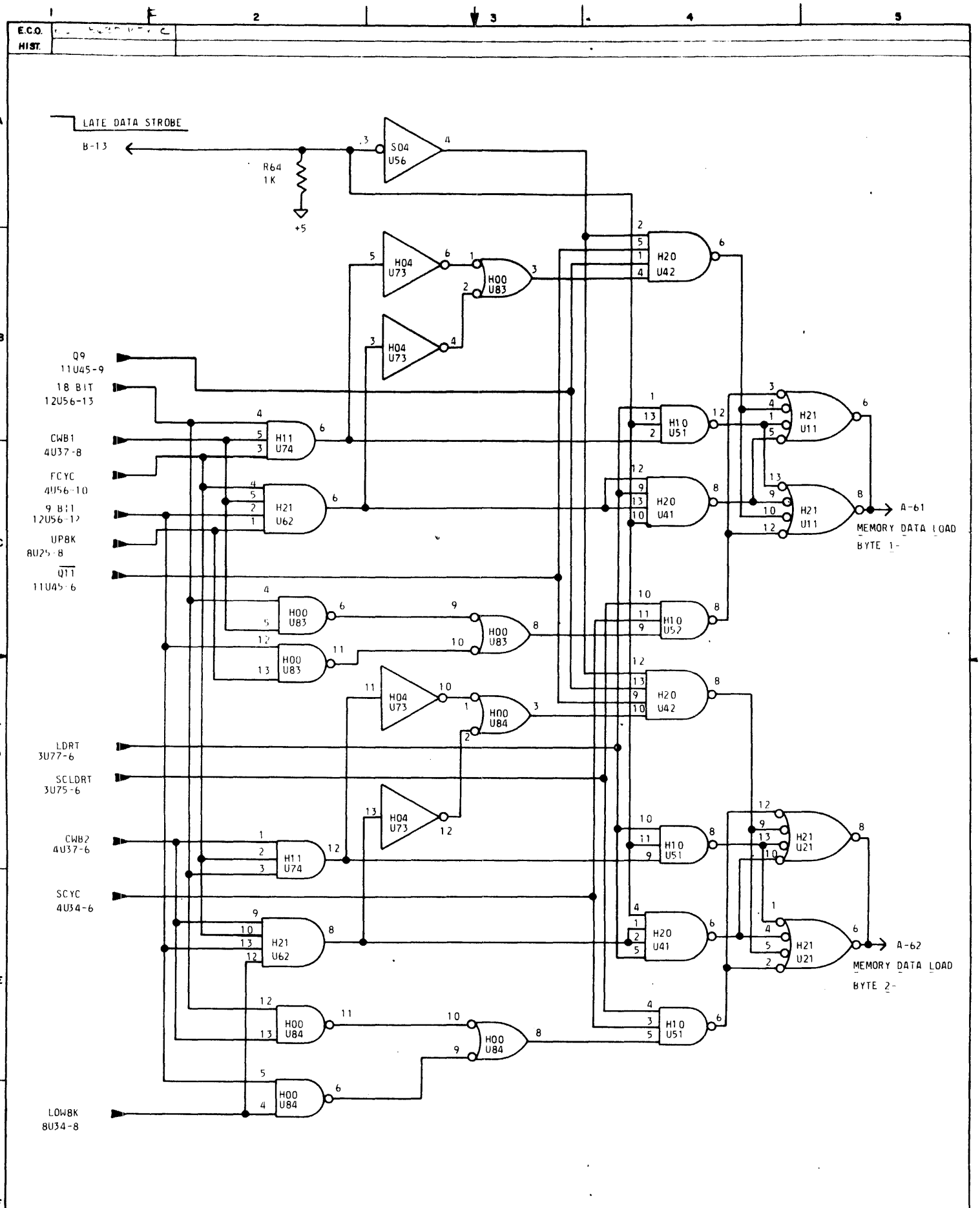

FABRI-TEK INC.
MEMORY PRODUCTS DIVISION

TITLE	SCHEMATIC TIMING AND CONTROL ASSEMBLY			
DWG. NO. C	138-001707	MODEL	VERS.	PAGE 9

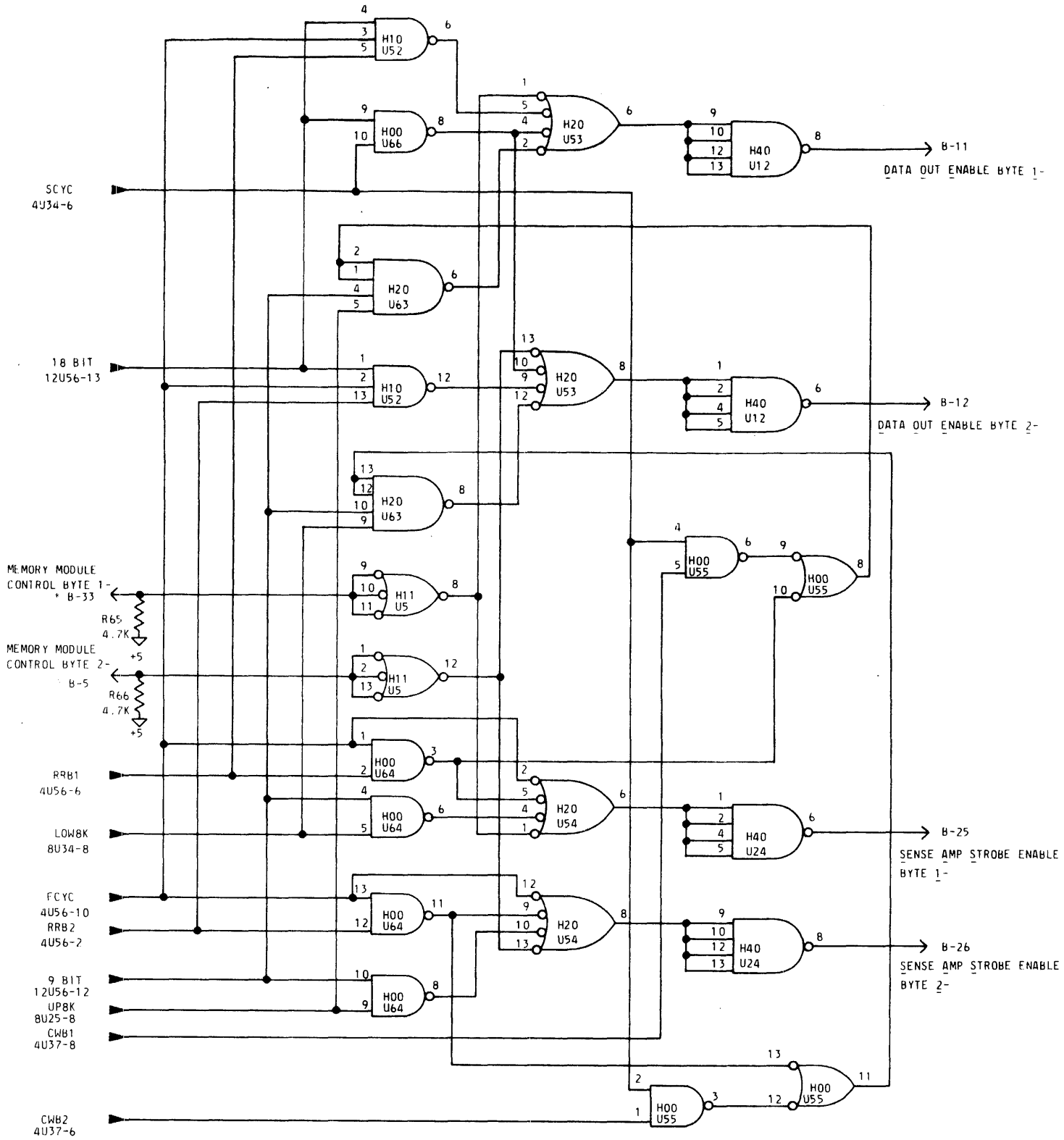

* FOR END USER USE ONLY.
INPUTS ARE LEFT OPEN FOR O.E.M.

FABRI-TEK INC. MEMORY PRODUCTS DIVISION	TITLE: SCHEMATIC TIMING AND CONTROL ASSEMBLY			
	DWG. NO. C 138-001707	MODEL	VERS.	PAGE 10

E.C.O. HIST.	# 15462 REV A	# 15473 REV B	000

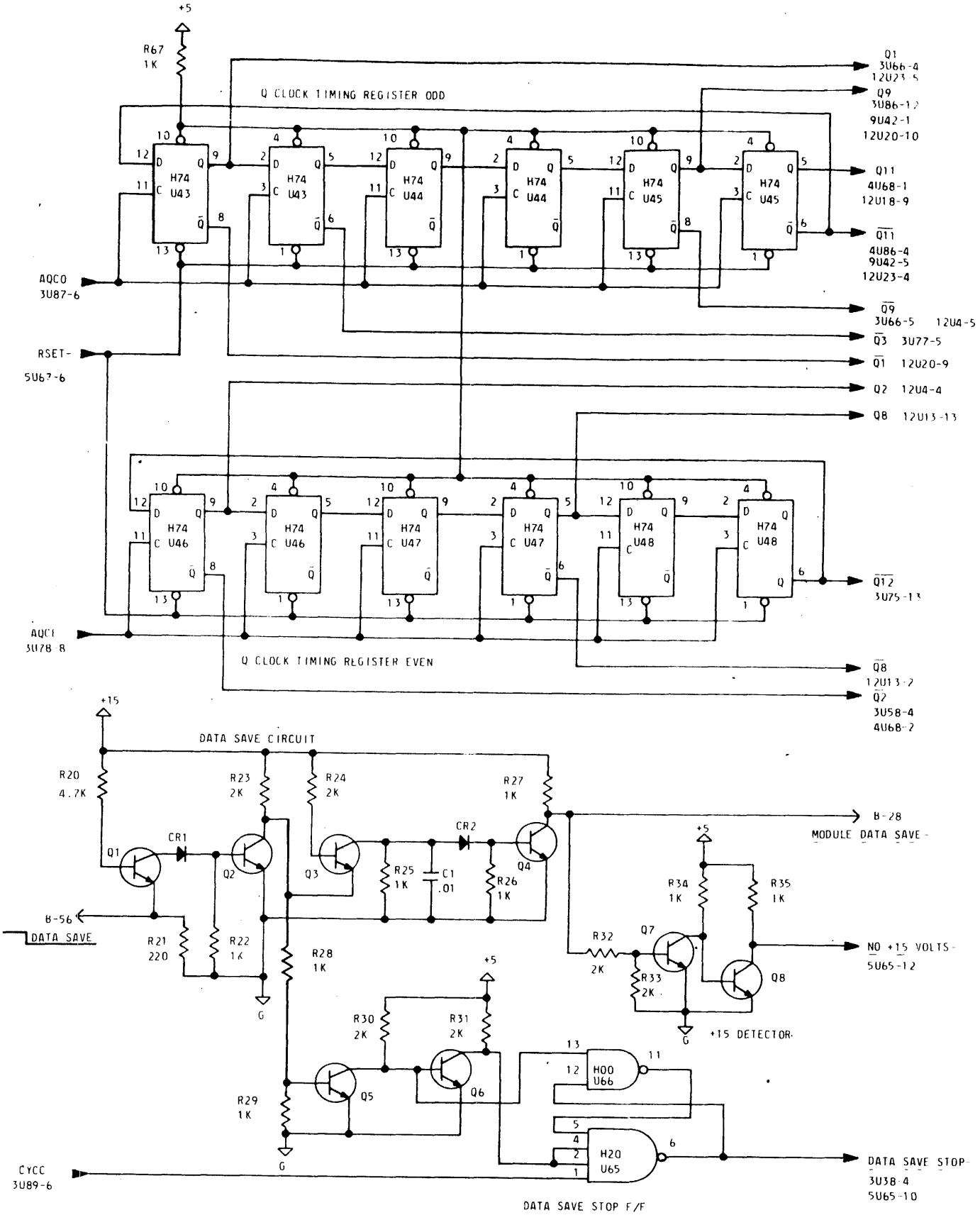

FABRI-TEK INC. MEMORY PRODUCTS DIVISION	TITLE: SCHEMATIC TIMING AND CONTROL ASSEMBLY			
	DWG. NO. C 138-001707	MODEL	VERS.	PAGE 11

E.C.O.	# 15462 REV. A	006
HIST.		

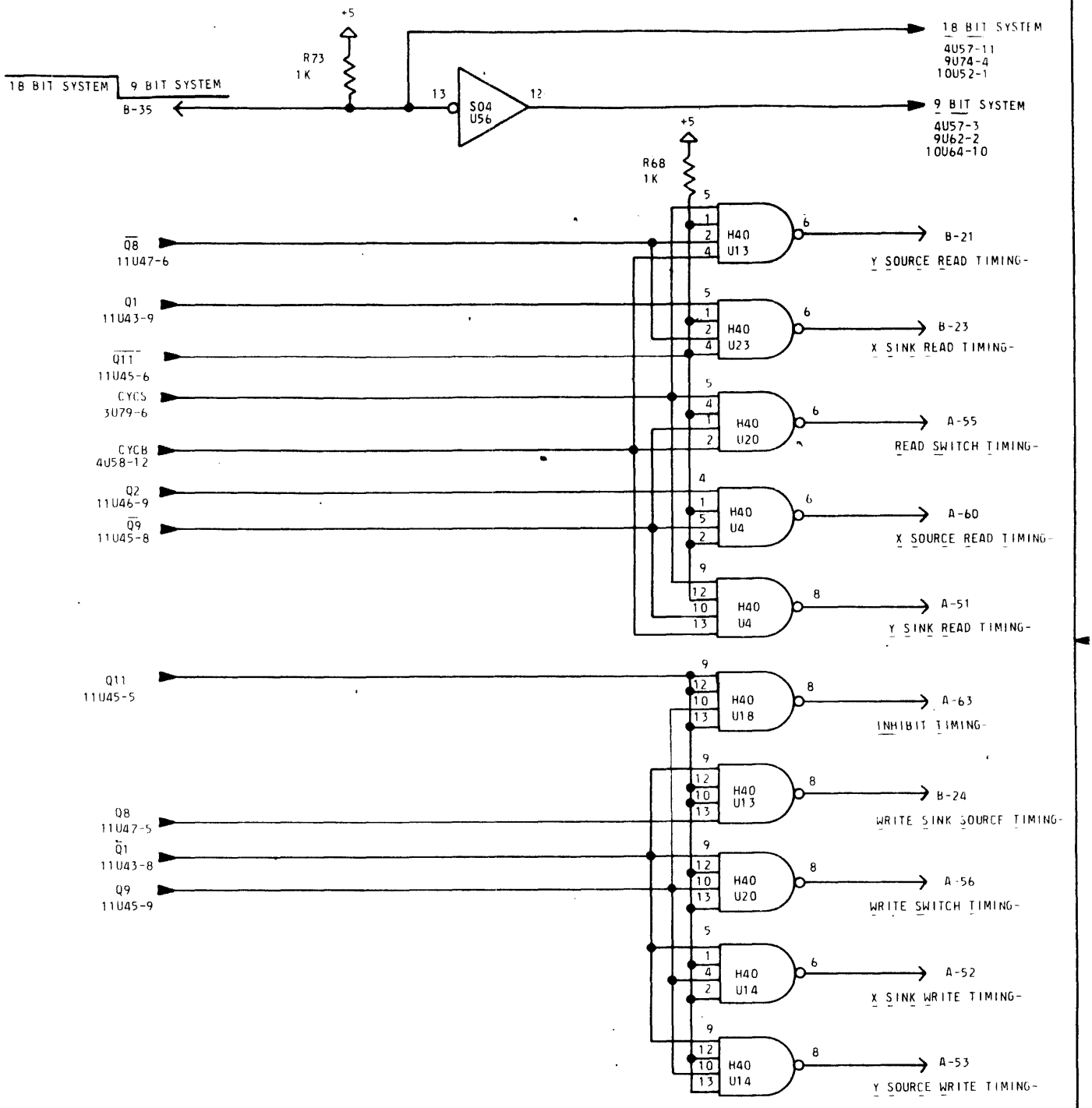

FABRITEK INC. MEMORY PRODUCTS DIVISION	TITLE	SCHEMATIC TIMING AND CONTROL ASSEMBLY			
	DWG. NO. C	138-001707	MODEL	VERS.	PAGE 12

E.C.O.	EC 5845 REV D
HIST	

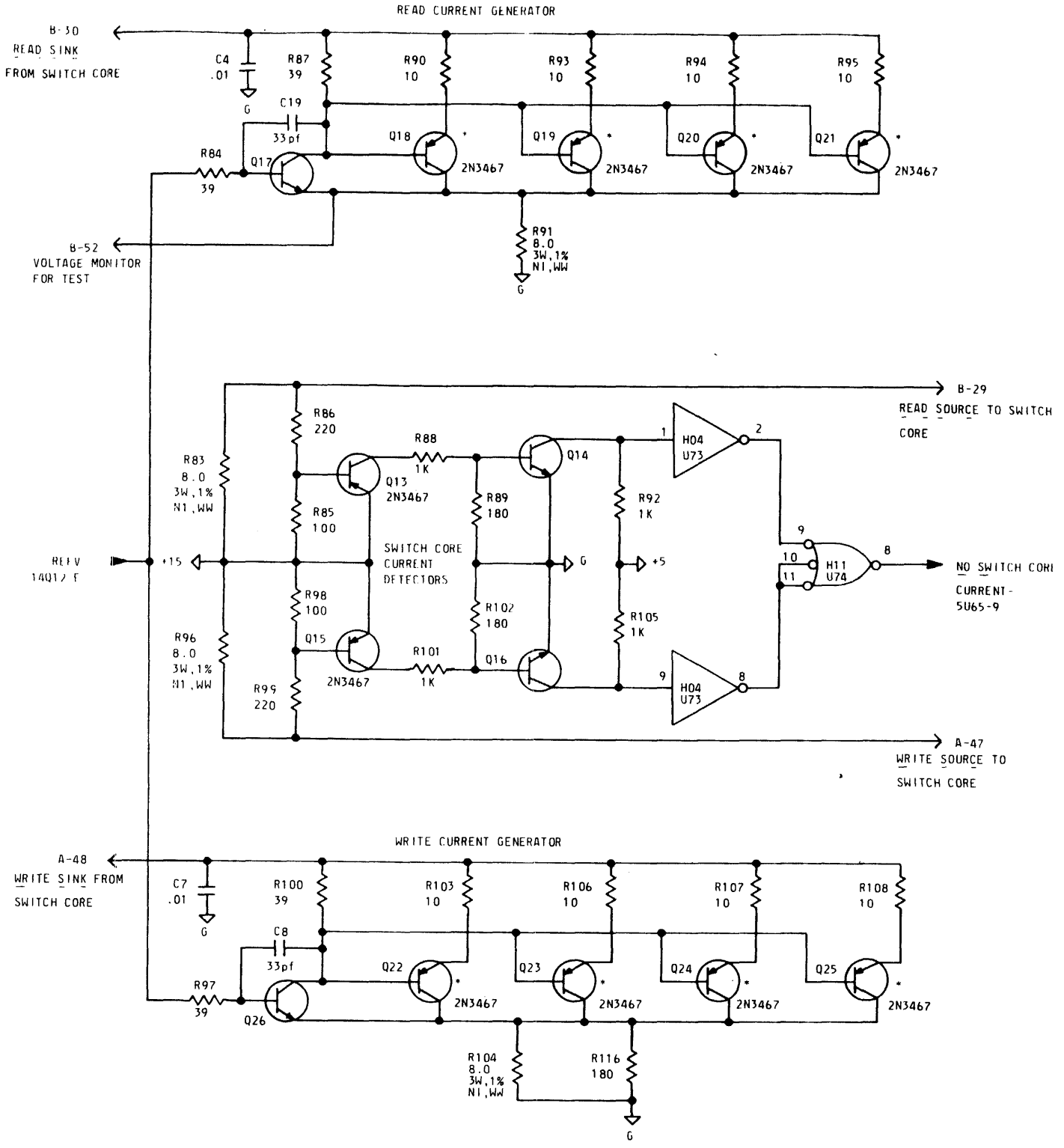

* HEAT SINKED

FABRI-TEK INC. MEMORY PRODUCTS DIVISION	TITLE: SCHEMATIC TIMING AND CONTROL ASSEMBLY			
	DWG. NO. C 138-001707	MODEL	VERS.	PAGE 13

ECO HIST	#15403 REV B	EC#15791 REV E	OF EC 17564		

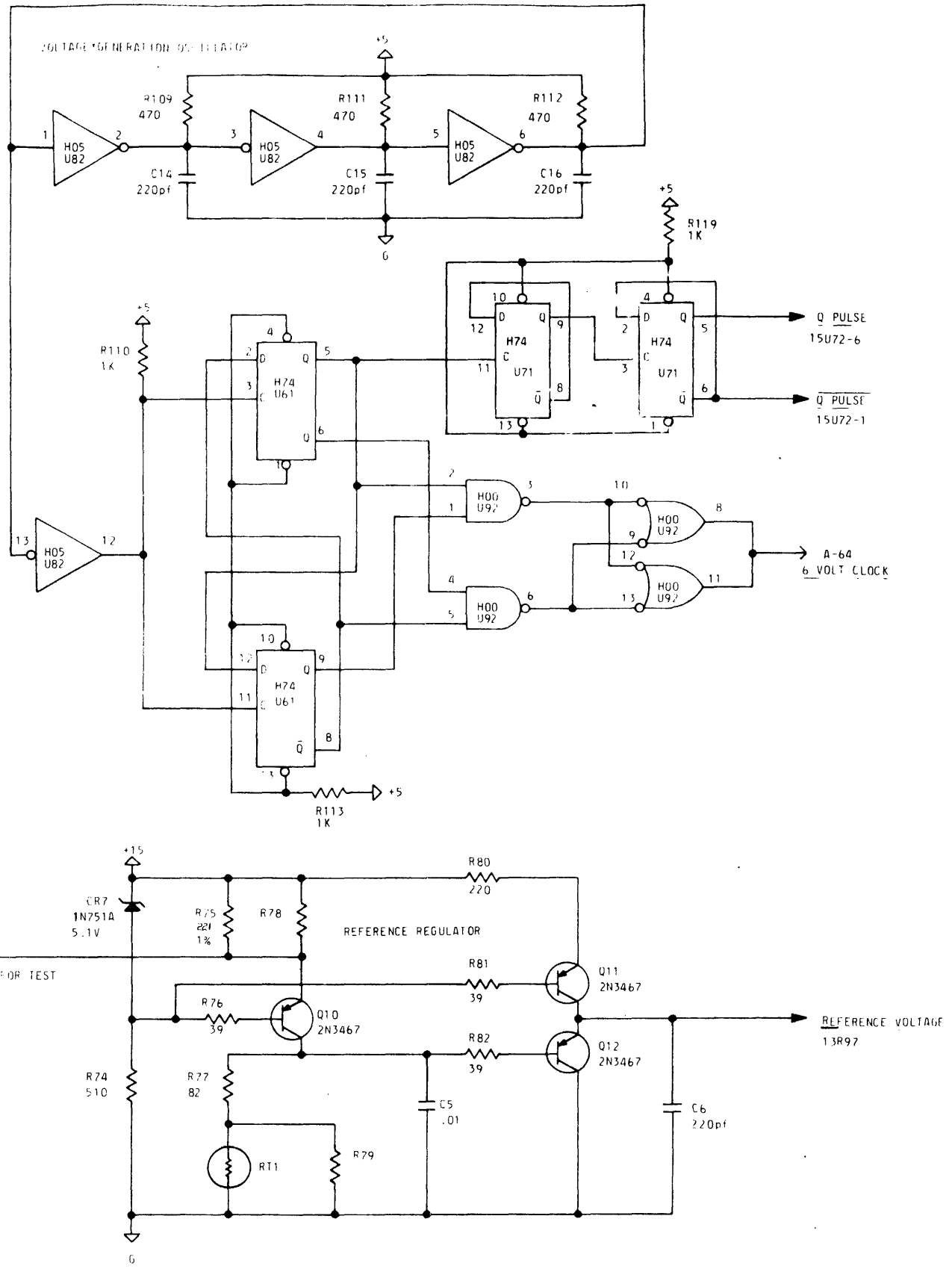

FABRITEK INC. MEMORY PRODUCTS DIVISION	TITLE: SCHEMATIC TIMING AND CONTROL ASSEMBLY			
	DWG. NO. C 138-001707	MODEL	VERS.	PAGE 14

E.C.O. HIST.	#15473 REV B	ECO 15637 REV C

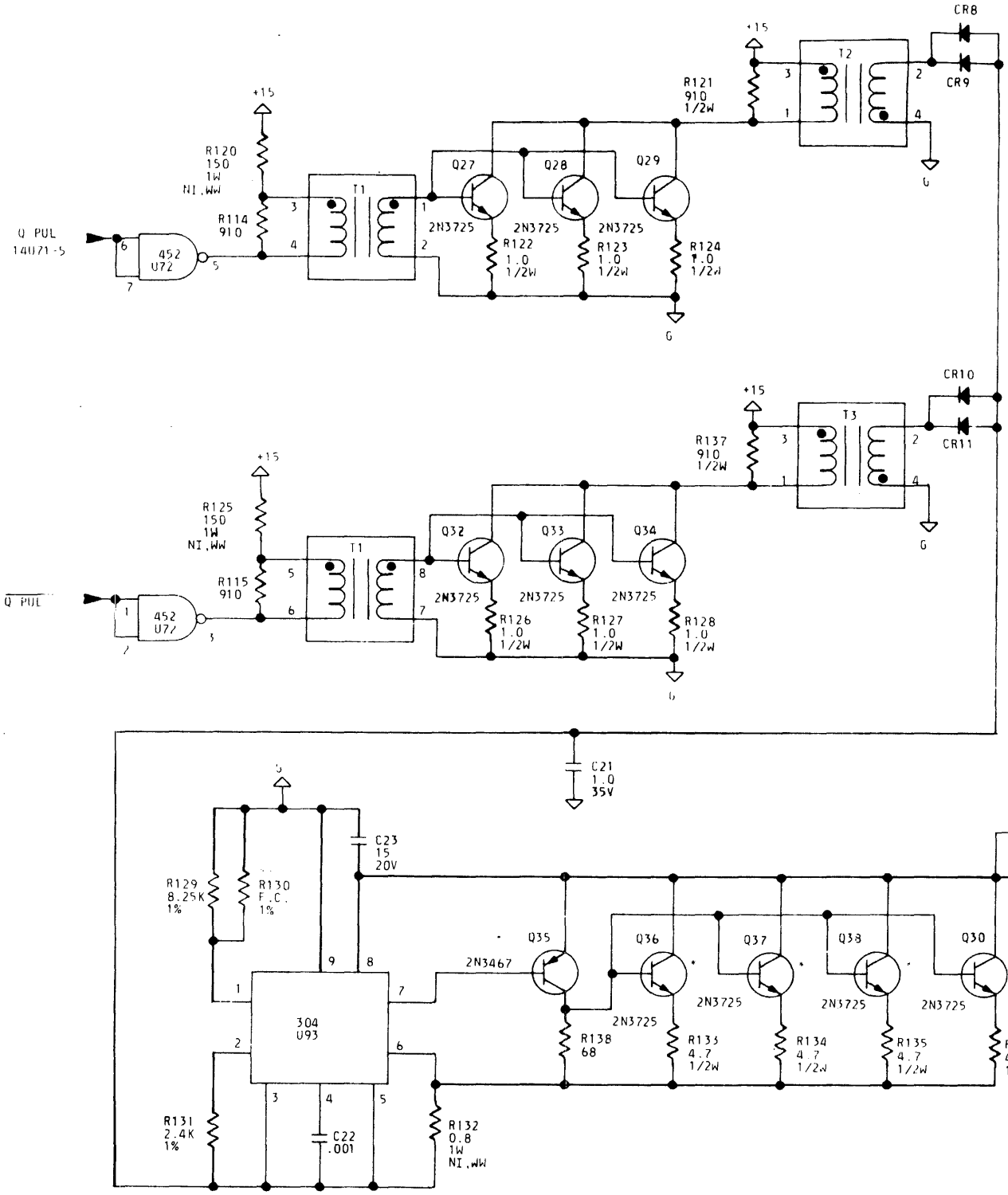

* HEAT SINK

** F.C. MEANS FACTORY SELECT. THE VALUE OF THIS RESISTOR IS DETERMINED BY THE FACTORY DURING TEST.

FABRI-TEK INC. MEMORY PRODUCTS DIVISION	TITLE: SCHEMATIC, TIMING AND CONTROL ASSEMBLY			
	DWG. NO. C 138-031707	MODEL	VERS.	PAGE 15

	1	2	3	4	5
EC HIST	00A-EC 18692	00B-EC 18735	00C-EC 19435		

NOTES: APPLICABLE THROUGHOUT THIS SCHEMATIC.

1. UNLESS OTHERWISE STATED:
   A. RESISTANCE VALUES ARE IN OHMS. RESISTORS ARE 5% TOLERANCE, 1/4 WATT.
   B. CAPACITANCE VALUES ARE IN MICROFARADS.
   C. ALL RESISTORS TO +5 ARE 330.
      ALL RESISTORS TO GND ARE 390.

2. JEDEC OR MANUFACTURER'S PART NUMBERS ARE FOR REFERENCE ONLY. FOR EXPLICIT DESCRIPTION OF THE DEVICE CHARACTERISTICS, REFER TO THE FABRI-TEK SPECIFICATION FOR THE FABRI-TEK PART NUMBER.

REVISION STATUS OF SHEETS	1	2	3	4	5	6	7	8	9	10	11	12	13	14	15	16	17	18	19	20	21	22
	00C	00C	00C				00C	00C	00C	00C	00C	00C										
	00B		00B	00B	00B	00B			00B													
	00A		00A																			

	DATE
DRAWN D. HANSEN	2-16-73
CHECKED D. Hansen	3-26-73
APPROVED	3-26-73

FABRI-TEK INC.
MEMORY PRODUCTS DIVISION

TITLE SCHEMATIC, 24K X 12 MULTIPLEXER

DWG. NO.	TYPE	VERS.	PAGE
C 138-001880	960-0500-00		1 OF 12

EC	OOC
HIST.	

MODULE CODE TABLE (BOXED NUMBERS INDICATE NOTES)			
CODE	VENDOR'S P/N	DESCRIPTION(POSITIVE LOGIC)	PINS
H04	[1] SN74H04	[3] HEX INVERTER	[4][8]
86	[1] SN7486	[3] QUAD 2-INPUT EX OR	[4][8]
H74	[1] SN74H74	[3] DUAL TYPE D FLIP-FLOP	[4][8]
38	[1] SN7438	[3] QUAD 2-INPUT POS NAND BUFFERS	[4][8]
123	[1] SN74123	[3] DUAL MONOSTABLE MV W/CLEAR	[5][9]
42	[1] SN7442	[3] 4 TO 10 LINE DECODER (1-OF-10)	[5][9]
157	[1] SN74157	[3] QUAD 2 LINE-TO-1 LINE SELECT	[5][9]
153	[1] SN74S153	[3] DUAL 4 LINE-TO-1 LINE SEL/MULTI	[5][9]
75	[1] SN7475	[3] QUAD BISTABLE LATCH	[ ][9]

NOTES: FOR REFERENCE ONLY

[1] TEXAS INSTRUMENTS INC.
[2] SPRAGUE ELECTRIC CO.
[3] TTL IC.H CODE PREFIX INDICATES HIGH SPEED, S PREFIX INDICATES SCHOTTKY-CLAMPED VERY HIGH SPEED
[4] +5VDC TERMINAL 14, GROUND TERMINAL 7
[5] +5VDC TERMINAL 16, GROUND TERMINAL 8
[6] +5VDC TERMINAL 5, GROUND TERMINAL 13
[7] +5VDC TERMINAL 8, GROUND TERMINAL 4

[8] 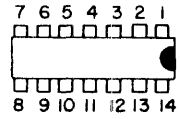

[9] 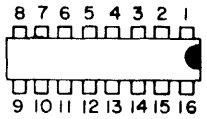

[10] 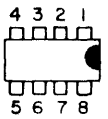

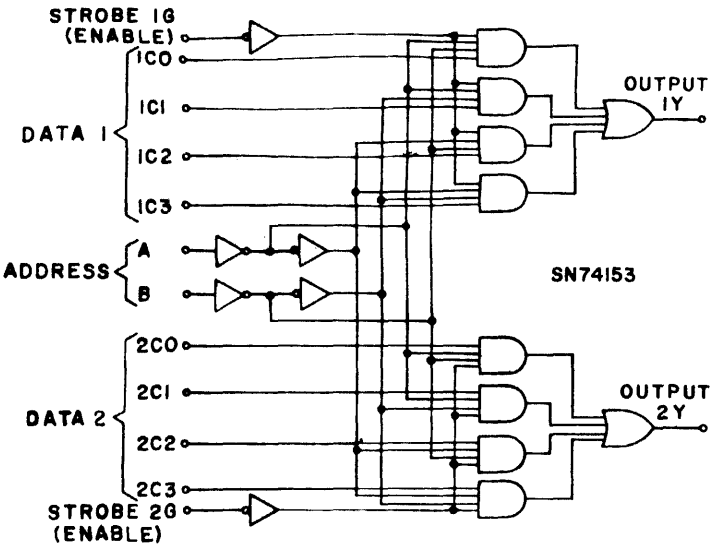

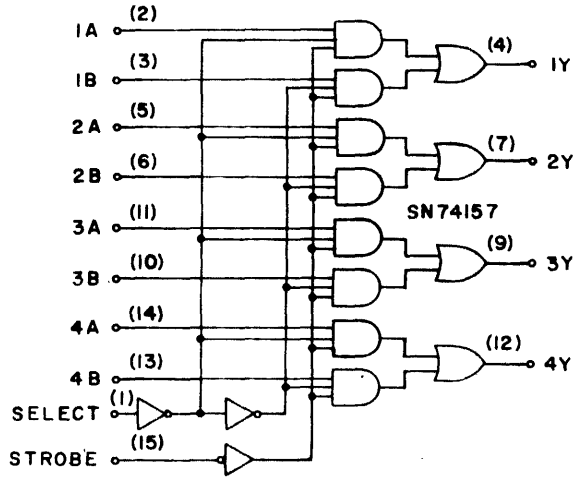

CODE	REF DESIG.	OUTPUT TERMINAL NO
UNUSED MODULE ELEMENTS		

POWER

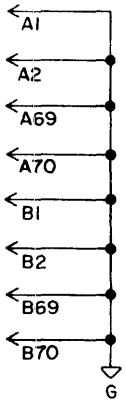

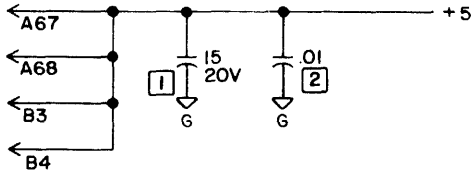

NOTES:
[1] A1C1 THRU F1C1, A10C1 THRU F10C1, A5C1.
[2] B1C2, C1C2, D1C2, E1C2, B2C1, B3C1, B4C1, F8C1, B7C1, B8C1, B9C1, F9C1, C2C1 THRU C9C1, D2C1 THRU D9C1, E2C1 THRU E9C1.

FABRI-TEK INC. MEMORY PRODUCTS DIVISION	TITLE SCHEMATIC, 24K X 12 MULTIPLEXER			
	DWG. NO. C 138-001880	TYPE	VERS.	PAGE 2

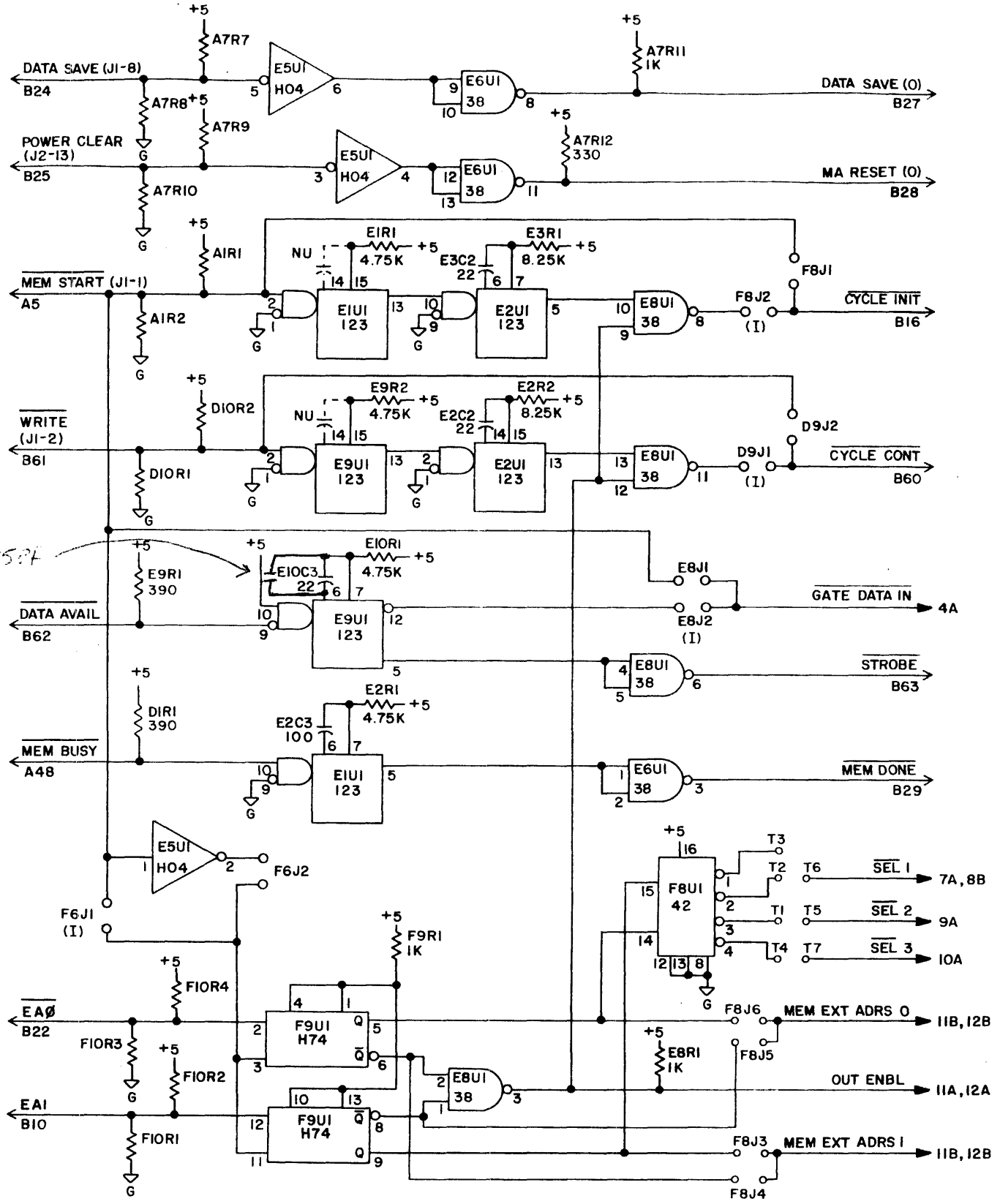

FABRI-TEK INC. MEMORY PRODUCTS DIVISION	TITLE: SCHEMATIC, 24K X 12 MULTIPLEXER			
	DWG. NO.: C 138-001880	TYPE	VERS.	PAGE: 3

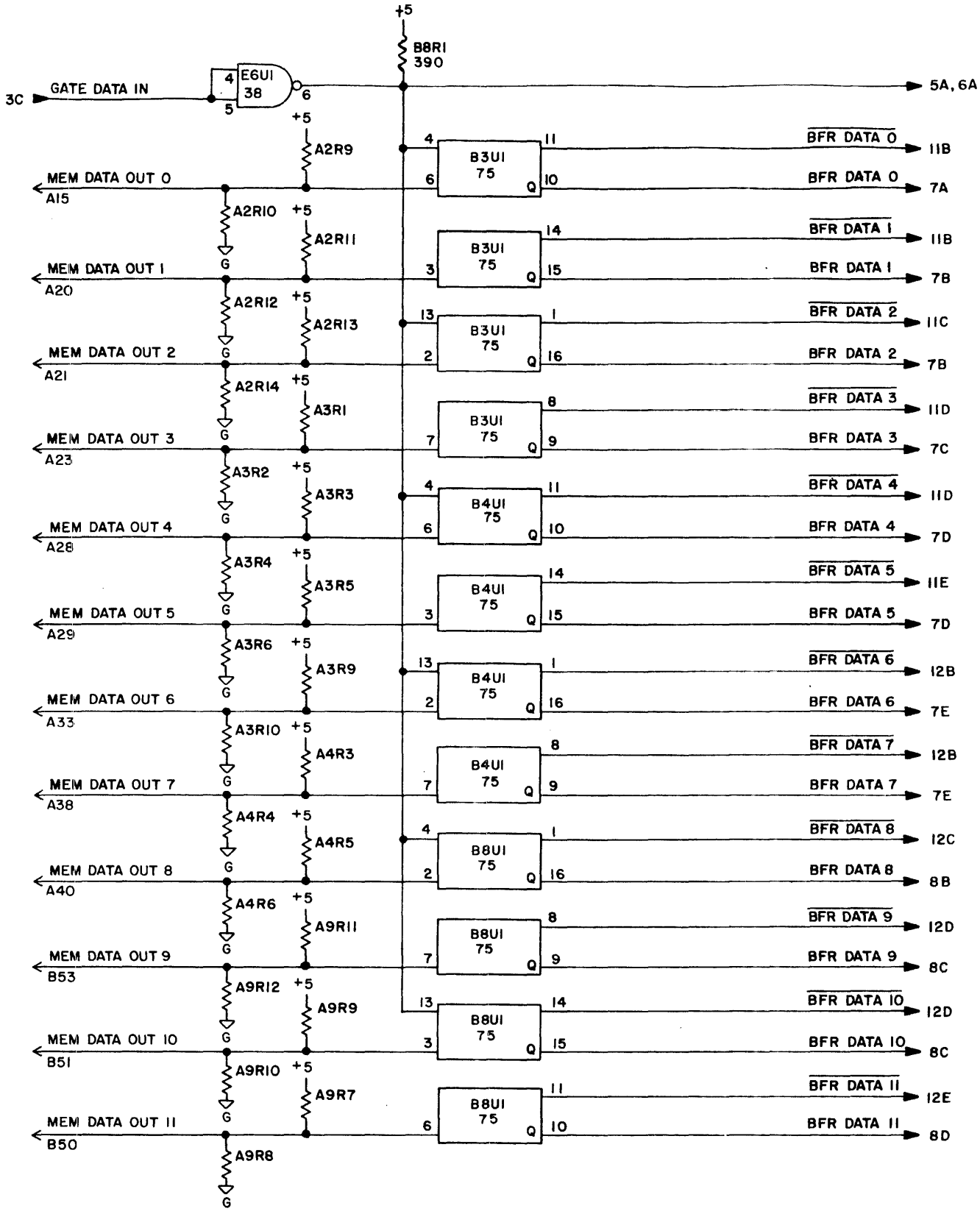

FABRI-TEK INC. MEMORY PRODUCTS DIVISION	TITLE SCHEMATIC, 24K X 12 MULTIPLEXER			
	DWG. NO. C 138-001880	TYPE	VERS.	PAGE 4

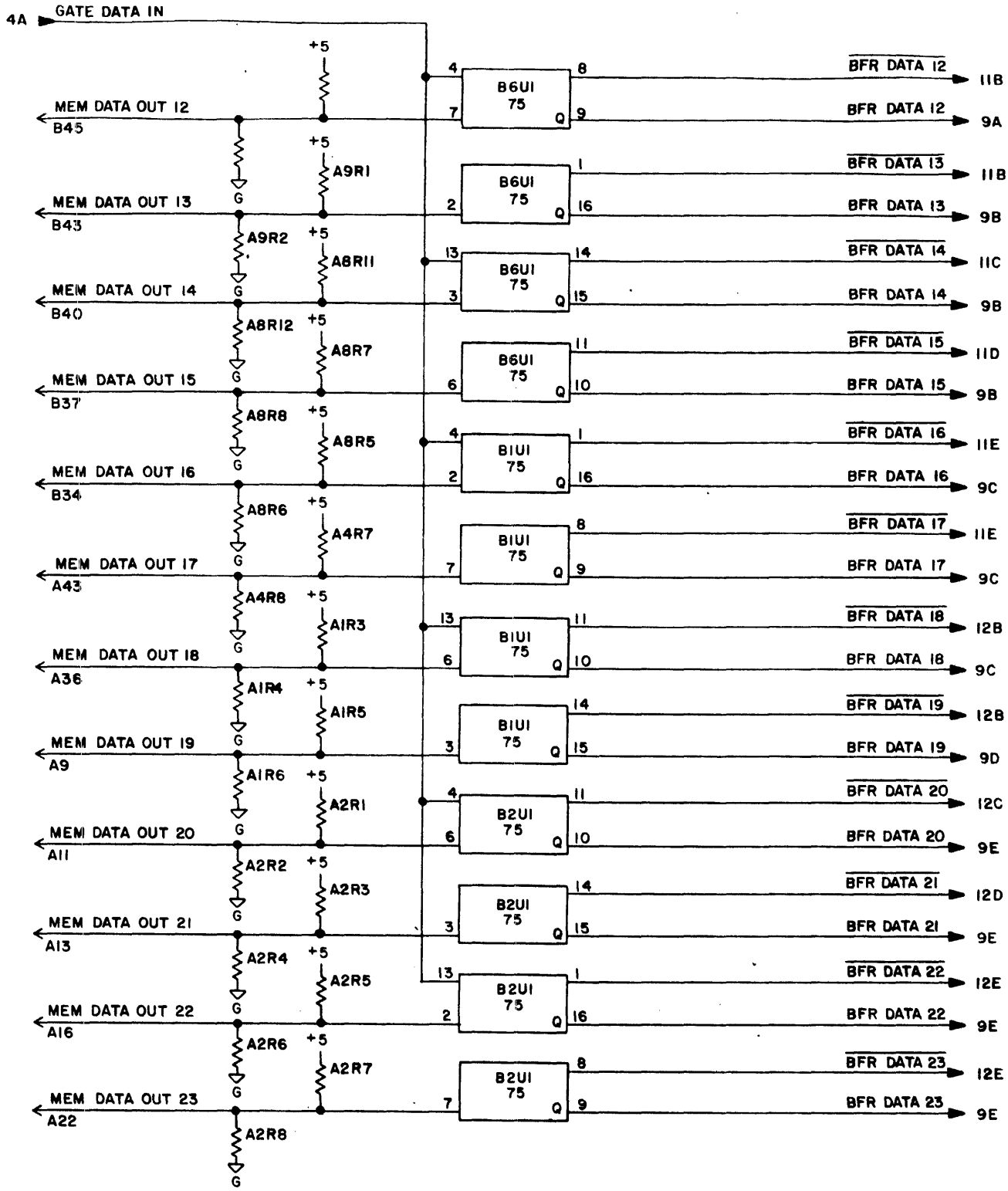

FABRI-TEK INC. MEMORY PRODUCTS DIVISION	TITLE SCHEMATIC, 24K X 12 MULTIPLEXER			
	DWG. NO. C 138-001880	TYPE	VERS.	PAGE 5

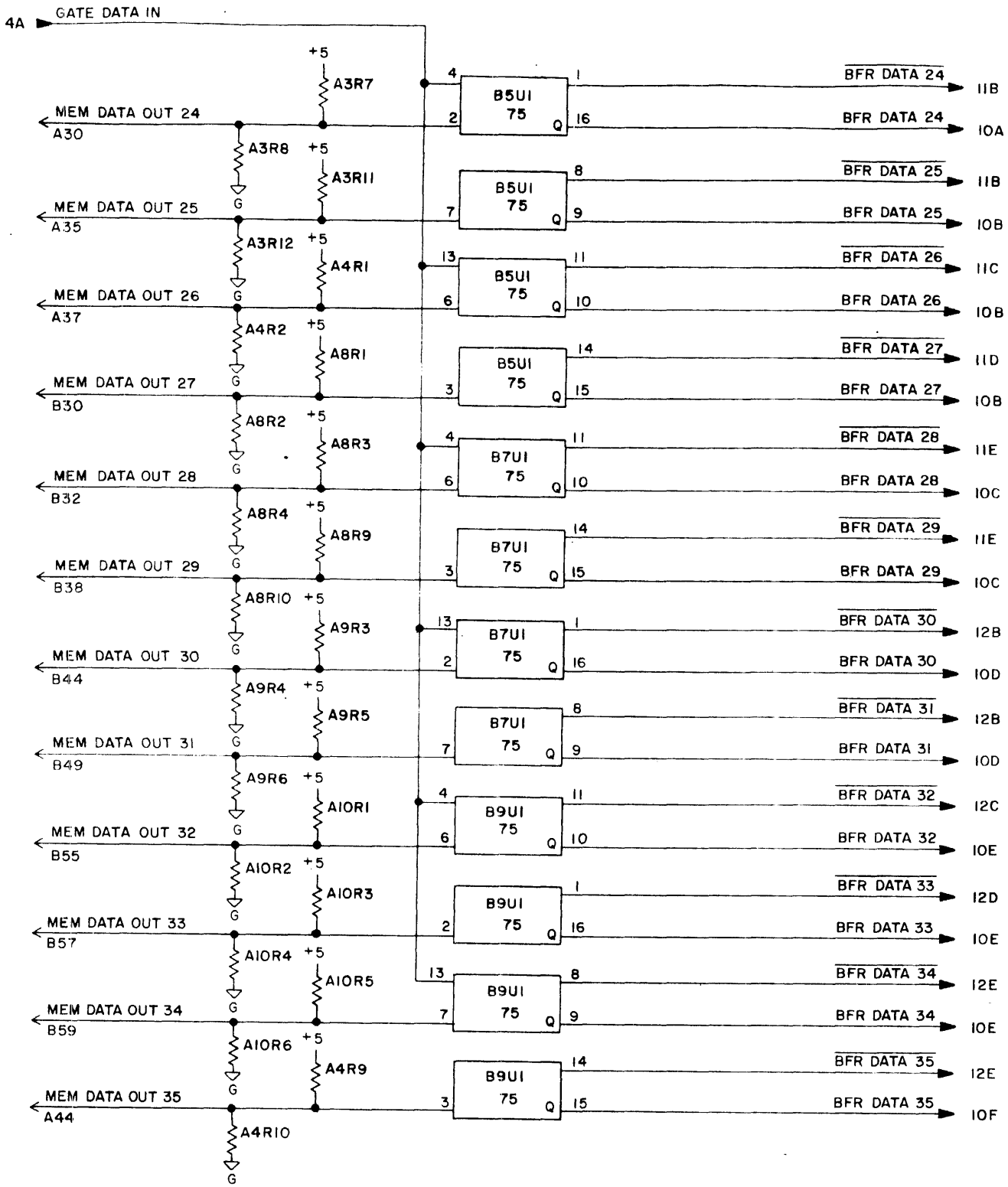

FABRI-TEK INC. MEMORY PRODUCTS DIVISION	TITLE SCHEMATIC, 24K X 12 MULTIPLEXER			
	DWG. NO. C 138-001880	TYPE	VERS.	PAGE 6

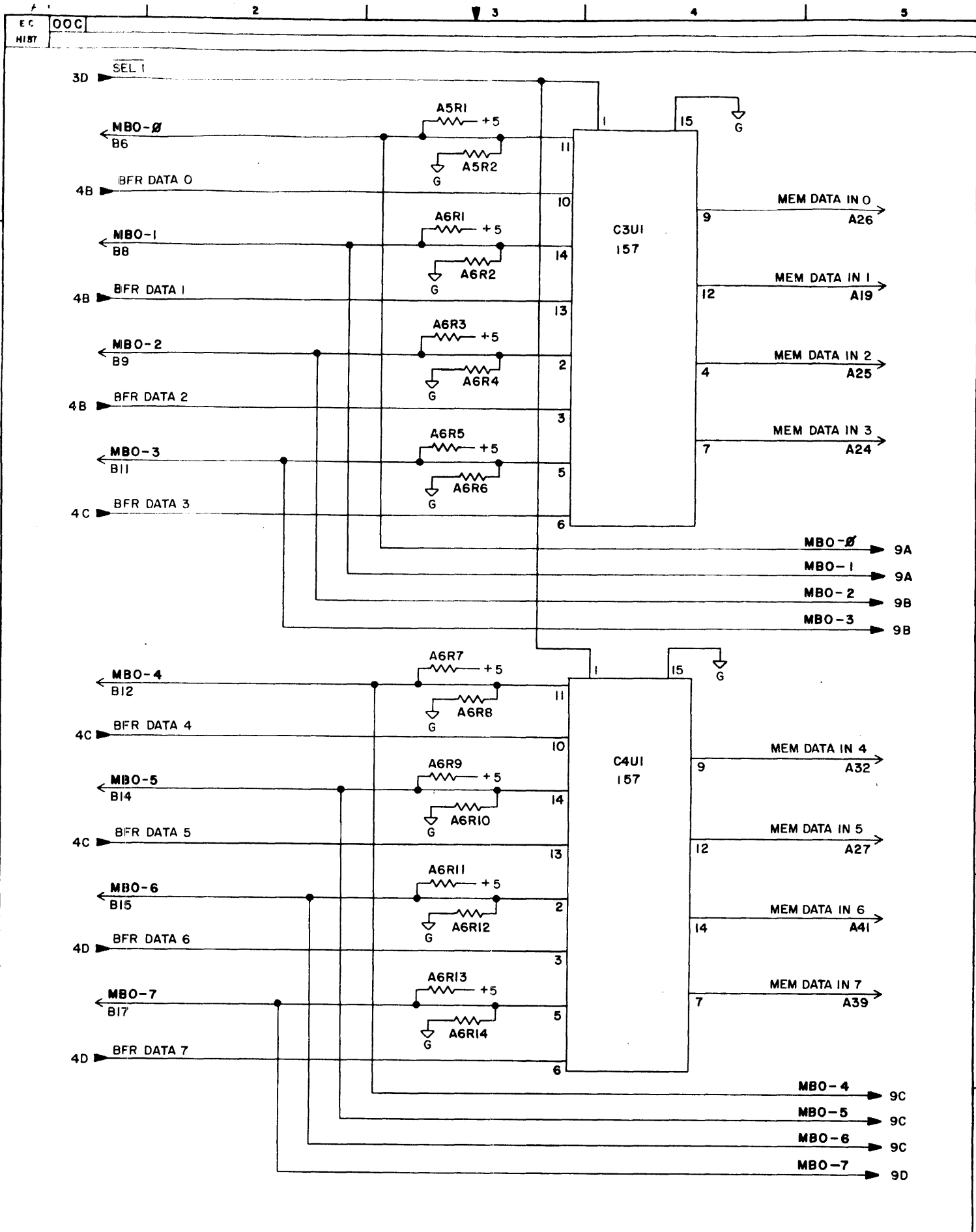

FABRI-TEK INC.
MEMORY PRODUCTS DIVISION

TITLE SCHEMATIC, 24K X 12 MULTIPLEXER				
DWG. NO. C 138-001880	TYPE	VERS.	PAGE 7	

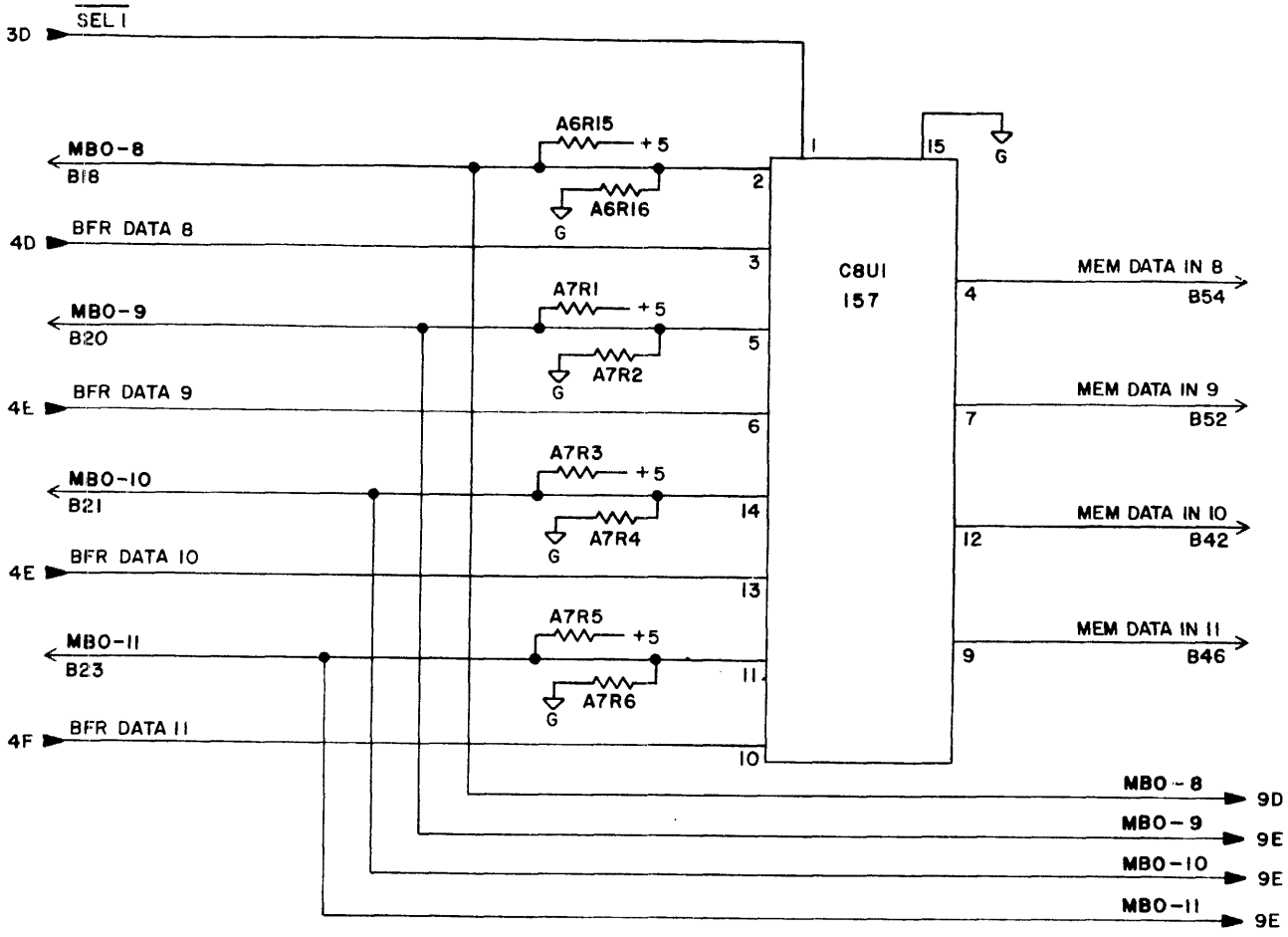

FABRI-TEK INC. MEMORY PRODUCTS DIVISION	TITLE SCHEMATIC, 24K X 12 MULTIPLEX			
	DWG. NO. C 138-001880	TYPE	VERS.	PAGE 8

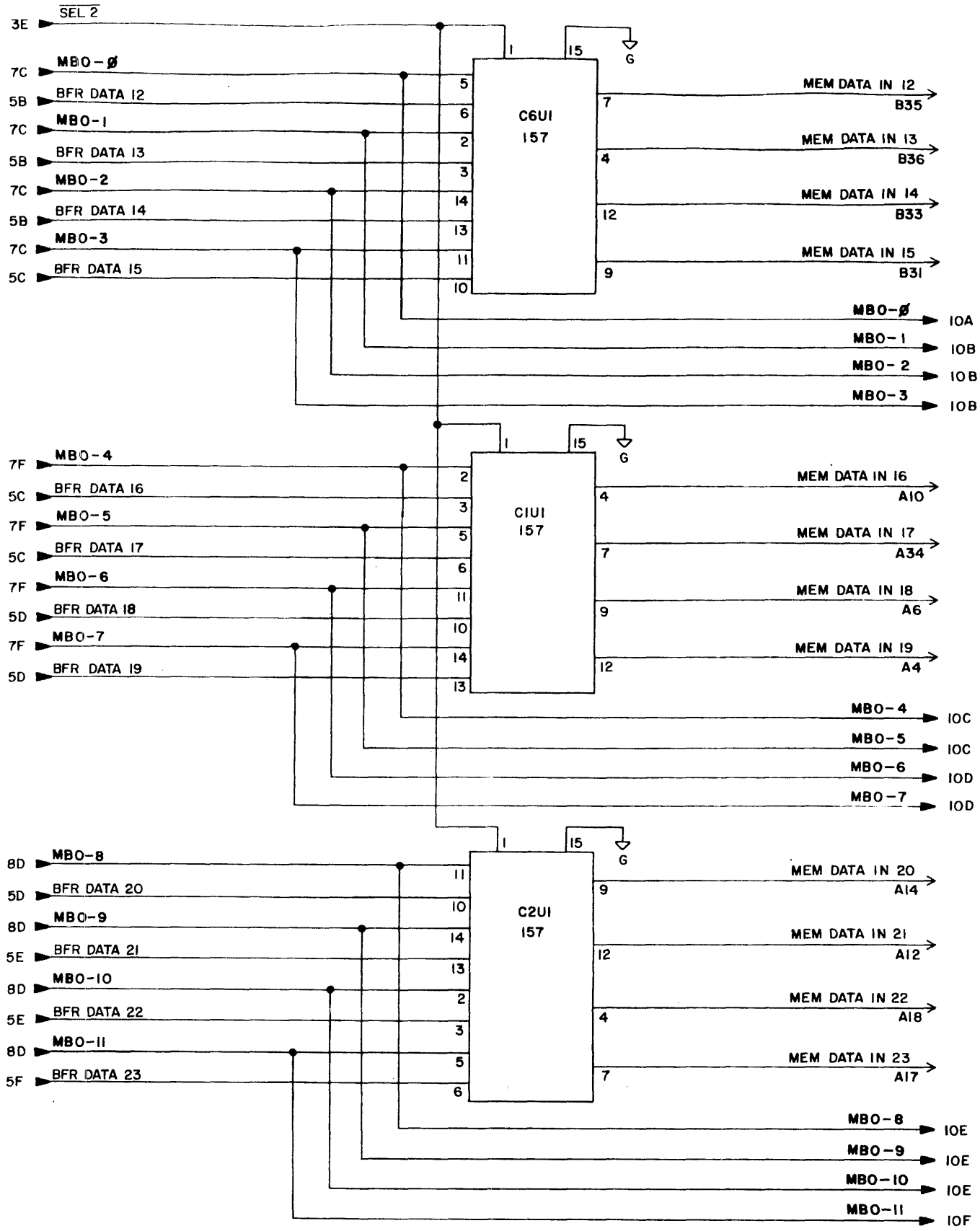

FABRI-TEK INC.
MEMORY PRODUCTS DIVISION

TITLE SCHEMATIC, 24K X 12 MULTIPLEXER

DWG. NO.	TYPE	VERS.	PAGE
C 138-001880			9

EC 000
HIST

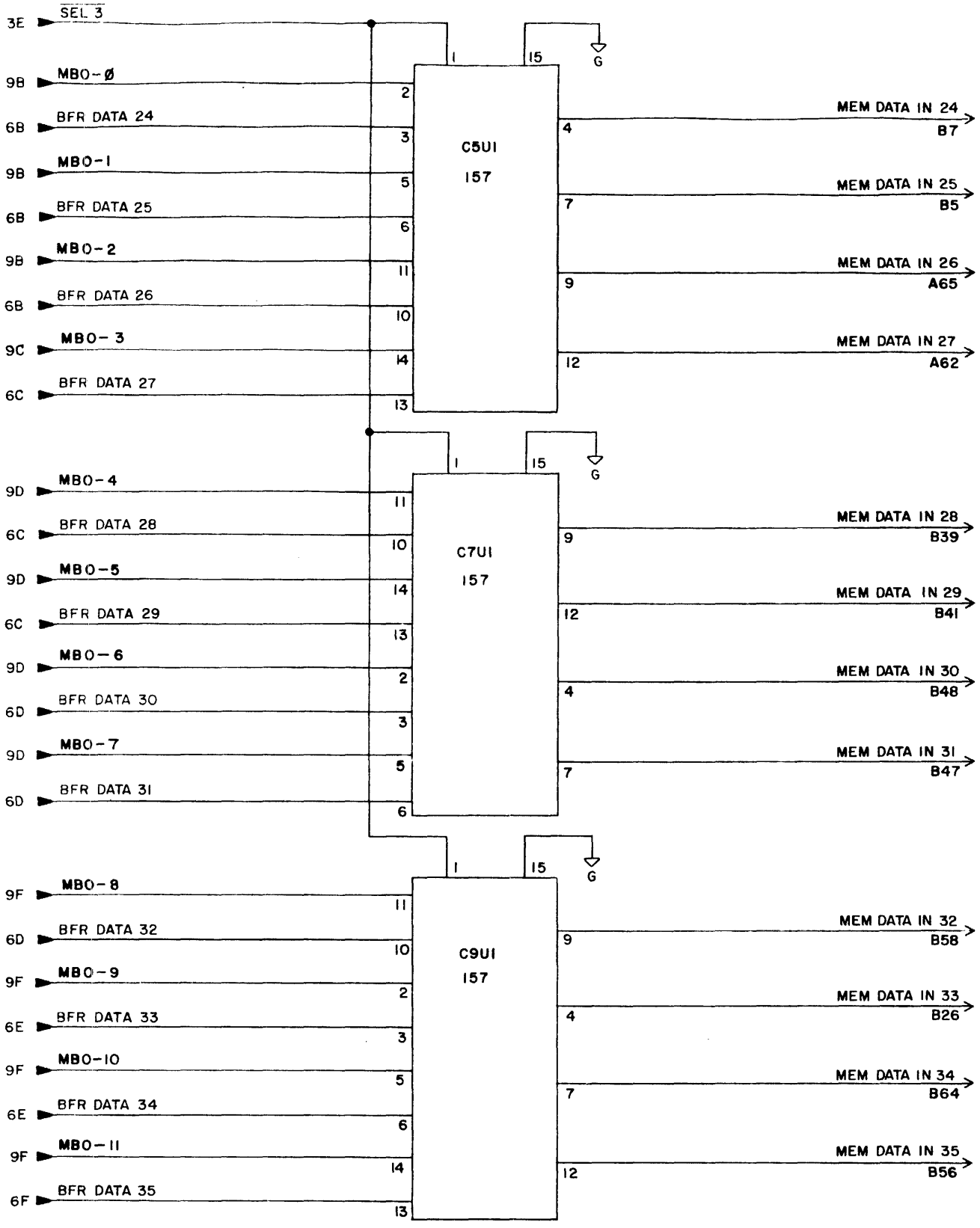

FABRI-TEK INC. MEMORY PRODUCTS DIVISION	TITLE SCHEMATIC, 24K X 12 MULTIPLEXER			
	DWG. NO. C 138-001880	TYPE	VERS.	PAGE 10

EC 000
HIST

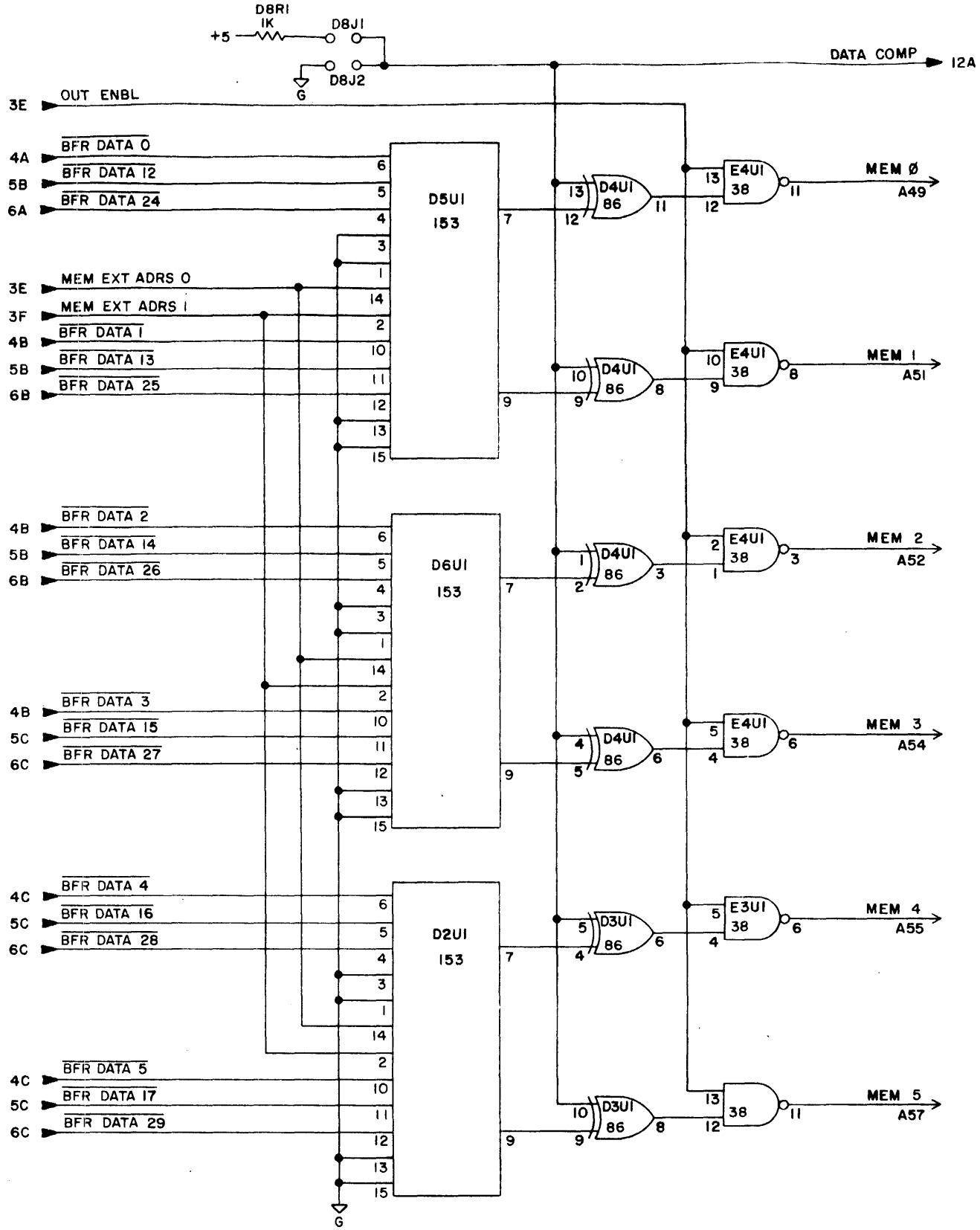

FABRI-TEK INC. MEMORY PRODUCTS DIVISION	TITLE SCHEMATIC, 24K X 12 MULTIPLEXER			
	DWG. NO. C 138-001880	TYPE	VERS.	PAGE 11

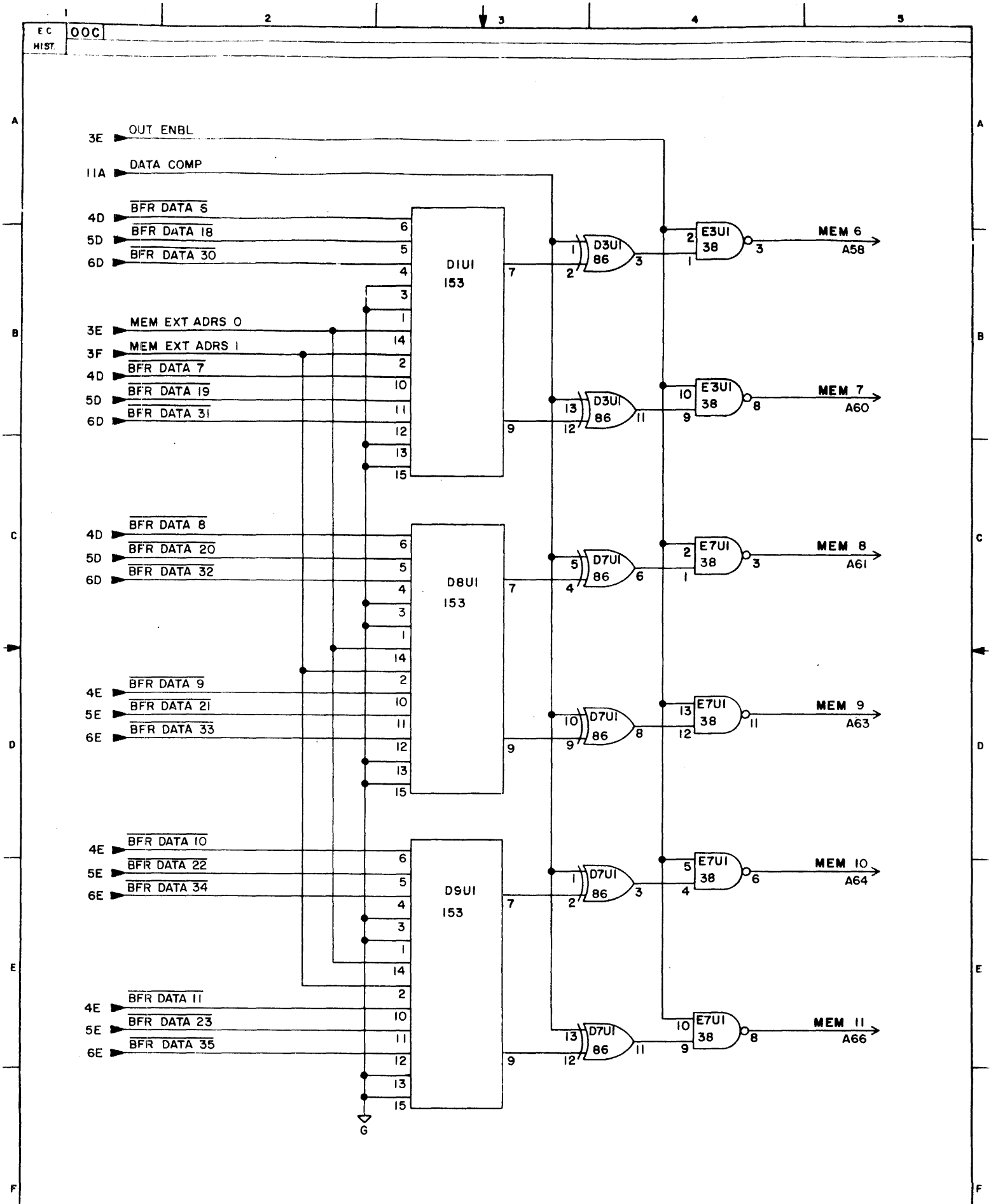

FABRI-TEK INC.
MEMORY PRODUCTS DIVISION

TITLE SCHEMATIC, 24K X 12 MULTIPLEXER

DWG. NO. C 138-001880 | TYPE | VERS. | PAGE 12

APPENDIX A
ALPHABETICAL LISTING OF MEMORY SYSTEM MNEMONICS

AQCE	Advance Q Clock Even
AQCO	Advance Q Clock Odd
CDRT	Clear Data Reg. Timing
CWB1	Clear Write Byte 1
CWB2	Clear Write Byte 2
CYCB	Cycle Begin
CYCC	Cycle Complete
CYCE	Cycle End
CYCI	Cycle Initiate
CYCS	Cycle Start
DEC0	Decode 0 thru
DEC15	Decode 15
DLIN	Delay Line Input
DOE1	Data Out Enable Byte 1
DOE2	Data Out Enable Byte 2
DOT	Data Out Timing
DSVS	Data Save Stop
FCYC	Full Cycle
IFT1	Inhibit Flat Top Byte 1
IFT2	Inhibit Flat Top Byte 2
INHT	Inhibit Timing
IRT1	Inhibit Rise Time Byte 1
IRT2	Inhibit Rise Time Byte 2
LDIF	Load Interface
LDRT	Load Data Reg. Timing
LHIF	Latch Interface
LOW8K	Lower 8K
MA00	Memory Address 00 thru
MA12	Memory Address 12
MCL1	Memory Data Register Clear Byte 1
MCL2	Memory Data Register Clear Byte 2
MDL1	Memory Data Load Byte 1
MDL2	Memory Data Load Byte 2
MDSV	Module Data Save
MODS	Module Select
MS00	Module Select 00 thru
MS07	Module Select 07
NOSW	No Switch Core Current
NO15	No + 15V
PUP1	Pull Up 1
QPL1	Q Pulse 1
QPL2	Q Pulse 2
Q(+ No.)	Q Clock Timing 1, 2, 3, 8, 9, 10, 11, 12
RDSC	Read Source to Switch Core
REFV	Reference Voltage
RRB1	Read Restore Byte 1
RRB2	Read Restore Byte 2
RSET	Reset
RSWT	Read Switch Timing
SAS1	Sense Amp Strobe Enable Byte 1
SAS2	Sense Amp Strobe Enable Byte 2
SCBS	Source Buss
SCCDRT	Split Cycle Clear Data Reg. Timing
SCLDRT	Split Cycle Load Data Reg. Timing
SCYC	Split Cycle
SKBS	Sink Bus
SO	Sense Line Out
STB1	Strobe Byte 1
STB2	Strobe Byte 2
SV1	Sense Voltage 1
SV2	Sense Voltage 2
UP8K	Upper 8K
VSA	Voltage - Sense Amplifier
VTH	Voltage Threshold
WRSC	Write Source to Switch Core
WSST	Write Sink Source Timing
WSWT	Write Switch Timing
XSKW	X Sink Write Timing
XSCRT	X Source Read Timing
XSKR	X Sink Read Timing
YSCR	Y Source Read Timing
YSCW	Y Source Write Timing
YSKR	Y Sink Read Timing
6VCK	6 Volt Clock
9BIT	9 Bit System
18BIT	18 Bit System

COMMENT SHEET

Manual Title: _____

Publication Number: _____ Title Page Revision Letter: _____

From: Name _____

Business Address _____

_____

_____

_____

FABRI-TEK welcomes your comments and evaluation of this publication. Use this postage paid mailer to record errors, to note deficient areas, and to make general comments. Reference specific subjects and page numbers whenever possible.