BOARD HISTORY

PN	EC	STATUS/ECA
1765712	734107	FCS
1765712	734877	MAND (083)

BOARD REPLACEMENT :

ORDER THE SAME PART NUMBER AND EC LEVEL OF THE BOARD BEING REPLACED.
CHECK WITH PAGE AA005 FOR JUMPER/RESISTOR WIRING.

RPQ : SEE SUPPLEMENT PN 4416179
FCS : FIRST CUSTOMER SHIPMENT
MAND : MANDATORY
OPT : OPTIONAL
FEATURE IDENTIFICATION : SEE PAGE AA000

NOTES

[1] CARD REQUIRES JUMPERS PLUGGING,REFER TO PAGE AA010.

[2] BOARD WIRING AFFECTED,SEE BOARD HISTORY.

[3] EMBEDDED VERSION (SHOULD BE USED FOR REPLACEMENT).

[4] ALL CABLES GOING TO 01X-Y1 GATE WILL GO TO THE SAME BOARD LOCATION IN A3 WHEN THE Y1 (AUXILLARY) GATE IS NOT PRESENT.

IBM "THIS DOCUMENT IS THE PROPERTY OF IBM. ITS USE IS AUTHORIZED ONLY FOR RESPONDING TO A REQUEST FOR QUOTATION OR FOR THE PERFORMANCE OF WORK FOR IBM. ALL QUESTIONS MUST BE REFERRED TO THE IBM PURCHASING DEPARTMENT."

MASTER

EC	SEE EC HISTORY	846771					
DATE		11JUN82					

SOC	CARD TYPE	LOGIC	FEATURE	EC STATUS FCS EC 734107	MAND EC 734877 NOTE [2] ECA 083	OPT EC 847125 ECA 126			
B2	2588	PP061		5852588					
B3	2588	PP071		5852588					
C2 [1]	2272	BS011-BS081			8236963	8565080			
D2	2271	BK001-BK051		8236962					
E2	2274	BN011-BN091	7 TRK	8236264					
F2	2276	BR001-BR071		8218426					
G2	9904	BW001-BW091 BW101-BW191		8236949					
H2	2273	BW191		8236942					
K2	9912	BW201 BW242		8236954					
L2	2275	BN301 BN312	7 TRK	8236945					
L4	6282	BL001	W/O 7TRK	5854347					
R2	9159 OR W055	PK081-PK101		8216681					
		PK041 PK051 PK181 PP041 PP051		8218325 NOTE [3]					
S2	9898	PR151-PR161		8218361					
T2	9151 OR W053	PK011-PK035		8216694					
		PS011		8218323 NOTE [3]					
U2	9897 OR W036	PP011-PP031		8215427					
		PR131-PR141		8218336 NOTE [3]					
V3	2589	PS031		5852589					
V4	2589	PS041		5852589					
V5	2589	PS021		5852589					

IBM "THIS DOCUMENT IS THE PROPERTY OF IBM. ITS USE IS AUTHORIZED ONLY FOR RESPONDING TO A REQUEST FOR QUOTATION OR FOR THE PERFORMANCE OF WORK FOR IBM. ALL QUESTIONS MUST BE REFERRED TO THE IBM PURCHASING DEPARTMENT."

SOC	TYPE	PN	FEATURE	GOES TO	
A2	CABLE	5802875		01X-Y1V2	NOTE [4]
A3	CABLE	5802875		01A-A2C2	
A4	CABLE	5802875		01A-A2A2	
A5	CABLE	5802875		01A-A2B2	
B4	CABLE	5802875		01X-Y1V4	NOTE [4]
B5	CABLE	5802875		01X-Y1V5	NOTE [4]
V2	CABLE	5802875		01X-Y1V3	NOTE [4]
Y1	CABLE	5802875		01X-Y1Y6	NOTE [4]
Y2	CABLE	5802875		01X-Y1Z6	NOTE [4]
Y3	CABLE	5802875		01A-B2Y1	
Y4	CABLE	5802875		01A-B2Y3	
Y5	CABLE	5802875		01A-B2Y2	
Y6	CABLE	5802875		01A-A2Y6	
Z1	XOVER	5802876		01A-A2Y1	
Z2	XOVER	5802876		01A-A2Y2	
Z3	XOVER	5802876		01A-A2Y3	
Z4	XOVER	5802876		01A-A2Y4	
Z5	XOVER	5802876		01A-A2Y5	
Z6	CABLE	5802875		01A-B2Y4	

IBM "THIS DOCUMENT IS THE PROPERTY OF IBM. ITS USE IS AUTHORIZED ONLY FOR RESPONDING TO A REQUEST FOR QUOTATION OR FOR THE PERFORMANCE OF WORK FOR IBM. ALL QUESTIONS MUST BE REFERRED TO THE IBM PURCHASING DEPARTMENT."

MASTER

EC	SEE EC	846771					
DATE	HISTORY	11JUN82					

BOARD HISTORY

PN	EC	STATUS/ECA	NOTES
2521394	733843	FCS	
2521394	846627	MAND	NOTE [4]

BOARD REPLACEMENT :

ORDER THE SAME PART NUMBER AND EC LEVEL OF THE BOARD BEING REPLACED.
CHECK WITH PAGE AA005 FOR JUMPER/RESISTOR WIRING.

RPQ : SEE SUPPLEMFNT PN 2741905
FCS : FIRST CUSTOMER SHIPMENT
MAND : MANDATORY
OPT : OPTIONAL
FEATURE IDENTIFICATION : SEE PAGE AA000

NOTES

[1] CARD REQUIRES JUMPER PLUGGING,REFER TO PAGE AA010.

[2] BOARD WIRING AFFECTED, SEE BOARD HISTORY.

[3] EMBEDDED VERSION (SHOULD BE USED FOR REPLACEMENT).

[4] BOARD WIRING EC 846627 IS DONE BY FIELD BM AT EC 847836 (ECA 123).

[5] FOR REPLACEMENT, ORDER CARD PN 8565076.

IBM "THIS DOCUMENT IS THE PROPERTY OF IBM. ITS USE IS AUTHORIZED ONLY FOR RESPONDING TO A REQUEST FOR QUOTATION OR FOR THE PERFORMANCE OF WORK FOR IBM. ALL QUESTIONS MUST BE REFERRED TO THE IBM PURCHASING DEPARTMENT."

SOC	CARD TYPE	LOGIC	FEATURE	EC STATUS					
				FCS	MAND	MAND	MAND	MAND	OPT
				EC 734107	EC 736697	EC 449048	EC 846627	EC 847836	EC 847221
							NOTE [2] [4]		
					ECA 081	ECA 106	ECA 118	ECA 123	ECA 124
C3	6282	NR031		5854347					
D2	1537 OR W050	XC011-XC061	W/O SEL	8216688 8218320 NOTE [3]					8565065
	7864	XC521-XC561	SEL	8218305					8565077
E2 [1]	9909	XC091-XC151	W/O SEL	8218422					
	9910	XC591-XC661	SEL	8236253					
G2 [1]	DE01	QA121		EMPTY			8565073 NOTE [5]	8565076	
H2	2268	QA021-QA111			8237119				
J2	9158	PR071-PR121		8214669					
K2	9896	AA011-AA041		8236449					
L2	9161 OR W035	AA051 AA081-AA101 AA171-AA185		8218356 8218335 NOTE [3]					
M2 [1]	W032	AA061-AA071 AA111-AA131 AA171				8218332			
N2	W034	AA191-AA261				8218334			
P2	E761	FD051	COM 2	5804761					

IBM "THIS DOCUMENT IS THE PROPERTY OF IBM. ITS USE IS AUTHORIZED ONLY FOR RESPONDING TO A REQUEST FOR QUOTATION OR FOR THE PERFORMANCE OF WORK FOR IBM. ALL QUESTIONS MUST BE REFERRED TO THE IBM PURCHASING DEPARTMENT."

SOC	CARD TYPE	LOGIC	FEATURE	EC STATUS					
				FCS	MAND				
				EC 734107	EC 734879				
					ECA 079				
P3	E761	FD051		5804761					
P4	9146 OR W030	AA451- AA461 AB471		8215422 8218330 NOTE [3]					
Q2	9144 OR W029	AA141 AA381- AA411 AB431- AB461		8230745 8230746 NOTE [3]					
R2	1536 OR W045	FC161- FC211 FD041 NR021		8216700 8218315 NOTE [3]					
T2	X362	AA421- AA431 AB141 AB391 AB401- AB421 FD011			8232753				

IBM "THIS DOCUMENT IS THE PROPERTY OF IBM. ITS USE IS AUTHORIZED ONLY FOR RESPONDING TO A REQUEST FOR QUOTATION OR FOR THE PERFORMANCE OF WORK FOR IBM. ALL QUESTIONS MUST BE REFERRED TO THE IBM PURCHASING DEPARTMENT."

MASTER

EC	SEE EC	846771					
DATE	HISTORY	11JUL82					

SOC	TYPE	PN	FEATURE	GOES TO
A2	CABLE	5802875		01A-A1A4
A3	CABLE	5802875	SEL	01A-B3Y1
	CABLE	5802133	W/O SEL	01T-A1A8
A4	CABLE	5802133	W/O SEL	01T-A1B8
A5	CABLE	5802133	COM 2	01T-A1B6
	CABLE	5802875	2 CS	01A-B3Z5
	CABLE	5802875	3 OR 4 CS	01A-A3V5
B2	CABLE	5802875		01A-A1A5
B3	CABLE	5802875	SEL	01A-B3Y2
	CABLE	5802133	COM 2	01T-A1A6
	CABLE	5802875	2 CS	01A-B3Z3
	CABLE	5802875	3 OR 4 CS	01A-A3A4
B4	CABLE	5802875	SEL	01A-B3Y3
	CABLE	5802133	W/O SEL	01T-A1B7
B5	CABLE	5802875	SEL OR 2 CS	01A-B3Z1
	CABLE	5802133	COM 2	01T-A1B5
	CABLE	5802875	3 OR 4 CS	01A-B3Y3
C2	CABLE	5802875		01A-A1A3
C4	CABLE	5802133	W/O SEL	01T-A1A7
C5	CABLE	5802875	SEL OR 2 CS	01A-B3Y5
	CABLE	5802133	COM 2	01T-A1A5
	CABLE	5802875	3 OR 4 CS	01A-B3Y4
U2	CABLE	5802875		01A-B2B2
U5	CABLE	5802875		01A-B2B5
V2	XOVER	5802876		01A-B2A2
V3	XOVER	5802876		01A-B2A3
V4	XOVER	5802876		01A-B2A4
V5	XOVER	5802876		01A-B2A5
Y1	XOVER	5802876		01A-A1Z1
Y2	XOVER	5802876		01A-A1Z2
Y3	XOVER	5802876		01A-A1Z3
Y4	XOVER	5802876		01A-A1Z4
Y5	XOVER	5802876		01A-A1Z5
Y6	CABLE	5802875		01A-A1Y6

IBM "THIS DOCUMENT IS THE PROPERTY OF IBM. ITS USE IS AUTHORIZED ONLY FOR RESPONDING TO A REQUEST FOR QUOTATION OR FOR THE PERFORMANCE OF WORK FOR IBM. ALL QUESTIONS MUST BE REFERRED TO THE IBM PURCHASING DEPARTMENT."

MASTER

EC	SEE EC	846771					
DATE	HISTORY	11JUN82					

BOARD HISTORY

PN	EC	STATUS/ECA	NOTES
2521384	733814	MAND	NOTE [5]
2521384	734872	MAND	NOTE [5]
1384002	847120	RELEASE	
1384002	846627	MAND(123)	NOTE [4]

BOARD REPLACEMENT :

ORDER THE SAME PART NUMBER AND EC LEVEL OF THE BOARD BEING REPLACED, UNLESS OTHERWISE SPECIFED.
CHECK WITH PAGE AA005 FOR JUMPER/RESISTOR WIRING.

RPQ : SEE SUPPLEMENT PN 4416177
FCS : FIRST CUSTOMER SHIPMENT
MAND : MANDATORY
OPT : OPTIONAL
FEATURE IDENTIFICATION : SEE PAGE AA000

NOTES

[1] CARD REQUIRES JUMPERS PLUGGING, REFER TO PAGE AA010.

[2] BOARD WIRING AFFECTED, SEE BOARD HISTORY.

[3] EMBEDDED VERSION (SHOULD BE USED FOR REPLACEMENT).

[4] BOARD WIRING EC 846627 IS DONE BY FIELD BM AT EC 847836 (ECA 123).

[5] FOR REPLACEMENT, ORDER PN 1384002.

[6] FOR REPLACEMENT, ORDER PN 8565076.

IBM "THIS DOCUMENT IS THE PROPERTY OF IBM. ITS USE IS AUTHORIZED ONLY FOR RESPONDING TO A REQUEST FOR QUOTATION OR FOR THE PERFORMANCE OF WORK FOR IBM. ALL QUESTIONS MUST BE REFERRED TO THE IBM PURCHASING DEPARTMENT."

MASTER

EC	SEE EC HISTORY	846771					
DATE		11JUN82					

SOC	CARD TYPE	LOGIC	FEATURE	EC STATUS					
				FCS	MAND	MAND	MAND		
				EC 734107	EC 449048	EC 846627	EC 847636		
						NOTE [2] [4]			
					ECA 106	ECA 118	ECA 123		
C2	W034	AB201-AB271			8218334				
D2 [1]	W032	AB051 AB071 AB111-AB131 AB201 AB381			8218332				
E2	9161 OR W035	AB061 AB081-AB101 AB181 AB191 AB195		8218356 8218335 NOTE [3]					
F2	9896	AB011 AB041		8236449					
G2	9150 OR W052	PR011-PR061		8215421 8218322 NOTE [3]					
H2	2267	QB021-QB111		8236252					
J2 [1]	DE01	QB121		EMPTY		8565073 NOTE [6]	8565076		
K2	E761	FC271 FD051 XM171		5804761					
K3	2290	FC041 XM041	RCS	8218281					
K4	E761	FD051		5804761					
K5	6282	NR011		5854347					

IBM "THIS DOCUMENT IS THE PROPERTY OF IBM. ITS USE IS AUTHORIZED ONLY FOR RESPONDING TO A REQUEST FOR QUOTATION OR FOR THE PERFORMANCE OF WORK FOR IBM. ALL QUESTIONS MUST BE REFERRED TO THE IBM PURCHASING DEPARTMENT."

SOC	CARD TYPE	LOGIC	FEATURE	EC STATUS FCS	MAND	OPT			
				EC 734107	EC 733814	EC 846498			
					NOTE [2]				
					ECA 024	ECA 125			
L2 [1]	1538 OR W046	AB151-AB171 FC141-FC151			8218309 8218316 NOTE [3]				
M2 [1]	2258	AB451 FC071-FC131			8218414				
N2 [1]	9149	XM061-XM111	MIS	8214157					
P2	W031	XM011-XM051	MIS	8218331		8565082			
Q2	W031	FC011-FC051		8218331		8565082			
R2	5840	XM121-XM181	MIS		8218301				
S2	5840	FC221-FC281			8218301				

IBM "THIS DOCUMENT IS THE PROPERTY OF IBM. ITS USE IS AUTHORIZED ONLY FOR RESPONDING TO A REQUEST FOR QUOTATION OR FOR THE PERFORMANCE OF WORK FOR IBM. ALL QUESTIONS MUST BE REFERRED TO THE IBM PURCHASING DEPARTMENT."

3803-2 CABLES LOCATION LIST
BOARD 01A-B2

SOC	TYPE	PN	LOGIC	FEATURE	GOES TO
A2	XOVER	5802876			01A-A2V2
A3	XOVER	5802876			01A-A2V3
A4	XOVER	5802876			01A-A2V4
A5	XOVER	5802876			01A-A2V5
B2	CABLE	5802875			01A-A2U2
B5	CABLE	5802875			01A-A2U5
T2	CABLE	2520992	XM055	MIS	01S-A1B5
T3	CABLE	2520988	FC061		01S-A1A1
T4	CABLE	2520987	FC291		01S-A1B3
T5	CABLE	2520994	XM055	MIS	01S-A1B8
U2	CABLE	2520988	FC291		01S-A1A2
U3	CABLE	2520992	XM055	MIS	01S-A1B6
U4	CABLE	2520994	XM055	MIS	01S-A1B7
U5	CABLE	2520987	FC291		01S-A1B4
V2	CABLE	2520990	FC201		01S-A1B2
V3	CABLE	2520990	FC061		01S-A1B1
V4	CABLE	2520989	FC291		01S-A1A3
V5	CABLE	2520989	FC291		01S-A1A4
Y1	CABLE	5802875			01A-A1Y3
Y2	CABLE	5802875			01A-A1Y5
Y3	CABLE	5802875			01A-A1Y4
Y4	CABLE	5802875			01A-A1Z6
Y5	CABLE	2520993	XM055	MIS	01S-A1A5
Y6	CABLE	2520993	XM055	MIS	01S-A1A6
Z5	CABLE	2520991	XM055	MIS	01S-A1A8
Z6	CABLE	2520991	XM055	MIS	01S-A1A7

IBM "THIS DOCUMENT IS THE PROPERTY OF IBM. ITS USE IS AUTHORIZED ONLY FOR RESPONDING TO A REQUEST FOR QUOTATION OR FOR THE PERFORMANCE OF WORK FOR IBM. ALL QUESTIONS MUST BE REFERRED TO THE IBM PURCHASING DEPARTMENT."

BOARD HISTORY

PN	EC	STATUS/ECA
1765714	734098	FCS
1765714	736699	MAND (082)
1765714	846276	MAND(115)

BOARD REPLACEMENT :

ORDER THE SAME PART NUMBER AND EC LEVEL OF THE BOARD BEING REPLACED.
CHECK WITH PAGE AA005 FOR JUMPER/RESISTOR WIRING.

RPQ : NO SUPPLEMENT
FCS : FIRST CUSTOMER SHIPMENT
MAND : MANDATORY
OPT : OPTIONAL
FEATURE IDENTIFICATION : SEE PAGE AA000

NOTES

[1] BOARD WIRING AFFECTED,SEE BOARD HISTORY.

[2] FOR REPLACEMENT, ORDER PN 8232741.

IBM "THIS DOCUMENT IS THE PROPERTY OF IBM. ITS USE IS AUTHORIZED ONLY FOR RESPONDING TO A REQUEST FOR QUOTATION OR FOR THE PERFORMANCE OF WORK FOR IBM. ALL QUESTIONS MUST BE REFERRED TO THE IBM PURCHASING DEPARTMENT."

SOC	CARD TYPE	LOGIC	FEATURE	EC STATUS					
				FCS	MAND	MAND	MAND	MAND	
				EC 734107	EC 736699	EC 737145	EC 733226	EC 846276	
					NOTE [1]			NOTE [1]	
					ECA 082	ECA 089	ECA 102	ECA 115	
B3	6282	CL001		5854347					
B4	6282	CL011		5854347					
C2	2270	CN211-CN291	NRZ1	8236957					
D2	9913	CN011-CN071	NRZ1				8237131		
F2	9901	CE011-CE111		8218398					
G2	9908	CJ011-CJ081		8218401					
H2	2264	CH111-CH161		8236265					
J2	2277	CH011-CH081						8565059	
K2	9902	CD131-CD391		8236262					
L2	9902	CD211-CD291		8236262					
M2	9902	CD111-CD191		8236262					
N2	DC56	CB411-CB441						8565064	
P2	2278	CC001-CC121		8236961					
Q2	2269	CB111-CB131			8237120				
R2	2251 OR 2251 OR 2251	CA300-CA331		8232741 8218460 NOTE [2] 1767940 NOTE [2]					
S2	2251 OR 2251 OR 2251	CA200-CA231		8232741 8218460 NOTE [2] 1767940 NOTE [2]					
T2	2251 OR 2251 OR 2251	CA100-CA131		8232741 8218460 NOTE [2] 1767940 NOTE [2]					

IBM "THIS DOCUMENT IS THE PROPERTY OF IBM. ITS USE IS AUTHORIZED ONLY FOR RESPONDING TO A REQUEST FOR QUOTATION OR FOR THE PERFORMANCE OF WORK FOR IBM. ALL QUESTIONS MUST BE REFERRED TO THE IBM PURCHASING DEPARTMENT."

MASTER

EC	SEE EC HISTORY	846771					
DATE		11JUN82					

SOC	TYPE	PN	LOGIC	GOES TO
V2	CABLE	5802875		01A-A1A2
V3	CABLE	5802875		01A-A1V2
V4	CABLE	5802875		01A-A1B4
V5	CABLE	5802875		01A-A1B5
Y6	CABLE	5802875		01A-A1Y1
Z6	CABLE	5802875		01A-A1Y2

IBM "THIS DOCUMENT IS THE PROPEPTY OF IBM. ITS USE IS AUTHORIZED ONLY FOR RESPONDING TO A REQUEST FOR QUOTATION OR FOR THE PERFORMANCE OF WORK FOR IBM. ALL QUESTIONS MUST BE REFERRED TO THE IBM PURCHASING DEPARTMENT."

MASTER

EC	SEE EC	846771					
DATE	HISTORY	11JUN82					

YEL WIRE : YELLOW WIRE AWG 30
2520936 : 51 OHM TIE-UP RESISTOR (BLUE)
2520942 : 620 OHM TIE-DOWN RESISTOR (YELLOW)

RPQ : SEE SUPPLEMENT PN 4416176

FEATURE IDENTIFICATION : SEE PAGE AA000.

SECTION A : ALL MACHINES.
:
C : PRIORITY JUMPERS FOR MACHINE WITH EC 733814.
D : SINGLE DENSITY. [3]
E : SINGLE OR DUAL DENSITY. [3]
F : 7 TRK.
G : SELECTION LOGIC (SEL).
H : WITHOUT SELECTION LOGIC.
J : WITHOUT MULTIPLE INTERFACE LOGIC (MIS).
SECTION K : REMOTE CHANNEL SWITCH (RCS).

NOTES

[1] JUMPERS ALREADY INSTALLED ON BOARD PN 1384002.

[2] MAY BE PRINTED OR YELLOW WIRE.

[3] REQUIRED FOR SINGLE DENSITY.

"THIS DOCUMENT IS THE PROPERTY OF IBM. ITS USE IS AUTHORIZED ONLY FOR RESPONDING TO A REQUEST FOR QUOTATION OR FOR THE PERFORMANCE OF WORK FOR IBM. ALL QUESTIONS MUST BE REFERRED TO THE IBM PURCHASING DEPARTMENT."

MASTER

EC	SEE EC HISTORY	846771	846771B					
DATE		11JUN82	15AUG83					

SECTION A : ALL MACHINES

BOARD	LOGIC	FROM	TO	COMPONENT	NOTES
01A-A2		C3 B11	L2 J11	NOTE [2]	DELETE PIN SIDE
		L2 G11	C3 B12		
		C3 B07	Q2 G07		
		T2 B07	V5 D11		
		T2 B07	T1 B11		
		Q2 U07	D2 U12		
		V3 D09	C3 B10		
		V3 D09	P4 G02		
		L2 G09	C3 D12		DELETE PIN SIDE
		C3 D12	F1 D11	NOTE [2]	DELETE CARD SIDE
		D2 U12	C3 D11	YEL WIRE	
		K2 J04	C3 B12		
		U5 D11	V1 A13		
		C3 B11	D2 U13		
		Q2 M07	V1 B11		
		L2 J11	T1 D11		
		L2 G11	H1 B11		
		D2 M09	C2 B04		
		Q2 G07	C1 E13		
		V5 D11	T1 B11		
		T2 M07	V1 B13		
	AB141	C2 B06	T2 G05		
	QA111	H2 U09	H2 B03		
		H2 U09	H2 S10		
		V3 D09	P4 G02		
		P4 G02	C3 B10		
	AA171	L2 G09	F1 D11	YEL WIRE	
		Q2 U07	Q2 U08	2520936	
	AB431	Q2 P04	Q2 P08		
	AB461	Q2 P07	Q2 P08		
	AB461	Q2 J12	Q2 J08		
	AB471	P4 B09	P4 D08		
		K2 M11	K2 P08		
	AA171	M2 D13	M2 D08	2520936	
	AA461	P4 B07	P4 B06	2520942	
01A-A2		T2 B07	T2 B06	2520942	

IBM "THIS DOCUMENT IS THE PROPERTY OF IBM. ITS USE IS AUTHORIZED ONLY FOR RESPONDING TO A REQUEST FOR QUOTATION OR FOR THE PERFORMANCE OF WORK FOR IBM. ALL QUESTIONS MUST BE REFERRED TO THE IBM PURCHASING DEPARTMENT."

EC	SEE EC HISTORY	846771	846771B					
DATE		11JUN82	15AUG83					

MASTER

SECTION A : ALL MACHINES (CONT'D)

BOARD	LOGIC	FROM	TO	COMPONENT	NOTES
01A-B2		Q2 B02	Q2 J10	NOTE [2]	DELETE PIN SIDE NOTE [1]
		N2 U12	Q2 J10	NOTE [2]	DELETE PIN SIDE NOTE [1]
		U5 B10	V5 B10	NOTE [2]	DELETE PIN SIDE NOTE [1]
		T5 B10	R6 C04	NOTE [2]	DELETE CARD SIDE NOTE [1]
	FC261	K5 B03	G2 S09	YEL WIRE	DELETE NOTE [1]
		R6 C04	P2 U07	YEL WIRE	NOTE [1]
		P2 U07	T5 B10		
		V5 B10	Q2 U07		
		S2 G04	S2 D09		
		S2 D09	R2 D09		
		R2 D09	C1 A13		
	FC021	Q2 J06	P2 J06		
		P2 J06	C1 B13		
		Q2 J10	B5 D11		
	QB101	K5 D09	H2 G08		
	QB111	H2 B03	H2 U09		
		H2 U09	H2 S10		
		K5 B11	F2 J04		
		T2 B05	U2 B05		
		U2 B05	V2 B03		
		T2 D04	U2 D04		
		U2 D04	V2 D04		
		T2 B07	U2 B07		
		U2 B07	V2 B07		
		T2 B09	U2 B09		
		U2 B09	V2 B11		
		T2 D12	U2 D12		
		U2 D12	V2 D12		
		T3 B03	U3 B05		
		U3 B03	V3 B03		
		T3 D04	U3 D04		
		U3 D04	V3 D04		
		T3 B07	U3 B07		
		U3 B07	V3 B07		
		T3 B11	U3 B11		
		U3 B11	V3 B11		
		T3 D12	U3 D12		
		U3 D12	V3 D12		
		T4 B03	U4 B03		
		U4 B03	V4 B03		
		T4 D04	U4 D04		
01A-B2		U4 D04	V4 D04	YEL WIRE	NOTE [1]

IBM "THIS DOCUMENT IS THE PROPERTY OF IBM. ITS USE IS AUTHORIZED ONLY FOR RESPONDING TO A REQUEST FOR QUOTATION OR FOR THE PERFORMANCE OF WORK FOR IBM. ALL QUESTIONS MUST BE REFERRED TO THE IBM PURCHASING DEPARTMENT."

EC	SEE EC HISTORY	846771	846771B					
DATE		11JUN82	15AUG83					

MASTER

SECTION A : ALL MACHINES (CONT'D)					
BOARD	LOGIC	FROM	TO	COMPONENT	NOTES
01A-B2		T4 B07	U4 B07	YEL WIRE	NOTE [1]
		U4 B07	V4 B07		
		T4 B11	U4 B09		
		U4 B13	V4 B11		
		T4 D12	U4 D12		
		U4 D12	V4 D12		
		T5 B03	U5 B03		
		U5 B03	V5 B03		
		T5 D04	U5 D04		
		U5 D04	V5 D04		
		T5 B07	U5 B07		
		U5 B07	V5 B07		
		T5 B11	U5 B11		
		U5 B11	V5 B11		
		T5 D12	U5 D12		
		U5 D12	V5 D12		
		N2 U12	Q2 J10		
		U5 B10	Q2 U07		
		K4 B05	K2 D13		
		K2 D13	K2 B05		
		K4 B10	K2 B10		
		S2 P09	K2 B08		
		K2 D04	S2 P11		
		K2 B07	R2 P09		
		K2 B03	R2 P11		
		C1 D13	G2 S09	YEL WIRE	NOTE [1]
	AB181	E2 M11	E2 P08	2520936	
	FC011	Q2 B04	Q2 D08	2520936	
01A-B2	XM011	P2 B04	P2 D08	2520936	

IBM "THIS DOCUMENT IS THE PROPERTY OF IBM. ITS USE IS AUTHORIZED ONLY FOR RESPONDING TO A REQUEST FOR QUOTATION OR FOR THE PERFORMANCE OF WORK FOR IBM. ALL QUESTIONS MUST BE REFERRED TO THE IBM PURCHASING DEPARTMENT."

EC	SEE EC HISTORY	846771	846771B					
DATE		11JIN82	15AUG83					

MASTER

SECTION C : PRIORITY JUMPERS					
BOARD	LOGIC	FROM	TO	COMPONENT	NOTES
01A-B2	FC281	V4 D09	S2 P09	YEL WIRE	ADD FOR HIGH PRIORITY CHANNEL A NOTE [1]
		T4 B08	V4 B08		
		S2 P11	T4 D09		
		V4 D09	T4 D09		ADD FOR LOW PRIORITY CHANNEL A
		T4 B08	S2 P09		
	FC281	S2 P11	V4 B08		
	XM181	U6 C02	R2 P09		ADD FOR HIGH PRIORITY CHANNEL B (MIS) NOTE [1]
		U4 B08	U6 B04		
		R2 P11	U4 D09		
		U6 C02	U4 D09		ADD FOR LOW PRIORITY CHANNEL B (MIS)
		U4 B08	R2 P09		
01A-B2	XM181	R2 P11	U6 B04	YEL WIRE	

SECTION D : SINGLE DENSITY FEATURE ONLY					
BOARD	LOGIC	FROM	TO	COMPONENT	NOTES
01X-Y1	CN251	C2 U02	C2 S06	2520942	

IBM "THIS DOCUMENT IS THE PROPERTY OF IBM. ITS USE IS AUTHORIZED ONLY FOR RESPONDING TO A REQUEST FOR QUOTATION OR FOR THE PERFORMANCE OF WORK FOR IBM. ALL QUESTIONS MUST BE REFERRED TO THE IBM PURCHASING DEPARTMENT."

MASTER

EC	SEE EC HISTORY	846771	846771B					
DATE		11JUN82	15AUG83					

SECTION E : SINGLE OR DUAL DENSITY FEATURE					
BOARD	LOGIC	FROM	TO	COMPONENT	NOTES
01A-A1	BR101	L2 G07	L2 G11	YEL WIRE	
		E2 D09	E2 B09		
		E2 D13	E2 B13		
		L2 G13	L2 G12		
		E2 D02	E2 B02		
		E2 D10	E2 B10		
		E2 J04	E2 G04		
		E2 J02	E2 G02		
		F2 J02	L2 B04		
		E2 D04	E2 B04		
		E2 D12	E2 B12		
		E2 J05	E2 G05		
	BR101	E2 J10	E2 G10		
	BR111	E2 P04	E2 M09		
		E2 U02	E2 S02		
		E2 U09	E2 S09		
		E2 P02	E2 M02		
		E2 P10	E2 M10		
		E2 U03	E2 S03		
		E2 U11	E2 S11		
		E2 J07	E2 G07		
		E2 P11	E2 M11		
		E2 U05	E2 S05		
	BR111	E2 U12	E2 S12	YEL WIRE	
01A-A1	BW241	K2 M13	K2 M06	2520942	
01A-A2	AA131	M2 P03	M2 M06	2520942	

SECTION F : 7 TRK FEATURE ONLY					
BOARD	LOGIC	FROM	TO	COMPONENT	NOTES
01A-A2	AA131	M2 P03	M2 P08	2520936	

IBM "THIS DOCUMENT IS THE PROPERTY OF IBM. ITS USE IS AUTHORIZED ONLY FOR RESPONDING TO A REQUEST FOR QUOTATION OR FOR THE PERFORMANCE OF WORK FOR IBM. ALL QUESTIONS MUST BE REFERRED TO THE IBM PURCHASING DEPARTMENT."

SECTION G : SELECTION LOGIC					
BOARD	LOGIC	FROM	TO	COMPONENT	NOTES
01A-A2		C4 B02	A4 B12	YEL WIRE	
↑		C4 D03	A4 D09	↑	
		C4 B04	A4 D07		
		C4 D05	A4 D11		
		C4 B06	A5 D07		
		C4 D07	A5 D09		
		C4 B08	A5 B12		
		C4 D09	A5 D11		
		B3 D09	A5 B10		
		E2 U09	A3 B02		
		E2 S03	B3 B02	↓	
	XC601	A4 B10	A3 D09		
01A-A2		E2 P05	C3 D02	YEL WIRE	

SECTION H : WITHOUT SELECTION LOGIC					
BOARD	LOGIC	FROM	TO	COMPONENT	NOTES
01A-A2		A3 B03	A3 B02	YEL WIRE	
01A-A2		B3 B03	B3 B02	YEL WIRE	
01A-A2	FD051	A3 D09	P3 B03	YEL WIRE	

SECTION J : WITHOUT MIS					
BOARD	LOGIC	FROM	TO	COMPONENT	NOTES
01A-B2	FC031	Q2 U10	Q2 S02	YEL WIRE	
↑	XM041	P2 P07	P2 P08	2520936	
	FC051	Q2 P13	Q2 M06	2520942	
	AB161	L2 S09	L2 S06	2520942	
01A-B2	XM101	N2 J11	N2 J08	2520936	

IBM "THIS DOCUMENT IS THE PROPERTY OF IBM. ITS USE IS AUTHORIZED ONLY FOR RESPONDING TO A REQUEST FOR QUOTATION OR FOR THE PERFORMANCE OF WORK FOR IBM. ALL QUESTIONS MUST BE REFERRED TO THE IBM PURCHASING DEPARTMENT."

EC	SEE EC HISTORY	846771	846771B					
DATE		11JUN82	15AUG83					

MASTER

SECTION K : RCS (REMOTE CHANNEL SWITCH)					
BOARD	LOGIC	FROM	TO	COMPONENT	NOTES
01A-B2	PS041	A5 B06	P2 G12	NOTE [2]	DELETE PIN SIDE
		A5 B04	Q2 G12	NOTE [2]	DELETE CARD OR PIN SIDE
	PS041	A5 B06	K3 B08	YEL WIRE	
		K3 B08	K3 D09		
		A5 B04	K3 D07		
		K3 D07	K3 B13		
		Q2 G13	K3 B07		
	PS041	P2 G13	K3 D12		
	FC041	K3 B12	K3 D13		
	FC041	K3 B11	Q2 G12		
	XM041	K3 D10	K3 D05		
	XM041	K3 D04	P2 G12	YEL WIRE	
	FC041	K3 B12	K3 B06	2520942	
	FC041	K3 B11	K3 B06	2520942	
	XM041	K3 D05	M3 B06	2520942	
01A-B2	XM041	K3 D04	M3 B06	2520942	

IBM "THIS DOCUMENT IS THE PROPERTY OF IBM. ITS USE IS AUTHORIZED ONLY FOR RESPONDING TO A REQUEST FOR QUOTATION OR FOR THE PERFORMANCE OF WORK FOR IBM. ALL QUESTIONS MUST BE REFERRED TO THE IBM PURCHASING DEPARTMENT."

MASTER

EC	SEE EC HISTORY	846771	846771B					
DATE		11JUN82	15AUG83					

C

1846376

PART NO	LOGIC PG NO
1846376	AA006

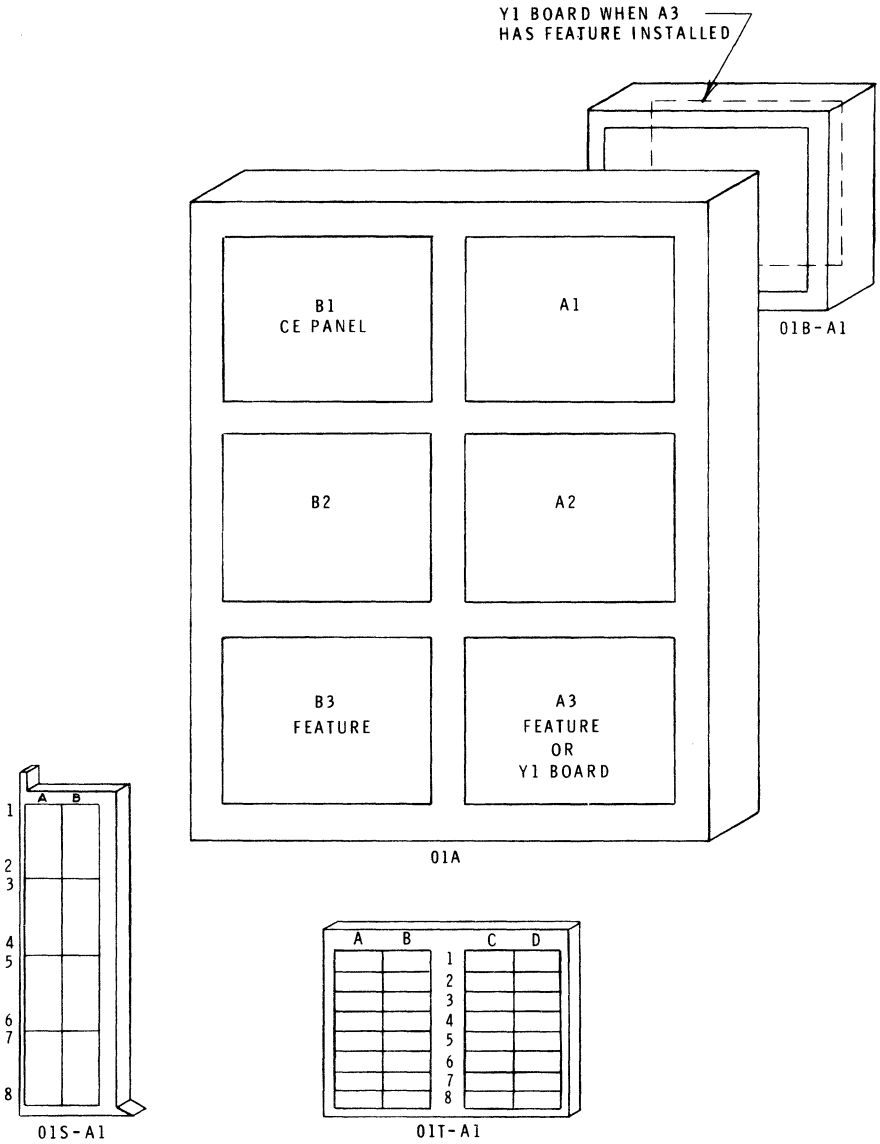

VIEW-LOOKING INTO REAR OF MACHINE

"THIS DOCUMENT IS THE PROPERTY OF IBM, ITS USE IS AUTHORIZED ONLY FOR RESPONDING TO A REQUEST FOR QUOTATION OR FOR THE PERFORMANCE OF WORK FOR IBM. ALL QUESTIONS MUST BE REFERRED TO THE IBM PURCHASING DEPARTMENT.

IBM					DATE	CHANGE NO		DATE	CHANGE NO
NAME	GATE LOCATION DIAGRAM				17DEC72	734081			
	(AA006)								
DESIGN	GWV	27SEP71	SHT OF						
DETAIL	VLG	17DEC72							
CHECK	DS		CLASSIFICATION	MUST CONFORM TO ENG SPEC		DEVELOPMENT NO		LOGIC PG NO	
APPRO			N-JW 7SEP73					AA006	

1846376

C

620 0134 1 MRO# 780522204 VERTICAL ELECTRICAL FORMAT ASTROCLOTH N6507 14628

BOARD HISTORY

PN	EC	STATUS/ECA
2521396	733760	FCS

RPQ : NO SUPPLEMENT
FCS : FIRST CUSTOMER SHIPMENT
FEATURE IDENTIFICATION : SEE PAGE AA000

NOTES

[1] CARD REQUIRES JUMPERS PLUGGING, REFER TO PAGE AA010.

[2] THE CHARACTER IN PARENTHESES () IS THE APPROPRIATE CHART ON LOGIC PAGE XC 701.

[3] EC 733816 FOR MOD 1.
EC 734107(FCS) FOR MOD 2.

IBM "THIS DOCUMENT IS THE PROPERTY OF IBM. ITS USE IS AUTHORIZED ONLY FOR RESPONDING TO A REQUEST FOR QUOTATION OR FOR THE PERFORMANCE OF WORK FOR IBM. ALL QUESTIONS MUST BE REFERRED TO THE IBM PURCHASING DEPARTMENT."

MASTER

EC	SEE EC HISTORY	846771					
DATE		11JUN82					

SOC	CARD TYPE	LOGIC XC701 NOTE [2]	FEATURE MFI	EC STATUS FCS EC NOTE [3]				
L2 [1]	7866	(A)	3 OR 4CS	8215379				
M2 [1]	7868	(A)	3 OR 4CS	8215381				
N2 [1]	7868	(A)	3 OR 4CS	8215381				
P2 [1]	7868	(A)	4CS	8215381				
Q2 [1]	6319	(A)	3 OR 4CS	8215378				
R2 [1]	7867	(A)	3 OR 4CS	8215380				
S2 [1]	7867	(A)	3 OR 4CS	8215380				
T2 [1]	7867	(A)	4CS	8215380				

IBM "THIS DOCUMENT IS THE PROPERTY OF IBM. ITS USE IS AUTHORIZED ONLY FOR RESPONDING TO A REQUEST FOR QUOTATION OR FOR THE PERFORMANCE OF WORK FOR IBM. ALL QUESTIONS MUST BE REFERRED TO THE IBM PURCHASING DEPARTMENT."

SOC	TYPE	PN	FEATURE	LOGIC XC701 NOTE [2]	GOES TO
A4	CABLE		3 OR 4CS	(D)	01A-A2B3
A5	CABLE		3 OR 4CS	(D)	01T-A1A4
B4	CABLE		3 OR 4CS	(D)	01T-A1A6
B5	CABLE		4CS	(D)	01T-A1A2
U2	CABLE		3 OR 4CS	(E)	OPERATOR PANEL
U3	CABLE		3 OR 4CS	(E)	OPERATOR PANEL
U4	CABLE		4CS	(D)	01T-A1B2
U5	CABLE		3 OR 4CS	(D)	01T-A1B6
V2	CABLE		3 OR 4CS	(H)	01A-B3Z1
V3	CABLE		3 OR 4CS	(H)	01A-B3Y1
V4	CABLE		3 OR 4CS	(D)	01T-A1B4
V5	CABLE		3 OR 4CS	(D)	01A-A2A5
Y4	CABLE		3 OR 4CS	(L)	01A-B3Y6
Y5	CABLE		3 OR 4CS	(L)	01A-B3Z6

IBM "THIS DOCUMENT IS THE PROPERTY OF IBM. ITS USE IS AUTHORIZED ONLY FOR RESPONDING TO A REQUEST FOR QUOTATION OR FOR THE PERFORMANCE OF WORK FOR IBM. ALL QUESTIONS MUST BE REFERRED TO THE IBM PURCHASING DEPARTMENT."

BOARD HISTORY

SEL OR 2 CS		
PN	EC	STATUS/ECA
2521388	732385	FCS

3 OR 4 CS		
PN	EC	STATUS/EC
2521398	732383	FCS

RPQ : NO SUPPLEMENT
FCS : FIRST CUSTOMER SHIPMENT
FEATURE IDENTIFICATION : SEE PAGE AA000

NOTES

[1] CARD REQUIRED JUMPERS PLUGGING, REFER TO PAGE AA010.

[2] LOGIC PAGE XC700 FOR SEL OR 2CS. LOGIC PAGE XC701 FOR 3 OR 4 CS. THE CHARACTER IN PARENTHESES () IS THE APPROPRIATE CHART ON THE LOGIC PAGE.

[3] EC 733816 FOR MOD 1.
EC 734107 (FCS) FOR MOD 2.

IBM "THIS DOCUMENT IS THE PROPERTY OF IBM. ITS USE IS AUTHORIZED ONLY FOR RESPONDING TO A REQUEST FOR QUOTATION OR FOR THE PERFORMANCE OF WORK FOR IBM. ALL QUESTIONS MUST BE REFERRED TO THE IBM PURCHASING DEPARTMENT."

MASTER

EC	SEE EC	846771					
DATE	HISTORY	11JUN82					

SOC	CARD TYPE	LOGIC NOTE [2]	FEATURE	EC STATUS: FCS / EC NOTE [3]				
C2	5897	(J)	3 OR 4CS	5855743				
D2	5897	(M)	SEL	5855743				
	5897	(J)	2CS	5855743				
	5897	(J)	3 OR 4CS	5855743				
E2	5897	(J)	2CS	5855743				
	5897	(J)	3 OR 4CS	5855743				
F2	5897	(M)	SEL	5855743				
	5897	(J)	2CS	5855743				
	5897	(J)	4CS	5855743				
G2	5897	(J)	2CS	5855743				
	5897	(J)	3 OR 4CS	5855743				
H2	6319	(A)	2CS [1]	8215378				
	5897	(J)	3 OR 4CS	5855743				
J2	7867	(A)	2CS [1]	8215380				
	5897	(J)	3 OR 4CS	5855743				
K2	7866	(A)	2CS [1]	8215379				
	5897	(J)	4CS	5855743				
L2	7868	(A)	2CS [1]	8215381				
	5896	(J)	4CS	5855742				
M2	5896	(J)	3 OR 4CS	5855742				
N2	5896	(J)	3 OR 4CS	5855742				
P2	5896	(J)	2CS	5855742				
		(J)	3 OR 4CS	5855742				
Q2	5896	(M)	SEL	5855742				
	5896	(J)	2CS	5855742				
	5896	(J)	4CS	5855742				
R2	5896	(J)	2CS	5855742				
	5896	(J)	3 OR 4CS	5855742				
S2	5896	(M)	SEL	5855742				
	5896	(J)	2CS	5855742				
	5896	(J)	3 OR 4CS	5855742				
T2	5896	(J)	3 OR 4CS	5855742				

IBM "THIS DOCUMENT IS THE PROPERTY OF IBM. ITS USE IS AUTHORIZED ONLY FOR RESPONDING TO A REQUEST FOR QUOTATION OR FOR THE PERFORMANCE OF WORK FOR IBM. ALL QUESTIONS MUST BE REFERRED TO THE IBM PURCHASING DEPARTMENT."

SOC	TYPE	PN	FEATURE	LOGIC NOTE [2]	GOES TO
A2	CABLE		SEL	(P)	01T-A1D8
			2CS	(H)	01T-A1D8
			3 OR 4CS	(H,K)	01T-A1D8
A3	CABLE		SEL	(P)	01T-A1D7
			2CS	(H)	01T-A1D7
			3 OR 4CS	(H,K)	01T-A1D7
A4	CABLE		SEL	(P)	01T-A1D6
			2CS	(H)	01T-A1D6
			3 OR 4CS	(H,K)	01T-A1D6
A5	CABLE		SEL	(P)	01T-A1D5
			2CS	(H)	01T-A1D5
			3 OR 4CS	(H,K)	01T-A1D5
B2	CABLE		SEL	P	01T-A1D4
			2CS	H	01T-A1D4
			3 OR 4CS	(H,K)	01T-A1D4
B3	CABLE		SEL	(P)	01T-A1D3
			2CS	(H)	01T-A1D3
			3 OR 4CS	(H,K)	01T-A1D3
B4	CABLE		SEL	(P)	01T-A1D2
			2CS	(H)	01T-A1D2
			3 OR 4CS	(H,K)	01T-A1D2
B5	CABLE		SEL	(P)	01T-A1D1
			2CS	(H)	01T-A1D1
			3 OR 4CS	(H,K)	01T-A1D1
C3	CABLE	2521342	2CS	(E)	OPERATOR PANEL
U2	CABLE		SEL	(P)	01T-A1C4
			2CS	(K)	01T-A1C4
			3 OR 4CS	(K)	01T-A1C4
U3	CABLE		SEL	(P)	01T-A1C3
			2CS	(K)	01T-A1C3
			3 OR 4CS	(K)	01T-A1C3
U4	CABLE		SEL	(P)	01T-A1C2
			2CS	(K)	01T-A1C2
			3 OR 4CS	(K)	01T-A1C2
U5	CABLE		SEL	(P)	01T-A1C1
			2CS	(K)	01T-A1C1
			3 OR 4CS	(K)	01T-A1C1

IBM "THIS DOCUMENT IS THE PROPERTY OF IBM. ITS USE IS AUTHORIZED ONLY FOR RESPONDING TO A REQUEST FOR QUOTATION OR FOR THE PERFORMANCE OF WORK FOR IBM. ALL QUESTIONS MUST BE REFERRED TO THE IBM PURCHASING DEPARTMENT."

SOC	TYPE	PN	FEATURE	LOGIC NOTE [2]	GOES TO
V2	CABLE		SEL	(P)	01T-A1C8
			2CS	(K)	01T-A1C8
			3 OR 4CS	(K)	01T-A1C8
V3	CABLE		SEL	(P)	01T-A1C7
			2CS	(K)	01T-A1C7
			3 OR 4CS	(K)	01T-A1C7
V4	CABLE		SEL	(P)	01T-A1C6
			2CS	(K)	01T-A1C6
			3 OR 4CS	(K)	01T-A1C6
V5	CABLE		SEL	(P)	01T-A1C5
			2CS	(K)	01T-A1C5
			3 OR 4CS	(K)	01T-A1C5
Y1	CABLE		SEL	(Q)	01A-A2A3
			3 OR 4CS		01A-A3V3
Y2	CABLE		SEL	(Q)	01A-A2B3
			3 OR 4CS	(K)	01T-A1B5
Y3	CABLE		SEL	(N)	01A-A2B4
			3 OR 4CS	(K)	01A-A2B5
Y4	CABLE		3 OR 4CS	(K)	01A-A2C5
Y5	CABLE		SEL	(P)	01A-A2C5
			2CS	(K)	01A-A2C5
			3 OR 4CS	(K)	01T-A1A5
Y6	CABLE		2CS	(K)	01T-A1A5
			3 OR 4CS	(L)	01A-A3Y4
Z1	CABLE		SEL	(P)	01A-A2B5
			2CS	(K)	01A-A2B5
			3 OR 4CS		01A-A3V2
Z2	CABLE		2CS	(K)	01T-A1B5
			4CS		01T-A1B1
Z3	CABLE		2CS	(D)	01A-A2B3
			3 OR 4CS		01T-A1B3
Z4	CABLE		2CS	(D)	01T-A1A6
			3 OR 4CS	(K)	01T-A1A3
Z5	CABLE		2CS	(D)	01A-A2A5
			4CS	(K)	01T-A1A1
Z6	CABLE		2CS	(D)	01T-A1B6
			3 OR 4CS	(L)	01A-A3Y5

IBM "THIS DOCUMENT IS THE PROPERTY OF IBM. ITS USE IS AUTHORIZED ONLY FOR RESPONDING TO A REQUEST FOR QUOTATION OR FOR THE PERFORMANCE OF WORK FOR IBM. ALL QUESTIONS MUST BE REFERRED TO THE IBM PURCHASING DEPARTMENT."

"THIS DOCUMENT IS THE PROPERTY OF IBM. ITS USE IS AUTHORIZED ONLY FOR RESPONDING TO A REQUEST FOR QUOTATION OR FOR THE PERFORMANCE OF WORK FOR IBM. ALL QUESTIONS MUST BE REFERRED TO THE IBM PURCHASING DEPARTMENT."

MASTER

PLUGGING CHART AA010
3803.002

1 3803 ADDRESS (CHANNEL "A"):

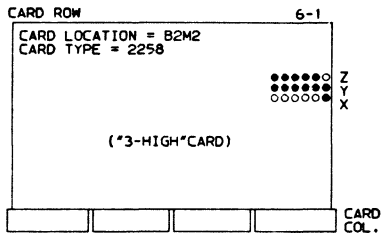

EXAMPLE:

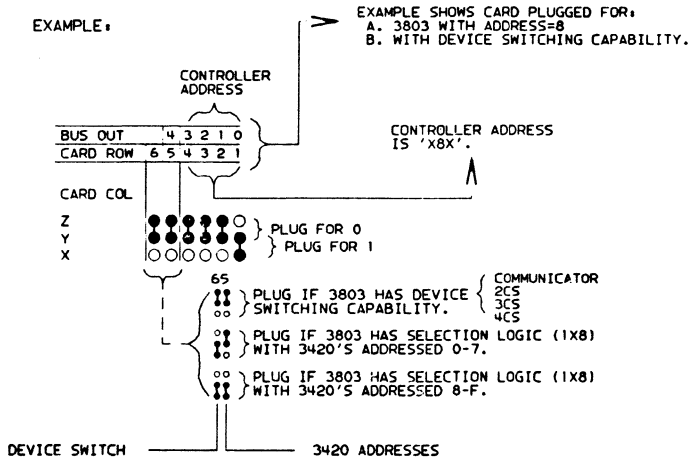

2 DISCONNECT-IN HANDLING: S/360 OR S/370

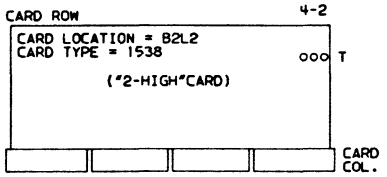

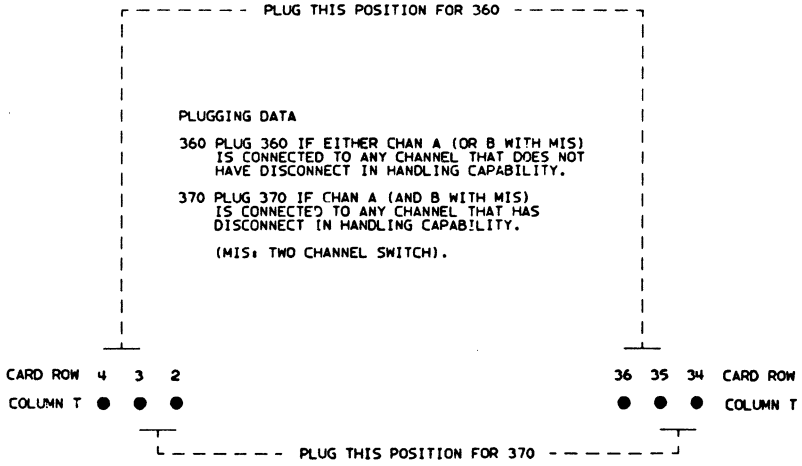

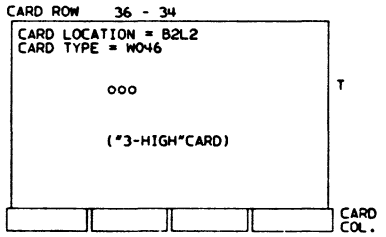

EC	SEE EC	846771			
DATE	HISTORY	11JUN82			

PN 1846375

"THIS DOCUMENT IS THE PROPERTY OF IBM. ITS USE IS AUTHORIZED ONLY FOR RESPONDING TO A REQUEST FOR QUOTATION OR FOR THE PERFORMANCE OF WORK FOR IBM. ALL QUESTIONS MUST BE REFERRED TO THE IBM PURCHASING DEPARTMENT."

3 SELECT OUT PRIORITY:

TAPE CONTROLS ARE FACTORY-WIRED TO RESPOND TO A SELECT OUT SIGNAL (HIGH PRIORITY). IF ("LOW PRIORITY") IS DESIRED, CHANGE THE B2 PANEL WIRING TO CONVERT A 3803 TAPE CONTROL TO RESPOND TO A SELECT IN SIGNAL. REFER TO WIRING CHARTS AA005.

4 FEATURES (WHEN APPLICABLE TO YOUR MACHINE):

A. TWO CHANNEL SWITCH FEATURE: (MIS)

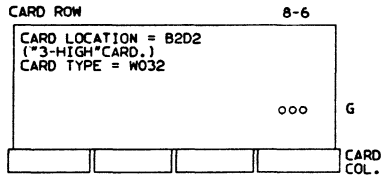

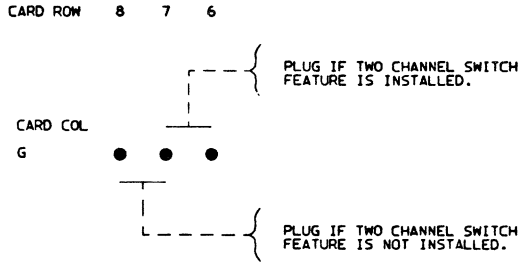

B. TWO-CHANNEL SWITCH FEATURE (3803 ADDRESS CHANNEL "B"):

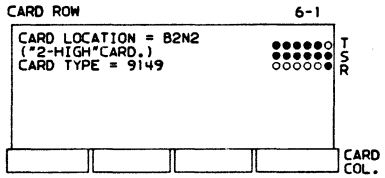

EXAMPLE:

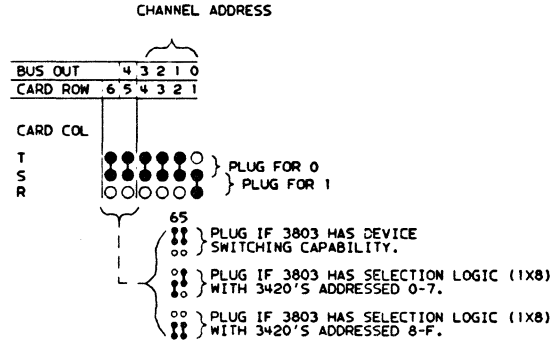

EXAMPLE SHOWS CARD PLUGGED FOR:
A. 3803 WITH ADDRESS = 8.
B. WITH DEVICE SWITCHING CAPABILITY.

C. NRZI FEATURE:

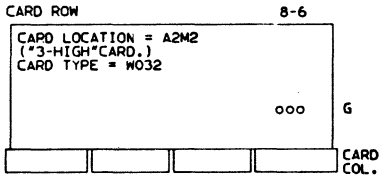

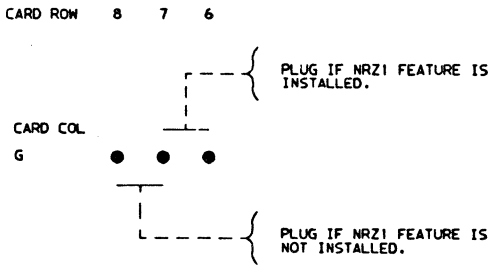

EC	SEE EC	846771			
DATE	HISTORY	11JUN82			

PN 1846375

IBM "THIS DOCUMENT IS THE PROPERTY OF IBM. ITS USE IS AUTHORIZED ONLY FOR RESPONDING TO A REQUEST FOR QUOTATION OR FOR THE PERFORMANCE OF WORK FOR IBM. ALL QUESTIONS MUST BE REFERRED TO THE IBM PURCHASING DEPARTMENT."

MASTER

PLUGGING CHART AA010
3803.002

5 PRIMARY/SECONDARY TAPE UNIT INTERFACE CONTROL:

A. WITH DEVICE SWITCHING CAPABILITY.

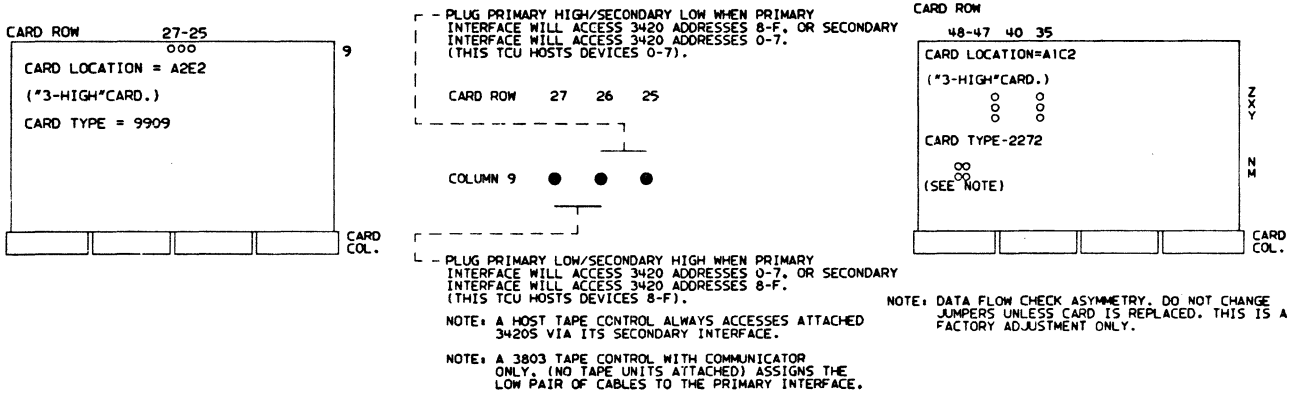

6 DATA IN HANDLING: S/360 OR S/370.

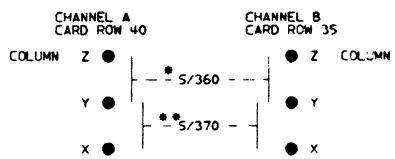

PLUG EACH CHANNEL INDEPENDENTLY AS FOLLOWS:•

•360 PLUG 360 IF THE ATTACHED CHANNEL DOES NOT HAVE DATA IN/DATA OUT CAPABILITY.

••370 PLUG 370 IF THE ATTACHED CHANNEL HAS DATA IN/DATA OUT CAPABILITY.

IF ATTACHED TO A 2880 CHANNEL, BUS OUT CHECKS MAY OCCUR IF CHANNEL TIMINGS ARE NOT OPTIMIZED. THE 2880 MUST BE AT EC 718040 LEVEL OR HIGHER.

•W/O MIS-CHANNEL B MAY BE PLUGGED TO 360 OR 370 SINCE IT IS NOT USED.

B. WITH SELECTION LOGIC (1X8).

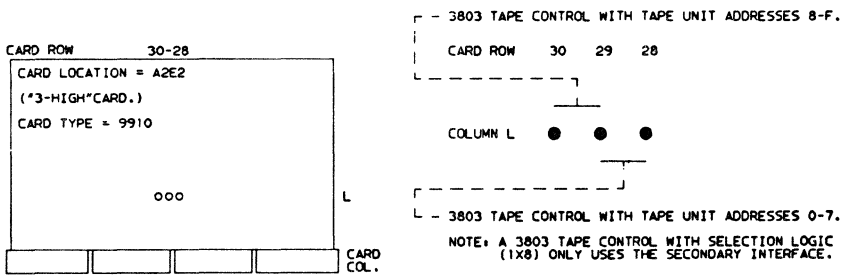

EC	SEE EC	846771			
DATE	HISTORY	11JUN82			

PN 1846375

"THIS DOCUMENT IS THE PROPERTY OF IBM. ITS USE IS AUTHORIZED ONLY FOR RESPONDING TO A REQUEST FOR QUOTATION OR FOR THE PERFORMANCE OF WORK FOR IBM. ALL QUESTIONS MUST BE REFERRED TO THE IBM PURCHASING DEPARTMENT."

7 TAPE SWITCHING FEATURE ADDRESS CONTROL:

1. FOR INSTALLATIONS WITH LESS THAN A FULL COMPLEMENT OF 3420 TAPE UNITS (FOR EXAMPLE, 2X12), PLUG ALL CARDS AS IF THE NON-EXISTENT TAPE UNITS HAD ADDRESSES ASSIGNED TO THEM.

JUMPER CABLE LOCATIONS FOR SWITCH CARDS:

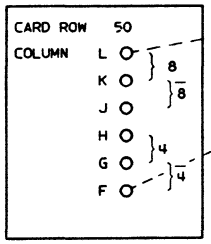

2. AS EACH SWITCH CARD IS PULLED, REFER TO STEP 8 AND VERIFY THAT DEVICE SELECTION PRIORITY ASSIGNMENTS ARE CORRECT.

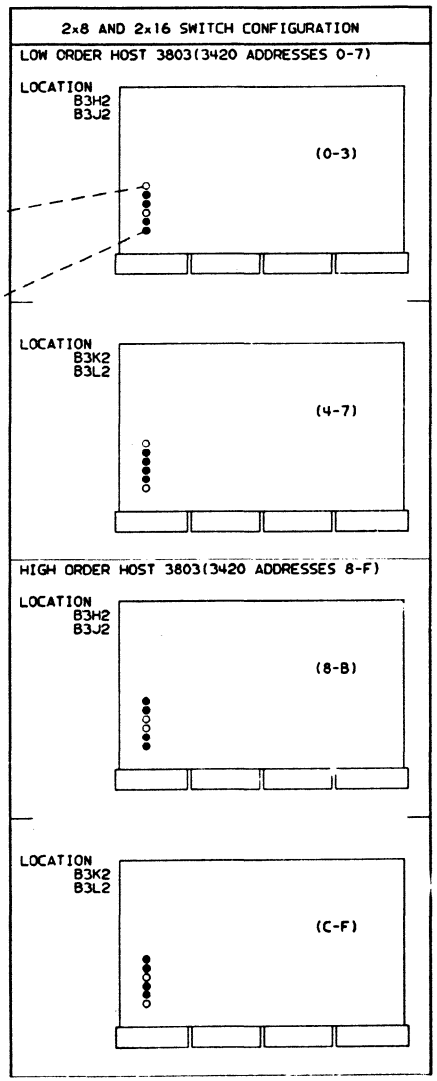

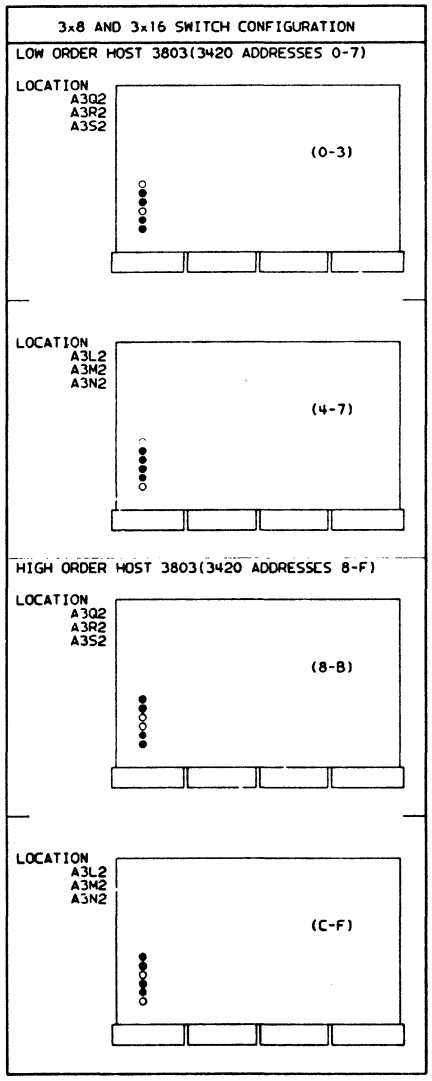

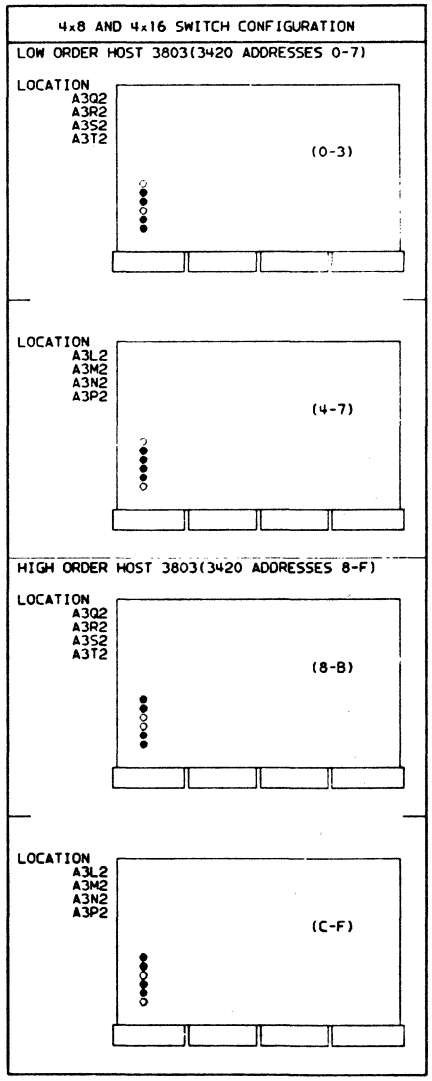

EC	SEE EC	846771			
DATE	HISTORY	11JUN82			

PN 1846375

IBM "THIS DOCUMENT IS THE PROPERTY OF IBM. ITS USE IS AUTHORIZED ONLY FOR RESPONDING TO A REQUEST FOR QUOTATION OR FOR THE PERFORMANCE OF WORK FOR IBM. ALL QUESTIONS MUST BE REFERRED TO THE IBM PURCHASING DEPARTMENT."

MASTER

PLUGGING CHART AA010
3803.002

8 DEVICE SELECTION PRIORITY ASSIGNMENTS:

PLUGGING RULES:

1. A PRIORITY MUST BE ASSIGNED TO EACH SET OF CARDS.
2. NO DUPLICATION OF PRIORITY SHOULD EXIST BETWEEN SETS OF CARDS IN ONE 3803 TAPE CONTROL.
3. ALL CARDS MUST HAVE T23-U23 CONNECTED BY A JUMPER WIRE.
4. FACTORY PLUGGING FOR THESE CARDS SHOULD BE AS SHOWN, AND SHOULD NOT HAVE TO BE CHANGED FOR ANY INSTALLATION.
5. THIS PLUGGING ESTABLISHES PRIORITY; IF TWO 3803S TRY TO ACCESS THE SAME 3420 TAPE UNIT SIMULTANEOUSLY, THE 3803 WITH THE LEAST NUMBER OF JUMPERS WILL TAKE CONTROL.

CONNECT A JUMPER CABLE TO LOCATIONS FOR SWITCH CARDS AS SHOWN BELOW:

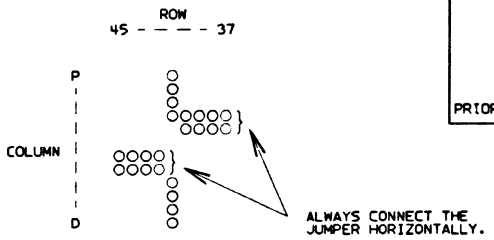

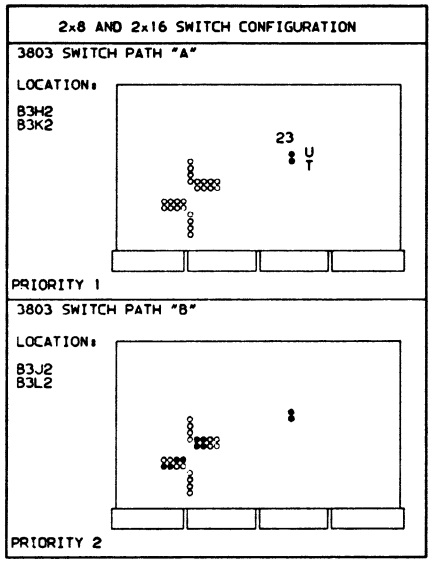

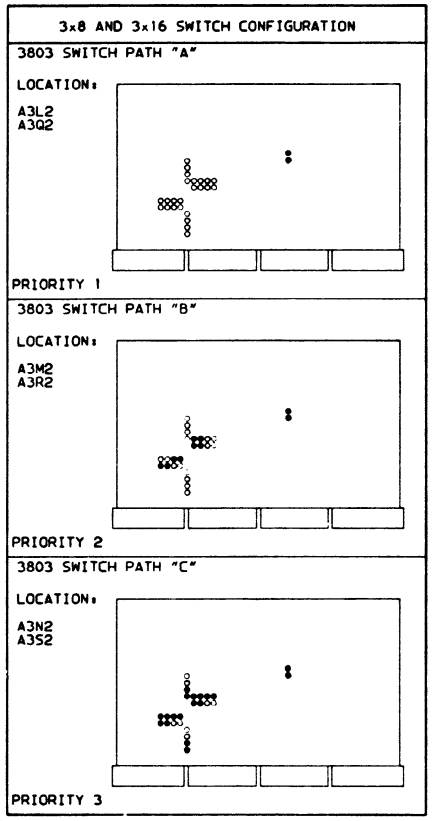

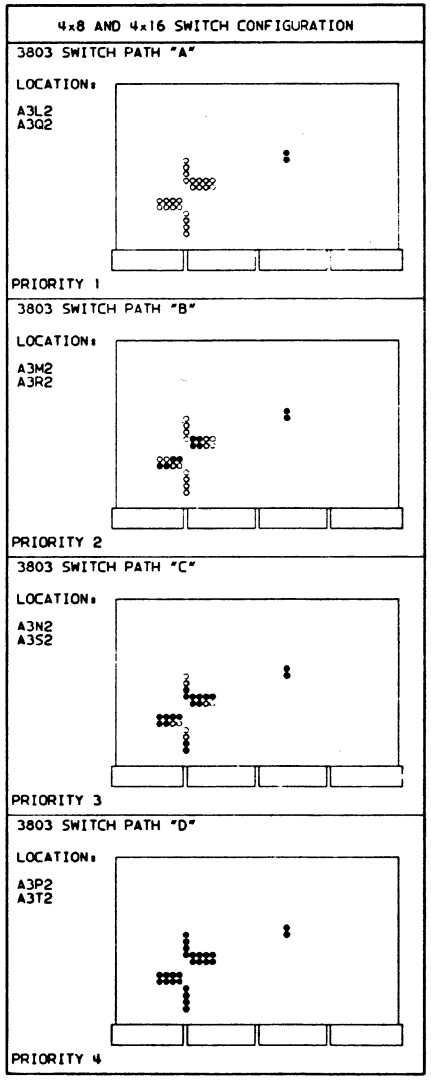

EC	SEE EC	846771			
DATE	HISTORY	11JUN82			

PN 1846375

"THIS DOCUMENT IS THE PROPERTY OF IBM. ITS USE IS AUTHORIZED ONLY FOR RESPONDING TO A REQUEST FOR QUOTATION OR FOR THE PERFORMANCE OF WORK FOR IBM. ALL QUESTIONS MUST BE REFERRED TO THE IBM PURCHASING DEPARTMENT."

9 TAPE CONTROL SERIAL NUMBER/EC LEVEL/FEATURE CODE:

PLUGGING EXAMPLE: TAPE CONTROL SERIAL NUMBER IS 10430, WITH 9-TRACK FEATURE.

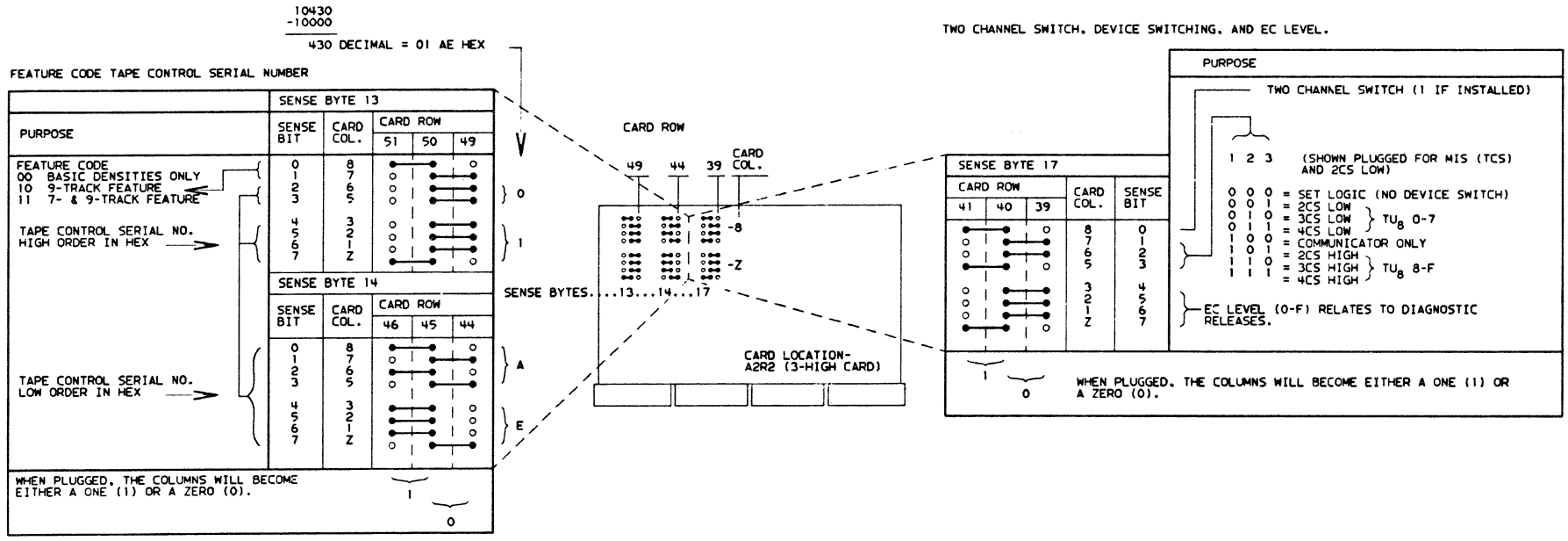

EC	SEE EC	846771			
DATE	HISTORY	11JUN82			

PN 1346375

"THIS DOCUMENT IS THE PROPERTY OF IBM. ITS USE IS AUTHORIZED ONLY FOR RESPONDING TO A REQUEST FOR QUOTATION OR FOR THE PERFORMANCE OF WORK FOR IBM. ALL QUESTIONS MUST BE REFERRED TO THE IBM PURCHASING DEPARTMENT."

MASTER

PLUGGING CHART AA010
3803.002

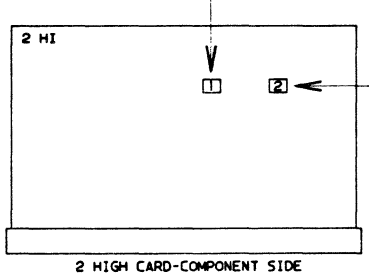

FUNCTION	SYSTEM LOGIC	CARD TYPE	CARD LOCATION	PLUGGING-REF MST CARD BY FUNCTION	
(1)	QB121	DE01	B2J2	1	2
(2) PATCH CARD ALU1				MOD 2	ALU 1
(1)	QA121	DE01	A2G2	1	2
(2) PATCH CARD ALU2				MOD 2	ALU 2

EC	SEE EC	846771			
DATE	HISTORY	11JUN82			

PN 1846375

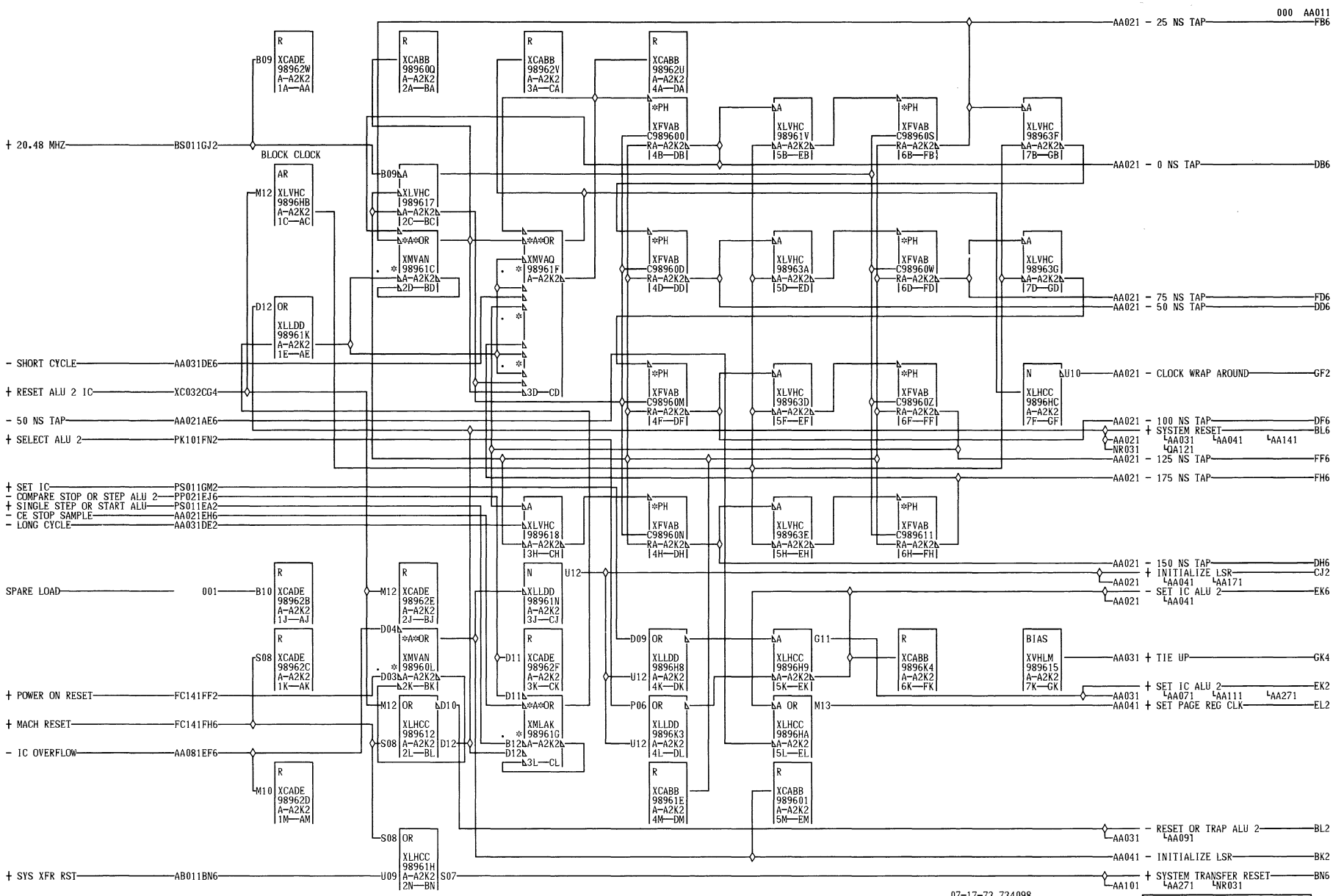
000 AA011
AA021 - 25 NS TAP FB6
+ 20.48 MHZ BS011GJ2
BLOCK CLOCK
AA021 - 0 NS TAP DB6
AA021 - 75 NS TAP FD6
AA021 - 50 NS TAP DD6
- SHORT CYCLE AA031DE6
+ RESET ALU 2 IC XC032CG4
AA021 - CLOCK WRAP AROUND GF2
- 50 NS TAP AA021AE6
AA021 - 100 NS TAP DF6
+ SELECT ALU 2 PK101FN2
+ SYSTEM RESET BL6
AA021 - 125 NS TAP FF6
AA021 - 175 NS TAP FH6
+ SET IC PS011GM2
- COMPARE STOP OR STEP ALU 2 PP021EJ6
+ SINGLE STEP OR START ALU PS011EA2
- CE STOP SAMPLE AA021EH6
- LONG CYCLE AA031DE2
AA021 - 150 NS TAP DH6
SPARE LOAD 001
+ INITIALIZE LSR CJ2
- SET IC ALU 2 EK6
+ TIE UP GK4
+ POWER ON RESET FC141FF2
+ SET IC ALU 2 EK2
+ MACH RESET FC141FH6
+ SET PAGE REG CLK EL2
- IC OVERFLOW AA081EF6
- RESET OR TRAP ALU 2 BL2
AA041 - INITIALIZE LSR BK2
+ SYS XFR RST AB011BN6
+ SYSTEM TRANSFER RESET BN6
07-17-73 734098
BASIC CLOCK TIMINGS
ALU 2
DATE 08-08-73 MACH. 3803-2
LOG 0051 FRAME 01
P.N. 2736129
IBM CORP. SDD BLK. GP
AA011
000

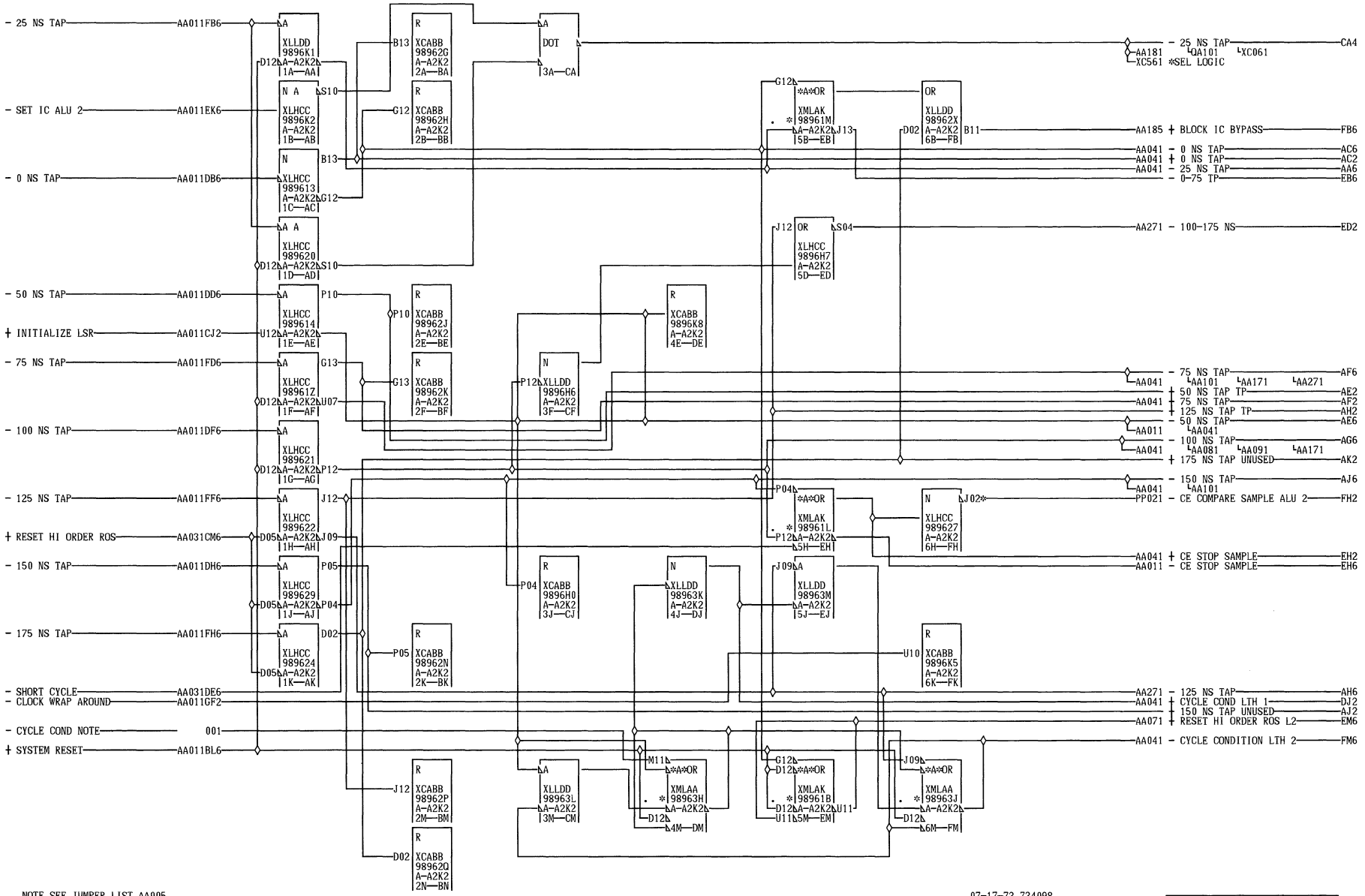

NOTE SEE JUMPER LIST AA005

FH2 A-A2B2B08
01A-A1A5B08

07-17-73 734098

DELAY LINE ALU 2	
DATE 08-08-73 MACH. 3803-2	
LOG 0051 FRAME 01	
P.N. 2736130	
IBM CORP. SDD BLK. GN	

A A 0 2 1 000

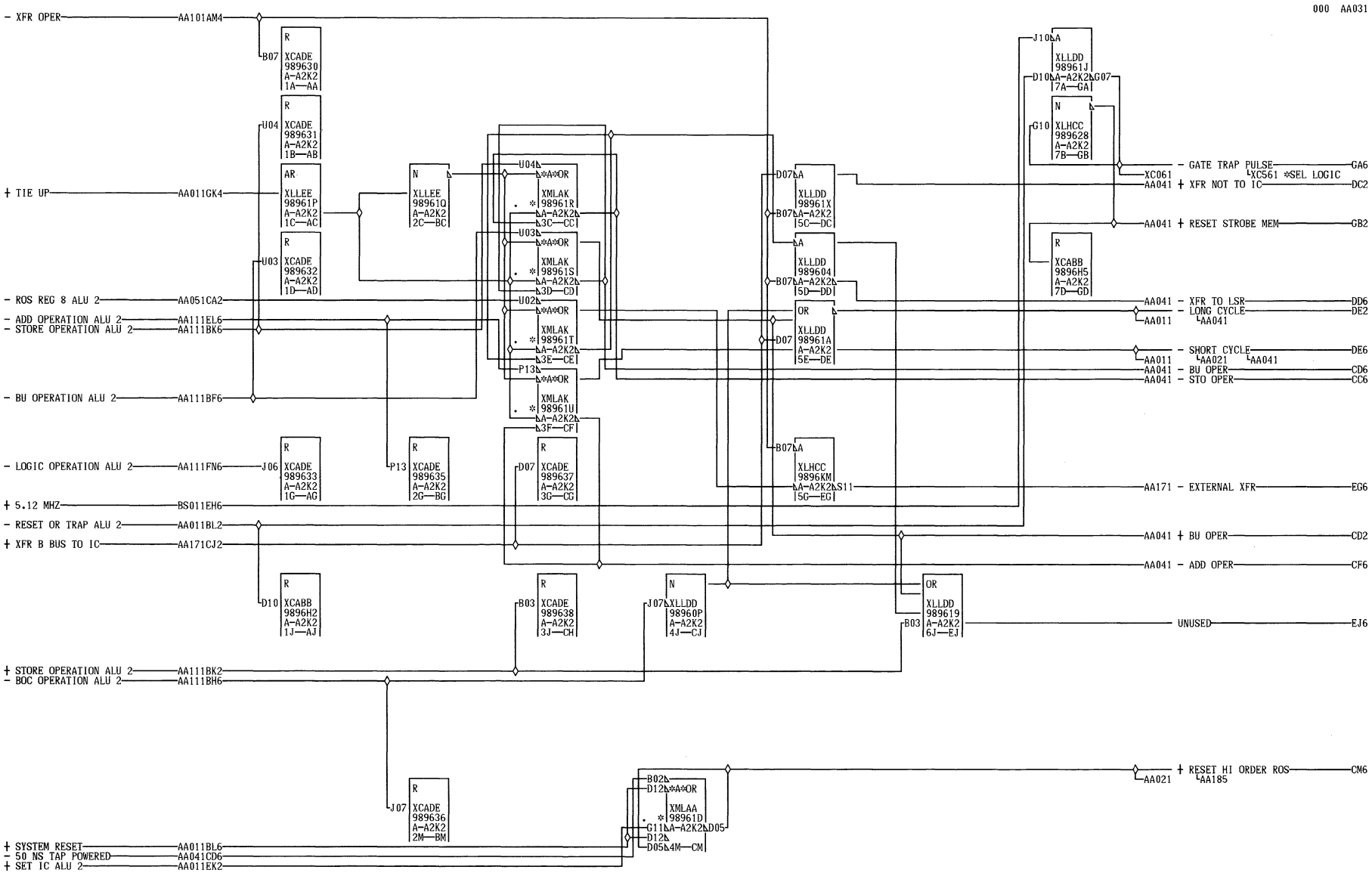
000 AA031
- XFR OPER AA101AM4
+ TIE UP AA011GK4
- ROS REG 8 ALU 2 AA051CA2
- ADD OPERATION ALU 2 AA111EL6
- STORE OPERATION ALU 2 AA111BK6
- BU OPERATION ALU 2 AA111BF6
- LOGIC OPERATION ALU 2 AA111FN6
+ 5.12 MHZ BS011EH6
- RESET OR TRAP ALU 2 AA011BL2
+ XFR B BUS TO IC AA171CJ2
+ STORE OPERATION ALU 2 AA111BK2
- BOC OPERATION ALU 2 AA111BH6
+ SYSTEM RESET AA011BL6
- 50 NS TAP POWERED AA041CD6
+ SET IC ALU 2 AA011EK2
B07 XCADE 989630 A-A2K2 1A—AA
U04 XCADE 989631 A-A2K2 1B—AB
U03 XCADE 989632 A-A2K2 1D—AD
J06 XCADE 989633 A-A2K2 1G—AG
P13 XCADE 989635 A-A2K2 2G—BG
D07 XCADE 989637 A-A2K2 3G—CG
B03 XCADE 989638 A-A2K2 3J—CH
J07 XCADE 989636 A-A2K2 2M—BM
D10 XCABB 9896H2 A-A2K2 1J—AJ
XLLEE 98961P A-A2K2 1C—AC
XLLEE 98961Q A-A2K2 2C—BC
U04 *A*OR XMLAK 98961R A-A2K2 3C—CC
U03 *A*OR XMLAK 98961S A-A2K2 3D—CD
U02 *A*OR XMLAK 98961T A-A2K2 3E—CE
P13 *A*OR XMLAK 98961U A-A2K2 3F—CF
B02 D12 *A*OR XMLAA 98961D A-A2K2 D05 G11 D12 D05 4M—CM
XLLDD 98961X A-A2K2 5C—DC
XLLDD 989604 A-A2K2 5D—DD
XLLDD 98961A A-A2K2 5E—DE
XLHCC 9896KM A-A2K2 5G—EG
XLLDD 98961J A-A2K2 7A—GA
XLHCC 989628 A-A2K2 7B—GB
XCABB 9896H5 A-A2K2 7D—GD
XLLDD 989619 A-A2K2 6J—EJ
XLLDD 98960P A-A2K2 4J—CJ
J10 D10 B07 G10 G07 B03
- GATE TRAP PULSE GA6
XC061 XC561 *SEL LOGIC
AA041 + XFR NOT TO IC DC2
AA041 + RESET STROBE MEM GB2
AA041 - XFR TO LSR DD6
- LONG CYCLE DE2
AA011 AA041
- SHORT CYCLE DE6
AA011 AA021 AA041
AA041 - BU OPER CD6
AA041 - STO OPER CC6
AA171 - EXTERNAL XFR EG6
AA041 + BU OPER CD2
AA041 - ADD OPER CF6
UNUSED EJ6
+ RESET HI ORDER ROS CM6
AA021 AA185
07-17-73 734098
CLOCK GATING
ALU 2
DATE 08-08-73 MACH. 3803-2
LOG 0051 FRAME 01
P.N. 2736131
IBM CORP. SDD BLK. GE
A A 0 3 1 000

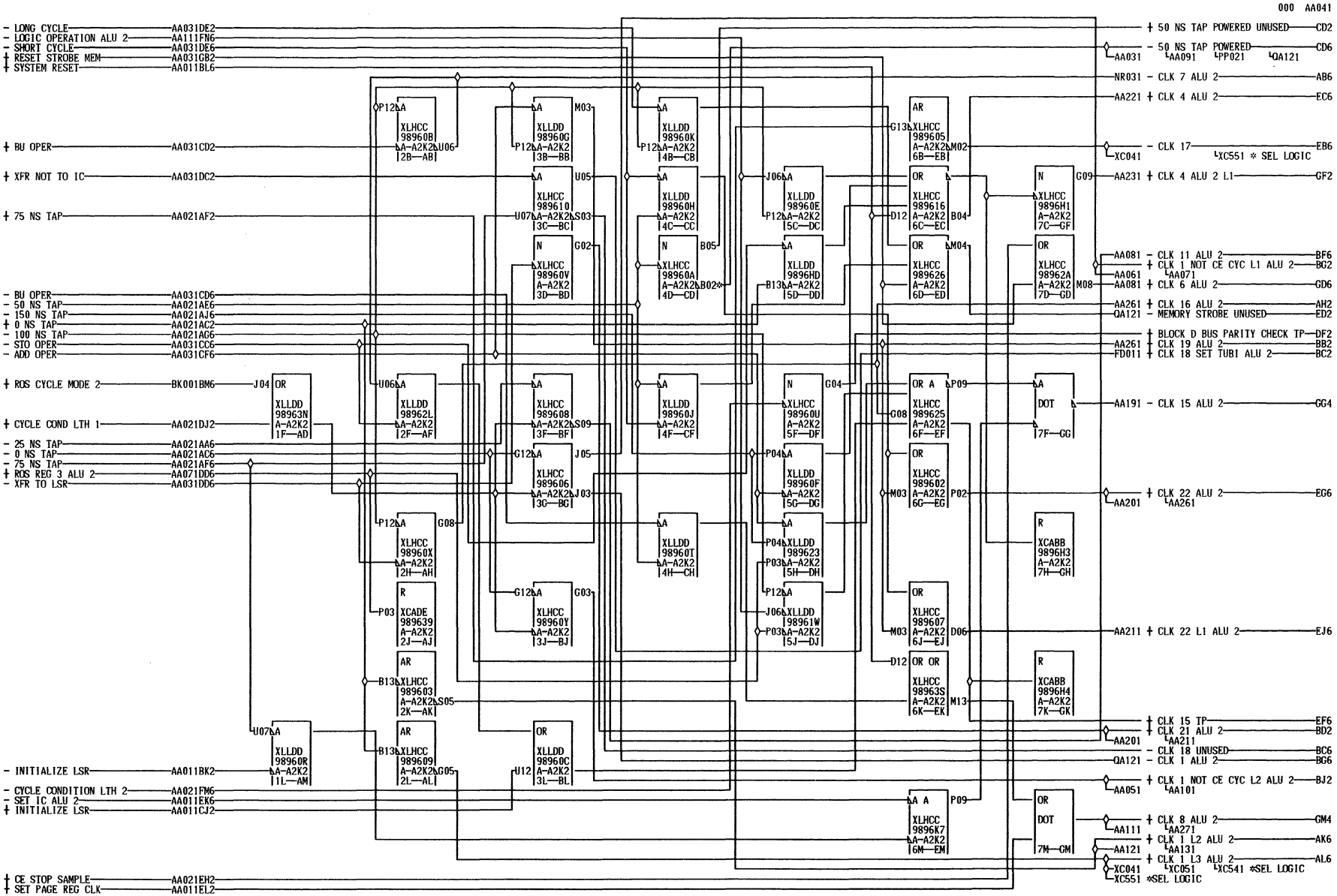
000 AA041
- LONG CYCLE AA031DE2
- LOGIC OPERATION ALU 2 AA111FN6
- SHORT CYCLE AA031DE6
+ RESET STROBE MEM AA031GB2
+ SYSTEM RESET AA011BL6
+ BU OPER AA031CD2
+ XFR NOT TO IC AA031DC2
+ 75 NS TAP AA021AF2
- BU OPER AA031CD6
- 50 NS TAP AA021AE6
- 150 NS TAP AA021AJ6
+ 0 NS TAP AA021AC2
- 100 NS TAP AA021AG6
- STO OPER AA031CC6
- ADD OPER AA031CF6
+ ROS CYCLE MODE 2 BK001BM6
+ CYCLE COND LTH 1 AA021DJ2
- 25 NS TAP AA021AA6
- 0 NS TAP AA021AC6
- 75 NS TAP AA021AF6
+ ROS REG 3 ALU 2 AA071DD6
- XFR TO LSR AA031DD6
- INITIALIZE LSR AA011BK2
- CYCLE CONDITION LTH 2 AA021FM6
- SET IC ALU 2 AA011EK6
+ INITIALIZE LSR AA011CJ2
+ CE STOP SAMPLE AA021EH2
+ SET PAGE REG CLK AA011EL2
+ 50 NS TAP POWERED UNUSED CD2
- 50 NS TAP POWERED CD6
AA031 AA091 PP021 QA121
NR031 - CLK 7 ALU 2 AB6
AA221 + CLK 4 ALU 2 EC6
- CLK 17 EB6
XC041 XC551 * SEL LOGIC
AA231 + CLK 4 ALU 2 L1 GF2
AA081 - CLK 11 ALU 2 BF6
+ CLK 1 NOT CE CYC L1 ALU 2 BG2
AA061 AA071
AA081 + CLK 6 ALU 2 GD6
AA261 + CLK 16 ALU 2 AH2
QA121 - MEMORY STROBE UNUSED ED2
+ BLOCK D BUS PARITY CHECK TP DF2
AA261 + CLK 19 ALU 2 BB2
FD011 + CLK 18 SET TUBI ALU 2 BC2
AA191 - CLK 15 ALU 2 GG4
+ CLK 22 ALU 2 EG6
AA201 AA261
AA211 + CLK 22 L1 ALU 2 EJ6
+ CLK 15 TP EF6
+ CLK 21 ALU 2 BD2
AA201 AA211
- CLK 18 UNUSED BC6
QA121 - CLK 1 ALU 2 BG6
+ CLK 1 NOT CE CYC L2 ALU 2 BJ2
AA051 AA101
+ CLK 8 ALU 2 GM4
AA111 AA271
+ CLK 1 L2 ALU 2 AK6
AA121 AA131
+ CLK 1 L3 ALU 2 AL6
XC041 XC051 XC541 *SEL LOGIC
XC551 *SEL LOGIC
XLHCC 98960B A-A2K2 2B—AB
XLLDD 98960G A-A2K2 3B—BB
XLLDD 98960K A-A2K2 4B—CB
XLHCC 989605 A-A2K2 6B—EB
XLHCC 989610 A-A2K2 3C—BC
XLLDD 98960H A-A2K2 4C—CC
XLLDD 98960E A-A2K2 5C—EC
XLHCC 989616 A-A2K2 6C—EC
XLHCC 9896H1 A-A2K2 7C—CF
XLHCC 98960V A-A2K2 3D—BD
XLHCC 98960A A-A2K2 4D—CD
XLLDD 9896HD A-A2K2 5D—DD
XLHCC 989626 A-A2K2 6D—ED
XLHCC 98962A A-A2K2 7D—GD
XLLDD 98963N A-A2K2 1F—AD
XLLDD 98962L A-A2K2 2F—AF
XLHCC 989608 A-A2K2 3F—BF
XLLDD 98960J A-A2K2 4F—CF
XLHCC 98960U A-A2K2 5F—DF
XLHCC 989625 A-A2K2 6F—EF
DOT 7F—GG
XLHCC 989606 A-A2K2 3G—BG
XLLDD 98960F A-A2K2 5G—DG
XLHCC 989602 A-A2K2 6G—EG
XLHCC 98960X A-A2K2 2H—AH
XLLDD 98960T A-A2K2 4H—CH
XLLDD 989623 A-A2K2 5H—DH
XCABB 9896H3 A-A2K2 7H—GH
XCADE 989639 A-A2K2 2J—AJ
XLHCC 98960Y A-A2K2 3J—BJ
XLLDD 98961W A-A2K2 5J—DJ
XLHCC 989607 A-A2K2 6J—EJ
XLHCC 989603 A-A2K2 2K—AK
XLHCC 98963S A-A2K2 6K—EK
XCABB 9896H4 A-A2K2 7K—GK
XLLDD 98960R A-A2K2 1L—AM
XLHCC 989609 A-A2K2 2L—AL
XLLDD 98960C A-A2K2 3L—BL
XLHCC 9896K7 A-A2K2 6M—EM
DOT 7M—GM
CD6 A-A2N1C11
01A-A1N6C02
07-17-73 734098
07-16-80 846627
CLOCK POWERING
ALU 2
DATE 08-18-81 MACH. 3803-2
LOG 1002 FRAME 01
P.N. 2736132
IBM CORP. SDD BLK. GN
A A 0 4 1 000

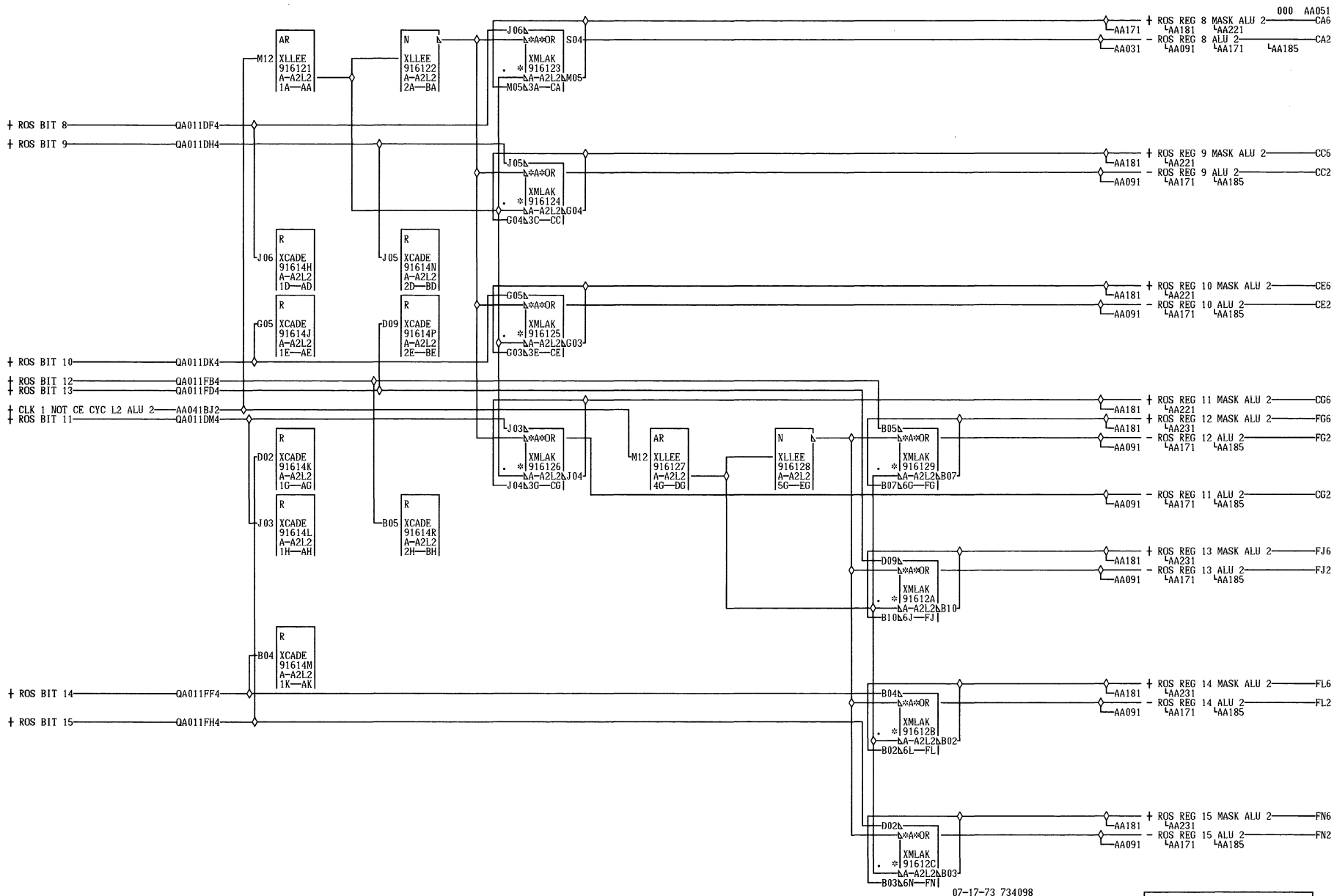
000 AA051
+ ROS BIT 8 QA011DF4
+ ROS BIT 9 QA011DH4
+ ROS BIT 10 QA011DK4
+ ROS BIT 12 QA011FB4
+ ROS BIT 13 QA011FD4
+ CLK 1 NOT CE CYC L2 ALU 2 AA041BJ2
+ ROS BIT 11 QA011DM4
+ ROS BIT 14 QA011FF4
+ ROS BIT 15 QA011FH4
+ ROS REG 8 MASK ALU 2 CA6
- ROS REG 8 ALU 2 CA2
+ ROS REG 9 MASK ALU 2 CC6
- ROS REG 9 ALU 2 CC2
+ ROS REG 10 MASK ALU 2 CE6
- ROS REG 10 ALU 2 CE2
+ ROS REG 11 MASK ALU 2 CG6
+ ROS REG 12 MASK ALU 2 FG6
- ROS REG 12 ALU 2 FG2
- ROS REG 11 ALU 2 CG2
+ ROS REG 13 MASK ALU 2 FJ6
- ROS REG 13 ALU 2 FJ2
+ ROS REG 14 MASK ALU 2 FL6
- ROS REG 14 ALU 2 FL2
+ ROS REG 15 MASK ALU 2 FN6
- ROS REG 15 ALU 2 FN2
07-17-73 734098
LOW ORDER ROS REGISTER ALU 2
DATE 08-08-73 MACH. 3803-2
LOG 0051 FRAME 01
P.N. 2736133
IBM CORP. BLK. GK
A A 0 5 1 000

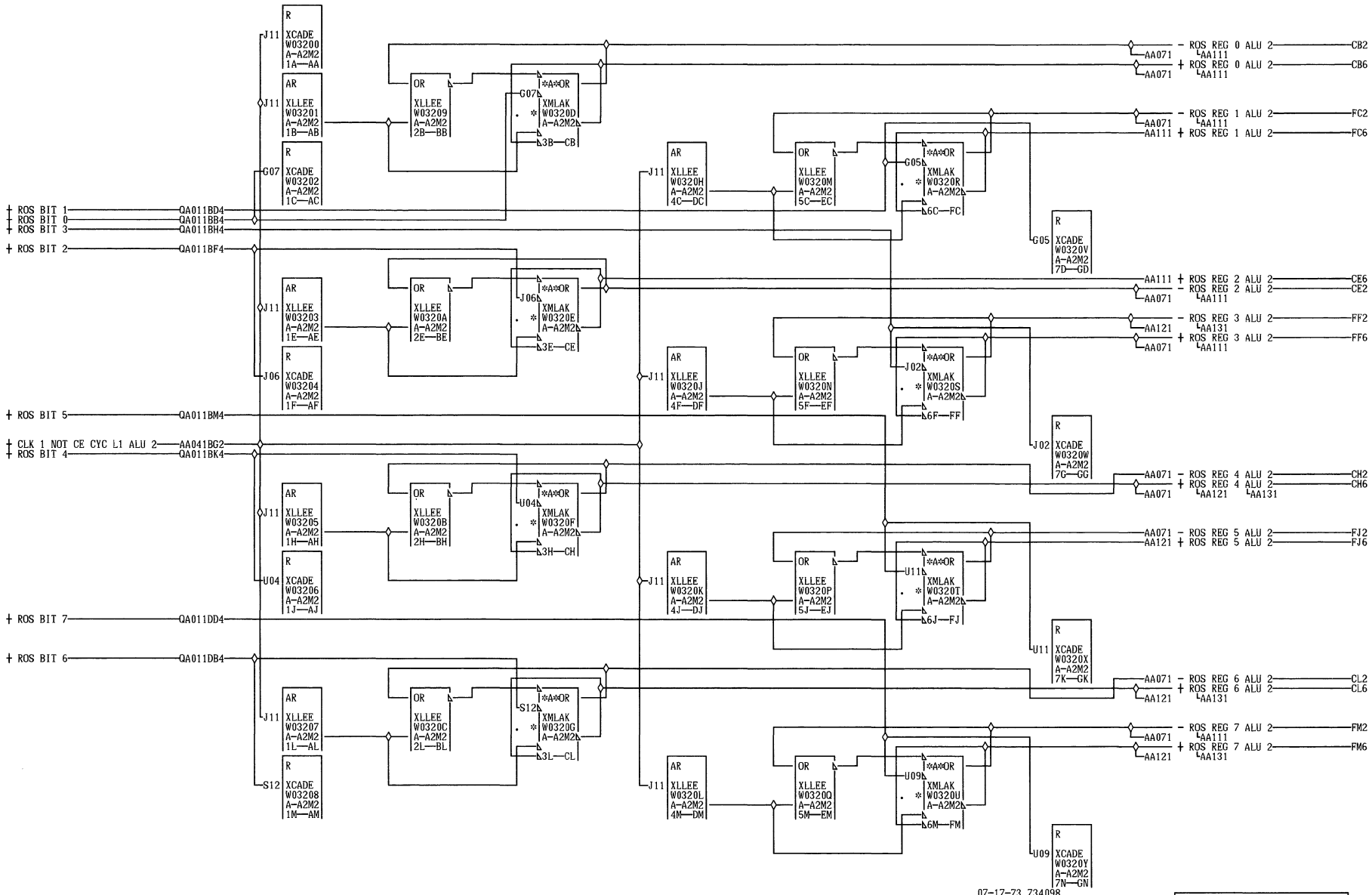

07-17-73 734098

ROS REG 0-7 ALU 2			
DATE	08-08-73	MACH. 3803-2	
LOG	0051	FRAME	01
		P.N.	2736134
IBM CORP.	SDD BLK.		GP

AA061 000

AA061 000

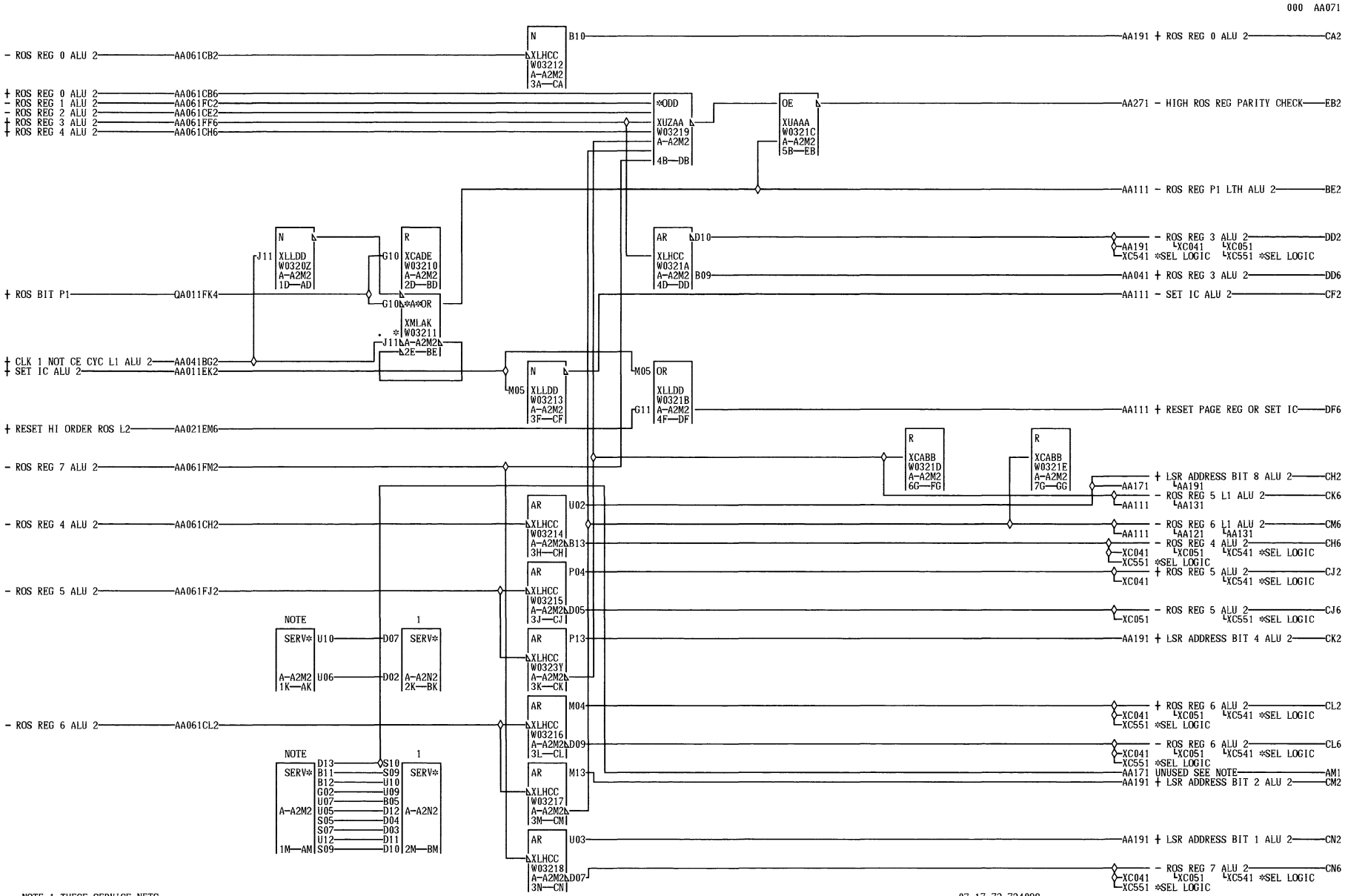
000 AA071
- ROS REG 0 ALU 2 AA061CB2
+ ROS REG 0 ALU 2 AA061CB6
- ROS REG 1 ALU 2 AA061FC2
- ROS REG 2 ALU 2 AA061CE2
+ ROS REG 3 ALU 2 AA061FF6
+ ROS REG 4 ALU 2 AA061CH6
+ ROS BIT P1 QA011FK4
+ CLK 1 NOT CE CYC L1 ALU 2 AA041BG2
+ SET IC ALU 2 AA011EK2
+ RESET HI ORDER ROS L2 AA021EM6
- ROS REG 7 ALU 2 AA061FM2
- ROS REG 4 ALU 2 AA061CH2
- ROS REG 5 ALU 2 AA061FJ2
- ROS REG 6 ALU 2 AA061CL2
N XLHCC W03212 A-A2M2 3A—CA B10
*ODD XUZAA W03219 A-A2M2 4B—DB
OE XUAAA W0321C A-A2M2 5B—EB
N XLLDD W0320Z A-A2M2 1D—AD J11
R XCADE W03210 A-A2M2 2D—BD G10
*A*OR XMLAK W03211 A-A2M2 2E—BE J11 G10
N XLLDD W03213 A-A2M2 3F—CF M05
OR XLLDD W0321B A-A2M2 4F—DF M05 G11
AR XLHCC W0321A A-A2M2 4D—DD D10 B09
R XCABB W0321D A-A2M2 6G—FG
R XCABB W0321E A-A2M2 7G—GG
AR XLHCC W03214 A-A2M2 3H—CH U02 B13
AR XLHCC W03215 A-A2M2 3J—CJ P04 D05
AR XLHCC W0323Y A-A2M2 3K—CK P13
AR XLHCC W03216 A-A2M2 3L—CL M04 D09
AR XLHCC W03217 A-A2M2 3M—CM M13
AR XLHCC W03218 A-A2M2 3N—CN U03 D07
NOTE SERV* A-A2M2 1K—AK U10 U06 D07 D02 1 SERV* A-A2N2 2K—BK
NOTE SERV* A-A2M2 1M—AM D13 B11 B12 G02 U07 U05 S05 S07 U12 S09 S10 S09 U10 U09 B05 D12 D04 D03 D11 D10 1 SERV* A-A2N2 2M—BM
AA191 + ROS REG 0 ALU 2 CA2
AA271 - HIGH ROS REG PARITY CHECK EB2
AA111 - ROS REG P1 LTH ALU 2 BE2
- ROS REG 3 ALU 2 DD2
AA191 XC041 XC051 XC541 *SEL LOGIC XC551 *SEL LOGIC
AA041 + ROS REG 3 ALU 2 DD6
AA111 - SET IC ALU 2 CF2
AA111 + RESET PAGE REG OR SET IC DF6
+ LSR ADDRESS BIT 8 ALU 2 CH2
AA171 AA191
- ROS REG 5 L1 ALU 2 CK6
AA111 AA131
- ROS REG 6 L1 ALU 2 CM6
AA111 AA121 AA131
- ROS REG 4 ALU 2 CH6
XC041 XC051 XC541 *SEL LOGIC
XC551 *SEL LOGIC
+ ROS REG 5 ALU 2 CJ2
XC041 XC541 *SEL LOGIC
- ROS REG 5 ALU 2 CJ6
XC051 XC551 *SEL LOGIC
AA191 + LSR ADDRESS BIT 4 ALU 2 CK2
+ ROS REG 6 ALU 2 CL2
XC041 XC051 XC541 *SEL LOGIC
XC551 *SEL LOGIC
- ROS REG 6 ALU 2 CL6
XC041 XC051 XC541 *SEL LOGIC
XC551 *SEL LOGIC
AA171 UNUSED SEE NOTE AM1
AA191 + LSR ADDRESS BIT 2 ALU 2 CM2
AA191 + LSR ADDRESS BIT 1 ALU 2 CN2
- ROS REG 7 ALU 2 CN6
XC041 XC051 XC541 *SEL LOGIC
XC551 *SEL LOGIC
NOTE 1 THESE SERVICE NETS ARE TO RETAIN NETS NOT USED BY W032 AND W034 CARDS BUT USED BY 9148 AND 9160 CARDS WHEN INSTALLED.
07-17-73 734098
ROS REG POWERING ALU 2
DATE 08-08-73 MACH. 3803-2
LOG 0051 FRAME 01
P.N. 2736135
IBM CORP. SDD BLK. GH
A A0 71 000
000

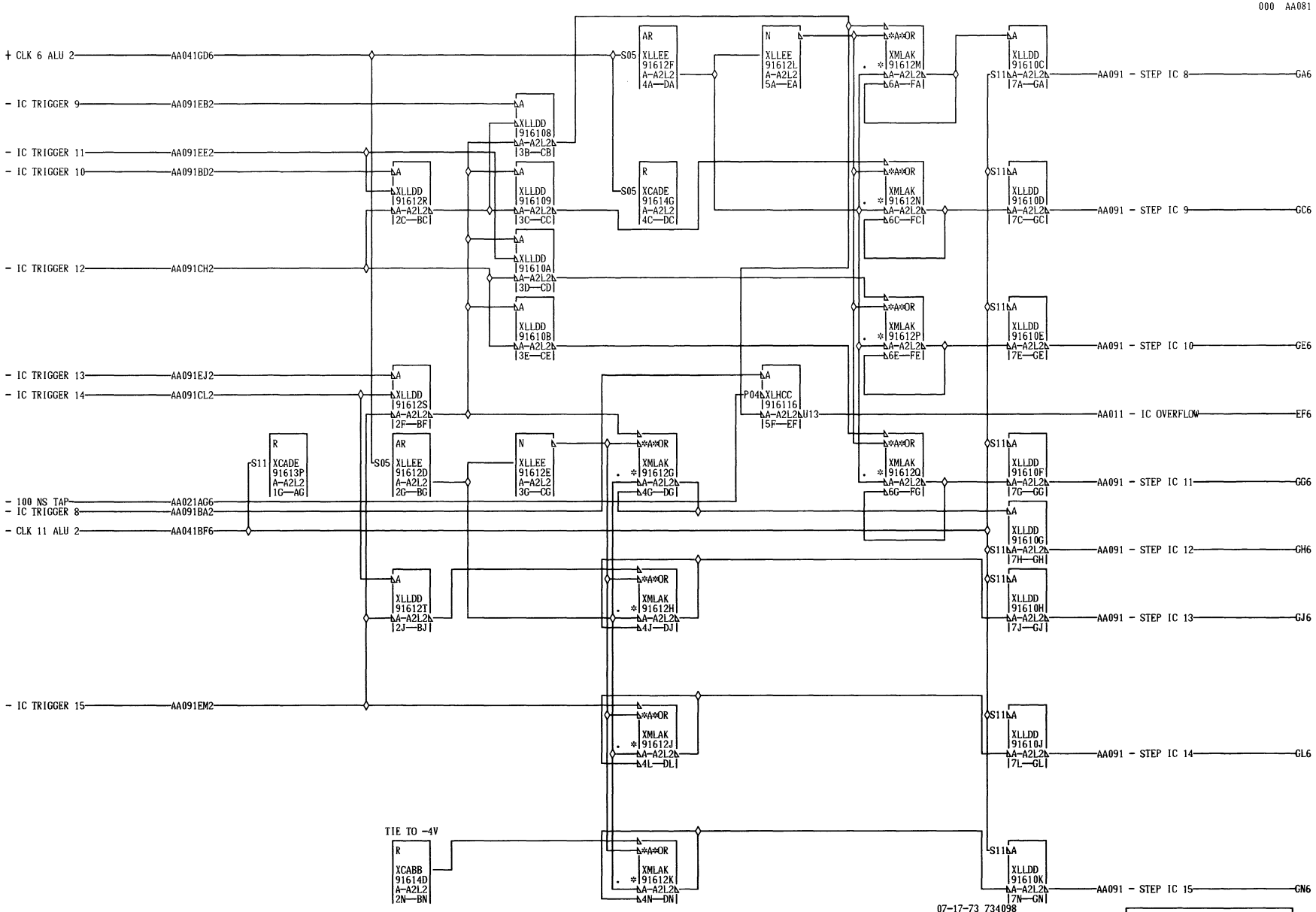

INSTRUCTION COUNTER LOOK-AHEAD
ALU 2
DATE 08-18-81 MACH. 3803-2
LOG 0051 FRAME 01
P.N. 2736136
IBM CORP. BLK. GP

AA081 000

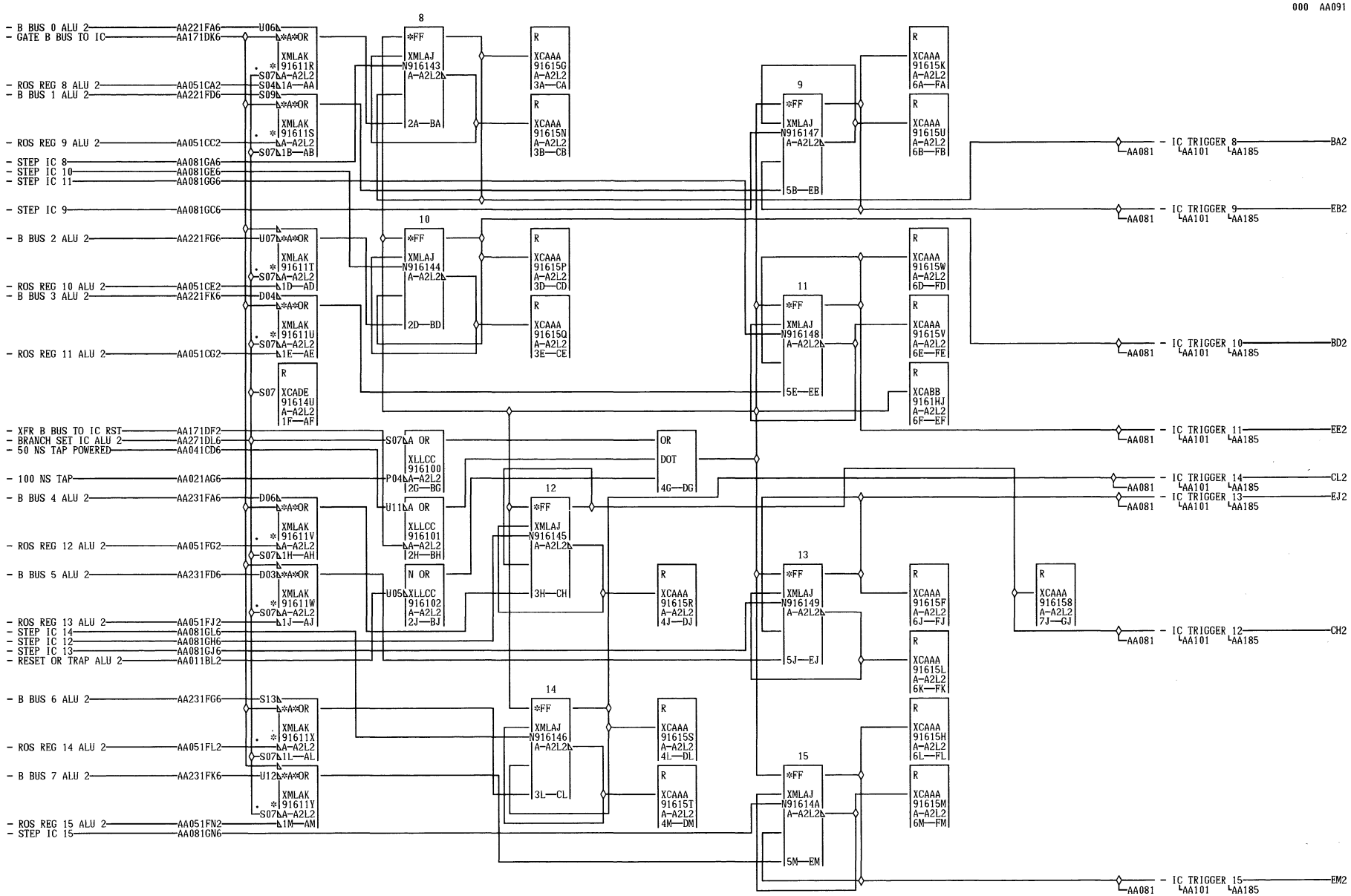

07-17-73 734098

INSTRUCTION COUNTER
ALU 2
DATE 08-08-73 MACH. 3803-2
LOG 0051 FRAME 01
P.N. 2736137
IBM CORP. BLK. GN

AA091 000

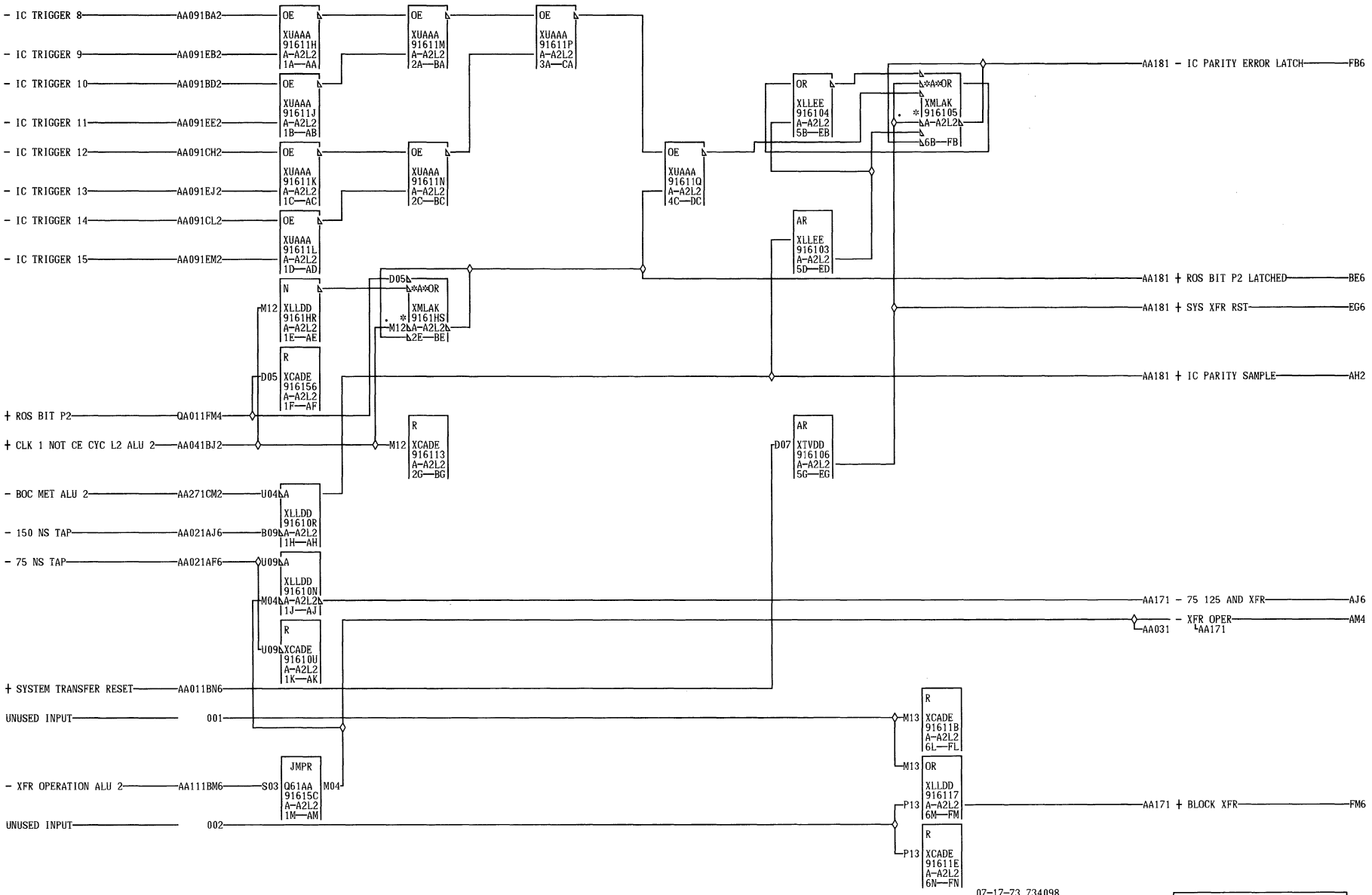

07-17-73 734098

A A 1 0 1 000

LOAD INSTRUCTION COUNTER PARITY CHECK ALU 2			
DATE 08-08-73 MACH. 3803-2			
LOG 0051	FRAME	01	
	P.N.	2736138	
IBM CORP.	BLK.	GL	

A A 1 0 1 000

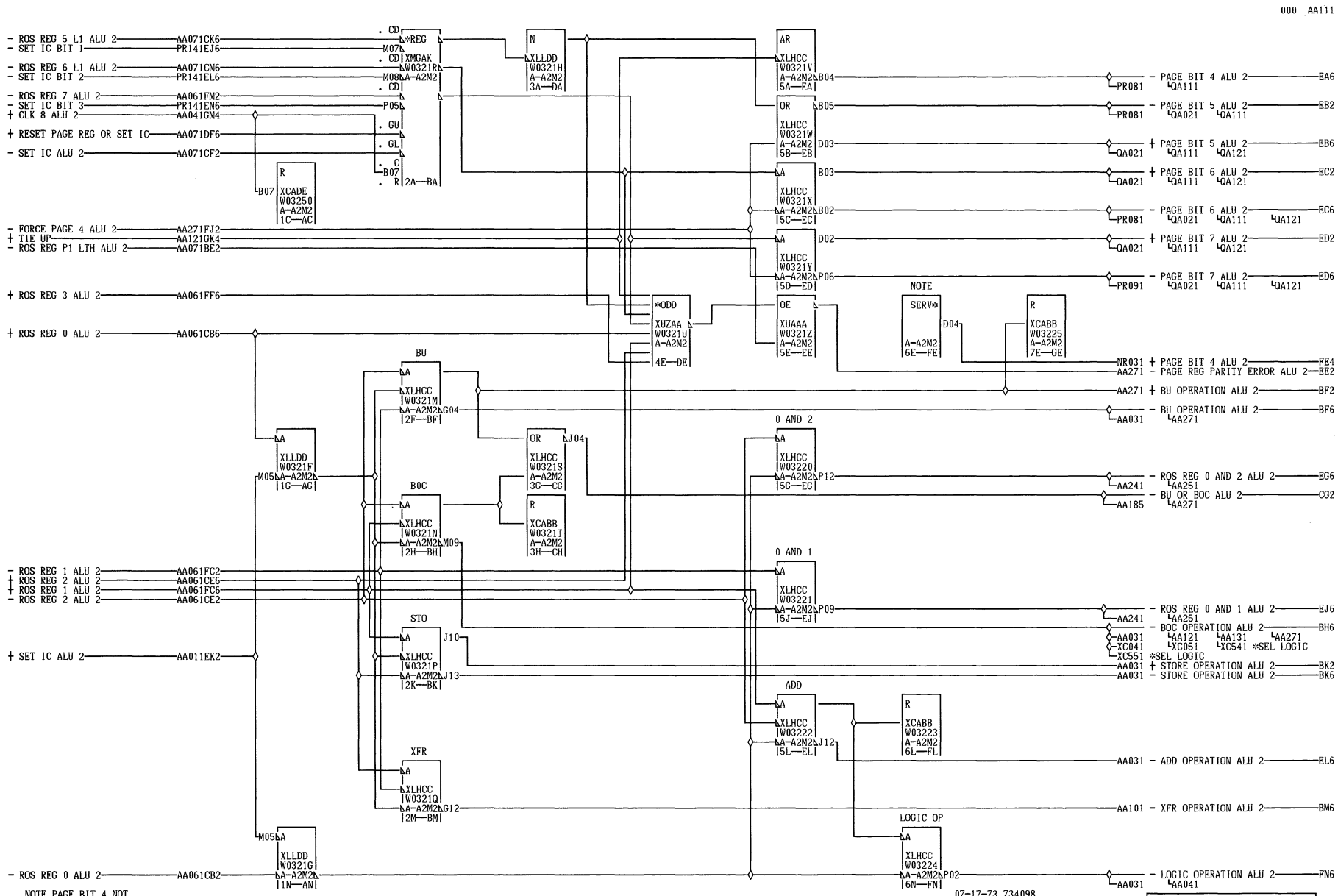
- ROS REG 5 L1 ALU 2 AA071CK6
- SET IC BIT 1 PR141EJ6
- ROS REG 6 L1 ALU 2 AA071CM6
- SET IC BIT 2 PR141EL6
- ROS REG 7 ALU 2 AA061FM2
- SET IC BIT 3 PR141EN6
+ CLK 8 ALU 2 AA041GM4
+ RESET PAGE REG OR SET IC AA071DF6
- SET IC ALU 2 AA071CF2
- FORCE PAGE 4 ALU 2 AA271FJ2
+ TIE UP AA121GK4
- ROS REG P1 LTH ALU 2 AA071BE2
+ ROS REG 3 ALU 2 AA061FF6
+ ROS REG 0 ALU 2 AA061CB6
- ROS REG 1 ALU 2 AA061FC2
+ ROS REG 2 ALU 2 AA061CE6
+ ROS REG 1 ALU 2 AA061FC6
- ROS REG 2 ALU 2 AA061CE2
+ SET IC ALU 2 AA011EK2
- ROS REG 0 ALU 2 AA061CB2
NOTE PAGE BIT 4 NOT AVAILABLE WHEN THIS A CARD IS INSTALLED
- PAGE BIT 4 ALU 2 EA6
- PAGE BIT 5 ALU 2 EB2
+ PAGE BIT 5 ALU 2 EB6
+ PAGE BIT 6 ALU 2 EC2
- PAGE BIT 6 ALU 2 EC6
+ PAGE BIT 7 ALU 2 ED2
- PAGE BIT 7 ALU 2 ED6
+ PAGE BIT 4 ALU 2 FE4
- PAGE REG PARITY ERROR ALU 2 EE2
+ BU OPERATION ALU 2 BF2
- BU OPERATION ALU 2 BF6
- ROS REG 0 AND 2 ALU 2 EG6
- BU OR BOC ALU 2 CG2
- ROS REG 0 AND 1 ALU 2 EJ6
- BOC OPERATION ALU 2 BH6
+ STORE OPERATION ALU 2 BK2
- STORE OPERATION ALU 2 BK6
- ADD OPERATION ALU 2 EL6
- XFR OPERATION ALU 2 BM6
- LOGIC OPERATION ALU 2 FN6
07-17-73 734098
PAGE REG AND INSTRUCTION DCD ALU 2
DATE 08-08-73 MACH. 3803-2
LOG 0051 FRAME 01
P.N. 2736139
IBM CORP. SDD BLK. GF

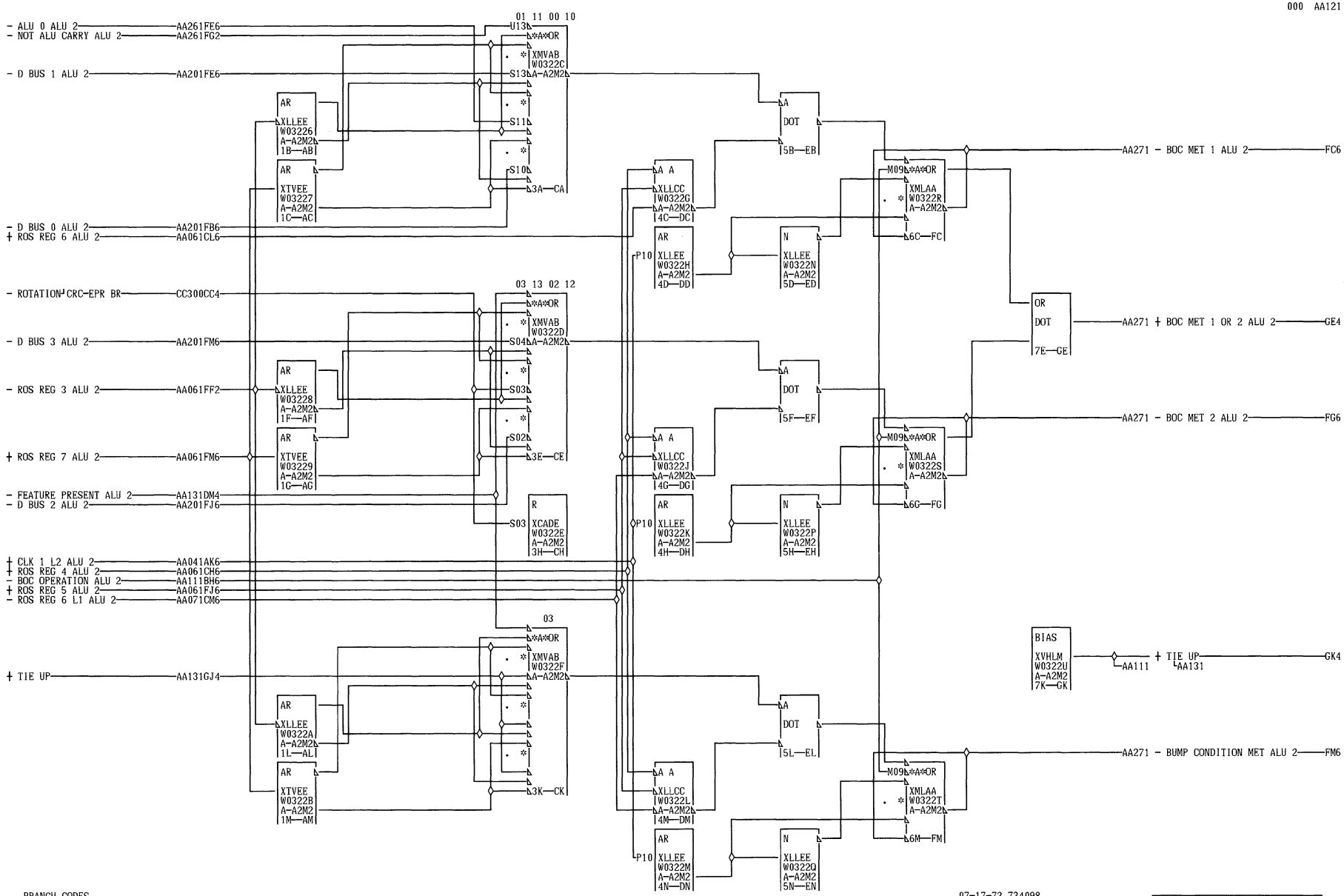

BRANCH CODES
00 ALU 0
A 01 NOT ALU CARRY
A 02 NOT FC3
1 03 FEATURE PRESENT
2 10 D BUS 0 11 D BUS 1
1 12 D BUS 2 13 D BUS 3

000

07-17-73 734098

BOC CONDITIONS ALU 2		
DATE 08-08-73 MACH. 3803-2		A
LOG 0051 FRAME 01		A 1 2 1
P.N. 2736140		
IBM CORP. SDD BLK. GL		000

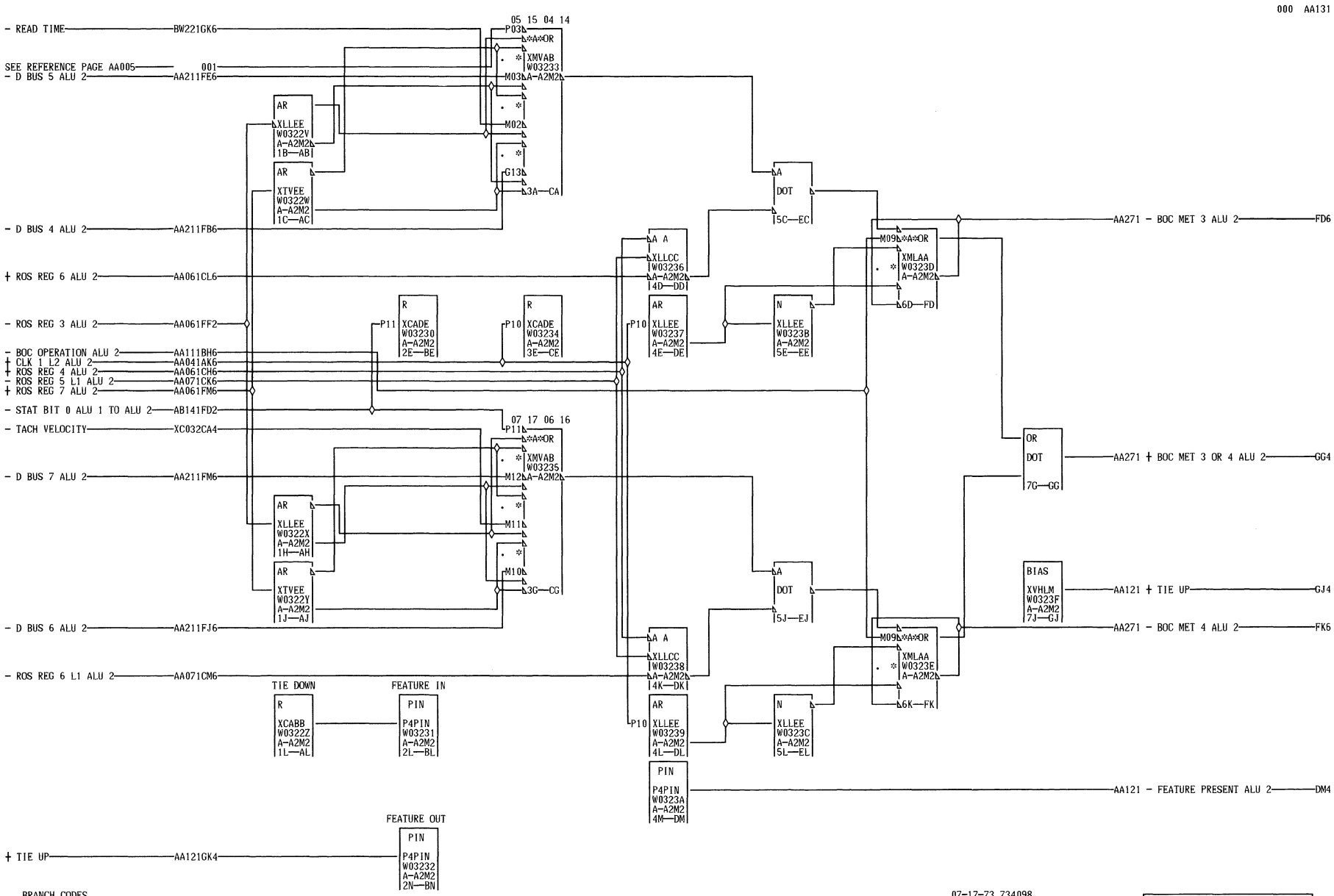

BRANCH CODES
04 READ TIME
A 05 9 TRK NRZI
A 06 TACH VELOCITY
1 07 STOP STAT
3 14 D BUS 4 15 D BUS 5
1 16 D BUS 6 17 D BUS 7

000

07-17-73 734098
12-06-73 734879

BOC CONDITIONS ALU 2			
DATE	01-11-74	MACH. 3803-2	A A 1
LOG	0045	FRAME 01	3 1
		P.N. 2736141	000
IBM CORP.	SDD BLK.	GK	

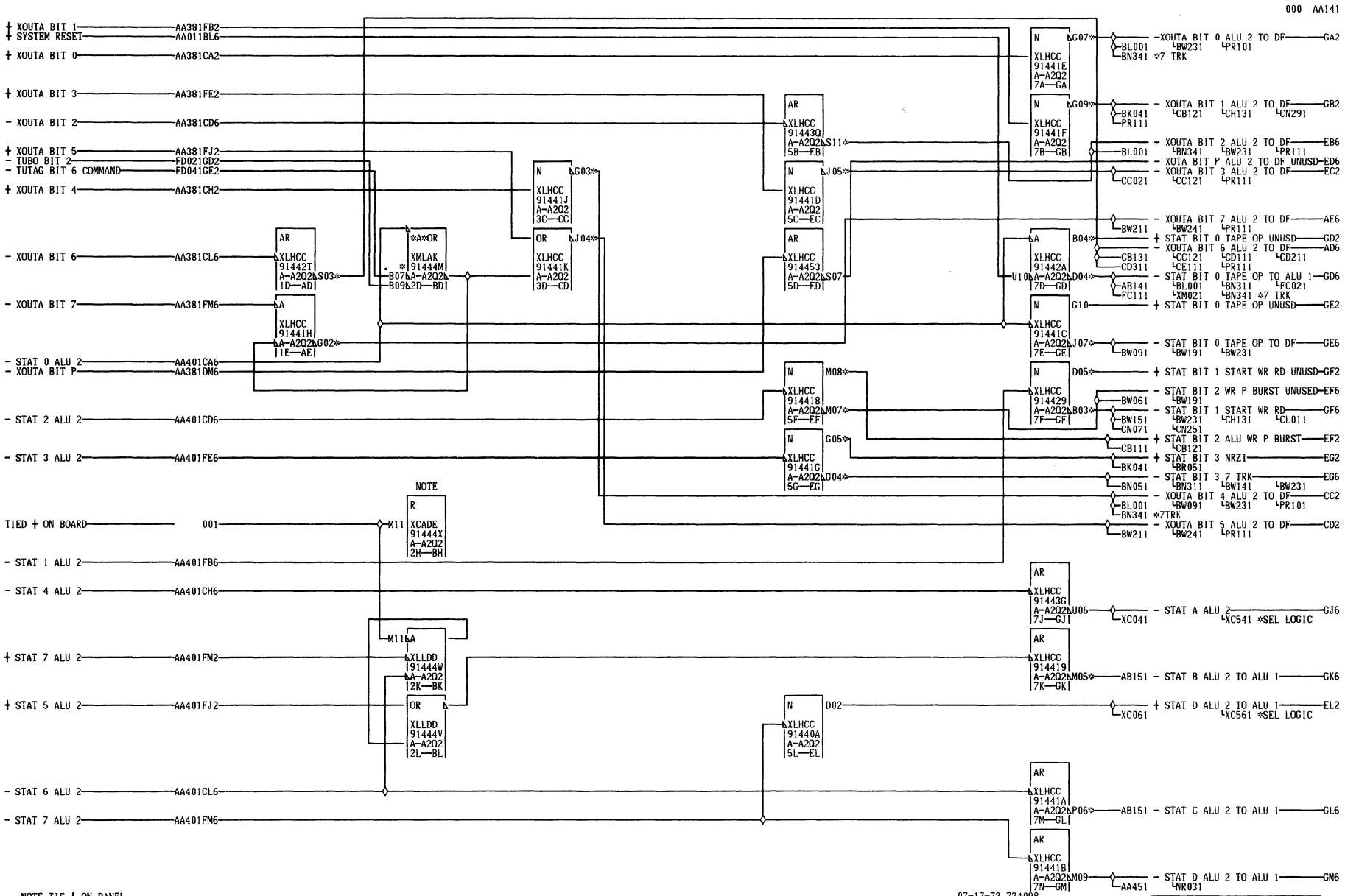
000 AA141
+ XOUTA BIT 1 AA381FB2
+ SYSTEM RESET AA011BL6
+ XOUTA BIT 0 AA381CA2
+ XOUTA BIT 3 AA381FE2
- XOUTA BIT 2 AA381CD6
+ XOUTA BIT 5 AA381FJ2
- TUBO BIT 2 FD021GD2
- TUTAG BIT 6 COMMAND FD041GE2
+ XOUTA BIT 4 AA381CH2
- XOUTA BIT 6 AA381CL6
- XOUTA BIT 7 AA381FM6
- STAT 0 ALU 2 AA401CA6
- XOUTA BIT P AA381DM6
- STAT 2 ALU 2 AA401CD6
- STAT 3 ALU 2 AA401FE6
TIED + ON BOARD 001
- STAT 1 ALU 2 AA401FB6
- STAT 4 ALU 2 AA401CH6
+ STAT 7 ALU 2 AA401FM2
+ STAT 5 ALU 2 AA401FJ2
- STAT 6 ALU 2 AA401CL6
- STAT 7 ALU 2 AA401FM6
NOTE
XCADE 91444X A-A2Q2 2H—BH
XLLDD 91444W A-A2Q2 2K—BK
XLLDD 91444V A-A2Q2 2L—BL
XLHCC 91442T A-A2Q2 1D—AD
XLHCC 91441H A-A2Q2 1E—AE
XMLAK 91444M
XLHCC 91441K A-A2Q2 3D—CD
XLHCC 91441J A-A2Q2 3C—CC
XLHCC 91443Q A-A2Q2 5B—EB
XLHCC 91441D A-A2Q2 5C—EC
XLHCC 914453 A-A2Q2 5D—ED
XLHCC 914418 A-A2Q2 5F—EF
XLHCC 91441G A-A2Q2 5G—EG
XLHCC 91440A A-A2Q2 5L—EL
XLHCC 91441E A-A2Q2 7A—GA
XLHCC 91441F A-A2Q2 7B—GB
XLHCC 91442A A-A2Q2 7D—GD
XLHCC 914429 A-A2Q2 7F—GF
XLHCC 91441C A-A2Q2 7E—GE
XLHCC 91443G A-A2Q2 7J—GJ
XLHCC 914419 A-A2Q2 7K—GK
XLHCC 91441A A-A2Q2 7M—GL
XLHCC 91441B A-A2Q2 7N—GM
- XOUTA BIT 0 ALU 2 TO DF GA2
BL001 BW231 PR101
BN341 *7 TRK
- XOUTA BIT 1 ALU 2 TO DF GB2
BK041 CB121 CH131 CN291
PR111
- XOUTA BIT 2 ALU 2 TO DF EB6
BL001 BN341 BW231 PR111
- XOTA BIT P ALU 2 TO DF UNUSD ED6
- XOUTA BIT 3 ALU 2 TO DF EC2
CC021 CC121 PR111
- XOUTA BIT 7 ALU 2 TO DF AE6
BW211 BW241 PR111
+ STAT BIT 0 TAPE OP UNUSD GD2
- XOUTA BIT 6 ALU 2 TO DF AD6
CB131 CC121 CD111 CD211
CD311 CE111 PR111
- STAT BIT 0 TAPE OP TO ALU 1 GD6
AB141 BL001 BN311 FC021
FC111 XM021 BN341 *7 TRK
+ STAT BIT 0 TAPE OP UNUSD GE2
- STAT BIT 0 TAPE OP TO DF GE6
BW091 BW191 BW231
+ STAT BIT 1 START WR RD UNUSD GF2
- STAT BIT 2 WR P BURST UNUSED EF6
BW061 BW191
- STAT BIT 1 START WR RD GF6
BW151 BW231 CH131 CL011
CN071 CN251
+ STAT BIT 2 ALU WR P BURST EF2
CB111 CB121
+ STAT BIT 3 NRZI EG2
BK041 BR051
- STAT BIT 3 7 TRK EG6
BN051 BN311 BW141 BW231
- XOUTA BIT 4 ALU 2 TO DF CC2
BL001 BW091 BW231 PR101
BN341 *7TRK
- XOUTA BIT 5 ALU 2 TO DF CD2
BW211 BW241 PR111
- STAT A ALU 2 GJ6
XC041 XC541 *SEL LOGIC
- STAT B ALU 2 TO ALU 1 GK6
AB151
+ STAT D ALU 2 TO ALU 1 EL2
XC061 XC561 *SEL LOGIC
- STAT C ALU 2 TO ALU 1 GL6
AB151
- STAT D ALU 2 TO ALU 1 GM6
AA451 NR031
07-17-73 734098
NOTE TIE + ON PANEL WITH P/N 2520936
A FROM Q2M11 TO Q2P08
AD6 A-A2J1E11 01A-A1J6D02 01A-A1F1B11 01A-A1C6E04 GD6 A-A2V4B13 01A-A1J6B04
01A-A1J6E02 EB6 A-A2H1E11 01X-Y1U6C02 GB2 A-A2N1E13 01A-B2A4B13 01A-A1B5D02
01A-A1B4D10 01A-A1H6E02 EF6 A-A2V1B11 01A-A1N6E04 01A-B2F1B11 01X-Y1V5D02
01X-Y1V4D10 EC2 A-A2J1A11 01A-A1V1B11 01A-A2N1E13 01A-A1R1B11 GK6 A-A2V2B08
AE6 A-A2K1B11 01A-A1J6A02 EG2 A-A2K1A13 01A-A1N6E04 GE6 A-A2H1D13 01A-B2A2B08
01A-A1K6B02 01A-A1B4D06 01A-A1K6A04 01A-A1B4D03 01A-A1H6D04 GL6 A-A2V2B09
CC2 A-A2J1C11 01X-Y1V4D06 EG6 A-A2K1B13 01X-Y1V4D03 GF2 A-A2H1E13 01A-B2A2B09
01A-A1J6C02 EF2 A-A2J1C13 01A-A1K6B04 GD2 A-A2H1A13 01A-A1H6E04
CD2 A-A2J1D11 01A-A1J6C04 GA2 A-A2C1E13 01A-A1H6A04 GF6 A-A2J1B13
CONDITION BRANCHES ALU TO ALU
ALU 2
DATE 08-08-73 MACH. 3803-2
LOG 0051 FRAME 01
P.N. 2736142
IBM CORP. SDD BLK. GN
000

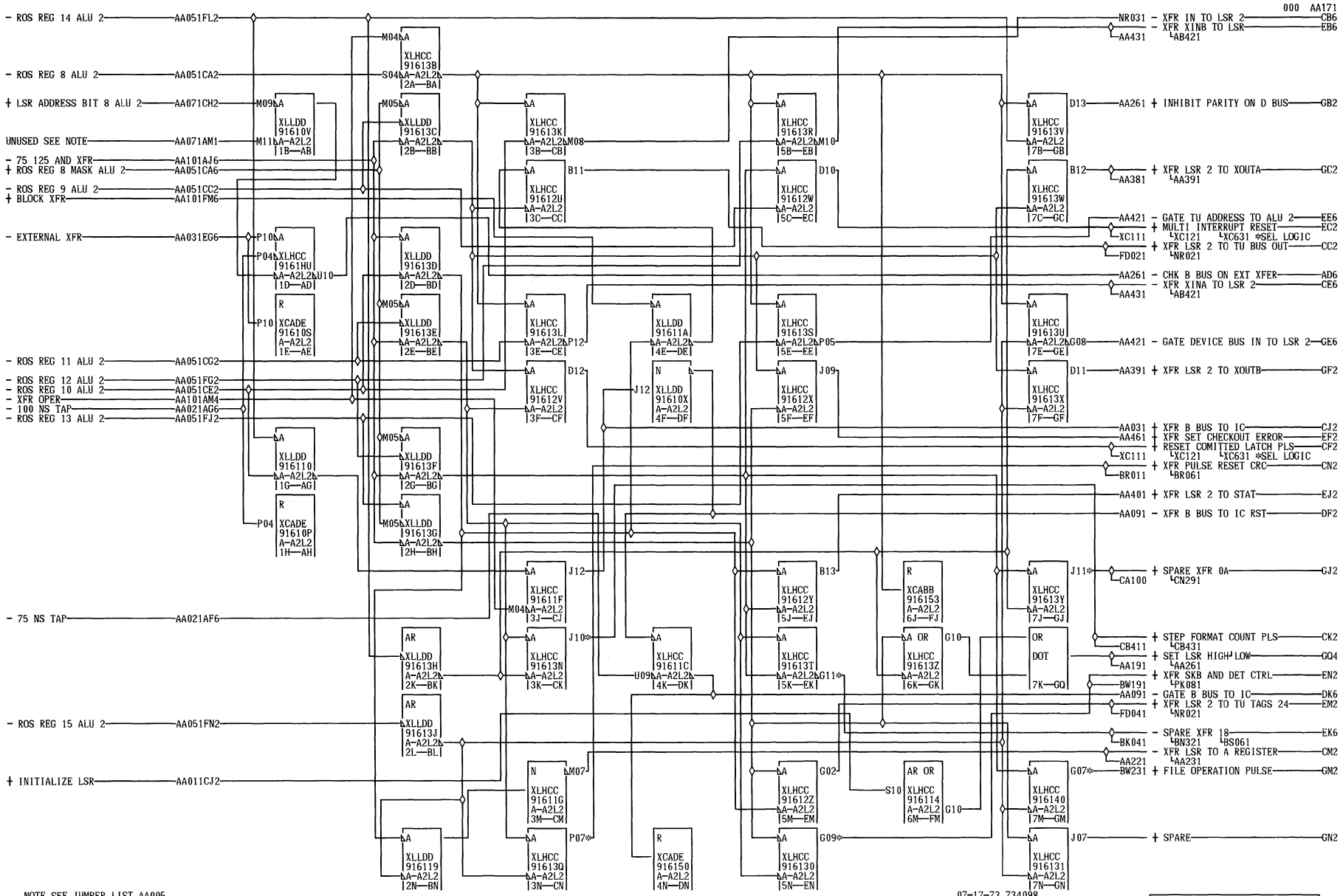
000 AA171
- ROS REG 14 ALU 2 AA051FL2
- ROS REG 8 ALU 2 AA051CA2
+ LSR ADDRESS BIT 8 ALU 2 AA071CH2
UNUSED SEE NOTE AA071AM1
- 75 125 AND XFR AA101AJ6
+ ROS REG 8 MASK ALU 2 AA051CA6
- ROS REG 9 ALU 2 AA051CC2
+ BLOCK XFR AA101FM6
- EXTERNAL XFR AA031EG6
- ROS REG 11 ALU 2 AA051CG2
- ROS REG 12 ALU 2 AA051FG2
- ROS REG 10 ALU 2 AA051CE2
- XFR OPER AA101AM4
- 100 NS TAP AA021AG6
- ROS REG 13 ALU 2 AA051FJ2
- 75 NS TAP AA021AF6
- ROS REG 15 ALU 2 AA051FN2
+ INITIALIZE LSR AA011CJ2
NR031 - XFR IN TO LSR 2 CB6
AA431 - XFR XINB TO LSR EB6
AB421
D13 AA261 + INHIBIT PARITY ON D BUS GB2
B12 AA381 + XFR LSR 2 TO XOUTA GC2
AA391
AA421 - GATE TU ADDRESS TO ALU 2 EE6
XC111 + MULTI INTERRUPT RESET EC2
XC121 XC631 *SEL LOGIC
FD021 + XFR LSR 2 TO TU BUS OUT CC2
NR021
AA261 - CHK B BUS ON EXT XFER AD6
AA431 - XFR XINA TO LSR 2 CE6
AB421
G08 AA421 - GATE DEVICE BUS IN TO LSR 2 GE6
D11 AA391 + XFR LSR 2 TO XOUTB GF2
AA031 + XFR B BUS TO IC CJ2
AA461 + XFR SET CHECKOUT ERROR EF2
XC111 + RESET COMITTED LATCH PLS CF2
XC121 XC631 *SEL LOGIC
BR011 + XFR PULSE RESET CRC CN2
BR061
AA401 + XFR LSR 2 TO STAT EJ2
AA091 - XFR B BUS TO IC RST DF2
J11* CA100 + SPARE XFR 0A GJ2
CN291
CB411 + STEP FORMAT COUNT PLS CK2
CB431
AA191 + SET LSR HIGH LOW GQ4
AA261
BW191 + XFR SKB AND DET CTRL EN2
PK081
AA091 - GATE B BUS TO IC DK6
FD041 + XFR LSR 2 TO TU TAGS 24 EM2
NR021
BK041 - SPARE XFR 18 EK6
BN321 BS061
AA221 - XFR LSR TO A REGISTER CM2
AA231
G07* BW231 + FILE OPERATION PULSE GM2
J07 + SPARE GN2
XLHCC 91613B
XLLDD 91610V
XLLDD 91613C
XLHCC 91613K
XLHCC 91613R
XLHCC 91613V
XLHCC 91612U
XLHCC 91612W
XLHCC 91613W
XLLDD 91613D
XLHCC 9161HU
XCADE 91610S
XLHCC 91613L
XLLDD 91611A
XLHCC 91613S
XLHCC 91613U
XLLDD 91613E
XLHCC 91612V
XLLDD 91610X
XLHCC 91612X
XLHCC 91613X
XLLDD 916110
XLLDD 91613F
XCADE 91610P
XLLDD 91613G
XLHCC 91611F
XLHCC 91612Y
XCABB 916153
XLHCC 91613Y
XLHCC 91613N
XLHCC 91611C
XLHCC 91613T
XLHCC 91613Z
XLLDD 91613H
XLLDD 91613J
XLLDD 916119
XLHCC 91611G
XLHCC 91612Z
XLHCC 916114
XLHCC 916140
XLHCC 91613Q
XCADE 916150
XLHCC 916130
XLHCC 916131
07-17-73 734098
NOTE SEE JUMPER LIST AA005
CK2 A-A2C2B10 01A-A1F6D02
01A-A1A3B10 GJ2 A-A2T1D11
01A-A1F1C11 01A-A1T1D11
01X-Y1U6D02 01A-A1E1D11
CN2 A-A2U1D11 01X-Y1T6E02
01A-A1U1D11 GM2 A-A2B2B05
EK6 A-A2H1B11 01A-A1A5B05
01A-A1H6B02
EN2 A-A2F1D11
TRANSFER DECODE
DATE 08-08-73 MACH. 3803-2
LOG 0051 FRAME 01
P.N. 2736143
IBM CORP. SDD BLK. GR
A A 1 7 1 000

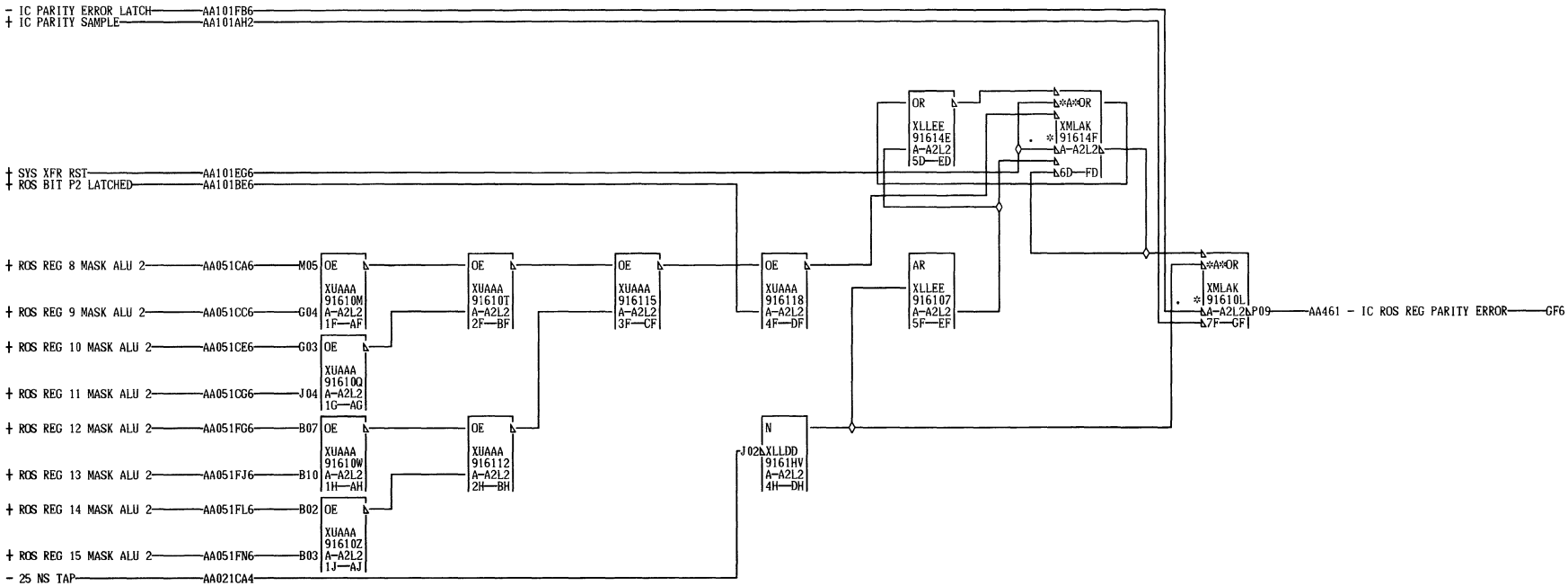

07-17-73 734098

TRANSFER PARITY CHECK ALU 2			
DATE 08-18-81	MACH. 3803-2		
LOG 0051	FRAME	01	
	P.N. 2736144		
IBM CORP.	BLK.	GJ	

A A 1 8 1 000

A A 1 8 1 000

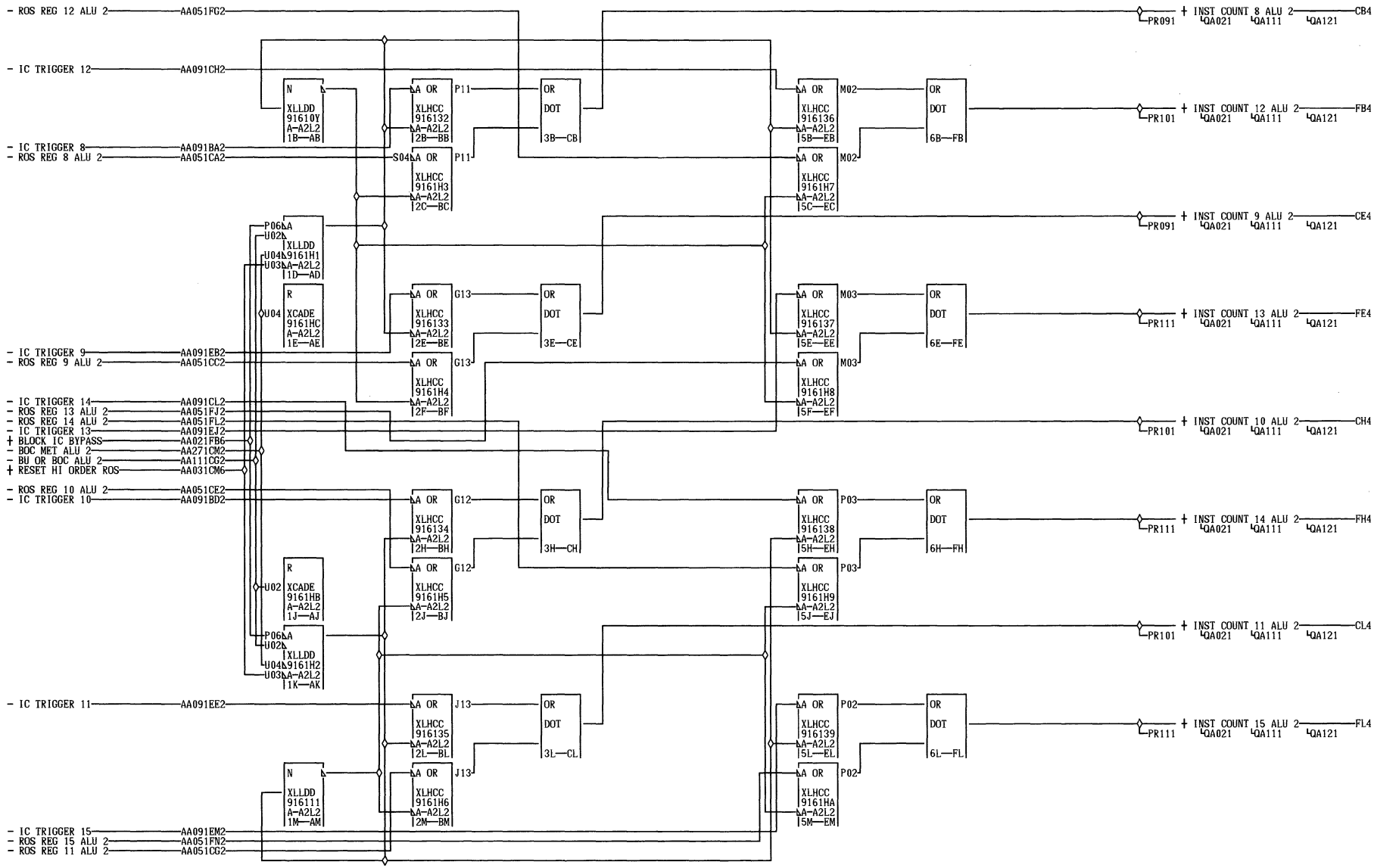

07-17-73 734098
04-22-74 734877

INSTRUCTION COUNT GATING ALU 2	
DATE 05-06-74 MACH. 3803-2	
LOG 0J14 FRAME 01	
P.N. 2736145	
IBM CORP. BLK. FM	

A A 1 8 5 000

A A 1 8 5 000

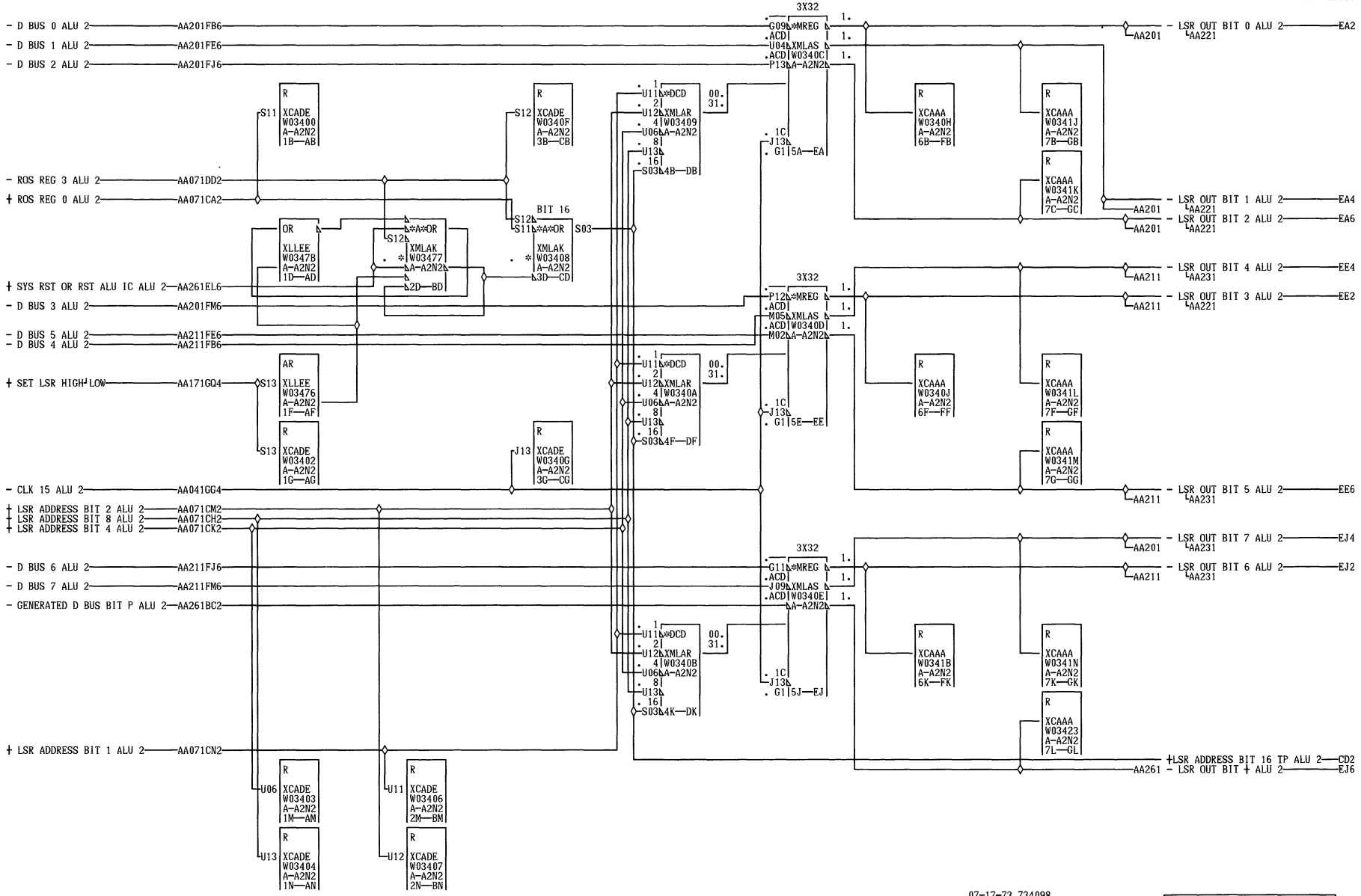
- D BUS 0 ALU 2 AA201FB6
- D BUS 1 ALU 2 AA201FE6
- D BUS 2 ALU 2 AA201FJ6
- ROS REG 3 ALU 2 AA071DD2
+ ROS REG 0 ALU 2 AA071CA2
+ SYS RST OR RST ALU IC ALU 2 AA261EL6
- D BUS 3 ALU 2 AA201FM6
- D BUS 5 ALU 2 AA211FE6
- D BUS 4 ALU 2 AA211FB6
+ SET LSR HIGH/LOW AA171GQ4
- CLK 15 ALU 2 AA041GG4
+ LSR ADDRESS BIT 2 ALU 2 AA071CM2
+ LSR ADDRESS BIT 8 ALU 2 AA071CH2
+ LSR ADDRESS BIT 4 ALU 2 AA071CK2
- D BUS 6 ALU 2 AA211FJ6
- D BUS 7 ALU 2 AA211FM6
- GENERATED D BUS BIT P ALU 2 AA261BC2
+ LSR ADDRESS BIT 1 ALU 2 AA071CN2
3X32
- LSR OUT BIT 0 ALU 2 EA2
- LSR OUT BIT 1 ALU 2 EA4
- LSR OUT BIT 2 ALU 2 EA6
- LSR OUT BIT 4 ALU 2 EE4
- LSR OUT BIT 3 ALU 2 EE2
- LSR OUT BIT 5 ALU 2 EE6
- LSR OUT BIT 7 ALU 2 EJ4
- LSR OUT BIT 6 ALU 2 EJ2
+LSR ADDRESS BIT 16 TP ALU 2 CD2
- LSR OUT BIT + ALU 2 EJ6
BIT 16
XCADE W03400 A-A2N2 1B—AB
XCADE W0340F A-A2N2 3B—CB
XLLEE W0347B A-A2N2 1D—AD
XMLAK W03477 A-A2N2 2D—BD
XMLAK W03408 A-A2N2 3D—CD
XLLEE W03476 A-A2N2 1F—AF
XCADE W03402 A-A2N2 1G—AG
XCADE W0340G A-A2N2 3G—CG
XCADE W03403 A-A2N2 1M—AM
XCADE W03404 A-A2N2 1N—AN
XCADE W03406 A-A2N2 2M—BM
XCADE W03407 A-A2N2 2N—BN
XMLAR W03409
XMLAR W0340A
XMLAR W0340B
XMLAR W0340C
XMLAR W0340D
XMLAR W0340E
XMLAS W0340H A-A2N2 6B—FB
XMLAS W0340J A-A2N2 7B—GB
XMLAS W0340K A-A2N2 7C—GC
XMLAS W0340L A-A2N2 6F—FF
XMLAS W0340M A-A2N2 7F—GF
XMLAS W0340N A-A2N2 7G—GG
XMLAS W0341B A-A2N2 6K—FK
XMLAS W0341N A-A2N2 7K—GK
XCAAA W03423 A-A2N2 7L—GL
07-17-73 734098
32 LSRS ALU 2
DATE 08-08-73 MACH. 3803-2
LOG 0051 FRAME 01
P.N. 2736146
IBM CORP. SDD BLK. GM

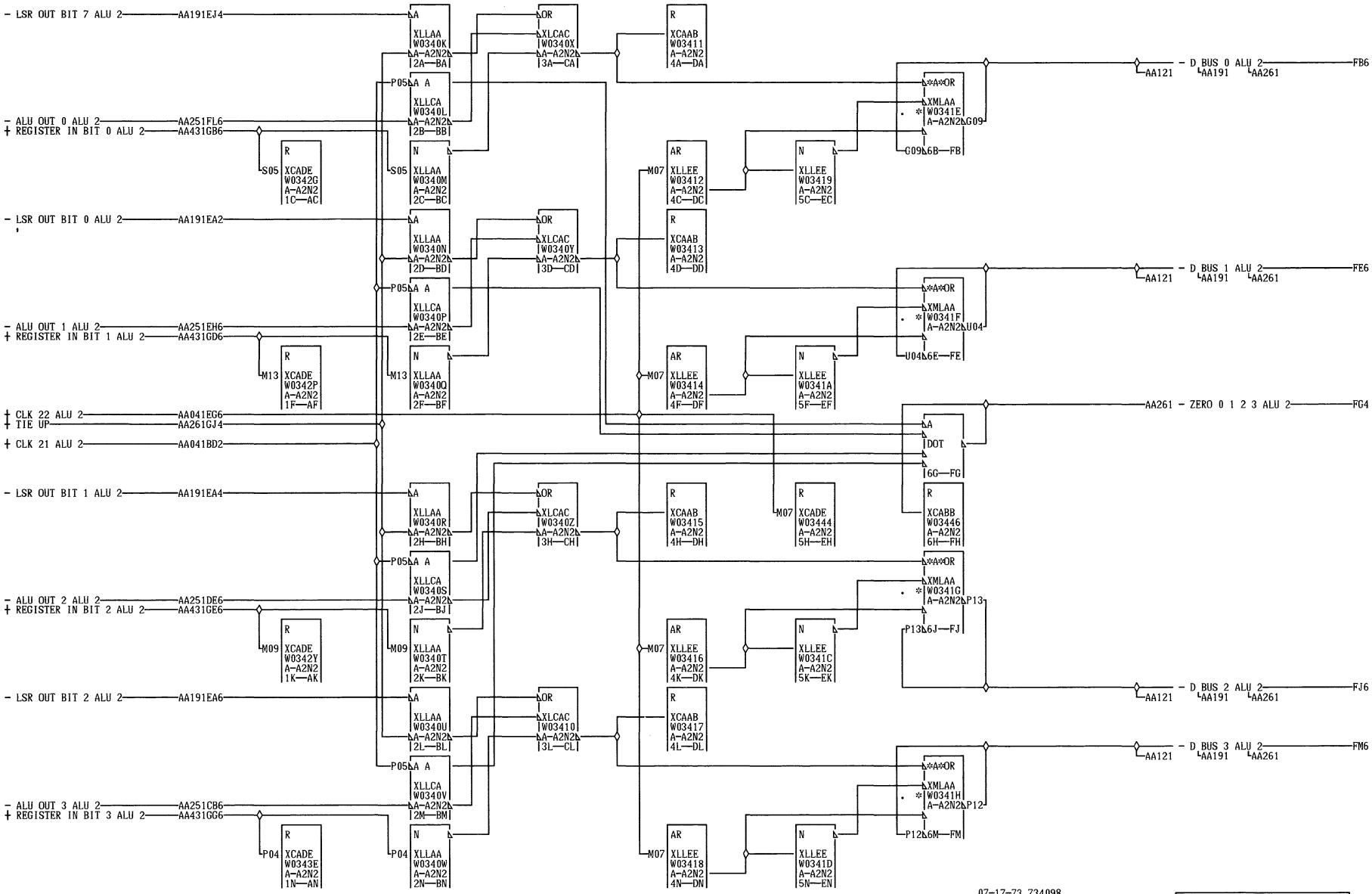

07-17-73 734098

ALU D BUS REG 0 1 2 3 ALU 2	
DATE 08-08-73 MACH. 3803-2	
LOG 0051 FRAME 01	
P.N. 2736147	
IBM CORP. SDD BLK. FN	

A A 2 0 1 000

A A 2 0 1 000

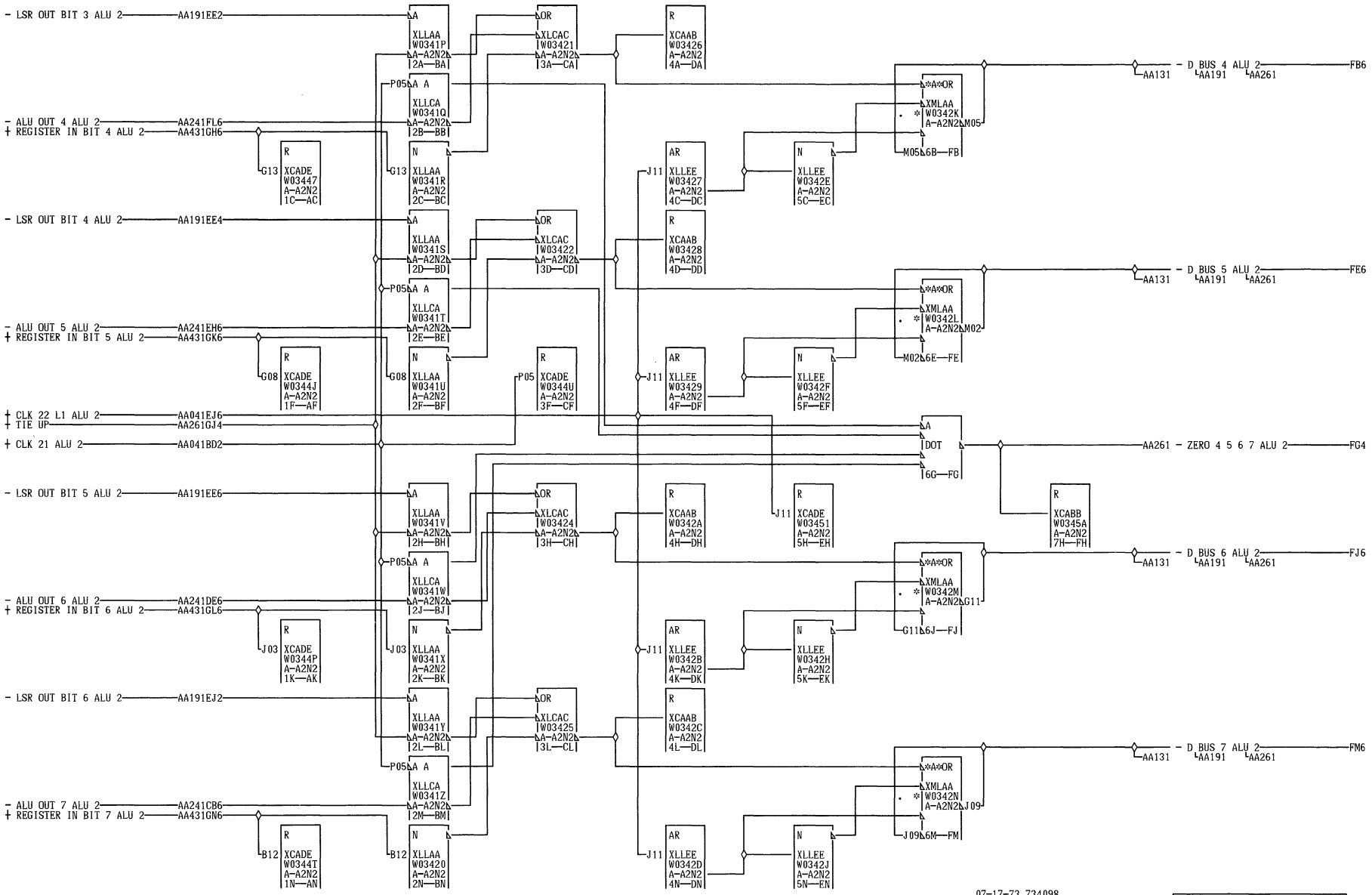

A A 2 1 1
000

ALU D BUS REG 4 5 6 7
ALU 2
DATE 08-08-73 MACH. 3803-2
LOG 0051 FRAME 01
P.N. 2736148
IBM CORP. SDD BLK. FN

A A 2 1 1
000

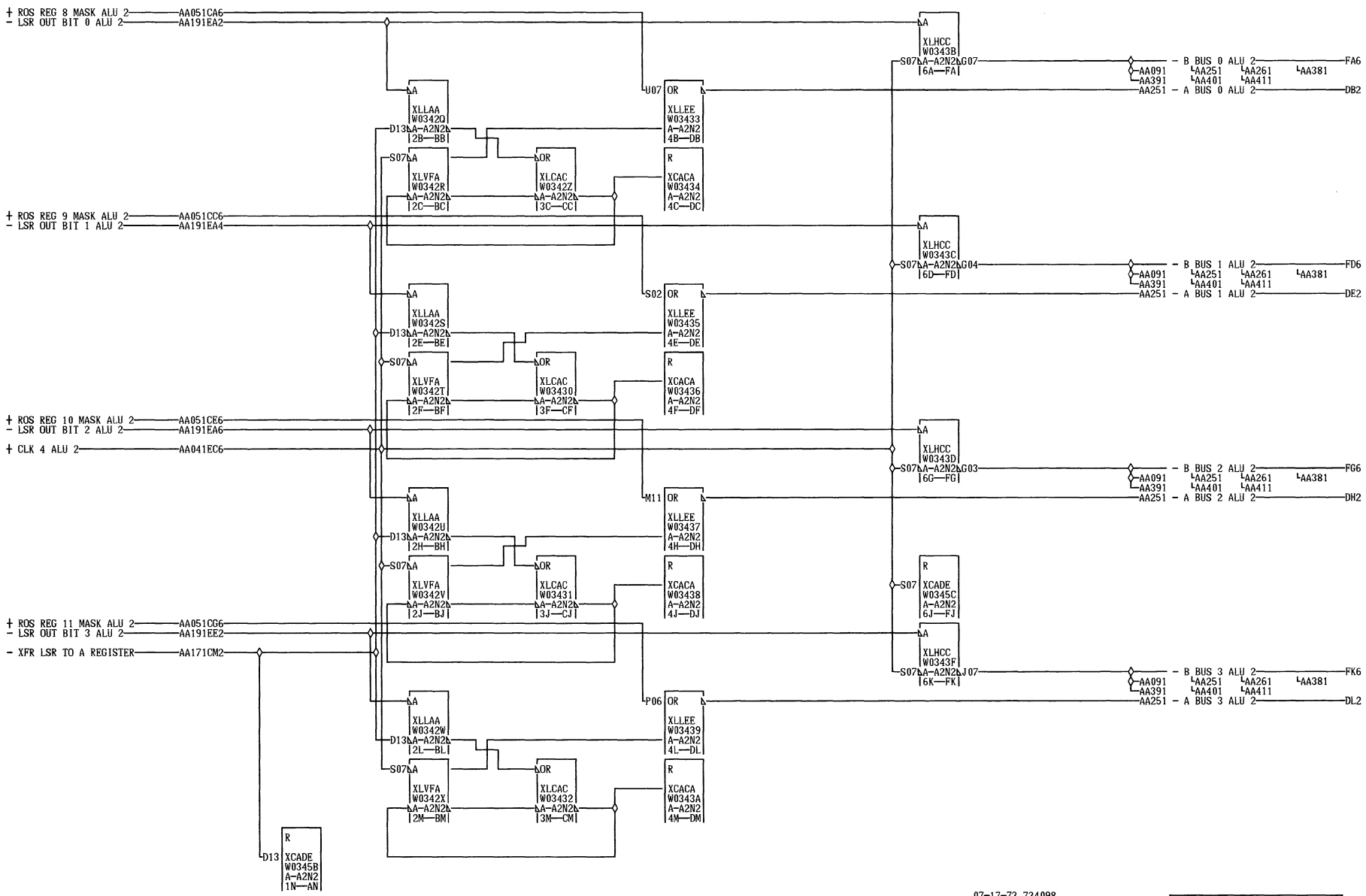

07-17-73 734098

A REG AND B REG 0 1 2 3 ALU 2		
DATE 08-08-73 MACH. 3803-2		
LOG 0051 FRAME 01		
P.N. 2736149		
IBM CORP. SDD BLK. FL		

A A 2 2 1 000

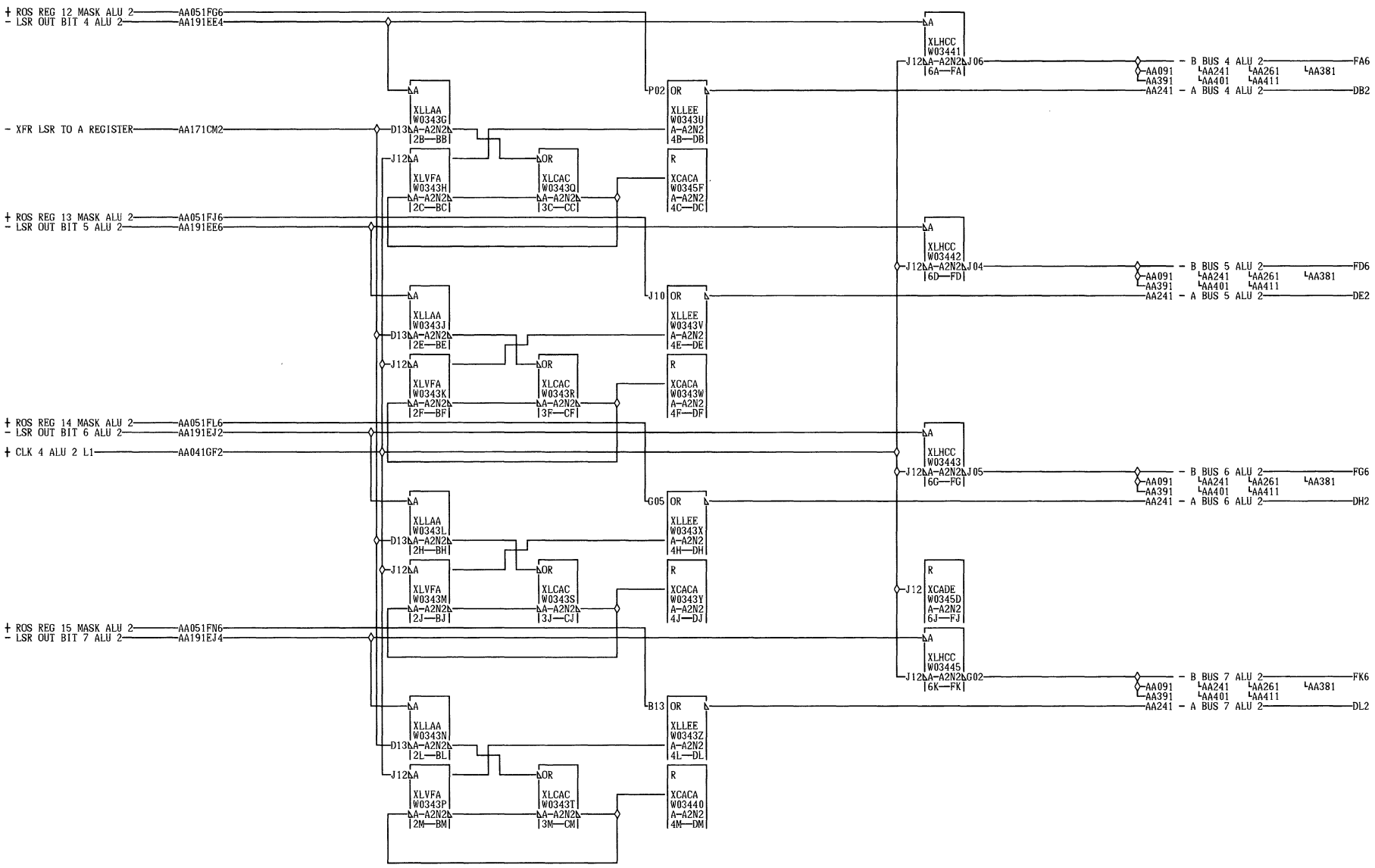

07-17-73 734098

A REG AND B REG 4 5 6 7 ALU 2		
DATE 08-08-73 MACH. 3803-2		
LOG 0051 FRAME 01		
P.N. 2736150		
IBM CORP. SDD BLK. FL		

A A 2 3 1 000

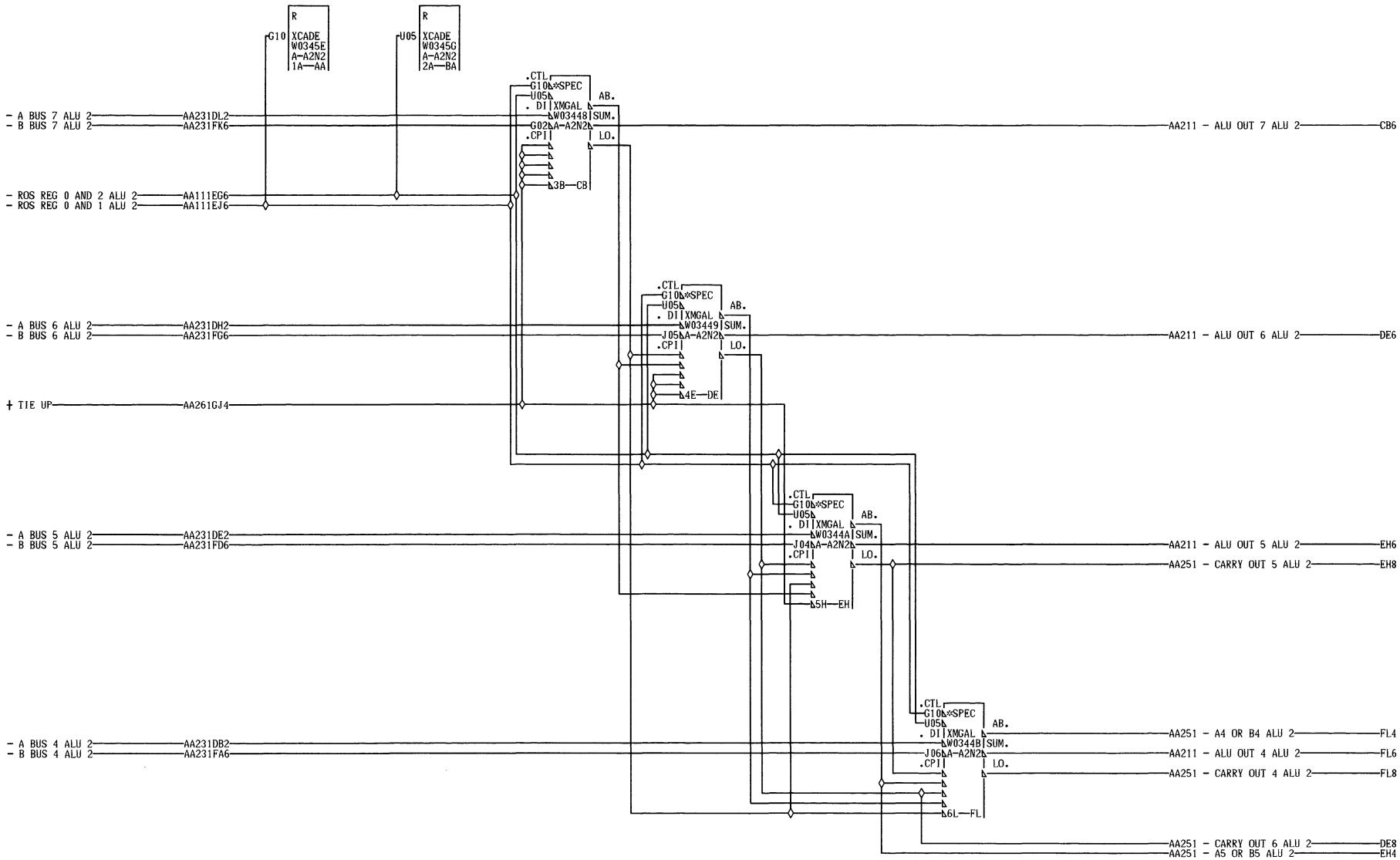

07-17-73 734098
12-06-73 734879

A A 2 4 1 000	ALU 7 THRU 4 ALU 2 DATE 01-11-74 MACH. 3803-2 LOG 0045 FRAME 01 P.N. 2736151 IBM CORP. SDD BLK. FM	A A 2 4 1 000

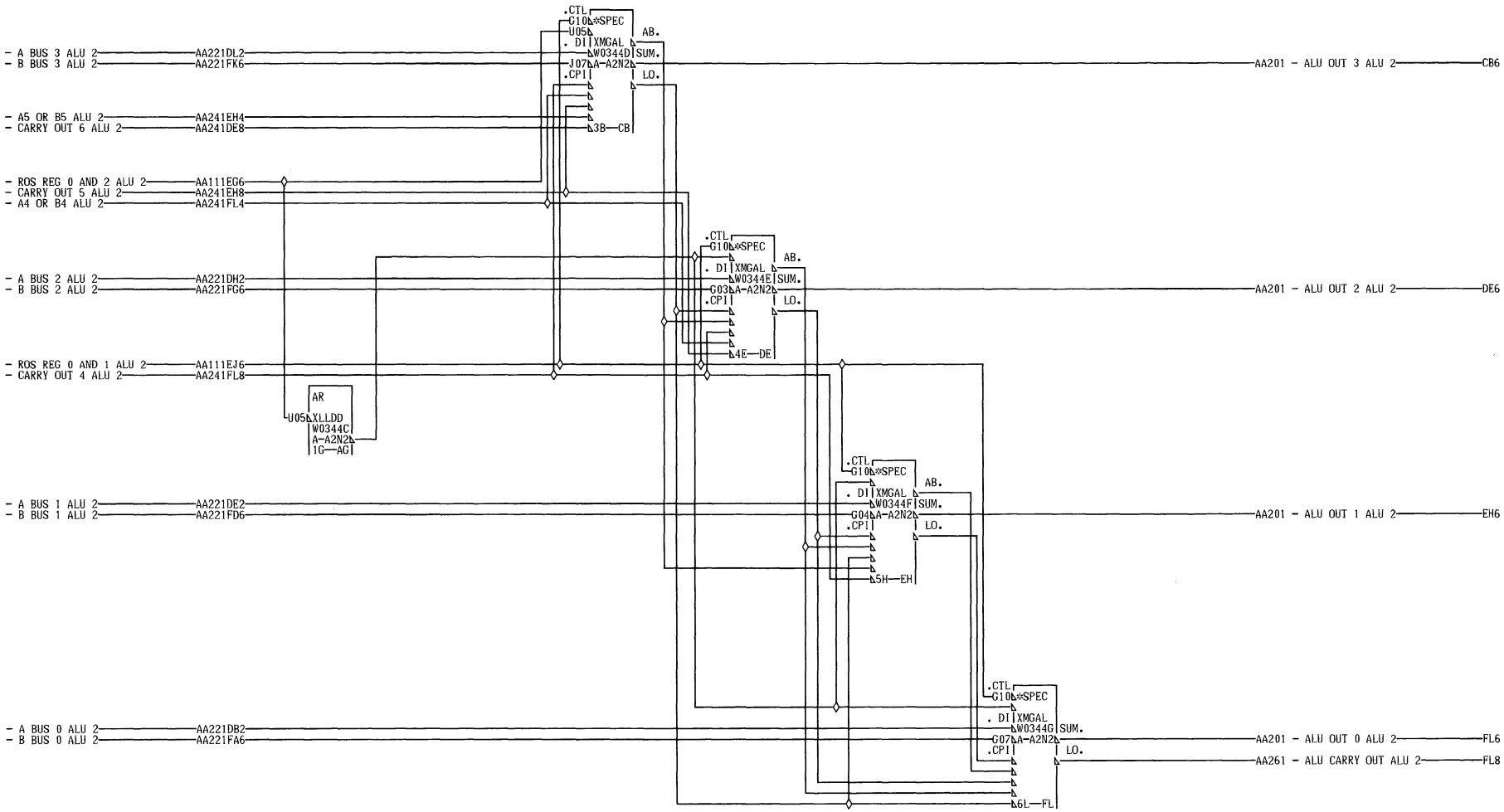

07-17-73 734098
12-06-73 734879

	ALU 3 THRU 0 ALU 2	
DATE	01-11-74 MACH. 3803-2	
LOG	0045 FRAME 01	
	P.N. 2736152	
IBM CORP.	SDD BLK. FM	

A A 2 5 1 000

A A 2 5 1 000

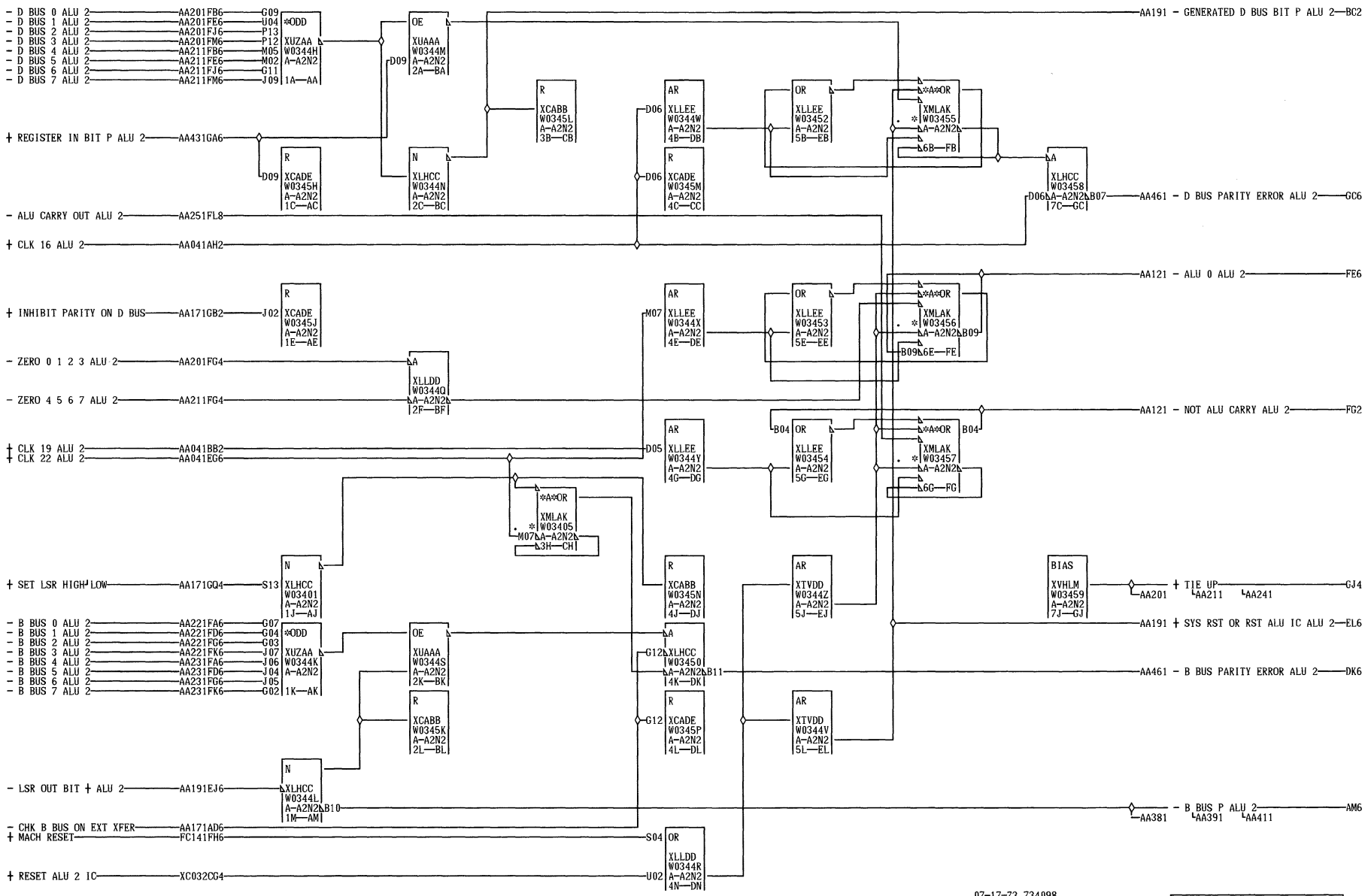

07-17-73 734098

D AND B BUS PARITY ERROR ALU 2			
DATE 08-08-73	MACH. 3803-2		
LOG 0051	FRAME	01	
	P.N. 2736153		
IBM CORP. SDD BLK.		GM	

AA261 000

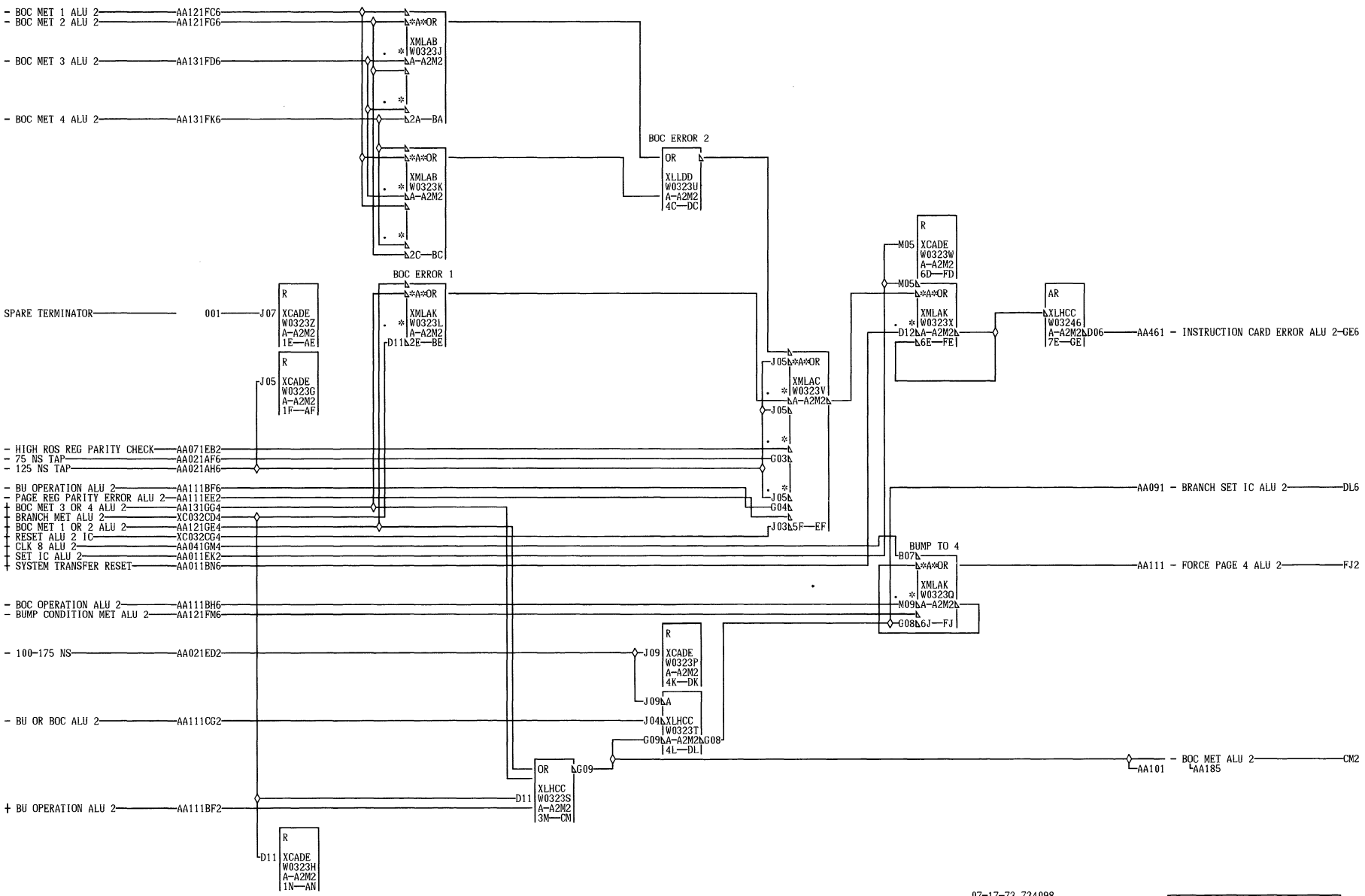

07-17-73 734098

INSTRUCTION CARD ERROR ALU 2			
DATE 08-08-73	MACH. 3803-2		
LOG 0051	FRAME	01	
	P.N. 2736154		
IBM CORP. SDD BLK.		GF	

A A 2 7 1 000

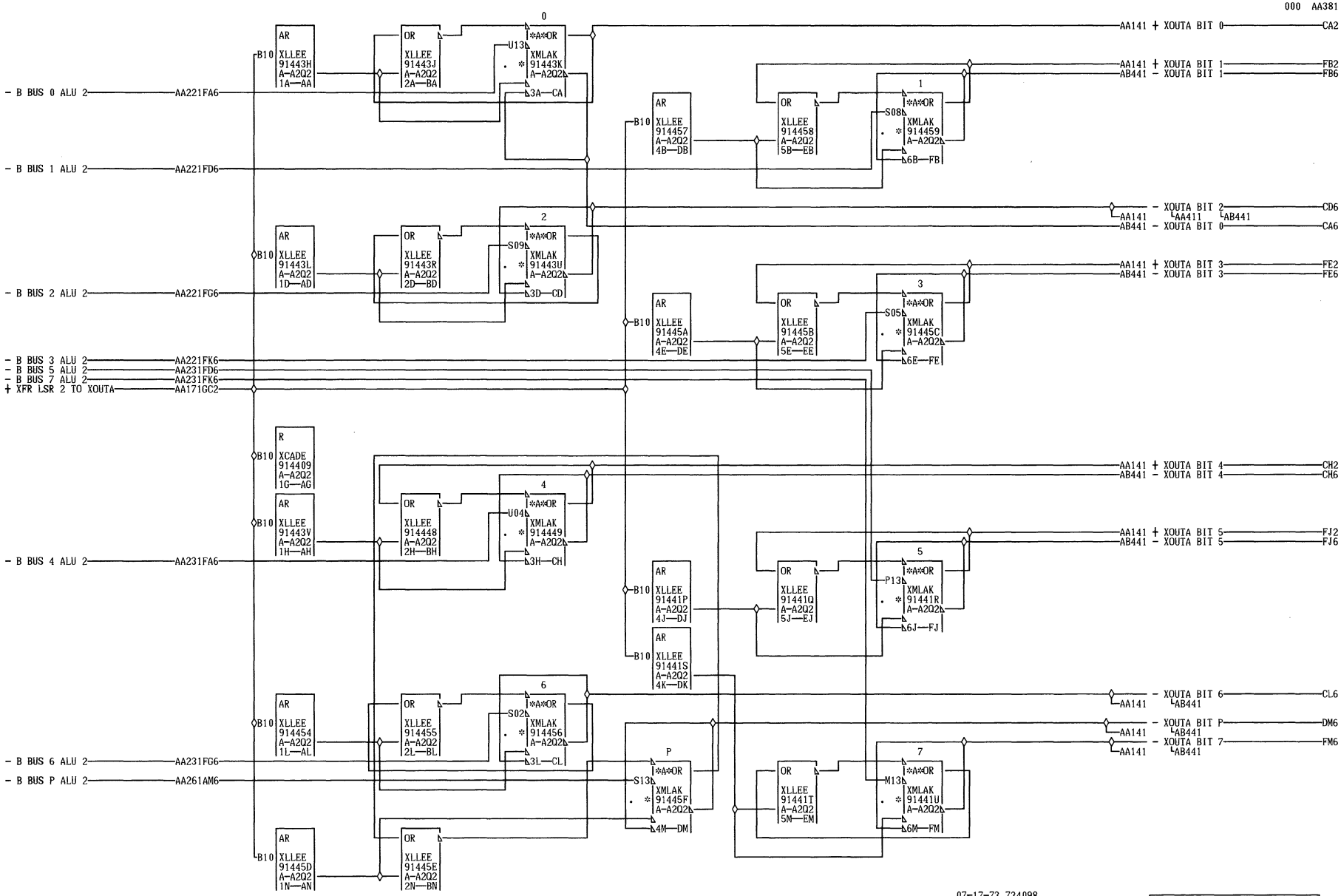

07-17-73 734098

CROSSOVER REG XOUTA ALU 2	
DATE 08-08-73 MACH. 3803-2	
LOG 0051 FRAME 01	
P.N. 2736155	
IBM CORP. SDD BLK. FN	

AA381 000

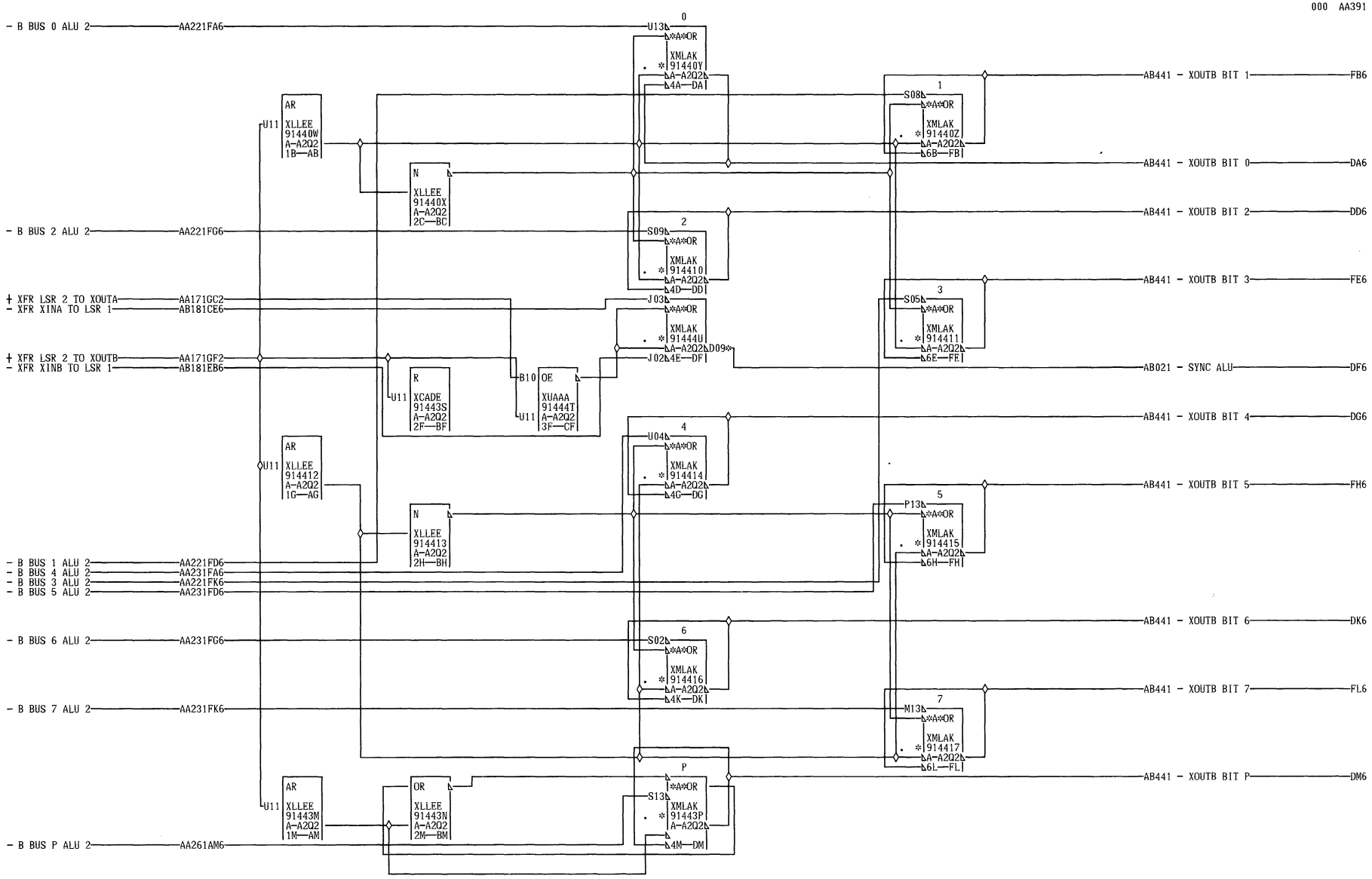

DF6 A-A2U5D10
01A-B2B5D10

07-17-73 734098

CROSSOVER REG XOUTB
ALU 2
DATE 08-08-73 MACH. 3803-2
LOG 0051 FRAME 01
P.N. 2736156
IBM CORP. SDD BLK. FM

A A391 000

A A391 000

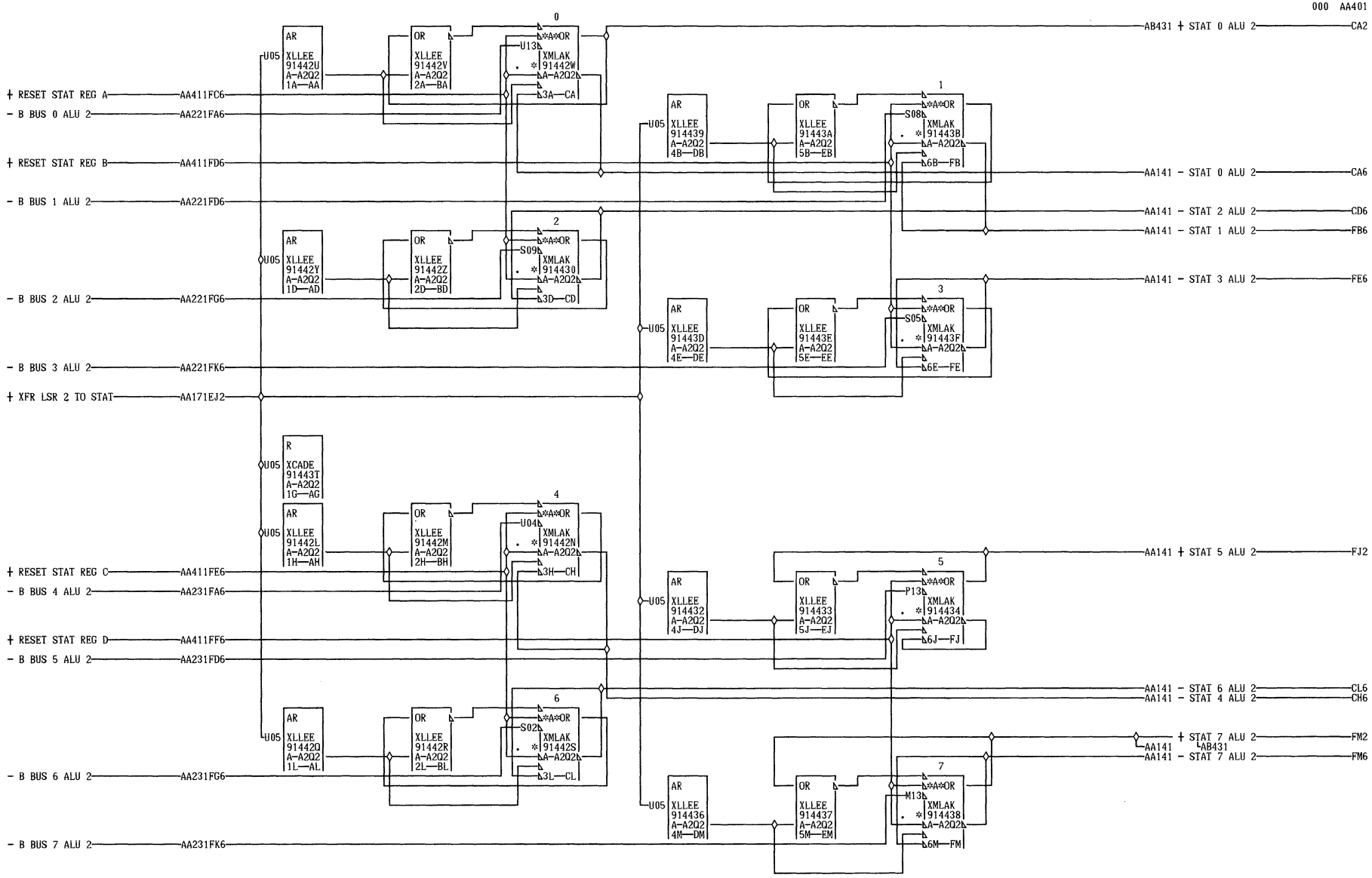

07-17-73 734098

STAT REGISTER ALU 2			
DATE	08-08-73	MACH. 3803-2	
LOG	0051	FRAME	01
		P.N.	2736157
IBM CORP.	SDD	BLK.	FN

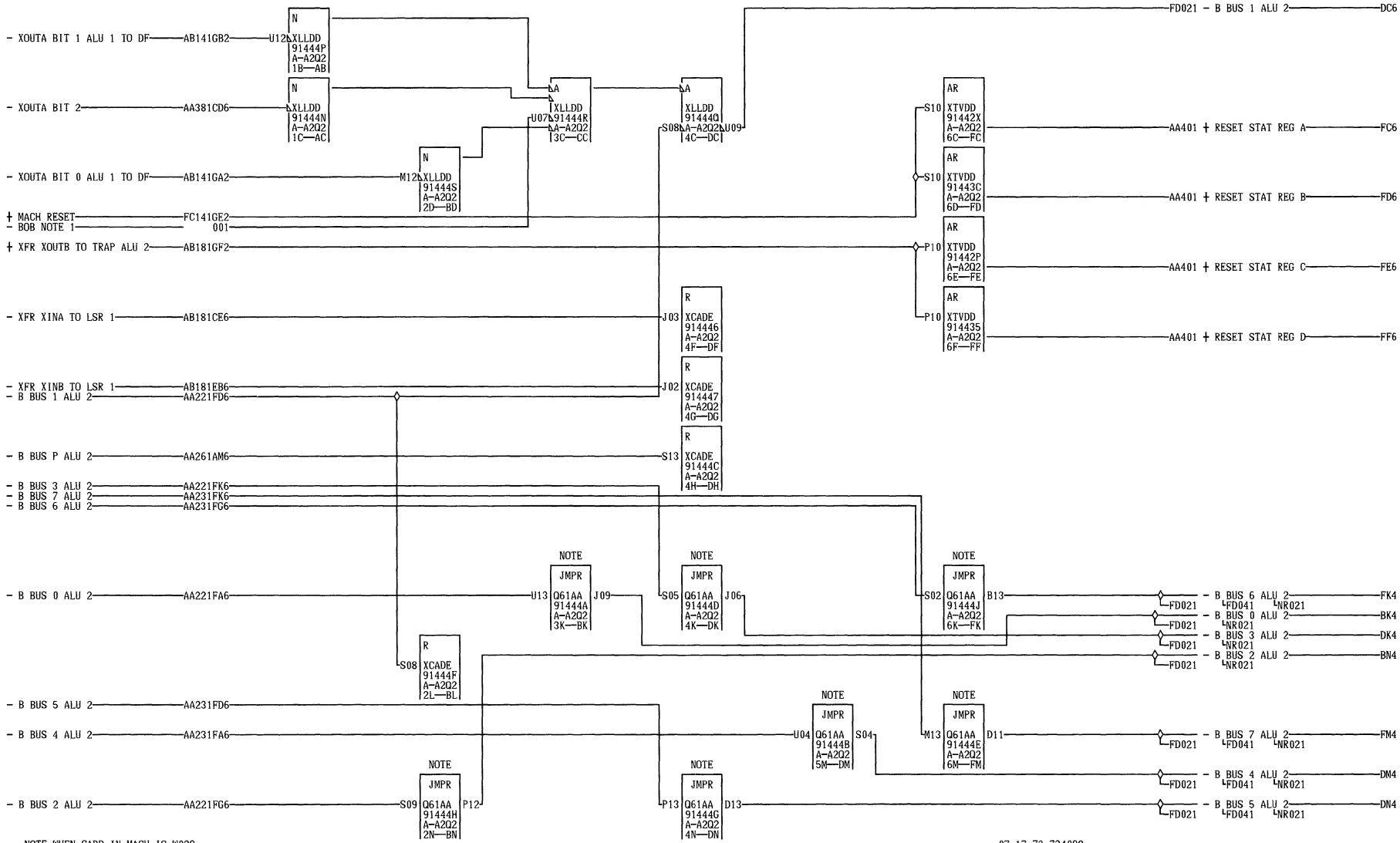

NOTE WHEN CARD IN MACH IS W029
LINES ENTERING THESE BLOCKS
A ARE TERMINATED AND JUMPER
A BLOCKS BECOME DRIVERS.
4 NOTE 1 TIE UP ON PANEL
1 WITH P/N 2520936 FROM
1 Q2U07 TO Q2U08

000

07-17-73 734098

RESETS ALU 2		A
DATE 08-08-73	MACH. 3803-2	A
LOG 0051	FRAME 01	4
	P.N. 2736158	1
IBM CORP. SDD BLK.	GN	1
		000

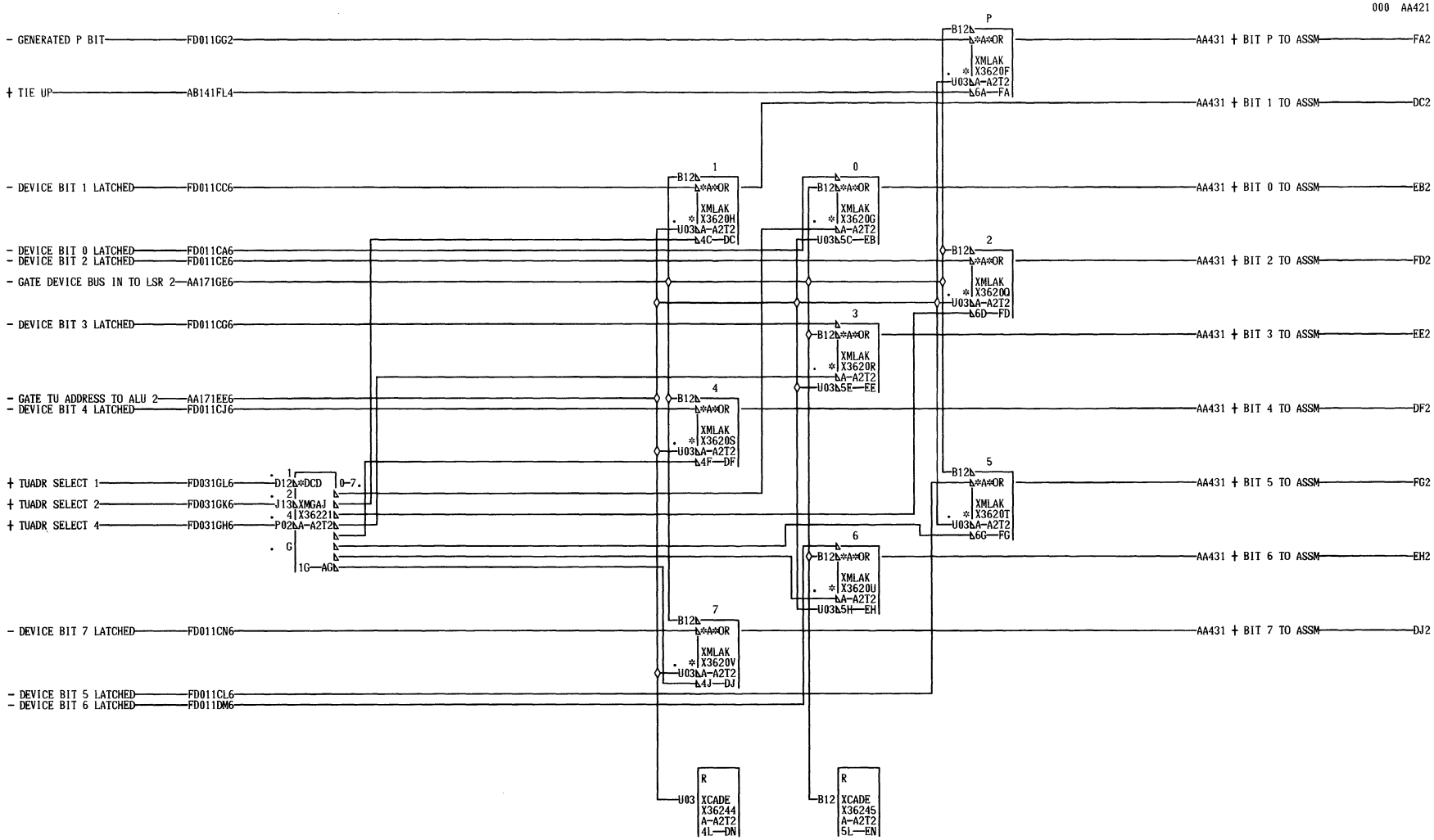

07-17-73 734098
12-06-73 734879

ASSEMBLER IN ALU 2		
DATE 08-18-81 MACH. 3803-2		AA421
LOG 0055 FRAME 01		
P.N. 2736159		000
IBM CORP. SDD BLK. FH		

AA421
000

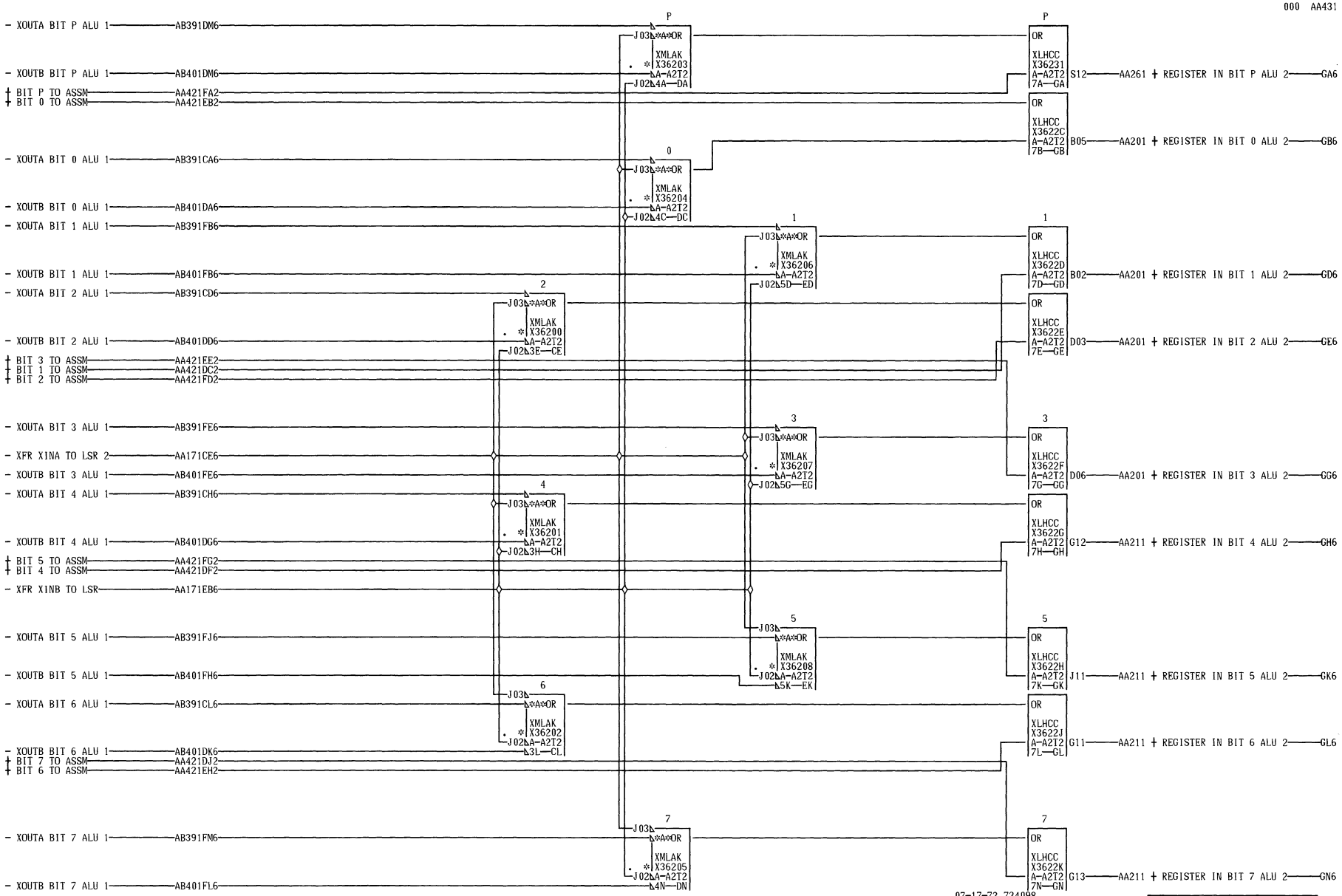
- XOUTA BIT P ALU 1 AB391DM6
- XOUTB BIT P ALU 1 AB401DM6
+ BIT P TO ASSM AA421FA2
+ BIT 0 TO ASSM AA421EB2
- XOUTA BIT 0 ALU 1 AB391CA6
- XOUTB BIT 0 ALU 1 AB401DA6
- XOUTA BIT 1 ALU 1 AB391FB6
- XOUTB BIT 1 ALU 1 AB401FB6
- XOUTA BIT 2 ALU 1 AB391CD6
- XOUTB BIT 2 ALU 1 AB401DD6
+ BIT 3 TO ASSM AA421EE2
+ BIT 1 TO ASSM AA421DC2
+ BIT 2 TO ASSM AA421FD2
- XOUTA BIT 3 ALU 1 AB391FE6
- XFR XINA TO LSR 2 AA171CE6
- XOUTB BIT 3 ALU 1 AB401FE6
- XOUTA BIT 4 ALU 1 AB391CH6
- XOUTB BIT 4 ALU 1 AB401DG6
+ BIT 5 TO ASSM AA421FG2
+ BIT 4 TO ASSM AA421DF2
- XFR XINB TO LSR AA171EB6
- XOUTA BIT 5 ALU 1 AB391FJ6
- XOUTB BIT 5 ALU 1 AB401FH6
- XOUTA BIT 6 ALU 1 AB391CL6
- XOUTB BIT 6 ALU 1 AB401DK6
+ BIT 7 TO ASSM AA421DJ2
+ BIT 6 TO ASSM AA421EH2
- XOUTA BIT 7 ALU 1 AB391FM6
- XOUTB BIT 7 ALU 1 AB401FL6
P
J03 *A*OR
XMLAK X36203
A-A2T2
J02 4A—DA
0
J03 *A*OR
XMLAK X36204
A-A2T2
J02 4C—DC
1
J03 *A*OR
XMLAK X36206
A-A2T2
J02 5D—ED
2
J03 *A*OR
XMLAK X36200
A-A2T2
J02 3E—CE
3
J03 *A*OR
XMLAK X36207
A-A2T2
J02 5G—EG
4
J03 *A*OR
XMLAK X36201
A-A2T2
J02 3H—CH
5
J03 *A*OR
XMLAK X36208
A-A2T2
5K—EK
6
J03 *A*OR
XMLAK X36202
A-A2T2
3L—CL
7
J03 *A*OR
XMLAK X36205
A-A2T2
4N—DN
P
OR
XLHCC X36231
A-A2T2 S12 AA261 + REGISTER IN BIT P ALU 2 GA6
7A—GA
OR
XLHCC X3622C
A-A2T2 B05 AA201 + REGISTER IN BIT 0 ALU 2 GB6
7B—GB
1
OR
XLHCC X3622D
A-A2T2 B02 AA201 + REGISTER IN BIT 1 ALU 2 GD6
7D—GD
OR
XLHCC X3622E
A-A2T2 D03 AA201 + REGISTER IN BIT 2 ALU 2 GE6
7E—GE
3
OR
XLHCC X3622F
A-A2T2 D06 AA201 + REGISTER IN BIT 3 ALU 2 GG6
7G—GG
OR
XLHCC X3622G
A-A2T2 G12 AA211 + REGISTER IN BIT 4 ALU 2 GH6
7H—GH
5
OR
XLHCC X3622H
A-A2T2 J11 AA211 + REGISTER IN BIT 5 ALU 2 GK6
7K—GK
OR
XLHCC X3622J
A-A2T2 G11 AA211 + REGISTER IN BIT 6 ALU 2 GL6
7L—GL
7
OR
XLHCC X3622K
A-A2T2 G13 AA211 + REGISTER IN BIT 7 ALU 2 GN6
7N—GN
07-17-73 734098
12-06-73 734879
ALU REGISTERS INPUT GATING
ALU 2
DATE 01-11-74 MACH. 3803-2
LOG 0055 FRAME 01
P.N. 2736160
IBM CORP. SDD BLK. GP
A A 4 3 1 000

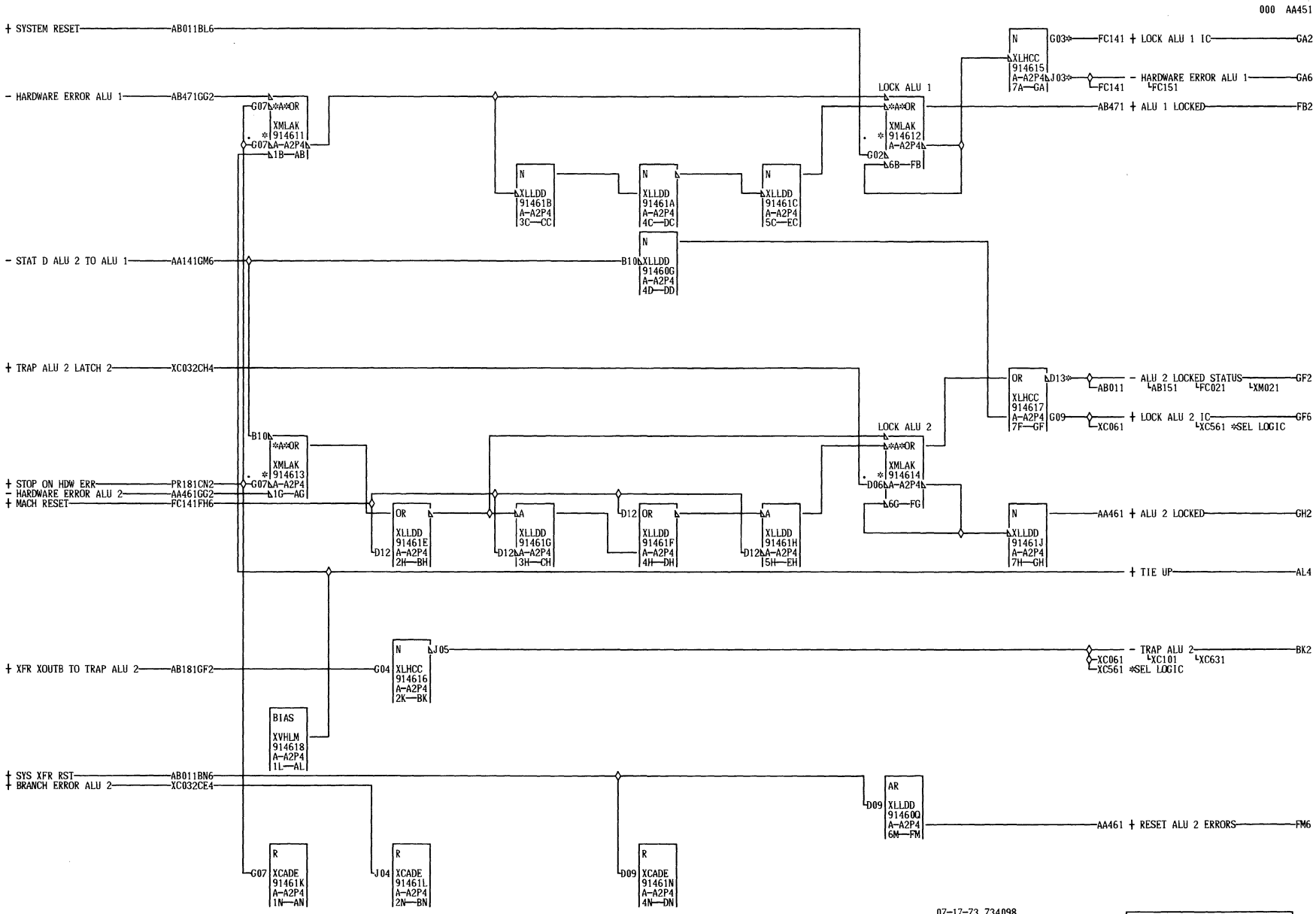

GA2 A-A2U2B06
01A-B2B2B06
GA6 A-A2U2B08
01A-B2B2B08
GF2 A-A2V4D09
01A-B2A4D09

07-17-73 734098

IC CONTROL ERRORS ALU 2	
DATE 08-18-81 MACH. 3803-2	
LOG 0051 FRAME 01	
P.N. 2736161	
IBM CORP. SDD BLK. GJ	

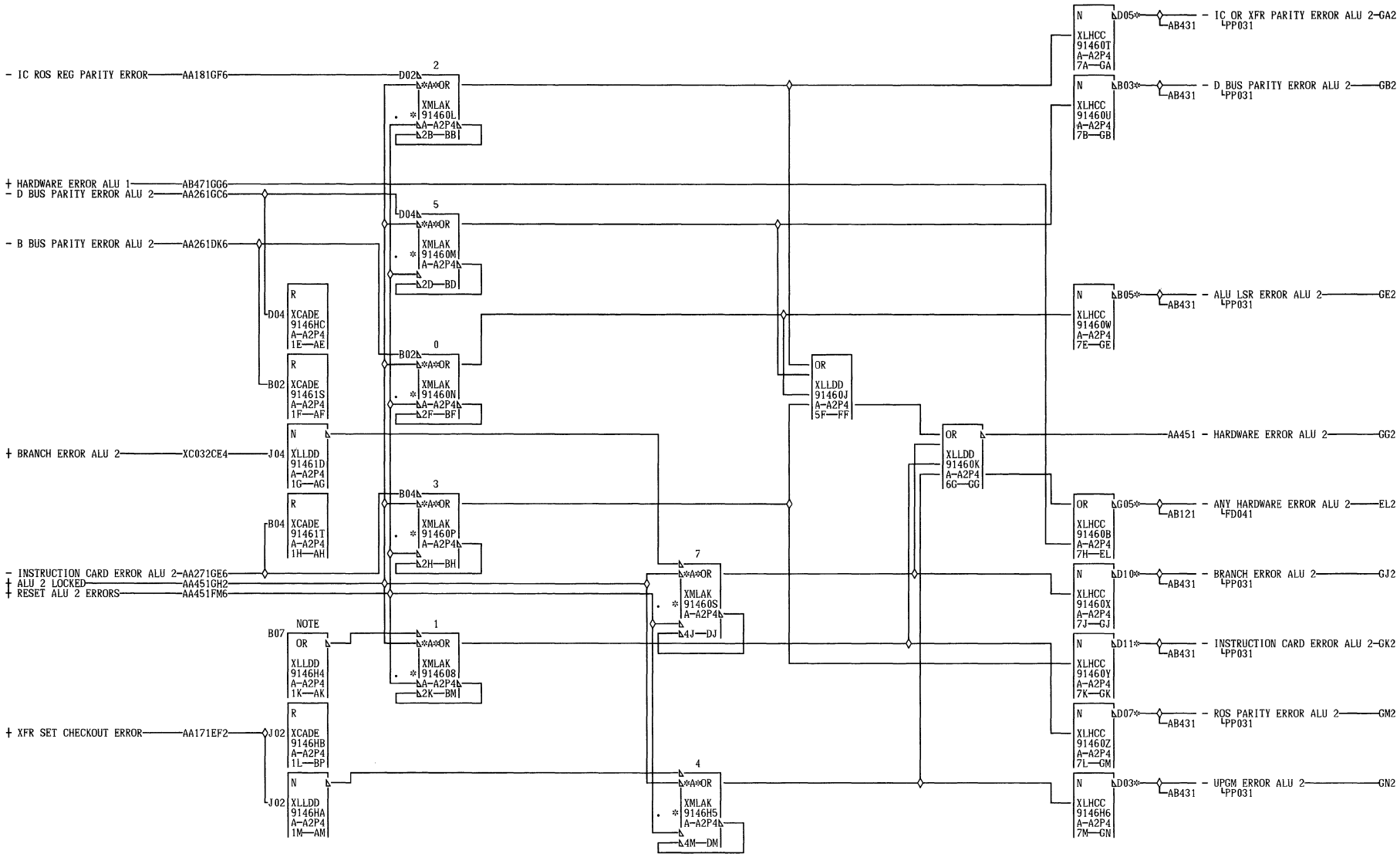

NOTE SEE JUMPER LIST AA005

EL2 A-A2U5B06 01A-A1A4B06
01A-B2B5B06 GK2 A-A2A2B08
GA2 A-A2A2B02 01A-A1A4B08
01A-A1A4B02 GM2 A-A2A2B09
GB2 A-A2A2B04 01A-A1A4B09
01A-A1A4B04 GN2 A-A2M1E13
GE2 A-A2A2B05 01A-A1M6E04
01A-A1A4B05
GJ2 A-A2A2B06

07-17-73 734098

HARDWARE ERROR LATCHES
ALU 2
DATE 08-08-73 MACH. 3803-2
LOG 0051 FRAME 01
P.N. 2736162
IBM CORP. SDD BLK. GP

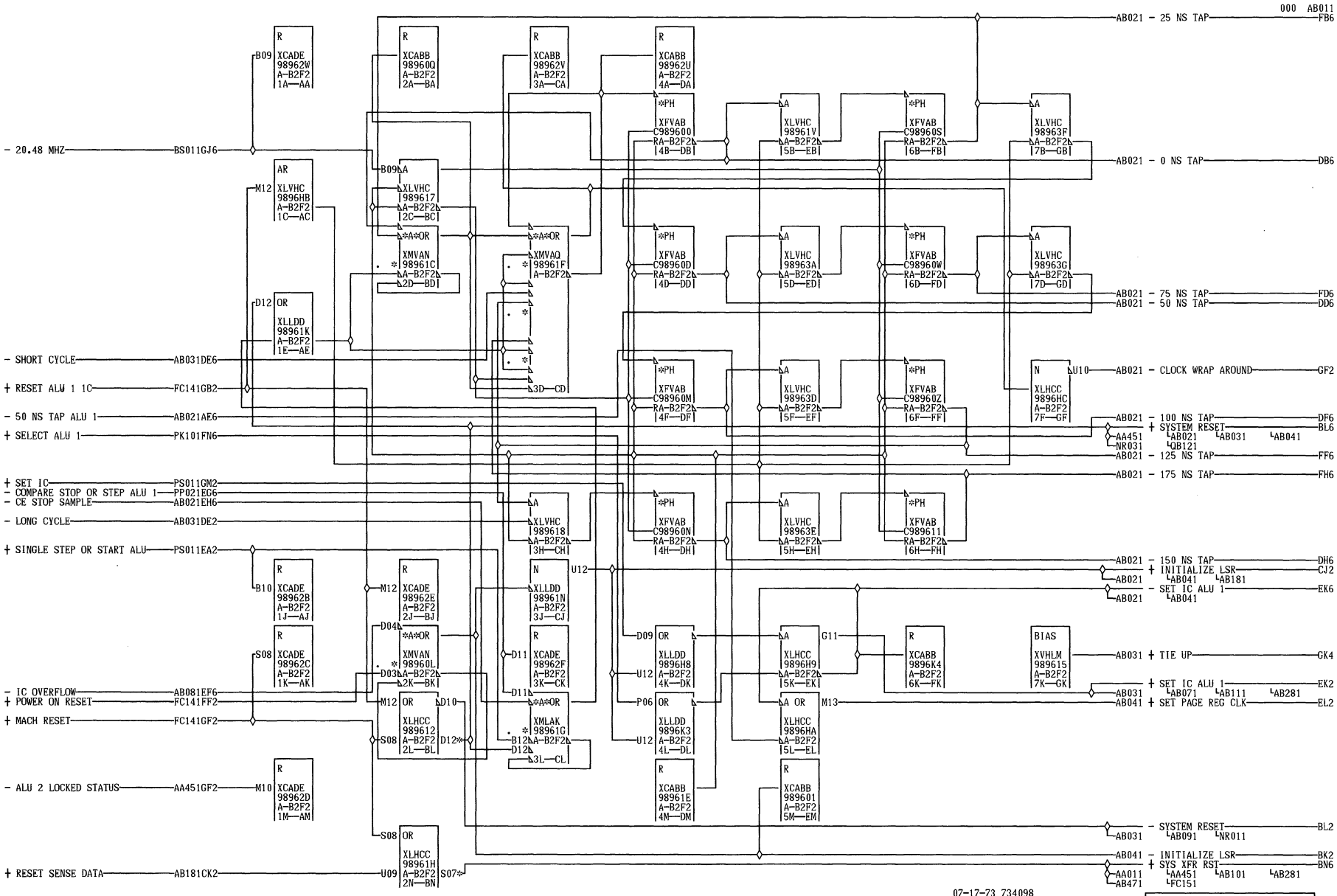
000 AB011
AB021 - 25 NS TAP FB6
- 20.48 MHZ BS011GJ6
AB021 - 0 NS TAP DB6
AB021 - 75 NS TAP FD6
AB021 - 50 NS TAP DD6
- SHORT CYCLE AB031DE6
+ RESET ALU 1 1C FC141GB2
- 50 NS TAP ALU 1 AB021AE6
+ SELECT ALU 1 PK101FN6
AB021 - CLOCK WRAP AROUND GF2
AB021 - 100 NS TAP DF6
+ SYSTEM RESET BL6
AB021 - 125 NS TAP FF6
AB021 - 175 NS TAP FH6
+ SET IC PS011GM2
- COMPARE STOP OR STEP ALU 1 PP021EG6
- CE STOP SAMPLE AB021EH6
- LONG CYCLE AB031DE2
+ SINGLE STEP OR START ALU PS011EA2
AB021 - 150 NS TAP DH6
+ INITIALIZE LSR CJ2
- SET IC ALU 1 EK6
AB031 + TIE UP GK4
- IC OVERFLOW AB081EF6
+ POWER ON RESET FC141FF2
+ SET IC ALU 1 EK2
AB041 + SET PAGE REG CLK EL2
+ MACH RESET FC141GF2
- ALU 2 LOCKED STATUS AA451GF2
- SYSTEM RESET BL2
AB041 - INITIALIZE LSR BK2
+ SYS XFR RST BN6
+ RESET SENSE DATA AB181CK2
07-17-73 734098
BL6 A-B2A3D09
01A-A2V3D09
BN6 A-B2A5B08
01A-A2V5B08
BASIC CLOCK TIMINGS
DATE 08-08-73 MACH. 3803-2
LOG 0051 FRAME 01
P.N. 2736163
IBM CORP. SDD BLK. GP
000

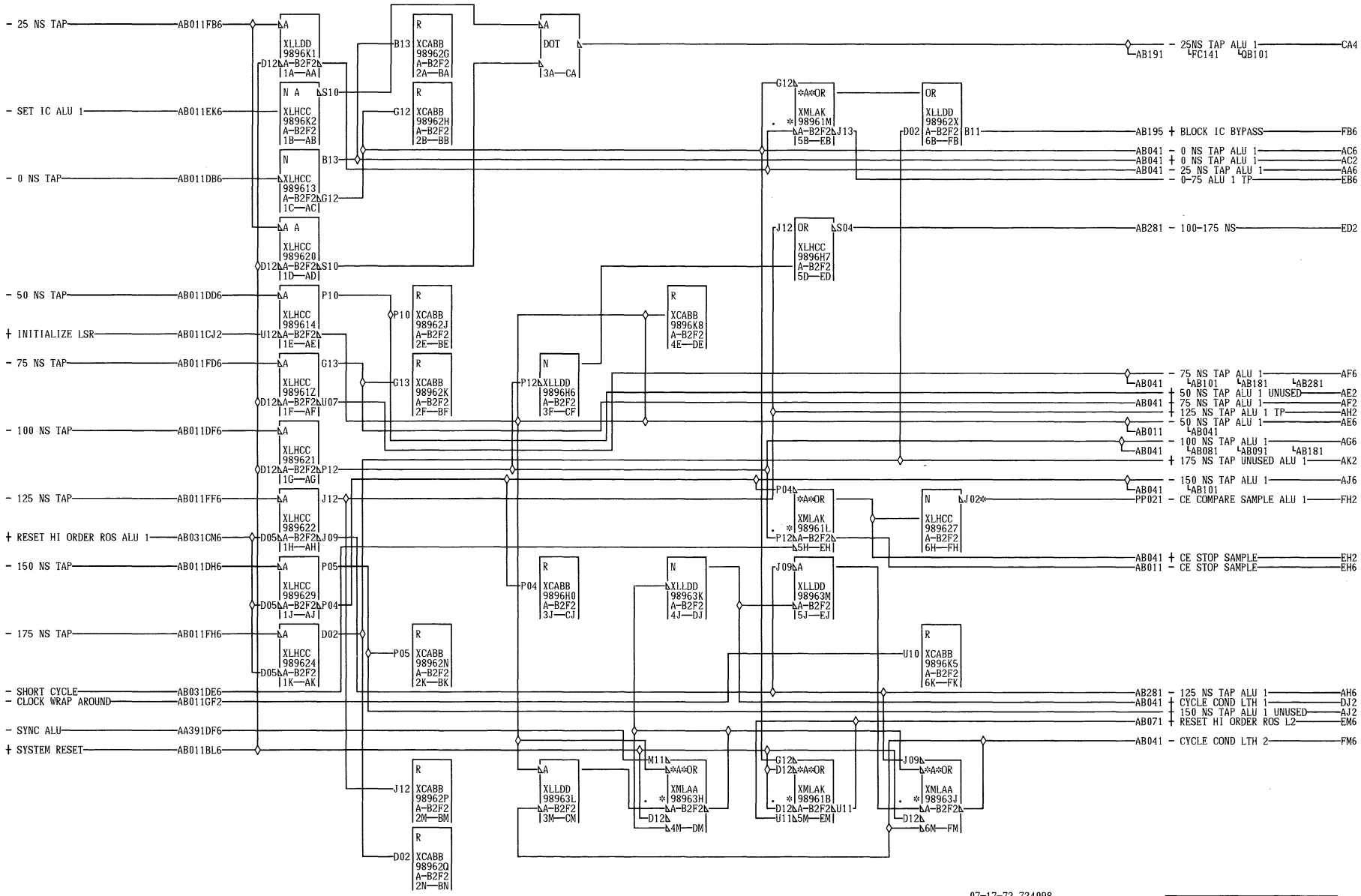

FH2 A-B2F1B13
01A-A1R1B13

07-17-73 734098

TAP POWERING ALU 1	
DATE 08-08-73 MACH. 3803-2	
LOG 0051 FRAME 01	
P.N. 2736164	
IBM CORP. SDD BLK. GN	

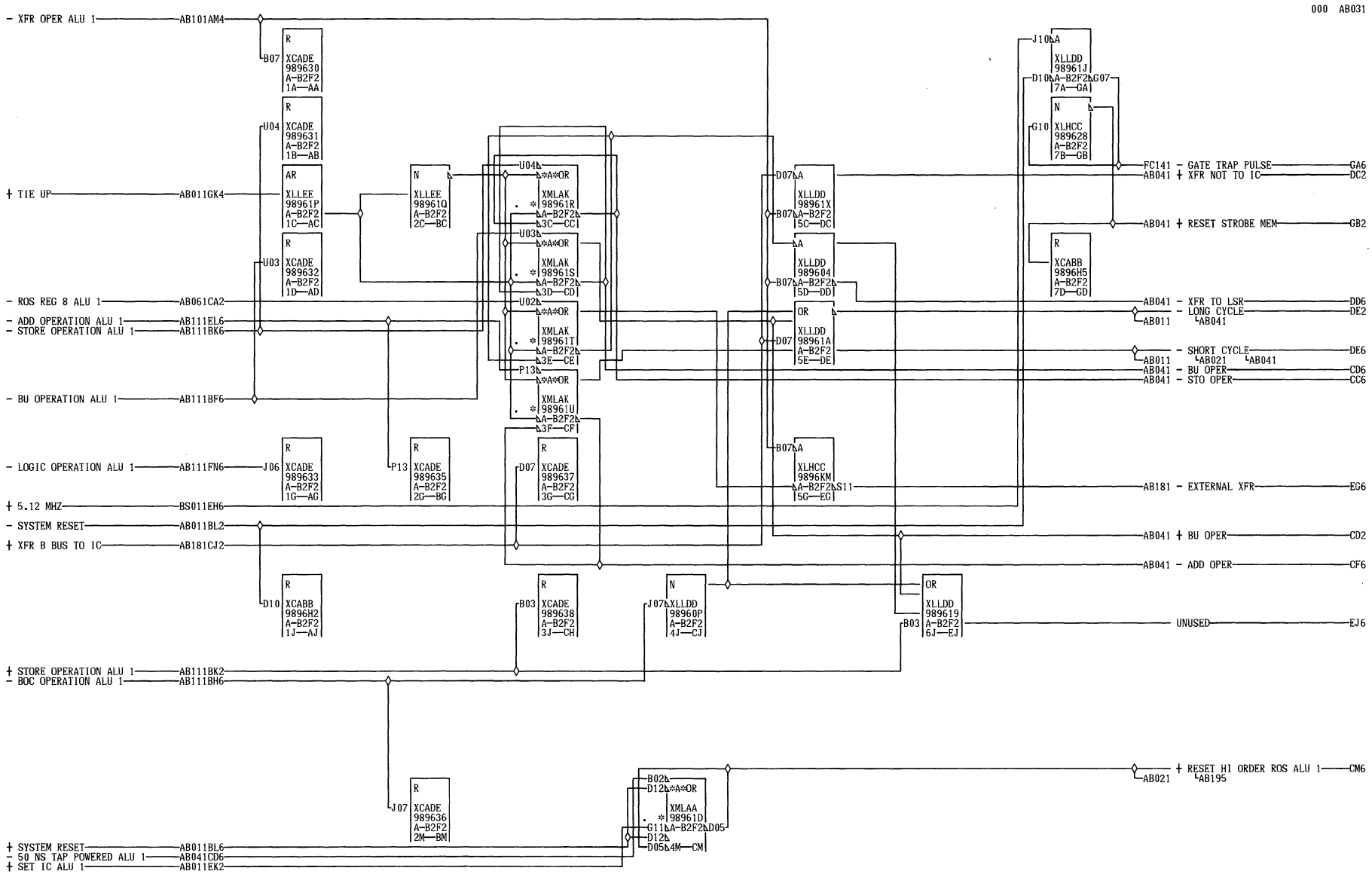
000 AB031
- XFR OPER ALU 1 AB101AM4
+ TIE UP AB011GK4
- ROS REG 8 ALU 1 AB061CA2
- ADD OPERATION ALU 1 AB111EL6
- STORE OPERATION ALU 1 AB111BK6
- BU OPERATION ALU 1 AB111BF6
- LOGIC OPERATION ALU 1 AB111FN6
+ 5.12 MHZ BS011EH6
- SYSTEM RESET AB011BL2
+ XFR B BUS TO IC AB181CJ2
+ STORE OPERATION ALU 1 AB111BK2
- BOC OPERATION ALU 1 AB111BH6
+ SYSTEM RESET AB011BL6
- 50 NS TAP POWERED ALU 1 AB041CD6
+ SET IC ALU 1 AB011EK2
B07 XCADE 989630 A-B2F2 1A—AA
U04 XCADE 989631 A-B2F2 1B—AB
U03 XCADE 989632 A-B2F2 1D—AD
J06 XCADE 989633 A-B2F2 1G—AG
D10 XCABB 9896H2 A-B2F2 1J—AJ
XLLEE 98961P A-B2F2 1C—AC
XLLEE 98961Q A-B2F2 2C—BC
XMLAK 98961R A-B2F2 3C—CC
XMLAK 98961S A-B2F2 3D—CD
XMLAK 98961T A-B2F2 3E—CE
XMLAK 98961U A-B2F2 3F—CF
P13 XCADE 989635 A-B2F2 2G—BG
D07 XCADE 989637 A-B2F2 3G—CG
B03 XCADE 989638 A-B2F2 3J—CH
J07 XCADE 989636 A-B2F2 2M—BM
XLLDD 98960P A-B2F2 4J—CJ
XMLAA 98961D A-B2F2 D05 4M—CM
XLLDD 98961X A-B2F2 5C—DC
XLLDD 989604 A-B2F2 5D—DD
XLLDD 98961A A-B2F2 5E—DE
XLHCC 9896KM A-B2F2 S11 5G—EG
XLLDD 989619 A-B2F2 6J—EJ
XLLDD 98961J A-B2F2 7A—GA
XLHCC 989628 A-B2F2 7B—GB
XCABB 9896H5 A-B2F2 7D—GD
FC141 - GATE TRAP PULSE GA6
AB041 + XFR NOT TO IC DC2
AB041 + RESET STROBE MEM GB2
AB041 - XFR TO LSR DD6
AB011 - LONG CYCLE DE2
AB041
AB011 - SHORT CYCLE DE6
AB021 AB041
AB041 - BU OPER CD6
AB041 - SIO OPER CC6
AB181 - EXTERNAL XFR EG6
AB041 + BU OPER CD2
AB041 - ADD OPER CF6
UNUSED EJ6
AB021 + RESET HI ORDER ROS ALU 1 CM6
AB195
07-17-73 734098
CLOCK GATING
DATE 08-08-73 MACH. 3803-2
LOG 0051 FRAME 01
P.N. 2736165
IBM CORP. SDD BLK. GE
AB031
000

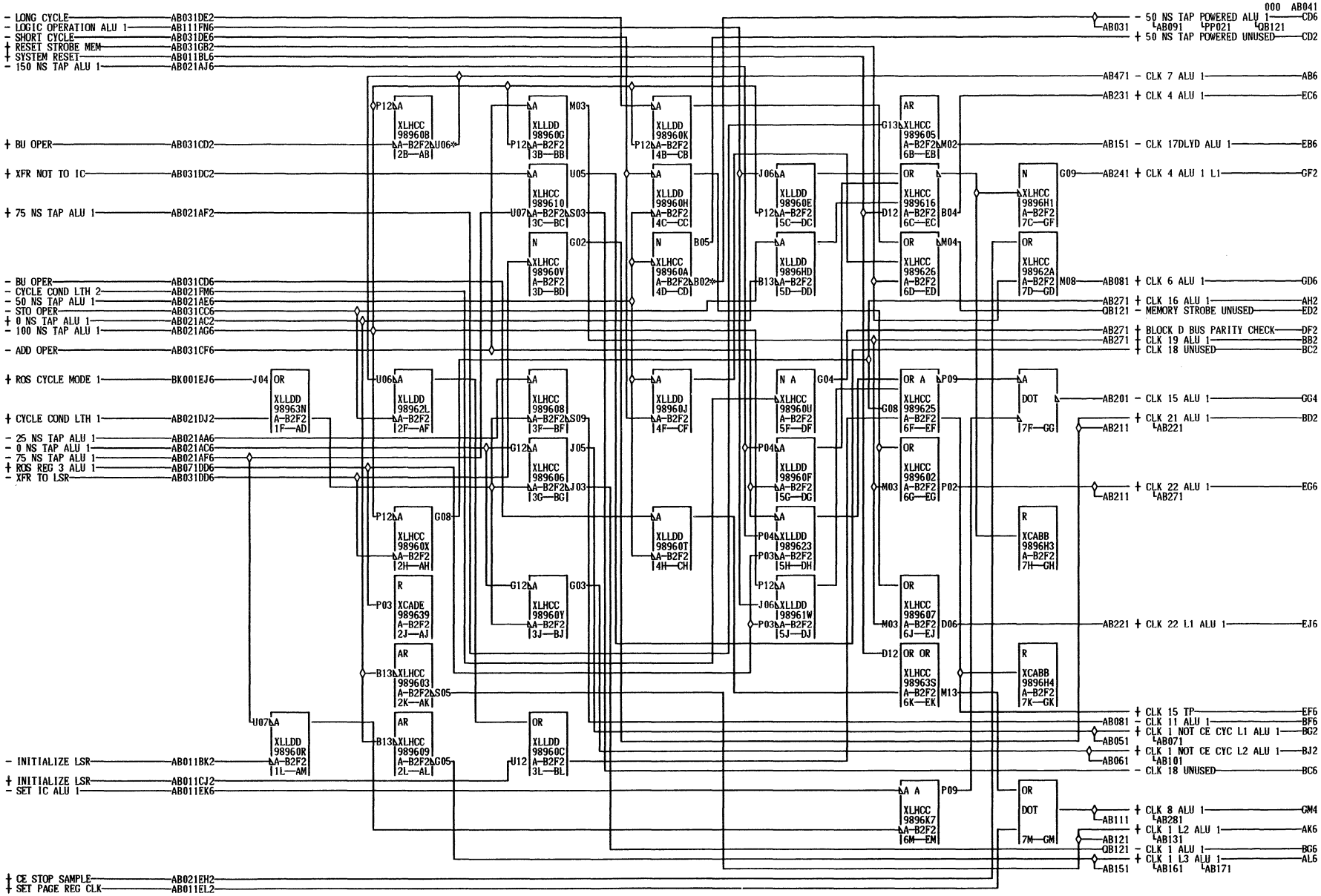

AB6 A-B2B2B02
01A-A2U2B02
CD6 A-B2B1C13
01A-A1H1E13

07-17-73 734098
07-16-80 846627

CLOCK POWERING ALU 1
DATE 08-18-81 MACH. 3803-2
LOG 1002 FRAME 01
P.N. 2736166
IBM CORP. SDD BLK. GN

A B 0 4 1 000

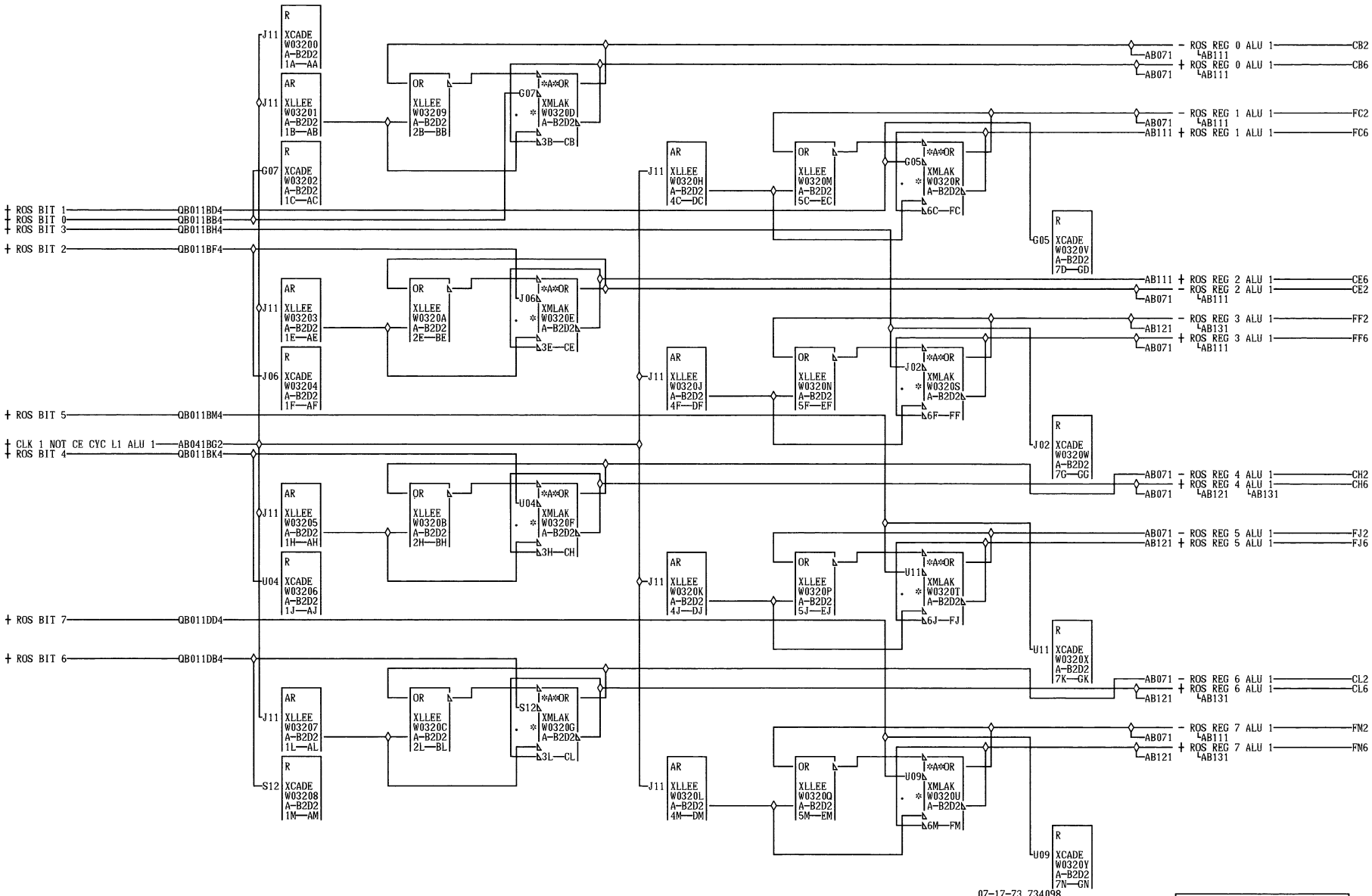

07-17-73 734098

ROS REG 0-7 ALU 1			
DATE	08-08-73	MACH. 3803-2	
LOG	0051	FRAME	01
		P.N.	2736167
IBM CORP.	SDD BLK.		GP

A B 0 5 1 000

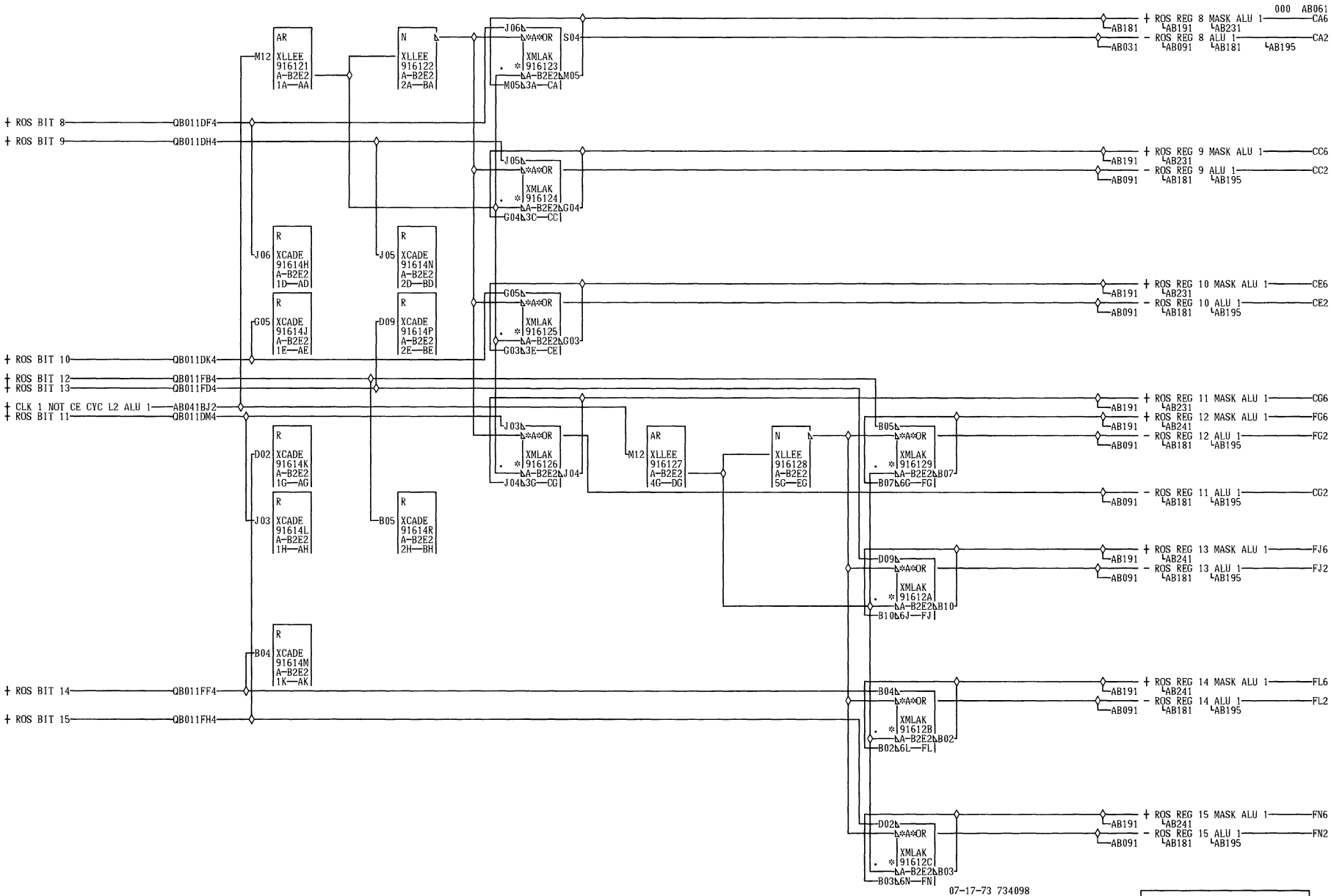
000 AB061
+ ROS BIT 8 QB011DF4
+ ROS BIT 9 QB011DH4
+ ROS BIT 10 QB011DK4
+ ROS BIT 12 QB011FB4
+ ROS BIT 13 QB011FD4
+ CLK 1 NOT CE CYC L2 ALU 1 AB041BJ2
+ ROS BIT 11 QB011DM4
+ ROS BIT 14 QB011FF4
+ ROS BIT 15 QB011FH4
AR XLLEE 916121 A-B2E2 1A—AA
N XLLEE 916122 A-B2E2 2A—BA
J06 *A*OR S04
XMLAK 916123 A-B2E2 M05
M05 3A—CA
J05 *A*OR
XMLAK 916124 A-B2E2 G04
G04 3C—CC
G05 *A*OR
XMLAK 916125 A-B2E2 G03
G03 3E—CE
J03 *A*OR
XMLAK 916126 A-B2E2 J04
J04 3G—CG
AR XLLEE 916127 A-B2E2 4G—DG
N XLLEE 916128 A-B2E2 5G—EG
B05 *A*OR
XMLAK 916129 A-B2E2 B07
B07 6G—FG
D09 *A*OR
XMLAK 91612A A-B2E2 B10
B10 6J—FJ
B04 *A*OR
XMLAK 91612B A-B2E2 B02
B02 6L—FL
D02 *A*OR
XMLAK 91612C A-B2E2 B03
B03 6N—FN
R XCADE 91614H A-B2E2 1D—AD
R XCADE 91614N A-B2E2 2D—BD
R XCADE 91614J A-B2E2 1E—AE
R XCADE 91614P A-B2E2 2E—BE
R XCADE 91614K A-B2E2 1G—AG
R XCADE 91614L A-B2E2 1H—AH
R XCADE 91614R A-B2E2 2H—BH
R XCADE 91614M A-B2E2 1K—AK
+ ROS REG 8 MASK ALU 1 CA6
AB181 AB191 AB231
- ROS REG 8 ALU 1 CA2
AB031 AB091 AB181 AB195
+ ROS REG 9 MASK ALU 1 CC6
AB191 AB231
- ROS REG 9 ALU 1 CC2
AB091 AB181 AB195
+ ROS REG 10 MASK ALU 1 CE6
AB191 AB231
- ROS REG 10 ALU 1 CE2
AB091 AB181 AB195
+ ROS REG 11 MASK ALU 1 CG6
AB191 AB231
+ ROS REG 12 MASK ALU 1 FG6
AB191 AB241
- ROS REG 12 ALU 1 FG2
AB091 AB181 AB195
- ROS REG 11 ALU 1 CG2
AB091 AB181 AB195
+ ROS REG 13 MASK ALU 1 FJ6
AB191 AB241
- ROS REG 13 ALU 1 FJ2
AB091 AB181 AB195
+ ROS REG 14 MASK ALU 1 FL6
AB191 AB241
- ROS REG 14 ALU 1 FL2
AB091 AB181 AB195
+ ROS REG 15 MASK ALU 1 FN6
AB191 AB241
- ROS REG 15 ALU 1 FN2
AB091 AB181 AB195
07-17-73 734098
LOW ORDER ROS REGISTER ALU 1
DATE 08-08-73 MACH. 3803-2
LOG 0051 FRAME 01
P.N. 2736168
IBM CORP. BLK. GK
A B 0 6 1 000

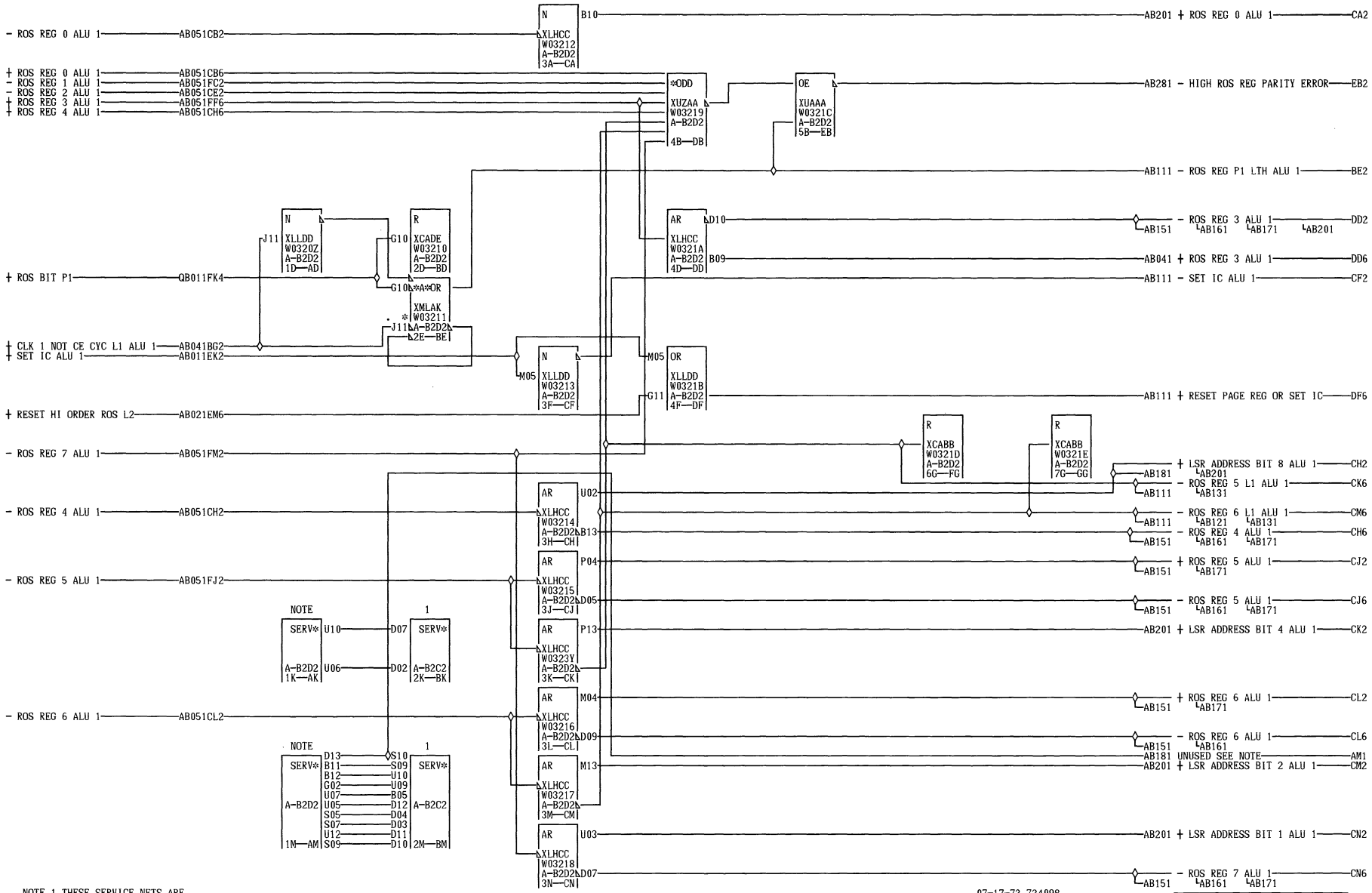

NOTE 1 THESE SERVICE NETS ARE TO RETAIN NETS NOT USED BY A W032 AND W034 CARDS BUT USED B BY 9148 AND 9160 CARDS WHEN 0 INSTALLED.
7
1

000

07-17-73 734098

ROS REG POWERING ALU 1		
DATE 08-08-73 MACH. 3803-2		A B 0 7 1
LOG 0051 FRAME 01		
P.N. 2736169		
IBM CORP. SDD BLK. GH		000

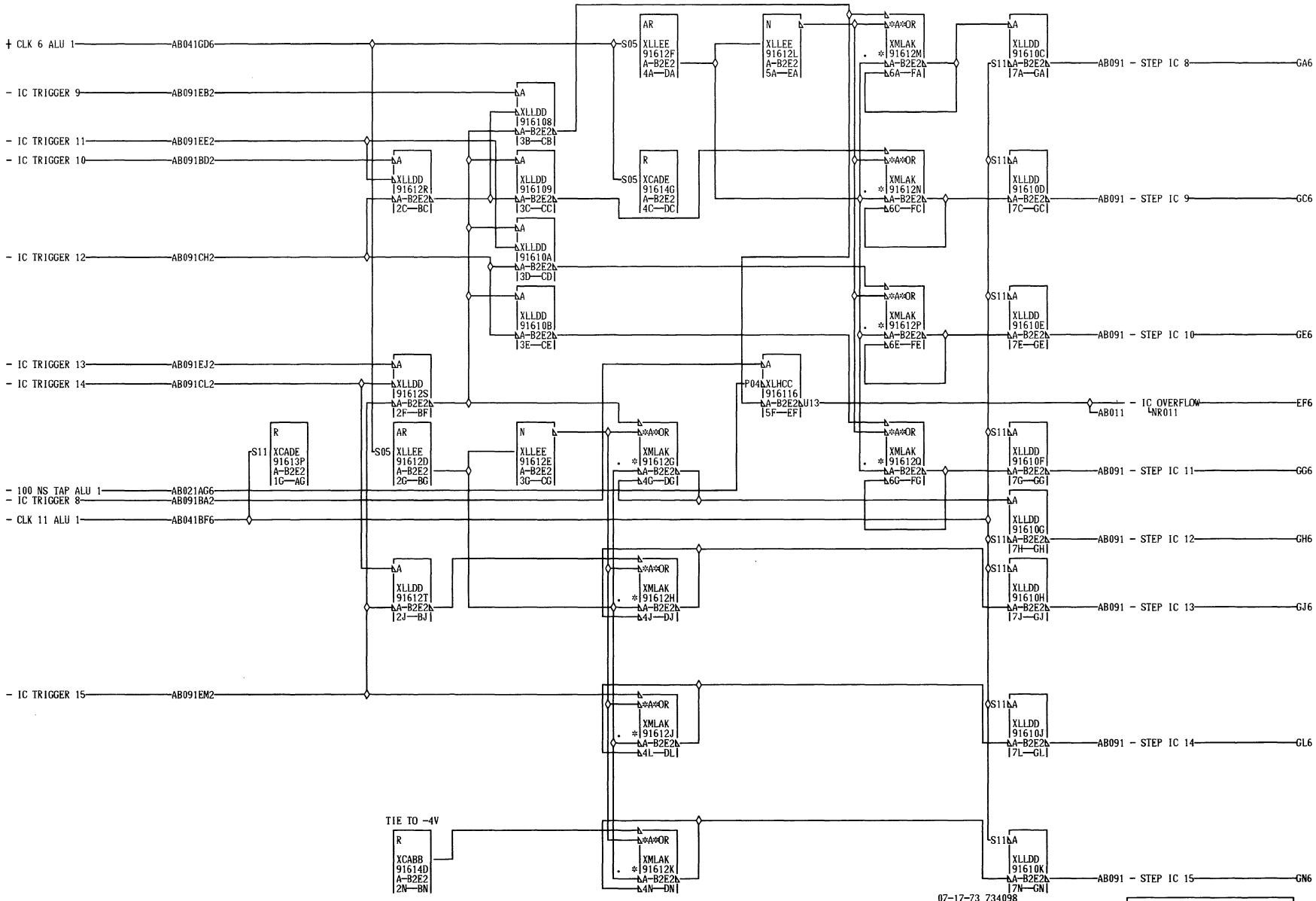

INSTRUCTION COUNTER LOOK-AHEAD ALU 1			
DATE	08-18-81	MACH. 3803-2	
LOG	0051	FRAME	01
		P.N.	2736170
IBM CORP.		BLK.	GP

AB081 000

AB081 000

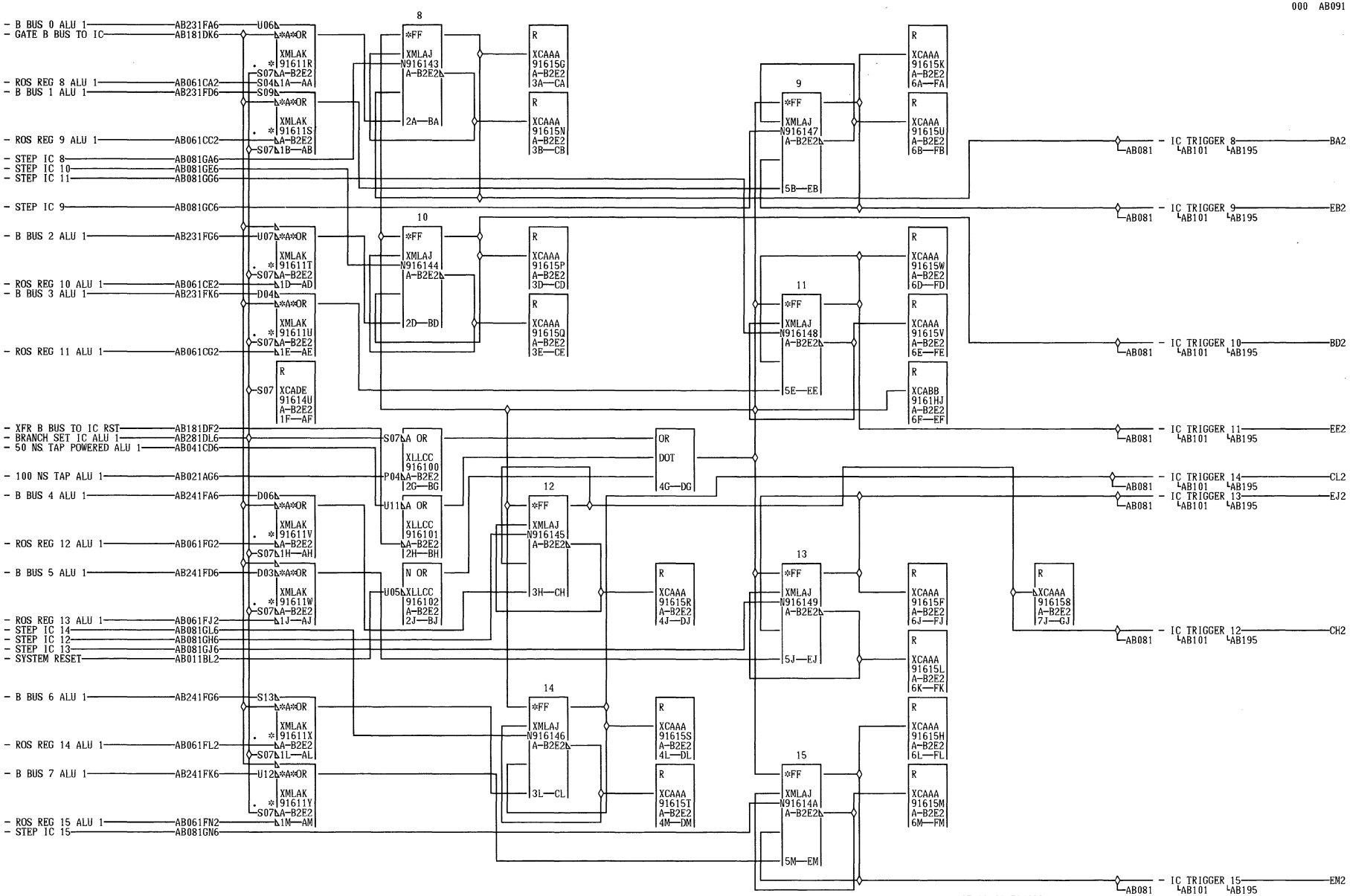
- B BUS 0 ALU 1 AB231FA6
- GATE B BUS TO IC AB181DK6
- ROS REG 8 ALU 1 AB061CA2
- B BUS 1 ALU 1 AB231FD6
- ROS REG 9 ALU 1 AB061CC2
- STEP IC 8 AB081GA6
- STEP IC 10 AB081GE6
- STEP IC 11 AB081GG6
- STEP IC 9 AB081GC6
- B BUS 2 ALU 1 AB231FG6
- ROS REG 10 ALU 1 AB061CE2
- B BUS 3 ALU 1 AB231FK6
- ROS REG 11 ALU 1 AB061CG2
- XFR B BUS TO IC RST AB181DF2
- BRANCH SET IC ALU 1 AB281DL6
- 50 NS TAP POWERED ALU 1 AB041CD6
- 100 NS TAP ALU 1 AB021AG6
- B BUS 4 ALU 1 AB241FA6
- ROS REG 12 ALU 1 AB061FG2
- B BUS 5 ALU 1 AB241FD6
- ROS REG 13 ALU 1 AB061FJ2
- STEP IC 14 AB081GL6
- STEP IC 12 AB081GH6
- STEP IC 13 AB081GJ6
- SYSTEM RESET AB011BL2
- B BUS 6 ALU 1 AB241FG6
- ROS REG 14 ALU 1 AB061FL2
- B BUS 7 ALU 1 AB241FK6
- ROS REG 15 ALU 1 AB061FN2
- STEP IC 15 AB081GN6
- IC TRIGGER 8 BA2
- IC TRIGGER 9 EB2
- IC TRIGGER 10 BD2
- IC TRIGGER 11 EE2
- IC TRIGGER 14 CL2
- IC TRIGGER 13 EJ2
- IC TRIGGER 12 CH2
- IC TRIGGER 15 EM2
07-17-73 734098
INSTRUCTION COUNTER ALU 1
DATE 08-08-73 MACH. 3803-2
LOG 0051 FRAME 01
P.N. 2736171
IBM CORP. BLK. TK

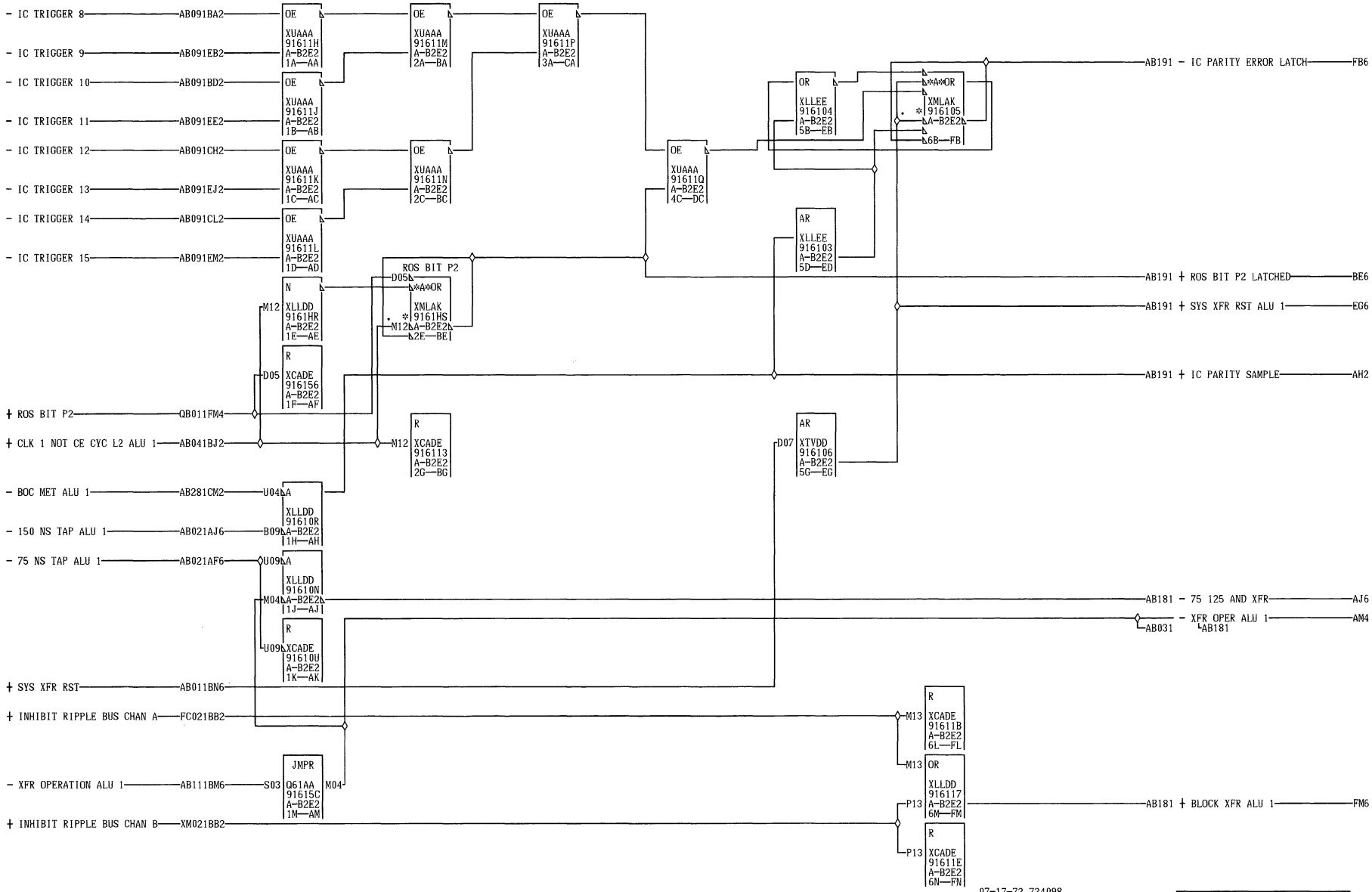

07-17-73 734098

LOAD INSTRUCTION COUNTER PARITY CHECK			
DATE	08-08-73	MACH. 3803-2	
LOG	0051	FRAME	01
		P.N.	2736172
IBM CORP.		BLK.	GL

A B 1 0 1 000

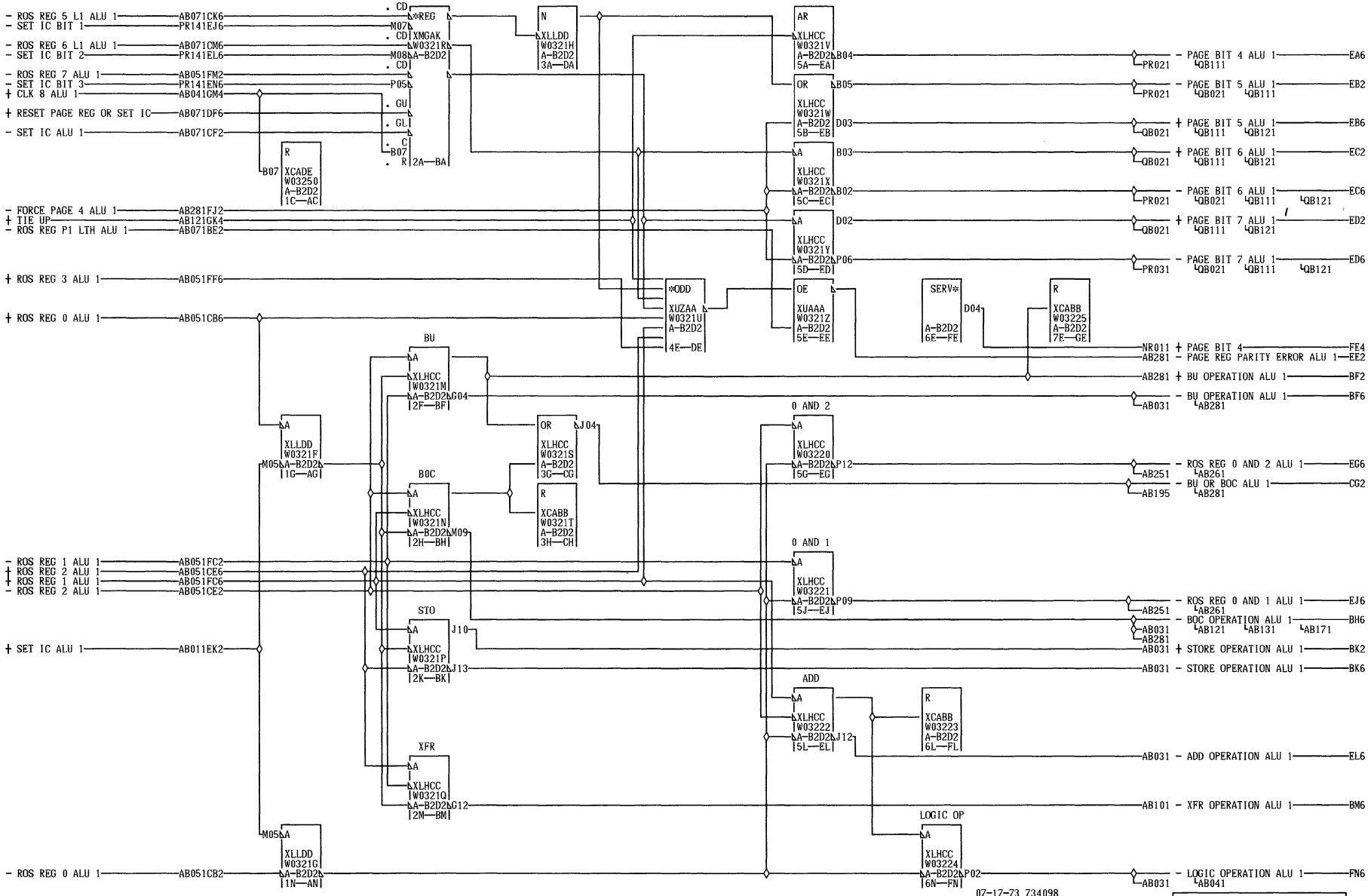

07-17-73 734098

PAGE REG AND INSTRUCTION DCD ALU 1	
DATE 08-08-73 MACH. 3803-2	
LOG 0051 FRAME 01	
P.N. 2736173	
IBM CORP. SDD BLK. GF	

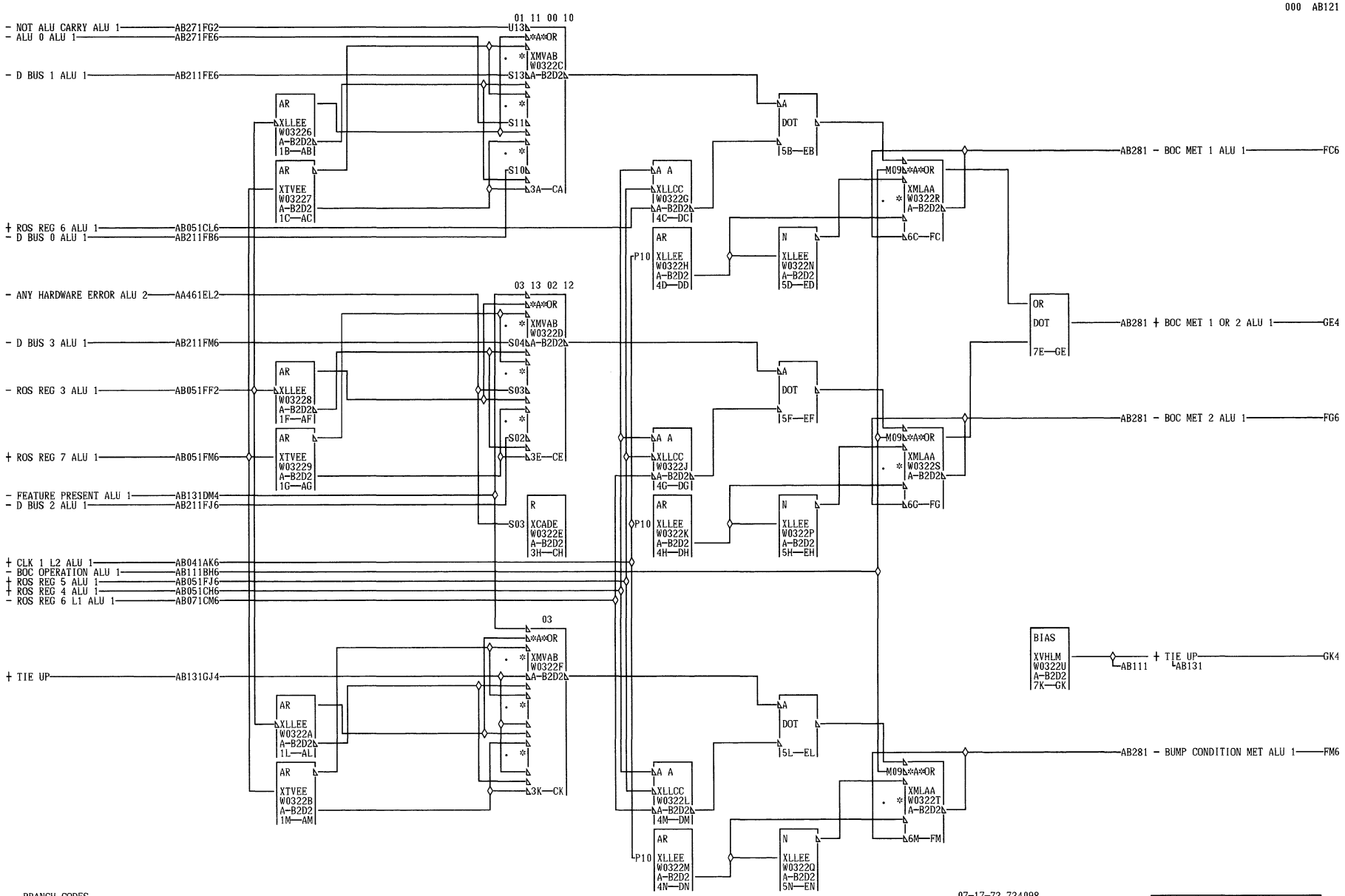

BRANCH CODES
00 ALU 0
A 01 NOT ALU CARRY
B 02 ANY ALU HARDWARE ERROR
1 03 FEATURE PRESENT
2 10 D BUS 0 11 D BUS 1
1 12 D BUS 2 13 D BUS 3

000

07-17-73 734098

BOC CONDITIONS ALU 1		
DATE 08-08-73 MACH. 3803-2		A B 1 2 1
LOG 0051 FRAME 01		
P.N. 2736174		
IBM CORP. SDD BLK. GL		000

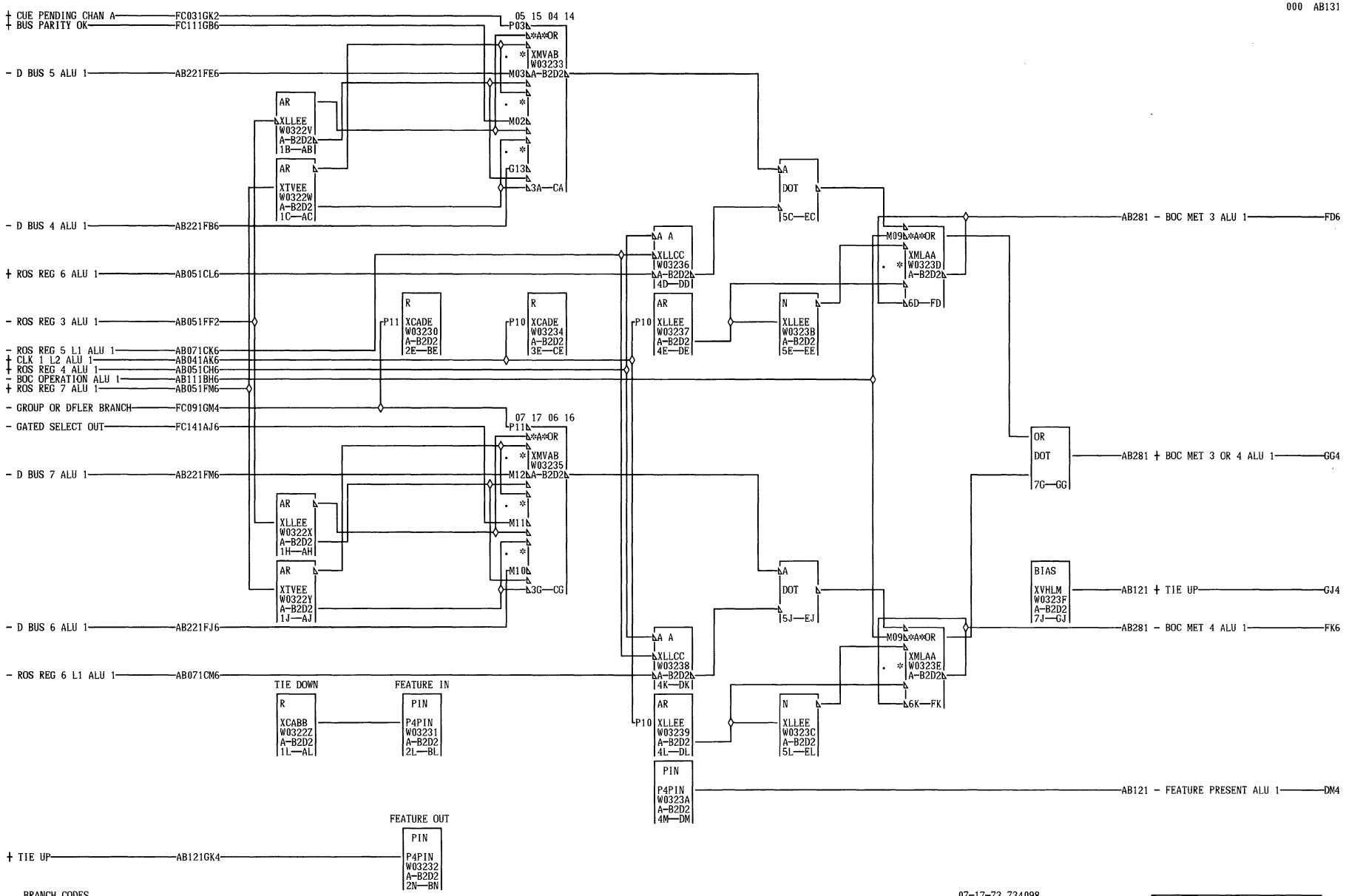

BRANCH CODES
04 NOT BUS OUT PARITY ODD
A 05 NOT CUE PENDING CHAN A
B 06 GATED SELECT OUT
1 07 DATA CHECK
3 14 D BUS 4 15 D BUS 5
1 16 D BUS 6 17 D BUS 7

000

07-17-73 734098

BOC CONDITIONS ALU 1		
DATE 08-08-73	MACH. 3803-2	A B
LOG 0051	FRAME 01	1 3
	P.N. 2736175	1
IBM CORP. SDD BLK.	GK	000

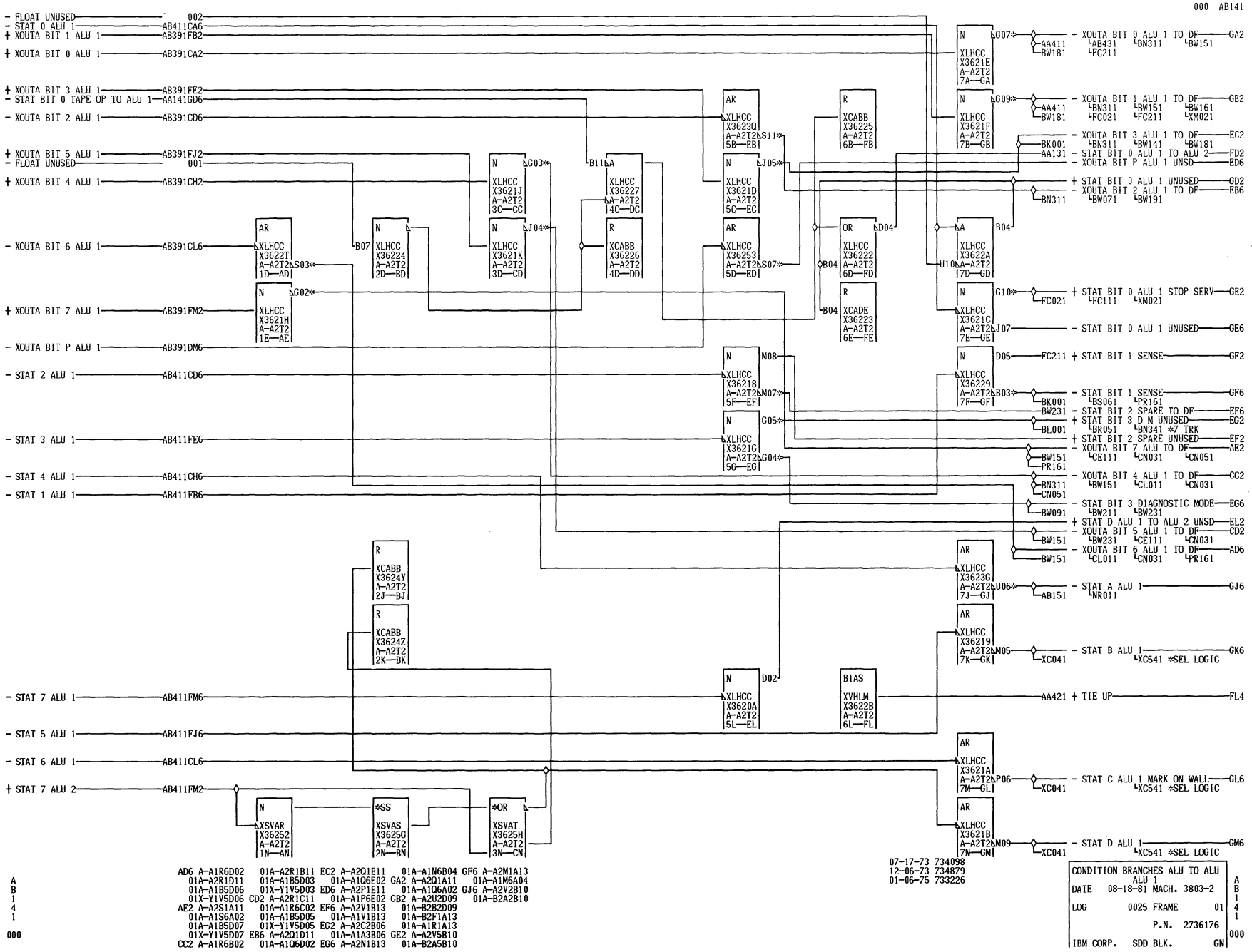
- FLOAT UNUSED 002
- STAT 0 ALU 1 AB411CA6
+ XOUTA BIT 1 ALU 1 AB391FB2
+ XOUTA BIT 0 ALU 1 AB391CA2
+ XOUTA BIT 3 ALU 1 AB391FE2
- STAT BIT 0 TAPE OP TO ALU 1 AA141GD6
- XOUTA BIT 2 ALU 1 AB391CD6
+ XOUTA BIT 5 ALU 1 AB391FJ2
- FLOAT UNUSED 001
+ XOUTA BIT 4 ALU 1 AB391CH2
- XOUTA BIT 6 ALU 1 AB391CL6
+ XOUTA BIT 7 ALU 1 AB391FM2
- XOUTA BIT P ALU 1 AB391DM6
- STAT 2 ALU 1 AB411CD6
- STAT 3 ALU 1 AB411FE6
- STAT 4 ALU 1 AB411CH6
- STAT 1 ALU 1 AB411FB6
- STAT 7 ALU 1 AB411FM6
- STAT 5 ALU 1 AB411FJ6
- STAT 6 ALU 1 AB411CL6
+ STAT 7 ALU 2 AB411FM2
- XOUTA BIT 0 ALU 1 TO DF GA2
- XOUTA BIT 1 ALU 1 TO DF GB2
- XOUTA BIT 3 ALU 1 TO DF EC2
- STAT BIT 0 ALU 1 TO ALU 2 FD2
- XOUTA BIT P ALU 1 UNSD ED6
+ STAT BIT 0 ALU 1 UNUSED GD2
- XOUTA BIT 2 ALU 1 TO DF EB6
+ STAT BIT 0 ALU 1 STOP SERV GE2
- STAT BIT 0 ALU 1 UNUSED GE6
+ STAT BIT 1 SENSE GF2
- STAT BIT 1 SENSE GF6
- STAT BIT 2 SPARE TO DF EF6
+ STAT BIT 3 D M UNUSED EG2
+ STAT BIT 2 SPARE UNUSED EF2
- XOUTA BIT 7 ALU TO DF AE2
- XOUTA BIT 4 ALU 1 TO DF CC2
- STAT BIT 3 DIAGNOSTIC MODE EG6
+ STAT D ALU 1 TO ALU 2 UNSD EL2
- XOUTA BIT 5 ALU 1 TO DF CD2
- XOUTA BIT 6 ALU 1 TO DF AD6
- STAT A ALU 1 GJ6
- STAT B ALU 1 GK6
+ TIE UP FL4
- STAT C ALU 1 MARK ON WALL GL6
- STAT D ALU 1 GM6
*SEL LOGIC
07-17-73 734098
12-06-73 734879
01-06-75 733226
CONDITION BRANCHES ALU TO ALU ALU 1
DATE 08-18-81 MACH. 3803-2
LOG 0025 FRAME 01
P.N. 2736176
IBM CORP. SDD BLK. GN
000

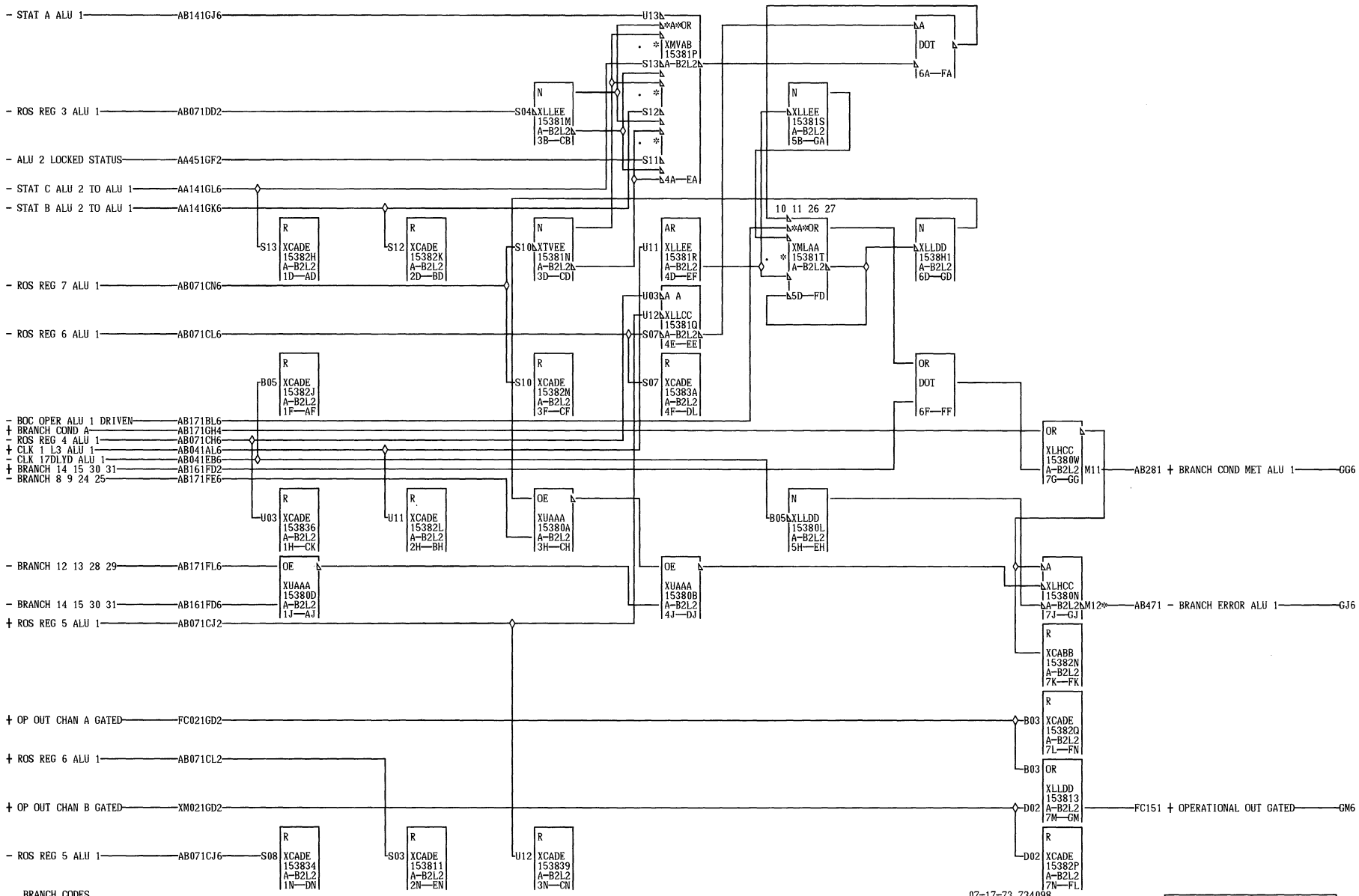

BRANCH CODES
0A STAT A
A 0B STAT B
B 1A STAT C
1 1B ALU 2 LOCKED STATUS
5
1

000

GJ6 A-B2A3D05
01A-A2V3D05

07-17-73 734098

BRANCH ON CONDITION

DATE	08-08-73 MACH. 3803-2	A
LOG	0051 FRAME 01	B
	P.N. 2736177	1
IBM CORP.	SDD BLK. GN	5
		1
		000

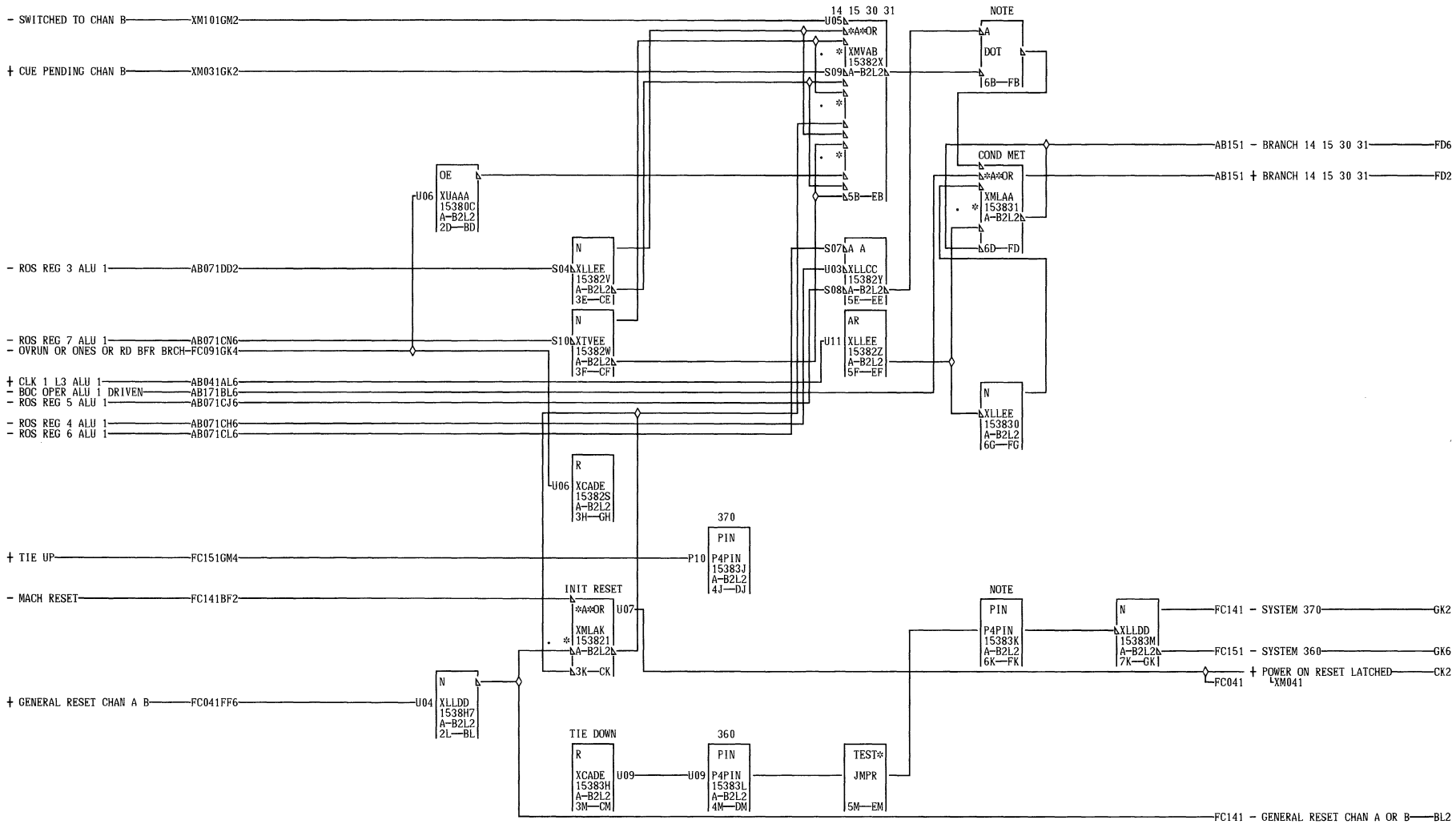

BRANCH CODES
OE-SW TO B
A 1E-CUE PEND
B 0F-INIT RESET 1F OVERRUN
1 NOTE SYSTEM 360 PLUG T03 TO
6 T04 SYSTEM 370 PLUG T03 TO T02
1 NOTE.
TIE A-B2L2S09 TO A-B2L2S06
000WITH P/N 2520942 IF TWO CHAN
SWITCH FEAT IS NOT INSTALLED

07-17-73 734098

INTERFACE BRANCH COND CHAN B		
DATE 08-08-73 MACH. 3803-2		A B 1 6 1
LOG 0051 FRAME 01		
P.N. 2736178		000
IBM CORP. SDD BLK. GL		

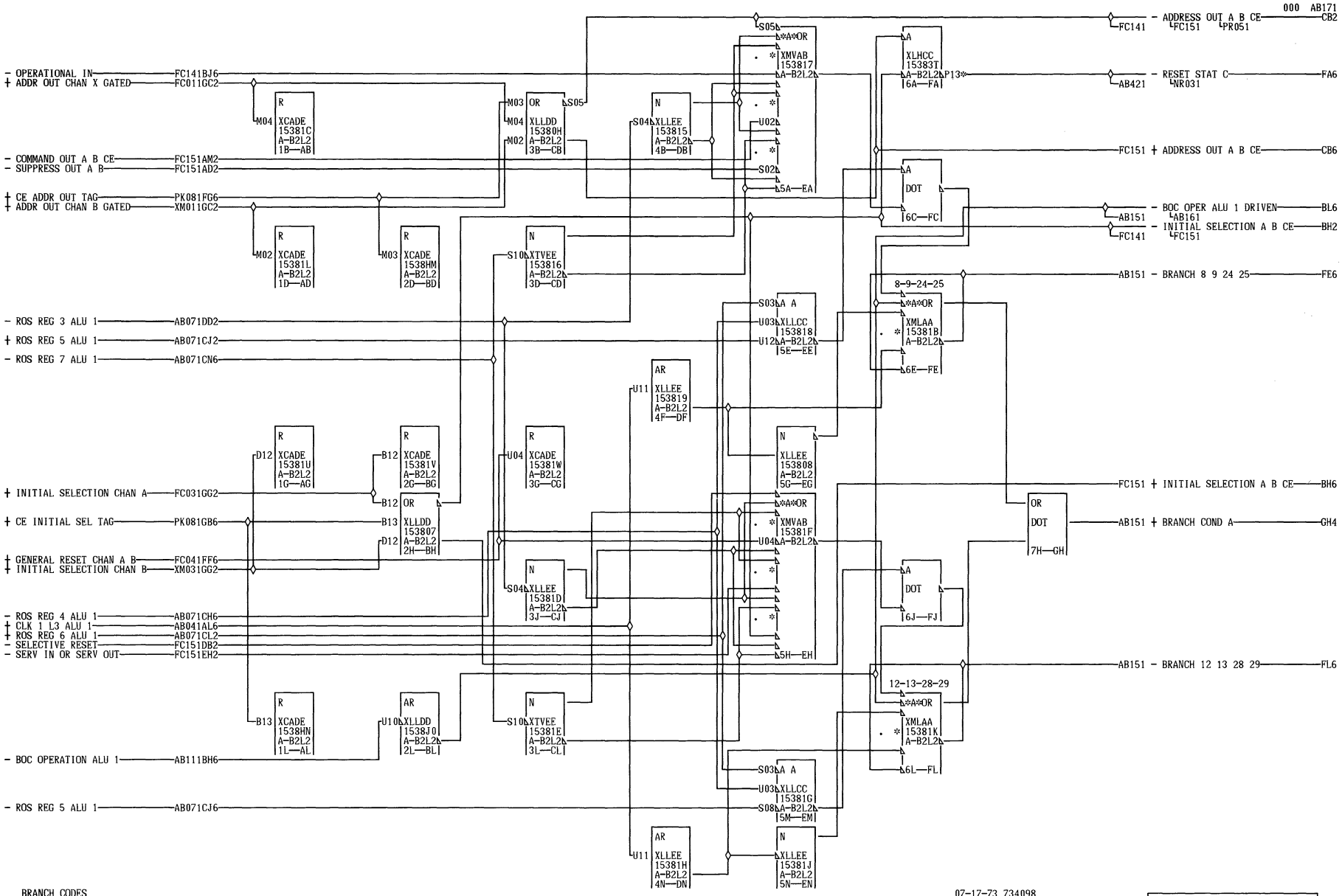
000 AB171
- ADDRESS OUT A B CE
FC141 FC151 PR051
CB2
- OPERATIONAL IN
FC141BJ6
+ ADDR OUT CHAN X GATED
FC011GC2
- RESET STAT C
AB421 NR031
FA6
- COMMAND OUT A B CE
FC151AM2
- SUPPRESS OUT A B
FC151AD2
FC151 + ADDRESS OUT A B CE
CB6
+ CE ADDR OUT TAG
PK081FG6
+ ADDR OUT CHAN B GATED
XM011GC2
- BOC OPER ALU 1 DRIVEN
AB151 AB161
BL6
- INITIAL SELECTION A B CE
FC141 FC151
BH2
AB151 - BRANCH 8 9 24 25
FE6
- ROS REG 3 ALU 1
AB071DD2
+ ROS REG 5 ALU 1
AB071CJ2
- ROS REG 7 ALU 1
AB071CN6
FC151 + INITIAL SELECTION A B CE
BH6
+ INITIAL SELECTION CHAN A
FC031GG2
+ CE INITIAL SEL TAG
PK081GB6
AB151 + BRANCH COND A
GH4
+ GENERAL RESET CHAN A B
FC041FF6
+ INITIAL SELECTION CHAN B
XM031GG2
- ROS REG 4 ALU 1
AB071CH6
+ CLK 1 L3 ALU 1
AB041AL6
+ ROS REG 6 ALU 1
AB071CL2
- SELECTIVE RESET
FC151DB2
- SERV IN OR SERV OUT
FC151EH2
AB151 - BRANCH 12 13 28 29
FL6
- BOC OPERATION ALU 1
AB111BH6
- ROS REG 5 ALU 1
AB071CJ6
BRANCH CODES
08 ADDRESS OUT
A 09 COMMAND OUT
B 0C SELECTIVE RESET
1 0D SERV IN OR SERV OUT
7 18 OP IN
1 19 SUPPRESS OUT
1C GENERAL RESET
0001D INITIAL SELECTION
FA6 A-B2B5D13
01A-A2U5D13
07-17-73 734098
INTERFACE BRANCH ON COND
DATE 08-08-73 MACH. 3803-2
LOG 0051 FRAME 01
P.N. 2736179
IBM CORP. SDD BLK. GM
A B 1 7 1 000

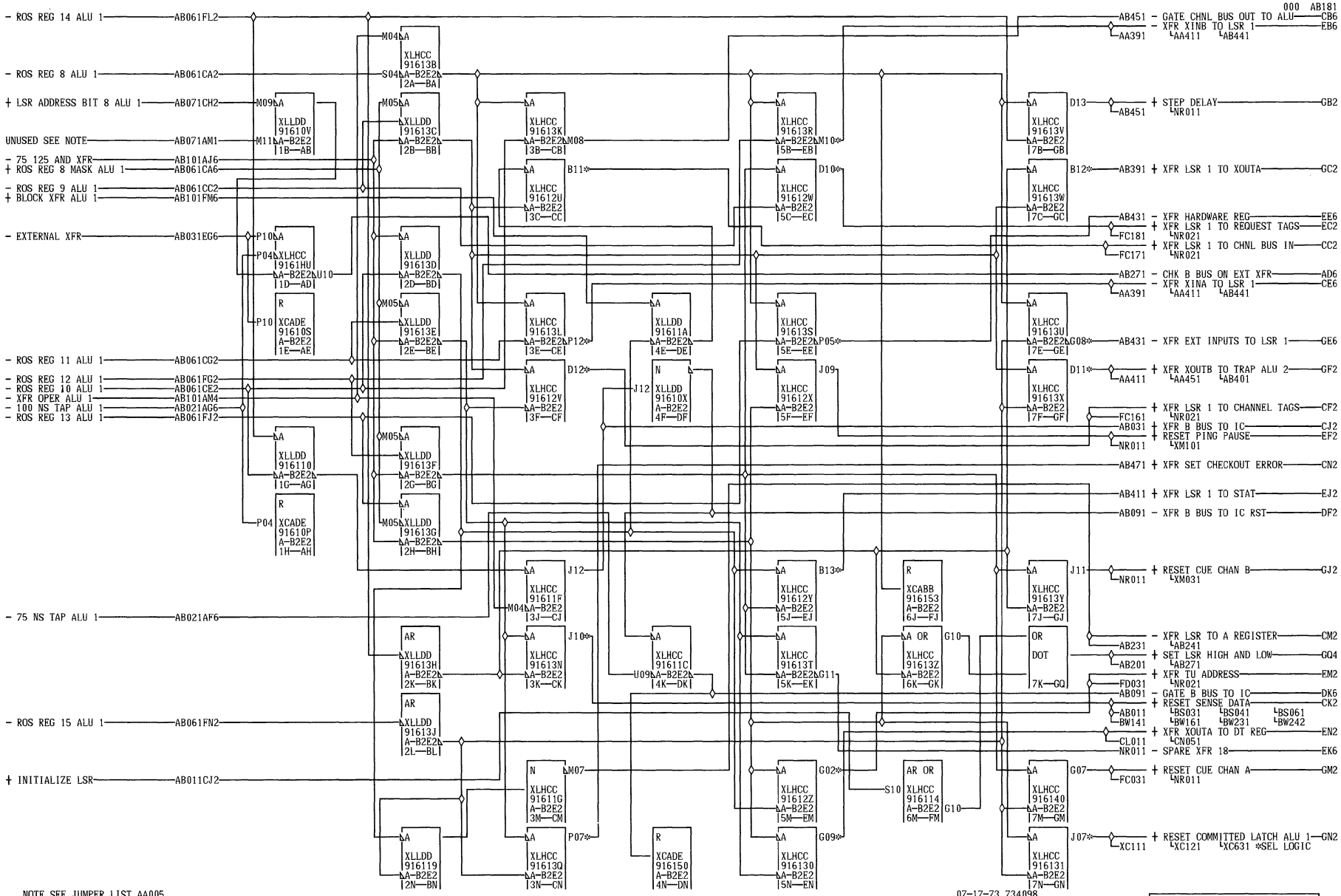

NOTE SEE JUMPER LIST AA005

CC2 A-B2A2D02 01A-A2V4D07 EM2 A-B2A2D11 01A-A2V3D10
01A-A2V2D02 EB6 A-B2A2B13 01A-A2V2D11 GF2 A-B2A2D06
CE6 A-B2A3D03 01A-A2V2B13 EN2 A-B2F1C13 01A-A2V2D06
01A-A2V3D03 EC2 A-B2A4D06 01A-A1R1C13 GN2 A-B2B5B08
CF2 A-B2A2D09 01A-A2V4D06 01A-A1B5D09 01A-A2U5B08
01A-A2V2D09 EE6 A-B2A2D05 01X-Y1V5D09
CK2 A-B2F1E13 01A-A2V2D05 GC2 A-B2A2D03
01A-A1R1E13 EJ2 A-B2A2D10 01A-A2V2D03
CN2 A-B2A4D07 01A-A2V2D10 GE6 A-B2A3D10

07-17-73 734098

TRANSFER DECODE	
DATE 08-08-73 MACH. 3803-2	
LOG 0051 FRAME 01	
P.N. 2736180	
IBM CORP. SDD BLK. GR	

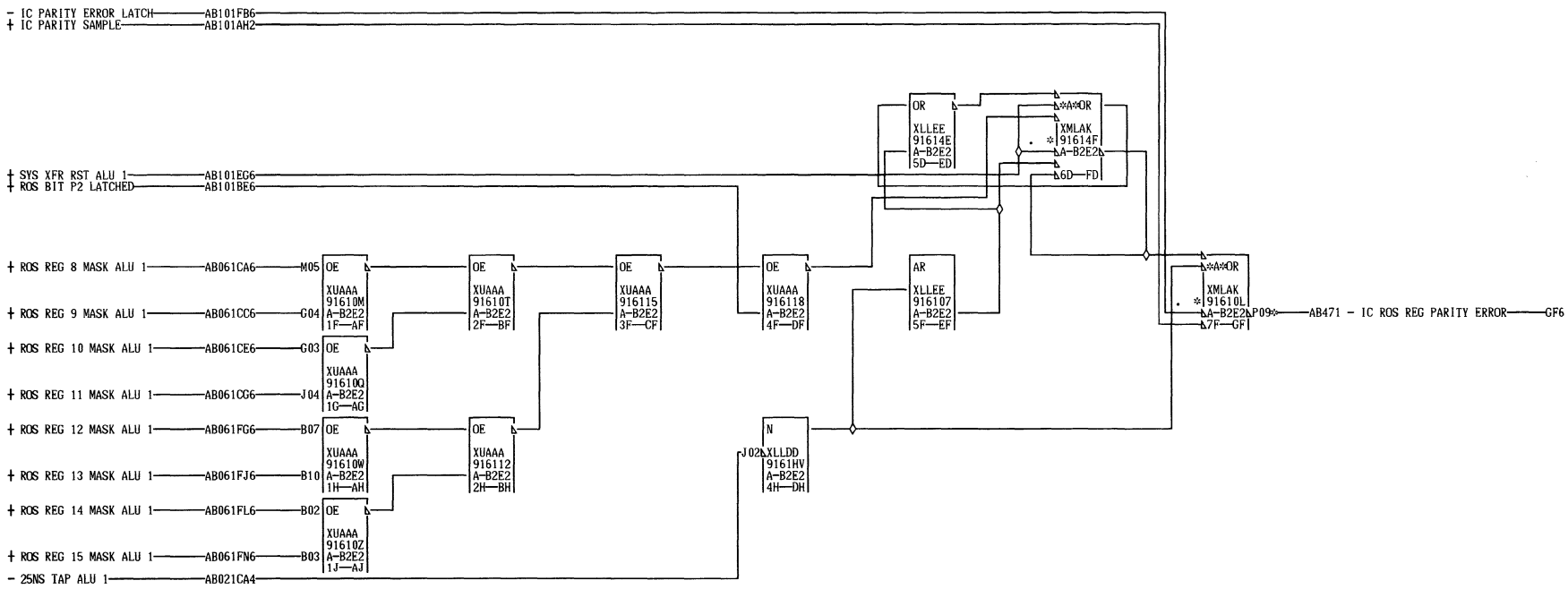

GF6 A-B2A4D10
01A-A2V4D10

07-17-73 734098

TRANSFER PARITY CHECK ALU 1			
DATE 08-18-81	MACH. 3803-2		
LOG 0051	FRAME 01		
	P.N. 2736181		
IBM CORP.	BLK. GJ		

A B 1 9 1 000

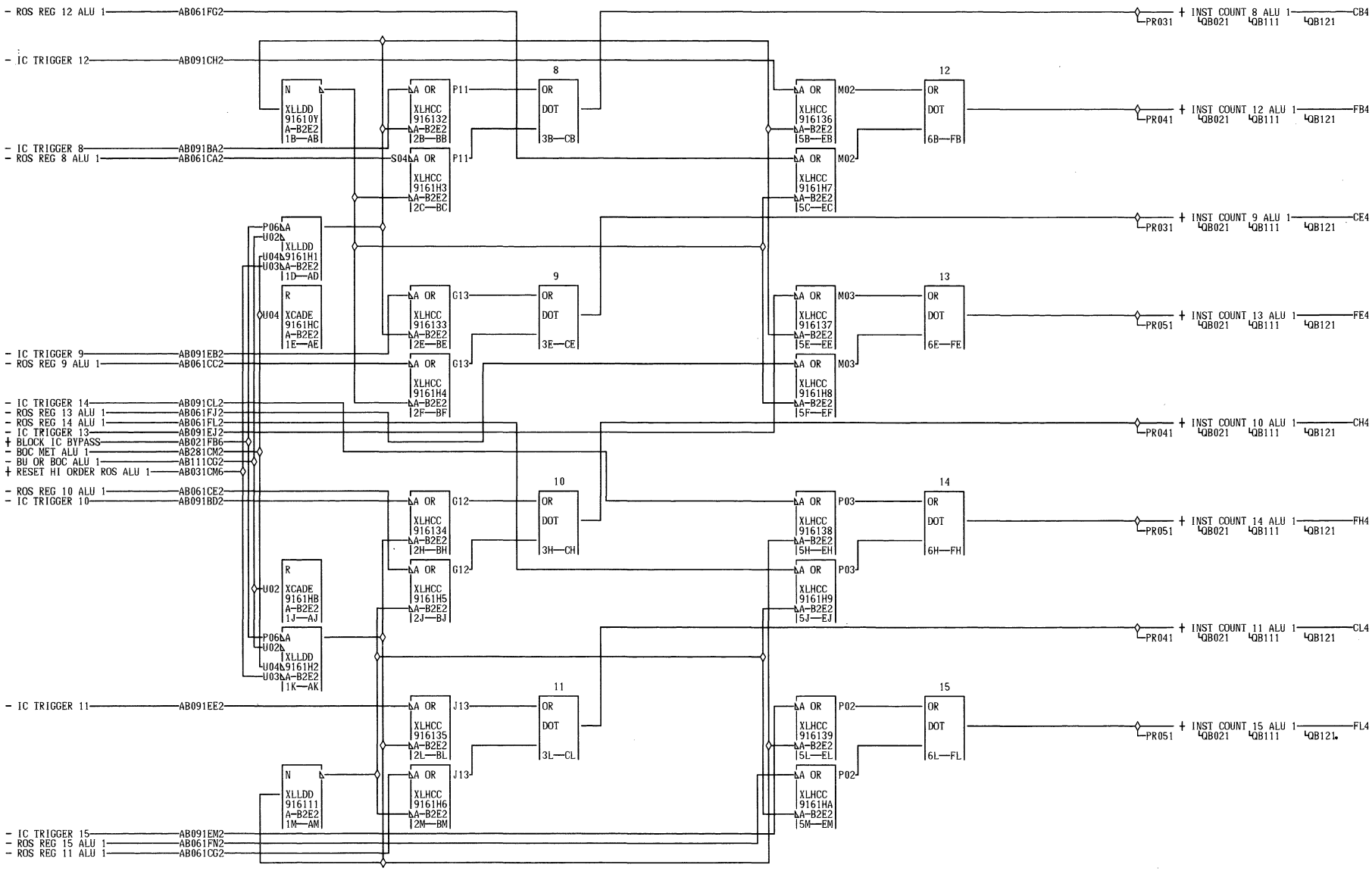

07-17-73 734098
12-06-73 734879

INSTRUCTION COUNT GATING ALU 1			
DATE	01-11-74	MACH. 3803-2	
LOG	0045	FRAME	01
		P.N.	2736182
IBM CORP.		BLK.	FM

A B 1 9 5 000

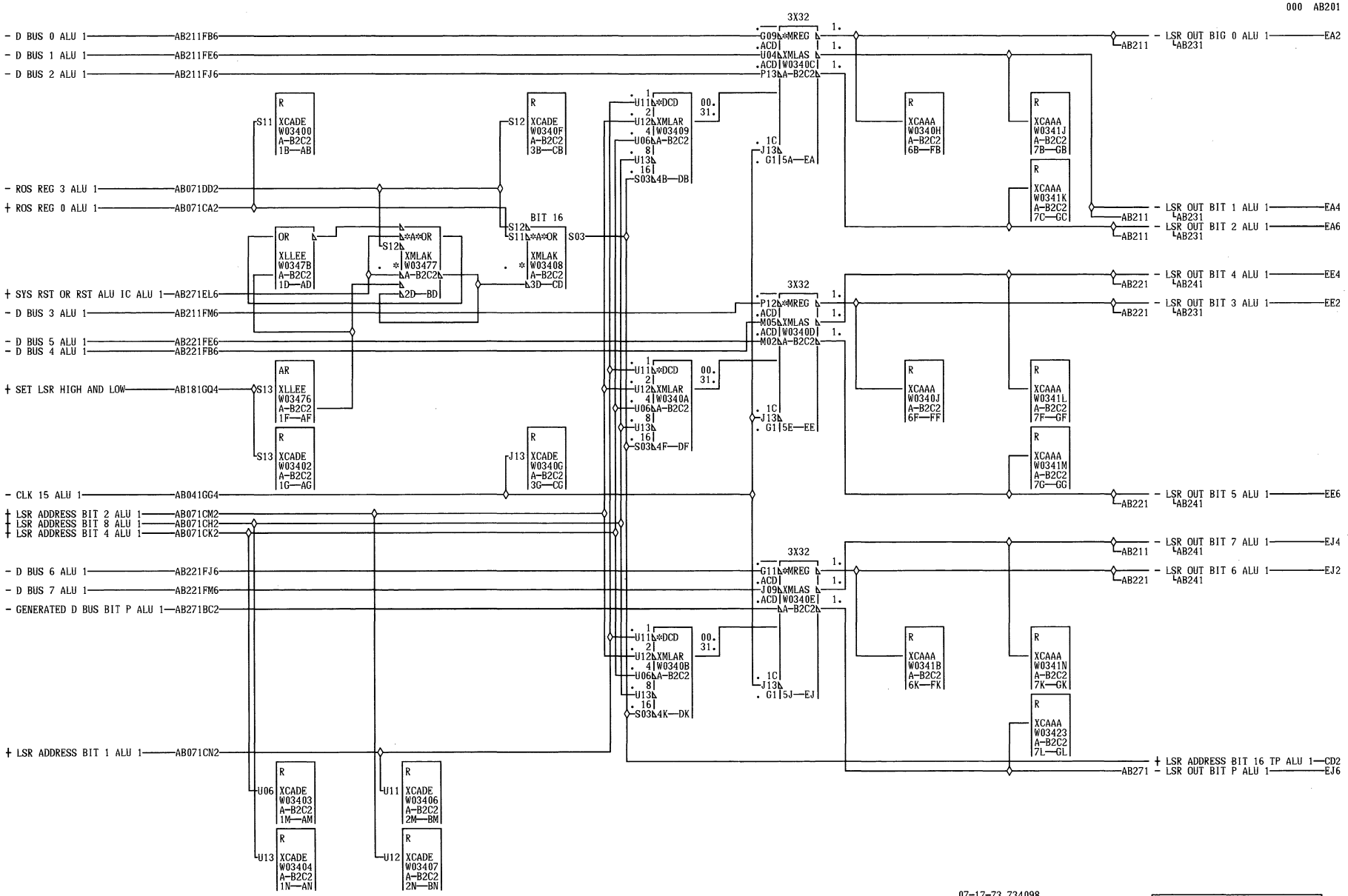

07-17-73 734098

	32 LSRS ALU 1	
DATE	08-08-73 MACH. 3803-2	
LOG	0051 FRAME 01	
	P.N. 2736183	
IBM CORP.	SDD BLK. GM	

AB201 000

AB201 000

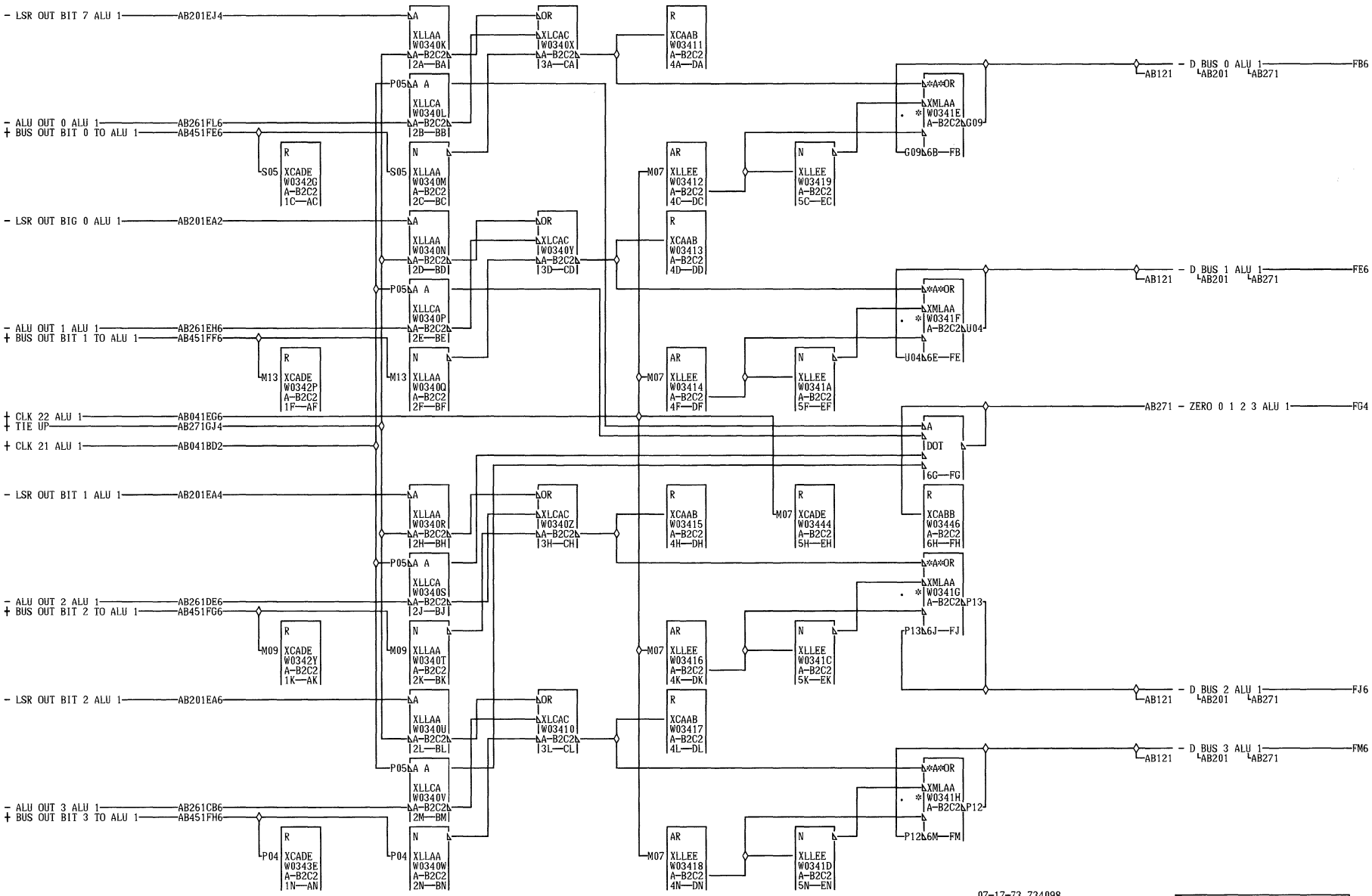

07-17-73 734098

ALU D BUS REG 0 1 2 3 ALU 1	
DATE 08-08-73 MACH. 3803-2	
LOG 0051 FRAME 01	
P.N. 2736184	
IBM CORP. SDD BLK. FN	

A B 2 1 1 000

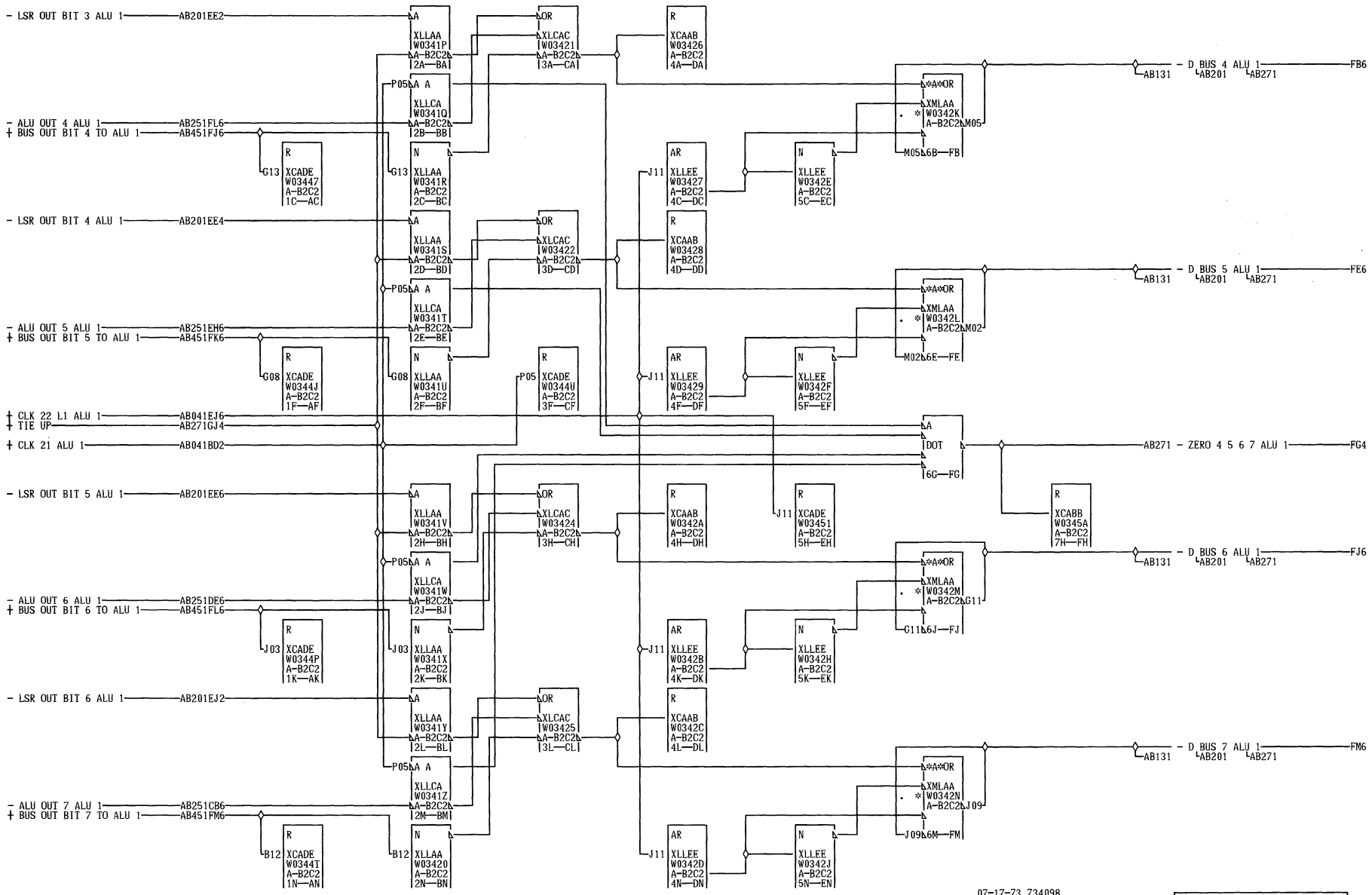

07-17-73 734098

ALU D BUS REG 4 5 6 7 ALU 1	
DATE 08-08-73 MACH. 3803-2	
LOG 0051 FRAME 01	
P.N. 2736185	
IBM CORP. SDD BLK. FN	

A B 2 2 1 000

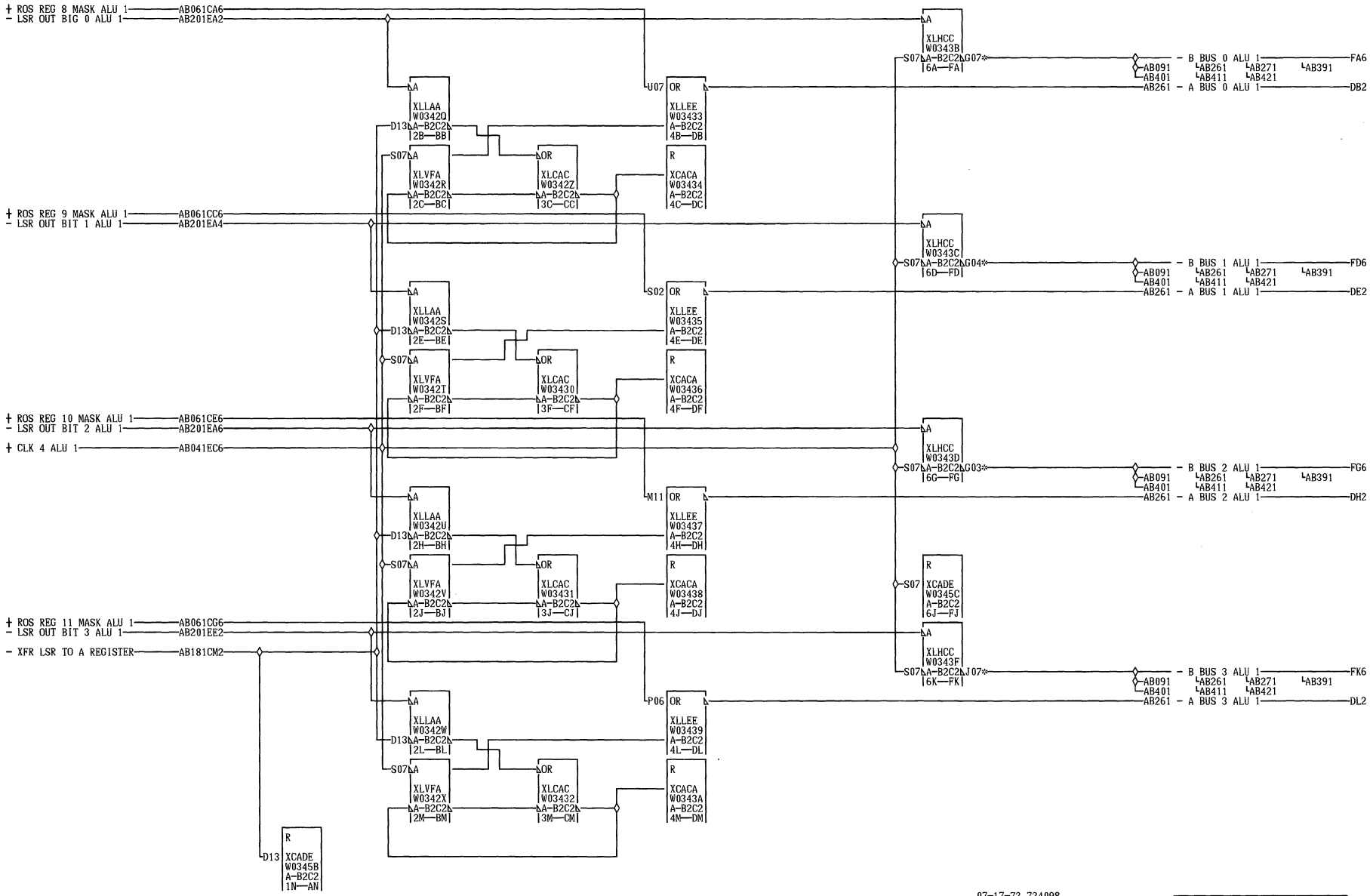

07-17-73 734098

FA6 A-B2A4D11
01A-A2V4D11
FD6 A-B2A4D13
01A-A2V4D13
FG6 A-B2A5D02
01A-A2V5D02
FK6 A-B2A5D03
01A-A2V5D03

A REG AND B REG 0 1 2 3
ALU 1
DATE 08-08-73 MACH. 3803-2
LOG 0051 FRAME 01
P.N. 2736186
IBM CORP. SDD BLK. FL

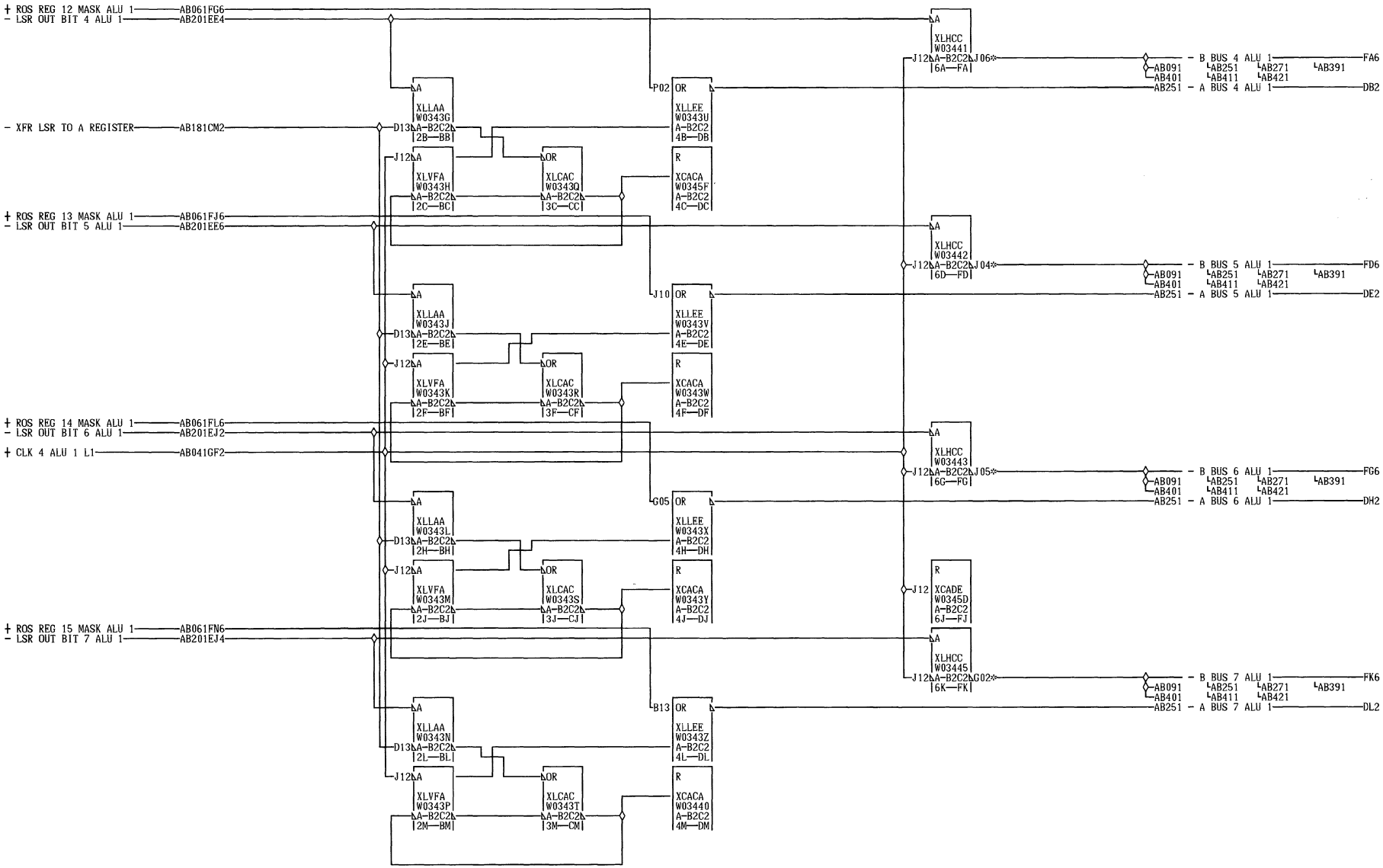

07-17-73 734098

A	FA6 A-B2A5D05
B	01A-A2V5D05
2	FD6 A-B2A5D06
4	01A-A2V5D06
1	FG6 A-B2A5D07
	01A-A2V5D07
000	FK6 A-B2A5D09
	01A-A2V5D09

A REG AND B REG 4 5 6 7
ALU 1

DATE 08-08-73 MACH. 3803-2

LOG 0051 FRAME 01

P.N. 2736187

IBM CORP. SDD BLK. FL

A B 2 4 1 000

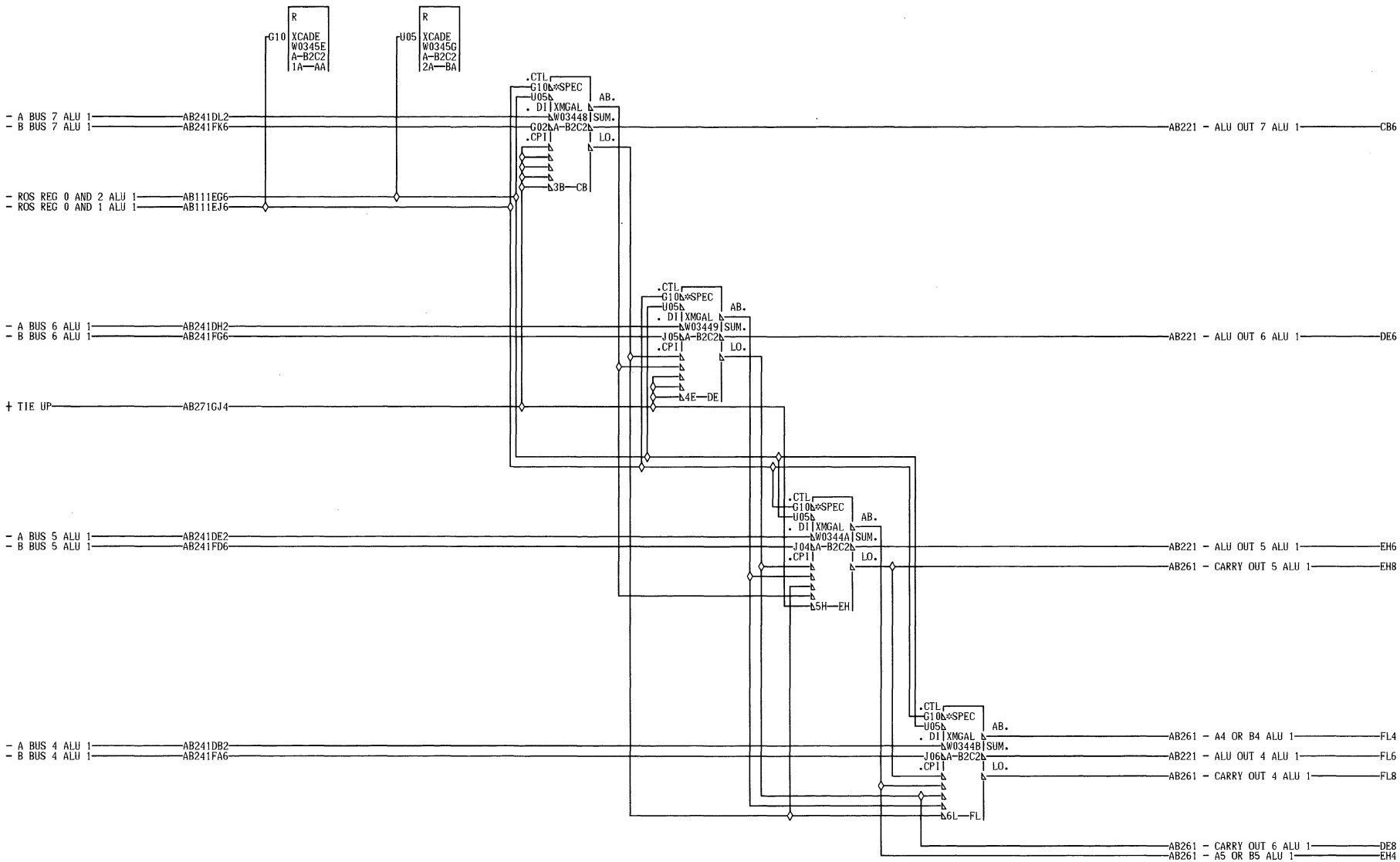

07-17-73 734098
12-06-73 734879

A B 2 5 1	ALU 7 THRU 4 ALU 1	A B 2 5 1
DATE	01-11-74 MACH. 3803-2	
LOG	0045 FRAME 01	
	P.N. 2736188	
000 IBM CORP.	SDD BLK. FM	000

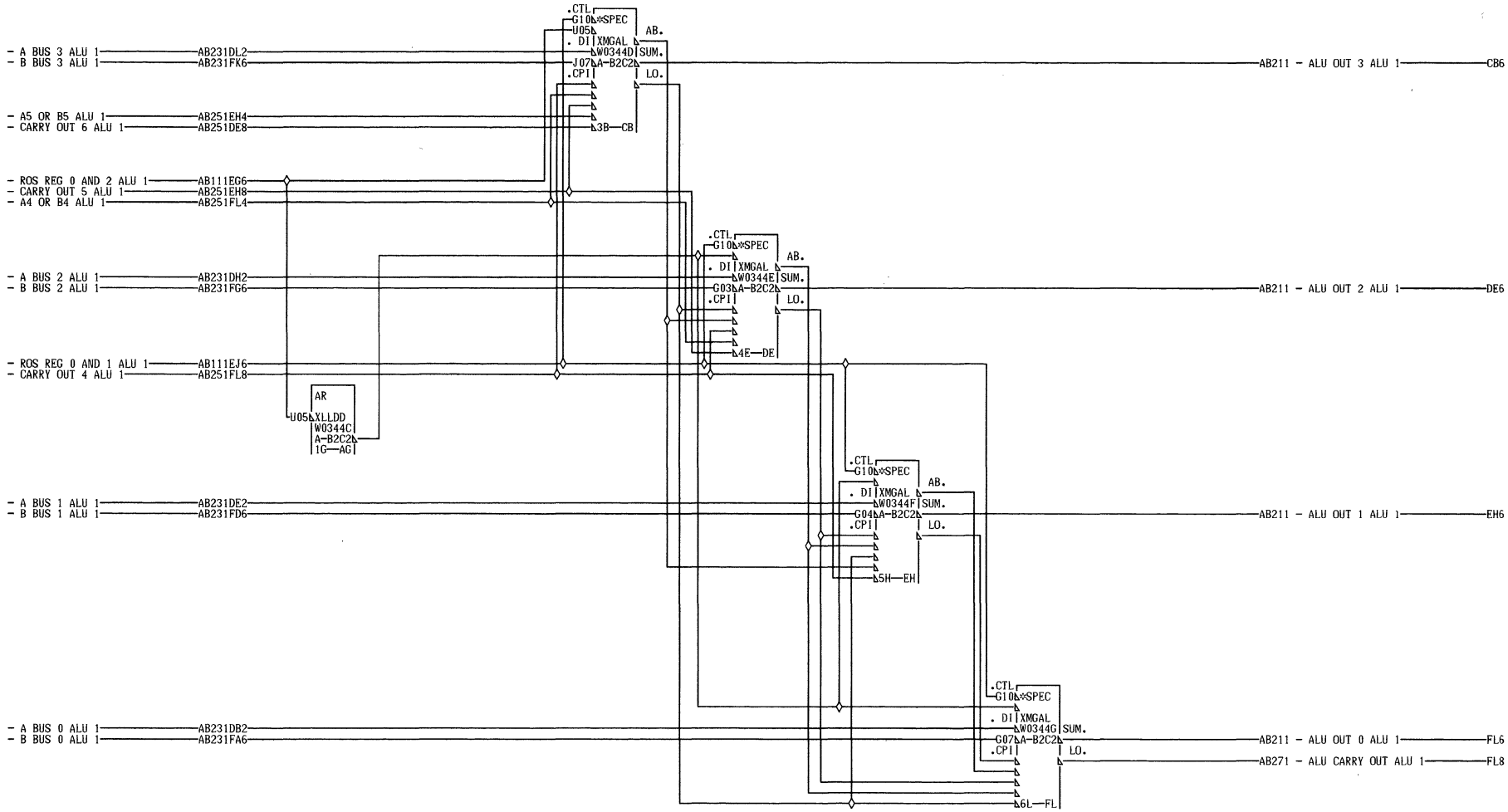

A
B
2
6
1

000

07-17-73 734098
12-06-73 734879

ALU 3 THRU 0 ALU 1				
DATE	01-11-74	MACH.	3803-2	
LOG	0045	FRAME	01	
		P.N.	2736189	
IBM CORP.	SDD BLK.		FM	

A
B
2
6
1

000

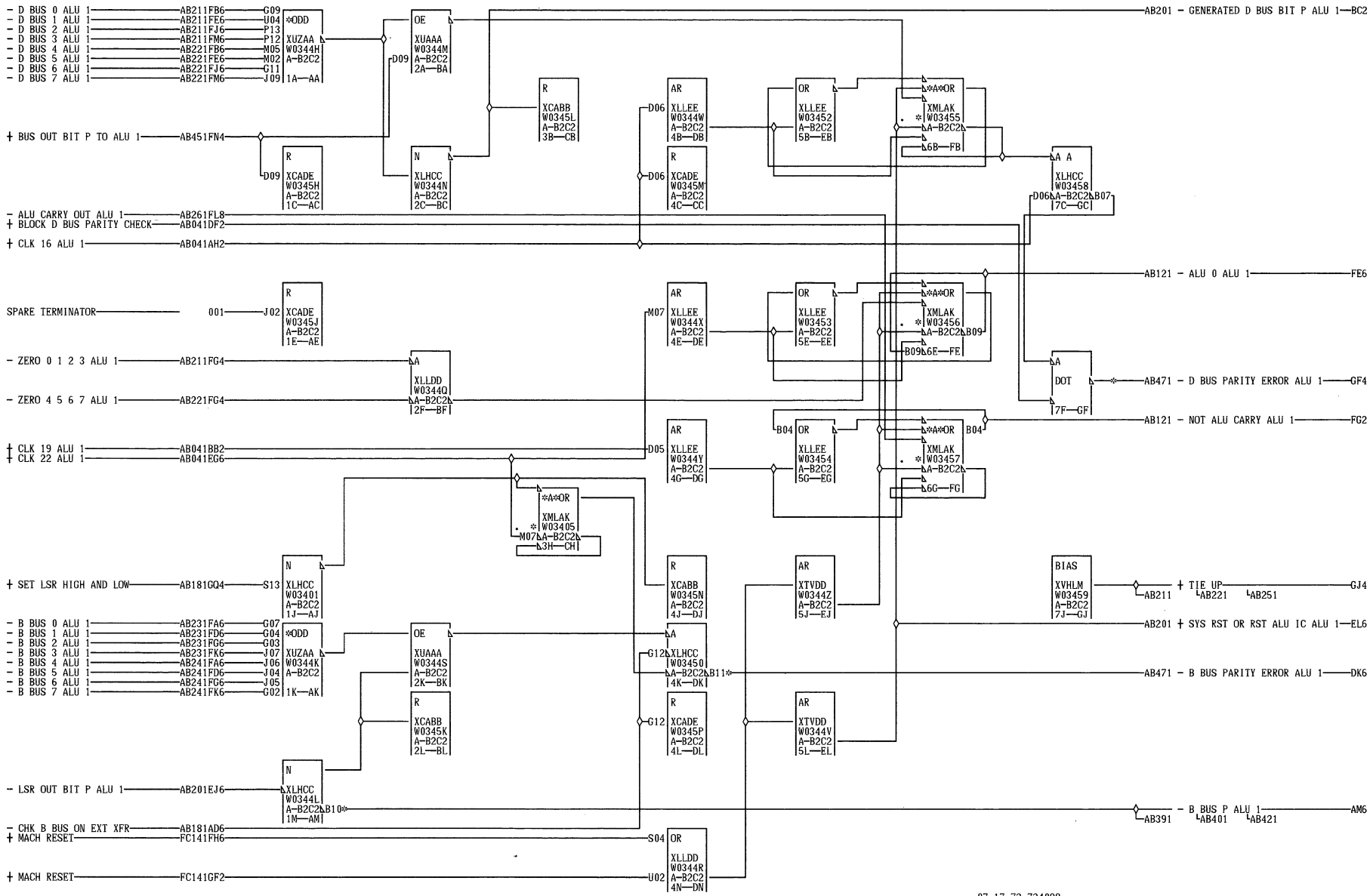

07-17-73 734098

A	AM6 A-B2A5D10
B	01A-A2V5D10
2	DK6 A-B2B2D10
7	01A-A2U2D10
1	GF4 A-B2A5D13
	01A-A2V5D13

000

D AND B BUS PARITY ERROR ALU 1		
DATE	08-08-73 MACH. 3803-2	
LOG	0051 FRAME 01	
	P.N. 2736190	
IBM CORP.	SDD BLK. GM	000

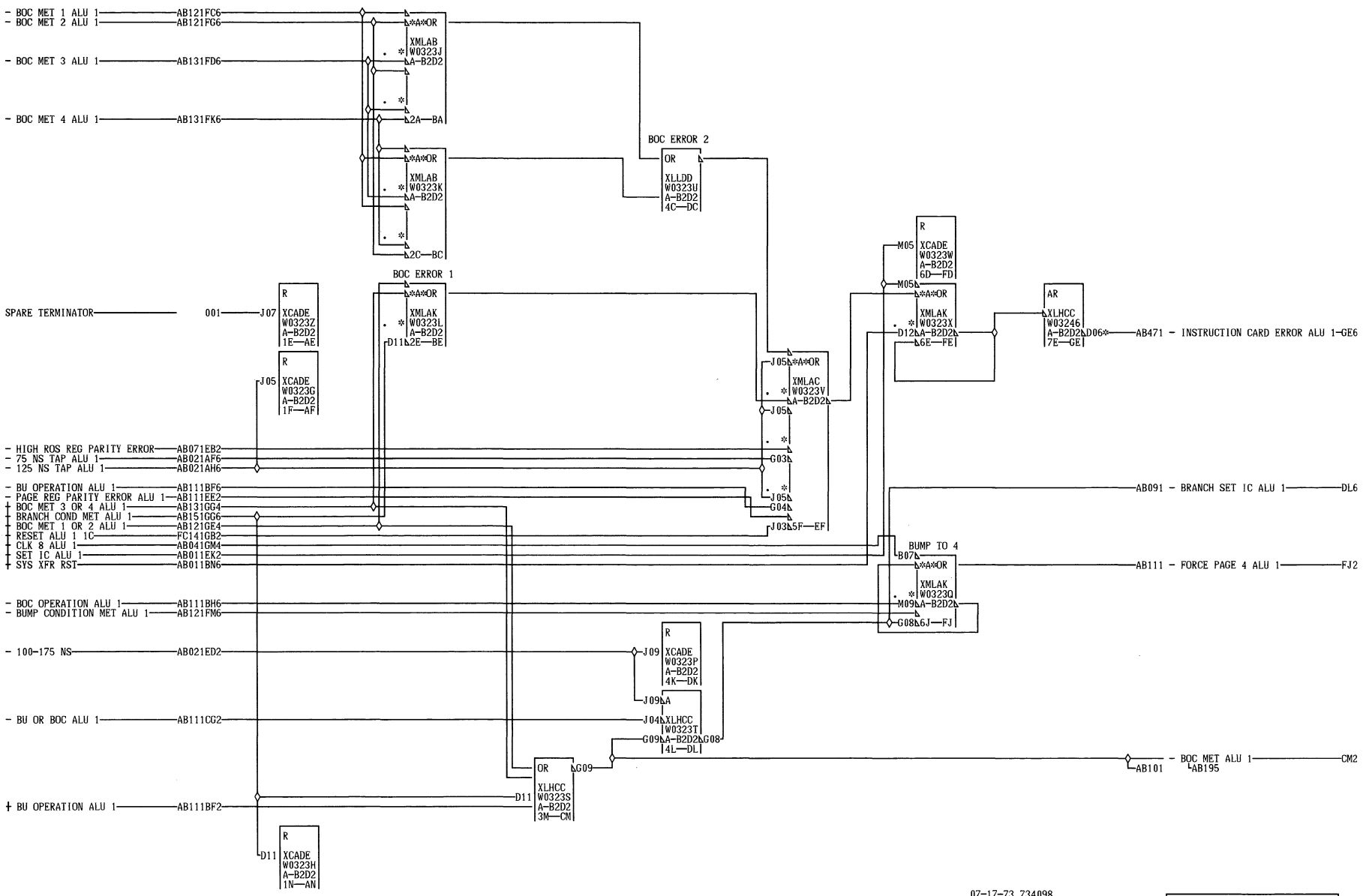
- BOC MET 1 ALU 1 AB121FC6
- BOC MET 2 ALU 1 AB121FG6
- BOC MET 3 ALU 1 AB131FD6
- BOC MET 4 ALU 1 AB131FK6
XMLAB W0323J A-B2D2
2A—BA
2C—BC
BOC ERROR 2
OR
XLLDD W0323U A-B2D2 4C—DC
BOC ERROR 1
XMLAK W0323L A-B2D2
D11 2E—BE
SPARE TERMINATOR 001 J07
R XCADE W0323Z A-B2D2 1E—AE
J05 XCADE W0323G A-B2D2 1F—AF
M05 XCADE W0323W A-B2D2 6D—FD
XMLAK W0323X A-B2D2 D12 6E—FE
AR XLHCC W03246 A-B2D2 D06 7E—GE
AB471 - INSTRUCTION CARD ERROR ALU 1 GE6
J05 XMLAC W0323V A-B2D2
J05 G03 G04 J03 5F—EF
- HIGH ROS REG PARITY ERROR AB071EB2
- 75 NS TAP ALU 1 AB021AF6
- 125 NS TAP ALU 1 AB021AH6
- BU OPERATION ALU 1 AB111BF6
- PAGE REG PARITY ERROR ALU 1 AB111EE2
+ BOC MET 3 OR 4 ALU 1 AB131GG4
+ BRANCH COND MET ALU 1 AB151GD6
+ BOC MET 1 OR 2 ALU 1 AB121GE4
+ RESET ALU 1 1C FC141GB2
+ CLK 8 ALU 1 AB041GM4
+ SET IC ALU 1 AB011EK2
+ SYS XFR RST AB011BN6
AB091 - BRANCH SET IC ALU 1 DL6
BUMP TO 4
B07
XMLAK W0323Q A-B2D2
M09 G08 6J—FJ
AB111 - FORCE PAGE 4 ALU 1 FJ2
- BOC OPERATION ALU 1 AB111BH6
- BUMP CONDITION MET ALU 1 AB121FM6
- 100-175 NS AB021ED2
J09 XCADE W0323P A-B2D2 4K—DK
J09 A XLHCC W0323T A-B2D2 G09 G08 4L—DL
- BU OR BOC ALU 1 AB111CG2
J04
OR G09
XLHCC W0323S A-B2D2 3M—CM
D11
AB101 - BOC MET ALU 1 AB195 CM2
+ BU OPERATION ALU 1 AB111BF2
D11 R XCADE W0323H A-B2D2 1N—AN
GE6 A-B2A3D02
01A-A2V3D02
07-17-73 734098
A B 2 8 1 000
INSTRUCTION CARD ERROR
ALU 1
DATE 08-08-73 MACH. 3803-2
LOG 0051 FRAME 01
P.N. 2736191
IBM CORP. SDD BLK. GF
A B 2 8 1 000

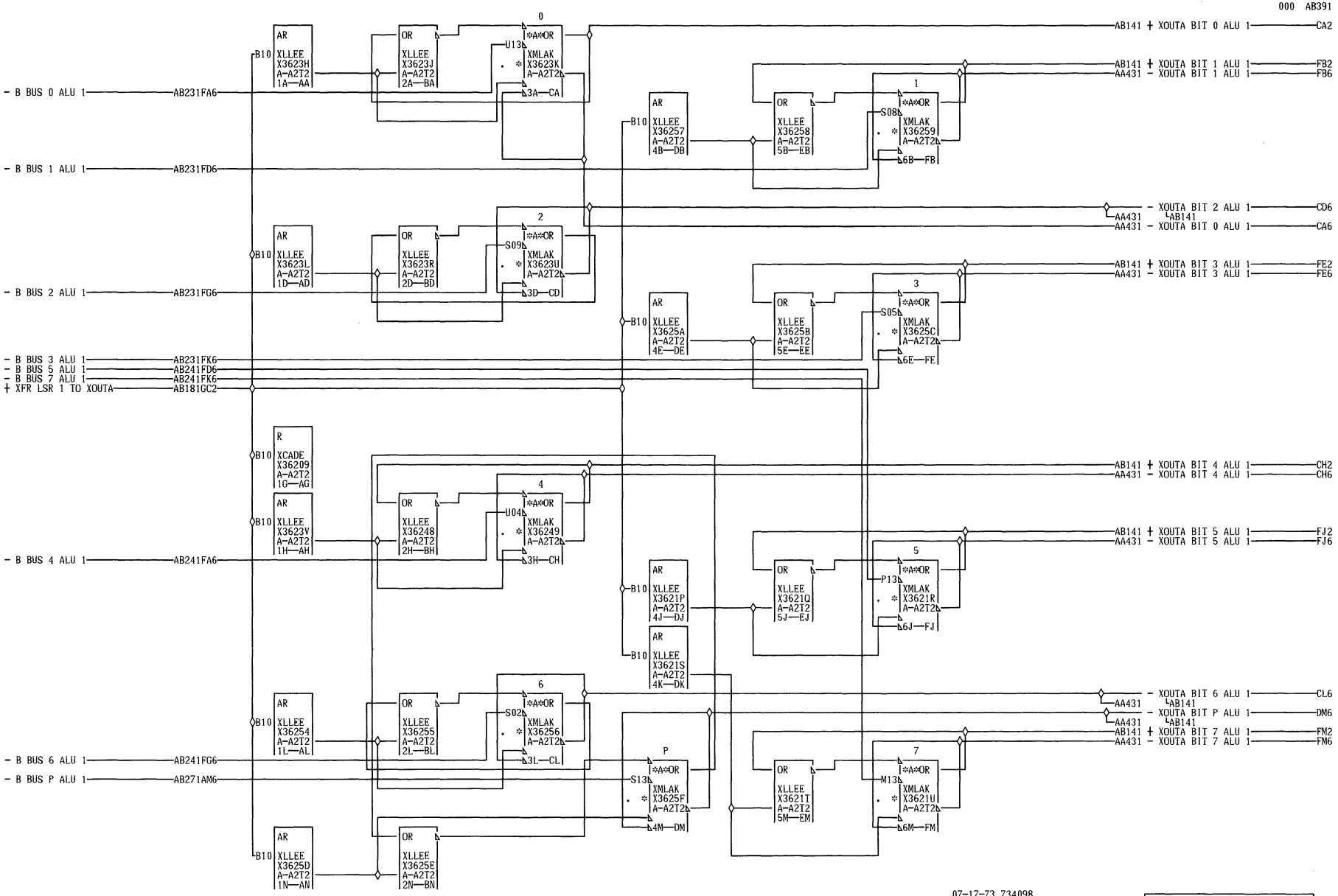

07-17-73 734098
12-06-73 734879

CROSSOVER REG XOUT A ALU 1	
DATE 01-11-74 MACH. 3803-2	
LOG 0055 FRAME 01	
P.N. 2736192	
IBM CORP. SDD BLK. FN	

AB391 000

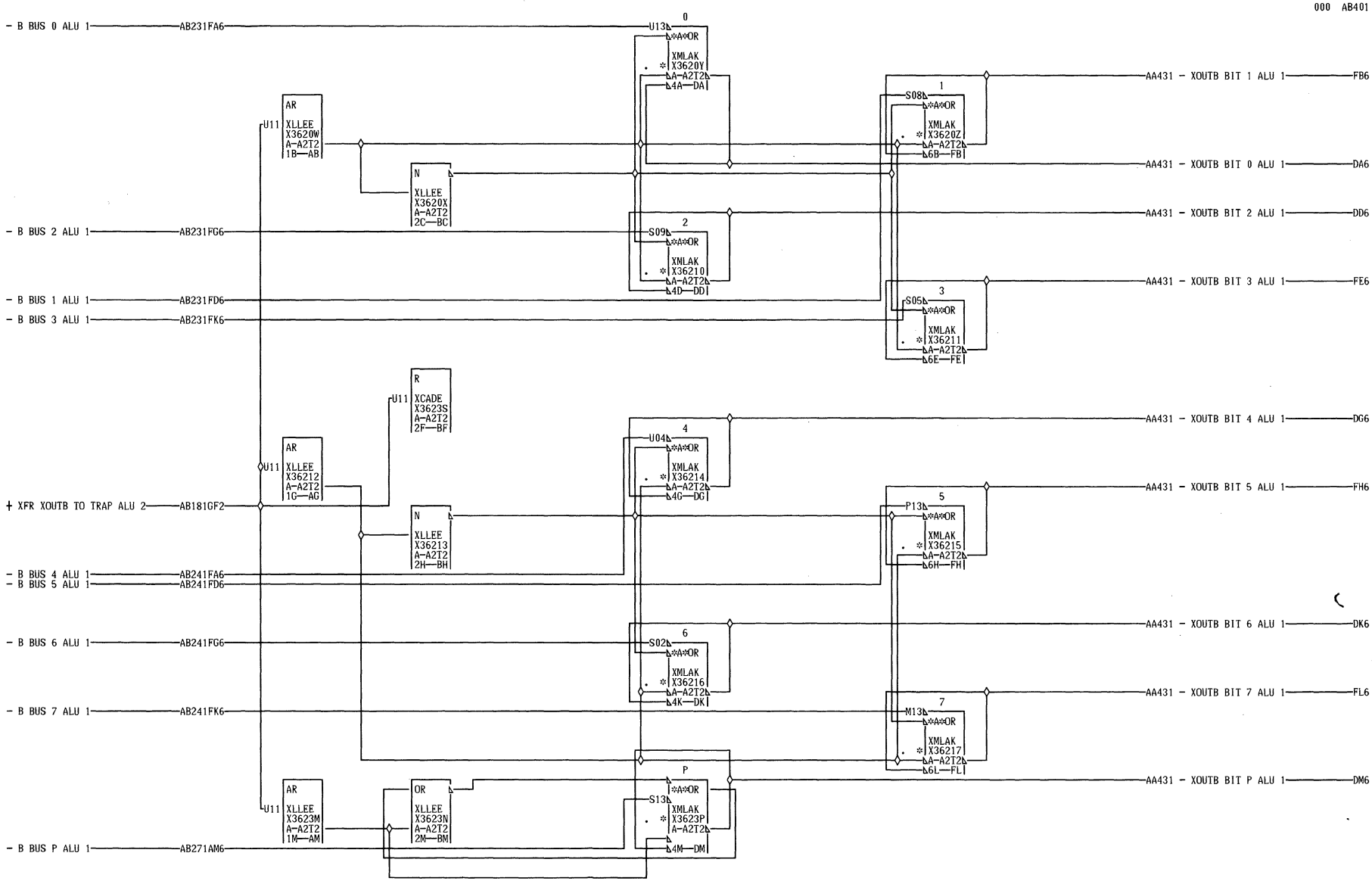

07-17-73 734098
12-06-73 734879

CROSSOVER REG XOUT B ALU 1	
DATE 01-11-74 MACH. 3803-2	
LOG 0055 FRAME 01	
P.N. 2736193	
IBM CORP. SDD BLK. FM	

A B 4 0 1 000

A B 4 0 1 000

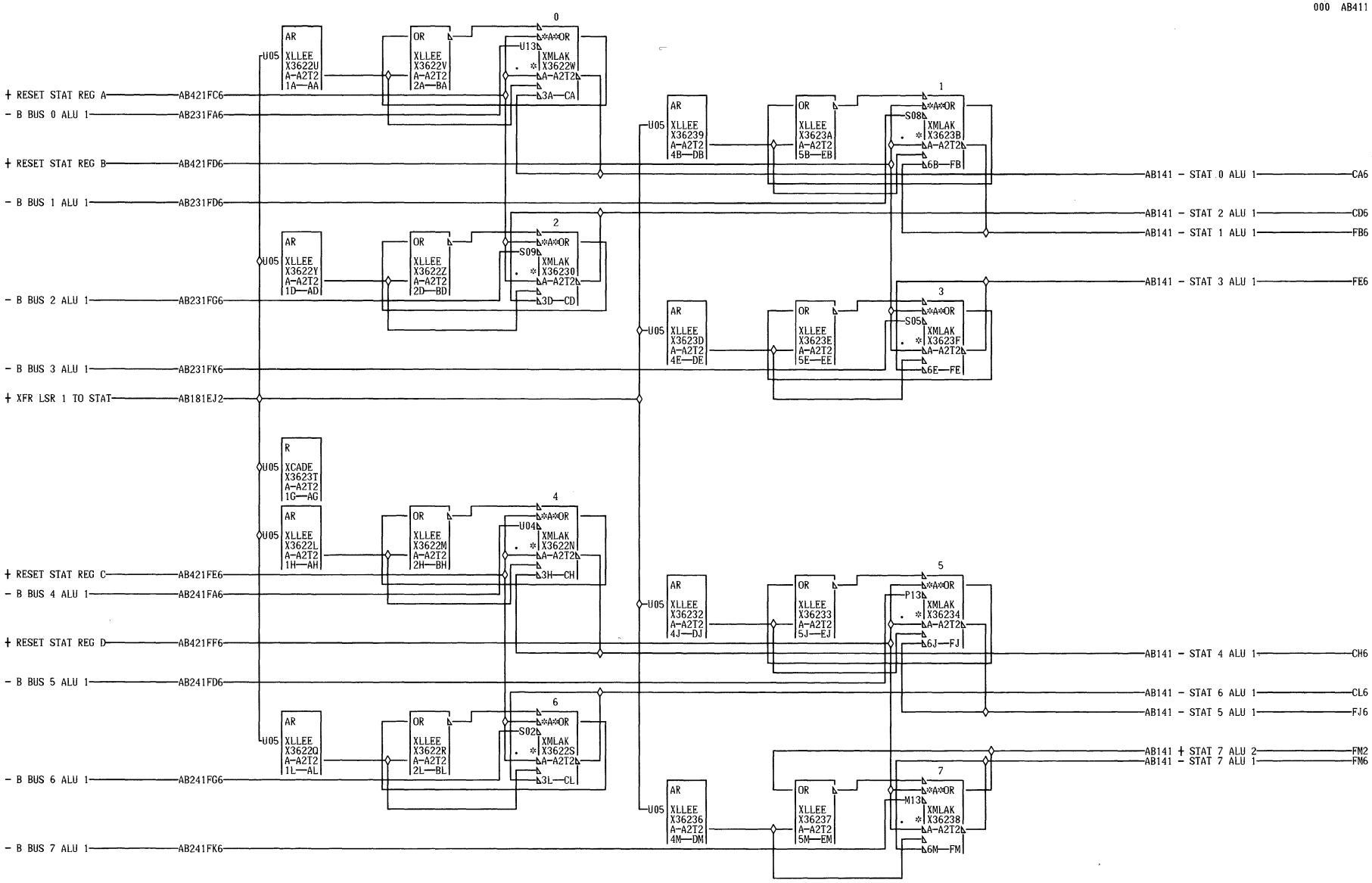

07-17-73 734098
12-06-73 734879

STAT REGISTER ALU 1			
DATE	01-11-74	MACH. 3803-2	
LOG	0045	FRAME	01
		P.N.	2736194
IBM CORP.	SDD BLK.		FN

A B 4 1 1 000

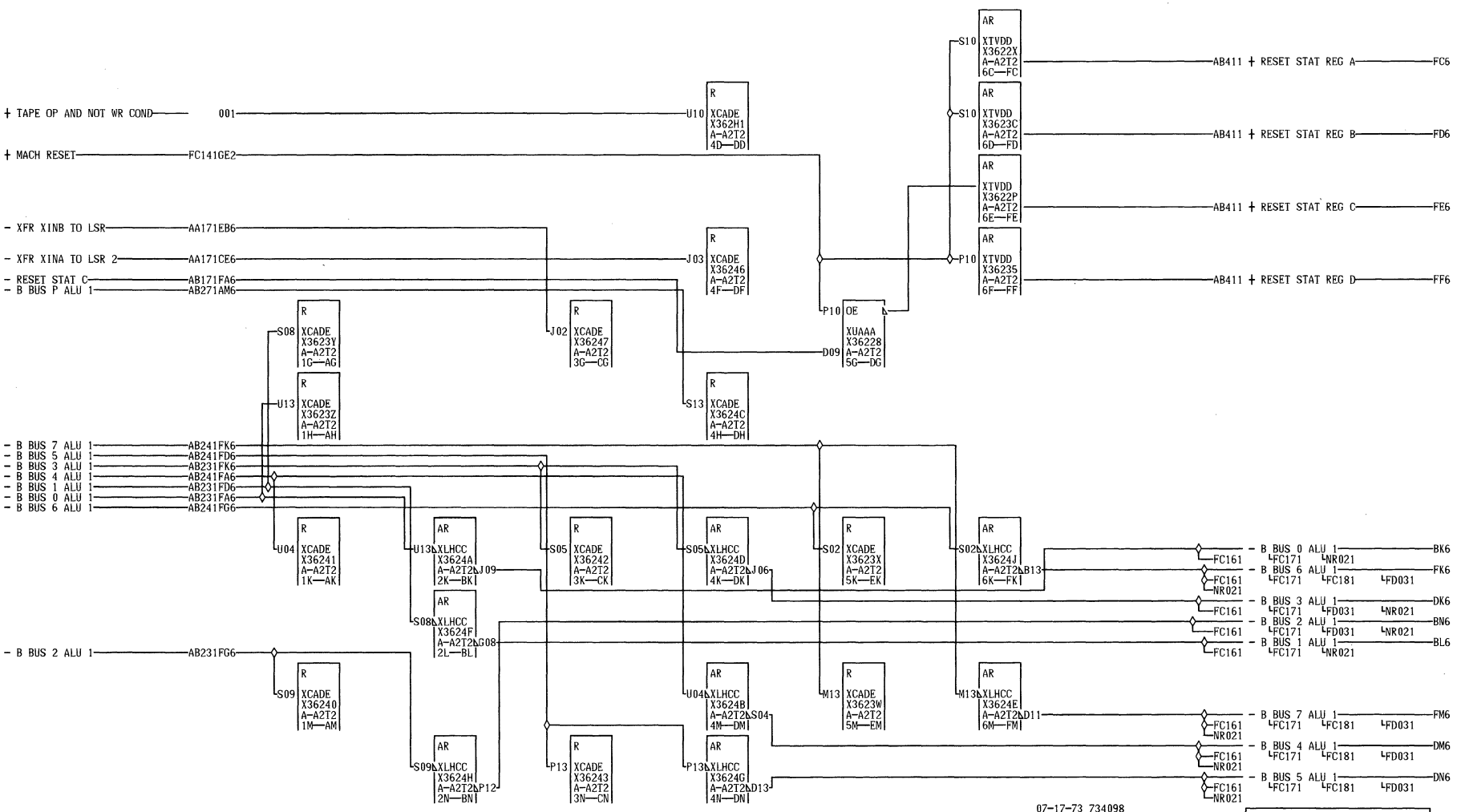
+ TAPE OP AND NOT WR COND
001
U10 R XCADE X362H1 A-A2T2 4D—DD
+ MACH RESET
FC141GE2
S10 AR XTVDD X3622X A-A2T2 6C—FC
AB411 + RESET STAT REG A
FC6
S10 AR XTVDD X3623C A-A2T2 6D—FD
AB411 + RESET STAT REG B
FD6
AR XTVDD X3622P A-A2T2 6E—FE
AB411 + RESET STAT REG C
FE6
P10 AR XTVDD X36235 A-A2T2 6F—FF
AB411 + RESET STAT REG D
FF6
- XFR XINB TO LSR
AA171EB6
- XFR XINA TO LSR 2
AA171CE6
J03 R XCADE X36246 A-A2T2 4F—DF
- RESET STAT C
AB171FA6
- B BUS P ALU 1
AB271AM6
P10 OE XUAAA X36228 A-A2T2 5G—DG
D09
S08 R XCADE X3623Y A-A2T2 1G—AG
J02 R XCADE X36247 A-A2T2 3G—CG
U13 R XCADE X3623Z A-A2T2 1H—AH
S13 R XCADE X3624C A-A2T2 4H—DH
- B BUS 7 ALU 1
AB241FK6
- B BUS 5 ALU 1
AB241FD6
- B BUS 3 ALU 1
AB231FK6
- B BUS 4 ALU 1
AB241FA6
- B BUS 1 ALU 1
AB231FD6
- B BUS 0 ALU 1
AB231FA6
- B BUS 6 ALU 1
AB241FG6
U04 R XCADE X36241 A-A2T2 1K—AK
U13 AR XLHCC X3624A A-A2T2 2K—BK J09
S05 R XCADE X36242 A-A2T2 3K—CK
S05 AR XLHCC X3624D A-A2T2 4K—DK J06
S02 R XCADE X3623X A-A2T2 5K—EK
S02 AR XLHCC X3624J A-A2T2 6K—FK B13
- B BUS 0 ALU 1
FC161 FC171 NR021
BK6
- B BUS 6 ALU 1
FC161 FC171 FC181 FD031 NR021
FK6
- B BUS 3 ALU 1
FC161 FC171 FD031 NR021
DK6
- B BUS 2 ALU 1
FC161 FC171 FD031 NR021
BN6
- B BUS 1 ALU 1
FC161 FC171 NR021
BL6
S08 AR XLHCC X3624F A-A2T2 2L—BL G08
- B BUS 2 ALU 1
AB231FG6
S09 R XCADE X36240 A-A2T2 1M—AM
U04 AR XLHCC X3624B A-A2T2 4M—DM S04
M13 R XCADE X3623W A-A2T2 5M—EM
M13 AR XLHCC X3624E A-A2T2 6M—FM D11
- B BUS 7 ALU 1
FC161 FC171 FC181 FD031 NR021
FM6
- B BUS 4 ALU 1
FC161 FC171 FC181 FD031 NR021
DM6
- B BUS 5 ALU 1
FC161 FC171 FC181 FD031 NR021
DN6
S09 AR XLHCC X3624H A-A2T2 2N—BN P12
P13 R XCADE X36243 A-A2T2 3N—CN
P13 AR XLHCC X3624G A-A2T2 4N—DN D13
07-17-73 734098
12-06-73 734879
RESETS ALU 1
DATE 01-11-74 MACH. 3803-2
LOG 0067 FRAME 01
P.N. 2736195
IBM CORP. SDD BLK. GN
A B 4 2 1 000

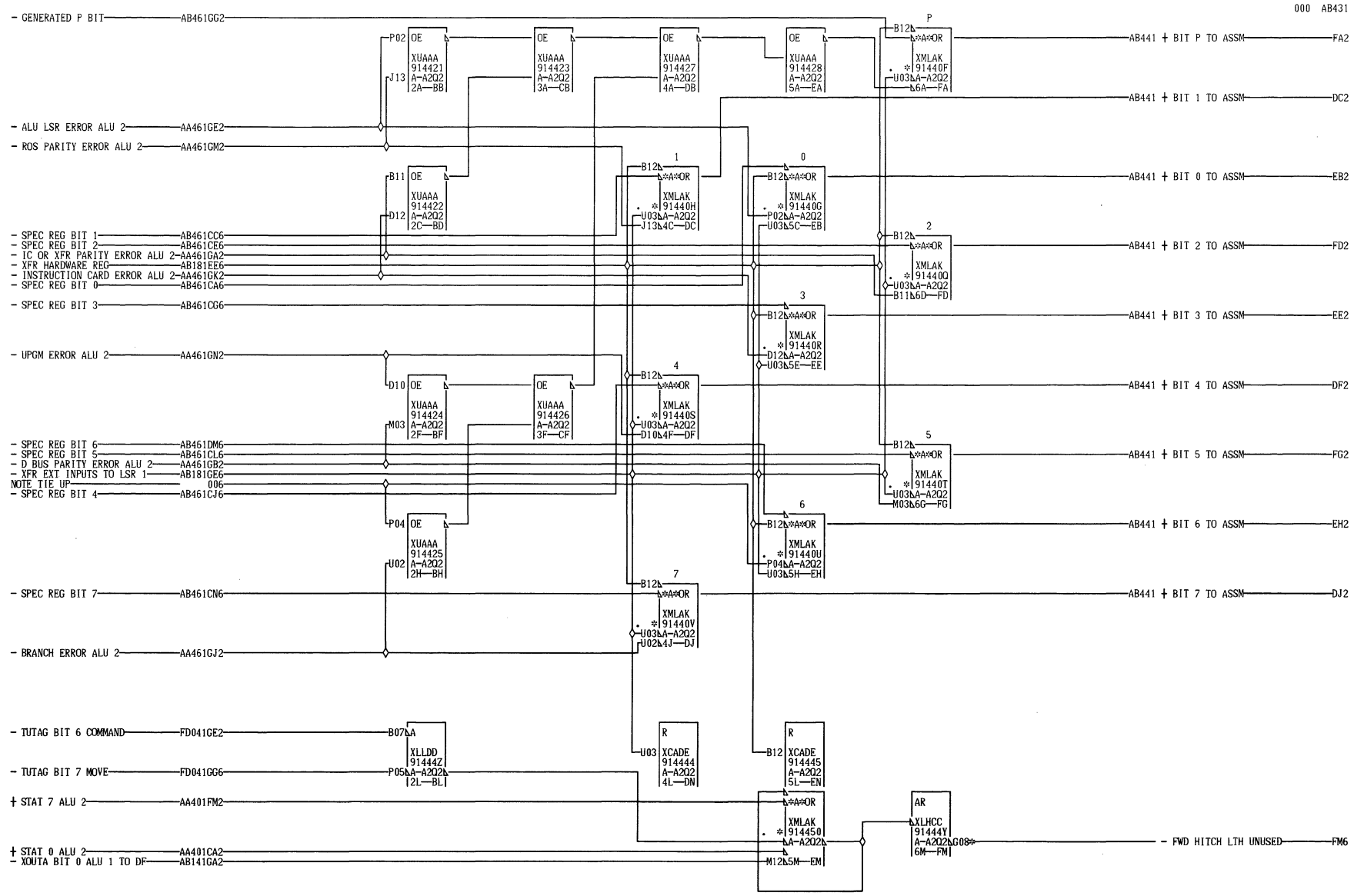

NOTE TIE UP NET 006
ON BOARD. USE P/N 2520936
A BETWEEN A-A2Q2P04 AND A-A2Q2P08

FM6 A-A2G1A11
01A-A1G6A02

07-17-73 734098

ASSEMBLER ALU 1 IN
DATE 08-18-81 MACH. 3803-2
LOG 0051 FRAME 01
P.N. 2736196
IBM CORP. SDD BLK. FN

000

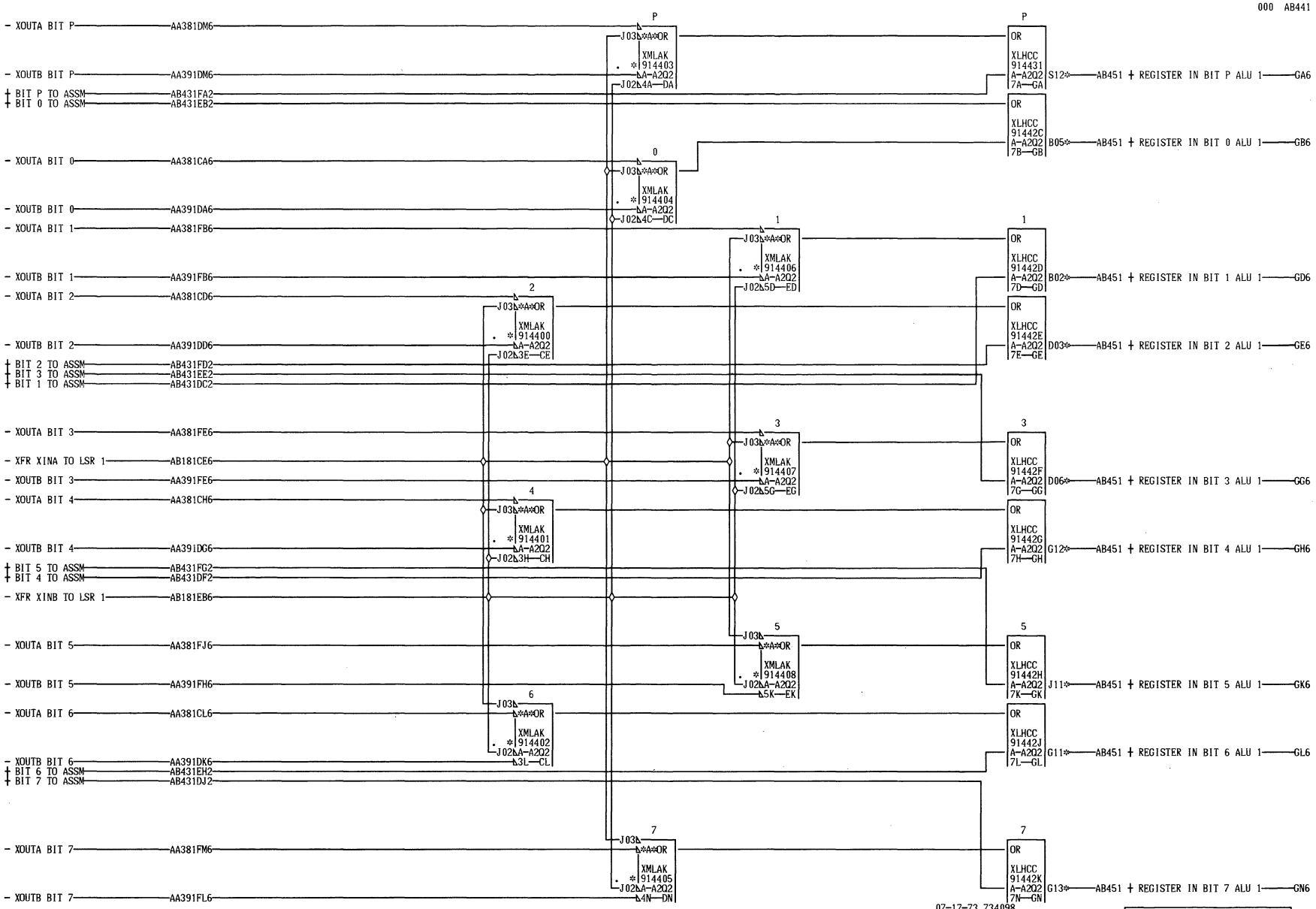

07-17-73 734098

GA6 A-A2V3B02 01A-B2A3B08
01A-B2A3B02 GH6 A-A2V3B09
GB6 A-A2V3B04 01A-B2A3B09
01A-B2A3B04 GK6 A-A2V3B10
GD6 A-A2V3B05 01A-B2A3B10
01A-B2A3B05 GL6 A-A2V3B12
GE6 A-A2V3B06 01A-B2A3B12
01A-B2A3B06 GN6 A-A2V3B13
GG6 A-A2V3B08 01A-B2A3B13

ALU REGISTERS GATING
ALU 1 INPUT
DATE 08-18-81 MACH. 3803-2
LOC 0051 FRAME 01
P.N. 2736197
IBM CORP. SDD BLK. GP

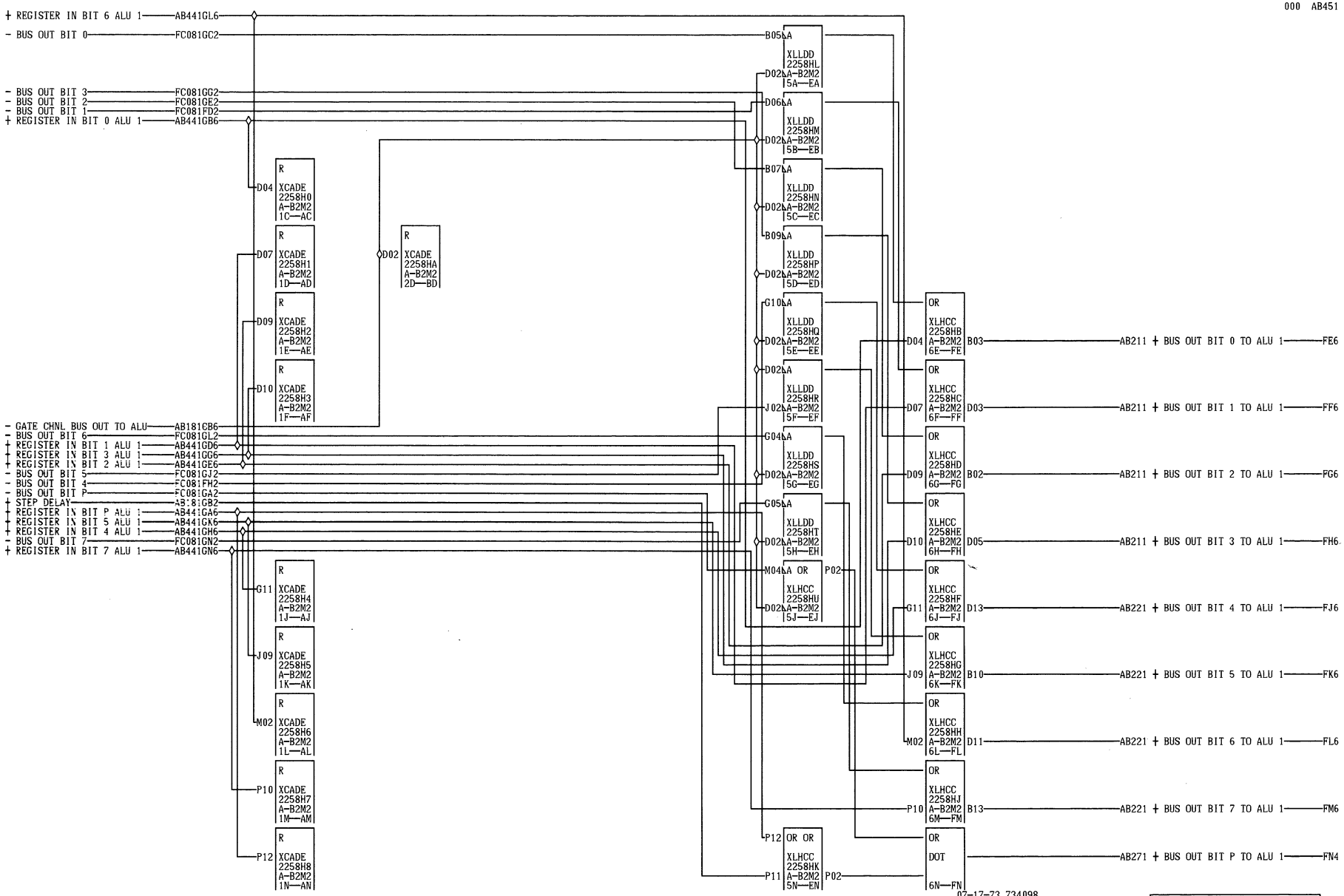

BUS OUT GATE TO ALU 1			
DATE 08-08-73	MACH. 3803-2		
LOG 0051	FRAME 01		
	P.N. 2736198		
IBM CORP. CO	BLK. GP		

A B 4 5 1 000

A B 4 5 1 000

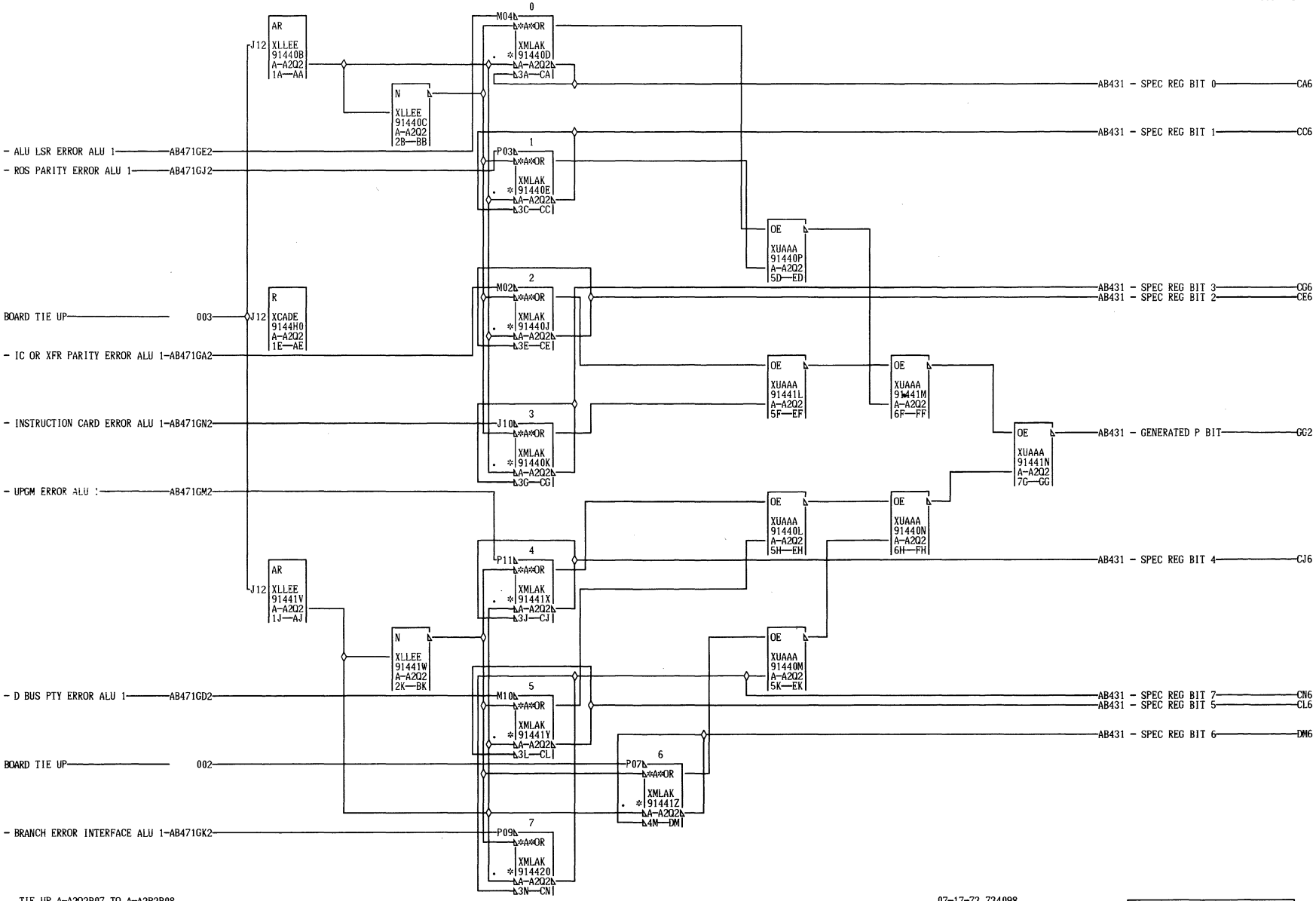

TIE UP A-A2Q2P07 TO A-A2P2P08
AND A-A2Q2J12 TO A-A2Q2J08
A WITH P/N 2520936
B
4
6
1

000

07-17-73 734098

SPECIAL REGISTER TU BUS IN OR HDWR ERRORS			A
DATE 08-18-81 MACH. 3803-2			B
			4
LOG	0051 FRAME	01	6
			1
	P.N. 2736199		
IBM CORP.	SDD BLK.	GH	000

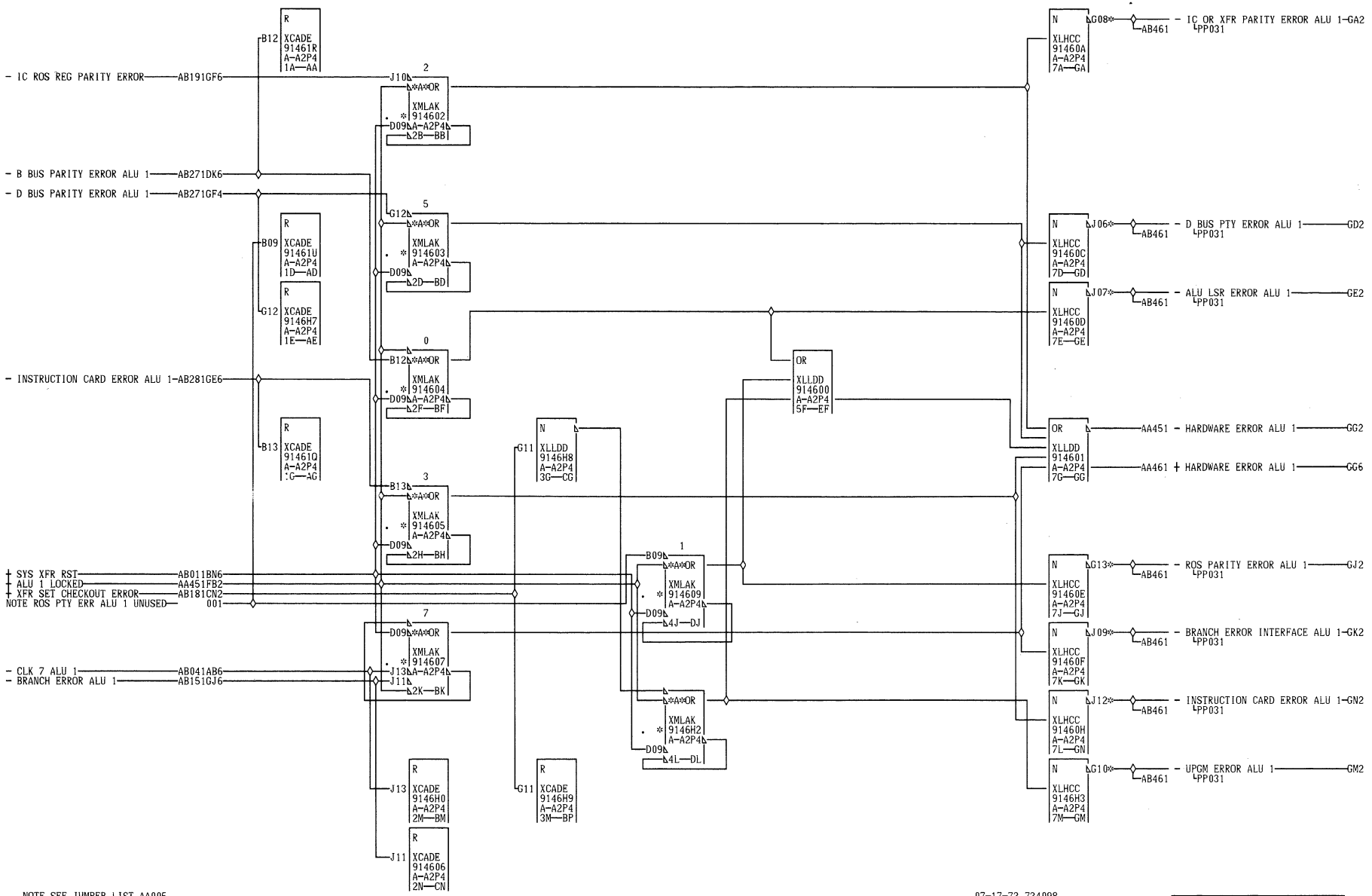

NOTE SEE JUMPER LIST AA005

GA2 A-A2B2D05 01A-A1A5D10
01A-A1A5D05 GM2 A-A2M1C13
GD2 A-A2B2D06 01A-A1M6C04
01A-A1A5D06 GN2 A-A2B2D11
GE2 A-A2B2D07 01A-A1A5D11
01A-A1A5D07
GJ2 A-A2B2D09
01A-A1A5D09
GK2 A-A2B2D10

07-17-73 734098

HARDWARE ERROR LATCHES ALU 1	
DATE 08-08-73 MACH. 3803-2	
LOG 0051 FRAME 01	
P.N. 2736200	
IBM CORP. SDD BLK. GP	