MAINTENANCE INSTRUCTIONS

i200

Infoton

INFOTON • SECOND AVENUE, BURLINGTON, MASSACHUSETTS 01803 • AREA CODE 617 272-6660

MAINTENANCE INSTRUCTIONS

I200

Price $20.00

Additional copies can be obtained by ordering Manual No. 03232 from INFOTON, INCORPORATED.

Second Avenue

Burlington, Massachusetts 01803

JULY, 1977

TABLE OF CONTENTS

		Page No.
1.	SPECIFICATIONS	2
1.1	Basic System	2
1.2	Standard Interface	2
1.3	Options	3
2.	OPERATING INSTRUCTIONS	5
2.1	Operator Controls, Front	5
2.2	Keyboard and Code Set	6
2.3	I200 TV Monitor Controls	7
2.4	Rear Panel Controls	8
2.5	Initial Setup	10
3.	THEORY OF OPERATION	13
3.1	Keyboard Assembly	13
3.2	Control Logic Printed Circuit Assembly	13
3.3	Auxiliary Devices	19
3.4	Video Monitor	19
3.5	Printer Copy Mode Output	19
4.	SERVICE	21
4.1	Mechanical Access to the Unit	21
4.2	Video Monitor Adjustments	21
4.3	Power Supply Adjustments	21
4.4	Optional Jumpers	23
4.5	Ordering Replacement and Spare Parts	24
5.	TROUBLESHOOTING AND FAULT LOCATION	25
5.1	I200 Terminal Self Check	25
5.2	Subassembly Functions	25
5.3	Troubleshooting	26
5.4	Fault Location	27
6.	DRAWINGS	29
6.1	Mnemonics List	29
6.2	Schematic Main Logic Including Power Supply	29
6.3	Keyboard Schematics	29
	APPENDIX	A-1

TABLE OF CONTENTS — Continued

LIST OF FIGURES

		Page No.
Figure 1.	INFOTON I200	1
Figure 2.	ASCII Character Set	3
Figure 3.	I200 Keyboard Layouts	5
Figure 4.	I200 TV Monitor Controls	7
Figure 5.	Rear Panel Controls	9
Figure 6.	I200 Current Loop Connection	11
Figure 7.	EIA RS-232 Signals and Connector Pins	12
Figure 8.	I200 Display Block Diagram	14
Figure 9.	Control Logic PCB	15
Figure 10.	Power Supply Test Points	15
Figure 11.	Serial Interface Block Diagram	16
Figure 12.	Memory Configurations	17
Figure 13.	Keyboard Assembly	19
Figure 14.	Cover Removal	22
Figure 15.	PCB Mounting	22
Figure 16.	AC Input Selection	23
Figure 17.	I200 Series Name Plate	24
Figure 18.	Fault Location	27
Figure 19.	Assembly to Schematic Reference Table	29

Figure 1 INFOTON I200

1. SPECIFICATIONS

The INFOTON I200 is a stand-alone alphanumeric display terminal for use in data entry and retrieval systems where a highly flexible interaction between man and machine is desired. The I200 incorporates such important standard features as cursor addressing, conversational mode, and an Infotone which operates on the bell code. Complete specifications are listed in INFOTON Document No. 03231.

1.1 BASIC SYSTEM

Power	Domestic: 120 watts, 105–130 volts; 60 Hz Export: 120 watts; 105–130, 210–260 volts; 50 Hz
Temperature	Operating: 5° to 40°C Storage: –30° to 70°C
Humidity	5% to 80% non-condensing
Dimensions, Terminal	13 inches high, 17 inches wide, 16 inches deep (33 cm x 43 cm x 41 cm)
Weight, Terminal	35 pounds (15.8 Kg)
Dimensions, Keyboard (200/1)	3 inches high, 17 inches wide, 8 inches deep (7 cm x 43 cm x 20 cm)
Weight, Keyboard	7 pounds (3 Kg)
Screen Size	12 inch diagonal (30 cm)
Display Size	8-1/2 inches wide, 6 inches high (21 cm x 15 cm)
Characters/Line	80
Lines	24, 12 Lines Optional
Line Spacing	0.45 character height (11 mm)
Character Format	9 x 9 dot matrix
Character Spacing	0.4 character width
Character Size	0.08 x 0.19 inch nominal (2 mm x 5 mm)
Character Repertoire	64 ASCII Standard, 95 ASCII Optional
Refresh Rate	Domestic: 60 times a second ± 0.5 Hz Export: 50/60 times a second ± 0.5 Hz
Cursor	Non-destructive blinking underscore
Transmit Data	Character by character as entered by the keyboard.

1.2 STANDARD INTERFACE

The Asynchronous Serial Interface is a multi-purpose serial data interface which provides maximum flexibility in operator switch selectable data rates, and operation modes that can be applied to allow operation under a wide variety of serial data input and output situations. A panel at the rear of the display contains switches and connectors that allow the operator to match both the standard EIA RS232C voltage interface and the teletypewriter compatible 20/60 mA current loop interface for serial communications and computer interfaces.

The operator selectable functions include the following:

1. Sixteen data rates – 50, 75, 110, 134.5, 150, 200, 300, 600, 1200, 1800, 2400, 3600, 4800, 7200, 9600, 19,200 bits per second.
2. An external TTL clock input
3. Local Copy
4. Ten or eleven bit code selection (one or two stop bits)
5. Odd, Even, Mark or Space Parity
6. Normal or strapped Request-to-Send
7. Normal or Reversed Video
8. Page or Bottom Line Entry Mode
9. 20 or 60 mA teletypewriter compatible current loop interface
10. EIA RS232C interface

I200 CODE SET

BITS 4, 3, 2, 1	BITS 7, 6, 5 000	001	010	011	100	101	110	111
0000	F1	F7	SPACE	0	@	P	`	p
0001	F2	PRINT COPY ON	!	1	A	Q	a	q
0010	F3		"	2	B	R	b	r
0011	F4	PRINT COPY OFF	#	3	C	S	c	s
0100	F5		$	4	D	T	d	t
0101	ANSWER BACK	F8	%	5	E	U	e	u
0110	F6	F9	&	6	F	V	f	v
0111	BELL	CURSOR ADD.	/	7	G	W	g	w
1000	BSP	F10	(	8	H	X	h	x
1001		FSP	)	9	I	Y	i	y
1010	LF	HOME	*	:	J	Z	j	z
1011	ERASE LINE	ESC	+	;	K	[	k	{
1100	ERASE PAGE	UP	,	<	L	\	l	|
1101	CR	DOWN	–	=	M	]	m	}
1110	KBD LOCK	F11	•	>	N	↑	n	~
1111	KBD UNLOCK	F12	/	?	O	←	o	RUB OUT

THE AREA ENCLOSED BY DASHED LINES REPRESENT LOWER CASE CODES WHICH ARE DISPLAYED AS UPPER CASE CHARACTERS WHEN THE LOWER CASE OPTION IS NOT INSTALLED.

Figure 2 ASCII Character Set

1.3 OPTIONS

- Scroll or non scroll operation
- TTY keyboard, or TTY keyboard with numeric pad, or upper/lower case keyboard with numeric pad, or upper/lower case keyboard with numeric pad, function keys, and cursor keys.

- 12 or 24 line display
- Bell on 70th character
- Normal or offset cursor address codes
- Normal or reversed video
- National character sets

2. OPERATING INSTRUCTIONS

Before using your I200 on line we suggest that this section be read and understood.

2.1 OPERATOR CONTROLS, FRONT

Operator controls and indicators which are located on the front of the terminal and on the keyboard assemblies are shown in Figure 3 and described below.

- POWER – In the ON position, the terminal is in the operating state and an indicator contained within the switch is illuminated. In the OFF position, power is removed from the terminal. After the switch is turned ON, a 30 second warm-up period is required before operating the terminal.
- LINE/LOCAL – Selects either local or on line mode of operation. In LOCAL, data and control are provided by the keyboard. The unit is automatically configured in the LOCAL COPY mode and no data is transmitted to the interface. In ON LINE, data flow to and from the terminal is permitted. On models 200/1 and 200/2 the status is determined by the position of the switch. On models 200/3 and 200/4 the status is indicated by illumination of an integral LED in the ON LINE position.

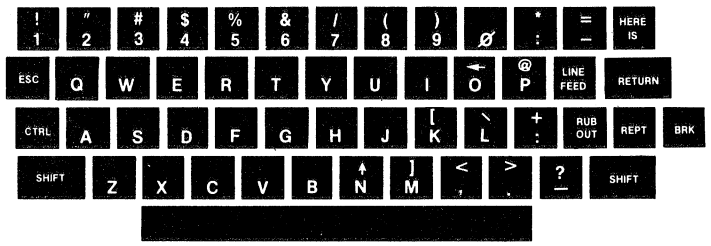

Model 200/1 STANDARD KEYBOARD

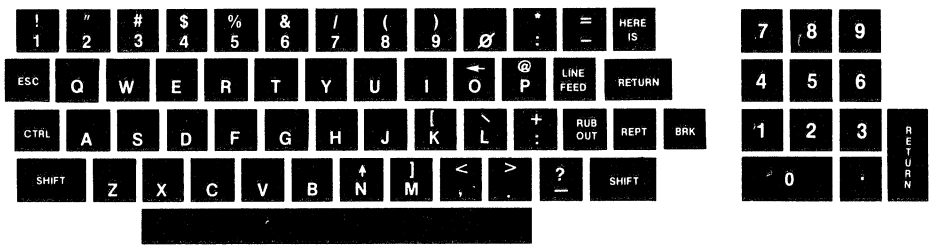

Model 200/2 OPTIONAL NUMERIC PAD KEYBOARD

Figure 3 I200 Keyboard Layouts

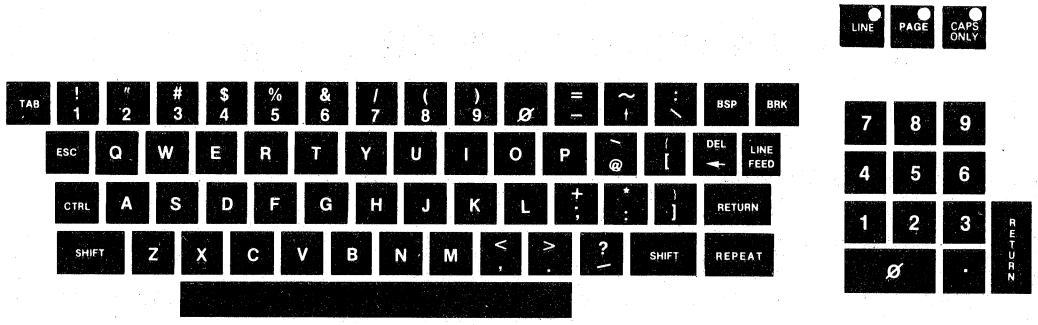

Model 200/3 UC/LC NUMERIC PAD KEYBOARD

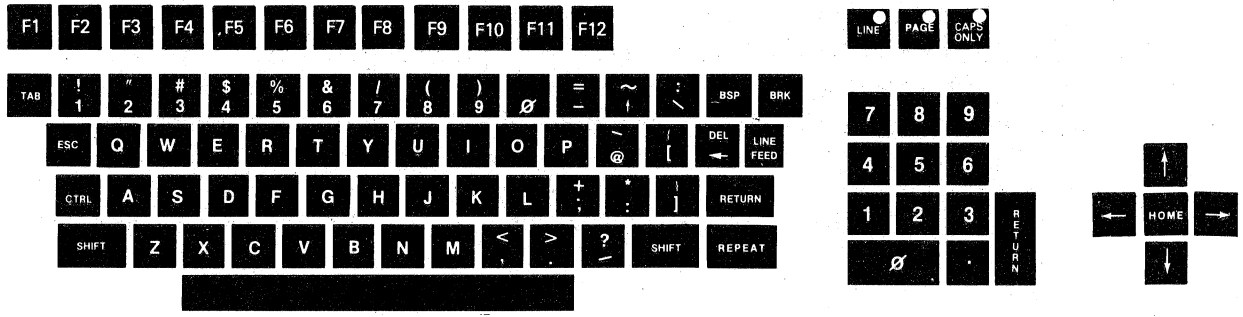

Model 200/4 UC/LC NUMERIC PAD FUNCTION KEY KEYBOARD

Figure 3 I200 Keyboard Layouts (Continued)

2.2 KEYBOARD AND CODE SET

The I200 terminal is controlled by a 7-bit ASCII code set, Figure 2, generated by the four keyboards shown in Figure 3, or received over the data line.

The 64 ASCII codes from 040_8 through 137_8 are entered into memory when received from the data line or from the keyboard (Local Copy). With the exception of the space code (040_8); all of these codes result in the display of a character on the I200 screen.

The 31 ASCII codes from 140_8 through 176_8 (lower case), are stored in memory when received and are displayed as upper case characters when the lower case option is not installed.

LINE FEED

LINE FEED - (from data line or from keyboard) — The LINE FEED command causes the top line of the display to be erased, lines 2 through 24 will be moved up one position, and the bottom line will be blank.

RETURN

RETURN - (from data line or from keyboard) — The carriage RETURN key places the cursor at the beginning of the bottom line (left margin).

RUB OUT

RUBOUT - (from keyboard) — The RUBOUT key causes a rubout code (all ones) to be transmitted, no cursor movements occur and no character enters memory. Rubout codes received from the data line are ignored.

REPT	REPEAT - (from keyboard) — The REPEAT key, when held down while any other key is depressed, causes that character or function to be repeated at a rate of 10 characters per second.
BRK	BREAK - (from keyboard) — Depressing the BREAK key forces a "space" condition on the data line as long as the key is depressed.
SHIFT	SHIFT - (from keyboard) — The SHIFT key enables keyboard generation of symbolic characters (!, &, etc.).
CTRL	CONTROL - (from keyboard) — Depression of the CONTROL key allows the control code to be transmitted over the line.
ESC	ESCape - (from keyboard) — The ESCape key generates the ASCII code 023_8. If received over the data line, it is ignored.
F1	Function keys transmit the code shown in Figure 2. These codes have no effect when received by the terminal.
PAGE°	PAGE selects page mode when scrolling option is installed and is indicated by an illuminated LED. When non scrolling option is installed this key has no effect.
CAPS° ONLY	CAPS ONLY prevents the keyboard from generating lower case alphabetic characters only. All other functions are normal including the use of the shift key. CAPS ONLY mode is indicated by the illumination of an LED.

2.3 I200 TV MONITOR CONTROLS

The two operator controls which affect the TV monitor presentation are located on the underside of the front left corner of the terminal assembly as shown in Figure 4.

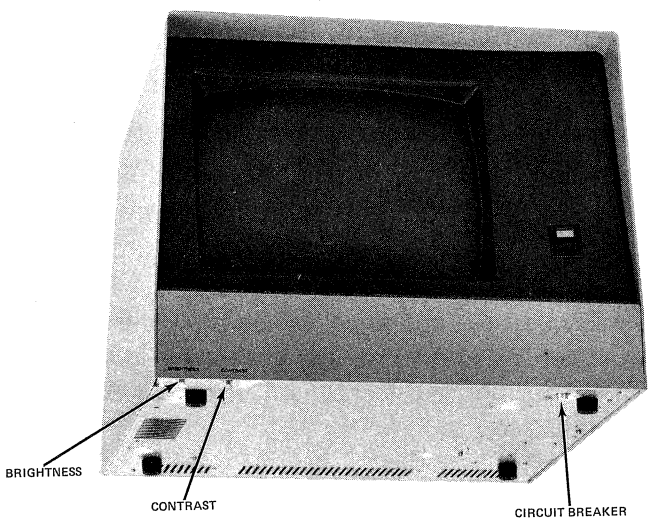

Figure 4 I200 TV Monitor Controls

2.3.1 Intensity

Allows adjustment of the brightness of the characters displayed.

2.3.2 Contrast

Allows adjustment of the contrast to provide image density control.

2.4 REAR PANEL CONTROLS

Interface controls, located on the rear of the I200 terminal, provide for customer interface connection and determination of related functions (data rate, parity, etc.), for the serial asynchronous EIA or current loop interface.

2.4.1 Data Rate Selector

This switch selects one of sixteen rates or External clock as shown in Figure 5. The EXT setting provides for handling data rates other than the sixteen rates listed. The external clock must be a TTL compatible pulse source cycling at 16 times the rate desired (maximum data rate is 20 kilobaud).

2.4.2 Parity

The parity switches determine both the transmit and the receive parity. In the EVEN position, the transmit character parity bit is selected to make the number of marking bits in the character even. The switch also configures the receive parity checking logic to check for EVEN parity. In ODD parity the transmitter transmits ODD parity and the receiver checks for ODD character parity. In MARK parity the transmitter always sends a marking bit for parity and the receiver does not check for parity. In Space parity the transmitter always sends a spacing bit for parity and again the receiver does not check for parity.

2.4.3 Local Copy

The local copy switch, when on, routes transmitted data back to the receiver in addition to sending it to the CPU. In the off position the transmitted data will appear on the screen ONLY when the CPU echos it back.

2.4.4 Stop Bits

The 1/2 stop bit switch determines the number of bits transmitted by the terminal to be either 10 or 11 (1 stop bit, or 2 stop bits). If the correct configuration is not known select 2 stop bits.

2.4.5 Request-to-Send

The R-T-S switch allows the Request-to-Send signal generated within the terminal and used on the EIA interface to be permanently on (RTS ON) or to cycle as each character is transmitted (RTS Normal). RTS On position is used primarily on a full duplex network and when using the current loop interface.

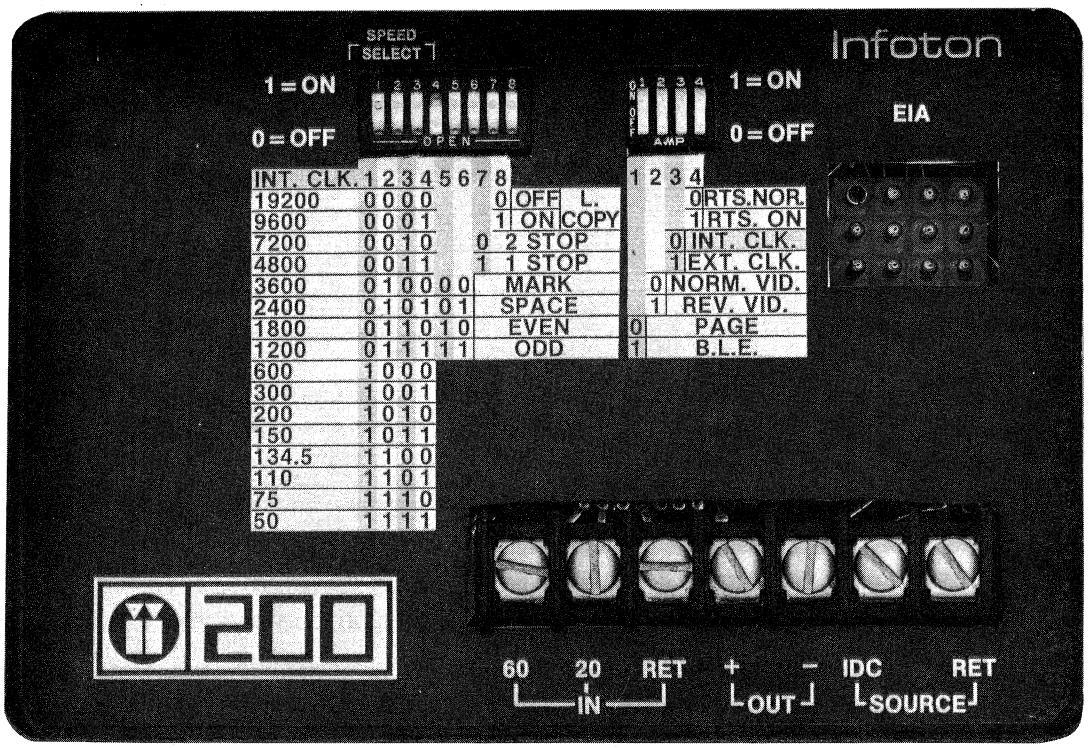

Figure 5 Rear Panel Controls

2.4.6 Normal/Reversed Video

This switch determines the presentation of all data on the screen. In NORM position all characters appear as white dots on a black background. In REV position all characters appear as black dots on a white background.

2.4.7 Page/Bottom Line Entry

This switch determines the mode of the terminal scrolling option. When in the PAGE position Home is the top left of the screen and data entry proceeds from there to the bottom of the screen. In the BLE position data is entered on the bottom line only and the screen rolls up one line when the bottom line is filled. In BLE position cursor addressing is inhibited as the cursor can reside only on the bottom line. On models 200/3 and 200/4 this switch is inactive as the switching function is available on a keyboard key. When the non scrolling option is installed both this switch and the keyboard key are inactive.

2.4.8 EIA

The molex connector (Figure 7) provides I/O termination for use with INFOTON supplied modem cable. The cable is designed to be attached to a modem; however, it may be used directly with a computer modem interface. The I200 EIA interface specifications comply with EIA RS232 and CCITT V24 standards.

2.4.9 Current Loop Terminal Strip

A 7 pin barrier strip is provided to interconnect with the current loop interface. Either Full or Half Duplex operation may be used at either 20 or 60 mA. The source of the current is external to the I200. Figure 6 illustrates both Full and Half Duplex connections.

2.5 INITIAL SETUP

At the start of any operating period, we recommend that you follow these procedures before turning the terminal on line.

- Set the LINE/LOCAL switch to LOCAL, POWER switch to ON. The Power switch will then illuminate and approximately 30 seconds later a blinking cursor will appear on the screen.
- Check front and rear panel switches for proper position (data rate, parity, etc.).
- Type a message and see that it is correctly written on the screen. Exercise all functional keys to insure correct operation.
- Adjust INTENSITY and CONTRAST controls for your viewing comfort.

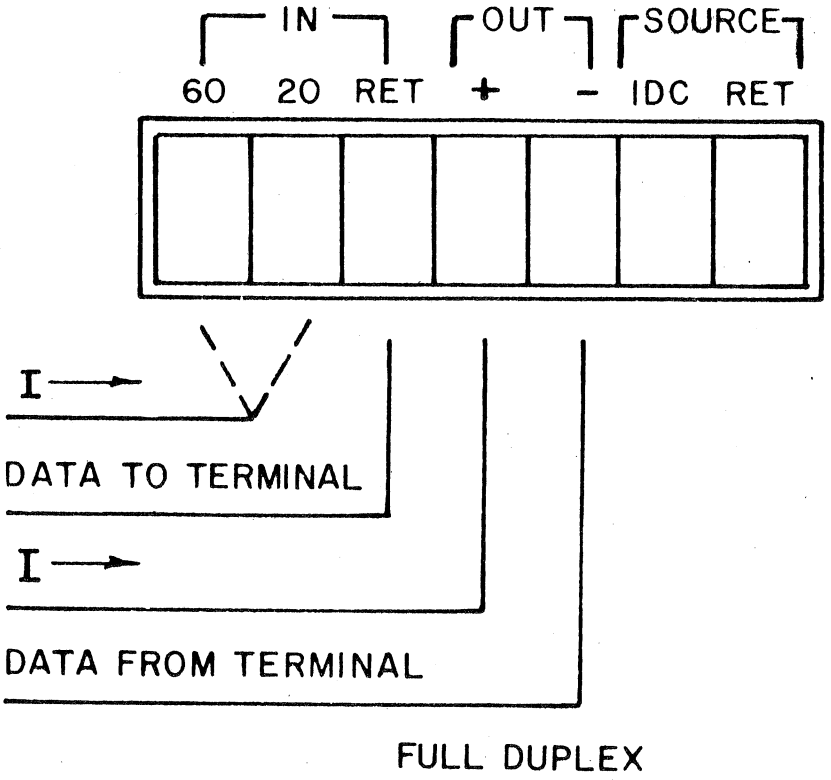

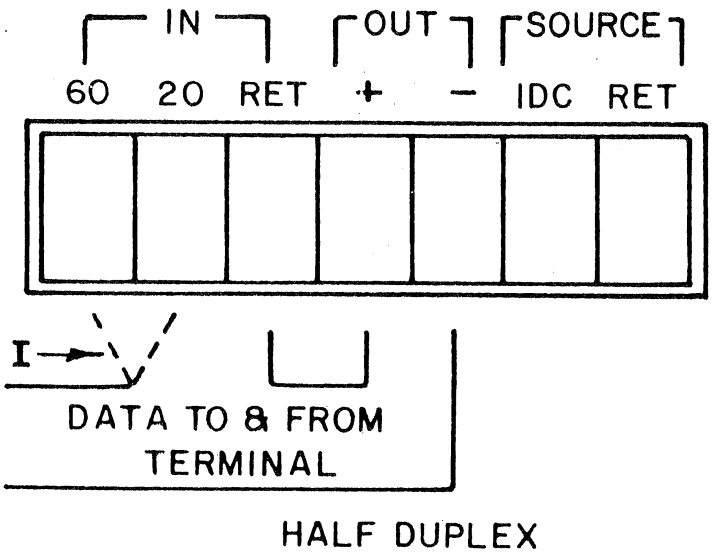

Figure 6 I200 Current Loop Connection

EIA RS-232C Name	CCITT V-24 Name	Description	Printer EIA Pin No.*	Modem EIA Pin No.	MOLEX Pin No.	Comments
BA	103	Data transmitted from terminal	–	2	1	Logical "1" = OFF = –12V Logical "0" = ON = +12V 300-ohm source impedance.
CA	105	Request to send signal from terminal	–	4	2	Goes high (+12V) when the terminal is ready to transmit.
CB	106	Clear to send signal to terminal	–	5	3	Must be high to allow terminal to send; is supplied by a modem.
BB	104	Data transmitted to terminal	–	3	4	Logical "1" = OFF = –5V to –25V Logical "0" = ON = +5V to +25V 6.8K ohm load impedance
CF	109	Carrier present signal to terminal	–	8	5	Must be high to allow terminal to receive; is supplied by a modem.
CD	108.2	Data terminal ready signal from terminal	–	20	8	Goes high (+12V) when terminal is on LINE; is low when terminal is in LOCAL mode.
		External clock input at TTL logic level	–	–	10	For use with RECEIVE RATE selector switch in EXT position.
AB	102	Signal ground	7	7	12	
CC	107	Data set ready	–	6	7	Must be high to allow terminal to operate; is supplied by a modem.
BB*	104	Data to printer	3	–	11	Optional print data
CB*	106	Clear to send	5	–	–	These signals are connected to the printer's data terminal ready signal.
CC*	107	Data set ready	6	–	–	
CF*	109	Carrier present	8	–	–	
CD*	108.2	Data terminal ready	20	–	–	

*Optional cable assembly, see Section 3.5

Figure 7 EIA RS-232 Signals and Connector Pins

3. THEORY OF OPERATION

As an aid in maintenance of your I200 this section is provided to give the reader a basic feel for how their terminal functions. It is only intended as an aid in location of a problem to the sub-assembly level. Repair of subassemblies is not covered in this manual. This section is broken up into three parts; Keyboard Electronics, Logic Board Assembly, and TV Monitor.

The physical configuration consists of three major groups:

- TV Monitor
- Keyboard Switch Assembly
- Logic Board Assembly (Figures 9 and 10)
  1. Timing and Control Logic
  2. Memory
  3. Video Logic
  4. EIA Drivers and Receivers
  5. Current Loop Drivers and Receivers

3.1 KEYBOARD ASSEMBLY

The keyboard assembly uses a fully encoded Capacitive Scan technique. Seven bit ASCII codes are created with each key stroke without the use of switch contacts of any kind. Rollover features are incorporated which allow proper generation of codes as keys are struck even though one or more other keys are held depressed. Documentation on the keyboard will be found in the appendix.

3.2 CONTROL LOGIC PRINTED CIRCUIT ASSEMBLY (Figures 9 and 10)

The Control Logic PCB contains most of the components comprising the terminal.

3.2.1 Power Supply Portion

The I200 power supplies are contained on the Control Logic PCB and consist of four +5V supplies, a +12V supply, a −12V supply, and a +15V supply. Each supply except for the +15V supply has been implemented using 3 pin monolithic regulators. The +15V supply uses a conventional pass transistor in addition to the 3 pin monolithic regulator in order to provide sufficient power for the separate sync. TV monitor. Figure 10 indicates the test points for each supply output.

3.2.2 Interface Electronics Portion

The interface electronics provides a 20/60 mA Teletype compatible current loop interface, and an EIA RS232C compatible interface. Both operate in an asynchronous serial mode. EIA RS232C connector pin assignments and signal levels are defined in Figure 7. Both full and half duplex modes of operation are available. In addition, Mark, Space, Even, or Odd parity, the eighth bit, can be selected by the operator. Data rates are operator selectable. Eleven or ten bit code length at all data rates is also switch selectable.

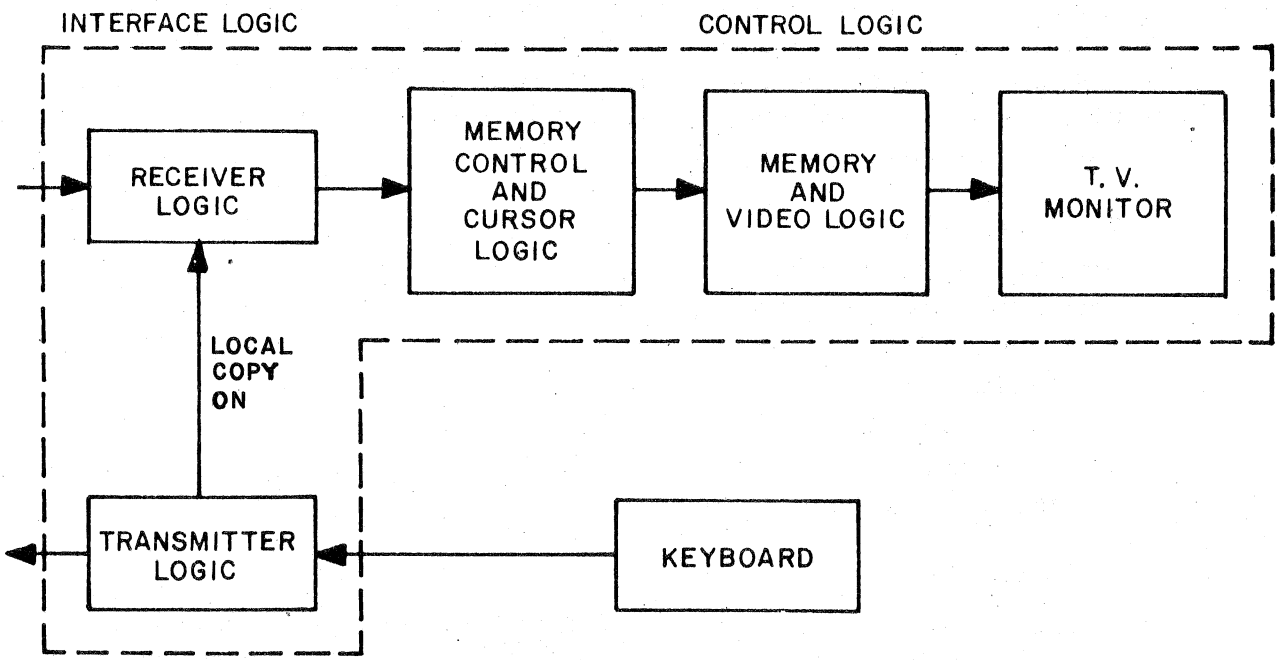

Figure 8 I200 Display Block Diagram

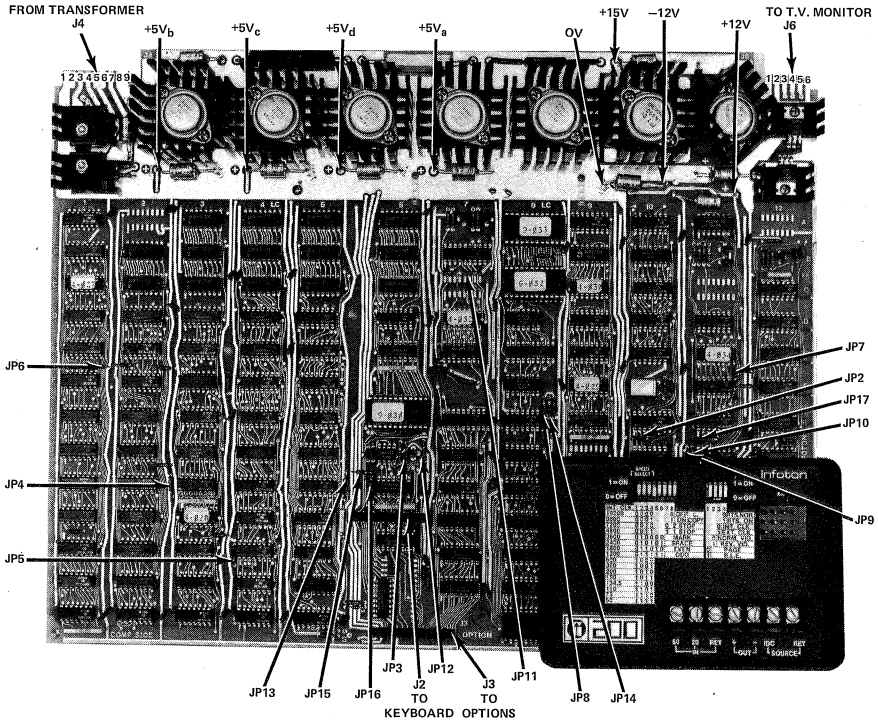

Figure 9 Control Logic PCB

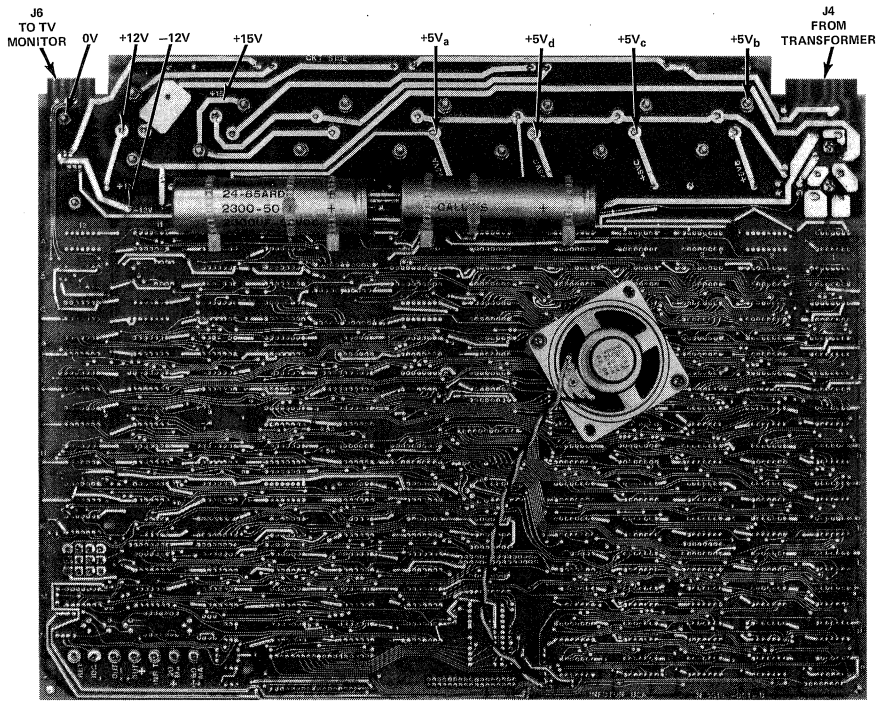

Figure 10 Power Supply Test Points

The asynchronous serial interface consists of a transmitter (parallel to serial converter) and a receiver (serial to parallel converter), (see Figure 11). Parallel data generated by the keyboard is converted by the transmitter to a serial bit stream. The bit stream is appended with a start bit, parity bit, and either one or two stop bits (10 or 11 unit code) prior to presentation at the transmit output.

Serial data at the receive input is stripped of start and stop bits, after which the parity bit is checked against the character parity and the status of the parity selection switch. The receiver converts the seven bit serial code to parallel, and forwards the character to memory.

Schematic diagrams of the I/O electronics and keyboard electronics are contained in the Appendix.

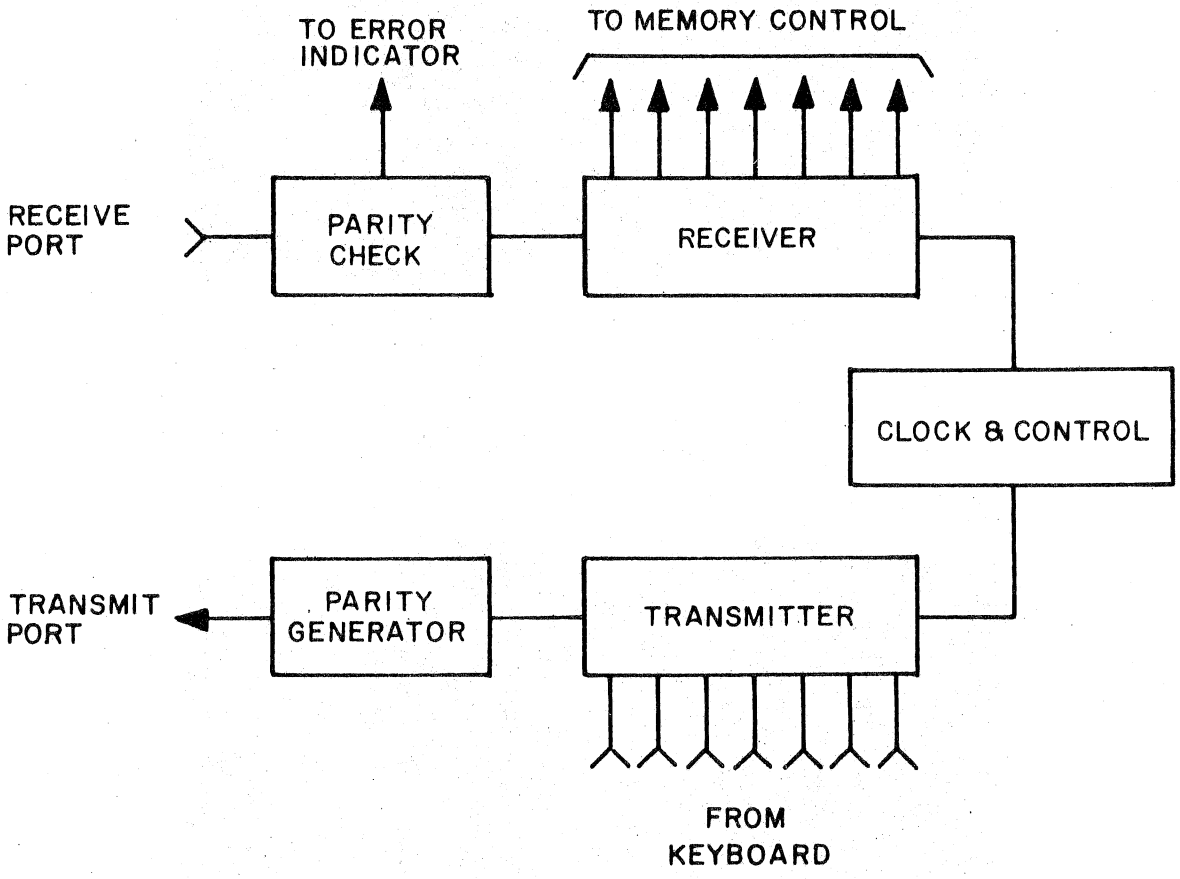

Figure 11 Serial Interface Block Diagram

3.2.3 Timing and Control Electronics

The timing and control logic provides complete timing for the display. The basic clock (24.024 MHz crystal oscillator) is used to provide the character dots to the video monitor. A divide by fourteen counter converts the basic clock to character clock. This clock is divided by 110 to form the character time (110 characters per line). The character time is then divided by 10 for 10 slices per character line. Last in the chain is a divide by 24 for

24 lines per screen. The character and line portions are used as memory address while refreshing the screen. In addition, other timing signals are derived from the basic clock to drive the read only memory (ROM) timing, vertical and horizontal sync for the monitor, and form the data rates used in the serial interface.

3.2.4 Memory

The data memory consists of two banks of 1024X7 bit RAM. During data storage the even display lines (L0, L2, etc.) are stored in the first bank while the odd display lines are stored in the second bank. Figure 12 illustrates these area assignments.

During erase and initialize operations the memory is configured in eight contiguous sections of 256 addresses each. For I/O operations each of these eight sections contain three lines of 80 characters each.

Absence of data in memory is represented by space codes and memory is filled with space codes during initialize and erase operations.

VMA 10 = 0
VMA 7, 6, 5, 4

VMA 9 8	0101	1010	0000	
0 1	L0	L2	L4	
1 0	L6	L8	L10	
1 1	L12	L14	L16	
0 0	L18	L20	L22	

0 80 160 240 256

VMA 10 = 1
VMA 7, 6, 5, 4

VMA 9 8	0101	1010	0000	
0 1	L1	L3	L5	
1 0	L7	L9	L11	
1 1	L13	L15	L17	
0 0	L19	L21	L23	

0 80 160 240 256

NORMAL OPERATION

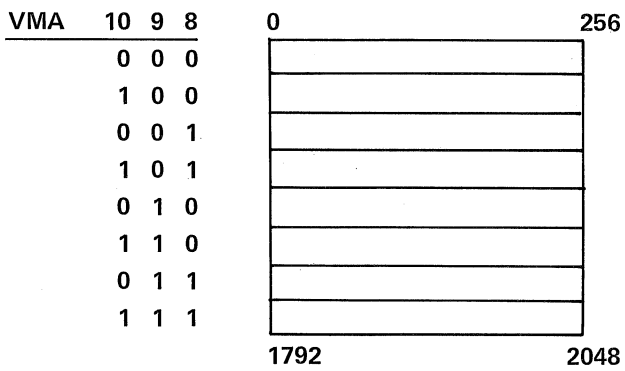

ERASE PAGE AND INITIALIZE

Figure 12 Memory Configurations

3.2.5 Memory Control

Memory addressing is divided into two categories, I/O operations and Screen Refresh. The I/O operation is further divided into two categories, Erase and write data.

When erasing the screen and power on initialize, the memory is configured in 8 contiguous sections of 256 addresses. The character counter is allowed to count to a value of 255 before resetting and incrementing the roll counter. The roll counter therefore addresses each of the eight sections while the character counter addresses the locations within each section.

When writing a character into memory the character counter is allowed to count to a maximum of 79 and indicates the character position within the line. The line counter is added to the roll counter, the sum of which is offset to allow three 80 character lines within each section. This sum is then added to the character counter to form the absolute memory address.

When in Bottom Line Entry mode the effective line counter value is set to 23 by a multiplexer. The offset sum of the roll counter and line 23 in addition to the character counter form the absolute memory address.

When the non scroll version is selected the line counter logic is present, however the non scroll prom will not increment the roll counter, but will instead increment the line counter. The roll counter is held at a count of 8 (value after initialize or erase) and this is added to the line counter. Again this sum is offset and then added to the character counter to form the absolute memory address.

When not inputting a character into memory, the line and character counters are inhibited from becoming the memory address. The Line portion of the main timing chain is substituted for the line counter, and the character portion of the main timing chain is substituted for the character counter. A similar addition is made with the roll counter and again offset to form the address from which data will be extracted for display on the screen.

Note that the least significant bit of the effective line address is used as the most significant bit of the memory address, or bank select. This allows the second bank of memory RAMs to be removed when a 12 line display is desired.

The highest 16 addresses in each of the eight sections of memory, see Figure 12, are never used for data storage, however they are erased during initialize and erase operations.

3.2.6 Video Logic

Memory data is presented to two proms during refresh operation. Bits 5 and 6 from memory are decoded to determine whether the character is an upper or lower case code. The correct prom is then enabled and power is applied to extract the dot pattern. The prom output consists of up to 5 dots plus a control output. The dots are presented to the video shift register for serialization while the control output is used to determine the shift mode of the video shift register. If the control bit is a zero the dots associated with it are shifted out to the monitor 1/2 bit time earlier causing the presentation of those dots to be shifted to the left from their normal position. The presentation of curves within characters is thereby enhanced and produces effectively a 9 x 9 Matrix area rather than a 5 x 9.

3.3 AUXILIARY DEVICES

An Infotone is provided which sounds an audible tone when a bell code is received. Optionally the Infotone will also sound when the character counter passes the 70th position on a line. See section 4.4 for jumper location.

3.4 VIDEO MONITOR

The separate sync video signals generated on the control PCB are channeled to the video monitor. Detailed information on the video monitor is contained within the TV Monitor manual.

3.5 PRINTER COPY MODE OUTPUT

Through the use of the Optional EIA Cable Assy. PN 03157-G01 an EIA output is provided for printer operation. In line mode, Local Copy OFF, receive data is sent to the printer at EIA levels and at the data rate of the receiver. Keyboard data arrives at the printer by virtue of the CPU echoing the data.

In line mode, Local Copy ON, both receive and keyboard data are sent to the printer at EIA levels and at the receive-transmit data rate.

In local mode, keyboard data is sent to the printer at EIA levels and at the receive-transmit data rate allowing the operator to annotate the hard copy.

By use of internal jumpers, the copy function can be enabled and disabled from the data line by use of the DC1 (Print Copy ON) and DC3 (Print Copy OFF) codes.

Figure 13 Keyboard Assembly

4. SERVICE

The INFOTON I200 terminal is a modular system that has been designed for ease in service. In addition to a high MTBF, the I200 terminal has a maximum time to repair of 30 minutes. Typically fault location and replacement takes 10 minutes. This section is intended to aid the service man in module replacement. Section 5 of this manual is devoted to troubleshooting and fault location.

4.1 MECHANICAL ACCESS TO THE UNIT

4.1.1 Removal of Cover (Figure 14)

a. Remove two flat head screws from each side of cover
b. Lift cover straight up and off.

4.1.2 Removal of the Control Logic PCB (Figure 15)

a. Disconnect the two connectors from the top of the PCB
b. Remove keyboard cable connector
c. Remove the PCB

4.2 VIDEO MONITOR ADJUSTMENTS

With a screen full of H's, vertical size, vertical linearity, horizontal size, horizontal linearity, brightness, contrast, and focus adjustments can readily be made. Consult the appropriate supplement contained in Section 7 for the location of these controls. Best linearity can be achieved when the block of 1920 characters form a rectangle of from 7.5 to 8.5 inches wide (19-21 cm) and 5.5 to 6.0 inches high (14-15 cm).

4.3 POWER SUPPLY ADJUSTMENTS

The I200 is equipped with a general purpose power supply incorporating overvoltage protection and current foldback protection. Power Supply input is selectable as follows.

By Frequency

JP11 is installed for 60 Hz, removed for 50 Hz.

By Voltage

Figure 16 details the jumper connections for AC Input range selection. This terminal strip is located adjacent to the transformer.

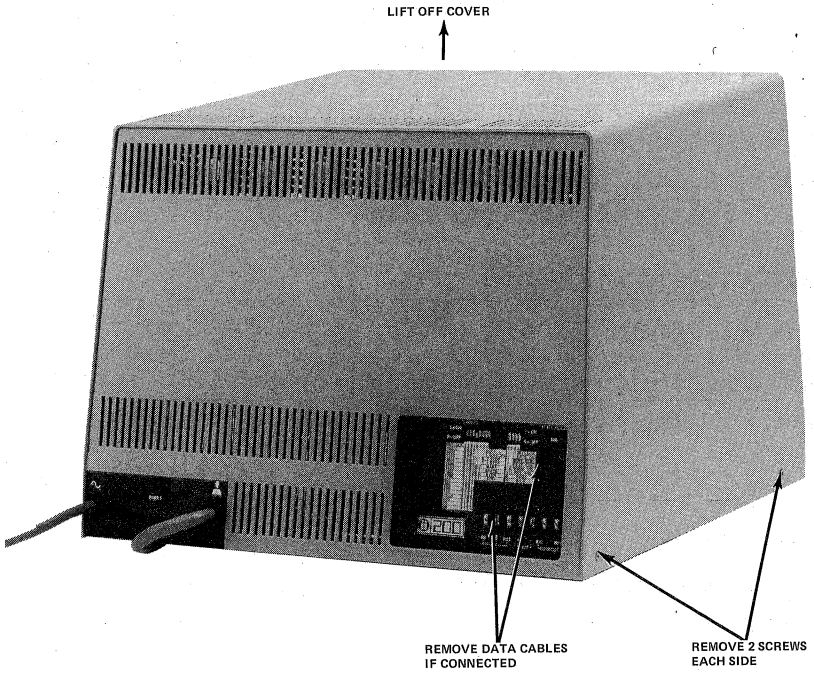

Figure 14 Cover Removal

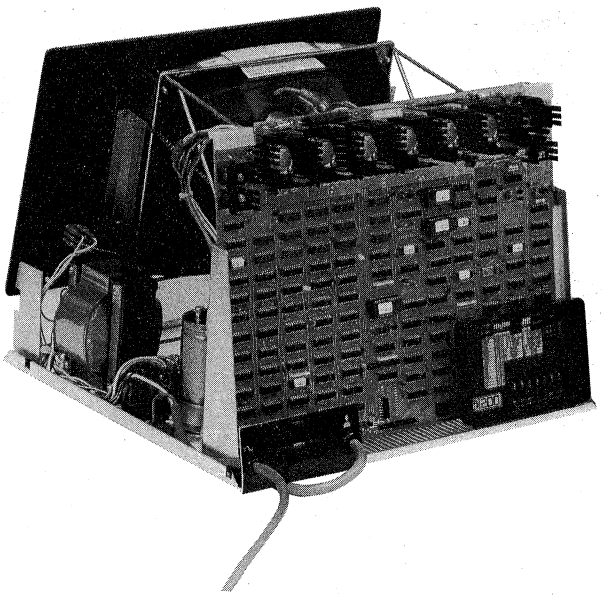

Figure 15 PCB Mounting

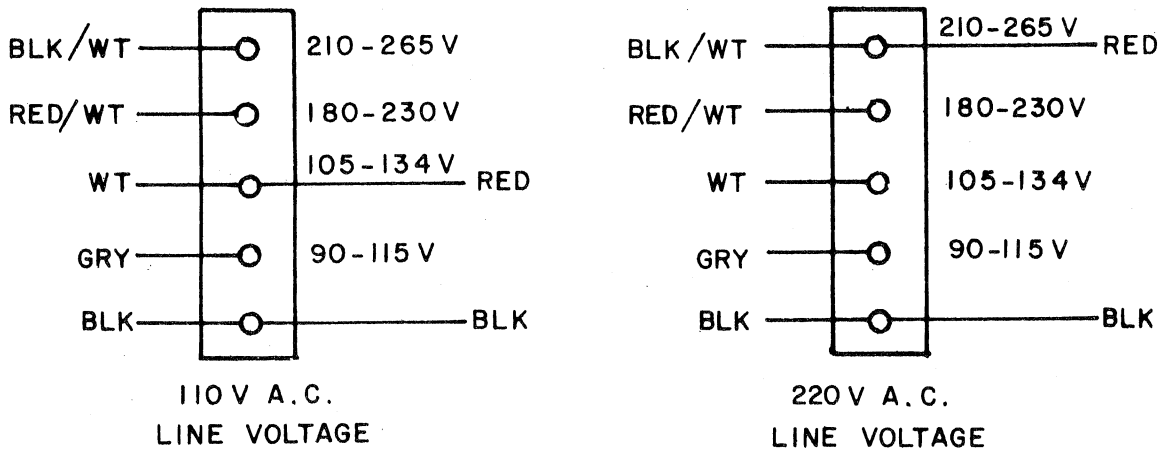

Figure 16 AC Input Selection

The proper tap is the highest voltage range which contains the value of the nominal line voltage.

The TV monitor receives its power from the +15 volt power supply. As a result there are no changes within the monitor due to line voltage or frequency changes.

4.4 OPTIONAL JUMPERS

The following chart details the use of all jumpers contained on the I200 Control Board Assembly. Jumpers are 10 ohm resistors in the locations shown in Figure 9.

Jumper	Functionality When Installed	Functionality When Removed
JP1	Nonexistent	Nonexistent
JP2	Permanent Roll Mode	Allow Keyboard or Rear Panel Roll Switch
JP3	Using U/L Case Keyboard	Using TTY Keyboard
JP4	Cursor Address $040_8 - 177_8$	Cursor Address $000_8 - 177_8$
JP5	Bell on 70th Character	No Bell on 70th Character
JP6	12 Line Display	24 Line Display
JP7	Upper Case Only	Upper/Lower Case
JP8	KBD "Caps Only" Key Present	KBD "Caps Only" Key Not Present
JP9	KBD "Rev. Video" Key Present	KBD "Rev. Video" Key Not Present
JP10	Using Rear Panel "Rev. Video" Switch	Using KBD "Rev. Video" Key
JP11	60 Hz	50 Hz
JP12	Using KBD "Roll" Key	Using Rear Panel "Roll" Switch
JP13	Not Used	Normal
JP14	Permanent "Caps Only" Mode	Normal

Jumper	Functionality When Installed	Functionality When Removed
JP15	Print Copy on Command Allowed	Print Copy On Comm and Ignored
JP16	Permanent Print Copy On	Allow Print Copy On Command
JP17	Rear Panel "Roll" Switch Connected	Rear Panel "Roll" Switch Not Connected

4.5 ORDERING REPLACEMENT AND SPARE PARTS

After determining the failure mode of the unit (see Section 5), a replacement part may be ordered by performing the following steps:

- Identify the terminal by name and serial number (see Figure 17). The serial number name tag is located on the bottom of your I200 terminal.

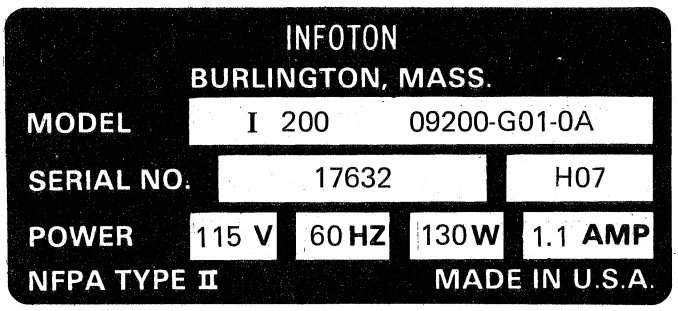

Figure 17 I200 Series Name Plate

- Identify the module by name and assembly part number (APN).
- Refer to the spare parts manual in Section 7 to find the proper part number when ordering parts.

If a question arises as to what is the correct part to order, write or call the Manager of Customer Engineering, INFOTON, INC., Second Avenue, Burlington, Massachusetts 01803; Phone: (617) 272-6660. Be sure to supply the terminal serial number as shown in Figure 16.

INFOTON maintains a complete product log of each unit in the field. The log is intended to aid the customer in acquiring proper service for his terminal. All factory authorized changes that are applied to a terminal in the field are entered in the product log. If a customer would like INFOTON to keep a record of authorized factory changes that he may apply to his terminal, he may do so by notifying the Manager of Customer Engineering, INFOTON, INC., in writing. Be sure to supply detailed information of the changes applied and the display serial number.

5. TROUBLESHOOTING AND FAULT LOCATION

5.1 I200 TERMINAL SELF CHECK

A feature of the I200 terminal is that it is capable of almost a complete self check when placed in the local mode of operation, all subassemblies of the I200 terminal are exercised. Only the serial interface is not fully exercised. The serial interface can be tested by operating the I200 on line with a turn-around plug, (APN 99999-022) Section 7, plugged into the EIA cable.

5.2 SUBASSEMBLY FUNCTIONS

Troubleshooting at the customer's site shall be limited to isolating the fault to one of the system's subassemblies. These subassemblies and their functional role in the system are described in the following paragraphs.

5.2.1 Keyboard Assembly (Figure 13)

- Capacitive switches and encoding logic producing parallel TTL codes
- Line/Local switch

5.2.2 Control PCB (Figure 9)

- Asynchronous Serial Interface
  1. Receives serial input data and converts it to parallel for presentation to memory.
  2. Receives parallel data from keyboard electronics and converts it to serial for data presentation to current loop and EIA output.
  3. Generates I/O direction and request signals.
  4. Contains interface clock source.
  5. Converts received EIA and current loop information to TTL logic levels.
  6. Converts transmit TTL information to EIA and current loop levels.
  7. Provides data rate, bits per character, FDX/HDX, and parity selection information.
- Timing Generator
  1. Clock Source
  2. Raster Generator
  3. Sync Generator
  4. Timing Signal Generator
  5. Memory Timing
- Control Logic
  1. Data Input Buffer
  2. Input/Output Control Logic
  3. Cursor Counter

4. Line Counter
5. Roll Counter
6. Cursor Comparator
7. Infotone
8. Control Code Decoding

- Video Generation
  1. Read Only Memory
  2. Parallel to Serial Converter
  3. Video Drivers
- Memory
  1. MOS RAM
- Power Supply
  1. Power Supply Active Components

5.2.3 Video Monitor

Combines horizontal sync., vertical sync. and serial video information for presentation on the CRT screen.

5.3 TROUBLESHOOTING

Because of the modular construction of the I200 terminal and its built-in self-test capability, troubleshooting is a relatively simple procedure. Most troubleshooting can be accomplished by viewing the CRT while exercising I200 terminal in local mode. The following additional equipment may be useful when troubleshooting a I200 terminal, especially when the trouble is associated with the particular system configuration in the on-line mode.

- General Purpose Multimeter
- Cross Coupler APN 99999-014
- Turn-around Connector APN 99999-022
- A second terminal (VISTA, VISTAR or VISTAR/GT)
- Oscilloscope Tektronix 453 or equivalent
- ASR 33 Teletype
- Spare set of Replacement Modules

5.3.1 System Test, Off Line (terminal in local mode)

Exercise the terminal from the keyboard, being sure to test all of its functions. Make sure data is loaded onto every line of the display, and that the top and bottom line is filled completely. The turn-around connector may be used by placing the terminal on-line, thereby exercising the entire transmitter and receiver.

5.3.2 System Test, On Line

Repeat steps outlined in 5.3.1 including all control codes recognized by the computer.

5.3.3 Power Supply Testing

Because of over-voltage and over-current protection of the I200 power supply, the symptom of power supply, failure may be caused by problems listed below:

- Over-voltage crowbar. Turn unit off, then on again. The power supply should recover from this failure mode.
- Over-current protection causes the power supply to reduce output voltage when the current capacity of the supply is exceeded. This can be caused by a short within any module. To isolate this type of failure, simply unplug each module until the supply recovers. If all modules are removed and the failure still exists, check the PCB for contaminants bridging etched circuits. Replace the control PCB assembly if failure persists.

5.4 FAULT LOCATION

Since there is inherently some interaction between the modules within the terminal, it becomes difficult to pinpoint the defective module for all possible symptoms. In the following table typical failure symptoms, probable sources of trouble, and recommended repairs are listed.

Fault	Probable Source of Trouble	Recommended Repair
Pilot lamp not on; unit inoperable.	Unit not plugged in.	Plug unit in.
	Circuit breaker – Underside left front of unit tripped.	Reset circuit breaker.
	Faulty on/off switch.	Replace switch.
Pilot lamp on but no raster.	Brightness turned full off.	Turn up brightness control.
	Monitor fuse open.	Repair or replace fuse. See the TV Monitor Manual.
	Monitor not plugged in.	Check monitor cord in rear of monitor.
	One or more monitor connectors not connected.	Check connections. TV Monitor Manual.
	Terminal power supply defective.	Repair terminal power supply. See Section 4.
Raster but no sync.	Defective control module.	Replace control module.
	Defective video monitor.	Repair or replace video monitor.
Sync but no video pattern.	Defective control module.	Replace control module.
	Defective video monitor.	Repair or replace video monitor.
Noise on screen; sync poor or nonexistent.	Defective control module.	Replace control module.
	Defective power supply.	Replace control module.

Figure 18 Fault Location

Fault	Probable Source of Trouble	Recommended Repair
Sync and video random characters; cursor may not be present.	Unit not initialized.	Turn unit off, wait 5 seconds, turn unit on.
	Defective control module.	Replace control module.
Characters broken or unintelligible.	Defective control module.	Replace control module.
Cursor but no cursor movement and no characters.	Defective control module.	Replace control module.
	Defective keyboard.	Repair or replace keyboard. Could be stuck key for a control character.
Cursor and characters but no cursor movement.	Defective control module.	Replace control module.
Cursor movement but no characters in system.	Defective keyboard.	Repair or replace keyboard. Could be stuck key.
Enters incorrect characters.	Defective control module.	Replace control module.
	Defective asynchronous serial interface drivers/receivers.	Replace control module.
	Defective keyboard.	Repair or replace keyboard. Character errors not bit-oriented.
Enters single character for all keys.	Defective keyboard.	Stuck key usually on key of character entered on the screen.
	Defective control module.	Replace control module.
Operable off line (local); not operable on line.	Defective asynchronous serial interface	Replace control module
	Defective control module.	Replace control module.

Figure 18 Fault Location (Continued)

6. DRAWINGS

The following drawings relate to the I200 terminal. Figure 19 shows the relationship between the module assembly numbers (APN 09200-G0X-XX) and the schematics.

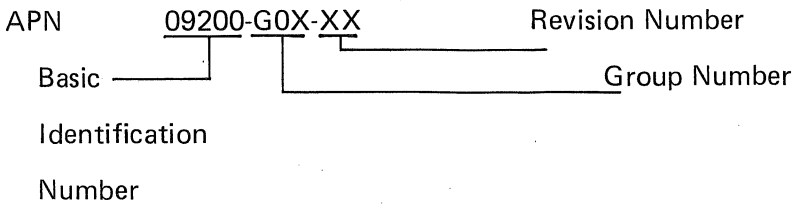

The X's denote various generations of the basic module.

6.1 MNEMONICS LIST

6.2 SCHEMATIC MAIN LOGIC INCLUDING POWER SUPPLY (8 Sheets)

6.3 KEYBOARD SCHEMATICS (17 Sheets)

Title	Assembly Part Number	Schematic
I/O Logic	APN 03194-G0X-XX	03192-2, 3
Control Logic	APN 03194-G0X-XX	03192-4, 5, 6
Memory Logic	APN 03194-G0X-XX	03192-7
Video Logic	APN 03194-G0X-XX	03192-8
Power Supply	APN 03194-G0X-XX	03192-1
TTY High Profile Keyboard (200/1)	APN 03246-G01-XX	1466 (KTC)
TTY Low Profile Keyboard (200/1)	APN 03246-G01-XX	1587 (KTC)
TTY Numeric Pad Keyboard (200/1)	APN 03247-G01-XX	1563 (KTC)
U/L Case Keyboard (E10) (200/3A)	APN 03248-G01-XX	1669 (KTC)
U/L Case Numeric Pad Keyboard (E10) (200/3)	APN 03236-G01-XX	1669 (KTC)
U/L Case Numeric Pad Keyboard (E20) (200/4) w/Function Keys	APN 03249-G01-XX	1668 (KTC)

Figure 19 Assembly to Schematic Reference Table

6.1 MNEMONICS LIST

Mnemonics	Definitions	PCB	Sheet	Schematic Location	PCB Chip Location
ACK	INPUT STROBE ACKNOWLEDGE	CONT	4	C8	L5
ACLRT	ACTIVATE CLEAR TIME	CONT	4	B2	N2
AINPUT	ENABLE LINE COUNTER FOR MEMORY ADDRESS	CONT	4	D2	N2
AUXCOPY	AUXILIARY COPY FROM OPTION	OPT	—	—	—
AUXIN	AUXILIARY INPUT ENABLE	OPT	—	—	—
BDRCLK	BUFFERED DATA RATE CLOCK TO OPTIONS	CONT	3	C4	N7
BELL	DECODED BELL COMMAND	CONT	4	D4	J5
BINPUT	ENABLE CHARACTER COUNTER FOR MEMORY ADDRESS	CONT	4	D3	N2
BLRQS	BUFFERED LOGICAL REQUEST TO SEND TO OPTIONS	CONT	3	C4	N7
BSDCLK	BUFFERED SERIAL DATA CLOCK TO OPTIONS	CONT	3	C4	N7
BSP	DECODED BACKSPACE COMMAND	CONT	4	D4	J5
BTBMT	BUFFERED TRANSMIT BUFFER EMPTY TO OPTIONS	CONT	3	C4	N7
BURBØ	BUFFERED RECEIVED DATA BIT TO OPTIONS	CONT	3	D4	M7
CØ	CHARACTER COUNTER EQUALS Ø	CONT	5	C5	J1
C4	CHARACTER COUNT TO MEMORY FROM TIMING CHAIN OR COUNTER	CONT	5	C2	D4
C79	CHARACTER COUNT EQUALS 79	CONT	5	D5	M4
CAPLED	CAPS LED	CONT	8	C4	F11
CAPS	CAPITOL LETTERS ONLY	CONT	8	C4	J2
CCCØ	CHARACTER COUNTER BIT Ø	CONT	5	C7	F4
CCLAS	CURSOR CHARACTER COUNTER CURSOR ADDRESS STROBE	CONT	5	B6	M1
CCOMP	CURSOR COMPARISON	CONT	7	C1	B7
CLALS	CURSOR LINE COUNTER CURSOR ADDRESS STROBE	CONT	5	B6	M1
CLCØ	CURSOR LINE COUNTER BIT Ø	CONT	6	C3	J2
CLEAR	DECODED ERASE SCREEN COMMAND	CONT	4	D5	H6
CLOCK	12.Ø12 MHz CLOCK	CONT	8	D7	D10
CLRT	CLEAR TIME	CONT	4	B4	N3
COF	CURSOR COUNTER OVERFLOW	CONT	5	C6	H4
COMPB	COMBINED BLANKING	CONT	8	A6	E12
COPY	EIA PRINTER COPY OUTPUT	CONT	2	D1	M12
CRD	CARRIAGE RETURN DELAYED	CONT	4	C4	P3
CS1	CONTROL STROBE TIME 1	CONT	4	C6	N5
CURAD	DECODED CURSOR ADDRESS COMMAND	CONT	4	C4	K5

Mnemonics	Definitions	PCB	Sheet	Schematic Location	PCB Chip Location
CURSOR	EQUALITY OF CURSOR COUNTERS AND TIMING CHAIN COUNTERS	CONT	5	C3	H5
DCLEAR	DECODED AND STROBED CLEAR SCREEN COMMAND	CONT	4	B5	N4
DCLKC	CHARACTER COUNT CLOCK (1.716 MHz)	CONT	8	D6	C10
DPCAB	EIA SIGNAL GROUND	CONT	2	C1	J1
DPCCD	EIA DATA TERMINAL READY	CONT	2	C1	M12
DPRBB	EIA RECEIVE DATA	CONT	2	D8	J1
DPRCB	EIA CLEAR TO SEND	CONT	2	C8	J1
DPRCC	EIA DATA SET READY	CONT	2	C8	J1
DPRCF	EIA CARRIER DETECT	CONT	2	C8	J1
DPTBA	EIA TRANSMIT DATA	CONT	2	C1	M12
DPTCA	EIA REQUEST TO SEND	CONT	2	C1	M12
DRCLK	DATA RATE CLOCK (924 KHz)	CONT	8	D8	H10
DS	INPUT DATA STROBE	CONT	3	B7	L6
ELC	END OF LINE COUNT (SLICE 9)	CONT	8	D4	B9
EOL	END OF LINE VIDEO LINE COUNTER	CONT	8	C5	H8
ERLC	END RASTER LINE COUNT (LAST SLICE ON SCREEN)	CONT	8	B2	A10
ERLINE	DECODED ERASE LINE COMMAND	CONT	4	C4	K5
ESCT	ENABLE SLICE COUNT TIME	CONT	8	C6	H9
FE	FRAMING ERROR	CONT	2	B4	P8
FSP	DECODED FORWARD SPACE COMMAND	CONT	4	D4	J5
HBLANK	HORIZONTAL BLANK SIGNAL	CONT	8	C6	H9
HDRIVE	HORIZONTAL DRIVE OUTPUT TO MONITOR	CONT	8	B3	H11
HDRIVES	HORIZONTAL DRIVE SOURCE	CONT	8	C6	H9
HOLD	RESET UART STROBE AFTER INPUT	CONT	2	A4	L11
HOME	DECODED CURSOR HOME COMMAND	CONT	4	D4	K5
HSYNC	HORIZONTAL SYNC	CONT	8	C4	C9
IDC	20 Ma. CURRENT SOURCE	CONT	2	B1	TB1
ILC	INHIBIT CHARACTER COUNT INPUT CURSOR ADDRESS (ENABLE LINE)	CONT	5	B7	L3
ILL	INHIBIT LINE COUNT INPUT CURSOR ADDRESS (ENABLE CHARACTER)	CONT	5	B7	L3
INHIN	INHIBIT INPUT TO MEMORY	CONT	5	A6	N1
INRES	INITIALIZE RESET	CONT	4	B7	M5
INRET	CURRENT LOOP INPUT RETURN	CONT	2	C8	TB1
IT	INPUT TIME	CONT	4	B4	N3
KBBØ	KEYBOARD BIT Ø	KBD	—	—	—
KBBRK	KEYBOARD BREAK KEY SIGNAL	KBD	—	—	—
KBLF	KEYBOARD LOCK FUNCTION	CONT	4	B6	P4
KBLINE	KEYBOARD LINE/LOCAL INPUT	KBD	—	—	—

Mnemonics	Definitions	PCB	Sheet	Schematic Location	PCB Chip Location
KBLOCK	DECODED KBD LOCK COMMAND	CONT	4	D4	J5
KBSTR	KEYBOARD STROBE	KBD	—	—	—
KBUNLOCK	DECODED KBD UNLOCK COMMAND	CONT	4	D4	J5
LØ	LINE COUNT BIT Ø	CONT	6	B4	D2
L23	LINE 23	CONT	6	C4	E3
LCENB	LOWER CASE ENABLE	KBD	—	—	—
LCOPY	LOCAL COPY SWITCH	CONT	2	D7	K10
LF	DECODED LINE FEED COMMAND	CONT	4	D4	J5
LINE	ON LINE	CONT	3	B3	J6
LRQS	LOGICAL REQUEST TO SEND	CONT	2	D3	L9
LU	LINE UP	CONT	6	C3	J3
ODD	ODD/EVEN PARITY SWITCH	CONT	2	D7	K10
OUT	CURRENT LOOP OUTPUT	CONT	2	B1	TB1
PARITY	MARK/SPACE PARITY SWITCH	CONT	2	D7	K10
PCPYOFF	PRINT COPY OFF	CONT	4	C3	K5
PCPYON	PRINT COPY ON	CONT	4	C3	K5
PCOPY	PRINT COPY FUNCTION	CONT	2	D2	J9
PIP	FUNCTION DECODER PROM INPUT PULSE	CONT	4	D7	L5
PLFP	POWER LINE FRAME PULSE	CONT	1	C4	—
PLSP	POWER LINE SYNC PULSE	CONT	8	C6	E10
PROM	KBD TRANSLATE PROM PRESENT	CONT	3	C6	N6
RAM5	RAM MEMORY OUTPUT BIT 5	CONT	7	C1	B7
RAWDC	UNFILTERED +5 VOLTS FOR OPTION	CONT	1	D3	—
RCØ	ROLL COUNTER BIT Ø	CONT	6	D7	F1
RCVBØ	RECEIVED DATA BIT Ø	CONT	4	D6	H7
RCVDR	RECEIVE DATA RATE (16X)	CONT	2	D5	N9
RET	CURRENT SOURCE RETURN (GROUND)	CONT	2	A1	TB1
ROLL	ROLL MODE SWITCH	CONT	3	D7	J7
ROLLT	ROLL TIME	CONT	4	D4	J5
RVK	REVERSED VIDEO SWITCH	CONT	8	B5	K11
SCLKØ	SLICE COUNTER BIT Ø	CONT	8	D4	B9
SDO	SERIAL DATA OUTPUT	CONT	2	A4	M8
SDCLK	SERIAL DATA CLOCK	CONT	2	C5	N8
SDI	SERIAL DATA INPUT	CONT	2	B5	N9
SRQS	STRAPPED REQUEST TO SEND	CONT	2	B5	K11
SSB	STOP BIT SWITCH	CONT	2	D7	K10
STR	KEYBOARD SYNCHRONIZED STROBE	CONT	2	A5	K8
STRBE	RECEIVED DATA STROBE	CONT	2	B4	P8
TB3	TRANSLATED CURSOR ADDRESS VALUE	CONT	5	B8	L3
TBMT	TRANSMIT BUFFER EMPTY	CONT	2	B3	M9
TKBØ	BUFFERED KEYBOARD BITS	CONT	3	C7	N6

Mnemonics	Definitions	PCB	Sheet	Schematic Location	PCB Chip Location
UC	UPPER CASE	CONT	8	B8	E11
UP	DECODED CURSOR UP COMMAND	CONT	4	D4	J5
URBØ	UART RECEIVED BIT Ø	CONT	2	D4	P8
USK3	UNSCRAMBLED SLICE CLK BIT 3	CONT	8	B8	E11
VBLANK	VERTICAL BLANKING SIGNAL	CONT	8	D2	E8
VC79	VIDEO CHARACTER COUNT 79	CONT	8	C5	F9
VCCØ	VIDEO CHARACTER COUNTER BIT Ø (MAIN TIMING CHAIN)	CONT	8	D6	D9
VDRIVE	VERTICAL DRIVE TO MONITOR	CONT	8	D2	E8
VIDEO	VIDEO OUTPUT TO MONITOR	CONT	8	B3	Q11
VIDRET	VIDEO OUTPUT RETURN (GROUND)	CONT	8	B3	GND
VLCØ	VIDEO LINE COUNTER BIT Ø (MAIN TIMING CHAIN)	CONT	8	C2	D8
VMA1Ø	VIDEO MEMORY ADDRESS BIT 1Ø	CONT	6	B3	D1
VRCLK	VIDEO SHIFT REGISTER CLOCK	CONT	8	A4	J11
VSRIØ	VIDEO SHIFT REGISTER INPUT BIT	CONT	7	A4	B8
WRITE	WRITE DATA IN MEMORY	CONT	4	B1	N2
WRTP	WRITE PULSE	CONT	8	B4	A10
12L	TWLEVE LINE MODE	CONT	6	D7	H2
+2ØMa	CURRENT LOOP INPUT FOR 2ØMa.	CONT	2	C8	TB1
+6ØMa	CURRENT LOOP INPUT FOR 6ØMz.	CONT	2	C8	TB1

APPENDIX

REVISIONS				
SYM	ZONE	DESCRIPTION	DATE	APPD
A		PRODUCTION RELEASE	7/21/77	DBB

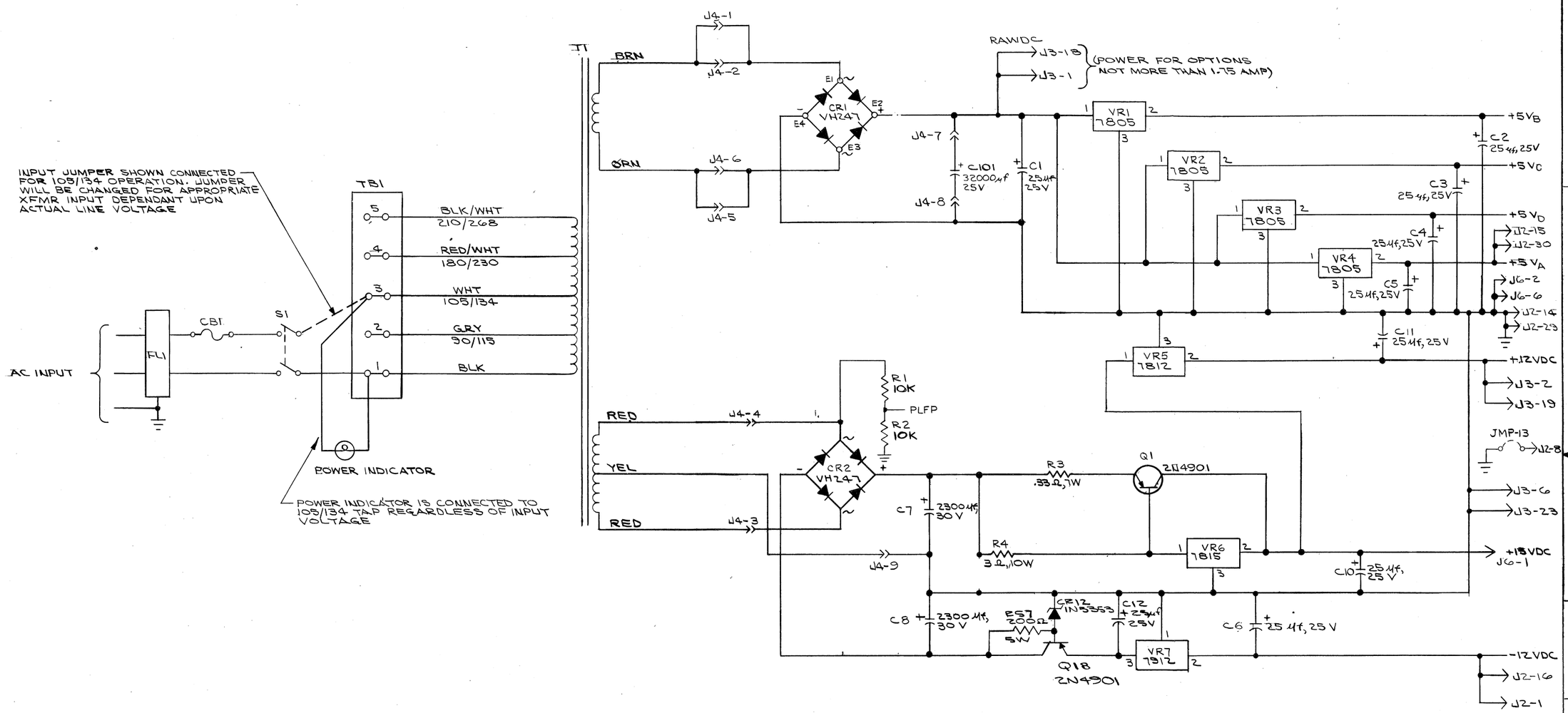

NOTES: (UNLESS OTHERWISE SPECIFIED)

1. RESISTORS ARE 1/4W, 5%
2. VR1, VR2, VR3, VR4, VR6 + Q1 ARE MOUNTED ON THERMALLOY HEAT SINKS, PART NO. 6054B
3. CR1 & CR2 HAVE MOUNTED ON THEM THERMALLOY HEAT SINK, PART NO. 6107B
4. VR5 + VR7 ARE MOUNTED ON THERMALLOY HEAT SINKS, PART NO. 6107B.
5. Q12 IS MOUNTED ON THERMALLOY HEAT SINK PART NO. 6013B.

QTY PER DASH NO.	PART OR IDENTIFYING NO.	INFOTON PART NO.	NOMENCLATURE OR DESCRIPTION	NOTE	ITEM NO.

PARTS LIST

MATERIAL

DR H. L. Barnes
CHK G. Babcock 6/1/77
APPD G. Babcock 7/21/77
APPD J. Nagpal 7/21/77

INFOTON INCORPORATED
SECOND AVENUE
BURLINGTON, MASSACHUSETTS

SCHEMATIC
POWER SECTION
EI 200

PROPRIETARY NOTICE: This document contains proprietary information of INFOTON INCORPORATED and neither the document nor said proprietary information shall be published, reproduced, copied, disclosed or used for any purpose other than consideration of this document without the express written permission of a duly authorized representative of said company.

SIZE D | 03192 | REV A

NEXT ASSEMBLY | PROJ. NO. | SCALE NONE | DATE 17 FEB 77 | SHEET 1 OF 3

REVISIONS				
SYM	ZONE	DESCRIPTION	DATE	APPD
		SEE SHEET 1		

NOTES:

1. ALL +5 VOLTAGE ON THIS SHEET MUST CONNECT TO +5VA ON POWER SECTION.
2. TRANSISTOR Q MAY BE EITHER A 2N5401 OR A MM4001.

QTY PER DASH NO.	PART OR IDENTIFYING NO.	INFOTON PART NO.	NOMENCLATURE OR DESCRIPTION	NOTE	ITEM NO.

PARTS LIST

MATERIAL	DR M.L. Barnes	INFOTON INCORPORATED SECOND AVENUE BURLINGTON, MASSACHUSETTS	
PROPRIETARY NOTICE: This document contains proprietary information of INFOTON INCORPORATED and neither the document nor said proprietary information shall be published, reproduced, copied, disclosed or used for any purpose other than consideration of this document without the express written permission of a duly authorized representative of said company.	CHK G. Babcock 6/1/77 APPD G. Babcock 7/21/77 APPD S. Rapps 7/21/77	SCHEMATIC I/O SECTION I.T. 200	
NEXT ASSEMBLY	PROJ. NO.	SIZE D / 03192 / REV A	
	SCALE NONE	DATE 17 FEB 77	SHEET 2 OF 8

REVISIONS				
SYM	ZONE	DESCRIPTION	DATE	APPD
		SEE SHEET 1		

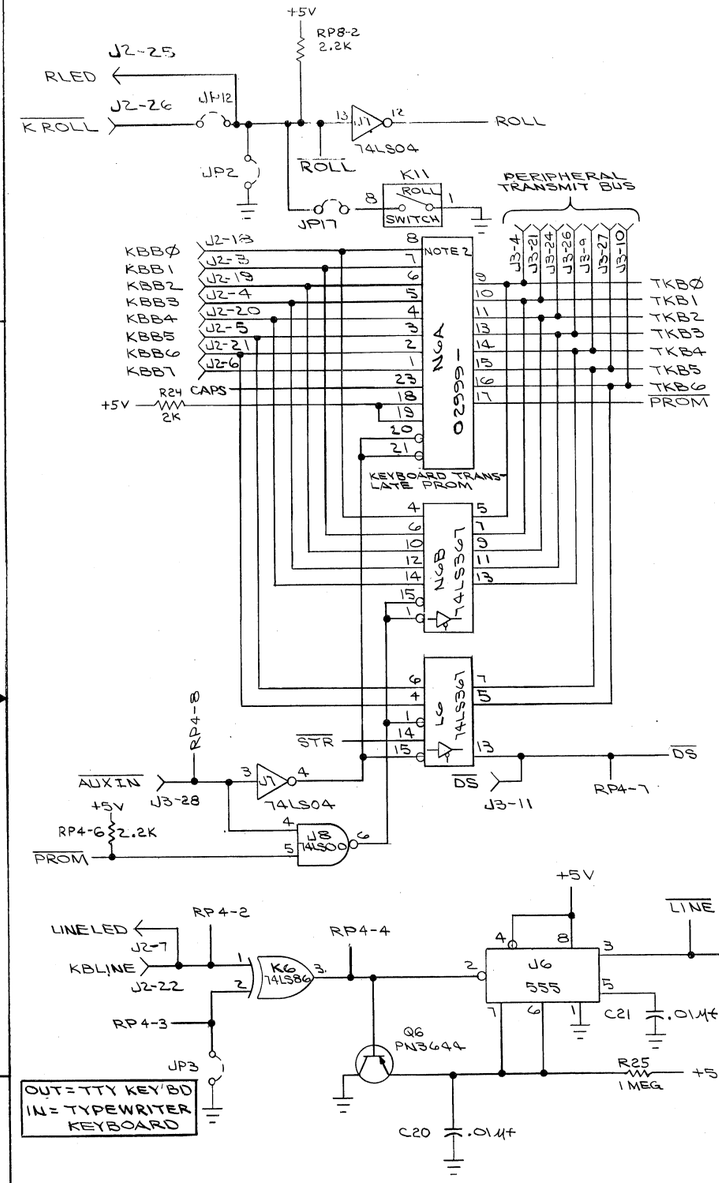

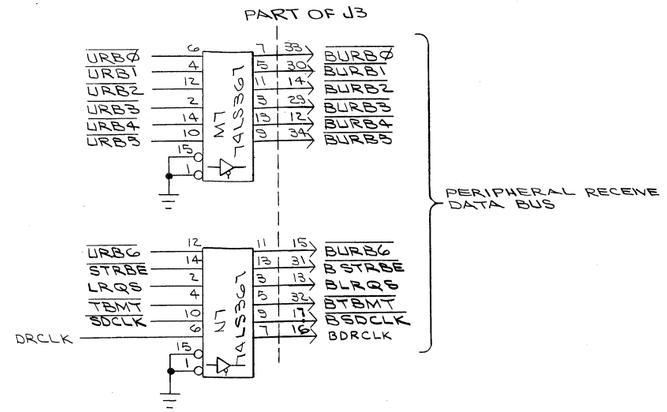

NOTES:

1. ALL +5 VOLTAGE ON THIS SHEET MUST CONNECT TO +5VA ON POWER SECTION.
2. THE KEYBOARD TRANSLATOR PROM IS USED FOR E10 & E20 KEYBOARDS FOR NON-QWERTY VERSIONS. WHEN PROM IS INSTALLED N6B IS NOT USED.

QTY PER DASH NO.	PART OR IDENTIFYING NO.	INFOTON PART NO.	NOMENCLATURE OR DESCRIPTION	NOTE	ITEM NO.
			PARTS LIST		

MATERIAL	DR W.F. Barnes	INFOTON INCORPORATED SECOND AVENUE BURLINGTON, MASSACHUSETTS
	CHK B Babcock 6/1/77	
PROPRIETARY NOTICE: This document contains proprietary information of INFOTON INCORPORATED and neither the document nor said proprietary information shall be published, reproduced, copied, disclosed or used for any purpose other than consideration of this document without the express written permission of a duly authorized representative of said company.	APPD B Babcock 7/21/77	SCHEMATIC I/O SECTION I.I.- 200
	APPD J Kappel 7/21/77	SIZE D 03192 REV A
NEXT ASSEMBLY	PROJ. NO.	SCALE NONE DATE 23FEB77 SHEET 3 OF 8

REVISIONS			
SYM	ZONE	DESCRIPTION	DATE APPD

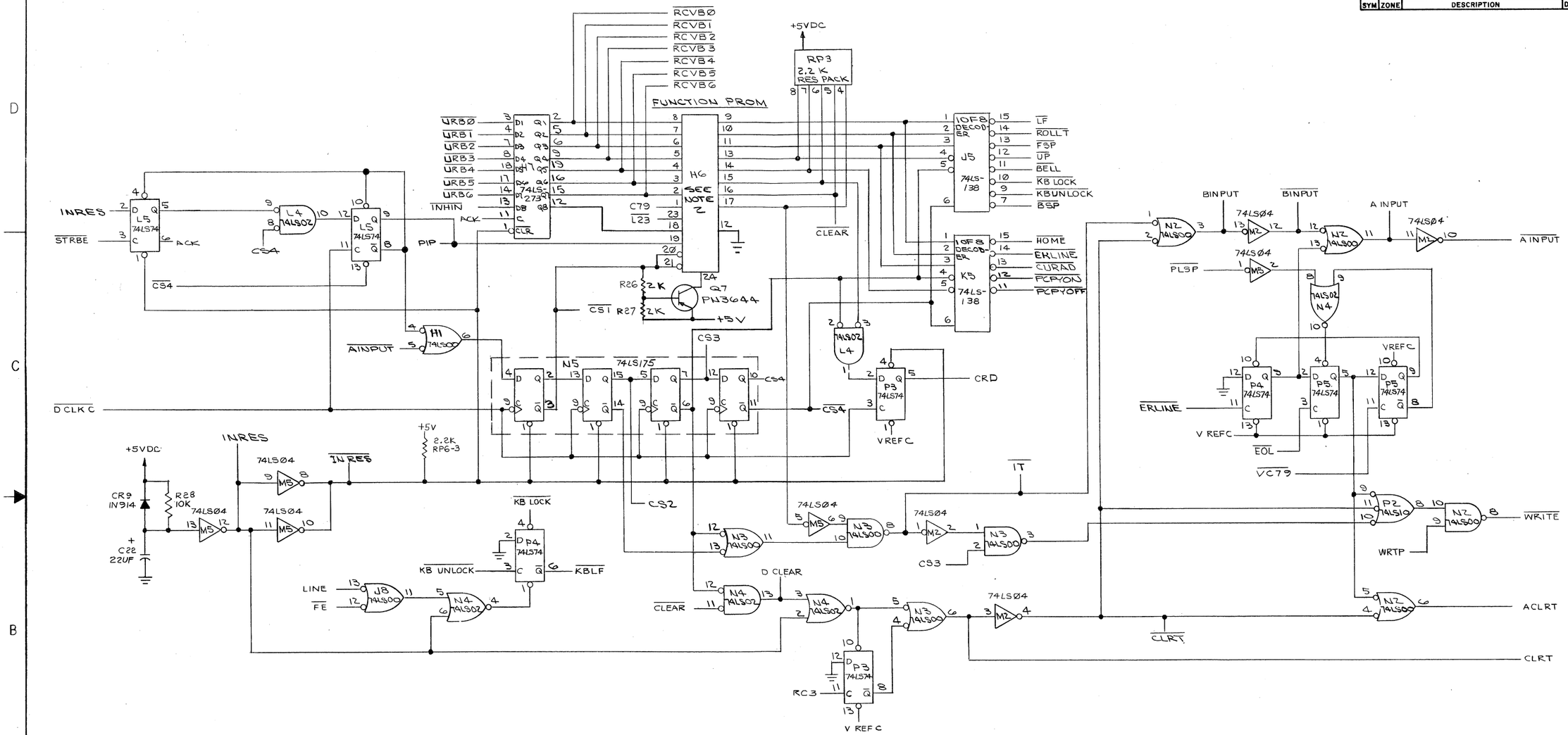

NOTES:

1. ALL +5 VOLTAGE ON THIS SHEET MUST CONNECT TO +5VB ON POWER SECTION.
2. 02999-031 PROM IS USED FOR NON-SCROLL VERSION.
   02999-030 PROM IS USED FOR SCROLL VERSION.

QTY PER DASH NO.	PART OR IDENTIFYING NO.	INFOTON PART NO.	NOMENCLATURE OR DESCRIPTION	NOTE	ITEM NO.

PARTS LIST

MATERIAL —//—

DR L.D. Fuller
CHK J. Babcock 6/1/77
APPD H. Babcock 7/21/77
APPD S. Rappaport 7/21/77

PROPRIETARY NOTICE: This document contains proprietary information of INFOTON INCORPORATED and neither the document nor said proprietary information shall be published, reproduced, copied, disclosed or used for any purpose other than consideration of this document without the express written permission of a duly authorized representative of said company.

INFOTON INCORPORATED
SECOND AVENUE
BURLINGTON, MASSACHUSETTS

CONTROL LOGIC

NEXT ASSEMBLY	PROJ. NO.	SCALE NONE	SIZE D	03192	REV A
		DATE 2/28/77	SHEET 4 OF 8		

REVISIONS				
SYM	ZONE	DESCRIPTION	DATE	APPD
		SEE SHEET 1		

JP5 IN = BELL ON CURSOR POSITION 70

JP5 OUT = NO BELL ON CURSOR POSITION 70

BELL F

MEMORY ADDRESS FOR REFRESH

MEMORY ADDRESS FOR INPUT

CURSOR CHAR COUNTERS

CURSOR ADDRESS TRANSLATOR

IN = STRAIGHT BINARY CURSOR ADDRESSES
OUT = OCTAL 40 OFFSET CURSOR ADDRESSES

CURSOR POSITION COMPARATORS

NOTES:

1. ALL +5 VOLTAGE ON THIS SHEET MUST CONNECT TO +5 VB ON POWER SECTION.
3. Δ INDICATES SECTIONS OF SAME IC.

QTY PER DASH NO.	PART OR IDENTIFYING NO.	INFOTON PART NO.	NOMENCLATURE OR DESCRIPTION	NOTE	ITEM NO.

PARTS LIST

MATERIAL

PROPRIETARY NOTICE: This document contains proprietary information of INFOTON INCORPORATED and neither the document nor said proprietary information shall be published, reproduced, copied, disclosed or used for any purpose other than consideration of this document without the express written permission of a duly authorized representative of said company.

DR M.F. Barnes
CHK G Babcock 4/1/77
APPD G Babcock 4/21/77
APPD Rapped 7/1/77

INFOTON INCORPORATED
SECOND AVENUE
BURLINGTON, MASSACHUSETTS

SCHEMATIC
CONTROL (CURSOR CHAR COUNTER)
I.L-200

NEXT ASSEMBLY	PROJ. NO.	SCALE NONE	SIZE D	03192	REV A

DATE 25FEB77 SHEET 5 OF 8

REVISIONS			
SYM	ZONE	DESCRIPTION	DATE APPD

ROLL COUNTERS

$\overline{COF}$
$\overline{CLRT}$
$\overline{ROLLT}$
$\overline{INRES}$
D CLEAR
+5VDC R35 2K
IN=12 LINE DISPLAY
OUT=24 LINE DISPLAY
JP6
12L
TBØ
+5V R32 2K
$\overline{RCVBØ}$
$\overline{ROLL}$
$\overline{CLALS}$
$\overline{RCVB1}$
$\overline{RCVB2}$
TB3
TB4
CLALS
TB1
TB2
RP2-3
R33 2K
$\overline{INRES}$
$\overline{HOME}$
LINE COUNTER
VREF7
R37 2K
+5V
+5v R36 2K
$\overline{LF}$
LU
$\overline{ROLL}$
CLCØ
+5VDC
R34 2K
CLC4
CLC3
CLC2
CLC1
VREF7
$\overline{UP}$
$\overline{L23}$
MEMORY LINE ADDRESS FOR INPUT
LØ
L1
L2
L3
L4
AINPUT
RCØ
RC1
RC2
RC3
RC4
+5V
CLRT
LAR PROM
C4
C5
C6
C7
VMA4
VMA5
VMA6
VMA7
VMA8
VMA9
$\overline{VMA1Ø}$
VMA1Ø

MEMORY LINE ADDRESS FOR REFRESH

VLCØ
VLC1
VLC2
VLC3
VLC4
AINPUT
LØ
L1
L2
L3
L4

NOTES:

1. ALL +5V DC VOLTAGES ON THIS SHEET MUST CONNECT TO +5VB ON POWER SUPPLY.

QTY PER DASH NO.	PART OR IDENTIFYING NO.	INFOTON PART NO.	NOMENCLATURE OR DESCRIPTION	NOTE	ITEM NO.

PARTS LIST

MATERIAL —

DR L. O. Ledlow
CHK D Babcock 6/1/77
APPD D Babcock 7/21/77
APPD J Rappa 7/21/77

INFOTON INCORPORATED
SECOND AVENUE
BURLINGTON, MASSACHUSETTS

SCHEMATIC
LINE COUNTER & ROLL COUNTER

PROPRIETARY NOTICE: This document contains proprietary information of INFOTON INCORPORATED and neither the document nor said proprietary information shall be published, reproduced, copied, disclosed or used for any purpose other than consideration of this document without the express written permission of a duly authorized representative of said company.

NEXT ASSEMBLY —
PROJ. NO. —
SIZE
SCALE NONE
DATE 3/1/77
SHEET 6 OF 8
03192
REV A

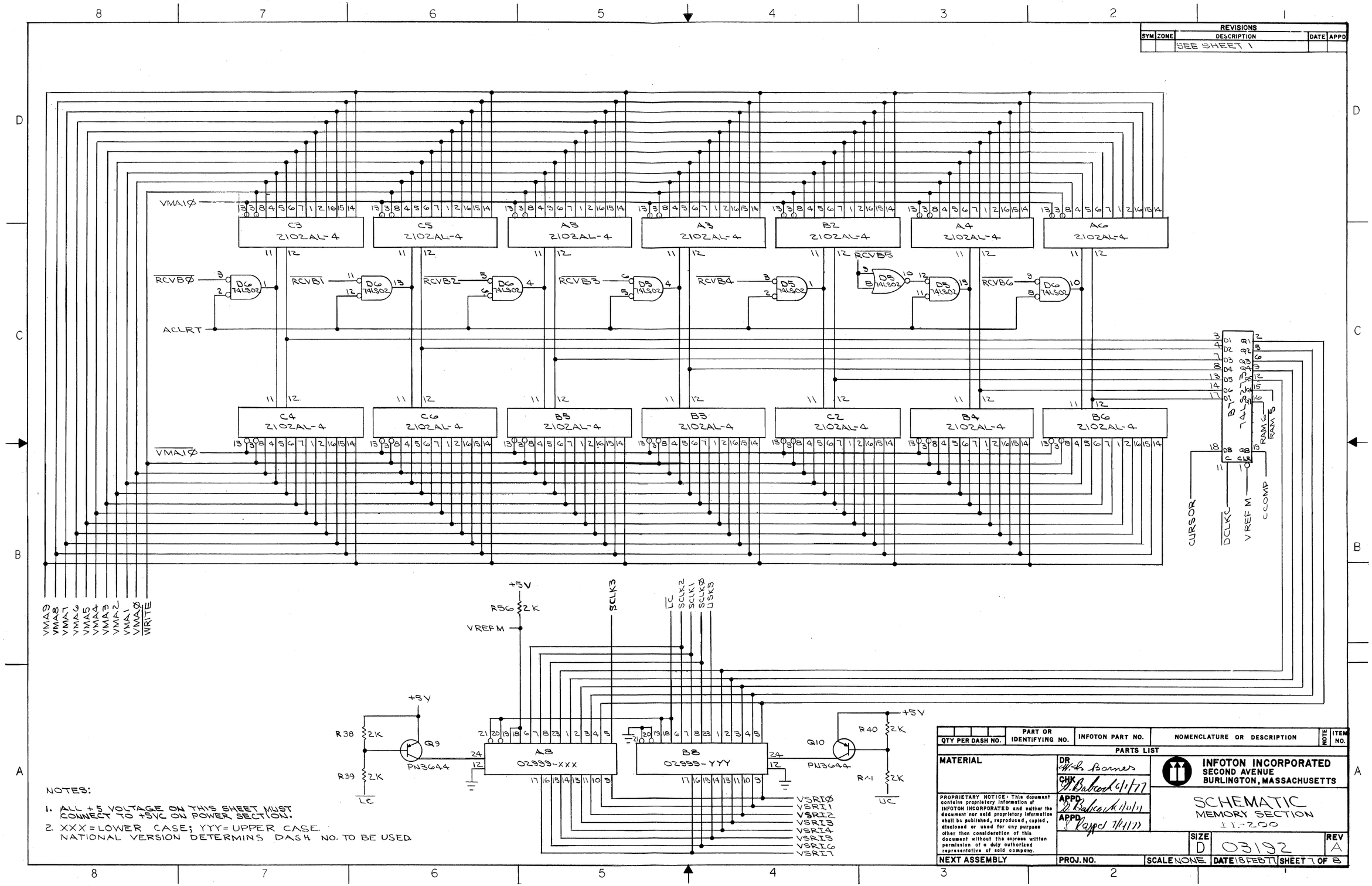

REVISIONS
SYM ZONE DESCRIPTION DATE APPD
SEE SHEET 1
VMA1Ø
C3 2102AL-4
C5 2102AL-4
A5 2102AL-4
A3 2102AL-4
B2 2102AL-4
A4 2102AL-4
A6 2102AL-4
RCVBØ
RCVB1
RCVB2
RCVB3
RCVB4
RCVB5
RCVB6
D6 74LS02
D5 74LS02
ACLRT
C4 2102AL-4
C6 2102AL-4
B5 2102AL-4
B3 2102AL-4
C2 2102AL-4
B4 2102AL-4
B6 2102AL-4
B7 74LS273
RAM6
RAM5
CURSOR
DCLKC
VREFM
CCOMP
VMA9
VMA8
VMA7
VMA6
VMA5
VMA4
VMA3
VMA2
VMA1
VMAØ
WRITE
+5V
R56 2K
VREFM
SCLK3
LC
SCLK2
SCLK1
SCLKØ
USK3
R38 2K
R39 2K
Q9 PN3644
A8 02999-XXX
B8 02999-YYY
Q10 PN3644
R40 2K
R41 2K
VSRIØ
VSRI1
VSRI2
VSRI3
VSRI4
VSRI5
VSRI6
VSRI7
NOTES:
1. ALL +5 VOLTAGE ON THIS SHEET MUST CONNECT TO +5VC ON POWER SECTION.
2. XXX = LOWER CASE; YYY = UPPER CASE. NATIONAL VERSION DETERMINS DASH NO. TO BE USED.
QTY PER DASH NO.
PART OR IDENTIFYING NO.
INFOTON PART NO.
NOMENCLATURE OR DESCRIPTION
NOTE
ITEM NO.
PARTS LIST
MATERIAL
DR W. L. Barnes
CHK J. Babcock 6/1/77
APPD J. Babcock 6/21/77
APPD S. Rappel 7/1/77
PROPRIETARY NOTICE: This document contains proprietary information of INFOTON INCORPORATED and neither the document nor said proprietary information shall be published, reproduced, copied, disclosed or used for any purpose other than consideration of this document without the express written permission of a duly authorized representative of said company.
INFOTON INCORPORATED
SECOND AVENUE
BURLINGTON, MASSACHUSETTS
SCHEMATIC
MEMORY SECTION
11-200
SIZE D
03192
REV A
NEXT ASSEMBLY
PROJ. NO.
SCALE NONE
DATE 18 FEB 77
SHEET 7 OF 8

REVISIONS				
SYM	ZONE	DESCRIPTION	DATE	APPD
		SEE SHEET 1		

NOTES:
1. ALL +5 VOLTAGE ON THIS SHEET MUST BE CONNECTED TO +5VD IN POWER SECTION.
2. * INDICATES IC IN SAME PACK

QTY PER DASH NO.	PART OR IDENTIFYING NO.	INFOTON PART NO.	NOMENCLATURE OR DESCRIPTION	NOTE	ITEM NO.

PARTS LIST

MATERIAL	DR Mich. Barnes	INFOTON INCORPORATED SECOND AVENUE BURLINGTON, MASSACHUSETTS
PROPRIETARY NOTICE: This document contains proprietary information of INFOTON INCORPORATED and neither the document nor said proprietary information shall be published, reproduced, copied, disclosed or used for any purpose other than consideration of this document without the express written permission of a duly authorized representative of said company.	CHK D Babcock 6/1/77 APPD D Babcock 11/21/11 APPD Raypel 7/21/77	SCHEMATIC VIDEO SECTION II.-2.00
NEXT ASSEMBLY	PROJ. NO.	SIZE D 03192 REV A SCALE NONE DATE 25FEB77 SHEET 8 OF 8

EFF.	REV.	ECO	BY	DESCRIPTION	APP.	DATE
—	—	—	BN	PROTO RELEASE	[illegible]	1-6-77
~	~	~	SK	REL. TO PROD	[illegible]	5-9-77

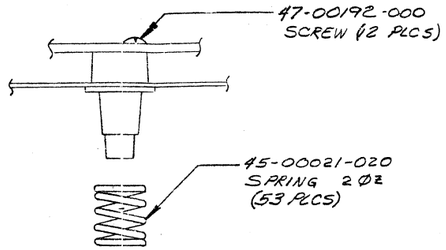

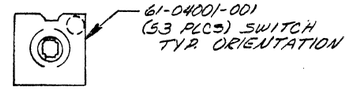

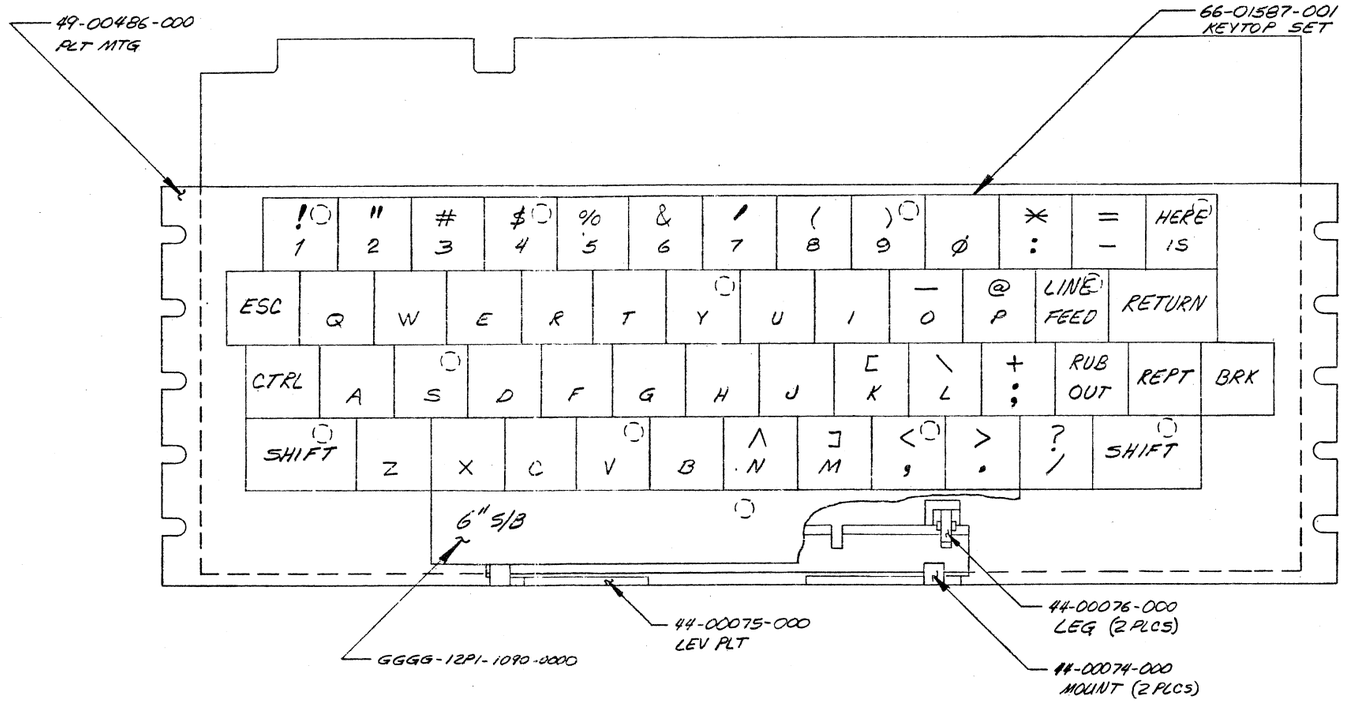

-001 ASSY

PARTIAL: SEE SH 1 FOR ELEC. ASSY

3. KEYBOARD IS STEPPED LOW PROFILE
2. ALL PLUNGERS ARE CENTERED
1. APPLY DATE/SERIAL NO. ADHESIVE TAG TO COMP. SIDE OF PCB

NOTES:

NOTICE OF PROPRIETARY INFORMATION

INFORMATION CONTAINED HEREIN IS PROPRIETARY AND IS PROPERTY OF KEY TRONIC CORPORATION. WHERE FURNISHED WITH A PROPOSAL THE RECIPIENT SHALL USE IT SOLELY TO EVALUATE THE PROPOSAL WHERE FURNISHED TO A CUSTOMER IT SHALL BE USED SOLELY FOR PURPOSES OF INSPECTION, INSTALLATION OR MAINTENANCE. WHERE FURNISHED TO A SUPPLIER IT SHALL BE USED SOLELY IN THE PERFORMANCE OF WORK CONTRACTED FOR BY THIS COMPANY.

THE INFORMATION SHALL NOT BE USED OR DISCLOSED BY THE RECIPIENT FOR ANY OTHER PURPOSE WHATSOEVER

MANUFACTURE PARTS AND/OR ASSY'S PER K.T.C. DOCUMENT:
M 006
M 007
M 011

USED ON: KTC STD

UNLESS OTHERWISE NOTED ALL DIMENSIONS ARE IN INCHES
.XXX DIMENSION NOT TO SCALE

RELEASED
APP. [signature] 1/6/77
CH. [signature] 1/7/77
DR. BN

TOL. EXCEPT AS NOTED
HOLE DIA.
FRACT. ± 1/64"
XX ± .01"
XXX ± .005"
ANG. ± 1°

ITEM	PART NO.	DESCRIPTION	QTY.

SCALE: FULL
TITLE: KEYBOARD ASSY (MECH & KEYTOP ASSY)

key tronic corporation
SPOKANE, WASH., U.S.A.

DWG. NO. 35-01587
SHEET 3 OF
C

EFF.	REV.	ECO	BY	DESCRIPTION	APP.	DATE
—	—	—	E.K.	PROTO RELEASE	[illegible]	1-6-77
~	~	~	R.L.	REL TO MFG	[illegible]	5-3-77

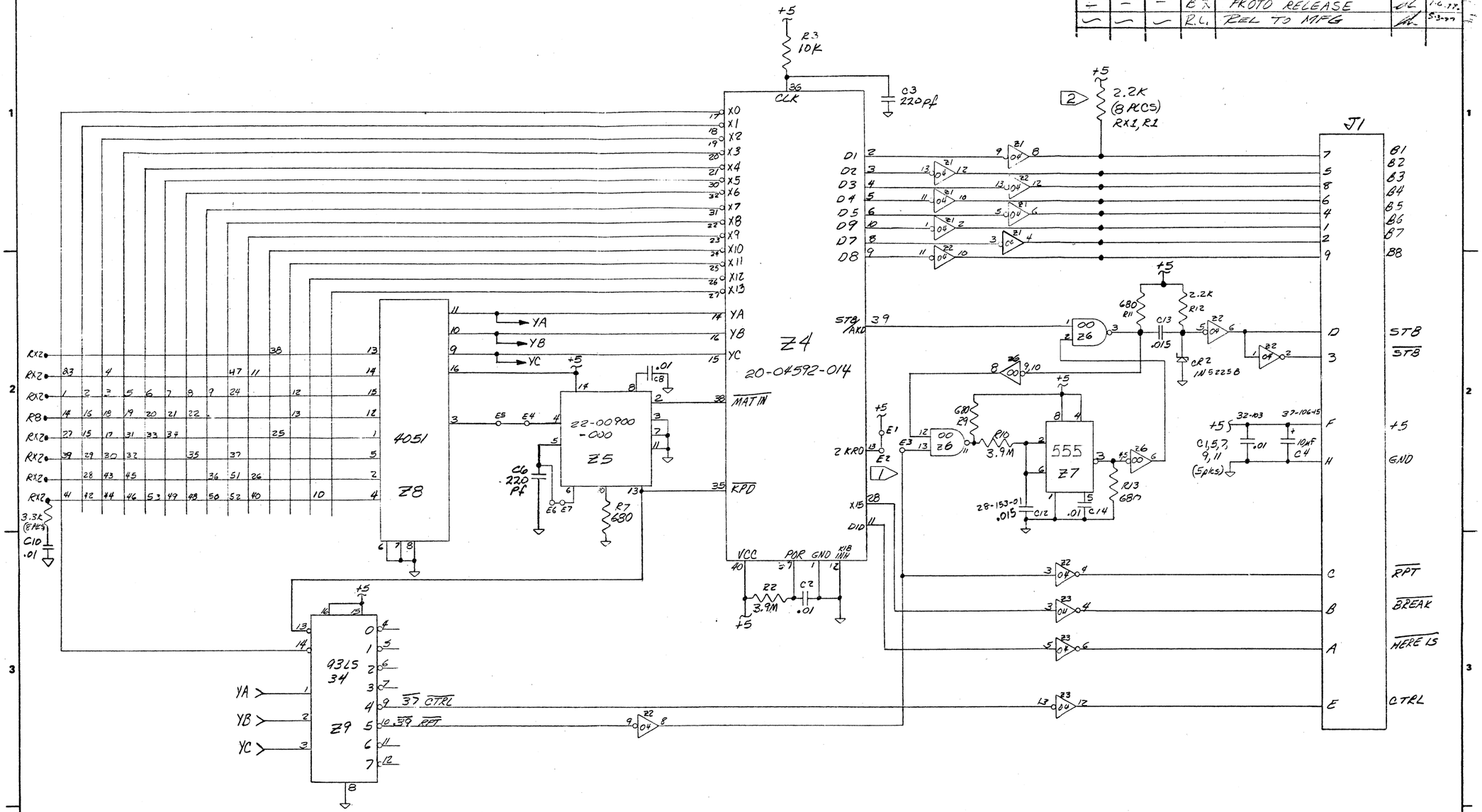

2 NOT INSTALLED FOR -001

1 E1 JUMPERED TO E2 FOR 2 KRO, E2 TO E3 FOR NKRO WITH 2 KRO DURING REPEATING

NOTES:

NOTICE OF PROPRIETARY INFORMATION

INFORMATION CONTAINED HEREIN IS PROPRIETARY AND IS PROPERTY OF KEY TRONIC CORPORATION. WHERE FURNISHED WITH A PROPOSAL, THE RECIPIENT SHALL USE IT SOLELY TO EVALUATE THE PROPOSAL WHERE FURNISHED TO A CUSTOMER IT SHALL BE USED SOLELY FOR PURPOSES OF INSPECTION, INSTALLATION OR MAINTENANCE. WHERE FURNISHED TO A SUPPLIER, IT SHALL BE USED SOLELY IN THE PERFORMANCE OF WORK CONTRACTED FOR BY THIS COMPANY.

THE INFORMATION SHALL NOT BE USED OR DISCLOSED BY THE RECIPIENT FOR ANY OTHER PURPOSE WHATSOEVER

MANUFACTURE PARTS AND/OR ASSY'S PER K.T.C. DOCUMENT:

UNLESS OTHERWISE NOTED ALL DIMENSIONS ARE IN INCHES

.XXX DIMENSION NOT TO SCALE

USED ON: XTC STD

RELEASED

APP. [illegible] 1/14/77

CH.

DR. [illegible]

TOL. EXCEPT AS NOTED

HOLE DIA.

FRACT. ± 1/64"
XX ± .01"
XXX ± .005"
ANG. ± 1°

ITEM	PART NO.	DESCRIPTION	QTY.

SCALE ~

TITLE: SCHEMATIC

key tronic corporation
SPOKANE, WASH., U.S.A.

DWG. NO. 25-01537

SHEET 1 OF 1

C

EFF.	REV.	REC.	ECO	BY	DESCRIPTION	APP	DATE
—	—	—	—	3N	PROTO RELEASE	[illegible]	1-4-77
~	~	~	~	SK	REL. TO PROD.	[illegible]	5-3-77

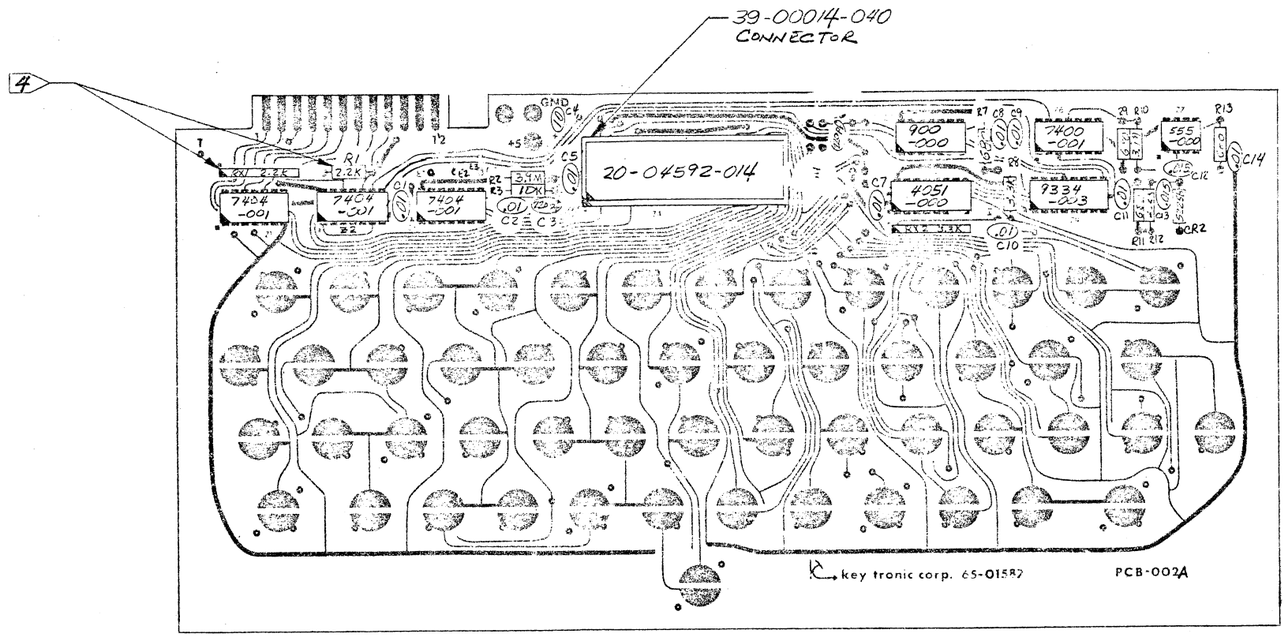

-001, -003, & -004 ASSY'S

PARTIAL: SEE SH. 3 FOR MECH & KEYTOPS ASSY OF -001
SH 4 FOR MECH & KEYTOPS ASSY OF -003
SH 5 FOR MECH & KEYTOPS ASSY OF -004

4 NOT INSTALLED ON -001 ONLY
3. CAPACITOR VALUES IN UF

2. APPLY APPROPRIATE DASH NO. AFTER KTC PART NUMBER
1. APPLY DATE-SERIAL NO. PRESSURE ADHESIVE TAG, TO COMPONENT SIDE OF PCB.

NOTES: UNLESS OTHERWISE SPECIFIED

MANUFACTURE PARTS AND OR ASSY'S PER K.T.C. DOCUMENT: M006 M007

UNLESS OTHERWISE NOTED ALL DIMENSIONS ARE IN INCHES
XXX DIMENSION NOT TO SCALE
USED ON: KTC STD
RELEASED: [illegible] 1/4/77
DR. BH 12/6/76

TOL EXCEPT AS NOTED
HOLE DIA

ITEM | PART NO. | DESCRIPTION | QTY
SCALE | TITLE: KEYBOARD ASSY (ELECT. ASSY.)

key tronic corporation
SPOKANE, WASH. U.S.A.

65-01587

EFF.	REV.	ECO	BY	DESCRIPTION	APP.	DATE
	~	~	RC	RELEASE TO PRODUCTION	[illegible]	4-77
–	A	3304	AS	CHG SCREW P/N TO -C0192	[illegible]	5-4-77

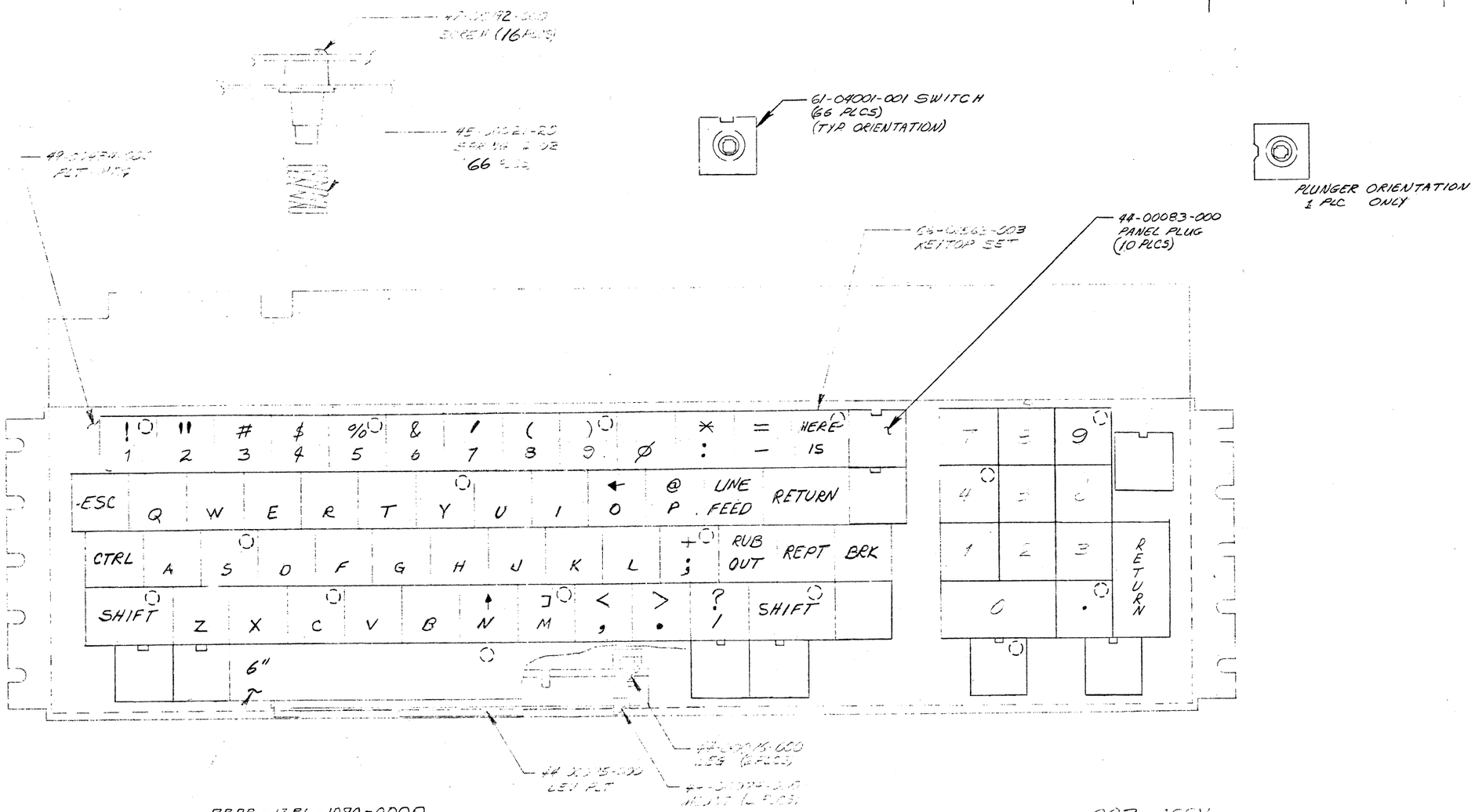

4. KEYBOARD IS STEPPED LOW PROFILE
3. ALL PLUNGERS ARE CENTERED
2. APPLY APPROPRIATE DASH NO AFTER KTC PART NO
1. APPLY DATE/SERIAL PRESSURE ADHESIVE TAG TO COMP. SIDE OF PCB

UNLESS OTHERWISE NOTED ALL DIMENSIONS ARE IN INCHES	TOL. EXCEPT AS NOTED	ITEM	PART NO.	DESCRIPTION	QTY.
DIMENSION NOT TO SCALE	HOLE	SCALE		TITLE	
USED ON: KTC STD		key tronic			DWG. NO. 65-01563
RELEASED					SHEET 5

EFF.	REV.	ECO	BY	DESCRIPTION	APP.	DATE
—	—	—	BH	PROTO RELEASE	[illegible]	1/4/77
	~	—	RL	RELEASE TO MANUFACTURE	[illegible]	4/77

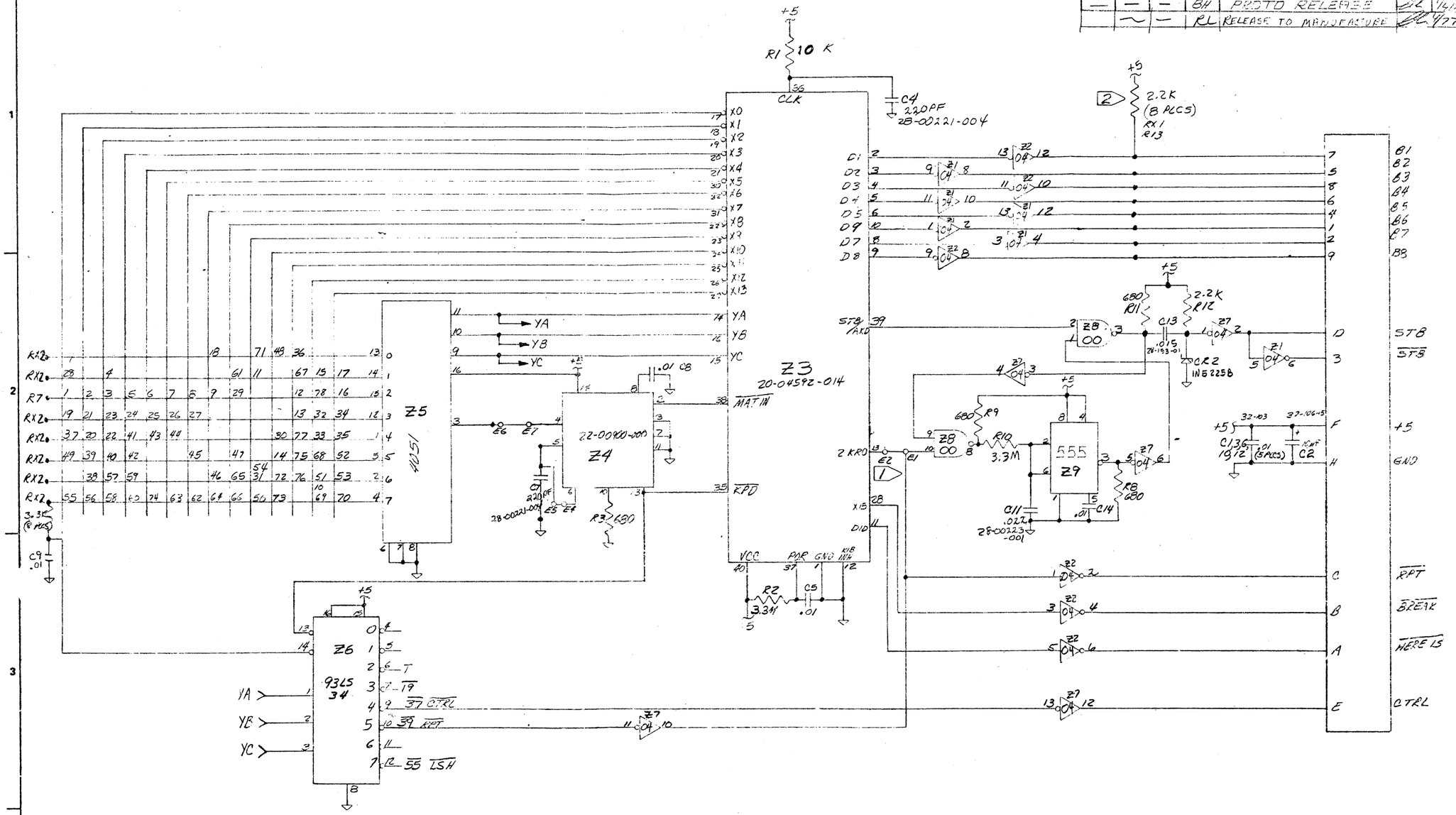

3. DO NOT INSTALL

2. NOT INSTALLED FOR -001

1. E1 JUMPERED TO E2 FOR 2KRO, E2 TO E3 FOR NKRO WITH 2KRO DURING REPEATING

NOTES:

NOTICE OF PROPRIETARY INFORMATION
INFORMATION CONTAINED HEREIN IS PROPRIETARY AND IS PROPERTY OF KEY TRONIC CORPORATION. WHERE FURNISHED WITH A PROPOSAL THE RECIPIENT SHALL USE IT SOLELY TO EVALUATE THE PROPOSAL. WHERE FURNISHED WITH A PROPOSAL THE RECIPIENT SHALL USE IT SOLELY FOR PURPOSES OF EVALUATION OR MAINTENANCE. WHERE FURNISHED WITH A SUPPLIER OF SHALL BE USED SOLELY FOR PERFORMANCE OF WORK CONTRACTED FOR BY THIS COMPANY.
THE INFORMATION SHALL NOT BE USED OR DISCLOSED TO THIRD PARTY FOR ANY OTHER PURPOSE WITHOUT THE WRITTEN PERMISSION OF KEY TRONIC CORPORATION.

MANUFACTURE PARTS AND/OR ASSY'S PER K.T.C. DOCUMENT:

UNLESS OTHERWISE NOTED ALL DIMENSIONS ARE IN INCHES
.XXX DIMENSION NOT TO SCALE

USED ON: KTC STD

RELEASED:
APP. [illegible] 1/4/77
CH.
DR. [illegible]

TOL. EXCEPT AS NOTED
HOLE DIA.
FRACT. ± 1/64"
XX ± .01"
XXX ± .005"
ANG. ± 1°

ITEM	PART NO.	DESCRIPTION	QTY.

SCALE ~

TITLE: SCHEMATIC

key tronic corporation
SPOKANE, WASH., U.S.A.

DWG. NO. 25-01563

SHEET 1 OF 1

REF.	REV	REC	ECO	BY	DESCRIPTION	APPROVED
	~	2792	~	RL	RELEASE TO PRODUCTION	[illegible] 4-77

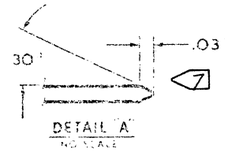

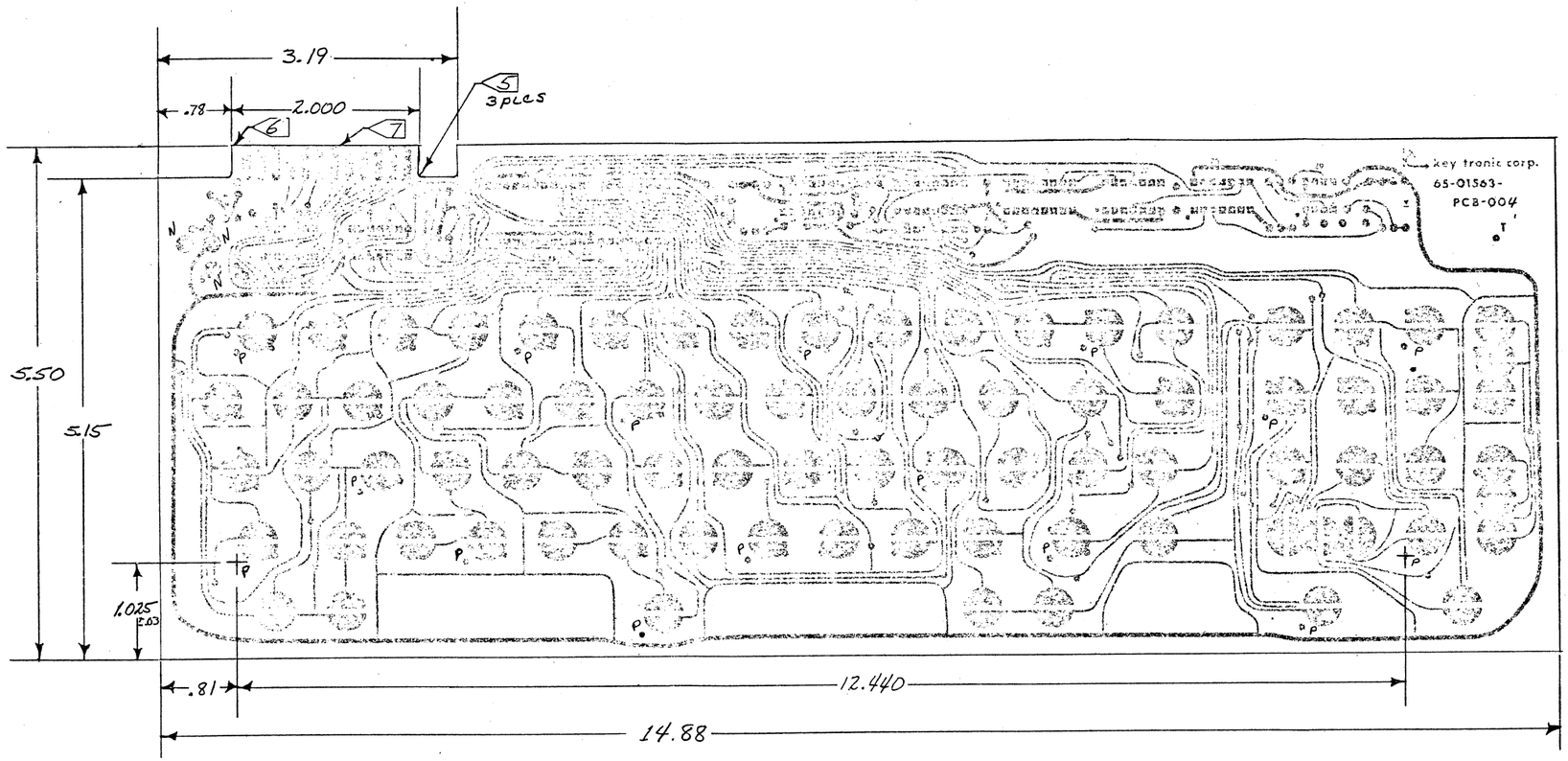

HOLE SIZE AFTER PLATING	CODE
.037	UN-MARKED 2
.042 ±.002	A
.052	B
.089	C
.128	D
.156	E
.187	F
.191 ±.002	G
.201	H
.234	J
.250	K
.131	L
.135	M
.125	N 2
.150	P
.150	R
TAG HOLE	T
	U
	V

-004 PCB

(COMPONENT SIDE)

7. EDGE CONNECTOR BEVEL REF. TO DETAIL "A"
6. PLATE CONNECTOR FINGERS WITH 30 MICROINCHES GOLD OVER 30 MICROINCHES STRESS-FREE NICKEL
5. .062 RADIUS MAXIMUM ALLOWED
4. SOLDER MASK USING 65-11563-002B ON CIRCUIT SIDE OF PCB
3. BREAK ALL SHARP EDGES
2. PLATE THROUGH ALL UNMARKED & N HOLES
1. USE 1 OZ DOUBLE-CLAD GID-FRC (1/16") THK.

NOTES:

MANUFACTURE PARTS OF THIS DRAWING PER ASSOCIATED DOCUMENT

MOTS

UNLESS OTHERWISE NOTED ALL DIMENSIONS ARE IN INCHES
XX DIMENSION NOT TO SCALE

MFG. DIV. KTC STANDARD

RELEASED 3-11-77
CH. 3/24/77
DR. RL 8/21/77

TOL EXCEPT AS NOTED
HOLE .003
.03
.010
ANG. ±1°

ITEM | PART NO | SCALE | TITLE

DESCRIPTION | QTY

KEYBOARD ASSY.
(PCB HOLE CODE)

key tronic corporation
SPOKANE, WASH., U.S.A.

DWG NO. 65-1563

SHEET 4 OF

E10, E20 KEYBOARD GENERATED CODES

Bits	Bits 7654												
3210	0000	0001	0010	0011	0100	0101	0110	0111	1000	1001	1010	1011	1110
0000	c@ (C,CS)	cP (C,CS)	SPACE	∅ ∅NP (NS,C) (ALL)	@	P	\	p	K1 (ALL)	K7 (ALL)		∅ (S, CS)	
0001	cA (C,CS)	cQ (C,CS)	!	1	A	Q	a	q	K2 (ALL)		INS CHAR (ALL)		
0010	cB (C,CS)	cR (C,CS)	"	2	B	R	b	r	K3 (ALL)		DEL CHAR (ALL)		
0011	cC (C,CS)	cS (C,CS)	#	3	C	S	c	s	K4 (ALL)	K16 (ALL)	INS LINE (ALL)		
0100	cD (C,CS)	cT (C,CS)	$	4	D	T	d	t	K5 (ALL)		DEL LINE (ALL)		
0101	cE (C,CS)	cU (C,CS)	%	5	E	U	e	u		K8 (ALL)			
0110	cF (C,CS)	cV (C,CS)	&	6	F	V	f	v	K6 (ALL)	K9 (ALL)			
0111	cG (C,CS)	cW (C,CS)		7	G	W	g	w					
1000	cH (C,CS)	cX (C,CS)	(	8	H	X	h	x	BSP ← (ALL)	K10 (ALL)	K93 (ALL)		
1001	cI (C,CS)	cY (C,CS)	)	9	I	Y	i	y		→ (ALL)			
1010	cJ LF (C,CS) (ALL)	cZ (C,CS)	* (S)	: (NS)	J	Z	j	z		HOME (ALL)	* (CS)	: (C)	
1011	cK (C,CS)	c[(C,CS)	+ (S)	; (NS)	K	[	k	{	K13 (ALL)	ESC (ALL)	+ (CS)	; (C)	
1100	cL (C,CS)	c (C,CS)	, (NS)	< (S)	L	\	l	|		↑ (ALL)	, (C)	< (CS)	
1101	cM CR (C,CS) (ALL)	c] (C,CS)	–	=	M	]	m	}	RETURN (ALL)	↓ (ALL)			
1110	cN (C,CS)	cd (C,CS)	. (NS)	> (S)	N	↑	n	~	K14 (NS, C)	K11 (ALL)	. (C)	> (CS)	K14 (S, CS)
1111	cO (C,CS)	c· (C,CS)	/ (NS)	? (S)	O	←	o	DEL	K15 (NS, C)	K12 (ALL)	/ (C)	? (CS)	K15 (S, CS)

ns = non shift
s = shift
c = control
cs = control shift
all = all of the above four modes
bit 7 = indicates a general code to be converted by the keyboard translator prom

EFF.	REV.	ECO	BY	DESCRIPTION	APP.	DATE
—	—	—	RJB	PROTO REL.		

DO NOT RELEASE AT THIS TIME

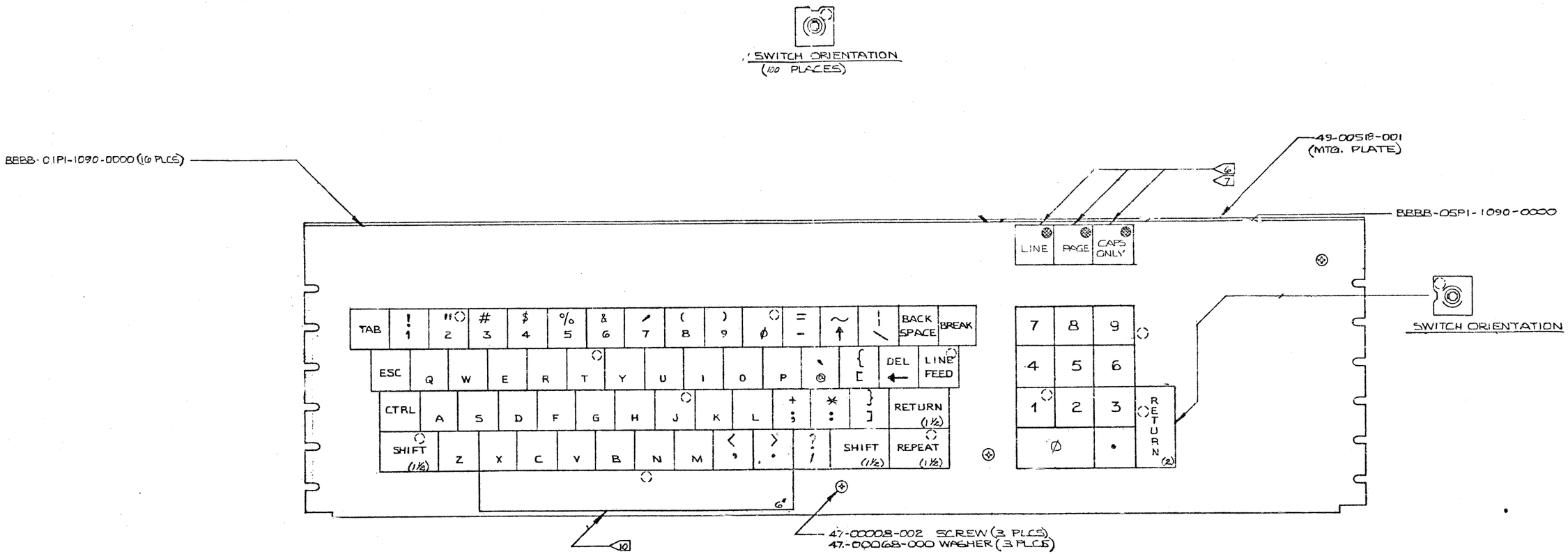

-003 MECH. ASSY & 66-01669-003 KEYTOP SET
(SEE SHEET 1 FOR ELECT. ASSY.)

10. 6 INCH SPACE BAR BBBB-12P1-1090-0000 WITH MECHANISM P/N'S 44-00076-000 (2 PL), 44-00074-000 (2 PL), & 44-00075-000
9. USE 47-00192-000 SCREW (16 PLACES) TO MOUNT PCB TO SWITCHES.
8. ALL SPRINGS ARE 45-00021-020 2 ØZ.
7. INSTALL 48-00227-002 LIGHT SHIELD BETWEEN SWITH & MOUNTING PLATE.
6. USE 61-04005-001 (6 PLACES) AS INDICATED.
5. ALL SWITCHES ARE 61-04001-001 EXCEPT AS NOTED IN 6.
4. ALL SWITCHES ARE CENTERED.
3. KEYBOARD IS A LOW PROFILE STEPPED.
2. APPLY APPROPRIATE DASH NO. AFTER KTC PART NUMBER.
1. APPLY DATE-SERIAL NO. PRESSURE ADHESIVE TAG TO COMPONENT SIDE OF PCB.

NOTES:

NOTICE OF PROPRIETARY INFORMATION

MANUFACTURE PARTS AND/OR ASSY'S PER K.T.C. DOCUMENT: M006 M007 M011

UNLESS OTHERWISE NOTED ALL DIMENSIONS ARE IN INCHES
XXX DIMENS ON NOT TO SCALE
USED ON INFOTON INC.
RELEASED
APP
CH
DR. RJL 4 2 77

TOL. EXCEPT AS NOTED
HOLE DIA.
FRACT. ± 1/64"
.XX ± .01"
.XXX ± .005"
ANG. ± 1°

ITEM	PART NO.	DESCRIPTION	QTY
SCALE		TITLE KEYBOARD ASSY (MECH. & KEYTOP)	

key tronic corporation
SPOKANE, WASH., U.S.A.

DWG NO. 65-01669
SHEET

EFF.	REV.	ECO	BY	DESCRIPTION	APP.	DATE
	~	~	[illegible]	PROTO RELEASE	[illegible]	[illegible]

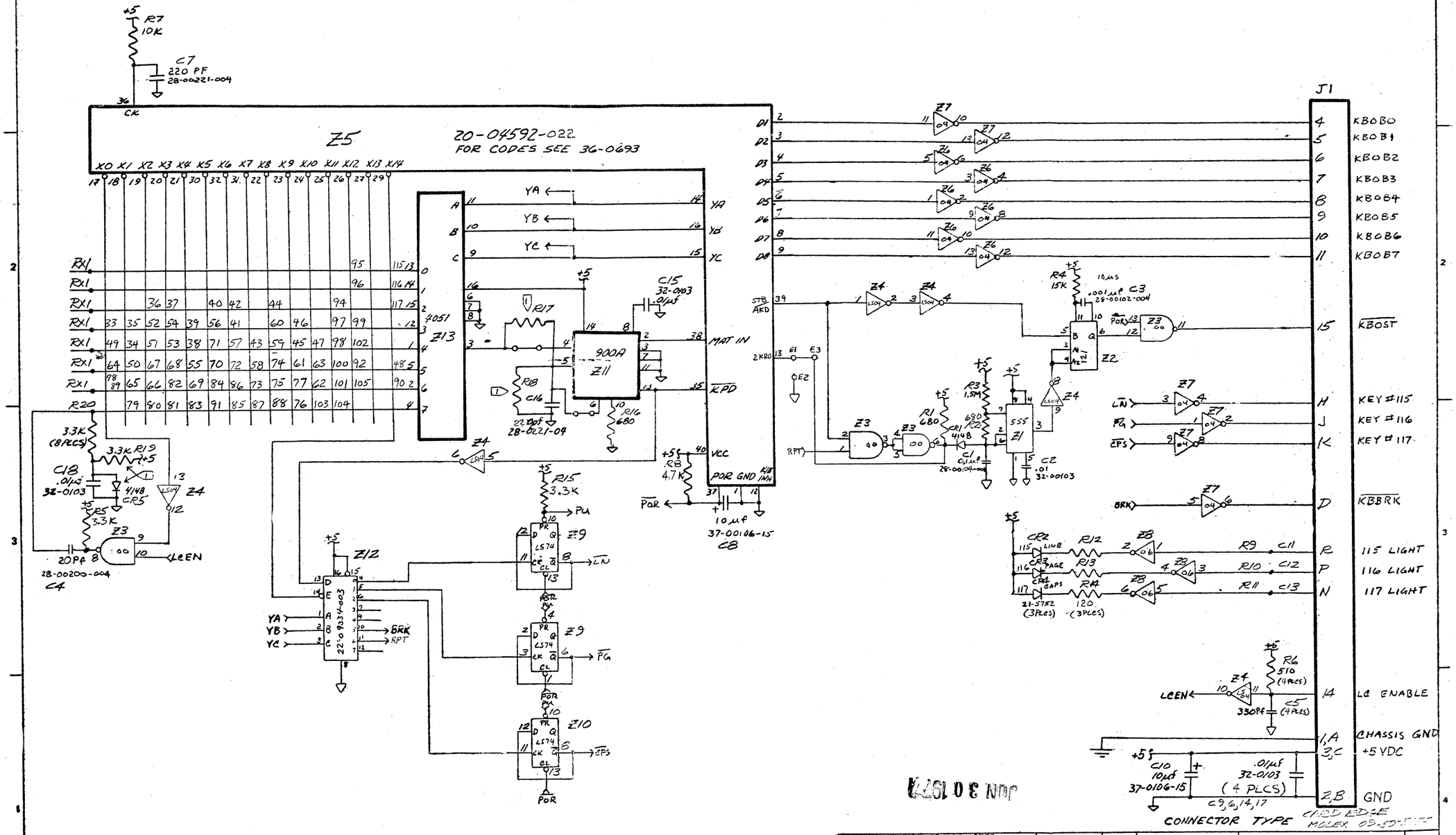

NOTICE OF PROPRIETARY INFORMATION

INFORMATION CONTAINED HEREIN IS PROPRIETARY AND IS PROPERTY OF KEY TRONIC CORPORATION. WHERE FURNISHED WITH A PROPOSAL, THE RECIPIENT SHALL USE IT SOLELY TO EVALUATE THE PROPOSAL. WHERE FURNISHED TO A CUSTOMER IT SHALL BE USED SOLELY FOR PURPOSES OF INSPECTION, INSTALLATION, OR MAINTENANCE. WHERE FURNISHED TO A SUPPLIER IT SHALL BE USED SOLELY IN THE PERFORMANCE OF WORK CONTRACTED FOR BY THIS COMPANY.

THE INFORMATION SHALL NOT BE USED OR DISCLOSED BY THE RECIPIENT FOR ANY OTHER PURPOSE WHATSOEVER.

MANUFACTURE PARTS AND/OR ASSY'S PER K.T.C. DOCUMENT: FTP 36-0790

UNLESS OTHERWISE NOTED ALL DIMENSIONS ARE IN INCHES

.XXX DIMENSION NOT TO SCALE

USED ON: INFOTON E10

RELEASED	
APP. [illegible]	7/10/77
CH. WJB	3/22/77
DR. [illegible]	3-15-77

TOL. EXCEPT AS NOTED

HOLE DIA.

FRACT. ± 1/64"
XX ± .01"
XXX ± .005"
ANG. ± 1°

ITEM	PART NO.	DESCRIPTION	QTY.

SCALE ~

TITLE: SCHEMATIC

key tronic corporation
SPOKANE, WASH., U.S.A.

DWG. NO. 35-01669

SHEET 1 OF 1

DO NOT INSTALL

EFF.	REV.	REC.	ECO	BY	DESCRIPTION	APP.	DATE
—	—	—	—	RJB	PROTO REL.		5-77

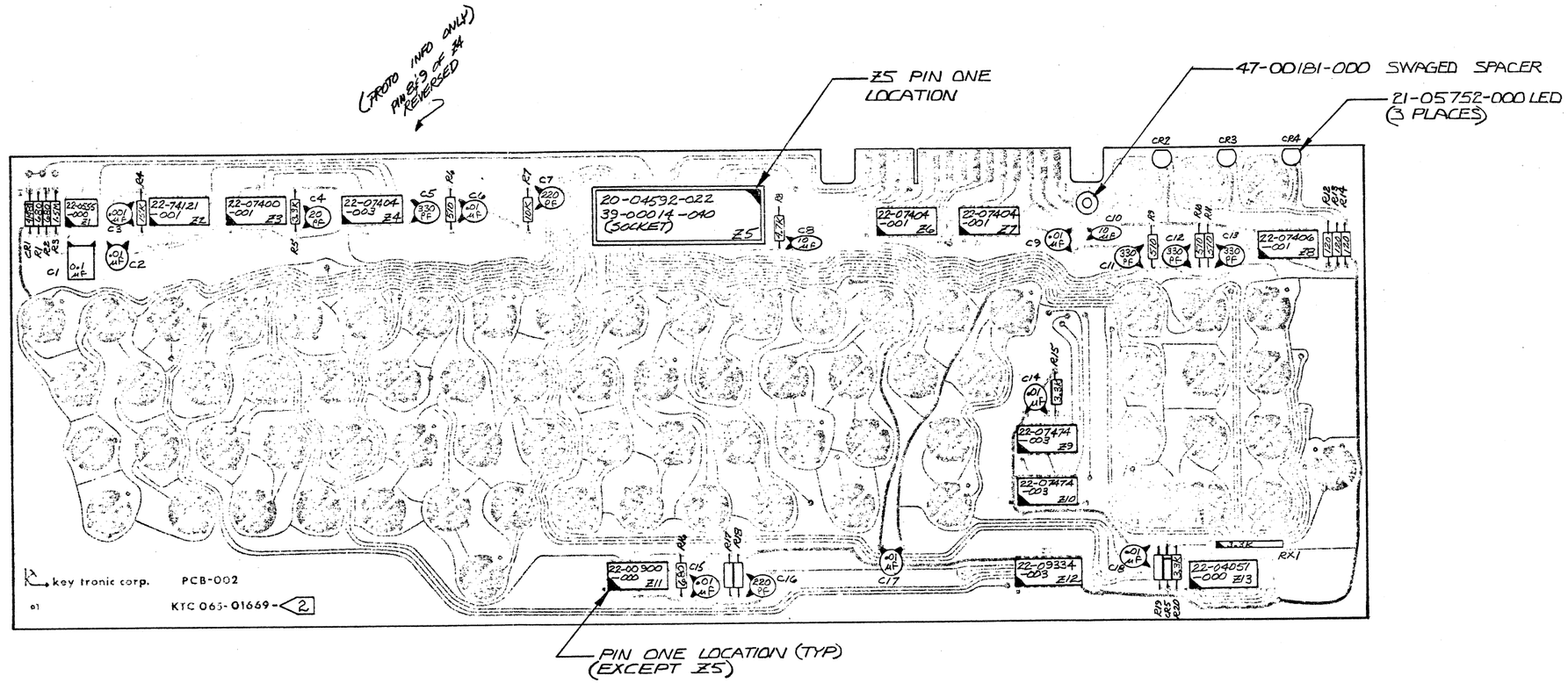

-001 ASSY

SEE SHEET 3 FOR MECH. & KEYTOPS

APPLY APPROPRIATE DASH NUMBER AFTER KTC PART NUMBER.

1. APPLY DATE-SERIAL NO. PRESSURE ADHESIVE TAG, TO COMPONENT SIDE OF PCB.

NOTES:

MANUFACTURE PARTS AND/OR ASSY'S PER K.T.C. DOCUMENT M006 M007	UNLESS OTHERWISE NOTED ALL DIMENSIONS ARE IN INCHES. DIMENSION NOT TO SCALE. DESIGN INFOTON INC. RELEASED	TOL. EXCEPT AS NOTED HOLE DIA. FRACT ± 1/64" XX ± .01" XXX ± .005 ANG ± 1°	ITEM PART NO. DESCRIPTION QTY. SCALE TITLE KEY BOARD ASSY. (ELECT. ASSY.)
	DR RJB 4-28-77		key tronic corporation SPOKANE, WASH., U.S.A. DWG NO 65-01669 SHEET 1 OF

EFF.	REV.	ECO	BY	DESCRIPTION	APP.	DATE
—	—	—	RJB	PROTO REL.		

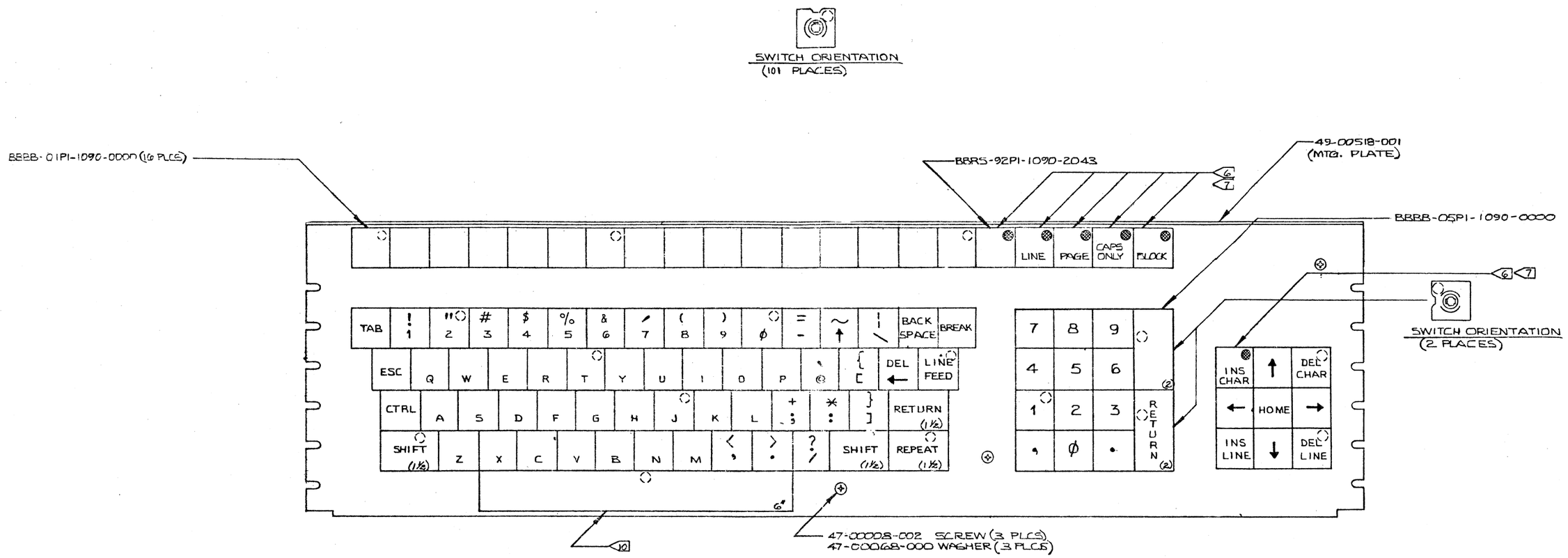

-001 MECH. ASSY & 66-01668-001 KEYTOP SET
(SEE SHEET 1 FOR ELECT. ASSY.)

10. 6 INCH SPACE BAR BBBB-12P1-1090-0000 WITH MECHANISM P/N'S 44-00076-000 (2 PL), 44-00074-000 (2 PL), & 44-00075-000
9. USE 47-00192-000 SCREW (16 PLACES) TO MOUNT PCB TO SWITCHES.
8. ALL SPRINGS ARE 45-00021-020 2 ØZ.
7. INSTALL 48-00227-002 LIGHT SHIELD BETWEEN SWITH & MOUNTING PLATE.
6. USE 61-04005-001 (6 PLACES) AS INDICATED.
5. ALL SWITCHES ARE 61-04001-001 EXCEPT AS NOTED IN 6.
4. ALL SWITCHES ARE CENTERED.
3. KEYBOARD IS A LOW PROFILE STEPPED.
2. APPLY APPROPRIATE DASH NO. AFTER KTC PART NUMBER.
1. APPLY DATE-SERIAL NO. PRESSURE ADHESIVE TAG TO COMPONENT SIDE OF PCB.

NOTES:

MANUFACTURE PARTS AND/OR ASSY'S PER K.T.C. DOCUMENT: M006 M007 M011

UNLESS OTHERWISE NOTED ALL DIMENSIONS ARE IN INCHES
.XXX DIMENSION NOT TO SCALE
USED ON INFOTON INC
RELEASED
APP
CH
DR. RJL

TOL. EXCEPT AS NOTED
HOLE DIA.
FRACT. ± 1/64"
.XX ± .01"
.XXX ± .005"
ANG. ± 1°

ITEM	PART NO.	DESCRIPTION	QTY
SCALE ~	TITLE KEYBOARD, ASSY (MECH. & KEYTOP)		

key tronic corporation
SPOKANE, WASH., U.S.A.
DWG NO. 66-01668
SHEET 3 OF

EFF.	REV.	ECO	BY	DESCRIPTION	APP.	DATE
	~	~	DEN	PROTO RELEASE		7/21/77

Z15. 20-04592-022
FOR CODES SEE 36-0693

X0 X1 X2 X3 X4 X5 X6 X7 X8 X9 X10 X11 X12 X13 X14
17 18 19 20 21 30 32 31 22 23 24 25 26 27 29

RX1											95	106	115	13	0
RX1		3	4	5	7	8	9		12			16	96	107	116	14	1
RX1	1	2	36	37	6	40	42	11	44	13	15	94	93	108	117	15	2
RX1	33	35	52	54	39	56	41	10	60	46	14	97	99	109	118	12	3
RX1	49	34	51	53	38	71	57	43	59	45	47	98	102	110	119	1	4
RX1	64	50	67	68	55	70	72	58	74	61	63	100	92	111	48	5	5
RX1	78/79	65	66	82	69	84	86	73	75	77	62	101	105	113	90	2	6
		79	80	81	83	91	85	87	88	76	103	104	112	114		4	7

+5 R21 10K
C16 220 PF 28-00221-004
36 CK

3.3K (8 PLCS)
3.3K R20 +5
C15 .01µf 32-0103
4/48 CR8
+5 R5 3.3K
C5 20PF 28-00200-004
Z3 00 9 10 → LCEN
Z4 LS04 13 12

Z7 4051
A 11 YA ← YA
B 10 YB ← YB
C 9 YC ← YC
16 6 7 8
3
R24
R25
C20 22 opf 28-0221-04
+5 C18 32-0103 .01µf
14 8 2 38 MAT IN
900A Z14
3 4 5 7 11 13 35 KPD
6 10 R23 680
+5 40 VCC
4.7K
POR GND 4/8 IMA
37 1 12
POR
10 µf 31-00106-15

Z13 22-09334-003
YA → KBL
YB → K119
YC → BRK
RPT

Z10 LS74 PR D Q CK CL
→ LN
Z10 → PG
Z11 → CFS
Z12 K119 → 119
Z12 KBL → BLK
POR

D1 D2 D3 D4 D5 D6 D7 D8
Z7 Z9 Z8 LS04

STB AKD 39
Z4 LS04
2KR 13 E1 E3 OE2
Z3 90
RPT
R1 680
R2 680
R3 1.5M
R4 .10 MS 15K
.001µf C4 28-00102-004
C3 .01µf 28-00104-004
Z1 555
C2 .01 32-00103
Z2 POR
Z3 00
Z4 LS04
15K RB
15K R10
15K R9
15K R8
15K R7
15K R11
21-57572 (6 PLCS)
120 (6 PLCS)
Z5 06
Z6 04
106 LINE
115 PAGE
116 CAPS
117 BLCK
118 119
BRK
R6 510 (7 PLCS)
C6 330PF (7 PLCS)
LCEN

C14 10µf 37-0106-15
.01µf 32-0103 (4 PLCS)
C13, 19, 1, 21

J1

4	KB0B0
5	KB0B1
6	KB0B2
7	KB0B3
8	KB0B4
9	KB0B5
10	KB0B6
11	KB0B7
15	KBOST
H	KEY # 115
J	KEY # 116
K	KEY # 117
E	KEY # 118
F	KEY # 119
D	KBBRK
L	106 LIGHT
R	115 LIGHT
P	116 LIGHT
N	117 LIGHT
M	118 LIGHT
S	119 LIGHT
14	LC ENABLE
1, A	CHASSIS GND
3, C	+5 VDC
2, B	GND

CONNECTOR TYPE CARD EDGE

① DO NOT INSTALL

NOTICE OF PROPRIETARY INFORMATION
INFORMATION CONTAINED HEREIN IS PROPRIETARY AND IS PROPERTY OF KEY TRONIC CORPORATION. WHERE FURNISHED WITH A PROPOSAL, THE RECIPIENT SHALL USE IT SOLELY TO EVALUATE THE PROPOSAL. WHERE FURNISHED TO A CUSTOMER IT SHALL BE USED SOLELY FOR PURPOSES OF INSPECTION, INSTALLATION, OR MAINTENANCE. WHERE FURNISHED TO A SUPPLIER IT SHALL BE USED SOLELY IN THE PERFORMANCE OF WORK CONTRACTED FOR BY THIS COMPANY.
THE INFORMATION SHALL NOT BE USED OR DISCLOSED BY THE RECIPIENT FOR ANY OTHER PURPOSE WHATSOEVER.

MANUFACTURE PARTS AND/OR ASSY'S PER K.T.C. DOCUMENT: FTP 36-0770

UNLESS OTHERWISE NOTED ALL DIMENSIONS ARE IN INCHES
XXX DIMENSION NOT TO SCALE
TOL. EXCEPT AS NOTED
HOLE DIA.
FRACT. ± 1/64"
XX ± .01"
XXX ± .005"
ANG. ± 1°

USED ON	RELEASED	
INFOTON E20	ARD	7/18/77
	CH. WJS	8/22/77
	DR. DEN	3-15-77

ITEM	PART NO.	DESCRIPTION	QTY.
SCALE ~	TITLE SCHEMATIC		

key tronic corporation
SPOKANE, WASH., U.S.A.

DWG. NO. 35-01668
SHEET 1 OF 1

EFF.	REV.	REC.	ECO	BY	DESCRIPTION	APP	DATE
—	—	—	—	RJB	PROTO REL.		4-25-77

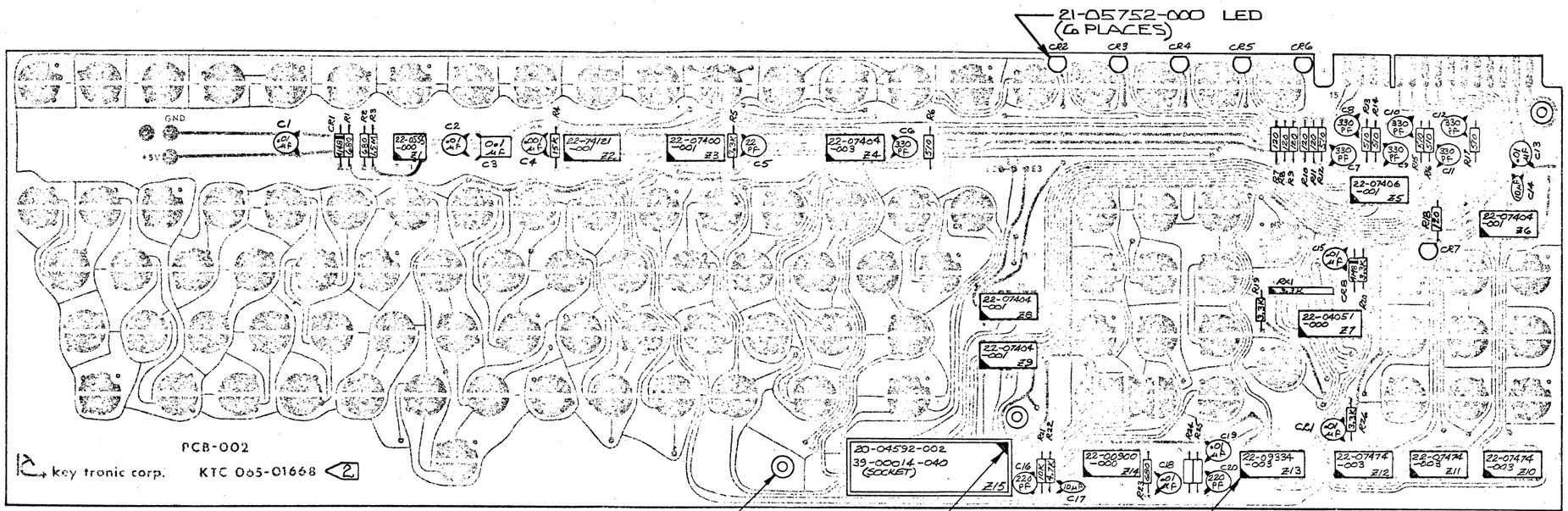

-001 ASSY

SEE SHEET 3 FOR MECH. & KEYTOPS

APPLY APPROPRIATE DASH NUMBER AFTER KTC PART NUMBER.

1. APPLY DATE-SERIAL NO. PRESSURE ADHESIVE TAG, TO COMPONENT SIDE OF PCB.

NOTES:

MANUFACTURE PARTS AND/OR ASS'S PER K.T.C. DOCUMENT M006 M007

UNLESS OTHERWISE NOTED ALL DIMENSIONS ARE IN INCHES
XXX DIMENSION NOT TO SCALE
TOL EXCEPT AS NOTED
HOLE DIA
FRACT ± 1/64
XX ± .03
XXX ± .005
ANG ± 1°

USED ON INFOTON INC.

RELEASED
CK Q 4/25/77
DR RJB 4-22-77

ITEM	PART NO	DESCRIPTION	QTY

SCALE

TITLE KEY BOARD ASSY. (ELECT. ASSY.)

key tronic corporation
SPOKANE, WASH. U.S.A.

DWG NO 65-01668

SHEET 1 OF

REV.	ECO	BY	DESCRIPTION	APP	DATE
~	~	SK	PROTO RELEASE	[illegible]	[illegible]
~	~	SK	RELEASE TO PROD.	[illegible]	[illegible]
3-5-6	A	1786 1844	G.B	REV TO -002D PCB, REMOVE [illegible] Add R35, CHG R1, Add -003 ASSY (REC [illegible])	[illegible]	[illegible]
3/11/6	B	~	A.C.	ADD -004 ASSY (REC 1579) CHG FROM 1 OF 6 TO 1 OF 7	[illegible]	3/11/6
4-20-6	C	~	MS	REVISED NOTE 3	[illegible]	4-20-6
11/4/76	D	2049	MS	CHG 3900 GEODBACK RESISTORS TO 56K	[illegible]	5-13-6
6-1-6	E	2058	MS	ADD C3 (100 PF)	[illegible]	5-20-6
12-13-76	F	2295	WM	CHG. PER. ECO 2295	[illegible]	7-7-76

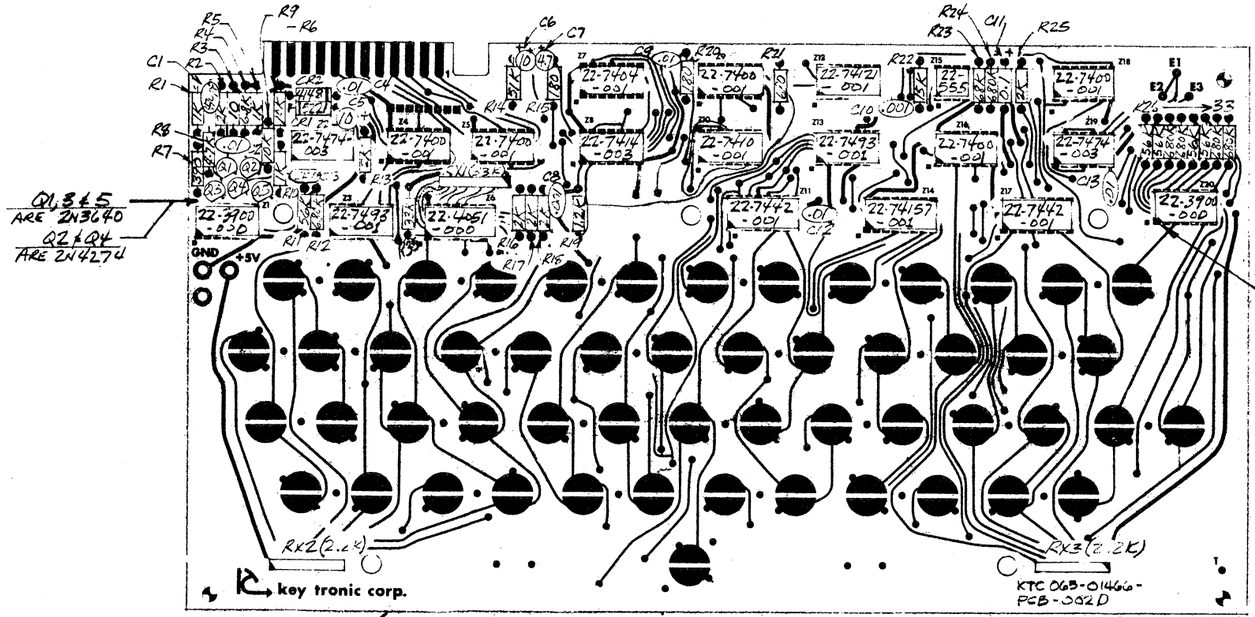

-001, -003 & -004 ASSY

SEE SHEET 3 FOR MECH. ASSY &
SHEET 4 FOR -001 KEYTOP SET
SHEET 5 FOR -003 KEYTOP SET
SHEET 7 FOR -004 KEYTOP SET

2. RUBBER STAMP APPROPRIATE DASH NO. AFTER KTC PART NUMBER [BLACK]
1. APPLY DATE-SERIAL NO. PRESURE ADHESIVE TAG, TO COMPONENT SIDE OF PCB

NOTES

NOTICE OF CONFIDENTIAL INFORMATION
INFORMATION CONTAINED HEREIN IS CONFIDENTIAL AND IS PROPERTY OF KEY TRONIC CORPORATION. WHERE FURNISHED WITH A PROPOSAL THE RECIPIENT SHALL USE IT SOLELY TO EVALUATE THE PROPOSAL. WHERE FURNISHED TO A CUSTOMER IT SHALL BE USED SOLELY FOR PURPOSES OF INSPECTION, INSTALLATION, OR MAINTENANCE. WHERE FURNISHED TO A SUPPLIER IT SHALL BE USED SOLELY IN THE PERFORMANCE OF WORK CONTRACTED FOR BY THIS COMPANY.
THE INFORMATION SHALL NOT BE USED OR DISCLOSED BY THE RECIPIENT FOR ANY OTHER PURPOSE WHATSOEVER.

MANUFACTURE PARTS AND/OR ASSY'S PER K.T.C. DOCUMENT: M006 M007

UNLESS OTHERWISE NOTED ALL DIMENSIONS ARE IN INCHES
XXX DIMENSION NOT TO SCALE
USED ON: KTC STD ASR-33
RELEASED [illegible]
APP. [illegible]
CH. GB [illegible]
DR. SK [illegible]

TOL. EXCEPT AS NOTED
HOLE DIA:
FRACT. ± 1/64
XX ± .01
XXX ± .005
ANG. ± [illegible]

ITEM	PART NO.	DESCRIPTION	QTY
SCALE ~		TITLE KEYBOARD ASSY (ELECTRICAL)	

key tronic corporation
SPOKANE, WASH. U.S.A.
DWG. NO. 65-01466
SHEET 1 OF 1

TROUBLE SHOOTING KTC DETECTOR CIRCUIT

USED ON

65-1466

REV.	DESCRIPTION	APP.	DATE

SCALE	TITLE TROUBLE SHOOTING KTC DETECTOR CIRCUIT		
key tronic corporation SPOKANE, WASH. U.S.A.		DR. WJB	DATE 10/19/6
		APP.	DATE
		DWG. NO. 36-0729	
		SHEET	

Requires 65-1466 Sheet 1, 35-1466 Sheet1, and Oscilloscope.

A. SET-UP

1. Connect external trigger of the scope to the slowest bit on the counter (Z13-8). Adjust the sweep rate to one period of this signal (equivalent to one keyboard scan). When signal is located use intensify mode for viewing short pulses.

2. Ground both vertical inputs on the scope and set both base lines to the same reference levels. Set V/Cm to 1V/Cm.

3. Unground the inputs, you are ready to look at the signals on the keyboard. Ref: Connect probe ground leads to ground near the point being measured.

B. PROCEDURE

1. In order to verify that the fault is in the detector, connect probe "A" to the collector of Q2 (2N4274).

2. Repeatedly depress a key and ascertain if a negative pulse of approximately 1000 nsec is present (coinciding with key depression).

3. If negative pulses were observed, the problem does not lie in the detector and the validation and strobe processing logic should be checked.

4. If a negative pulse was not found at Q2, check the detector.

5. Before beginning to trouble shoot the detector, verify that Z11 (7442) Z17 (7442), and Z6 (4051) are working by checking inputs.

C. COMMON CHECKOUT

NOTE: After any changes to the circuit check the keyboard to ascertain whether the malfunction has been repaired.

1. Check to voltage level at the cathode of CR1 (IN5221B). It should be 2.1V. If the proper level is not present replace CR1. Verify that this level is also present at the base of Q4, if not, check trace for continuity.

2. Check the base of Q1 (2N3640) to verify the presence of a level of approximately 3.5V. If this level is not present verify continuity of the following circuit.

REV.	DESCRIPTION	APP.	DATE

SCALE	TITLE TROUBLE SHOOTING KTC DETECTOR CIRCUIT		
key tronic corporation SPOKANE, WASH. U.S.A.		DR.	DATE
		APP.	DATE
		DWG. NO. 36-0729	

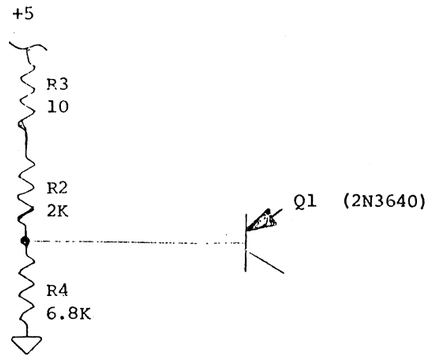

3. Verify that when a key is repeatedly depressed a corresponding negative pulse occurs at the base of Q1.

If no pulse occurs check R5 (1K) and CR2 (IN4148).

D. SIGNAL TRACING

1. Connect probe "A" to the base of Q3 (2N3640) and verify a positive pulse of approximately 500 nsec is present when a key is depressed.

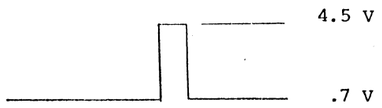

NOTE: Probe ground must be used throughout this section.

Replace Q4 (2N4274, Q5 (2N3640), R8 (4.7K), and C3 (220pf) if the pulse is not present.

2. Connect probe "A" to the emitter of Q3 and verify the presence of a 1000 nsec positive pulse when depressing a key.

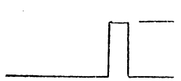

If the pulse is not present replace Q3 (2N3640) and R1 (1K).

REV.	DESCRIPTION	APP.	DATE

SCALE	TITLE TROUBLE SHOOTING KTC DETECTOR CIRCUIT	
key tronic corporation SPOKANE, WASH. U.S.A.	DR.	DATE
	APP.	DATE
	DWG. NO. 36-0729	
	SHEET 3	

3. Connect probe "A" to the collector of Q1 (2N3640) and verify the presence of a 1000 ns positive pulse when depressing a key.

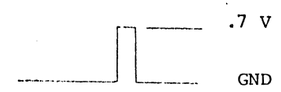

If the pulse is not present replace Q1 and R9 (10K).

4. Connect probe "A" to the collector of Q2 (2N4274) and verify the presence of a 1000 nsec negative pulse when depressing a key.

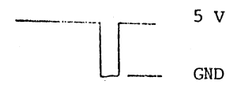

If the pulse is not present replace Q2 and R6 (10K).

5. This completes the checkout of the detector.

REV.	DESCRIPTION	APP.	DATE

SCALE	TITLE TROUBLE SHOOTING KTC DETECTOR CIRCUIT	
key tronic corporation SPOKANE, WASH. U.S.A.	DR.	DATE
	APP.	DATE
	DWG. NO. 36-0729	
	SHEET	

EFF.	REV.	ECO	BY	DESCRIPTION	APP	DATE
	~	~	QRD	PROTO RELEASE	[illegible]	11/81
	~	~	S.K.	RELEASE TO PROD.	[illegible]	[illegible]
2/1/86	A	1786	G.B.	REVISE ELECT. PER REC 1526	[illegible]	2/19/86

MOSC

Z10 10 — Z9 00 — Z8 LS14 — ~1.8 μs

R19 1.2K — C8 .001μf 28-0102-04

Z10 10 — B6, B7

Z19 — R12 680K — Z7 — Z1 3900 — R11 56K — MOSC, CTRL — PU (R22S) — E1, E2, E3

Z9 00 — Z8 — B7

Z7 — Z4 7PLCS TYP — Z5 — B1, B2, B3, B4, B5, B6, B7

R15 180 — C7 4.7μf 37-0475-35 — R20 180 — C9 .01μf 32-0103

Z12 121 — R22 15K — C10 .001μf 28-0102-04 — C6 10μf 37-0106-15 — C5 10μf 37-0106-15 — 10±3 μs

R14 51K — +5

Z2 LS74 — PU (R13)

R21 680 — R23 68K — R24 680K — Z15 555 — C11 0.1μf 28-0104-03

R29 680K — Z20 3900 — Z8 LS14 — R26 56K — MOSC

R28 680K — R27 56K — R33 680K — R30 56K — Z20 3900 — Z8 LS14 — Z7 74

Z3 93 — 2K 8PLCS R16, R17, R18 — +5

B1, B2, B3

Z17 42 — Z11 42 — Z14 157 — SH

33K 6PLCS (RX1) — +5

Z16 00 — Z6 4051

R13, 25 2K — +5V — P1

Z19 LS74 — PU (R25) — SH

R32 680K — Z20 3900 — R31 56K — MOSC

E6, E5, B4

E, HYT

2K 14PLCS (RX2, RX3) — +5

E CTRL
7 B1
5 B2
8 B3
6 B4
4 B5
1 B6
2 B7
3 STB
D STB
F +5
H GND
A HERE IS
B BREAK
C RPT

3 PADS FOR PULLUP RESISTORS ONLY. NO RESISTORS INSTALLED.

2 TO MAKE CTRL INSTEAD OF CTRL, CUT TRACE FROM E1 to E2 AND INSTALL JUMPER FROM E1 to E3.

1 STANDARD DETECTION CIRCUIT.

NOTICE OF CONFIDENTIAL INFORMATION
INFORMATION CONTAINED HEREIN IS CONFIDENTIAL AND IS PROPERTY OF KEY TRONIC CORPORATION. WHERE FURNISHED WITH A PROPOSAL THE PROPOSAL SHALL BE FURNISHED TO CUSTOMER IT SHALL BE USED SOLELY FOR PURPOSES OF INSPECTION, INSTALLATION, OR MAINTENANCE WHERE FURNISHED TO A SUPPLIER IT SHALL BE USED SOLELY IN THE PERFORMANCE OF WORK CONTRACTED FOR BY THIS COMPANY.
THE INFORMATION SHALL NOT BE USED OR DISCLOSED BY THE RECIPIENT FOR ANY OTHER PURPOSE WHATSOEVER

MANUFACTURE PARTS AND/OR ASSY'S PER K.T.C. DOCUMENT: E.T.P. 36-0376

UNLESS OTHERWISE NOTED ALL DIMENSIONS ARE IN INCHES
XXX DIMENSION NOT TO SCALE
USED ON: KTC STANDARD; ASR 33
RELEASED [illegible]
APP. [illegible]
CH. [illegible]
DR. QRD [illegible]

TOL. EXCEPT AS NOTED
HOLE DIA.
FRACT. ± 1/64"
XX ± .01"
XXX ± .005"
ANG. ± 1°

ITEM	PART NO.	DESCRIPTION	QTY.

SCALE ~ — TITLE: SCHEMATIC

key tronic corporation
SPOKANE, WASH., U.S.A.

DWG. NO. 35-1466
SHEET 1 OF 2 — C

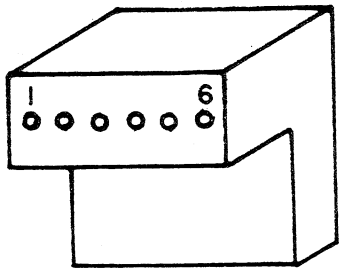

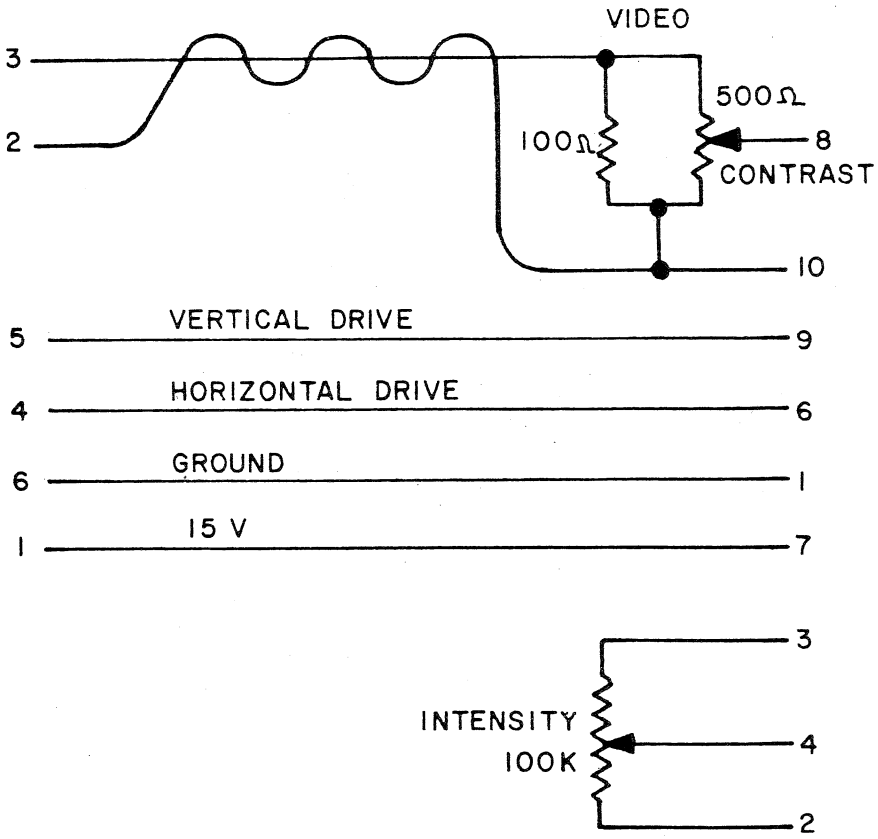

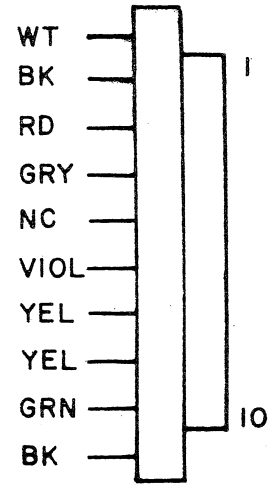

TV Cable Assembly

INFOTON • SECOND AVENUE BURLINGTON MASSACHUSETTS 01803 • AREA CODE 617 272-6660

256 BIT PROM P.N. 02484-027

MNEMONIC	CLRT	LA4	LA3	LA2	LA1					VMA9	VMA8	IMA7	IMA6	IMA5	IMA4	
PIN	14	13	12	11	10	15		9	7	6	5	4	3	2	1	
INPUT							OUTPUT									Screen
BIT	A4	A3	A2	A1	A0	ENB	Word	B7	B6	B5	B4	B3	B2	B1	B0	Line
	0	0	0	0	0	0	0			0	0	0	0	0	0	16, 17
	0	0	0	0	1	0	1			0	0	0	1	0	1	18, 19
	0	0	0	1	0	0	2			0	0	1	0	1	0	20, 21
	0	0	0	1	1	0	3			0	1	0	0	0	0	22, 23
	0	0	1	0	0	0	4			0	1	0	1	0	1	0, 1
	0	0	1	0	1	0	5			0	1	1	0	1	0	2, 3
	0	0	1	1	0	0	6			1	0	0	0	0	0	4, 5
	0	0	1	1	1	0	7			1	0	0	1	0	1	6, 7
	0	1	0	0	0	0	8			1	0	1	0	1	0	8, 9
	0	1	0	0	1	0	9			1	1	0	0	0	0	10, 11
	0	1	0	1	0	0	10			1	1	0	1	0	1	12, 13
	0	1	0	1	1	0	11			1	1	1	0	1	0	14, 15
	0	1	1	0	0	0	12			0	0	0	0	0	0	
	0	1	1	0	1	0	13			0	0	0	0	0	0	
	0	1	1	1	0	0	14			0	0	0	0	0	0	
	0	1	1	1	1	0	15			0	0	0	0	0	0	
	1	0	0	0	0	0	16			0	0	0	0	0	0	
	1	0	0	0	1	0	17			0	1	0	0	0	0	
	1	0	0	1	0	0	18			1	0	0	0	0	0	
	1	0	0	1	1	0	19			1	1	0	0	0	0	
	1	0	1	0	0	0	20			0	0	0	0	0	0	
	1	0	1	0	1	0	21			0	1	0	0	0	0	
	1	0	1	1	0	0	22			1	0	0	0	0	0	
	1	0	1	1	1	0	23			1	1	0	0	0	0	
	1	1	0	0	0	0	24			0	0	0	0	0	0	
	1	1	0	0	1	0	25			0	1	0	0	0	0	
	1	1	0	1	0	0	26			1	0	0	0	0	0	
	1	1	0	1	1	0	27			1	1	0	0	0	0	
	1	1	1	0	0	0	28			0	0	0	0	0	0	
	1	1	1	0	1	0	29			0	1	0	0	0	0	
	1	1	1	1	0	0	30			1	0	0	0	0	0	
	1	1	1	1	1	0	31			1	1	0	0	0	0	
	X	X	X	X	X	1	ALL									

I200 Line Address Translator
I200 Location B1

256 BIT PROM P.N. 02484-028

	MNEMONIC	$\overline{JP4}$	$\overline{RCVB6}$	$\overline{RCVB5}$	$\overline{RCVB4}$	$\overline{RCVB3}$				$\overline{ILC}$	$\overline{ILL}$			TB6	TB5	TB4	TB3
PIN		14	13	12	11	10	15			9	7	6	5	4	3	2	1
	INPUT								OUTPUT								
BIT		A4	A3	A2	A1	A0	ENB	WORD		B7	B6	B5	B4	B3	B2	B1	B0
		0	0	0	0	0	0	0		1	0			0	0	1	1
		0	0	0	0	1	0	1		1	1			0	0	1	0
		0	0	0	1	0	0	2		1	1			0	0	0	1
		0	0	0	1	1	0	3		1	1			0	0	0	0
		0	0	1	0	0	0	4		0	0			1	0	1	1
		0	0	1	0	1	0	5		0	1			1	0	1	0
		0	0	1	1	0	0	6		1	1			1	0	0	1
		0	0	1	1	1	0	7		1	1			1	0	0	0
		0	1	0	0	0	0	8		1	0			0	1	1	1
		0	1	0	0	1	0	9		1	1			0	1	1	0
		0	1	0	1	0	0	10		1	1			0	1	0	1
		0	1	0	1	1	0	11		1	1			0	1	0	0
		0	1	1	0	0	0	12		1	0			0	0	1	1
		0	1	1	0	1	0	13		1	1			0	0	1	0
		0	1	1	1	0	0	14		1	1			0	0	0	1
		0	1	1	1	1	0	15		1	1			0	0	0	0
		1	0	0	0	0	0	16		0	0			1	0	1	1
		1	0	0	0	1	0	17		0	1			1	0	1	0
		1	0	0	1	0	0	18		1	1			1	0	0	1
		1	0	0	1	1	0	19		1	1			1	0	0	0
		1	0	1	0	0	0	20		1	0			0	1	1	1
		1	0	1	0	1	0	21		1	1			0	1	1	0
		1	0	1	1	0	0	22		1	1			0	1	0	1
		1	0	1	1	1	0	23		1	1			0	1	0	0
		1	1	0	0	0	0	24		1	0			0	0	1	1
		1	1	0	0	1	0	25		1	1			0	0	1	0
		1	1	0	1	0	0	26		1	1			0	0	0	1
		1	1	0	1	1	0	27		1	1			0	0	0	0
		1	1	1	0	0	0	28		0	0			0	0	1	1
		1	1	1	0	1	0	29		0	0			0	0	1	0
		1	1	1	1	0	0	30		0	0			0	0	0	1
		1	1	1	1	1	0	31		0	0			0	0	0	0
		X	X	X	X	X	1	ALL									

I200 Cursor Address Translator
I200 Location L3

256 BIT PROM P.N. 02484-029

MNEMONIC	VCC5	VCC4	VCC3	VCC2	VCC1	$\overline{VCC6}$					$\overline{HSYNC}$	$\overline{HDRIVE}$	$\overline{HBLANK}$	$\overline{VC79}$	$\overline{EOL}$	
PIN	14	13	12	11	10	15		9	7	6	5	4	3	2	1	
INPUT							OUTPUT									
BIT	A4	A3	A2	A1	A0	ENB	Word	B7	B6	B5	B4	B3	B2	B1	B0	Character
	0	0	0	0	0	0	0				1	1	1	1	1	64
	0	0	0	0	1	0	1				1	1	1	1	1	66
	0	0	0	1	0	0	2				1	1	1	1	1	68
	0	0	0	1	1	0	3				1	1	1	1	1	70
	0	0	1	0	0	0	4				1	1	1	1	1	72
	0	0	1	0	1	0	5				1	1	1	1	1	74
	0	0	1	1	0	0	6				1	1	1	1	1	76
	0	0	1	1	1	0	7				1	1	1	0	1	78
	0	1	0	0	0	0	8				1	1	0	1	1	80
	0	1	0	0	1	0	9				1	1	0	1	1	82
	0	1	0	1	0	0	10				1	1	0	1	1	84
	0	1	0	1	1	0	11				1	0	0	1	1	86
	0	1	1	0	0	0	12				1	0	0	1	1	88
	0	1	1	0	1	0	13				0	0	0	1	1	90
	0	1	1	1	0	0	14				0	0	0	1	1	92
	0	1	1	1	1	0	15				0	0	0	1	1	94
	1	0	0	0	0	0	16				0	0	0	1	1	96
	1	0	0	0	1	0	17				0	0	0	1	1	98
	1	0	0	1	0	0	18				1	0	0	1	1	100
	1	0	0	1	1	0	19				1	0	0	1	1	102
	1	0	1	0	0	0	20				1	0	0	1	1	104
	1	0	1	0	1	0	21				1	0	0	1	1	106
	1	0	1	1	0	0	22				1	0	0	1	0	108
	1	0	1	1	1	0	23				1	0	0	1	0	
	1	1	0	0	0	0	24				1	0	0	1	0	
	1	1	0	0	1	0	25				1	0	0	1	0	
	1	1	0	1	0	0	26				1	0	0	1	0	
	1	1	0	1	1	0	27				1	0	0	1	0	
	1	1	1	0	0	0	28				1	0	0	1	0	
	1	1	1	0	1	0	29				1	0	0	1	0	
	1	1	1	1	0	0	30				1	0	0	1	0	
	1	1	1	1	1	0	31									
	X	X	X	X	X	1	ALL									

I200 Video Character Counter
I200 Location F9

256 BIT PROM P.N. 02484-030

	MNEMONIC	ERLC	SCLK3	SCLK2	SCLK1	SCLK0				ELC							
PIN		14	13	12	11	10	15			9	7	6	5	4	3	2	1
	INPUT								OUTPUT								
BIT		A4	A3	A2	A1	A0	ENB	WORD		B7	B6	B5	B4	B3	B2	B1	B0
		0	0	0	0	0	0	0		0			0	0	0	0	1
		0	0	0	0	1	0	1		0			0	0	0	1	0
		0	0	0	1	0	0	2		0			0	0	0	1	1
		0	0	0	1	1	0	3		0			0	0	1	0	0
		0	0	1	0	0	0	4		0			0	0	1	0	1
		0	0	1	0	1	0	5		0			0	0	1	1	0
		0	0	1	1	0	0	6		0			0	0	1	1	1
		0	0	1	1	1	0	7		0			1	0	0	0	0
		0	1	0	0	0	0	8		1			0	1	0	0	1
		0	1	0	0	1	0	9		0			0	0	0	0	0
		0	1	0	1	0	0	10		0			0	0	0	0	0
		0	1	0	1	1	0	11		0			0	0	0	0	0
		0	1	1	0	0	0	12		0			0	0	0	0	0
		0	1	1	0	1	0	13		0			0	0	0	0	0
		0	1	1	1	0	0	14		0			0	0	0	0	0
		0	1	1	1	1	0	15		0			0	0	0	0	0
		1	0	0	0	0	0	16		0			0	0	0	0	1
		1	0	0	0	1	0	17		0			0	0	0	1	0
		1	0	0	1	0	0	18		0			0	0	0	1	1
		1	0	0	1	1	0	19		0			0	0	1	0	0
		1	0	1	0	0	0	20		0			0	0	1	0	1
		1	0	1	0	1	0	21		0			0	0	1	1	0
		1	0	1	1	0	0	22		0			0	0	1	1	1
		1	0	1	1	1	0	23		0			0	1	0	0	0
		1	1	0	0	0	0	24		0			0	1	0	0	1
		1	1	0	0	1	0	25		0			0	1	0	1	0
		1	1	0	1	0	0	26		0			0	1	0	1	1
		1	1	0	1	1	0	27		0			0	1	1	0	0
		1	1	1	0	0	0	28		0			0	1	1	0	0
		1	1	1	0	1	0	29		0			0	1	1	1	0
		1	1	1	1	0	0	30		1			0	1	1	1	1
		1	1	1	1	1	0	31		0			0	0	0	0	0
		X	X	X	X	X	1	ALL									

I200 Video Slice Counter
I200 Location C9

256 BIT PROM P.N. 02484-031

	MNEMONIC								ERCL	$\overline{\text{VBLANK}}$	$\overline{\text{VDRIVE}}$	$\overline{\text{NL4}}$	$\overline{\text{NL3}}$	$\overline{\text{NL2}}$	$\overline{\text{NL1}}$	$\overline{\text{NL0}}$
PIN		14	13	12	11	10	15		9	7	6	5	4	3	2	1
	INPUT							OUTPUT								
BIT		A4	A3	A2	A1	A0	ENB	WORD	B7	B6	B5	B4	B3	B2	B1	B0
		0	0	0	0	0	0	0	0	1	1	1	1	1	1	0
		0	0	0	0	1	0	1	0	1	1	1	1	1	0	1
		0	0	0	1	0	0	2	0	1	1	1	1	1	0	0
		0	0	0	1	1	0	3	0	1	1	1	1	0	1	1
		0	0	1	0	0	0	4	0	1	1	1	1	0	1	0
		0	0	1	0	1	0	5	0	1	1	1	1	0	0	1
		0	0	1	1	0	0	6	0	1	1	1	1	0	0	0
		0	0	1	1	1	0	7	0	1	1	1	0	1	1	1
		0	1	0	0	0	0	8	0	1	1	1	0	1	1	0
		0	1	0	0	1	0	9	0	1	1	1	0	1	0	1
		0	1	0	1	0	0	10	0	1	1	1	0	1	0	0
		0	1	0	1	1	0	11	0	1	1	1	0	0	1	1
		0	1	1	0	0	0	12	0	1	1	1	0	0	1	0
		0	1	1	0	1	0	13	0	1	1	1	0	0	0	1
		0	1	1	1	0	0	14	0	1	1	1	0	0	0	0
		0	1	1	1	1	0	15	0	1	1	0	1	1	1	1
		1	0	0	0	0	0	16	0	1	1	0	1	1	1	0
		1	0	0	0	1	0	17	0	1	1	0	1	1	0	1
		1	0	0	1	0	0	18	0	1	1	0	1	1	0	0
		1	0	0	1	1	0	19	0	1	1	0	1	0	1	1
		1	0	1	0	0	0	20	0	1	1	0	1	0	1	0
		1	0	1	0	1	0	21	0	1	1	0	1	0	0	1
		1	0	1	1	0	0	22	0	1	1	0	1	0	0	0
		1	0	1	1	1	0	23	0	0	1	0	0	1	1	1
		1	1	0	0	0	0	24	0	0	1	0	0	1	1	1
		1	1	0	0	1	0	25	0	0	1	0	0	1	1	1
		1	1	0	1	0	0	26	0	0	1	0	0	1	1	1
		1	1	0	1	1	0	27	0	0	1	0	0	1	1	1
		1	1	1	0	0	0	28	0	0	1	0	0	1	1	1
		1	1	1	0	1	0	29	0	0	1	0	0	1	1	1
		1	1	1	1	0	0	30	0	0	1	0	0	1	1	1
		1	1	1	1	1	0	31	1	1	1	1	1	1	1	1
		X	X	X	X	X	1	ALL								

I200 60 Hz Video Line Counter
I200 Location D7

256 BIT PROM P.N. 02484-032

	MNEMONIC	VLC4	VLC3	VLC2	VLC1	VLC0				ERLC	$\overline{\text{VBLANK}}$	$\overline{\text{VDRIVE}}$	$\overline{\text{NL4}}$	$\overline{\text{NL3}}$	$\overline{\text{NL2}}$	$\overline{\text{NL1}}$	$\overline{\text{NL0}}$
PIN		14	13	12	11	10	15			9	7	6	5	4	3	2	1
	INPUT								OUTPUT								
BIT		A4	A3	A2	A1	A0	ENB	WORD		B7	B6	B5	B4	B3	B2	B1	B0
		0	0	0	0	0	0	0		0	1	1	1	1	1	1	0
		0	0	0	0	1	0	1		0	1	1	1	1	1	0	1
		0	0	0	1	0	0	2		0	1	1	1	1	1	0	0
		0	0	0	1	1	0	3		0	1	1	1	1	0	1	1
		0	0	1	0	0	0	4		0	1	1	1	1	0	1	0
		0	0	1	0	1	0	5		0	1	1	1	1	0	0	1
		0	0	1	1	0	0	6		0	1	1	1	1	0	0	0
		0	0	1	1	1	0	7		0	1	1	1	0	1	1	1
		0	1	0	0	0	0	8		0	1	1	1	0	1	1	0
		0	1	0	0	1	0	9		0	1	1	1	0	1	0	1
		0	1	0	1	0	0	10		0	1	1	1	0	1	0	0
		0	1	0	1	1	0	11		0	1	1	1	0	0	1	1
		0	1	1	0	0	0	12		0	1	1	1	0	0	1	0
		0	1	1	0	1	0	13		0	1	1	1	0	0	0	1
		0	1	1	1	0	0	14		0	1	1	1	0	0	0	0
		0	1	1	1	1	0	15		0	1	1	0	1	1	1	1
		1	0	0	0	0	0	16		0	1	1	0	1	1	1	0
		1	0	0	0	1	0	17		0	1	1	0	1	1	0	1
		1	0	0	1	0	0	18		0	1	1	0	1	1	0	0
		1	0	0	1	1	0	19		0	1	1	0	1	0	1	1
		1	0	1	0	0	0	20		0	1	1	0	1	0	1	0
		1	0	1	0	1	0	21		0	1	1	0	1	0	0	1
		1	0	1	1	0	0	22		0	1	1	0	1	0	0	0
		1	0	1	1	1	0	23		0	0	1	0	0	1	1	1
		1	1	0	0	0	0	24		0	0	1	0	0	1	1	1
		1	1	0	0	1	0	25		0	0	1	0	0	1	1	1
		1	1	0	1	0	0	26		0	0	1	0	0	1	1	1
		1	1	0	1	1	0	27		0	0	1	0	0	1	1	1
		1	1	1	0	0	0	28		1	1	1	1	1	1	1	1
		1	1	1	0	1	0	29		0	0	1	0	0	0	1	1
		1	1	1	1	0	0	30		0	0	1	0	0	0	1	0
		1	1	1	1	1	0	31		0	0	1	0	0	0	0	1
		X	X	X	X	X	1	ALL									

I200 50 Hz Video Line Counter
I200 Location E7

SPEC. #02999-031 REVISION: 001

TITLE: II200 COMMAND DECODER (NON-SCROLLING VERSION)

	ADD.	--DATA-- 87654321	ADD.	--DATA-- 87654321	ADD.	--DATA-- 87654321	ADD.	--DATA-- 87654321
Rubout	001	11111111	129	11111111	257	11111111	385	11111111
~	002	01110010	130	01001000	258	01110010	386	01010000
}	003	01110010	131	01001000	259	01110010	387	01010000
|	004	01110010	132	01001000	260	01110010	388	01010000
{	005	01110010	133	01001000	261	01110010	389	01010000
z	006	01110010	134	01001000	262	01110010	390	01010000
y	007	01110010	135	01001000	263	01110010	391	01010000
x	008	01110010	136	01001000	264	01110010	392	01010000
w	009	01110010	137	01001000	265	01110010	393	01010000
v	010	01110010	138	01001000	266	01110010	394	01010000
u	011	01110010	139	01001000	267	01110010	395	01010000
t	012	01110010	140	01001000	268	01110010	396	01010000
s	013	01110010	141	01001000	269	01110010	397	01010000
r	014	01110010	142	01001000	270	01110010	398	01010000
q	015	01110010	143	01001000	271	01110010	399	01010000
p	016	01110010	144	01001000	272	01110010	400	01010000
o	017	01110010	145	01001000	273	01110010	401	01010000
n	018	01110010	146	01001000	274	01110010	402	01010000
m	019	01110010	147	01001000	275	01110010	403	01010000
l	020	01110010	148	01001000	276	01110010	404	01010000
k	021	01110010	149	01001000	277	01110010	405	01010000
j	022	01110010	150	01001000	278	01110010	406	01010000
i	023	01110010	151	01001000	279	01110010	407	01010000
h	024	01110010	152	01001000	280	01110010	408	01010000
g	025	01110010	153	01001000	281	00000010	409	01010000
f	026	01110010	154	01001000	282	01110010	410	01010000
e	027	01110010	155	01001000	283	01110010	411	01010000
d	028	01110010	156	01001000	284	01110010	412	01010000
c	029	01110010	157	01001000	285	01110010	413	01010000
b	030	01110010	158	01001000	286	01110010	414	01010000
a	031	01110010	159	01001000	287	01110010	415	01010000
`	032	01110010	160	01001000	288	01110010	416	01010000
←	033	01110010	161	01001000	289	01110010	417	01010000
↑	034	01110010	162	01001000	290	01110010	418	01010000
]	035	01110010	163	01001000	291	01110010	419	01010000
\	036	01110010	164	01001000	292	01110010	420	01010000
[	037	01110010	165	01001000	293	01110010	421	01010000
Z	038	01110010	166	01001000	294	01110010	422	01010000
Y	039	01110010	167	01001000	295	01110010	423	01010000
X	040	01110010	168	01001000	296	01110010	424	01010000
W	041	01110010	169	01001000	297	01110010	425	01010000
V	042	01110010	170	01001000	298	01110010	426	01010000
U	043	01110010	171	01001000	299	01110010	427	01010000
T	044	01110010	172	01001000	300	01110010	428	01010000
S	045	01110010	173	01001000	301	01110010	429	01010000
R	046	01110010	174	01001000	302	01110010	430	01010000
Q	047	01110010	175	01001000	303	01110010	431	01010000
P	048	01110010	176	01001000	304	01110010	432	01010000
	Col. 0 - 78		Col. 79		Col. 0 - 78		Col. 79	
	Line 23				Line 0 - 22			

SPEC. #02999-031 REVISION: 001

TITLE: II200 COMMAND DECODER (NON-SCROLLING VERSION)

	ADD.	--DATA-- 87654321	ADD.	--DATA-- 87654321	ADD.	--DATA-- 87654321	ADD.	--DATA-- 87654321
0	049	01110010	177	01001000	305	01110010	433	01010000
N	050	01110010	178	01001000	306	01110010	434	01010000
M	051	01110010	179	01001000	307	01110010	435	01010000
L	052	01110010	180	01001000	308	01110010	436	01010000
K	053	01110010	181	01001000	309	01110010	437	01010000
J	054	01110010	182	01001000	310	01110010	438	01010000
I	055	01110010	183	01001000	311	01110010	439	01010000
H	056	01110010	184	01001000	312	01110010	440	01010000
G	057	01110010	185	01001000	313	01110010	441	01010000
F	058	01110010	186	01001000	314	01110010	442	01010000
E	059	01110010	187	01001000	315	01110010	443	01010000
D	060	01110010	188	01001000	316	01110010	444	01010000
C	061	01110010	189	01001000	317	01110010	445	01010000
B	062	01110010	190	01001000	318	01110010	446	01010000
A	063	01110010	191	01001000	319	01110010	447	01010000
@	064	01110010	192	01001000	320	01110010	448	01010000
?	065	01110010	193	01001000	321	01110010	449	01010000
>	066	01110010	194	01001000	322	01110010	450	01010000
=	067	01110010	195	01001000	323	01110010	451	01010000
<	068	01110010	196	01001000	324	01110010	452	01010000
;	069	01110010	197	01001000	325	01110010	453	01010000
:	070	01110010	198	01001000	326	01110010	454	01010000
9	071	01110010	199	01001000	327	01110010	455	01010000
8	072	01110010	200	01001000	328	01110010	456	01010000
7	073	01110010	201	01001000	329	01110010	457	01010000
6	074	01110010	202	01001000	330	01110010	458	01010000
5	075	01110010	203	01001000	331	01110010	459	01010000
4	076	01110010	204	01001000	332	01110010	460	01010000
3	077	01110010	205	01001000	333	01110010	461	01010000
2	078	01110010	206	01001000	334	01110010	462	01010000
1	079	01110010	207	01001000	335	01110010	463	01010000
ø	080	01110010	208	01001000	336	01110010	464	01010000
/	081	01110010	209	01001000	337	01110010	465	01010000
•	082	01110010	210	01001000	338	01110010	466	01010000
-	083	01110010	211	01001000	339	01110010	467	01010000
,	084	01110010	212	01001000	340	01110010	468	01010000
+	085	01110010	213	01001000	341	01110010	469	01010000
*	086	01110010	214	01001000	342	01110010	470	01010000
)	087	01110010	215	01001000	343	01110010	471	01010000
(	088	01110010	216	01001000	344	01110010	472	01010000
'	089	01110010	217	01001000	345	01110010	473	01010000
&	090	01110010	218	01001000	346	01110010	474	01010000
%	091	01110010	219	01001000	347	01110010	475	01010000
$	092	01110010	220	01001000	348	01110010	476	01010000
#	093	01110010	221	01001000	349	01110010	477	01010000
"	094	01110010	222	01001000	350	01110010	478	01010000
!	095	01110010	223	01001000	351	01110010	479	01010000
sp	096	01110010	224	01001000	352	01110010	480	01010000

Col. 0 - 78 | Col. 79 | Col. 0 - 78 | Col. 79

Line 23 | Line 0 - 22

SPEC. #02999-031 REVISION: 00

TITLE: II200 COMMAND DECODER (NON-SCROLLING VERSION)

	ADD.	--DATA-- 87654321	ADD.	--DATA-- 87654321	ADD.	--DATA-- 87654321	ADD.	--DATA-- 87654321
≤	097	11111111	225	11111111	353	11111111	481	11111111
↑	098	11111111	226	11111111	354	11111111	482	11111111
⊐	099	11101000	227	11101000	355	11110000	483	11110000
↘	100	11110011	228	11110011	356	11110011	484	11110011
[	101	11111111	229	11111111	357	11111111	485	11111111
Z	102	11001000	230	11001000	358	11001000	486	11001000
Y	103	11110010	231	11001000	359	11110010	487	11010000
X	104	11111111	232	11111111	360	11111111	488	11111111
W	105	11101010	233	11101010	361	11101010	489	11101010
V	106	11111111	234	11111111	362	11111111	490	11111111
U	107	11111111	235	11111111	363	11111111	491	11111111
T	108	11111111	236	11111111	364	11111111	492	11111111
S	109	111Ø11ØØ	237	111Ø11ØØ	365	111Ø11ØØ	493	111Ø11ØØ
R	110	11111111	238	11111111	366	11111111	494	11111111
Q	111	111Ø1Ø11	239	111Ø1Ø11	367	111Ø1Ø11	495	111Ø1Ø11
P	112	11111111	240	11111111	368	11111111	496	11111111
O	113	11110110	241	11110110	369	11110110	497	11110110
N	114	11110101	242	11110101	370	11110101	498	11110101
M	115	11011111	243	11011111	371	11011111	499	11011111
L	116	10001000	244	10001000	372	10001000	500	10001000
K	117	11001001	245	11001001	373	11001001	501	11001001
J	118	11101000	246	11101000	374	11110000	502	11110000
I	119	11111111	247	11111111	375	11111111	503	11111111
H	120	11110111	248	11110111	376	11110111	504	11110111
G	121	11110100	249	11110100	377	11110100	505	11110100
F	122	11111111	250	11111111	378	11111111	506	11111111
E	123	11111111	251	11111111	379	11111111	507	11111111
D	124	11111111	252	11111111	380	11111111	508	11111111
C	125	11111111	253	11111111	381	11111111	509	11111111
B	126	11111111	254	11111111	382	11111111	510	11111111
A	127	11111111	255	11111111	383	11111111	511	11111111
@	128	11111111	256	11111111	384	11111111	512	11111111

└── Col. 0 - 78 ──┘ └── Col. 79 ──┘ └── Col. 0 - 78 ──┘ └── Col. 79 ──┘

└──────── Line 23 ────────┘ └──────── Line 0 - 22 ────────┘

Decoded outputs	8	7	6	5	4	3	2	1	
Input Time ($\overline{IT}$)				X	0	000			$\overline{LF}$
				X	0	001			$\overline{Roll\ I}$
Erase ($\overline{CLEAR}$)				X	0	010			$\overline{FSP}$
Carriage Return Delayed ($\overline{CRD}$)				X	0	011			$\overline{UP}$
				X	0	100			$\overline{Bell}$
				X	0	101			$\overline{KB\ Lock}$
				X	0	110			$\overline{KB\ Unlock}$
				X	0	111			$\overline{BSP}$
				0	X	000			$\overline{Home}$
				0	X	001			$\overline{ER\ Line}$
				0	X	010			$\overline{Curad}$
				0	X	011			$\overline{PCPYON}$
				0	X	100			$\overline{PCPYOFF}$
				0	X	101			
				0	X	110			
				0	X	111			

SPEC. #02999-032 REVISION: 000

TITLE: II200/II400 9 X 9 U.C. CHAR. GEN.

ADD.	--DATA-- 87654321	ADD.	--DATA-- 87654321	ADD.	--DATA-- 87654321	ADD.	--DATA-- 87654321
001	11111111	129	11111111	257	11111111	385	11111111
002	11[illegible]111	130	1[illegible]111	258	11111111	386	11[illegible]111
003	1[illegible]111011	131	1[illegible]11011	259	11111111	387	1[illegible]111011
004	1[illegible]111011	132	1[illegible]11011	260	11111111	388	1[illegible]111011
005	1[illegible]111011	133	1[illegible]111	261	11111111	389	1[illegible]111011
006	1[illegible]10111	134	10111111	262	11111111	390	1[illegible]111011
007	1[illegible]111111	135	10111111	263	11111111	391	1[illegible]111011
008	11[illegible]111	136	10111111	264	11111111	392	11[illegible]111
009	11111111	137	11111111	265	11111111	393	11111111
010	11[illegible]111	138	11[illegible]111	266	11111111	394	11[illegible]1111
011	1[illegible]11010	139	1[illegible]11011	267	11[illegible]0110	395	11[illegible]1111
012	1[illegible]111011	140	1[illegible]11011	268	11[illegible]0110	396	11[illegible]1111
013	1[illegible]111011	141	1[illegible]11011	269	11[illegible]1111	397	11[illegible]1111
014	1[illegible]111011	142	1[illegible]11011	270	11[illegible]1111	398	11[illegible]1111
015	1[illegible]111011	143	1[illegible]01010	271	11111111	399	11[illegible]1111
016	1[illegible]111011	144	1[illegible]11011	272	11[illegible]1111	400	11[illegible]1111
017	11111111	145	11111111	273	11111111	401	11111111
018	1[illegible]10010	146	1[illegible]111	274	1[illegible]10111	402	11[illegible]111
019	1[illegible]111011	147	1[illegible]11011	275	1[illegible]10111	403	1[illegible]111011
020	1[illegible]111011	148	1[illegible]11011	276	1[illegible]11010	404	1[illegible]111011
021	1[illegible]10111	149	1[illegible]111	277	11111111	405	1[illegible]10111
022	1[illegible]111011	150	10111111	278	11111111	406	11[illegible]1110
023	1[illegible]111011	151	1[illegible]10111	279	11111111	407	11[illegible]1110
024	1[illegible]10010	152	1[illegible]11011	280	11111111	408	1[illegible]00011
025	11111111	153	11111111	281	11111111	409	11111111
026	11[illegible]111	154	11[illegible]111	282	11111111	410	1[illegible]11011
027	1[illegible]111011	155	1[illegible]11011	283	11[illegible]0111	411	1[illegible]11011
028	10111111	156	11[illegible]1110	284	1[illegible]11011	412	1[illegible]10111
029	10111111	157	11[illegible]0110	285	11[illegible]0111	413	1[illegible]10111
030	10111111	158	11111010	286	11[illegible]0111	414	1[illegible]11011
031	1[illegible]111011	159	1[illegible]11011	287	1[illegible]11011	415	1[illegible]11011
032	11[illegible]111	160	11[illegible]111	288	11[illegible]0111	416	11[illegible]0111
033	11111111	161	11111111	289	11111111	417	11111111
034	1[illegible]10010	162	1[illegible]11011	290	11[illegible]1111	418	1[illegible]10111
035	1[illegible]111011	163	111[illegible]1111	291	11[illegible]0010	419	11[illegible]0111
036	1[illegible]111011	164	111[illegible]1111	292	1[illegible]01111	420	11[illegible]0111
037	1[illegible]111011	165	111[illegible]1111	293	11[illegible]0010	421	1[illegible]10111
038	1[illegible]111011	166	111[illegible]1111	294	111[illegible]1011	422	1[illegible]11011
039	1[illegible]111011	167	111[illegible]1111	295	11[illegible]0010	423	1111[illegible]0111
040	1[illegible]10010	168	11101111	296	111[illegible]1111	424	1111[illegible]0111
041	11111111	169	11111111	297	11111111	425	11111111
042	1[illegible]11011	170	1[illegible]111011	298	1[illegible]11011	426	1[illegible]11011
043	10111111	171	1[illegible]11011	299	1[illegible]11011	427	10111111
044	10111111	172	1[illegible]11011	300	1111[illegible]111	428	1[illegible]10111
045	1[illegible]11111	173	1[illegible]11011	301	111[illegible]1111	429	1111[illegible]1011
046	10111111	174	1[illegible]11011	302	11[illegible]1111	430	1111[illegible]1011
047	10111111	175	1[illegible]11011	303	1[illegible]11011	431	1[illegible]11011
048	1[illegible]11011	176	11[illegible]0010	304	1[illegible]11011	432	11[illegible]0010

SPEC. #02999-032 REVISION: 000

TITLE: II200/II400 9 X 9 U.C. CHAR. GEN.

ADD.	--DATA-- 87654321	ADD.	--DATA-- 87654321	ADD.	--DATA-- 87654321	ADD.	--DATA-- 87654321
049	11111111	177	11111111	305	11111111	433	11111111
050	1[illegible]11	178	1[illegible]11	306	11001110	434	1[illegible]010
051	1[illegible]1111	179	1[illegible]11	307	11001110	435	11011110
052	1[illegible]1111	180	1[illegible]11	308	11001111	436	11111111
053	1[illegible]1111	181	11011010	309	11011111	437	1[illegible]111
054	1[illegible]1111	182	11[illegible]111	310	11001011	438	1[illegible]011
055	1[illegible]1111	183	11[illegible]110	311	11011110	439	1[illegible]011
056	1[illegible]1111	184	11101111	312	11[illegible]010	440	11[illegible]111
057	11111111	185	11111111	313	11111111	441	11111111
058	11[illegible]111	186	1[illegible]011	314	11[illegible]111	442	1[illegible]011
059	1[illegible]1011	187	1[illegible]011	315	11101110	443	11111010
060	1[illegible]1111	188	1[illegible]011	316	11011111	444	11110111
061	1[illegible]1111	189	1[illegible]011	317	11111111	445	11111111
062	1[illegible]1011	190	1[illegible]011	318	11111111	446	11011111
063	1[illegible]1011	191	1[illegible]011	319	11111111	447	11011110
064	11[illegible]011	192	11[illegible]111	320	11111111	448	10111111
065	11111111	193	11111111	321	11111111	449	11111111
066	1[illegible]1011	194	1[illegible]011	322	11[illegible]110	450	11[illegible]111
067	1[illegible]1011	195	11011010	323	11101111	451	11011010
068	1[illegible]1011	196	11[illegible]111	324	11101110	452	11011010
069	1[illegible]1011	197	11101111	325	11101110	453	11[illegible]111
070	1[illegible]1011	198	11[illegible]111	326	11101110	454	1[illegible]011
071	1[illegible]1011	199	11011010	327	11101111	455	1[illegible]011
072	1[illegible]1011	200	1[illegible]011	328	11[illegible]110	456	11[illegible]111
073	11111111	201	11111111	329	11111111	457	11111111
074	11[illegible]111	202	1[illegible]011	330	11101110	458	11[illegible]111
075	11101111	203	11011010	331	11101111	459	1[illegible]011
076	11101111	204	11[illegible]111	332	11[illegible]110	460	1[illegible]011
077	11101111	205	11101111	333	11[illegible]110	461	11[illegible]011
078	11101111	206	11101111	334	11[illegible]110	462	11111011
079	11101111	207	11101111	335	11101111	463	11111010
080	11[illegible]111	208	11101111	336	11101110	464	11[illegible]110
081	11111111	209	11111111	337	11111111	465	11111111
082	11111011	210	1[illegible]011	338	11111111	466	11111111
083	11111011	211	11111011	339	11011010	467	11[illegible]1111
084	11111011	212	11110111	340	11[illegible]110	468	11[illegible]1111
085	11111011	213	11101111	341	1[illegible]011	469	11111111
086	1[illegible]1011	214	11011111	342	11[illegible]110	470	11[illegible]1111
087	1[illegible]1011	215	10111111	343	11011010	471	11[illegible]1111
088	11[illegible]010	216	1[illegible]011	344	11111111	472	11111111
089	11111111	217	11111111	345	11111111	473	11111111
090	1[illegible]1011	218	11[illegible]111	346	11111111	474	11111111
091	1[illegible]1111	219	11011111	347	11101111	475	11[illegible]1111
092	1[illegible]1111	220	11011111	348	11101111	476	11[illegible]1111
093	1[illegible]1111	221	11011111	349	1[illegible]011	477	11111111
094	1[illegible]1111	222	11011111	350	11101111	478	11[illegible]1111
095	1[illegible]1111	223	11011111	351	11101111	479	11101110
096	1[illegible]1011	224	11[illegible]111	352	11111111	480	11011111

SPEC. #02999-032 REVISION: 000

TITLE: II200/II400 9 X 9 U.C. CHAR. GEN.

ADD.	--DATA-- 87654321	ADD.	--DATA-- 87654321	ADD.	--DATA-- 87654321	ADD.	--DATA-- 87654321
097	11111111	225	11111111	353	11111111	481	11111111
098	11111111	226	11011110	354	11111111	482	11111111
099	11111111	227	11111111	355	11111111	483	11111111
100	11111111	228	11101110	356	11111111	484	11101111
101	11111111	229	11101111	357	11111111	485	11111111
102	11111111	230	11110110	358	11101111	486	11101111
103	11111111	231	11110111	359	11101110	487	11111111
104	11111111	232	11111110	360	11111111	488	11111111
105	11111111	233	11111111	361	11111111	489	11111111
106	11111111	234	11101111	362	11111111	490	11111111
107	11111111	235	11110111	363	11111111	491	11111111
108	11111111	236	11110111	364	11111111	492	11111111
109	11111111	237	11110111	365	11111111	493	11111111
110	11111111	238	11110111	366	11111111	494	11111111
111	11111111	239	11110111	367	11111111	495	11111111
112	11111111	240	11101111	368	11111111	496	11111111
113	11111111	241	11111111	369	11111111	497	11111111
114	11111111	242	11101111	370	11111111	498	11111111
115	11111111	243	11101111	371	11111111	499	11101111
116	11111111	244	11101111	372	11111111	500	11101111
117	11111111	245	11101111	373	11111111	501	11111111
118	11111111	246	11101111	374	11111111	502	11101111
119	11111111	247	11101111	375	11101111	503	11111111
120	11111111	248	11101111	376	11101111	504	11111111
121	11111111	249	11111111	377	11111111	505	11111111
122	11111111	250	11111111	378	11111111	506	11101111
123	11111111	251	11101111	379	11111111	507	11111111
124	11111111	252	11111111	380	11110110	508	11110111
125	11111111	253	11111111	381	11101111	509	11101111
126	11111111	254	11111111	382	11101110	510	11101111
127	11111111	255	11101111	383	11011111	511	11111111
128	11111111	256	11111111	384	11011110	512	11101111

SPEC. #02999-033 REVISION: 000

TITLE: II200/II400 9 X 9 LOWER CASE CHAR. GEN.

ADD.	--DATA-- 87654321	ADD.	--DATA-- 87654321	ADD.	--DATA-- 87654321	ADD.	--DATA-- 87654321
001	11111111	129	11111111	257	11111111	385	11111111
002	11111111	130	11111111	258	11111111	386	11111111
003	11111111	131	11111111	259	11111111	387	11111111
004	11111111	132	11111111	260	11111111	388	11111111
005	11111111	133	11111111	261	11111111	389	11111111
006	11111111	134	11111111	262	11111111	390	11111111
007	11111111	135	11111111	263	11111111	391	11111111
008	11111111	136	11111111	264	11111111	392	11111111
009	11111111	137	11111111	265	11111111	393	11111111
010	11111111	138	11111111	266	11111111	394	11111111
011	11111111	139	11111111	267	11111111	395	11111111
012	11111111	140	11111111	268	11111111	396	11111111
013	11111111	141	11111111	269	11111111	397	11111111
014	11111111	142	11111111	270	11111111	398	11111111
015	11111111	143	11111111	271	11111111	399	11111111
016	11111111	144	11111111	272	11111111	400	11111111
017	11111111	145	11111111	273	11111111	401	11111111
018	11111111	146	11111111	274	11111111	402	11111111
019	11111111	147	11111111	275	11111111	403	11111111
020	11111111	148	11111111	276	11111111	404	11111111
021	11111111	149	11111111	277	11111111	405	11111111
022	11111111	150	11111111	278	11111111	406	11111111
023	11111111	151	11111111	279	11111111	407	11111111
024	11111111	152	11111111	280	11111111	408	11111111
025	11111111	153	11111111	281	11111111	409	11111111
026	11111111	154	11111111	282	11111111	410	11111111
027	11111111	155	11111111	283	11111111	411	11111111
028	11111111	156	11111111	284	11111111	412	11111111
029	11111111	157	11111111	285	11111111	413	11111111
030	11111111	158	11111111	286	11111111	414	11111111
031	11111111	159	11111111	287	11111111	415	11111111
032	11111111	160	11111111	288	11111111	416	11111111
033	11111111	161	11111111	289	11111111	417	11111111
034	11111111	162	11111111	290	11111111	418	11111111
035	11111111	163	11111111	291	11111111	419	11111111
036	11111111	164	11111111	292	11111111	420	11111111
037	11111111	165	11111111	293	11111111	421	11111111
038	11111111	166	11111111	294	11111111	422	11111111
039	11111111	167	11111111	295	11111111	423	11111111
040	11111111	168	11111111	296	11111111	424	11111111
041	11111111	169	11111111	297	11111111	425	11111111
042	11111111	170	11111111	298	11111111	426	11111111
043	11111111	171	11111111	299	11111111	427	11111111
044	11111111	172	11111111	300	11111111	428	11111111
045	11111111	173	11111111	301	11111111	429	11111111
046	11111111	174	11111111	302	11111111	430	11111111
047	11111111	175	11111111	303	11111111	431	11111111
048	11111111	176	11111111	304	11111111	432	11111111

SPEC. #02999-033 REVISION: 000

TITLE: II200/II400 9 X 9 LOWER CASE CHAR. GEN.

ADD.	--DATA-- 87654321	ADD.	--DATA-- 87654321	ADD.	--DATA-- 87654321	ADD.	--DATA-- 87654321
049	11111111	177	11111111	305	11111111	433	11111111
050	11111111	178	11111111	306	11111111	434	11111111
051	11111111	179	11111111	307	11111111	435	11110110
052	11111111	180	11111111	308	11110010	436	11101111
053	11011010	181	11111111	309	11111111	437	11101110
054	11111111	182	11111111	310	11110010	438	11101111
055	11011010	183	11111111	311	11111011	439	11110110
056	11111111	184	11111011	312	11110010	440	11110011
057	11111111	185	11111111	313	11111111	441	11111111
058	11111111	186	11111111	314	11111111	442	11111111
059	11111111	187	11111111	315	11111111	443	11111111
060	11111111	188	11111111	316	11111111	444	11111111
061	11111111	189	11111111	317	11111111	445	11111111
062	11111111	190	11111111	318	11111111	446	11111111
063	11111111	191	11111111	319	11111111	447	11111111
064	11111111	192	11111111	320	11111111	448	11111111
065	11111111	193	11111111	321	11111111	449	11111111
066	11111011	194	11101111	322	11101111	450	11101111
067	11111011	195	11101111	323	11101111	451	11101111
068	11111011	196	11101111	324	11110011	452	11101111
069	11110011	197	11101111	325	11101111	453	11111111
070	11111011	198	11101111	326	11101111	454	11101111
071	11111011	199	11101111	327	11101111	455	11101111
072	11101011	200	11110111	328	11110010	456	11101111
073	11111111	201	11111111	329	11111111	457	11111111
074	11111111	202	11111111	330	11111111	458	11111111
075	11111111	203	11111111	331	11111111	459	11111111
076	11111111	204	11111111	332	11111111	460	11111111
077	11111111	205	11111111	333	11111111	461	11111111
078	11111111	206	11111111	334	11111111	462	11111111
079	11111111	207	11111111	335	11111111	463	11111111
080	11111111	208	11111111	336	11111111	464	11111111
081	11111111	209	11111111	337	11111111	465	11111111
082	11111111	210	11111111	338	11111111	466	11111111
083	11111111	211	11111111	339	11111111	467	11101110
084	11101111	212	11101111	340	11111011	468	11101111
085	11011010	213	11011011	341	11111011	469	11110010
086	11101111	214	11011011	342	11111011	470	11101111
087	11011110	215	11011011	343	11110011	471	11101110
088	11110010	216	11011011	344	11101011	472	11011111
089	11111111	217	11111111	345	11111111	473	11111111
090	11111111	218	11111111	346	11111111	474	11111111
091	11111111	219	11111111	347	11111111	475	11111111
092	11111111	220	11111111	348	11111111	476	11111111
093	11111111	221	11111111	349	11111111	477	11111111
094	11111111	222	11111111	350	11111111	478	11111111
095	11111111	223	11111111	351	11111111	479	11111111
096	11111111	224	11111111	352	11111111	480	11111111

SPEC. #02999-033 REVISION: 000

TITLE: II200/II400 9 X 9 LOWER CASE CHAR. GEN.

ADD.	--DATA-- 87654321	ADD.	--DATA-- 87654321	ADD.	--DATA-- 87654321	ADD.	--DATA-- 87654321
097	11111111	225	11111111	353	11111111	481	11111111
098	11[illegible]010	226	11111111	354	11111111	482	11[illegible]1110
099	11[illegible]1111	227	11111111	355	11111111	483	1[illegible]11
100	1[illegible]111	228	1[illegible]111	356	1[illegible]11	484	1111[illegible]010
101	11[illegible]1111	229	1[illegible]11	357	11[illegible]010	485	11111111
102	11[illegible]1111	230	1[illegible]11	358	11[illegible]111	486	11111111
103	11[illegible]1111	231	1[illegible]11	359	11[illegible]110	487	11111111
104	11[illegible]1111	232	1[illegible]11	360	11[illegible]111	488	11111111
105	11111111	233	11111111	361	11111111	489	11111111
106	11111111	234	11111111	362	11111111	490	11111111
107	11111111	235	11111111	363	11111111	491	11111111
108	11111111	236	11111111	364	11111111	492	11111111
109	11111111	237	11111111	365	11111111	493	11111111
110	11111111	238	11111111	366	11111111	494	11111111
111	11111111	239	11111111	367	11111111	495	11111111
112	11111111	240	11111111	368	11111111	496	11111111
113	11111111	241	11111111	369	11111111	497	11111111
114	11111111	242	11111111	370	11111111	498	1[illegible]11
115	11111111	243	11111111	371	11111111	499	1[illegible]11
116	11[illegible]011	244	11[illegible]111	372	1[illegible]11	500	1[illegible]11
117	1[illegible]011	245	1[illegible]010	373	1[illegible]11	501	1[illegible]11
118	1[illegible]011	246	1[illegible]011	374	1[illegible]11	502	1[illegible]11
119	1[illegible]011	247	1[illegible]010	375	1[illegible]11	503	1[illegible]11
120	11[illegible]011	248	11[illegible]111	376	11[illegible]111	504	1[illegible]11
121	11111011	249	11111111	377	11111111	505	11111111
122	11[illegible]111	250	11111111	378	11111111	506	11111111
123	11111111	251	11111111	379	11111111	507	11111111
124	11111111	252	11111111	380	11111111	508	11111111
125	11111111	253	11111111	381	11111111	509	11111111
126	11111111	254	11111111	382	11111111	510	11111111
127	11111111	255	11111111	383	11111111	511	11111111
128	11111111	256	11111111	384	11111111	512	11111111

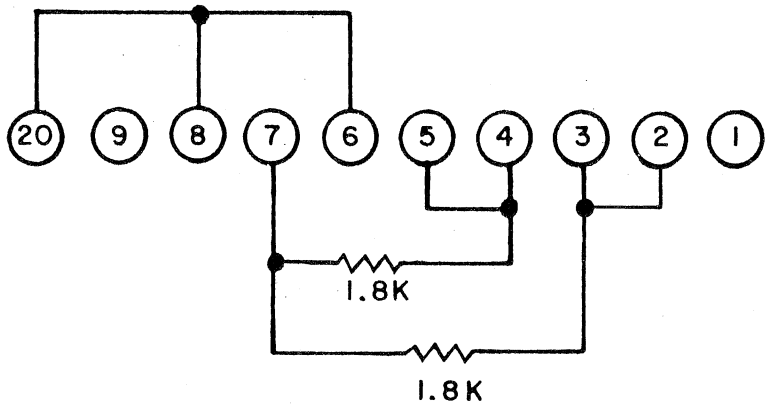

TURN AROUND PLUG
25 PIN CINCH CONNECTOR (FEMALE)

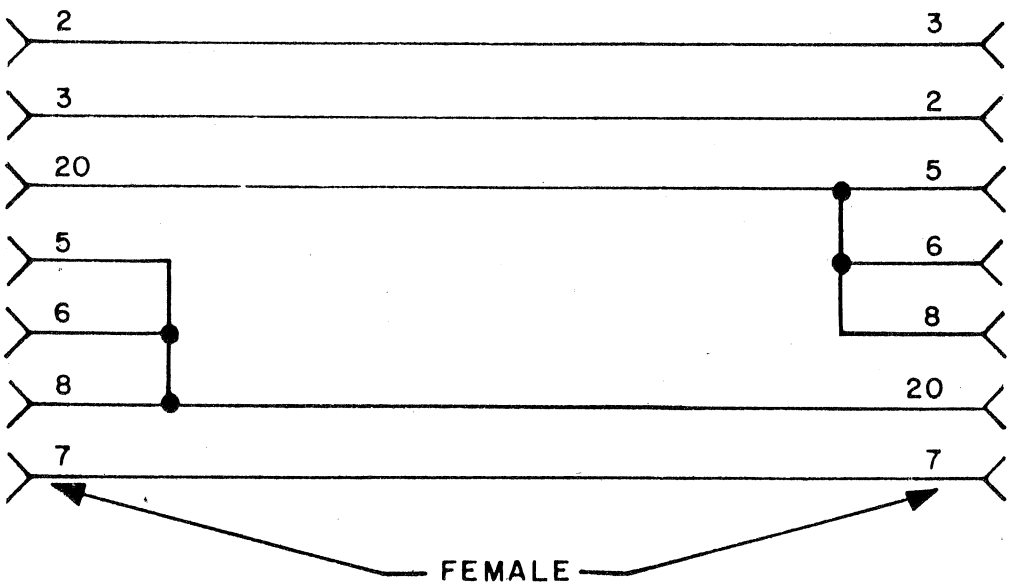

CROSS COUPLER
25 PIN CINCH CONNECTOR (FEMALE)

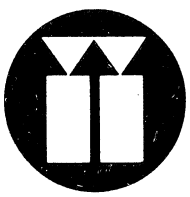

Infoton

INFOTON • SECOND AVENUE, BURLINGTON, MASSACHUSETTS 01803
AREA CODE 617-272-6660

Document No. 03232
July, 1977