VARIAN 620/L SYSTEM
MAINTENANCE MANUAL

varian data machines /a varian subsidiary
©1974 printed in USA

INDEX - SYSTEM MAINTENANCE MANUAL

	SECTION	CONTENTS
1.	System Data	Documentation Record Manual Listing System Memo (s) Systems Arrangement Drawing
2.	Engineering Specifications	Engineering Description PPS (s), SPS (s), Maintenance Aid
3.	Test Data	Memory Schmoo Diagram
4.	Circuit Boards	Assembly Drawing Logic Diagrams Parts Lists
5.	Power Supply	Procurement Spec. or Assy. Dwg. Vendor or VDM Schematic Parts Lists
6.	Wire Lists	All wire lists
7.	Option Documentation	Option and Controller documentation matched to the revision level (s) of the equipment.
8.	Change Notices	All EN's affecting any of the supplied documentation contained in this manual.

Please note the above is a standard index. Each System Maintenance Manual is assembled to meet specific system requirements and may not require all documentation shown on the index. Please be assured all maintenance documentation required to service this system has been included.

varian data machines
a varian subsidiary

DOCUMENTATION RECORD

CUSTOMER VARIAN INSTRUMENT
MODEL NO. 620/L-100
SYS. SERIAL NO. _____

JOB ORDER NO. 74075
SHIP DATE _____
CHECKED BY _____

UNIT	DOCUMENTATION NO.	REV	ART REV	S/N	DESCRIPTION	INSP.
	01E1035	-	-	-	FRAME ASSY	
	01D1036	-	-	-	FRONT PANEL ASSY	
	93D0275	-	-	-	POWER SUPPLY INSTALLATION	
	3238441	-	-	-	CORE STACK	
DM288	44P0506	P	-	11836	SENSE INHIBIT	
DM288	44P0506	P	-	11837	SENSE INHIBIT	
DM288	44P0506	P	-	11827	SENSE INHIBIT	
DM288	44P0506	P	-	11838	SENSE INHIBIT	
DM288	44P0506				SENSE INHIBIT	
DM288	44P0506				SENSE INHIBIT	
DM295	44P0515				DISPLAY BOARD	
DM327	44P0578	K	-	3538	DRIVE/SINK SW	
DM327	44P0578				DRIVE/SINK SW	
DM327	44P0578				DRIVE/SINK SW	
DM336	44P0592	E	-	4861	REGISTER CARD	
DM336	44P0592	E	-	4915	REGISTER CARD	
DM336	44P0592	E	-	4874	REGISTER CARD	
DM336	44P0592				REGISTER CARD	
DM336	44P0592				REGISTER CARD	
DM336	44P0592				REGISTER CARD	
DM337	44P0593	P	-	1398	PROCESSOR CONT. #4	
DM337	44P0593				PROCESSOR CONT. #4	
DM338	44P0594	D	-	1872	HM/D & F.A.	
DM338	44P0594				H M/D & F.A.	
DM339	44P0595	B	-	1744	PROCESSOR CONT #1	
DM339	44P0595				PROCESSOR CONT #1	
DM340	44P0596	F	-	1627	PROCESSOR CONT. #2	
DM340	44P0596				PROCESSOR CONT. #2	
DM341	44P0597	F	-	1817	PROCESSOR CONT. #3	
DM341	44P0597				PROCESSOR CONT. #3	
DM342	44P0598	E	-	1730	DMA	
DM343	44P0671	F	-	090	MEMORY T AND CONT.	
DM343	44P0599				MEMORY T AND CONT.	

PREPARED BY DB DATE 11-19-74

NOTE:

varian data machines
a varian subsidiary

DOCUMENTATION RECORD

CUSTOMER VARIAN INSTRUMENT
MODEL NO. 620 L 100
SYS. SERIAL NO. _____

JOB ORDER NO. 74075
SHIP DATE _____
CHECKED BY _____

UNIT	DOCUMENTATION NO.	REV	ART REV	S/N	DESCRIPTION	INSP
DM301	44P0521	F	–	1400	MEMORY BUFFER	
DM308	44P0530				TERM SHOE	
DM124-1	44P0172				PIM	
DM123-3	44P0185	V	–	2649	PFR/ RTC	
	83P0035	R	-	2740	POWER SUPPLY	
	95W0908				WIRE LIST	
	44P0725	F1	-	–	PANEL SHOE BD.	

PREPARED BY DB DATE 11-19-74

NOTE:

additional routing
Salesman # 999
Bryant
R. Douglas
M. Drees (2)
M. Peralta
Prod. Control
Q.C.
Sales Admin. (2)
C. Stark (2)
Job File

varian data machines /a varian subsidiary
2722 michelson drive / irvine / california / 92664 / (714) 833-2400

Note: Please forward along with other documentation.

system memo DH-0628-s.c.

customer: VID

sales order: 74075

charge number: 74075

date: October 11, 1974

from: D. Hitchcock D. Hitchcock

Please reference Systems Arrangement Drawing

INDEX:

1.0	Equipment Summary
2.0	System Block Diagram (when applicable)
3.0	System Power Requirement
4.0	Controller Board Slot Assignments
5.0	PIM BIC Assignments
6.0	Systems Wiring Requirements
6.1	System Priority
6.2	Device Address
6.3	PIM Interrupt; Interrupt Address Wiring
6.4	BIC Delete Wiring
6.5	Mag Tape/Disc Inter-Slot Wiring
6.6	Analog to Digital Wiring
6.7	Mainframe Wiring
6.7.1	Memory Wrap Around
6.8	Misc. Special Wiring
7.0	Special System Information
8.0	Cable Identification List
9.0	Appendix

1.0 EQUIPMENT SUMMARY

E-2861E - 620L-103, 16K Memory with two Chassis and one Power Supply.

E-2861E is similar to E-2861B except in areas of cable lengths, type cables, and front panel modifications.

E-2861B is documented under 01A1497.
E-2861E is documented under 01A1659.
E-2861B and E contain the standard 620L features except PIM and RTC.

Features:

- HMD-EA
- PFR
- DMA
- E-2847 Special Bootstrap Protect

E-2847 Special Bootstrap Protect performs the function of the 620/L-115 plus protects the first (0-77 octal) locations in memory.

A special documentation package is to be prepared excluding the options not contained within the system.

Special power supply cables are to be provided and tested.

The front panel is to be removed before shipping and a special termination board installed and tested on the front panel connectors.

2.0 N/A

3.0 System Power Requirement - 230VAC, 50HZ

The DC power supply should draw 6 amperes AC maximum. It is rated at 17 amps DC on the +5VDC output.

4.0 Controller Board Slot Assignments

Chassis A2

Slot	Device
14	HMD-EA
15	DMA
16	PFR
01	Memory Cable Board

Chassis A1

02	Memory Cable Board

5.0 N/A

6.0 SYSTEM WIRING REQUIREMENTS

6.1 System Priority

NOTE: RTC has been purposely left out of the priority string.

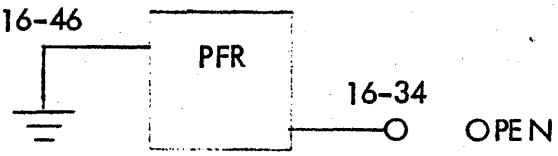

6.2 - 6.6 N/A

6.7 Mainframe Wiring

6.7.1 Memory Wraparound +16K

DELETE - L14X+ 10-32 to 13-52

ADD - Ground 13-01 to 13-52

6.8 Miscellaneous Special Wiring

Insure E-2847 boot protect wiring is installed per W/L 95W0997, Revision F or later.

Bootstrap protect jumpers should be installed on the memory timing and control board for 16K.

7.0 SPECIAL SYSTEM INFORMATION

Each system should receive a special maintenance manual consisting of documentation for the following:

1. Power Failure Restart
2. Hardware Multiply Divide
3. Bootstrap Protect E-2847
   - 98A0935 Engineering Description
   - 91D0436 Logic Diagram
4. 620/L-100 Maintenance Manual, Chapters VIII and X less the following:

   Exclude: a. Display Board Drawing 44E0515
   b. Front panel switch schematic 91D0291

NOTE: E-2847 Bootstrap Protect should be tested with the procedure given in the Engineering Description.

8.0 CABLE IDENTIFICATION

CABLE DESIGN.	FROM	TO	PART NUMBER	CABLE LENGTH	FUNCTION
X1	A1, Slot 2	A2, Slot 1	53P0547	Standard	Memory Bus
X2	A1, J31	A3, TB1	53P0569	48"	DC Power
X3	A2, J30	A3, TB1	53P0569	48"	DC Power
X4	A3, Int.	Ext. AC	53P0799	12'	AC Power
X5	A3	Ext.	53P0800	6"	Special DC

9.0 APPENDIX

1. W/L 95W0997
2. System Arrangement Drawing
3. DA Wiring Tables

mMc
Attachments

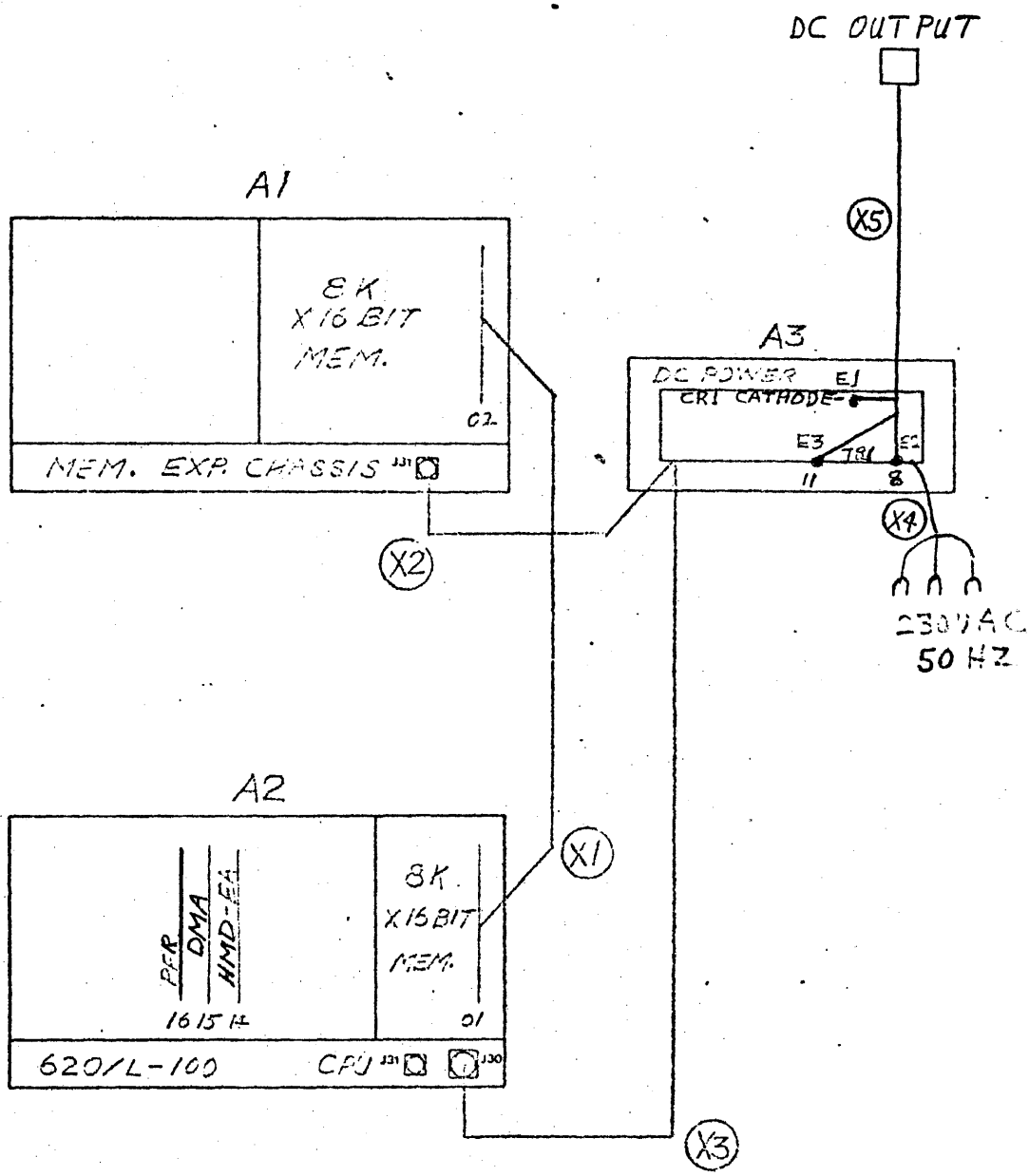

E2861E 16K MEMORY

REAR VIEW SYSTEM ASSEMBLY

X

DH

DEVICE ADDRESS WIRING TABLE A

Last Digit	Wire Pin 72 To	Wire Pin 69 To	Wire Pin 66 To
0	71	68	65
1	71	68	64
2	71	67	65
3	71	67	64
4	70	68	65
5	70	68	64
6	70	67	65
7	70	67	64

DEVICE ADDRESS WIRING TABLE B

Device	Address	Wire
BIC	20-21	65-69, 70-72, 115-118 (+5V)
BIC	22-23	65-68, 59-69, 70-72, 115-118 (+5V)
BIC	24-25	65-69, 59-72, 70-71, 115-118 (+5V)
BIC	26-27	65-68, 59-69, 69-72, 70-71, 115-118 (+5V)
L.P. Cont.	35	87-78, 82-76, 84-77, 64-66, 68-69, 70-72
PTR 150 CPS	37	64-66, 67-69, 70-72, 82-76, 84-77, 87-78
PIM	40 (IA 100-117)	64-66, 67-69, 70-72, 63-74
PIM	41 (IA 120-137)	63-66, 64-65, 67-69, 70-72
PIM	42 (IA 140-157)	63-69, 64-66, 67-68, 70-72, 63-74, 74-106
PIM	43 (IA 160-177)	63-66, 66-69, 64-65, 67-68, 70-72, 63-106
MUX, DIM	70	65-66, 68-69, 71-72, 73-75, 76-78
Relay I/O	70	65-66, 68-69, 71-72,

95W0997

CHANGE CODE	SYM	DESCRIPTION	APPROVED	DATE
	A	PRODUCTION RELEASE PER EN 81738	[illegible]	3/1/73
	B	REVISED PER EN 81815	[illegible]	5/23/73
	C	REVISED PER EN 82360	[illegible]	8/23/73
	D	ADDED SIGNALS MRKX- & MRKX+ TO SHEET 2 PER EN 82526.	[illegible]	12/20/73
1	E	SHT 2 WAS ICLX-, 13-02. EN 82998	[illegible]	8-6-74
—	F	SHT 2 WAS FCYX+, 06-78, EN 83159-01	[illegible]	8-6-74

FOR PARTS LIST SEE 01P1035

[illegible]	3-5-73
[illegible]	3-6-73
[illegible]	—
[illegible]	3-6-73
APPD	
APPD	

THIS DOCUMENT MAY CONTAIN PROPRIETARY INFORMATION AND SUCH INFORMATION MAY NOT BE DISCLOSED TO OTHERS FOR ANY PURPOSE OR USED FOR ANY OTHER ARTICLE WITHOUT WRITTEN PERMISSION FROM VDM

varian data machines /a varian subsidiary
2722 michelson drive / irvine / california / 92664

TITLE

W/L - SYSTEMS COMPUTER

CODE IDENT NO.	SIZE	DWG NO.	REV
21101	A	95W0997	F

SCALE — | 620L-101-E2961A, B | SHEET 1 OF 2

SIGNAL NAME	FROM	TO	REMARKS
~~MGRX+~~	~~06-31~~	~~06-90~~	30 AWG WIRE F/N 57
H2XX+	11-108	06-26	
TPIX-I	15-38	06-33	
ICLX-	13-02	06-28	
~~L02X+~~	~~10-12~~	06-21	
~~L03X+~~	~~10-10~~	~~06-25~~	
~~L04X+~~	~~10-17~~	~~06-27~~	
~~L05X+~~	~~10-19~~	~~06-23~~	
L06X+	01-16	06-14	
L07X+	01-18	06-40	
L08X+	01-20	06-36	
L09X+	01-22	06-34	
L10X+	01-24	06-32	
L11X+	01-26	06-06	
L12X+	01-28	06-08	
L13X+	01-30	06-12	
L14X+	01-32	06-10	
MRKX-	11-071	06-071	
MRKX+	11-073	06-073	30 AWG WIRE F/N 57

WIRE LIST No. 001	By:	CODE IDENT 21101	WL 75W0737 REV F
varian data machines a varian subsidiary newport beach / california		SHEET 2 OF 2	DATE

96A0101-000A

DWG NO 98A0935

REVISIONS

SYM	DESCRIPTION	APPROVED	DATE
A	PRODUCTION RELEASE PER EN 81815	[illegible]	3/28/73

DR K. Ellinor	2/27/73
CHK	
DSGN	
ENGR [illegible]	3/28/73
APPD [illegible]	3/28/73
APPD	

THIS DOCUMENT MAY CONTAIN PROPRIETARY INFORMATION AND SUCH INFORMATION MAY NOT BE DISCLOSED TO OTHERS FOR ANY PURPOSE OR USED TO PRODUCE THE ARTICLE OR SUBJECT, WITHOUT WRITTEN PERMISSION FROM VDM

varian data machines /a varian subsidiary
2722 michelson drive / irvine / california / 92664

TITLE

ENGINEERING DESCRIPTION
BOOTSTRAP LOADER PROTECT
(E-2847)

CODE IDENT NO.	SIZE	DWG NO.	REV
21101	A	98A0935	A

SCALE

SHEET 1 OF 1

96A0153-000B

ENGINEERING DATA FORM

OPTION	Bootstrap Loader Protect
MODEL	
NO. OF LOGIC CARDS REQ'D.	Assembled on the memory timing and control
NO. OF CARD SLOTS REQ'D.	1
LOCATION OF SLOTS (NUMBERING)	CPU Card Slot 6
CONNECTORS REQ'D. (EXCLUDING I/O)	N/A
KEYING	
ST'D. DEVICE ADDRESS	N/A
WIRELIST NUMBER	N/A (PC Board)
MANUAL PUBLICATIONS NUMBER	This document
PERIPHERAL EQUIPT. REQ'D	For test only: BIC and paper tape system
MFG'R.	
MODEL	
GEN'L. SPECS	

NOTES:

Drawings:

Top Assembly	44P0671
Logic Diagram	91D0436
Bracket Assembly	04C0656

Software and test procedures are part of this drawing.

SECTION 1
GENERAL DESCRIPTION

The loader protect feature consists of additional logic located on the memory timing and control board plus additional backplane wiring to a switch. Drawing describes the modification procedure.

The purpose of the loader protect is to prevent writing into the last 400_8 locations of a selected 4K memory increment and locations 0 through 77_8 of the first 4K memory increment.

SECTION 2
FUNCTIONAL DESCRIPTION

The loader protect feature prevents writing into memory locations which are used by the bootstrap and binary load/dump routines. These locations are normally the last 400 octal addresses of the core memory. The loader protect circuitry is located on the timing and control card located in CPU card slot 6. The card contains jumper pads for the three most significant address terms (L12X+, L13X+, L14X+). Jumpers are installed at the factory or in the field when the system memory capacity exceeds 4K. Address may be adjusted to protect any memory increment from 4 to 32K.

NOTE: If no jumpers are installed, the last 400 octal locations of each 4K section is controlled by the loader protect circuitry. (See Table 1 for jumper configuration).

There is a switch mounted on the chassis inside the front panel that enables and disables the option.

There are no additional instructions or control terms for this option. All addresses for write type operation are compared for error. An error occurs whenever a write type operation is attempted in a protected area with the option enabled.

SECTION 3
THEORY OF OPERATION

All addresses being accessed in memory are checked by the loader protect option. When the address being accessed is equal to that of a protected address, and LPEX+ (loader protect enable from switch) is true, and H2XX+ (decode for a store instruction) is true, then the WRTX+ (write control to memory) is forced to ground. This causes the memory cycle to be a read/restore cycle.

After an error, the WRTX+ signal will be forced to ground causing a read cycle, and the computer will continue to cycle, changing all write cycles in a protected area. During a trap-in operation, the read/write command (WRTX+) and the memory start pulse (MSPX+) are forced to the low state and the CPU continues to cycle.

3.1 TRAP-IN OPERATION

When executing a trap-in request with the option enabled, if the memory address provided by the trapping device is in the protected area, the following events occur. The read/write command (WRTX+) and the memory start pulse (MSPX+) are forced to the low state.

3.2 LOADER PROTECT ENABLE/DISABLE SWITCH

A toggle switch located on the chassis inside the front panel is used to enable the loader protect circuitry. When the switch is in the disable position, all memory locations are available for storage. However, when the switch is in the enable position, the loader protect feature prevents writing into the memory locations X7400 through X7777 and locations 0 through 77_8.

*X = 4K core segment

3.3 ADDRESS SELECTION

Table 1 shows jumper placement on the memory timing and control board for address selection. Typically, the system memo will specify the proper jumpering.

TABLE 1

MEMORY SIZE	JUMPERS REQ.		
	A-A	B-B	C-C
4K	No	No	No
8K	No	No	Yes
12K	No	Yes	No
16K	No	Yes	Yes
20K	Yes	No	No
24K	Yes	No	Yes
28K	Yes	Yes	No
32K	Yes	Yes	Yes

A-A, B-B and C-C are jumper pads for the three most significant address terms and are located on the memory timing control board.

SECTION 4
MNEMONIC LIST

H2XX+	Store instruction decode
ICLX-	Inhibit clock
L02X+ through L14X+	Memory address register lines
LPEX+	Loader protect enable from switch
MSPX+	Memory start pulse
TPIX-I	Trap-in
WRTX+	Read/write command

SECTION 5
TEST DESCRIPTION

5.1 PROGRAM MODE TEST

Using Aid II program with loader protect disabled write a fixed data pattern in locations 0 through 77 and X7400 through X7777.

i.e.
I 0 , 77, 177777,.
I X7400, X7777, 177777,.

X = 0-7 for
4 → 32K
I^E 4K = 0
8K = 1

Enable loader protect then write a different fixed pattern in locations 0 through 77 and locations X7400 through X7777.

i.e.
I 0 , 77, 0.

I X7400, X777,0,.

Now verify that the original pattern did not get altered by reading locations 0 77 and X7400 X7777 and comparing it with the original pattern by using the search function of Aid II program.

i.e.
S 0, 77, 177777, N
S X7400, X7777, 177777, N

If any errors occurred, they will be listed as follows: There should be no errors.

i.e.
Address Contents
000043 (000000)

5.2 TRAP-IN TEST

Using the Aid II program load the following program into core starting at location 100.

```
100     100021      Initialize BIC
101     006010      LDAI
102     0
103     006020      LDBI
104     -77
105     101537      Sen Buff Ready
106     000111
107     001000      JMP
110     000105
111     103120      OAR BIC Initial Reg.
112     103221      OBR BIC Final Reg.
113     100020      Activate BIC
114     100537      Start Reader
115     005000      NOP
116     101020      Sen BIC Not Busy
117     000122
120     001000      JMP
121     000115
122     100021      Initialize BIC
123     006010      LDAI
124     0X7400
125     006020      LDBI
126     0X7777
127     101537      Sen Buff Ready
130     000133
131     001000
132     000127
133     103120      OAR BIC Initial Reg.
134     103221      OBR BIC Final Reg.
135     100020      Activate BIC
136     100537      Start Reader
137     005000      NOP
140     101020      Sen BIC Not Busy
141     0X6000
142     001000      JMP
143     000137
```

Place a test tape in the reader, [redacted] then run the program starting at location 100. When it is complete, it will return to the Aid II program.

Verify that none of the protected locations of core get altered by using the search function of the Aid II program.

i.e.
S 0 , 77, 177777, N
S X7400, X7777, 177777, N

Any errors will be listed as in previous test. There should be no errors.

varian data machines
a varian subsidiary

Log No. ____
Page of 1

Test Date 11-21-74
P.O. No. ____
Pkg Slip No. ____
Quantity ____
Account No. ____

TEST REPORT

Part or Material 620/L-100 E-2861E
Manufacturer VDM
Ser. No. 001
74075 VARIAN INSTRUMENT DIV.

TEST REQUIREMENTS:

Test Category: Rec. ☐ Mfg. ☒ Other ____
Perf. Spec.: Enclosed ☐ Reference ____

TEST RESULTS:

ACCEPT ☒ REJECT ☐

Did ☒ Did Not ☐ Meet Manufacturers or applicable purchase specs.

Comments: 620/L-100 E-2861E WITH 16K MEMORY, HMD, DER, DMA, SPECIAL E2347 BOOTSTRAP PROJECT, SPECIAL POWER SUPPLY CABLES AND FRONT PANEL TERMINATION BOARD.

Disposition: ____

CONDUCTED BY:

1. Signed Pat Pierce
   Date 11/21/74 Stamp ____
2. Signed ____
   Date ____ Stamp ____
3. Signed ____
   Date ____ Stamp ____

APPROVAL:

A. Signed R. Kraus
   Title Supervisor
   Date 11-21-74 Stamp ____
B. Signed ____
   Title ____
   Date ____ Stamp ____

TEST DATA SHEET

620/L-100 and 620/L-XX

S.O. 74075 S/N _____ DATE _____

J.O. _____ TECH _____

Test Procedure 98A0864

Para.	Test Description		Req. Parameter	Actual	Stamp		
4.0	Static power check		No shorts or opens		T120	T120	T16
5.0	Power supply and distribution check		All voltages present lights on - fan on		T120	T120	T16
6.2.1	I/O regulator voltage check		+3.5V ±5% connector 10, pin 49	3.47	T120	T120	T16
6.3	Master clock Frequency	L-100	4.21 MHZ ± 0.1%		T120	T120	T16
		L-XX	2.20 MHZ ± 0.1%				
6.4	Master clock pulse range		from 42 to 62 Nsec set @ 52 ± 2 Nsec	52 NS	T120	T120	T16
6.5	Phase clock	L-100	237.5 Nsec ± 1%	237	T120	T120	T16
		L-XX	454.5 Nsec ± 1%				
7.1	Verify register bit lights		All registers operate Set and Clear		T120	T120	T16
7.2	Verify overflow light		Overflow set and reset		T120	T120	T16
7.3 to 7.7	Verify switches		Signal transition		T120	T120	T16
7.8	Verify console disable		All switches disabled		T120	T120	T16
8.0	Prelim. test load/dump		No failures		T120	T120	T16
9.1	Instructions test Part 1		No failures		T120	T120	T16

TEST DATA SHEET

Para.	Test Description	Required Paramtr.	Actual	Stamp		
9.2	Instruction test Part 2	No failures		T120	T120	T16
9.2.10	Master Clock Margins	44Nsec to 60 Nsec		T120	T120	T16
10.0	Factory Memory Test Part 1 and 2	No failures		T120	T120	T121
10.25	Memory Rotate	No failures		T120	T120	T121
10.26	Memory Rotate	No failures				
11.0	Memory Expansion	No failures		T120	T120	T121
12.1	Instruction Margins	±5% of +5V		T120	T120	T1
12.2	Memory Margins	±8% of ± 12V		T120	T120	T121
13.0	AMED	T.P. 98A0839				
14.0	Teletype and controller	See T.P. 98A0848				
15.4.1	Basic interrupt program	No interrupts		T101	T120	T19
15.12	Measure IUCX-1 L-100 L-XX	475 Nsec ± 1% 909 Nsec ± 1%		T101	T120	T19
15.15.2	Check IUJX-I & IUAX-1	Timing requirement satisfied		T101	T120	T19
16.0	Dynamic interrupt test	Exec dump S/B interrupted		T101	T120	T19
17.2	I/O transfer test	No failures		T101	T120	T19

TEST DATA SHEET

Para.	Test Description	Required Paramtr.	Actual	Stamp		
17.3	Sense test	No failures		T101	T120	T19
17.4	Device address test	No failures		T101	T120	T19
17.5	External control test	No failures		T101	T120	T19
17.6	DMA test	No failures		T101	T120	T19
18.0	I/O Expansion	No failures				
19.0	Memory wrap around	Table 3		T101	T120	T121
20.0	Power fail/restart	T.P. 98A0843		T101	T120	T19
21.0	Real time clock	T.P. 98A0844		T101	T120	T19
22.0	Priority interrupt module	T.P. 98A0306				
23.0	Vibration and shock	No failures		T101	T120	T121
24.0	Master Operating System	T.P. 98A1001				T19
25.0	Environmental					
	LOADER PROTECT FRONT PANEL ADAPTER			T101 T101	T120 T120	T19

varian data machines /a varian subsidiary
2722 michelson drive / irvine / california / 92664 / (714) 833-2400

PARTS LIST FOR 620/L AND 620/L-100 CIRCUIT CARDS

The following is a composite parts list for the 620/L and 620/L-100. It is divided into three sections. Section 1 contains the standard circuit cards, section 2 the power supply, and section 3 the controller cards. The parts for each circuit card are listed in numerical order according to Varian part numbers. The reference designations in the parts list also appear on the assembly drawings and logic diagrams.

Card P/N and Name	Varian P/N	Manufacturer and P/N	Reference Designation
1. STANDARD LOGIC CARDS			
44P0172 * Priority Interrupt Module	49A0002-000	Tex Inst SN7473N	IC 16,33,39,44,49
	49A0004-000	Tex Inst SN7440N	IC 41
	49A0007-000	Tex Inst SN7400N	IC 23,24
	49A0008-000	Tex Inst SN15846N	IC 6,10,12,18,19,25,26, 30,32,38,43,45,46,48,50
	49A0010-000	Fairchild SL18162	IC 4,5,11,28,29,36
	49A0011-000	Tex Inst SN15830N	IC 1,7,13,17,20,21,27,35,51
	49A0012-000	Tex Inst SN7474N	IC 2,3,9,15,31,37,42,47
	49A0014-000	Tex Inst SN15850N	IC 22,34
	49A0016-000	Tex Inst SN15833N	IC 8,14,40
44P0185 Power Failure/ Restart and Real-Time Clock	49A0002-000	Tex Inst SN7473N	IC 3,13,19,20,26,27,33
	49A0004-000	Tex Inst SN7440N	IC 22,23,32
	49A0007-000	Tex Inst SN7400N	IC 8,9,12,31
	49A0008-000	Tex Inst SN15846N	IC 1,2,4,5,6,11,21,24,25, 34,35,36,37,39,40,41
	49A0010-000	Fairchild SL18162	IC 14,15,16,17,18,28,30,42
	49A0011-000	Tex Inst SN15830N	IC 7,10
	49A0518-000	Motorola MC851L	IC 29,38
	76A2369-000	2N2369	Q 3,5,6,8,9,10,11,15,16,17,1
	76A3009-000	2N3009	Q 12,19
	76A4034-000	2N4034	Q 1,2,4,7,13,14
	76N4916-000	Fairchild 2N4916	Q 1,2,4,7,13,14
	76S1002-000	Motorola 2N3019	Q 20
	76S1046-000	Fairchild 2N3646	Q 12,19
	77N0753-000	IN753	CR 3,10
	77S1017-000	Fairchild EDN400	CR 1,2,4,5,6,7,9

* See page 6 for another version of Priority Interrupt Module.

Card P/N and Name	Varian P/N	Manufacturer and P/N	Reference Designation
44P0506 Sense/Inhibit	48A0002-001	Varian	A 101,201,401,501,701, 801,1001,1101
	48A0003-001	Varian	A 303,603,903,1203
	49A0022-000	Tex Inst SN74H11N	IC 4,5,7,9,10,12
	49A0032-000	Tex Inst SN7402N	IC 2
	49A0042-000	Tex Inst SN74H01N	IC 1,3,6,8,11
	49A0080-000	Tex Inst SN7524N	IC 101,201,401,501,701, 801,1001,1101
	49A0119-000	Motorola MHQ5859	A 302,602,902,1202
	76A2369-000	2N2369	Q 301 through 304, 601 through 604, 901 through 904, 1201 through 1204
	77S1017-000	Fairchild EDN400	CR 101,102,103,104 through 904,1201,1202,1203,1204, 305,605,905,1205
44P0515 Display Board	49A0004-000	Tex Inst SN7440N	IC 15
	49A0040-000	Tex Inst SN7404N	IC 3,7,11,13
	49A0110-000	Tex Inst SN75451BP	IC 1,2,4,5,6,8,9,10,12,14
44P0521 Memory Buffer	49A0023-000	Tex Inst SN74H04N	IC 2,4,7
	49A0025-000	Varian	A 1,2
	49A0042-000	Tex Inst SN74H01N	IC 1,3,5,6,8
	49A0124-000	Tex Inst SN7407N	IC 13,14,15
	49A0125-000	Tex Inst SN7408N	IC 9,10,11,12
44P0578 Driver/Sink Switch	49A0032-000	Tex Inst SN7402N	IC 1,3
	49A0041-000	Tex Inst SN74H51N	IC 4,7,8
	49A0044-000	Tex Inst SN7442N	IC 2,5,9,11
	49A0118-000	Tex Inst SN7427N	IC 6,10
	49A0119-000	Motorola MHQ5859	A 102,104,202,204,302,304,402 404,502,504,602,604,702,704 802,804
	76A0002-000	2N3725A	Q 25
	76A2369-000	2N2369	Q 1,2,5,9,12,13,14,17,18
	76A2904-000	2N2904	Q 23
	76A2907-000	Motorola 2N2907	Q 3,4,6,7,8,10,11,15,16,19,20
	76N3640-000	2N3640	Q 21,24
	76S1046-000	Fairchild 2N3646	Q 22,26
	77N0751-000	Tex Inst IN751A	CR 7,10,11,12,13,14
	77S1017-000	Fairchild EDN400	CR 1 through 6,8,9,15, 101 through 116, 201 through 216, 301 through 316, 401 through 416, 501 through 524, 601 through 624, 701 through 724, 801 through 824

Card P/N and Name	Varian P/N	Manufacturer and P/N	Reference Designation
44P0592 Register Card	49A0000-000	Tex Inst SN7475N	IC 9,21,33
	49A0007-000	Tex Inst SN7400N	IC 13,24
	49A0010-000	Fairchild SL18162	IC 2,6,7
	49A0012-000	Tex Inst SN7474N	IC 4,8,14
	49A0023-000	Tex Inst SN74H04N	IC 12,18,41
	49A0040-000	Tex Inst SN7404N	IC 1
	49A0095-000	Tex Inst SN74H52N	IC 15
	49A0096-000	Tex Inst SN74181N	IC 19,25
	49A0102-000	Tex Inst SN74182N	IC 3
	49A0104-000	Motorola MC3001P	IC 26
	49A0106-000	Tex Inst SN74H53N	IC 5,10,11,16,17,22,23,27, 28,29,30,31,32,34,35,40, 42,43,44
	49A0141-000	Tex Inst SN74174N	IC 36,37,38,39
	49A0554-001	Tex Inst SN74H10N	IC 20
	77S1011-000	Varian	CR 1 through 6
44P0593 Processor Control Number 4	49A0000-000	Tex Inst SN7475N	IC 40
	49A0002-000	Tex Inst SN7473N	IC 4,18,19,43
	49A0004-000	Tex Inst SN7440N	IC 2
	49A0005-000	Tex Inst SN7410N	IC 10,13,44
	49A0006-000	Tex Inst SN7420N	IC 21
	49A0007-000	Tex Inst SN7400N	IC 5,12,42
	49A0010-000	Fairchild SL18162	IC 1,29
	49A0019-000	Tex Inst SN74H40N	IC 6,7,32
	49A0020-000	Tex Inst SN74H72N	IC 8
	49A0023-000	Tex Inst SN74H04N	IC 14,17,22
	49A0025-000	Varian	A 1,2
	49A0036-000	Tex Inst SN74H73N	IC 28
	49A0038-000	Tex Inst SN74H22N	IC 15
	49A0039-000	Tex Inst SN74H00N	IC 9,39,41,45
	49A0042-000	Tex Inst SN74H01N	IC 3,27
	49A0056-000	Tex Inst SN74H20N	IC 31,33,38
	49A0077-000	Tex Inst SN74H60N	IC 24
	49A0104-000	Motorola MC3001P	IC 16,25
	49A0106-000	Tex Inst SN74H53N	IC 26
	49A0127-000	Tex Inst SN74161N	IC 23
	49A0138-000	Tex Inst SN7437N	IC 11,30,37
	49A0146-000	Tex Inst SN74122N	IC 46
	49A0554-001	Tex Inst SN74H10N	IC 20,34,35,36

Card P/N and Name	Varian P/N	Manufacturer and P/N	Reference Designation
44P0594 Multiply/ Divide, Extended Address	49A0000-000	Tex Inst SN7475N	IC 16
	49A0002-000	Tex Inst SN7473N	IC 2,29
	49A0006-000	Tex Inst SN7420N	IC 27
	49A0007-000	Tex Inst SN7400N	IC 21,22
	49A0008-000	Tex Inst SN15846N	IC 6,8,9,24,25
	49A0009-000	Tex Inst SN15862N	IC 19
	49A0010-000	Fairchild SL18162	IC 7
	49A0011-000	Tex Inst SN15830N	IC 10,14,28
	49A0036-000	Tex Inst SN74H73N	IC 15
	49A0038-000	Tex Inst SN74H22N	IC 1,4,5,13,18
	49A0039-000	Tex Inst SN74H00N	IC 17,32
	49A0042-000	Tex Inst SN74H01N	IC 3,20
	49A0128-001	Tex Inst SN7438N	IC 11,12,26,30,31
	49A0142-000	Tex Inst SN7412N	IC 23
44P0595 Processor Control Number 1	49A0000-000	Tex Inst SN7475N	IC 18,19,26,27
	49A0002-000	Tex Inst SN7473N	IC 1,4,8,34
	49A0004-000	Tex Inst SN7440N	IC 37
	49A0005-000	Tex Inst SN7410N	IC 36
	49A0007-000	Tex Inst SN7400N	IC 7,10
	49A0008-000	Tex Inst SN15846N	IC 2,5,12,13,15,16,20,24, 25,28,29,30,31,33
	49A0009-000	Tex Inst SN15862N	IC 11
	49A0011-000	Tex Inst SN15830N	IC 3,6
	49A0019-000	Tex Inst SN74H40N	IC 32
	49A0021-000	Tex Inst SN7401N	IC 14,21,22,23
	49A0039-000	Tex Inst SN74H00N	IC 9
	49A0042-000	Tex Inst SN74H01N	IC 17
	76N3055-000	2N3055	Q 1
	77N4730-000	IN4730A	CR 1
	77S1011-000	Varian	CR 2
44P0596 Processor Control Number 2	49A0000-000	Tex Inst SN7475N	IC 41
	49A0002-000	Tex Inst SN7473N	IC 9,20,27
	49A0004-000	Tex Inst SN7440N	IC 18,40,43
	49A0005-000	Tex Inst SN7410N	IC 10,11,30,48
	49A0006-000	Tex Inst SN7420N	IC 22,23,26,28,34
	49A0007-000	Tex Inst SN7400N	IC 4,5,7,12,19,37
	49A0008-000	Tex Inst SN15846N	IC 15,17,31,42
	49A0009-000	Tex Inst SN15862N	IC 1,6,29
	49A0010-000	Fairchild SL18162	IC 13,24,47
	49A0011-000	Tex Inst SN15830N	IC 3,21,25
	49A0019-000	Tex Inst SN74H40N	IC 32
	49A0038-000	Tex Inst SN74H22N	IC 8,14,38
	49A0039-000	Tex Inst SN74H00N	IC 36
	49A0042-000	Tex Inst SN74H01N	IC 2,16,35,39,45
	49A0056-000	Tex Inst SN74H20N	IC 33
	77S1011-000	Varian	CR 1

Card P/N and Name	Varian P/N	Manufacturer and P/N	Reference Designation
44P0597 Processor Control Number 3	49A0002-000	Tex Inst SN7473N	IC 2,12
	49A0004-000	Tex Inst SN7440N	IC 1,5,9,15,18,20,24,29
	49A0005-000	Tex Inst SN7410N	IC 4
	49A0006-000	Tex Inst SN7420N	IC 10,14,43
	49A0007-000	Tex Inst SN7400N	IC 13,42
	49A0008-000	Tex Inst SN15846N	IC 11,23,27,28,32,33
	49A0009-000	Tex Inst SN15862N	IC 6,31
	49A0019-000	Tex Inst SN74H40N	IC 26,34,41
	49A0038-000	Tex Inst SN74H22N	IC 37
	49A0039-000	Tex Inst SN74H00N	IC 19,38
	49A0042-000	Tex Inst SN74H01N	IC 7,16,21,22,30,36,39
	49A0128-001	Tex Inst SN7438N	IC 3,8
	49A0142-000	Tex Inst SN7412N	IC 25,35,40
	49A0554-000	Tex Inst SN74H10N	IC 17,44
	77S1011-000	Varian	CR 1,2
44P0598 Interrupt Trap	49A0002-000	Tex Inst SN7473N	IC 1,9
	49A0004-000	Tex Inst SN7440N	IC 24,28,32
	49A0005-000	Tex Inst SN7410N	IC 40
	49A0007-000	Tex Inst SN7400N	IC 10,15
	49A0008-000	Tex Inst SN15846N	IC 3,6,12,14,16,20,23,27, 35,37,38
	49A0010-000	Fairchild SL18162	IC 2,8
	49A0011-000	Tex Inst SN15830N	IC 36
	49A0021-000	Tex Inst SN7401N	IC 39
	49A0036-000	Tex Inst SN74H73N	IC 19
	49A0038-000	Tex Inst SN74H22N	IC 7
	49A0039-000	Tex Inst SN74H00N	IC 18,22,26,30,31,34
	49A0042-000	Tex Inst SN74H01N	IC 13,17,21,25,29,33
	49A0056-000	Tex Inst SN74H20N	IC 4,11
	49A0142-000	Tex Inst SN7412N	IC 5
	77S1011-000	Varian	CR 1,2
44P0599 Memory Timing and Control	49A0003-000	Tex Inst SN7472N	IC 9
	49A0019-000	Tex Inst SN74H40N	IC 17
	49A0023-000	Tex Inst SN74H04N	IC 7,13
	49A0039-000	Tex Inst SN74H00N	IC 6,11
	49A0041-000	Tex Inst SN74H51N	IC 16
	49A0056-000	Tex Inst SN74H20N	IC 12
	49A0079-000	Tex Inst SN74H54N	IC 8,15
	49A0146-000	Tex Inst SN74122N	IC 14
	49A0554-001	Tex Inst SN74H10N	IC 10
	77S1017-000	Fairchild EDN400	CR 1

Card P/N and Name	Varian P/N	Manufacturer and P/N	Reference Designation
44P0640 Memory Timing and Control	49A0003-000	Tex Inst SN7472N	IC 9
	49A0019-000	Tex Inst SN74H40N	IC 17
	49A0023-000	Tex Inst SN74H04N	IC 7,13
	49A0039-000	Tex Inst SN74H00N	IC 6,11
	49A0041-000	Tex Inst SN74H51N	IC 16
	49A0056-000	Tex Inst SN74H20N	IC 12
	49A0079-000	Tex Inst SN74H54N	IC 8,15
	49A0146-000	Tex Inst SN74122N	IC 14
	49A0554-001	Tex Inst SN74H10N	IC 10
	77S1017-000	Fairchild EDN400	CR 1
44P0683 Priority Interrupt Module	49A0002-000	Tex Inst SN7473N	C 6,7; D 6,7
	49A0012-000	Tex Inst SN7474N	B 3; C 2,3,4
	49A0022-000	Tex Inst SN74H11N	D 4
	49A0023-000	Tex Inst SN74H04N	C 1; E 3
	49A0036-000	Tex Inst SN74H73N	F 2
	49A0039-000	Tex Inst SN74H00N	E 1,6,7; F 3
	49A0040-000	Tex Inst SN7404N	A 1; B 1,2,3; E 5
	49A0056-000	Tex Inst SN74H20N	A 4,5; C 5; D 1,5
	49A0082-001	Tex Inst SN74H74N	A 6,7; B 6,7; F 1
	49A0093-001	Tex Inst SN74H50N	D 2
	49A0094-001	Tex Inst SN74H21N	E 4
	49A0104-000	Motorola MC3001P	D 3; F 6,7
	49A0128-001	Tex Inst SN7438N	A 2,3
	49A0138-000	Tex Inst SN7437N	E 2
	49A0554-001	Tex Inst SN74H10N	B 4

Card P/N and Name	Varian P/N	Manufacturer and P/N	Reference Designation
2. POWER SUPPLY			
44P0518 Heat Sink Board	76N3055-000	2N3005	Q 1,2
44P0526 Power Supply Board	76A0009-002	Motorola MR751	CR 5,6,7,8,9,10,11,13
	77N4001-004	IN4005	CR 15,16
	77N4003-000	IN4003	CR 12,14
	82A0030-001	Potter Brumfield KUP14AE6-115 VAC	K 1
44P0528 Regulator Board	49A0103-001	Fairchild U5R7723393	IC 1,2,3,4
	76A0007-000	2N3054	Q 1,2,3,5
	76A2904-000	2N2904	Q 4
	77A0004-000	IN746A	CR 6
	77N0751-000	Tex Inst IN751A	CR 3
	77N4003-000	IN4003	CR 4,5
83P0035 Power Supply	76A0008-000	Motorola MR1121	CR 1,2,3,4
	77A0005-000	Motorola MCR3935-2	Q 1
3. CONTROLLER CARDS			
44P0013 Teletype Controller	49A0002-000	Tex Inst SN7473N	IC 6,10,11,22,23,27,28, 30,31,36,41
	49A0004-000	Tex Inst SN7440N	IC 25,40
	49A0007-000	Tex Inst SN7400N	IC 2,3,42
	49A0008-000	Tex Inst SN15846N	IC 1,4,13,14,15,17,19,20, 24,29,34,35,37,43
	49A0009-000	Tex Inst SN15862N	IC 5,38
	49A0010-000	Fairchild SL18162	IC 7,8,9,12,21,39,44
	49A0012-000	Tex Inst SN7474N	IC 16,18,26,32,33
	76A2369-000	2N2369	Q 1 through 4
	76S1072-000	Varian	Q 1 through 4
	77S1017-000	Fairchild EDN400	CR 1 through 10
	82A0006-000	Aztec 20229	K 2
	82A0006-003	Aztec 20213	K 1

Card P/N and Name	Varian P/N	Manufacturer and P/N	Reference Designation
44P0026 Buffer Interlace Controller	49A0000-000	Tex Inst SN7475N	IC 14,28,42,56
	49A0002-000	Tex Inst SN7473N	IC 57
	49A0004-000	Tex Inst SN7440N	IC 15,17,37
	49A0005-000	Tex Inst SN7410N	IC 31
	49A0007-000	Tex Inst SN7400N	IC 4,5,16,38
	49A0008-000	Tex Inst SN15846N	IC 2,6,7,13,20,21,23,27,34, 35,41,43,48,49,55,62,63
	49A0010-000	Fairchild SL18162	IC 1,18,19,29,32,33,46,47, 50,51,58,60,61
	49A0011-000	Tex Inst SN15830N	IC 3
	49A0012-000	Tex Inst SN7474N	IC 11,12,25,26,39,40,53,54
	49A0014-000	Tex Inst SN15850N	IC 8,9,10,22,24,30,36,44, 45,52,59
44P0689 Buffer Interlace Controller	49A0000-000	Tex Inst SN7475N	A 7; B 7; C 7; D 7
	49A0002-000	Tex Inst SN7473N	E 6; F 2; K 4
	49A0012-000	Tex Inst SN7474N	F 6; H 7; K 3
	49A0022-000	Tex Inst SN74H11N	E 4; H 2
	49A0023-000	Tex Inst SN74H04N	A 4; C 4; D 5; E 5; K 5
	49A0039-000	Tex Inst SN74H00N	K 5
	49A0040-000	Tex Inst SN7404N	A 1; B 1; C 1; D 3
	49A0042-000	Tex Inst SN74H01N	A 6; B 6; C 6; D 6
	49A0082-001	Tex Inst SN74H74N	E 2
	49A0093-001	Tex Inst SN74H50N	E 3; F 5,7
	49A0094-001	Tex Inst SN74H21N	H 3
	49A0104-000	Motorola MC3001P	F 1,4; H 6; K 6
	49A0127-000	Tex Inst SN74161N	A 3; B 3; D 4
	49A0128-001	Tex Inst SN7438N	A 2; B 2; C 2; D 1,2; E 1; H
	49A0178-000	Tex Inst SN74175N	H 1
	49A0554-001	Tex Inst SN74H10N	F 3
44P0176 Paper Tape Controller	49A0000-000	Tex Inst SN7475N	IC 8,14
	49A0002-000	Tex Inst SN7473N	IC 52
	49A0004-000	Tex Inst SN7440N	IC 16,25,31,37,40,42, 45,48,51,55
	49A0008-000	Tex Inst SN15846N	IC 1,6,7,10,12,13,15, 18,19,24,27,29,30, 34,36,38,47,49,50,57
	49A0009-000	Tex Inst SN15862N	IC 21,41,53
	49A0010-000	Fairchild SL18162	IC 5,11,17,23,26,32,43
	49A0011-000	Tex Inst SN15830N	IC 35
	49A0014-000	Tex Inst SN15850N	IC 4,28,33,39,44
	49A0018-000	Tex Inst SN15851N	IC 22
	49A0042-000	Tex Inst SN74H01N	IC 2,3,9,20
	49A0146-000	Tex Inst SN74122N	IC 46,56
44P0601 Bootstrap Loader	49A0007-000	Tex Inst SN7400N	IC 2
	49A0039-000	Tex Inst SN74H00N	IC 18
	49A0508-000	Tex Inst SN15846J	IC 4
	49A0510-000	Fairchild SL13016	IC 1,5
	49A0516-000	Motorola MC833L	IC 3

REVISIONS				
DASH	ZONE	DESCRIPTION	APPROVED	DATE
		SEE SHEET 1		

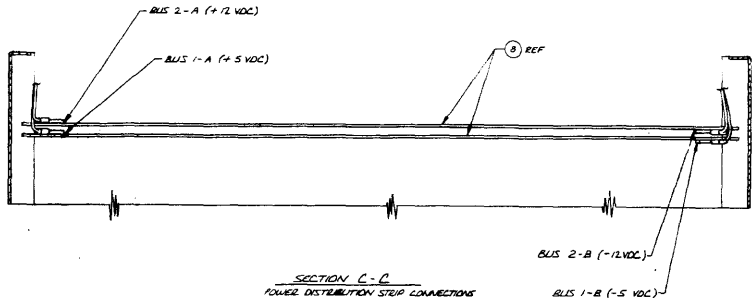

SECTION C-C
POWER DISTRIBUTION STRIP CONNECTIONS

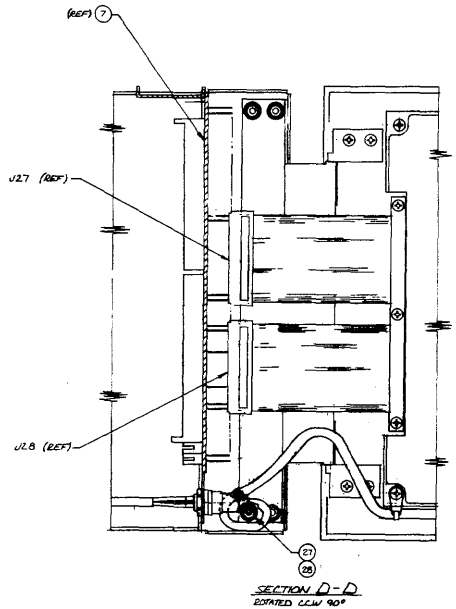

SECTION D-D
ROTATED C.C.W 90°

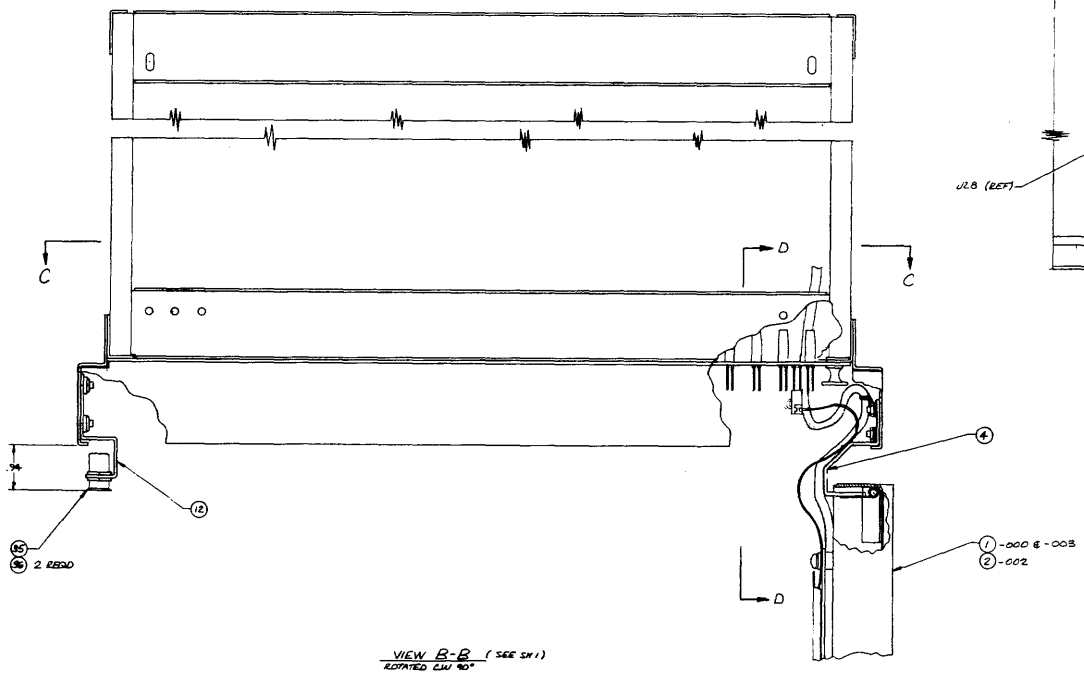

VIEW B-B (SEE SH 1)
ROTATED C.W 90°

01E1035 J

NOTE: UNLESS OTHERWISE SPECIFIED

CODE IDENT NO.	SIZE	DWG NO	REV
21101	E	01E1035	J
SCALE 1/1		SHEET 2 OF 2	

WIRE LIST		
FROM	TO	COLOR
J31-1	J17-113	PURPLE
J31-2	J17-112	GREEN
J31-3	J17-114	YELLOW

REVISIONS				
SYM	ZONE	DESCRIPTION	APPROVED	DATE
A		PRODUCTION RELEASE PER EN [illegible]	[illegible]	[illegible]
B	J2	REVISED PER EN [illegible]	[illegible]	[illegible]
C	SM	ADDED CABLE CLAMP AND SERVICE LOOP PER E-N 5584	[illegible]	[illegible]
D	SM	ZONE D2 REVISED VIEW OF WIRING ADDED FIN 21 CALLOUT - DETAILED VIEW E-E ZONE B3 PER EN 80104	[illegible]	[illegible]
E		REVISED PER EN [illegible]	[illegible]	[illegible]
—		REVISED PER EN [illegible]	[illegible]	[illegible]
F		REVISED PER EN 80495	[illegible]	[illegible]
—	GRL	ADDED [illegible] PER EN 81072	[illegible]	[illegible]
G	GRL	ADDED -004 VERSION AND REVISED CABLE ROUTING IN VIEW B-B PER EN 81531	[illegible]	[illegible]
H	[illegible]	REVISED PER EN [illegible]	[illegible]	[illegible]

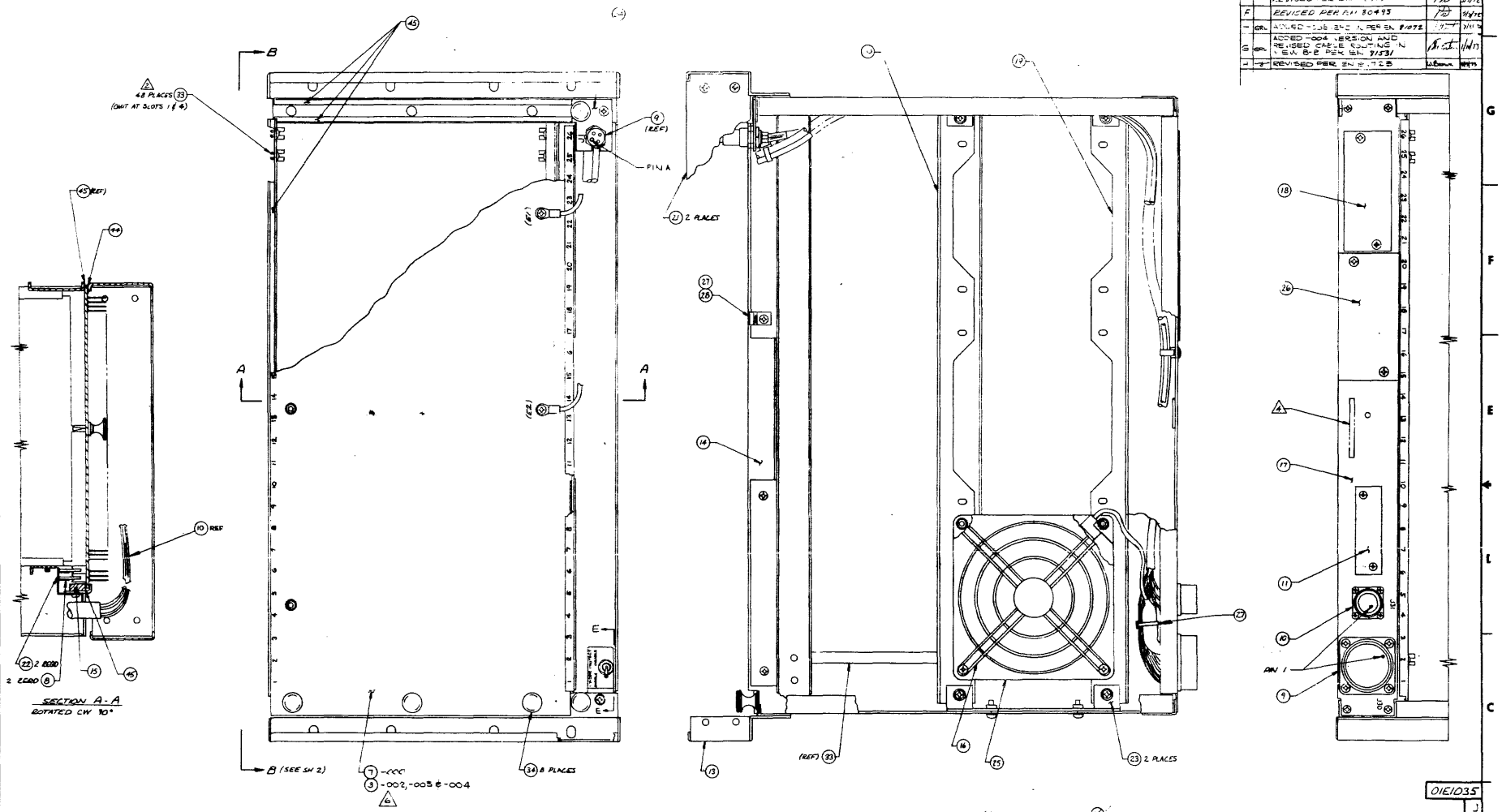

01E1035

NOTE: FRONT PANEL ASSY OMITTED FROM THIS SHEET FOR CLARITY. SEE SHEET 2 FOR INSTALLATION OF FRONT PANEL ASSY

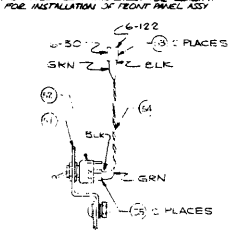

VIEW E-E
01P1035-004

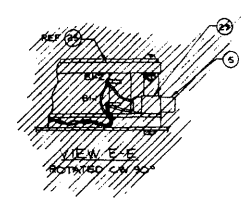

VIEW E-E
ROTATED CW 90°

TABULATION BLOCK		
VDM PART NO.	DESCRIPTION	NEXT ASSY
01P1035-000	FRAME ASSY, 16 BIT	01C1234 & 01A1234
~~01E1035-001~~	~~FRAME ASSY, 16 BIT~~	
01P1035-002	FRAME ASSY 16 BIT	01A1277
01P1035-003	FRAME ASSY 16 BIT	01A1277
01P1035-004	FRAME ASSY 16 BIT WITHOUT FRONT PANEL	01P1497

FOR PARTS LIST, SEE 01P1035

6 MODIFY F/N 3 WIRING FOR 01P1035-004 VERSION ONLY PER WIRE LIST 95W0985 USING F/N 56.

~~6 CABLE CLAMP (FIND NO 5) TO BE INSTALLED ON WIRE WITH PLAT SIDE UP (OPPOSITE TO MANNER IN WHICH INSTALLED ON FRONT PANEL DISPLAY BOARD)~~

4 MARK PART NO. 01P1035-(APPROPRIATE) AND REV LTR OF THE PARTS LIST TO WHICH THE PART WAS MANUFACTURED APPROX WHERE SHOWN. IDENTIFICATION TO BE 12 HIGH CHARACTERS & PERMANENT.

3 TERMINATE J17 END OF WIRE WITH ITEM 32. COVER WITH ITEM 42 APPROX .75 LONG AFTER INSTALLATION TO CONNECTOR PLATE.

2 INSTALL CARDGUIDES (ITEM 33) TO MATCH CONNECTORS ON CONNECTOR PLATE (ITEM 7) PRIOR TO INSTALLATION OF CONNECTOR PLATE.

1. USE HARDWARE IN ACCORDANCE WITH 98A0536

NOTE: UNLESS OTHERWISE SPECIFIED

MODEL NO. G20L / G20L-100	DIMENSIONS ARE IN INCHES AND AFTER FINISHING	DR KLUSSIS	11/16/70
NEXT ASSY 01A1234 01A1277	TOLERANCES UNLESS OTHERWISE SPECIFIED	CHK [illegible]	11/21/70
MATERIAL	X = ±1 XX = .25 XXX = .005 ANGLES = ±3°	DSGN KLUSSIS	11/16/70
		ENGR [illegible]	[illegible]
FINISH	BREAK ALL SHARP EDGES .005 R APPROX	APPD [illegible]	[illegible]
	DO NOT SCALE DRAWING	APPD [illegible]	[illegible]

THIS DOCUMENT MAY CONTAIN PROPRIETARY INFORMATION AND SUCH INFORMATION MAY NOT BE DISCLOSED TO OTHERS FOR ANY PURPOSE OR USED TO PRODUCE THE ARTICLE OR SUBJECT WITHOUT WRITTEN PERMISSION FROM VDM

varian data machines / a varian subsidiary
[illegible] / [illegible] / [illegible]

TITLE: FRAME ASSEMBLY

CODE IDENT NO.	SIZE	DWG NO	REV
21101	E	01E1035	J

SCALE 1/1 — SHEET 1 OF 2

WIRE LIST			
FROM	TO	FIND NO.	COLOR
E5	2-1	15	WHT
E6	2-3	15	WHT
E3	1-2	15	WHT
1-3	1-2	15	WHT
E2	P1-A	17	RED
E4	P1-C	17	BRN
E8	P1-D	17	ORG
E7	2-2	15	WHT
E1	1-1	15	WHT

REVISIONS				
SYM	ZONE	DESCRIPTION	APPROVED	DATE
A		PRODUCTION RELEASE PER EN 5344		1/13/71
—	JM	ADDED TO WIRE LIST PER EN 5550	WJO	4/26/71
B	JM	8.50±.25 WAS 4.75±.25 PER EN 5584	WJO	4/26/71
C	dm	ADDED FIND NO. 20 TO FID ZONE C7 PER EN 80184		11/4/71

01D1036 C

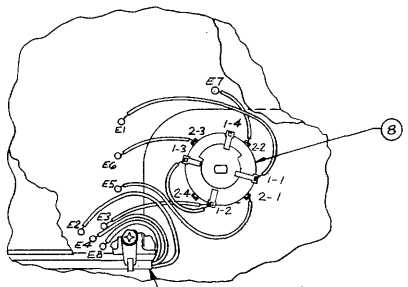

DETAIL A SCALE: 1/1

6 2 PLACES

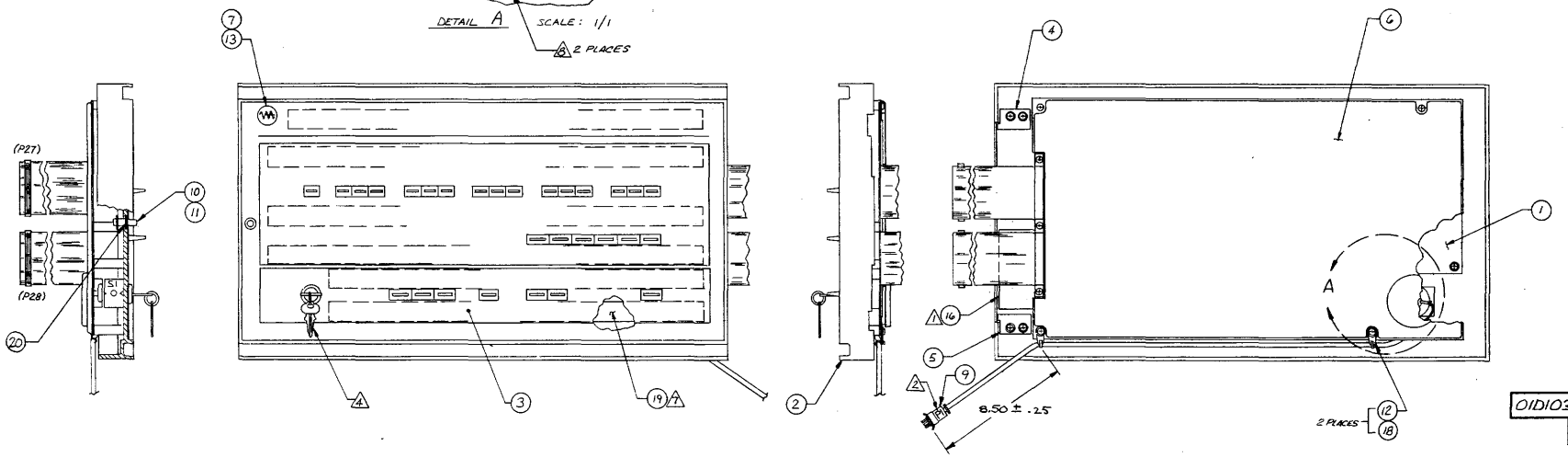

01D1036 C

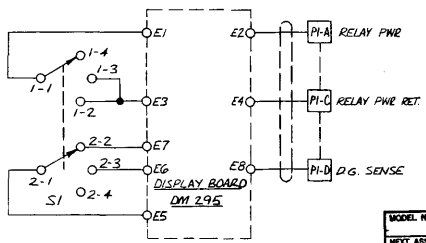

SCHEMATIC

FOR PARTS LIST SEE 01P1036

8. CUT SHIELD BACK FLUSH WITH INSULATION, TYP BOTH ENDS
7. APPLY TAPE (FIND NO. 19) BETWEEN FIND NOS. 2 & 3 AS REQD.
6. SPOT TIE AS REQUIRED.
5. ROUTING OF WIRES IS SHOWN FOR REFERENCE ONLY.
4. BAG KEYS (PART OF F/N 8) AND ATTACH SECURELY TO ASSEMBLY
3. USE HARDWARE IN ACCORDANCE WITH 98A05536.
2. "P1" REFERENCE DESIGNATION SHOWN FOR INFORMATION ONLY AND DOES NOT APPEAR ON PART
1. MARK PART NO. 01P1036-000 & THE REV. LETTER OF THE PARTS LIST TO WHICH THE PART WAS MANUFACTURED & SERIAL NO. OF ASSEMBLY IN .12 HIGH CHARACTERS ON FIND NO. 16; ATTACH TO FIND NO. 2 APPROX WHERE SHOWN.

NOTE: UNLESS OTHERWISE SPECIFIED

MODEL NO.	620/L	DR KIUSSIS	1/14/71
NEXT ASSY	01E1035	CHK	1/17/71
MATERIAL		DSGN KIUSSIS	1/14/71
FINISH		ENGR J. Marsh	3/15/71
		APPD	3/15/71
		APPD	3/19/71

DIMENSIONS ARE IN INCHES AND AFTER FINISHING
TOLERANCES (UNLESS OTHERWISE SPECIFIED)
X ±.1
XX ±.03
XXX ±.010
ANGLES ±.5°
BREAK ALL SHARP EDGES .010 R APPROX
DO NOT SCALE DRAWING

THIS DOCUMENT MAY CONTAIN PROPRIETARY INFORMATION AND SUCH INFORMATION MAY NOT BE DISCLOSED TO OTHERS FOR ANY PURPOSE OR USED TO PRODUCE THE ARTICLE OR SUBJECT, WITHOUT WRITTEN PERMISSION FROM VDM

varian data machines /a varian subsidiary
2722 michelson drive / irvine / california / 92664

TITLE: FRONT PANEL ASSY

CODE IDENT NO.	SIZE	DWG NO	REV
21101	D	01D1036	C

SCALE 1/2 SHEET 1 OF 1

REVISIONS				
SYM	ZONE	DESCRIPTION	APPROVED	DATE
A	D8	PRODUCTION RELEASE EN 5412		4/2/71
B	B4	REVISE CPU TOP VIEW, ADDED DIM CPU INSIDE VIEW PER EN 5666		6/1/71

93D0275 B

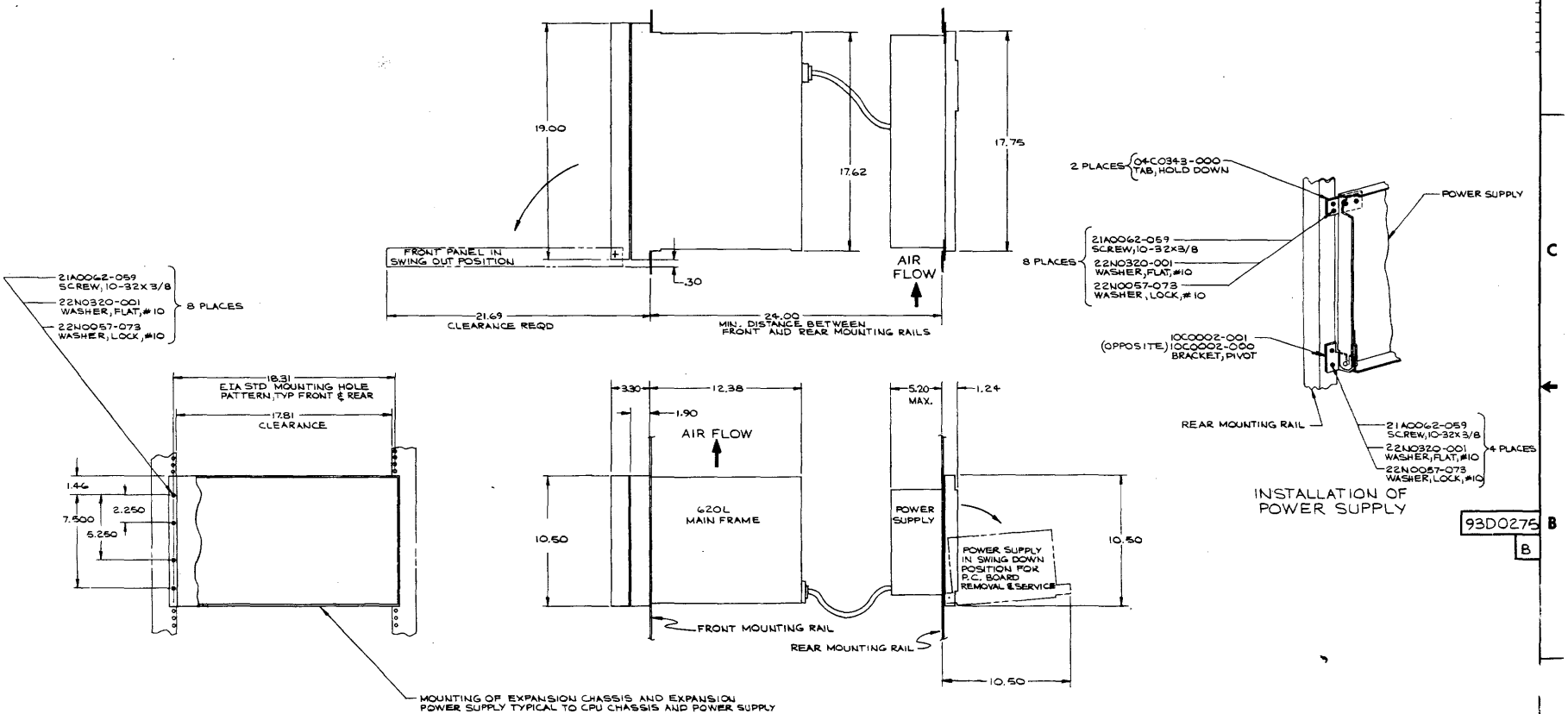

93D0275 B

NOTE: UNLESS OTHERWISE SPECIFIED

MODEL NO. 620/L	DIMENSIONS ARE IN INCHES AND AFTER FINISHING	DR	5/26/71
NEXT ASSY MULTIPLE USAGE	TOLERANCES (UNLESS OTHERWISE SPECIFIED) .X ±.1 .XX ±.03 .XXX ±.010 ANGLES ± 0.5°	CHK	5/31/71
MATERIAL		DSGN	5/24/71
		ENGR MARSH	6/1/71
		APPD	6/7/71
FINISH	BREAK ALL SHARP EDGES .010 R APPROX	APPD	6/1/71
	DO NOT SCALE DRAWING	THIS DOCUMENT MAY CONTAIN PROPRIETARY INFORMATION AND SUCH INFORMATION MAY NOT BE DISCLOSED TO OTHERS FOR ANY PURPOSE OR USED TO PRODUCE THE ARTICLE OR SUBJECT, WITHOUT WRITTEN PERMISSION FROM VDM	

varian data machines, a varian subsidiary, 2722 michelson drive / irvine / california / 92664

TITLE: INSTL DWG, PWR SUP, 620L BSC

CODE IDENT NO.	SIZE	DWG NO	REV
21101	D	93D0275	B

SCALE — SHEET 1 OF 1

PIN ASSIGNMENT

PIN	SIDE "A"	SIDE "B"
1	GND	GND
2	CA1	CA1
3	CC1	CC1
4	CA3	CA3
5	CC3	CC3
6	CA5	CA5
7	CC5	CC5
8	CA7	CA7
9	CC7	CC7
10	SPARE	SPARE
11	SPARE	SPARE
12	SPARE	SPARE
13	X56	X57
14	X54	X55
15	X52	X53
16	X50	X51
17	RTI-1	RTI-1
18	GND	GND
19	RTI-2	RTI-2
20	$\bar{S}11$	$\bar{I}11$
21	I11	$\bar{S}6$
22	S6	I6
23	$\bar{S}15$	$\bar{I}15$
24	I15	$\bar{S}9$
25	S9	I9
26	S5	$\bar{I}5$
27	I5	$\bar{S}7$
28	S7	I7
29	S0	$\bar{I}0$
30	I0	$\bar{S}4$
31	S4	I4
32	SPARE	SPARE
33	SPARE	SPARE
34	SPARE	SPARE
35	S1	$\bar{I}1$
36	I1	$\bar{S}12$
37	S12	I12
38	S14	$\bar{I}14$
39	I14	$\bar{S}10$
40	S10	I10
41	S3	$\bar{I}3$
42	I3	$\bar{S}13$
43	S13	I13
44	S8	$\bar{I}8$
45	I8	$\bar{S}2$
46	S2	I2
47	SPARE	SPARE
48	GND	GND
49	SPARE	SPARE
50	YS1	YS0
51	YS3	YS2
52	YS5	YS4
53	YS7	YS6
54	SPARE	SPARE
55	SPARE	SPARE
56	SPARE	SPARE
57	CA6	CA6
58	CC6	CC6
59	CA4	CA4
60	CC4	CC4
61	CA2	CA2
62	CC2	CC2
63	CA0	CA0
64	CC0	CC0
65	GND	GND

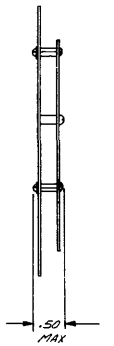

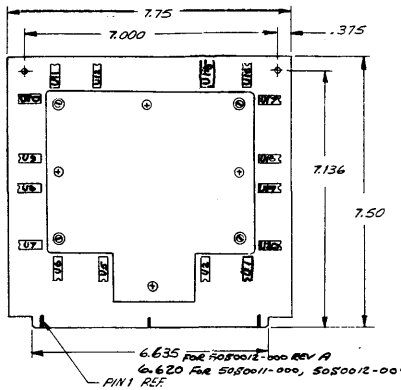

SIDE "A" SHOWN

TYPICAL TEST PROGRAM TIMINGS

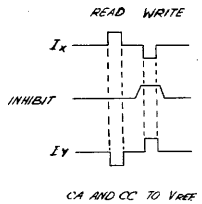

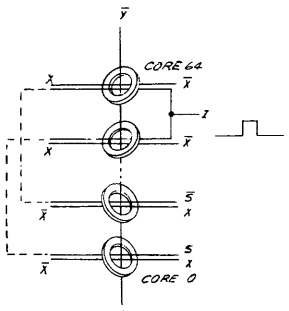

TYPICAL STACK LINES

DRIVE

	U20 CC0 CA0	U19 CC1 CA1	U18 CC2 CA2	U17 CC3 CA3	U19 CC4 CA4	U10 CC5 CA5	U11 CC6 CA6	U8 CC7 CA7
XS0	0	2	16	18	45	47	61	63
XS1	1	3	17	19	44	46	60	62
XS2	4	6	20	22	41	43	57	59
XS3	5	7	21	23	40	42	56	58
XS4	8	10	24	26	37	39	53	55
XS5	9	11	25	27	36	38	52	54
XS6	12	14	28	30	33	35	49	51
XS7	13	15	29	31	32	34	48	50

"X" DECODE DRIVE

DRIVE

	U1 CC0 CA0	U11 CC1 CA1	U16 CC2 CA2	U6 CC3 CA3	U2 CC4 CA4	U12 CC5 CA5	U15 CC6 CA6	U5 CC7 CA7
YS0	0	2	16	18	32	34	48	50
YS1	1	3	17	19	33	35	49	51
YS2	4	6	20	22	36	38	52	54
YS3	5	7	21	23	37	39	53	55
YS4	8	10	24	26	40	42	56	58
YS5	9	11	25	27	41	43	57	59
YS6	12	14	28	30	44	46	60	62
YS7	13	15	29	31	45	47	61	63

"Y" DIODE DECODE

WORST CASE PATTERN

	Y_0	Y_1	Y_2	Y_3	...	Y31	Y32	...	Y63
X0	1	1	1	1		1	0	0	0
X1	0	0	0	0		0	1	1	1
X2	1	1	1	1		1	0	0	0
X3	0	0	0	0		0	1	1	1
X63	0	0	0	0		0	1	1	1

SINK

6 INTEGRATED CIRCUIT U3, U4, U13 & U14 NOT USED.

5 PCB TYPE: PLANAR PLUGGABLE. COMPONENTS AND CORES ON ONE SIDE.

4 CAPACITY: 4KX18 18 MIL MAX. (COINCIDENT)
8KX9 18 MIL MAX.
(COINCIDENT/ANTICOINCIDENT, 4K DECODE).

3 WIRING: 3 WIRE - 3D
X & Y - CONTINOUSLY WIRED
SENSE/INHIBIT - BOWTIE 3 POINT TERMINATION.

2 DIODE TYPE: INTERGRATED CIRCUIT - DIODE ARRAY, DUAL-IN-LINE 16 DIODES PER PACKAGE. AMPEX PN 586-687.

1 CONNECTION TYPE: TOTAL 130 CONTACTS, 65 CONTACTS EACH SIDE SPACED AT .100. MATING CONNECTOR TYPE IS MASTERITE IND. PN 008GR65-DR-B-X OR EQUIV.

NOTES: UNLESS OTHERWISE SPECIFIED.

REVISIONS					
LTR	ZONE	DESCRIPTION	SIGNATURE AND DATE DFT	CHK	ENGRG
A		ERN 786-C	3-2-72		

DISTR CODE

3238441

PARTS LIST ☐

NOTICE
THIS DRAWING SHALL NOT BE DUPLICATED, USED FOR ANY PURPOSE OTHER THAN THAT FOR WHICH PROVIDED OR DISCLOSED, IN WHOLE OR IN PART, WITHOUT THE WRITTEN CONSENT OF AMPEX CORPORATION. PROVIDED, HOWEVER, THAT IF THIS DRAWING IS SPECIFIED TO BE DELIVERED TO THE GOVERNMENT, OR TO A GOVERNMENT CONTRACTOR, PURSUANT TO A GOVERNMENT PRIME OR SUBCONTRACT, THE GOVERNMENT MAY MAKE SUCH USE OF THIS DRAWING AS IS PERMITTED BY THE APPLICABLE "DATA" CLAUSE SET FORTH IN SUCH CONTRACT OR SUBCONTRACT.

UNLESS OTHERWISE SPECIFIED
DIMENSIONS ARE IN INCHES AND INCLUDE CHEMICALLY APPLIED OR PLATED FINISHES.
TOL ± | 2 PLC | 3 PLC | ANG
REMOVE BURRS AND SHARP EDGES YES ☐ NO ☐
DO NOT SCALE THIS PRINT

SIGNATURE		DATE
DRAWN BY	O. Wallwork	2-11-72
CHK BY		
DFT APPD		
ENGRG APPD		
AUTH BY		

MATERIAL:
FINISH:

NEXT ASSY	USED ON
3256373	9483-4411
APPLICATION	

AMPEX
COMPUTER PRODUCTS DIV
Culver City, California 90230

ELECTRICAL / MECHANICAL INTERFACE AND SCHEMATIC

SIZE D | CODE IDENT NO 09150 | 3238441

SCALE NONE | SHEET 1 OF 1

REVISIONS				
SYM	ZONE	DESCRIPTION	APPROVED	DATE
X2		PROTOTYPE RELEASE		
A		PRODUCTION RELEASE EN 5210	[illegible]	[illegible]
B		RELOCATED F-F & E-E EN [illegible]	[illegible]	[illegible]
C	[illegible]	REMOVED CONNECTOR MTG HARDWARE, ALL STANDOFFS (& HARDWARE), ADD NOTE 3 PER EN 8532	[illegible]	[illegible]
D	[illegible]	RELOCATED EDGE OF BOARD AND TP2-7 PER EN 5541	[illegible]	[illegible]
E	[illegible]	ADDED DASH NO CHART TO F/D PER EN 80415	[illegible]	[illegible]
F	[illegible]	REMOVED ALL LOWER WIRES PER EN 60793	[illegible]	[illegible]
G	CW	ADDED G/N 4 PER EN 81735	[illegible]	[illegible]
H	[illegible]	REMOVED PLP EN 81712	[illegible]	[illegible]

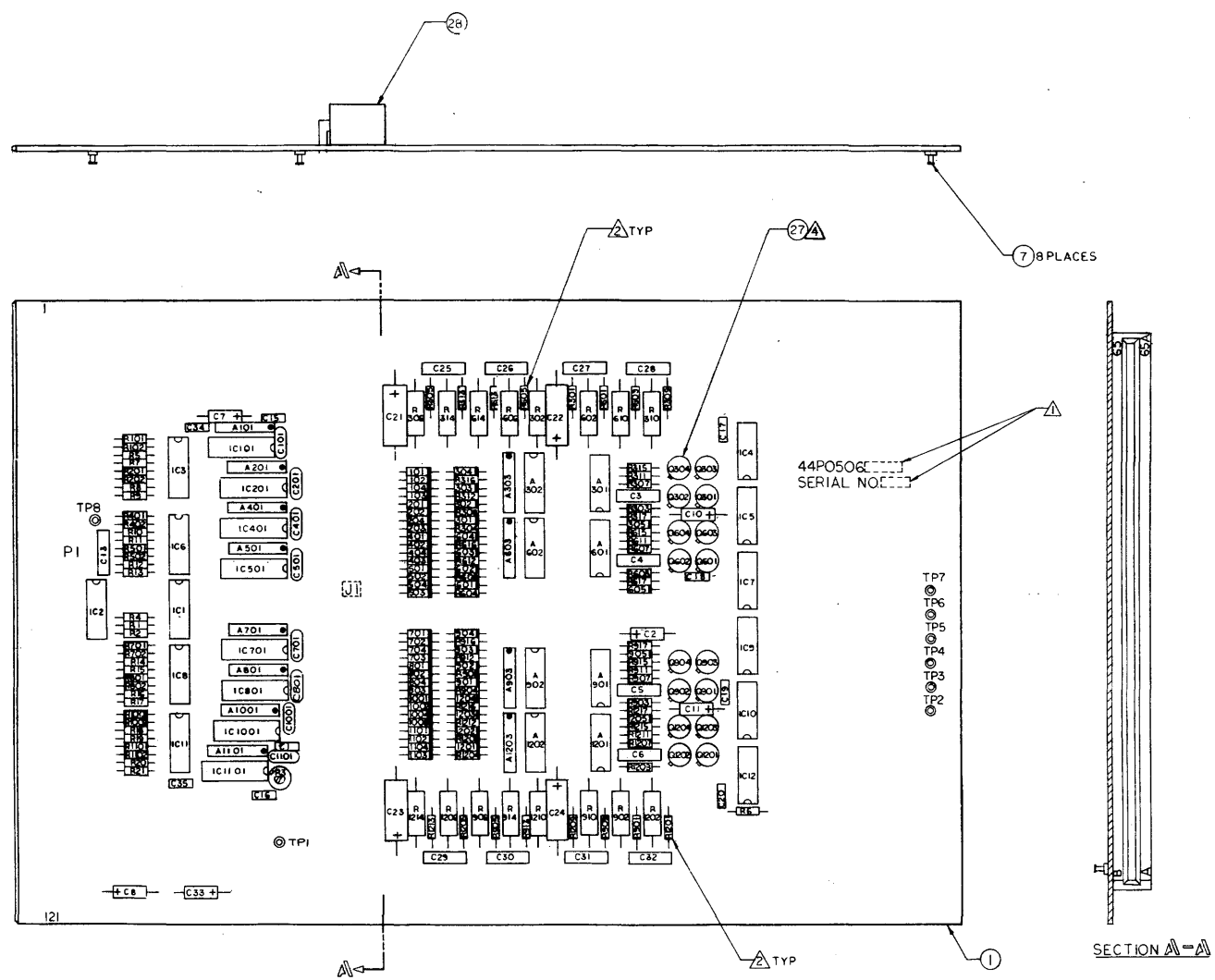

4 USE OF TRANSISTOR PADS OPTIONAL.

3. TOP SOLDER FILLET NOT REQUIRED ON INACCESSIBLE COMPONENT OR CONNECTOR.

2 VALUE FOR THE FOLLOWING COMPONENTS TO BE SELECTED AT FINAL TEST: R301, 305, 309, 313, 601, 605, 609, 613, 901, 905, 909, 913, 1201, 1205, 1209, 1213.

1 MARK APPLICABLE 44P0506 DASH NUMBER AND REVISION LETTER TO WHICH PART WAS MANUFACTURED AND SERIAL NUMBER USING 12 HIGH CHARACTERS APPROXIMATELY WHERE SHOWN

NOTE: UNLESS OTHERWISE SPECIFIED

DASH NUMBER CHART	
PART NUMBER	DESCRIPTION
44P0506-000	SENSE & INHIBIT ASSY
44P0506-001	SENSE & INHIBIT ASSY

FOR PARTS LIST SEE 44P0506

REFERENCE DRAWINGS

40D0454	P.W. BOARD
44P0506	PARTS LIST
91D0285	LOGIC DIAGRAM
97D0533	ARTWORK
97D0555	SILKSCREEN
97D0556	SOLDER MASK

MODEL NO. 620/L
NEXT ASSY 01E1034
MATERIAL
FINISH

DIMENSIONS ARE IN INCHES AND AFTER FINISHING
TOLERANCES UNLESS OTHERWISE SPECIFIED
X ± 1
XX ± .03
XXX ± .005
ANGLES ± 0.5°
BREAK ALL SHARP EDGES .005 R APPROX
DO NOT SCALE DRAWING

DR. [illegible] 1/28/70
CHK [illegible] 3/1/71
DSGN [illegible] 1/28/70
ENGR [illegible] 3/11/70
APPD [illegible] 2-19-71
APPD

THIS DOCUMENT MAY CONTAIN PROPRIETARY INFORMATION AND SUCH INFORMATION MAY NOT BE DISCLOSED TO OTHERS FOR ANY PURPOSE OR USED FOR PRODUCTION OR OR SUBJECT WITHOUT WRITTEN PERMISSION FROM VDM

vadim data machines A vadim subsidiary
[illegible]

TITLE SENSE/INHIBIT ASSY DM288

CODE IDENT NO. 21101 | SIZE E | DWG NO 44E0506 | REV

SCALE 2/1 | SHEET 1 OF 1

91D0285 F

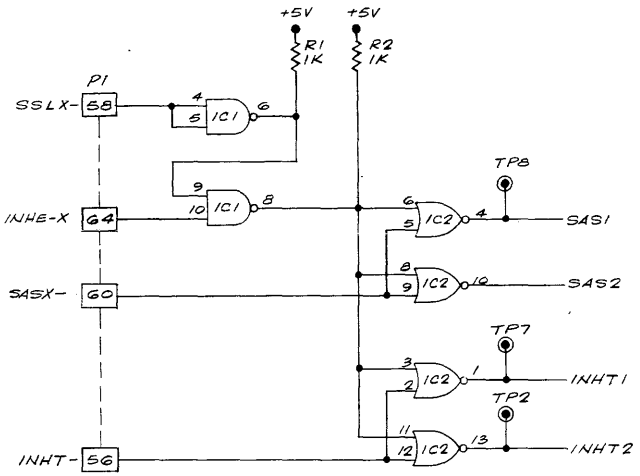

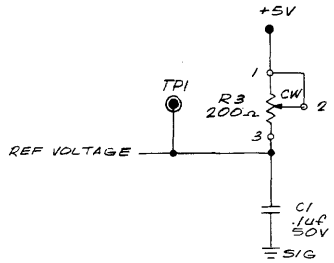

REVISIONS					
CODE	SYM	ZONE	DESCRIPTION	APPROVED	DATE
—	X		PROTOTYPE RELEASE		
—	X2		PROTOTYPE RELEASE; REVISED ALL CIRCUITS		
—	A	LW	PRODUCTION RELEASE EN 5310		2/11/71
—	B	MA	TP1 WAS ON SIGNAL SAS2 EN 5505		5/11/71
—	C	JM	REMOVED RESISTOR VALUE R= R7-21 WAS 2.2K, ADDED NOTE FIVE PER ELI BOMS		8/15/72
—	D	JM	REVISED SHT 4 PER EN 81270		8/29/72
—	E	JM	.0018 uf WAS .0039 uf & 14Ω ± 1% 3W WAS 12Ω ± 1% 3W. REVISED PER EN 81307		9/20/72
B	F	JM	SHT 2 R-102, 6, 108 & 14 WAS 14 Ω PER EN 83072		11/15/72

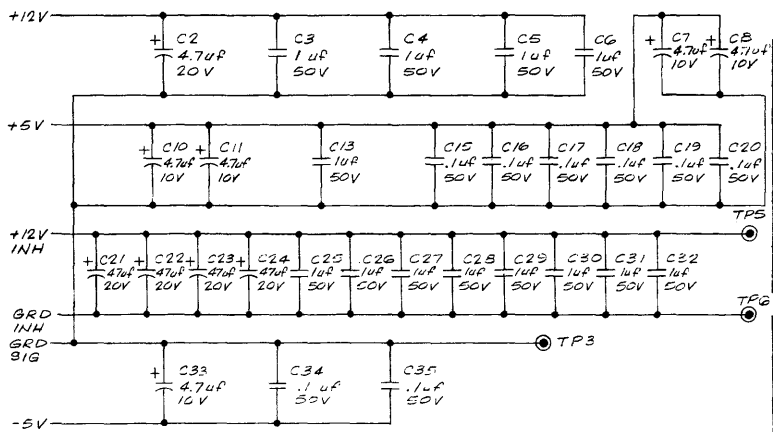

REFERENCE DESIGNATIONS	
LAST USED	NOT USED
C35, C1104	C9,12,14
R21, R1217	
CR1205	
IC12, IC1101	
Q1204	
A1203	
TP8	
P1	
J1	

REFERENCE DRAWINGS	
40D0454	PW BOARD
44E0506	ASSEMBLY
44P0506	PARTS LIST
97D0533	ARTWORK
97D0555	SILKSCREEN
97D0556	SOLDER MASK

5. VALUE FOR INDICATED RESISTORS IS: FOR 44P0506-000 ASSY 2.2K OHMS FOR 44P0506-001 ASSY 4.3 OHMS

4. POWER DISTRIBUTION TO IC1 THRU IC12: PIN 7 - GRD PIN 14 - +5V
3. PREFIX COMPONENT REF DESIG NO. WITH CIRCUIT NUMBER EXAMPLE; CKT 1 - R101, R102 CKT 2 - R201, R202.
2. COMPONENT VALUE TO BE DETERMINED AT FINAL TEST
1. ALL RESISTOR VALUES ARE IN OHMS, 1/4 W, ±5%.

NOTE: UNLESS OTHERWISE SPECIFIED

MODEL NO. 620/L
NEXT ASSY 44E0506
MATERIAL
FINISH

DIMENSIONS ARE IN INCHES AND AFTER FINISHING
TOLERANCES (UNLESS OTHERWISE SPECIFIED)
X ±1
XX ±.03
XXX ±.010
ANGLES ±0.5°
BREAK ALL SHARP EDGES .010 R APPROX
DO NOT SCALE DRAWING

DR		1/4/71
CHK		2/11/71
DSGN		1/19/71
ENGR		2/11/71
APPD		2-17-71
APPD		

THIS DOCUMENT MAY CONTAIN PROPRIETARY INFORMATION AND SUCH INFORMATION MAY NOT BE DISCLOSED TO OTHERS FOR ANY PURPOSE OR USED TO PRODUCE THE ARTICLE OR SUBJECT, WITHOUT WRITTEN PERMISSION FROM VDM

varian data machines (a varian subsidiary)
2722 michelson drive / irvine / california / 92664

TITLE: LOGIC DIAG SEN/INH DM288

CODE IDENT NO.	SIZE	DWG NO	REV
21101	D	91D0285	F

SCALE NONE SHEET 1 OF 4

91D0285 F

91D0285 E

REVISIONS				
SYM	ZONE	DESCRIPTION	APPROVED	DATE
		SEE SHEET ONE		

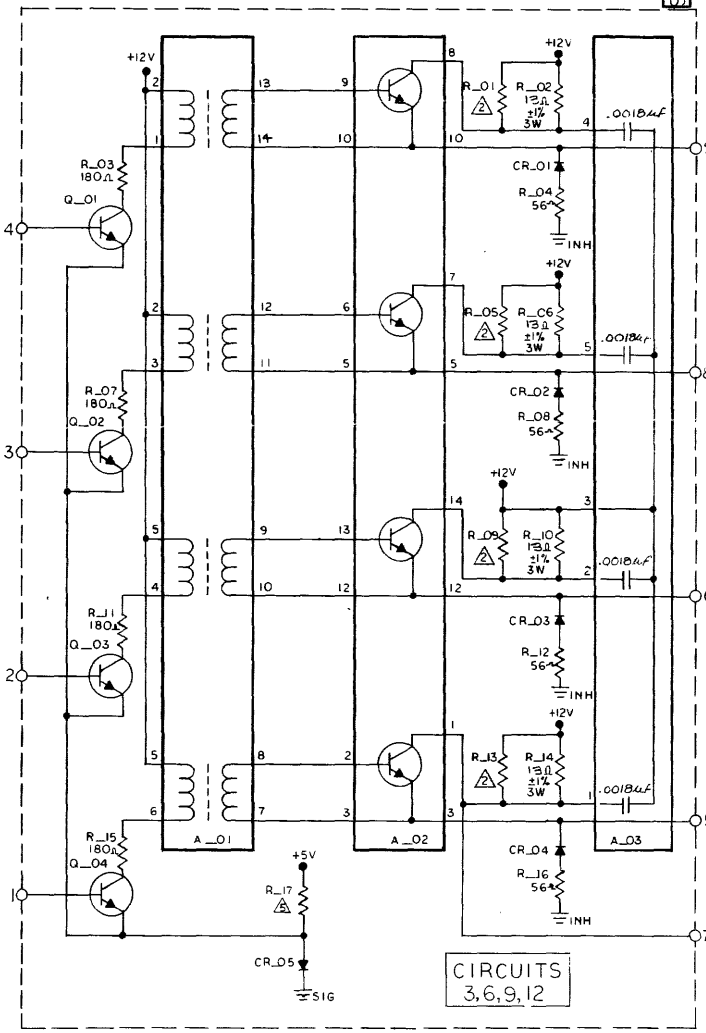

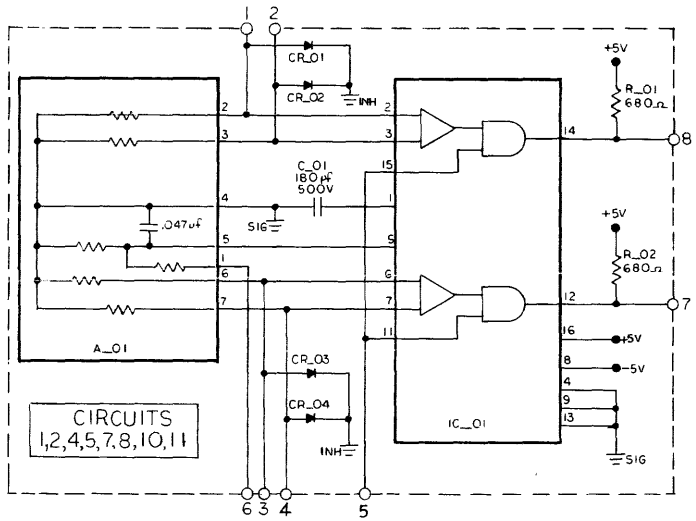

91D0285 F

NOTE: UNLESS OTHERWISE SPECIFIED

CODE IDENT NO.	SIZE	DWG NO	REV
21101	D	91D0285	F
SCALE NONE		SHEET 2 OF 4	

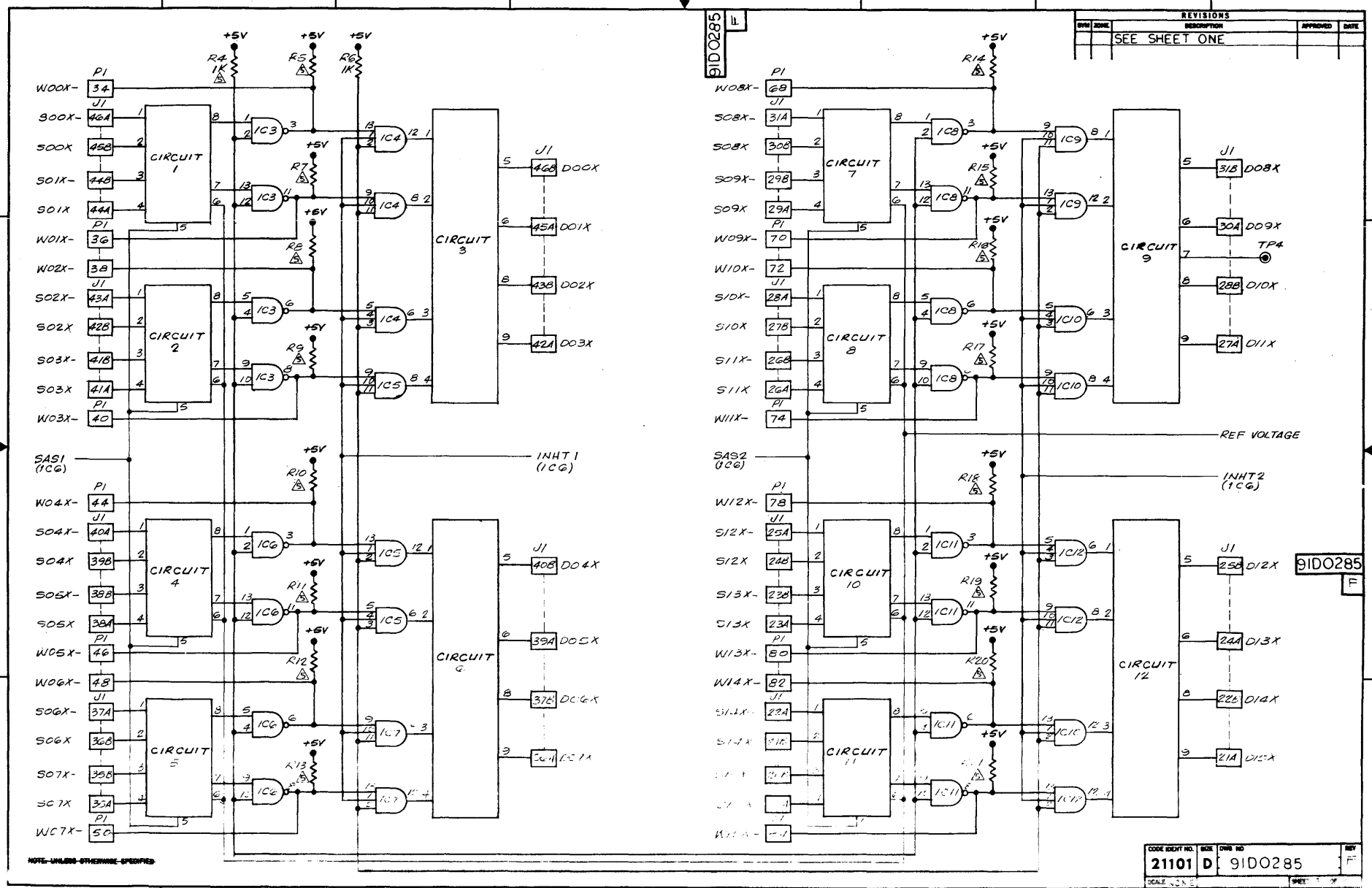
REVISIONS
SEE SHEET ONE
91D0285
F
CIRCUIT 1
CIRCUIT 2
CIRCUIT 3
CIRCUIT 4
CIRCUIT 5
CIRCUIT 6
CIRCUIT 7
CIRCUIT 8
CIRCUIT 9
CIRCUIT 10
CIRCUIT 11
CIRCUIT 12
+5V
W00X-
S00X
S01X-
S01X
W01X-
W02X-
S02X-
S02X
S03X-
S03X
W03X-
SAS1 (1CG)
INHT1 (1CG)
W04X-
S04X-
S04X
S05X-
S05X
W05X-
W06X-
S06X-
S06X
S07X-
S07X
W07X-
W08X-
S08X-
S08X
S09X-
S09X
W09X-
W10X-
S10X-
S10X
S11X-
S11X
W11X-
REF VOLTAGE
SAS2 (1CG)
INHT2 (1CG)
W12X-
S12X-
S12X
S13X-
S13X
W13X-
W14X-
D00X
D01X
D02X
D03X
D04X
D05X
D06X
D07X
D08X
D09X
D10X
D11X
D12X
D13X
D14X
D15X
TP4
NOTE: UNLESS OTHERWISE SPECIFIED
CODE IDENT NO. 21101
SIZE D
DWG NO 91D0285
REV F
SCALE NONE

91D0285 F

REVISIONS				
SYM	ZONE	DESCRIPTION	APPROVED	DATE
		SEE SHEET ONE		

CONNECTOR P1

PIN	FUNCTION	SHEET
1	G SIG	
2	G SIG	
3	G SIG	
4	G SIG	
5	G SIG	
6	CA0X-X	
7	CC0X-X	
8	CA2X-X	
9	CC2X-X	
10	CA4X-X	
11	CC4X-X	
12		
13	CCGX-X	
14		
15	CAGX-X	
16		
17	G SIG	
18	YSGX-X	
19	G SIG	
20	YS7X-X	
21	G SIG	
22	YS4X-X	
23	G SIG	
24	YS5X-X	
25	G SIG	
26	YS2X-X	
27	G SIG	
28	YS3X-X	
29	G SIG	
30	YS0X-X	
31	G SIG	
32	YS1X-X	
33	G SIG	
34	W00X-	3
35	G SIG	
36	W01X-	3
37	G SIG	
38	W02X-	3
39	G SIG	
40	W03X-	3
41	G SIG	

CONNECTOR P1

PIN	FUNCTION	SHEET
42	+5V	
43	G SIG	
44	W04X-	3
45	G SIG	
46	W05X-	3
47	G SIG	
48	W06X-	3
49	G SIG	
50	W07X-	3
51	G SIG	
52	W16X-	
53	G SIG	
54	W17X-	
55	G SIG	
56	INHT-	1
57	G SIG	
58	SSLX-	1
59	G SIG	
60	SASX-	1
63	G SIG	
64	INHE-X	1
65	G SIG	
66	G SIG	
67	G SIG	
68	W08X-	3
69	G SIG	
70	W09X-	3
71	G SIG	
72	W10X-	3
73	G SIG	
74	W11X-	3
75	G SIG	
76	G SIG	
77	G SIG	
78	W12X-	3
79	G SIG	
80	W13X-	3
81	G SIG	
82	W14X-	3
83	G SIG	
84	W15X-	3

CONNECTOR P1

PIN	FUNCTION	SHEET
85	G SIG	
86	SASX-	
87	G SIG	
88	TSHX	
89	G SIG	
90	TSLX	
91	G SIG	
92	XS0X-X	
93	G SIG	
94	XS1X-X	
95	G SIG	
96	XS2X-X	
97	G SIG	
98	XS3X-X	
99	G SIG	
100	XS4X-X	
101	G SIG	
102	XS5X-X	
103	G SIG	
104	XSGX-X	
105	CA7X-X	
106	XS7X-X	
107	CA5X-X	
108		
109	CA3X-X	
110	CC7X-X	
111	CC1X-X	
112	CC5X-X	
113	CA1X-X	
114	CC3X-X	
115	-5V	
116	+5V	
117	+12V	
118	+12V	
119	+12V	
120	+12V	
121	GSIG	
122	GSIG	

CONNECTOR J1

PIN	FUNCTION	SHEET
1A	G SIG	
1B	G SIG	
2A	CA1X-X	
2B	CA1X-X	
3A	CC1X-X	
3B	CC1X-X	
4A	CA3X-X	
4B	CA3X-X	
5A	CC3X-X	
5B	CC3X-X	
6A	CA5X-X	
6B	CA5X-X	
7A	CC5X-X	
7B	CC5X-X	
8A	CA7X-X	
8B	CA7X-X	
9A	CC7X-X	
9B	CC7X-X	
10A		
10B		
11A		
11B		
12A		
12B		
13A	XSGX-X	
13B	XS7X-X	
14A	XS4X-X	
14B	XS5X-X	
15A	XS2X-X	
15B	XS3X-X	
16A	XS0X-X	
16B	XS1X-X	
17A	TSLX	
17B	TSLX	
18A	G SIG	
18B	G SIG	
19A	TSHX	
19B	TSHX	

CONNECTOR J1

PIN	FUNCTION	SHEET
20A	S1CX	3
20B	S1CX-	3
21A	D15X	3
21B	S14X	3
22A	S14X-	3
22B	D14X	3
23A	S13X	3
23B	S13X-	3
24A	D13X	3
24B	S12X	3
25A	S12X-	3
25B	D12X	3
26A	S11X	3
26B	S11X-	3
27A	D11X	3
27B	S10X	3
28A	S1CX-	3
28B	D10X	3
29A	S09X	3
29B	S09X-	3
30A	D09X	3
30B	S08X	3
31A	S08X-	3
31B	D08X	3
32A	S17X	
32B	S17X-	
33A	D17X	
33B	S1GX	
34A	S1GX-	
34B	D1GX	
35A	S07X	3
35B	S07X-	3
36A	D07X	3
36B	S06X	3
37A	S06X-	3
37B	D06X	3
38A	S0CX	3
38B	S0CX-	3

CONNECTOR J1

PIN	FUNCTION	SHEET
39A	D05X	3
39B	S04X	3
40A	S04X-	3
40B	D04X	3
41A	S03X	3
41B	S03X-	3
42A	D03X	3
42B	S02X	3
43A	SC2X-	3
43B	D02X	3
44A	S01X	
44B	S01X-	
45A	D01X	3
45B	S00X	
46A	S00X-	
46B	D00X	3
47A	G SIG	
47B	G SIG	
48A	G SIG	
48B	G SIG	
49A	G SIG	
49B	G SIG	
50A	YS1X-X	
50B	YS0X-X	
51A	YS3X-X	
51B	YS2X-X	
52A	YS5X-X	
52B	YS4X-X	
53A	YS7X-X	
53B	YSGX-X	
54A		
54B		
55A		
55B		
56A		
56B		
57A	CAGX-X	
57B	CAGX-X	

CONNECTOR J1

PIN	FUNCTION	SHEET
58A	CCGX-X	
58B	CCGX-X	
59A	CA4X-X	
59B	CA4X-X	
60A	CC4X-X	
60B	CC4X-X	
61A	CA2X-X	
61B	CA2X-X	
62A	CC2X-X	
62B	CC2X-X	
63A	CA0X-X	
63B	CA0X-X	
64A	CC0X-X	
64B	CC0X-X	
65A	G SIG	
65B	G SIG	

91D0285 F

NOTE: UNLESS OTHERWISE SPECIFIED

CODE IDENT NO.	SIZE	DWG NO	REV
21101	D	91D0285	F
SCALE NONE		SHEET 4 OF 4	

CAUTION: EN 82664
AFFECTS THIS DWG.

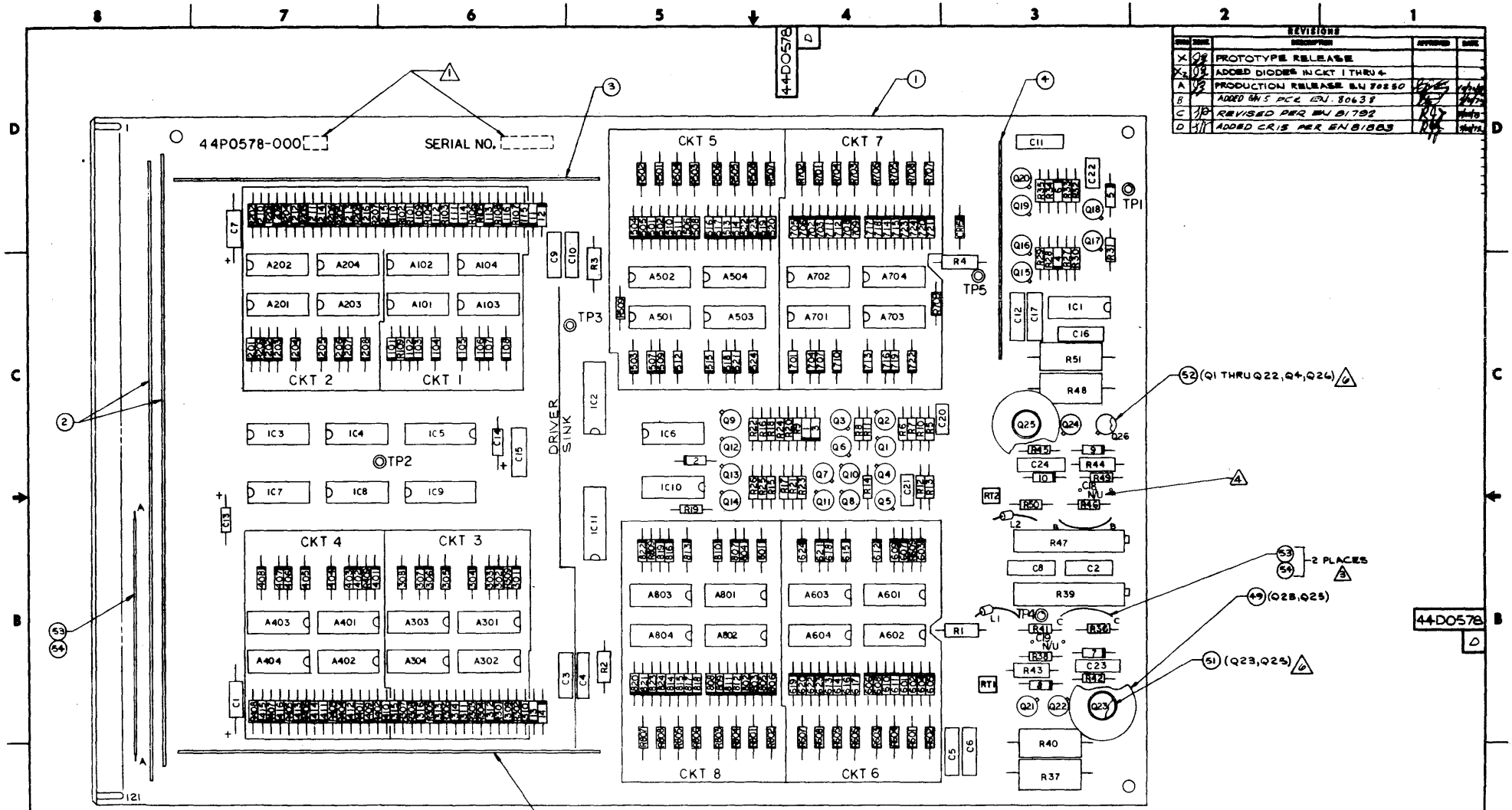

REVISIONS				
ZONE	ZONE	DESCRIPTION	APPROVED	DATE
X	02	PROTOTYPE RELEASE		
X2	02	ADDED DIODES IN CKT 1 THRU 4		
A	03	PRODUCTION RELEASE EN 80250		
B		ADDED EN'S PCL EN J. 80638		
C	10	REVISED PER EN 81792		
D	11	ADDED CR15 PER EN 81883		

5. INSTALL FREON SENSITIVE ITEMS (R39, R47) AFTER NORMAL CLEANING PROCESS
4 N/U DENOTES COMPONENT NOT USED
3 JUMPERS BETWEEN POINTS "B" & "C" TO BE 2.5±.25 LONG
2. PREFIX DIODE REFERENCE DESIGNATIONS WITH "CR" AS SHOWN. EXAMPLE: -R01- IS CR101
1 MARK REVISION LETTER OF PARTS LIST TO WHICH PART WAS MANUFACTURED AND SERIAL NO. USING .12 HIGH PERMANENT CHARACTERS APPROX WHERE SHOWN.
NOTE: UNLESS OTHERWISE SPECIFIED

6 USE OF TRANSTOR MOUNTING PADS OPTIONAL.

REFERENCE DRAWINGS
40D0497_BOARD DETAIL
91C0346_LOGIC DIAGRAM
97D0673_ARTWORK
97D0672_SILKSCREEN
97D0671_SOLDERMASK

FOR PARTS LIST SEE 44P0578

MODEL NO. 620/F-100
NEXT ASSY 01P1247
MATERIAL
FINISH

DRAWING DIMENSIONS ARE IN INCHES AND AFTER FINISHING
TOLERANCES UNLESS OTHERWISE SPECIFIED
X ±1
XX ±.03
.XXX ± .005
ANGLES ± 0.5°
BREAK ALL SHARP EDGES .005 R APPROX
DO NOT SCALE DRAWING

DRN	J. Sallo	9/30/71
CHK	[illegible]	9/30/71
ENGR	[illegible]	9/30/71
APPD	[illegible]	10/1/71
APPD	[illegible]	10/6/71

THIS DOCUMENT MAY CONTAIN PROPRIETARY INFORMATION AND SUCH INFORMATION MAY NOT BE DISCLOSED TO OTHERS FOR ANY PURPOSE OR USED TO PRODUCE THE ARTICLE OR SUBJECT, WITHOUT WRITTEN PERMISSION FROM VDS

TITLE: DRIVER/SINK SWITCH ASSY

CODE IDENT NO.	SIZE	DWG NO	REV
21101	D	44D0578	D

SCALE 2/1 SHEET 1 OF 1

4 | 3 | 2 | 1

D

C

B

A

NOTES: (UNLESS OTHERWISE SPECIFIED)

1. ALL RESISTORS ARE 1/4 W, ± 5%
2. THIS DRAWING CONSISTS OF SHEETS 1.0, 2.0, 3.0, 4.0, 5.0, 6.0, 7.0, 8.0, 9.0, 10.0
3. ON IC'S 1, 3, 4, 6, 7, 8 & 10 PIN 14 IS CONNECTED TO +5 AND PIN 7 IS CONNECTED TO GRD.
4. PREFIX COMPONENT REFERENCE DESIGNATION NO. WITH CIRCUIT NO. EXAMPLE: CKT 1, R101; CKT 2, R202

REFERENCE DESIGNATIONS	
LAST USED	NOT USED
C24	C18,19
CR15, CR_24	
L2	
Q26	
RS1, R_09	
RT 2	
IC 11	
A_04	

REFERENCE DRAWINGS	
44D0578	ASSEMBLY
44P0578	PARTS LIST
40D0497	BOARD DETAIL
97D0673	ARTWORK
97D0672	SILKSCREEN
97D0671	SOLDERMASK

DR		8/17/71
CHK		10/18/71
DSGN		9/9/71
ENGR		11/22/71
APPD		11/24/71
APPD		

THIS DOCUMENT MAY CONTAIN PROPRIETARY INFORMATION AND SUCH INFORMATION MAY NOT BE DISCLOSED TO OTHERS FOR ANY PURPOSE OR USED TO PRODUCE THE ARTICLE OR SUBJECT, WITHOUT WRITTEN PERMISSION FROM VDM

varian data machines /a varian subsidiary
2722 michelson drive / irvine / california / 92664

TITLE
LOGIC DIAGRAM
DR/SK SW

CODE IDENT NO.	SIZE	DWG NO	REV
21101	C	91C0346	C
SCALE —	620i-100	SHEET 1.0	

REVISIONS				
DWG	ZONE	DESCRIPTION	APPROVED	DATE
X	03	PROTOTYPE RELEASE		
X1	03	ADDED DIODES IN CKTS 1-4		
A	03	PRODUCTION RELEASED EN 80250		10/01/74
B	04	C23 & 24 WAS .33 UF 50VDC EN 80374		4/21/75
C	04	ADDED CR15 PER EN 81883		5/14/75

TABLE OF CONTENTS

DESCRIPTION	SHEET NO.
COVER	1.0
REVISION, TABLE OF CONTENTS & CONNECTOR PIN ASSIGNMENTS	2.0
DECOUPLING CAPS. & DRIVER SW'S, POSITIVE	3.0
DRIVER SWITCHES, NEGATIVE	4.0
SINK SWITCHES, NEGATIVE	5.0
SINK SWITCHES, POSITIVE	6.0
DRIVER LOGIC	7.0
SINK LOGIC	8.0
PREDRIVER	9.0
CURRENT SOURCES	10.0

CONNECTOR P1

PINS	FUNCTION	SHEET
1	GRD	
2		
3	GRD	
4	-12V	
5	GRD	
6	TCRX-	9.0
7	YS6B	8.0
8	YS6A	8.0
9	YS7B	8.0
10	YS7A	8.0
11	YS4B	8.0
12	YS4A	8.0
13	YS5B	8.0
14	YS5A	8.0
15	YS2B	8.0
16	YS2A	8.0
17	YS3B	8.0
18	YS3A	8.0
19	YS0B	8.0
20	YS0A	8.0
21	YS1B	8.0
22	YS1A	8.0
23	CA6A	7.0
24	CA1B	7.0
25	CA7A	7.0
26	CA0B	7.0
27	CA4A	7.0
28	CA3B	7.0
29	CA5A	7.0
30	CA2B	7.0
31	CA2A	7.0
32	CA7B	7.0
33	CA3A	7.0
34	CA6B	7.0
35	CA0A	7.0
36	CA5B	7.0
37	CA1A	7.0
38	CA4B	7.0
39	SPARE	7.0
40	SPARE	7.0
41	GRD	
42	GRD	
43	L11X+	8.0
44	L10X+	8.0
45	GRD	
46	L09X+	8.0
47	GRD	
48	RSTX-	9.0
49	GRD	
50	WSTX-	9.0
51	GRD	
52	SSLX-	9.0
53	GRD	
54	L02X+	9.0
55	GRD	
56	L05X+	7.0
57	GRD	
58	SDIS	7.0
59	GRD	
60	RXXX-	7.0
61	NOT AVAILABLE	
62	NOT AVAILABLE	
63	GRD	
64	L04X+	7.0
65	GRD	
66	L01X+	7.0
67	GRD	
68	L00X+	7.0
69	GRD	
70	L03X+	7.0
71	GRD	
72	RWT2-	9.0
73	GRD	
74	L12X+	9.0
75	GRD	
76	RWT1-	9.0
77	GRD	
78	L08X+	8.0
79	L07X+	8.0
80	L06X+	8.0
81	GRD	
82	GRD	
83	SPARE	7.0
84	CC1B	7.0
85	CC6A	7.0
86	CC0B	7.0
87	CC7A	7.0
88	CC3B	7.0
89	CC4A	7.0
90	CC2B	7.0
91	CC5A	7.0
92	CC5B	7.0
93	CC2A	7.0
94	CC4B	7.0
95	CC3A	7.0
96	CC7B	7.0
97	CC0A	7.0
98	CC6B	7.0
99	CC1A	7.0
100	XS6A	8.0
101	XS6B	8.0
102	XS7A	8.0
103	XS7B	8.0
104	XS4A	8.0
105	XS4B	8.0
106	XS5A	8.0
107	XS5B	8.0
108	XS2A	8.0
109	XS2B	8.0
110	XS3A	8.0
111	XS3B	8.0
112	XS0A	8.0
113	-12V	
114	XS1A	8.0
115	XS0B	8.0
116	+5V	
117	XS1B	8.0
118		
119	+12V	
120	+12V	
121	GRD	
122	GRD	

CONNECTOR FUNCTIONS

CODE IDENT NO.	SIZE	DWG NO	REV
21101	C	91C0346	C
SCALE —			SHEET 2.0

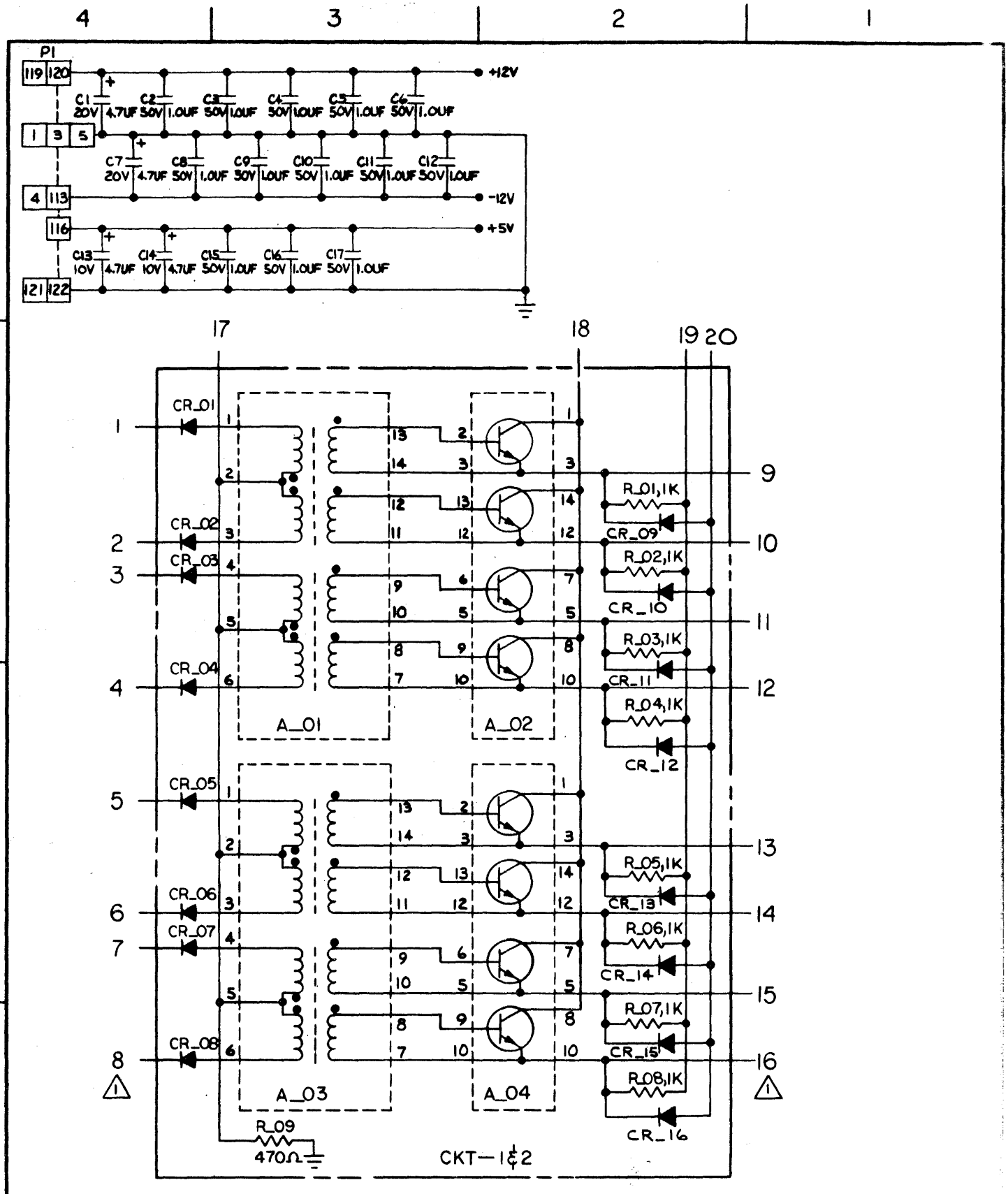

1 NUMBERS OUTSIDE PHANTOM LINES CORRESPOND TO CIRCUIT BLOCKS 1 & 2 ON SHT 7

DECOUPLING CAPS. & DRIVER SW'S, POSITIVE

CODE IDENT NO.	SIZE	DWG NO	REV
21101	C	91C0346	C
SCALE —			SHEET 3.0

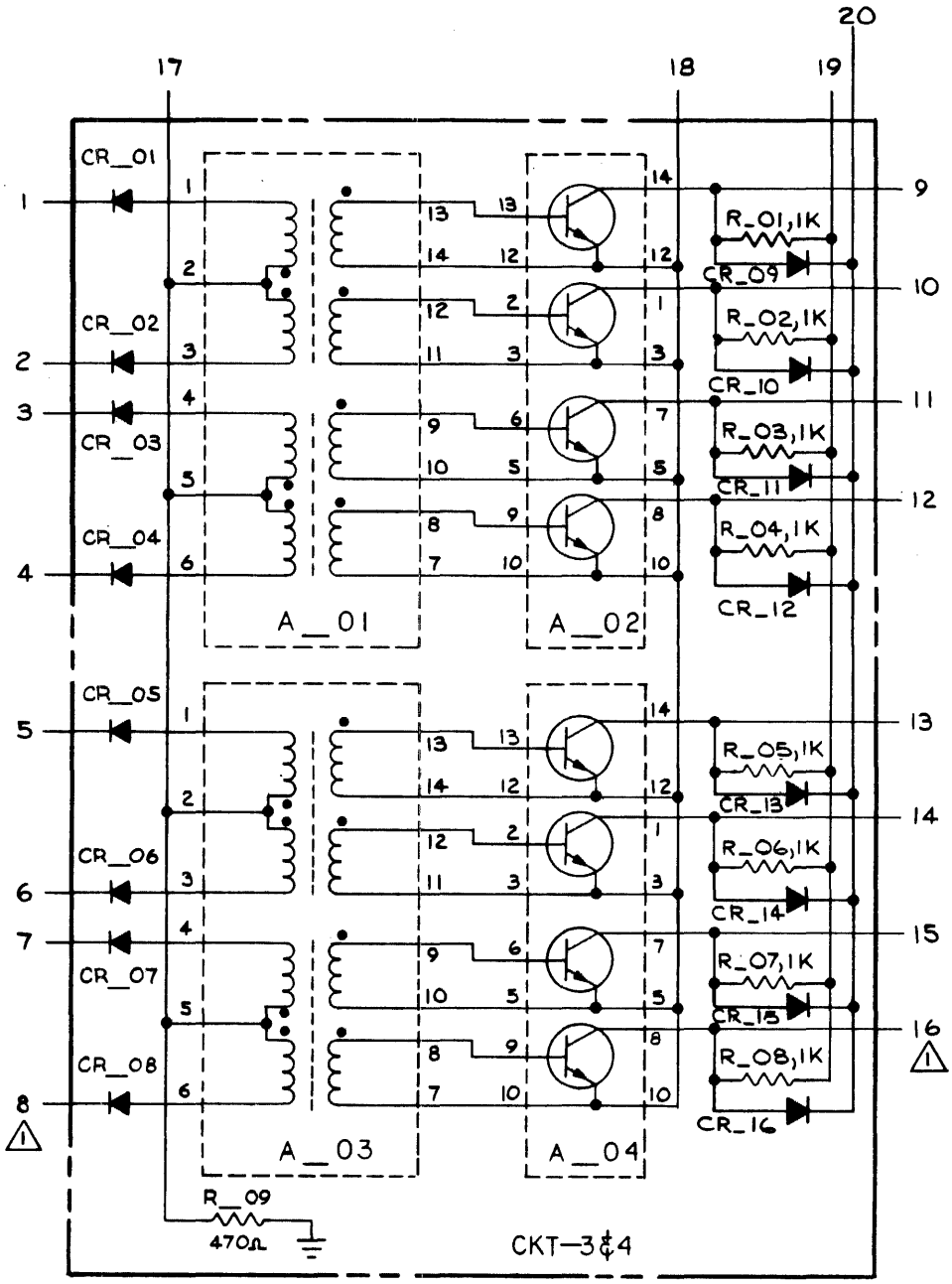

1 NUMBERS OUTSIDE PHANTOM LINES CORRESPOND TO CIRCUIT BLOCKS 3&4 ON SHT 7

DRIVER SWITCHES, NEGATIVE

CODE IDENT NO.	SIZE	DWG NO	REV
21101	C	9C0346	C
SCALE —			SHEET 4.0

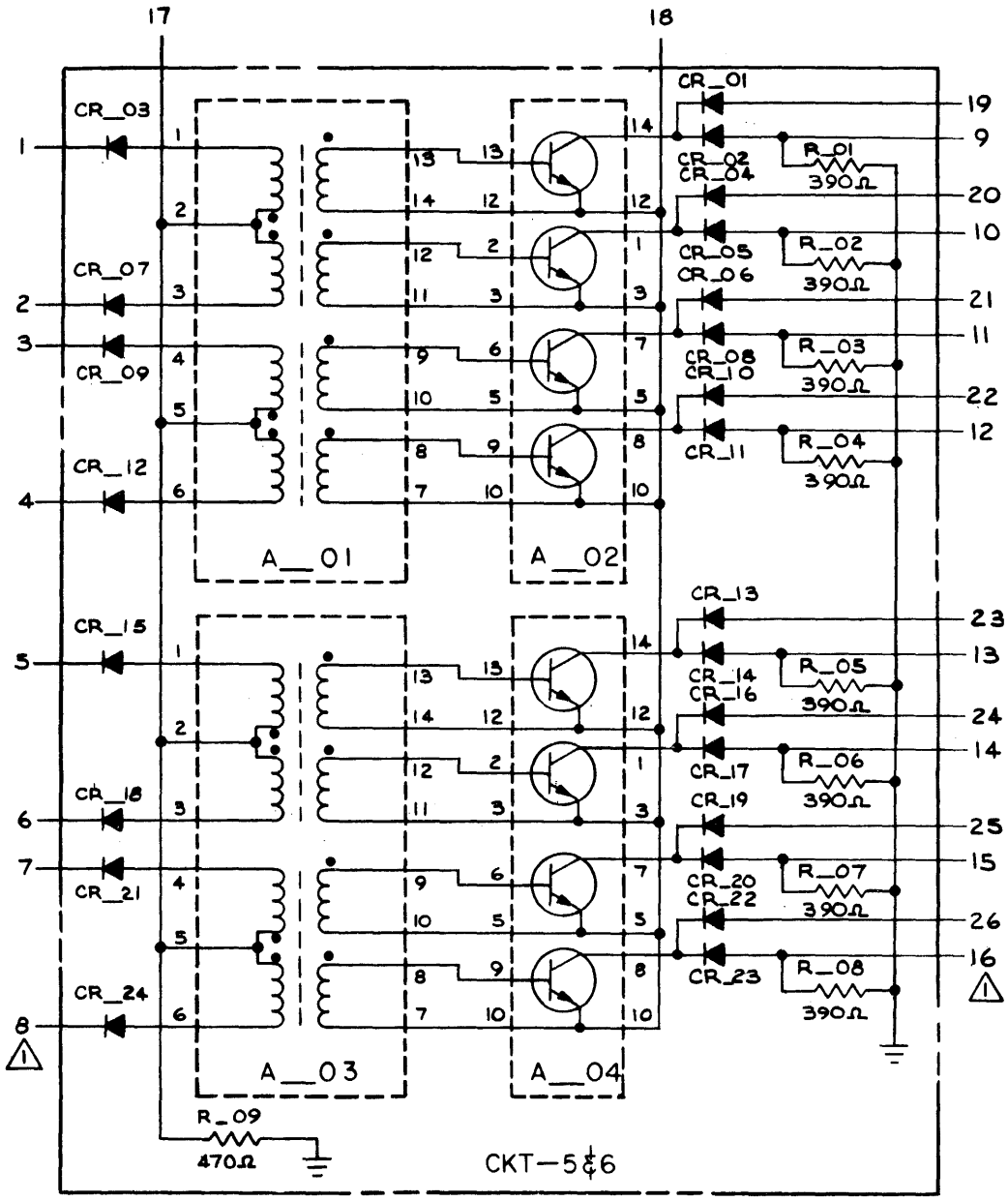

⚠1 NUMBERS OUTSIDE PHANTOM LINES CORRESPOND TO CIRCUIT BLOCKS 5 & 6 ON SHT 8

SINK SWITCH, NEGATIVE

CODE IDENT NO.	SIZE	DWG NO	REV
21101	C	91C0346	C
SCALE —			SHEET 5.0

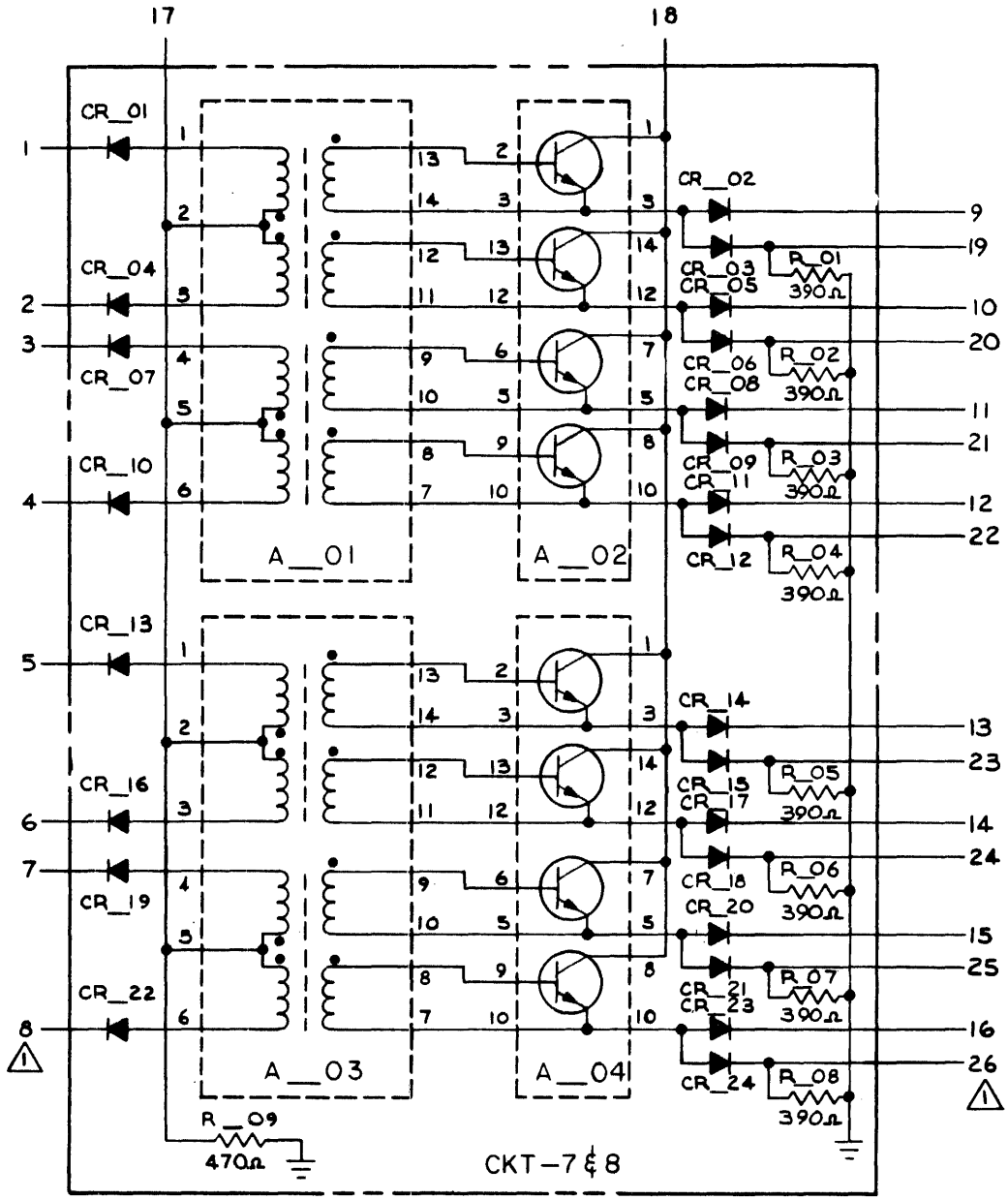

⚠1 NUMBERS OUTSIDE PHANTOM LINES CORRESPOND TO CIRCUIT BLOCKS 7 & 8 ON SHT 8

SINK SWITCH POSITIVE

CODE IDENT NO.	SIZE	DWG NO	REV
21101	C	91C0346	C
SCALE —			SHEET 6.0

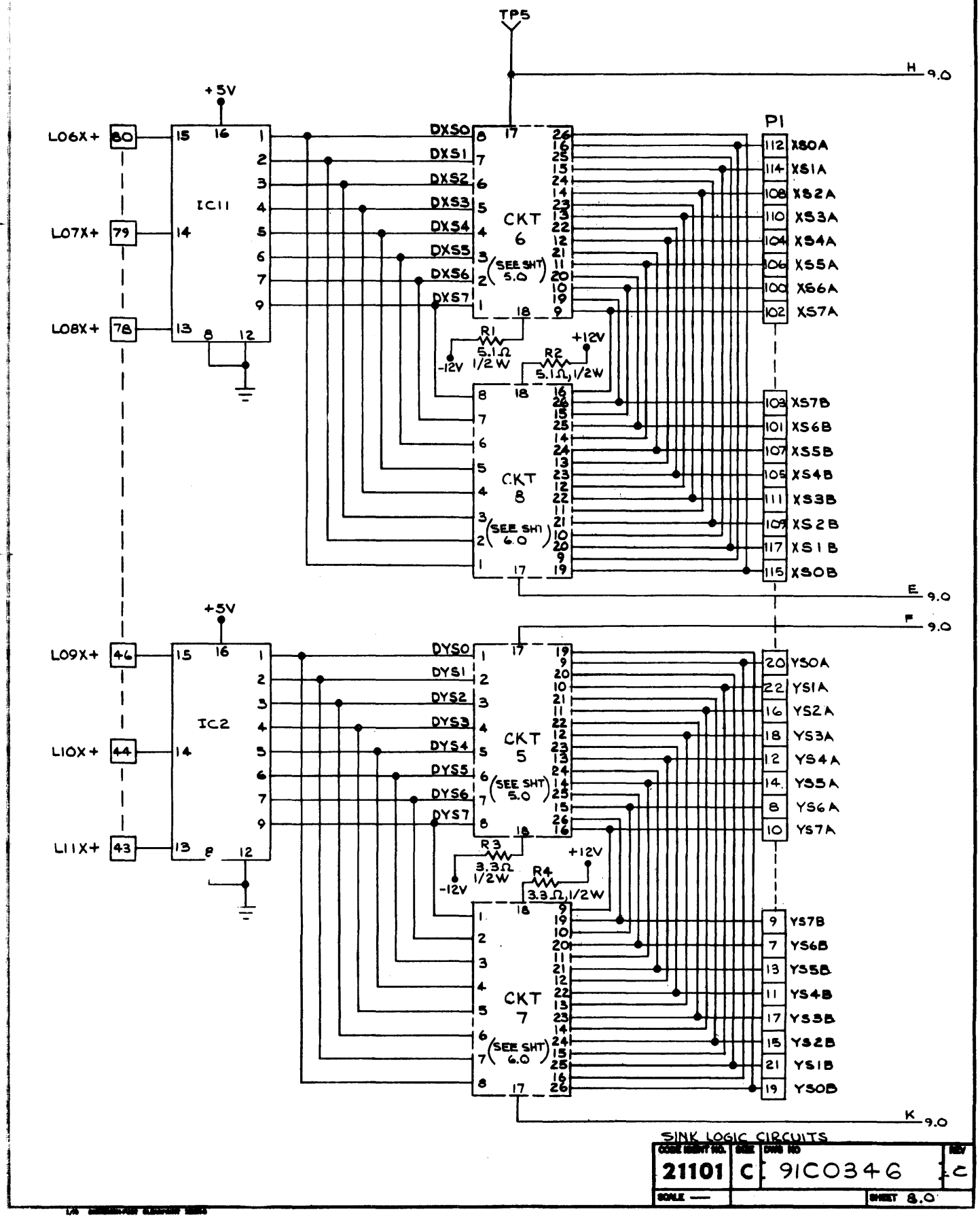
TP5
H 9.0
+5V
LO6X+ 80
LO7X+ 79
LO8X+ 78
IC11
DXS0
DXS1
DXS2
DXS3
DXS4
DXS5
DXS6
DXS7
CKT 6
(SEE SHT 5.0)
R1 5.1Ω 1/2W
-12V
R2 5.1Ω, 1/2W
+12V
CKT 8
(SEE SHT 6.0)
P1
112 XS0A
114 XS1A
108 XS2A
110 XS3A
104 XS4A
106 XS5A
100 XS6A
102 XS7A
103 XS7B
101 XS6B
107 XS5B
105 XS4B
111 XS3B
109 XS2B
117 XS1B
115 XS0B
E 9.0
F 9.0
+5V
LO9X+ 46
LI0X+ 44
LI1X+ 43
IC2
DYS0
DYS1
DYS2
DYS3
DYS4
DYS5
DYS6
DYS7
CKT 5
(SEE SHT 5.0)
R3 3.3Ω 1/2W
-12V
R4 3.3Ω, 1/2W
+12V
CKT 7
(SEE SHT 6.0)
20 YS0A
22 YS1A
16 YS2A
18 YS3A
12 YS4A
14 YS5A
8 YS6A
10 YS7A
9 YS7B
7 YS6B
13 YS5B
11 YS4B
17 YS3B
15 YS2B
21 YS1B
19 YS0B
K 9.0
SINK LOGIC CIRCUITS
21101
C
91C0346
SCALE —
SHEET 8.0

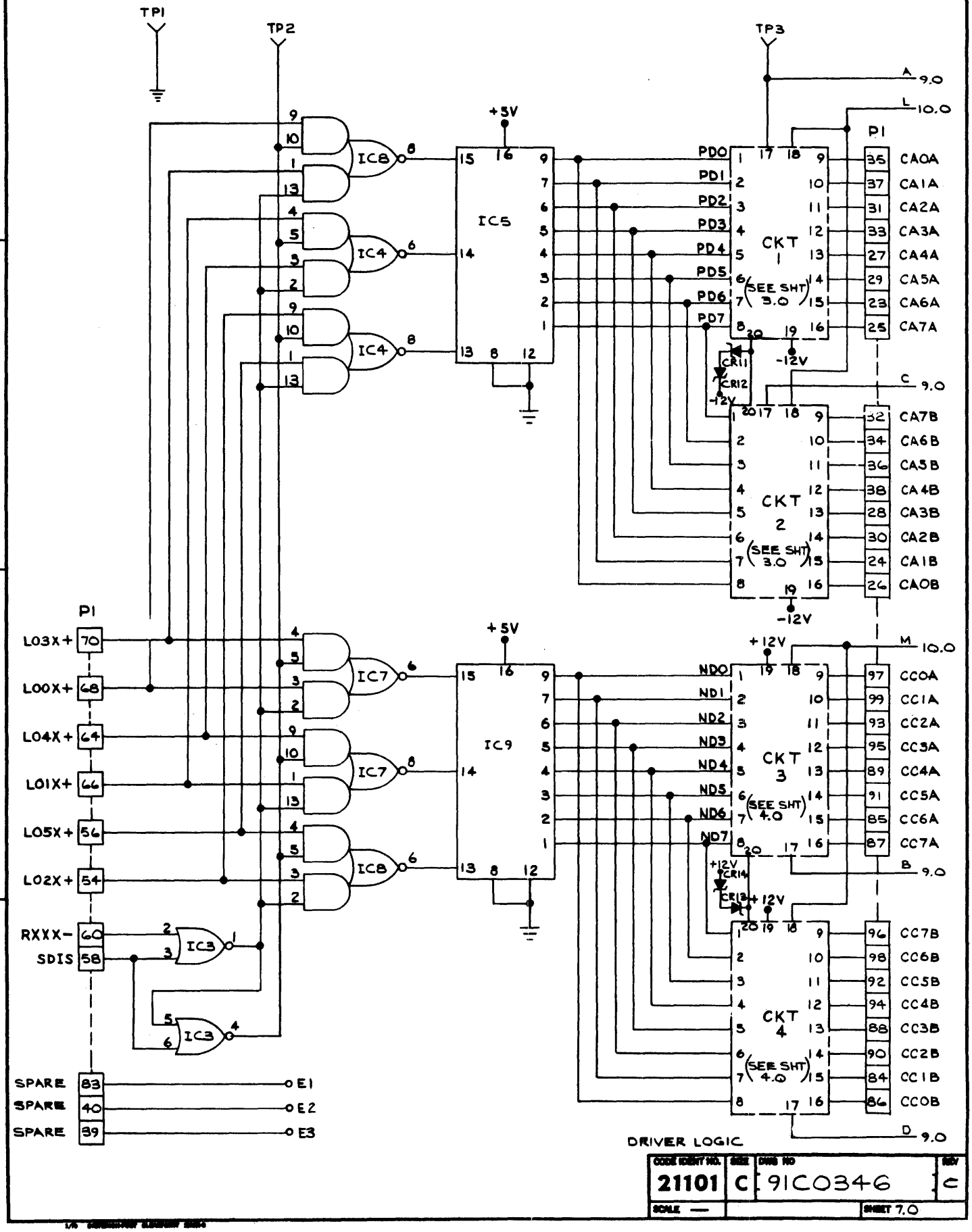
TP1
TP2
TP3
+5V
IC8
IC4
IC5
IC7
IC9
IC3
CKT 1
CKT 2
CKT 3
CKT 4
(SEE SHT 3.0)
(SEE SHT 4.0)
CR11
CR12
CR13
CR14
-12V
+12V
P1
PD0
PD1
PD2
PD3
PD4
PD5
PD6
PD7
ND0
ND1
ND2
ND3
ND4
ND5
ND6
ND7
CA0A
CA1A
CA2A
CA3A
CA4A
CA5A
CA6A
CA7A
CA7B
CA6B
CA5B
CA4B
CA3B
CA2B
CA1B
CA0B
CC0A
CC1A
CC2A
CC3A
CC4A
CC5A
CC6A
CC7A
CC7B
CC6B
CC5B
CC4B
CC3B
CC2B
CC1B
CC0B
A 9.0
L 10.0
C 9.0
M 10.0
B 9.0
D 9.0
L03X+
L00X+
L04X+
L01X+
L05X+
L02X+
RXXX-
SDIS
SPARE
E1
E2
E3
DRIVER LOGIC
21101
C
9IC0346
SCALE —
SHEET 7.0

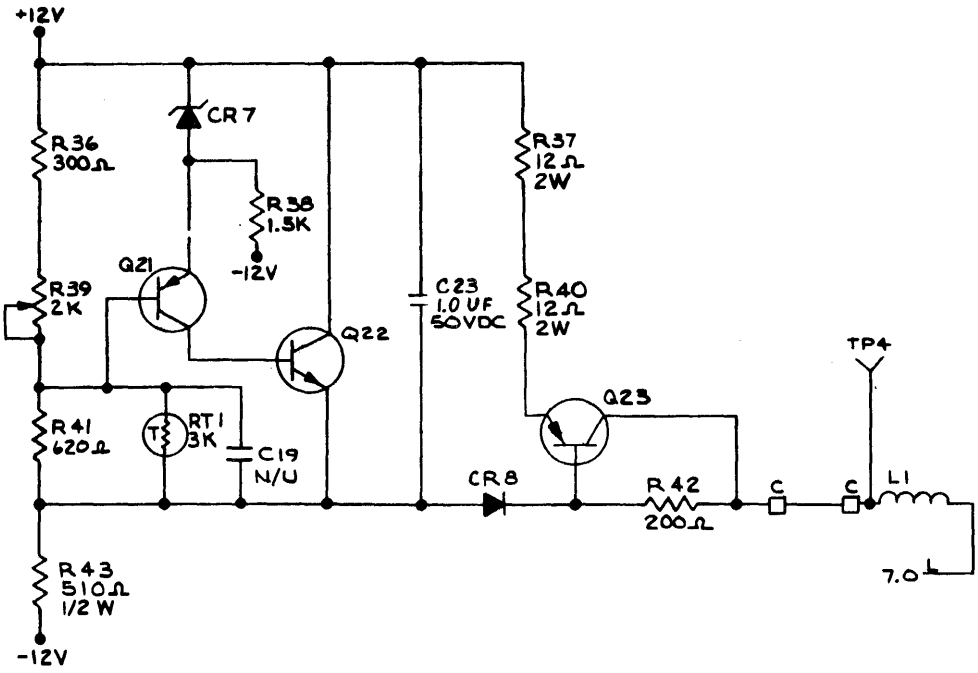

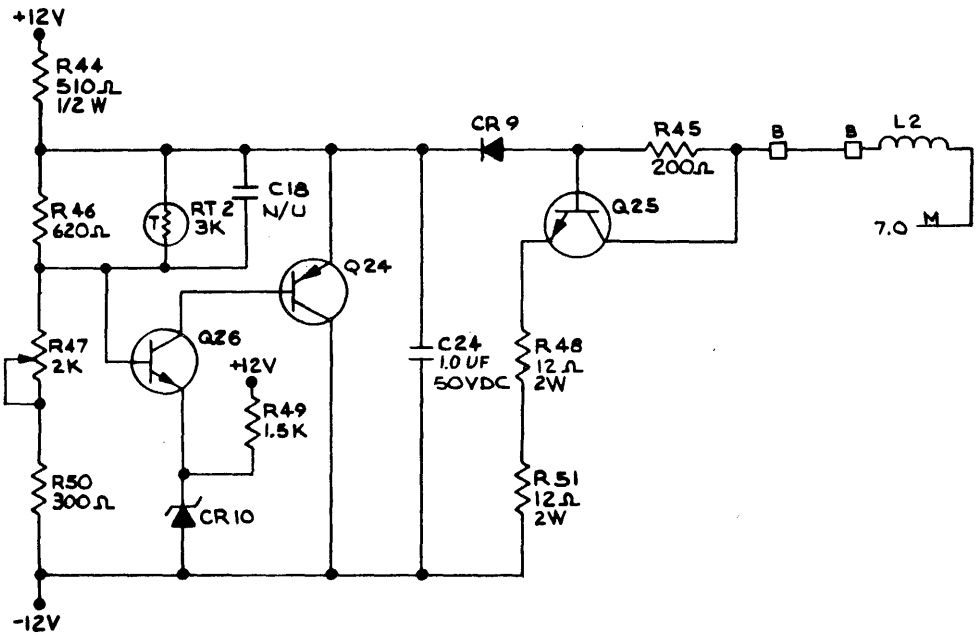

CURRENT SOURCES

CODE IDENT NO.	SIZE	DWG NO	REV
21101	C	91C0346	C
SCALE —			SHEET 10.0

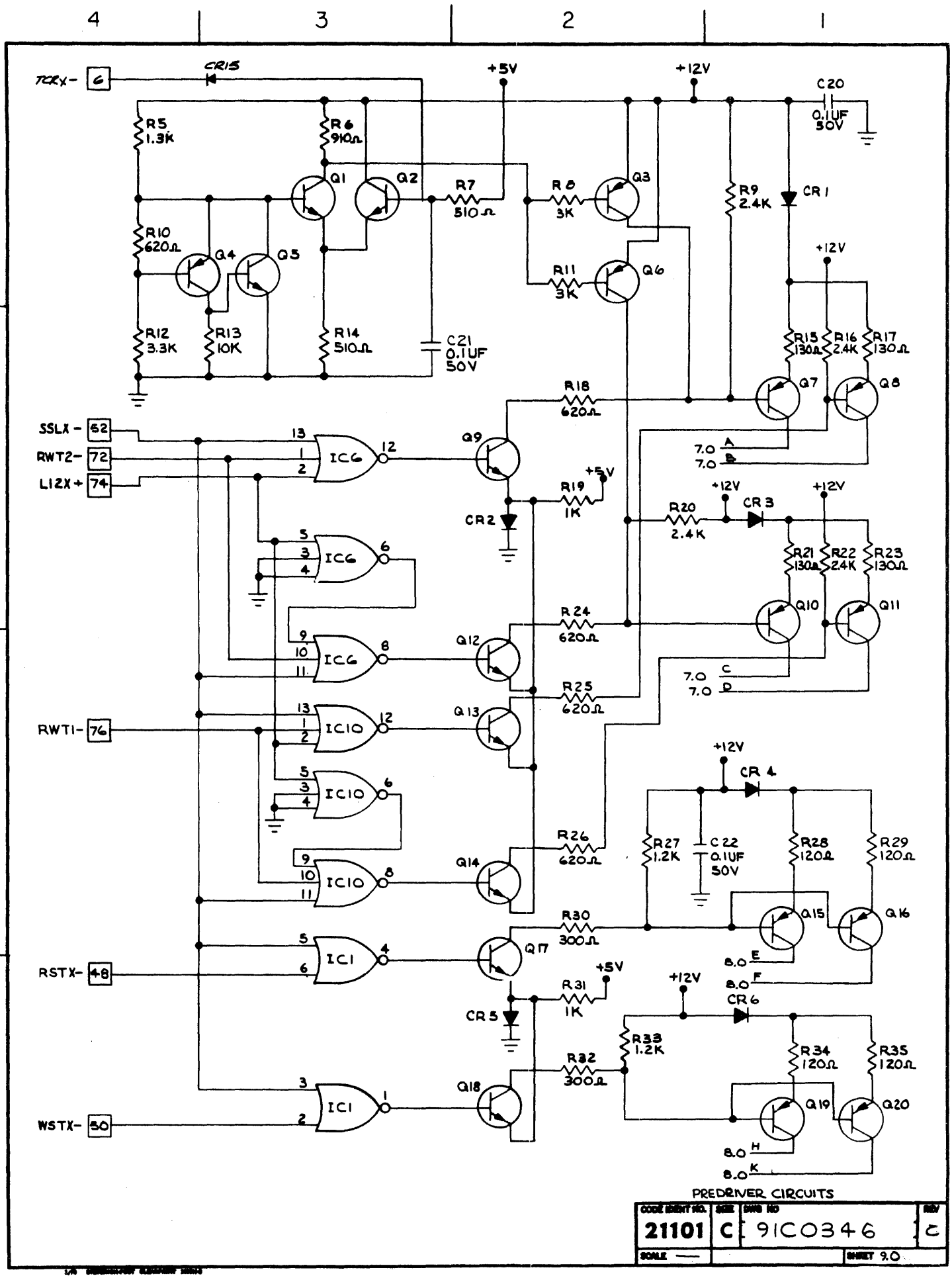
4
3
2
1
D
C
B
A
TCRX-
6
CR15
+5V
+12V
C20
0.1UF
50V
R5
1.3K
R6
910Ω
Q1
Q2
R7
510Ω
R8
3K
Q3
R9
2.4K
CR1
R10
620Ω
Q4
Q5
R11
3K
Q6
+12V
R12
3.3K
R13
10K
R14
510Ω
C21
0.1UF
50V
R15
130Ω
R16
2.4K
R17
130Ω
Q7
Q8
R18
620Ω
SSLX-
62
RWT2-
72
L12X+
74
IC6
Q9
7.0 A
7.0 B
+5V
R19
1K
CR2
+12V
R20
2.4K
CR3
+12V
R21
130Ω
R22
2.4K
R23
130Ω
Q10
Q11
R24
620Ω
Q12
7.0 C
7.0 D
R25
620Ω
RWT1-
76
IC10
Q13
+12V
CR4
R26
620Ω
R27
1.2K
C22
0.1UF
50V
R28
120Ω
R29
120Ω
Q14
Q15
Q16
R30
300Ω
RSTX-
48
IC1
Q17
8.0 E
8.0 F
+5V
R31
1K
CR5
+12V
CR6
R33
1.2K
R34
120Ω
R35
120Ω
R32
300Ω
WSTX-
50
Q18
Q19
Q20
8.0 H
8.0 K
PREDRIVER CIRCUITS
CODE IDENT NO.
21101
SIZE
C
DWG NO
91C0346
REV
C
SCALE —
SHEET 9.0

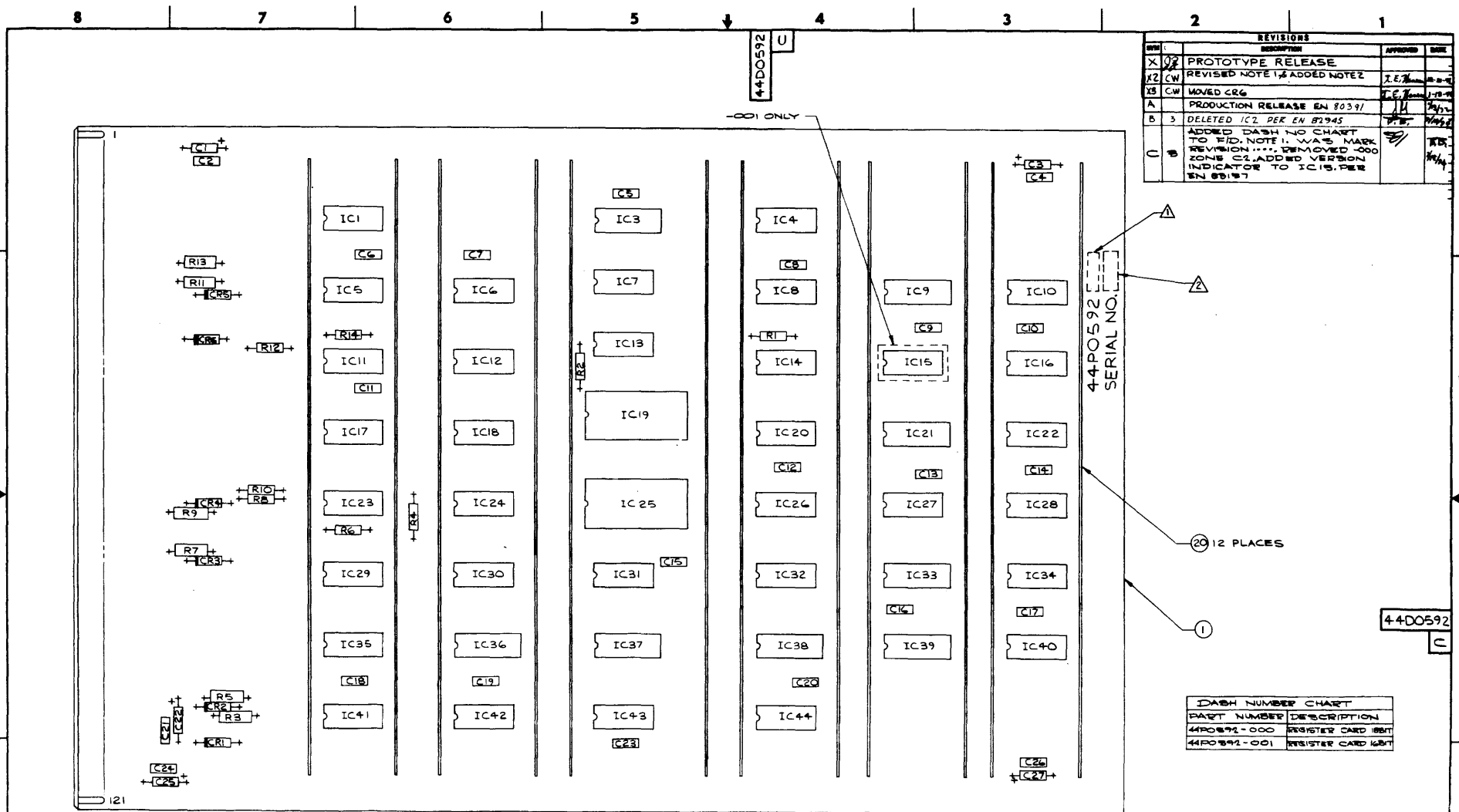

REVISIONS				
ZONE	LTR	DESCRIPTION	APPROVED	DATE
	X	PROTOTYPE RELEASE		
	X2	REVISED NOTE 1, & ADDED NOTE 2		
	X3	MOVED CR6		
	A	PRODUCTION RELEASE EN 80391		
	B	DELETED IC2 PER EN 87945		
	C	ADDED DASH NO CHART TO F/D. NOTE 1. WAS MARK REVISION ..... REMOVED -000 ZONE C2, ADDED VERSION INDICATOR TO IC15. PER EN 88197		

DASH NUMBER CHART	
PART NUMBER	DESCRIPTION
44P0592-000	REGISTER CARD 16BIT
44P0592-001	REGISTER CARD 16BIT

FOR PARTS LIST SEE 44P0592

REFERENCE DRAWINGS

40D0505	PW BOARD
97D0696	SOLDER MASK
97D0695	SILKSCREEN
97D0694	ARTWORK
91D0356	LOGIC DIAGRAM

2 MARK SERIAL NO. WHERE SHOWN USING .12 HIGH PERMANENT CHARACTERS.

1 MARK APPLICABLE DASH NO OF PARTS LIST TO WHICH PART WAS MANUFACTURED APPROX. WHERE SHOWN. IDENTIFICATION TO BE .12 HIGH CHARACTERS AND PERMANENT.

NOTE: UNLESS OTHERWISE SPECIFIED

MODEL NO. 620/L-100
NEXT ASSY 01P1277
MATERIAL
FINISH
DIMENSIONS ARE IN INCHES AND AFTER FINISHING
TOLERANCES UNLESS OTHERWISE SPECIFIED
X ±1
XX ±.02
XXX ±.005
ANGLES ±0.5°
BREAK ALL SHARP EDGES .010 R APPROX
DO NOT SCALE DRAWING
DR 11/16/71
CHK 1/12/72
DSGN 11/16/71
ENGR 1-13-72
APPD
APPD
THIS DOCUMENT MAY CONTAIN PROPRIETARY INFORMATION AND SUCH INFORMATION MAY NOT BE DISCLOSED TO OTHERS FOR ANY PURPOSE OR USED TO PRODUCE THE ARTICLE OR SUBJECT IN WHOLE OR IN PART WITHOUT WRITTEN PERMISSION FROM VDM

TITLE
REGISTER CARD
ASSY DM336

CODE IDENT NO. 21101 | SIZE D | DWG NO 44D0592 | REV C

SCALE 2/1 | SHEET 1 OF 1

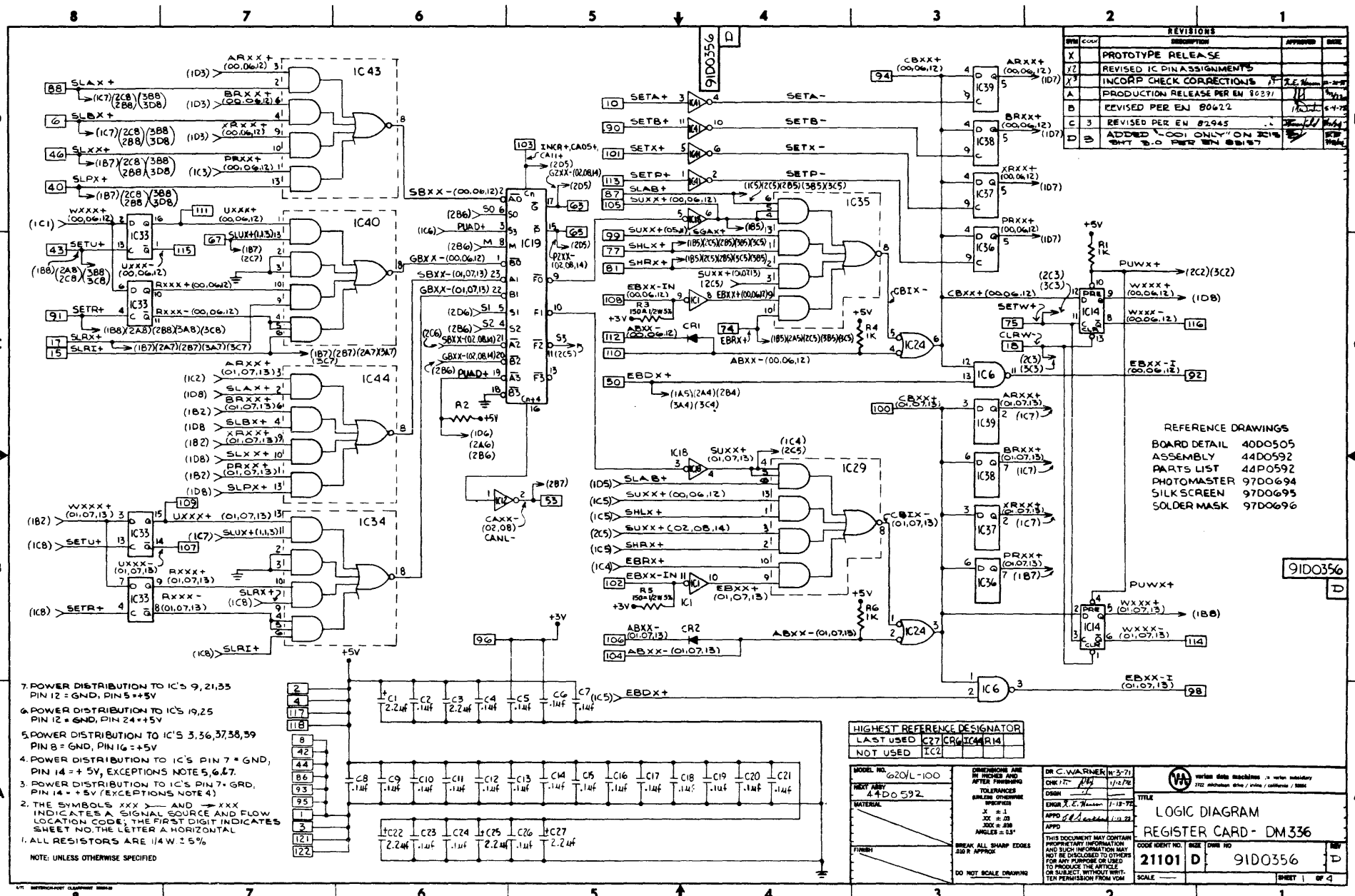

SYM	COM	REVISIONS DESCRIPTION	APPROVED	DATE
X		PROTOTYPE RELEASE		
X1		REVISED IC PIN ASSIGNMENTS		
X2		INCORP CHECK CORRECTIONS	J.E.N.	11-29-71
A		PRODUCTION RELEASE PER EN 80391		5-1-72
B		REVISED PER EN 80622		6-1-72
C	3	REVISED PER EN 82945		
D	3	ADDED "-001 ONLY" ON IC18 SHT 2.0 PER EN 88187		

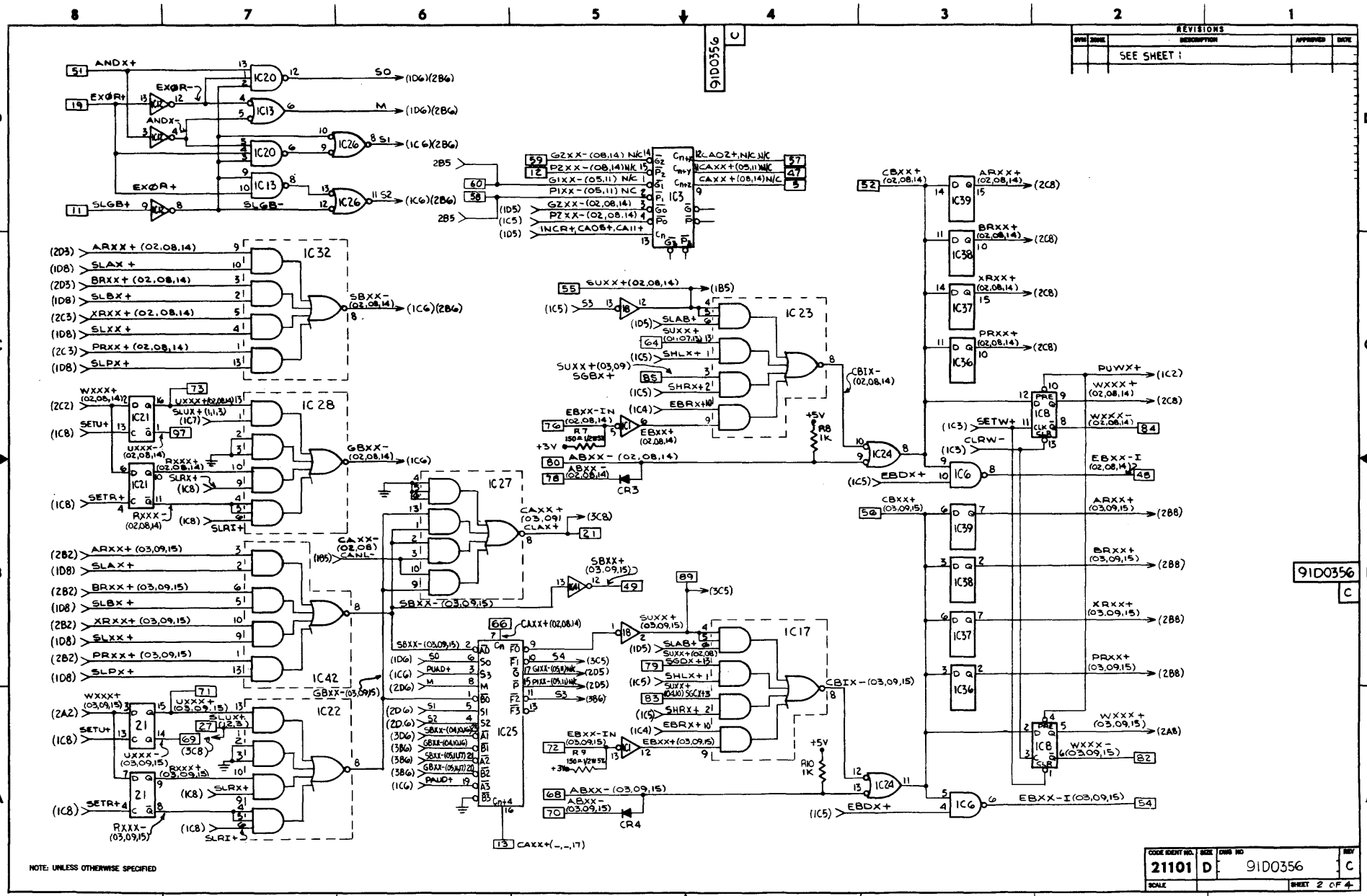
91D0356 C
REVISIONS
SEE SHEET 1
ANDX+
EXOR+
EXOR-
ANDX-
EXOR+
SLGB+
SLGB-
IC20
IC13
IC26
SO
M
SI
S2
IC32
IC28
IC27
IC42
IC22
IC21
IC23
IC24
IC17
IC25
IC3
IC39
IC38
IC37
IC36
IC8
IC6
SBXX-(02,08,14)
GBXX-(02,08,14)
CAXX+(03,09)
SBXX-(03,09,15)
GBXX-(03,09,15)
CBIX-(02,08,14)
CBIX-(03,09,15)
EBXX-IN
EBXX+
ABXX-
CR3
CR4
+5V
R7 150Ω 1/2W 5%
R8 1K
R10 1K
+3V
EBXX-I(02,08,14)
EBXX-I(03,09,15)
PUWX+
WXXX+(02,08,14)
WXXX-(02,08,14)
WXXX+(03,09,15)
WXXX-(03,09,15)
ARXX+(02,08,14)
BRXX+(02,08,14)
XRXX+(02,08,14)
PRXX+(02,08,14)
ARXX+(03,09,15)
BRXX+(03,09,15)
XRXX+(03,09,15)
PRXX+(03,09,15)
SETW+
CLRW-
SETU+
SETR+
SLAB+
SHLX+
SHRX+
EBRX+
SLAX+
SLBX+
SLXX+
SLRX+
SLRI+
SLUX+
SLUX+(1,1,3)
SLUX+(03,09,15)
SUXX+(02,08,14)
SUXX+(03,09)
SUXX+(03,09,15)
SGBX+
SSBX+
SSDX+
SSCX+
CAXX+(02,08,14)
CAXX+(03,09,15)
CAXX+(-,-,17)
CANL-
PUAD+
WXXX+(03,09,15)
WXXX+(2A2)
WXXX+(2A8)
WXXX-(03,09,15)
WXXX-(82)
WXXX-(84)
EBXX-I(03,09,15)
EBXX-I(03,09,15)
EBXX-I(48)
EBXX-I(54)
ARXX+(2C8)
BRXX+(2C8)
XRXX+(2C8)
PRXX+(2C8)
ARXX+(2B8)
BRXX+(2B8)
XRXX+(2B8)
PRXX+(2B8)
SBXX+(03,09,15)
SBXX-(03,09,15)
GBXX-(03,09,15)
CBXX+(02,08,14)
CBXX+(03,09,15)
SUXX+(02,08,14)
SUXX+(03,09)
SUXX+(03,09,15)
SGBX+
SSBX+
SSDX+
SSCX+
CAXX+(03,09)
CLAX+
CANL-
PUAD+
ABXX-(02,08,14)
ABXX-(03,09,15)
EBXX+(02,08,14)
EBXX+(03,09,15)
EBDX+
SHLX+
SHRX+
EBRX+
SLUX+(03,09,15)
SLUX+(1,1,3)
SLUX+(2,3)
SLUX+(03,09,15)
SBXX-(03,09,15)
GBXX-(03,09,15)
CBIX-(02,08,14)
CBIX-(03,09,15)
CAXX+(02,08,14)
CAXX+(03,09,15)
CAXX+(-,-,17)

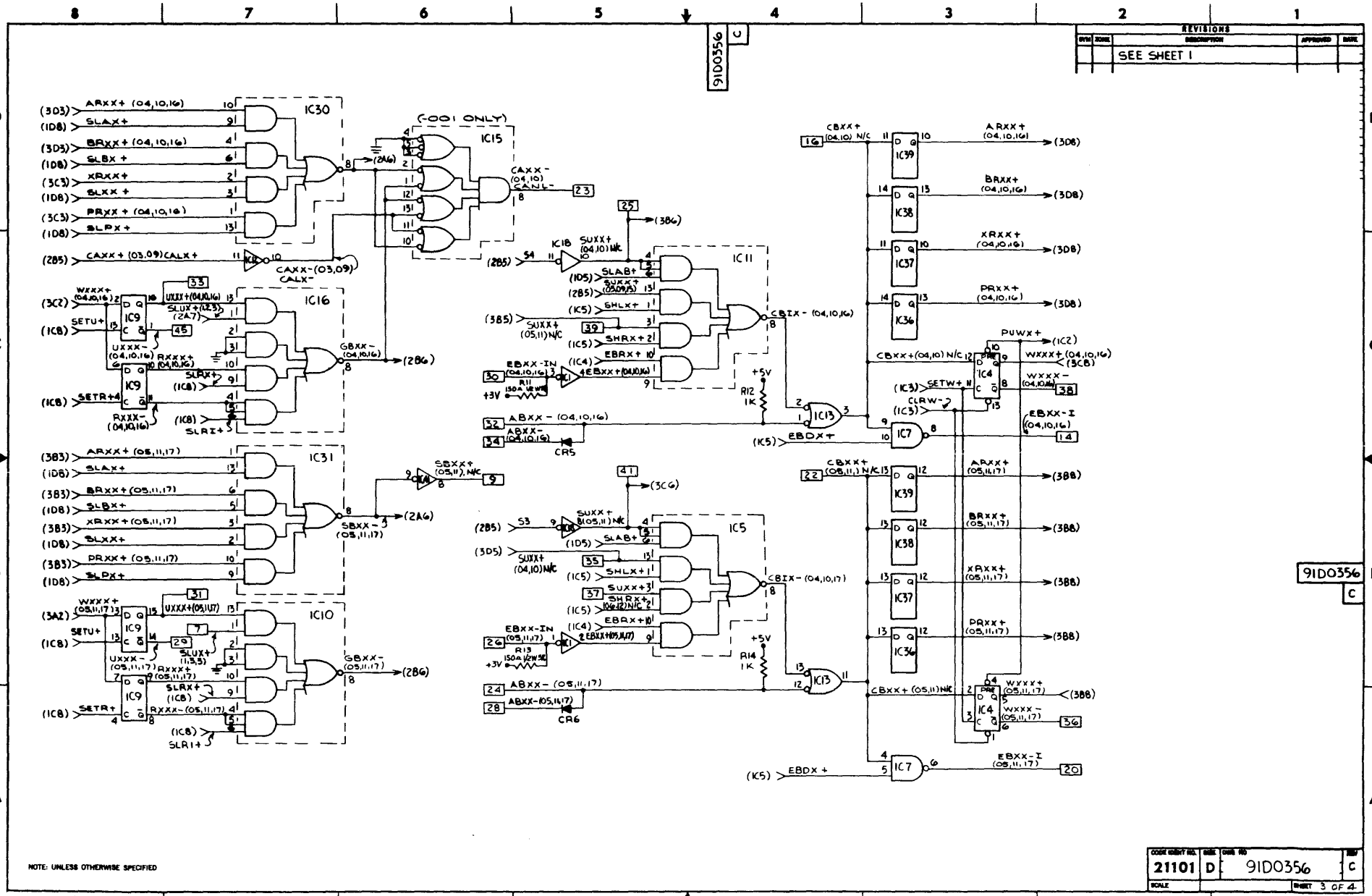

NOTE: UNLESS OTHERWISE SPECIFIED

CODE IDENT NO.	SIZE	DWG NO	REV
21101	D	91D0356	C
SCALE		SHEET 3 OF 4	

REVISIONS				
SYM	ZONE	DESCRIPTION	APPROVED	DATE
		SEE SHEET 1		

1	GRD	→ 1A7	
2	+5V	→ 1B7	
3	GRD	→ 1A7	
4	+5V	→ 1A7	
5	CAXX+(08,14)N/C	→ 2D4	
6	SLBX+	→ 1D8	
7	SLUX+ (1,2,3)	→ 3B7	
8	GRD	→	
3B6 >	SBXX+ (05,11)N/C	9	
10	SETA+	→ 1D5	
11	SLGB+	→ 2D8	
12	P2XX-(08,14,) N/C	→ 2D5	
3A5 >	CAXX+(_,_,17)	13	
3C2 >	EBXX-I (04,10,16)	14	
15	SLRI+	→ 1C8	
16	CBXX+ (04,10)N/C	→ 3D4	
17	SLRX+	→ 1C8	
18	CLRW-	→ 1C2	
19	EXØR+	→ 2D8	
20	EBXX-I (05,11,17)	→ 3A2	
2B5 >	CAXX+(03,09)CLAX+	21	
22	CBXX+ (05,11) N/C	→ 3B4	
3D5 >	CAXX-(04,10),CANL-	23	
24	ABXX- (05,11,17)	→ 3A6	
25	SUXX+ (04,10) N/C	→ 3D5	
26	EBXX-IN (05,11,17)	→ 3B6	
27	SLUX+(1,2,3)	→ 2A7	
28	ABXX-(05,11,17)	→ 3A6	
3B7 >	UXXX- (05,11,17)	29	
30	EBXX-IN (04,10,16)	→ 3C6	
3B7 >	UXXX+ (05,11,17)	31	

32	ABXX- (04,10,16)	→ 3C6	
3C7 >	UXXX+ (04,10,16)	33	
34	ABXX-(04,10,16)	→ 3C6	
35	SUXX+ (04,10) N/C	→ 3B5	
3A2 >	WXXX- (05,11,17)	36	
37	SUXX+	→ 3B5	
3C2 >	WXXX-(04,10,16)	38	
39	SUXX+ (05,11,) N/C	→ 3C5	
40	SLPX+	→ 1D8	
41	SUXX+ (05,11) N/C	→ 3B5	
42	GRD	→	
43	SETU+	→ 1C8	
44	GRD	→	
3C7 >	UXXX-(04,10,16)	45	
46	SLXX+	→ 1D8	
47	CAXX+(05,11,) N/C	→ 2D4	
2B2 >	EBXX-I (02,08,14)	48	
2A6 >	SBXX+ (03,09,15)	49	
50	EBDX+	→ 1C5	
51	ANDX+	→ 2D8	
52	CBXX+ (02,08,14)	→ 2D3	
1C5 >	CAXX-,(02,08)CANL-	53	
2A2 >	EBXX-I (03,09,15)	54	
55	SUXX+(02,08,14)	→ 2C5	
56	CBXX+ (03,09,15)	→ 2B8	
57	CAO2+ N/C,N/C	→ 2B3	
58	P1XX-(05,11) NC	→ 2D6	
59	G2XX-(08,14)N/C	→ 2D5	
60	G1XX-(05,11) NC	→ 2D6	
61			
62			

63	G2XX-(02,08,14)	→ (1D5)	
64	SUXX+	→ (1B4)	
65	P2XX-(02,08,14)	→ (1C5)	
66	CAXX+(02,08,14)	→ (2B6)	
67	SLUX+(1,2,3)	→ 1D7	
68	ABXX-(03,09,15)	→ 2A5	
2A7 >	UXXX-(03,09,15)	69	
70	ABXX-(03,09,15)	→ 2A5	
2A7 >	UXXX+ (03,09,15)	71	
72	EBXX-IN (03,09,15)	→ 2A5	
2C7 >	UXXX+(02,08,14)	73	
74	EBRX+	→ 1C4	
75	SETW+	→ 1C2	
76	EBXX-IN (02,08,14)	→ 2C5	
77	SHLX+	→ 1C5	
78	ABXX-(02,08,14)	→ 2C5	
79	SUXX+(02,08)SGDX+	→	
80	ABXX-(02,08,14)	→ 2B5	
81	SHRX+	→ 1C5	
2A2 >	WXXX-(03,09,15)	82	
83	SUXX+(04,10)SGCX+	→ 2A5	
2C2 >	WXXX-(02,08,14)	84	
85	SUXX+(03,09)SGBX+	→ 2C5	
86	GRD	→	
87	SLAB+	→ 1D5	
88	SLAX+	→ 1D8	
89	SUXX+(03,09,15)	→ 2C5	
90	SETB+	→ 1D5	
91	SETR+	→ 1C8	
1C1 >	EBXX-I (00,06,12)	92	

93	GRD	→	
94	CBXX+(00,06,12)	→ 1D3	
95	GRD	→	
96	+3V	→ 1B6	
2C7 >	UXXX-(02,08,14)	97	
1A1 >	EBXX-I (01,07,13)	98	
99	SUXX+(05,11) SGAX+	→ 1C5	
100	CBXX+(01,07,13)	→ 1C3	
101	SETX+	→ 1D5	
102	EBXX-IN	→ 1B5	
103	INCR+,CA05+,CA11+	→ 1D5	
104	ABXX-(01,07,13)	→ 1B5	
105	SUXX+ (00,06,12)	→ 1D5	
106	ABXX-(01,07,13)	→ 1B5	
1B7 >	UXXX-(01,07,13)	107	
108	EBXX-IN (00,06,12)	→ 1C5	
1B7 >	UXXX+ (01,07,13)	109	
110	ABXX-(00,06,12)	→ 1C5	
1D7 >	UXXX+ (00,06,12)	111	
112	ABXX-(00,06,12)	→ 1C5	
113	SETP+	→ 1D5	
1B1 >	WXXX-(01,07,13)	114	
1D7 >	UXXX-(00,06,12)	115	
1C1 >	WXXX-(00,06,12)	116	
117	+5V	→ 1A7	
118	+5V	→ 1A7	
119			
120			
121	GRD	→ 1A7	
122	GRD	→ 1A7	

NOTE: UNLESS OTHERWISE SPECIFIED

CODE IDENT NO.	SIZE	DWG NO	REV
21101	D	91D0356	C
SCALE		SHEET 4 OF 4	

CAUTION: EN 82268
AFFECTS THIS DWG.

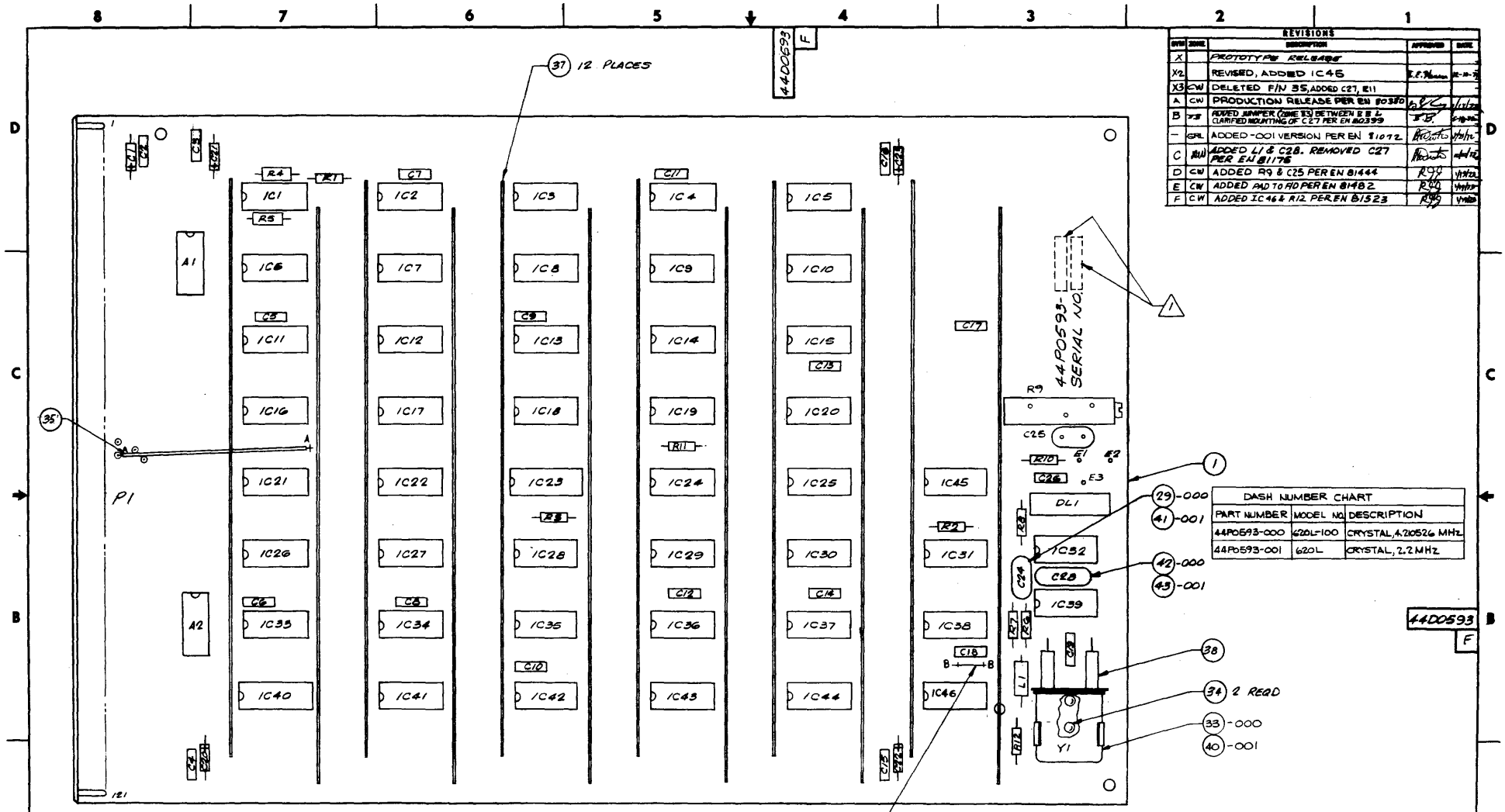

REVISIONS				
SYM	ZONE	DESCRIPTION	APPROVED	DATE
X		PROTOTYPE RELEASE		
X2		REVISED, ADDED IC45	[illegible]	[illegible]
X3	CW	DELETED F/N 35, ADDED C27, E11		
A	CW	PRODUCTION RELEASE PER EN 80380	[illegible]	[illegible]
B	[illegible]	ADDED JUMPER (ZONE 33) BETWEEN E & L CLARIFIED MOUNTING OF C27 PER EN 80399	[illegible]	[illegible]
—	GRL	ADDED -001 VERSION PER EN 81072	[illegible]	[illegible]
C	[illegible]	ADDED L1 & C28. REMOVED C27 PER EN 81176	[illegible]	[illegible]
D	CW	ADDED R9 & C25 PER EN 81444	[illegible]	[illegible]
E	CW	ADDED PAD TO F/D PER EN 81482	[illegible]	[illegible]
F	CW	ADDED IC46 & R12 PER EN 81523	[illegible]	[illegible]

DASH NUMBER CHART		
PART NUMBER	MODEL NO.	DESCRIPTION
44P0593-000	620L-100	CRYSTAL, 4.210526 MHz
44P0593-001	620L	CRYSTAL, 2.2 MHz

44D0593 F

FOR PARTS LIST SEE 44P0593

~~2. NOTATION N/U DENOTES COMPONENT NOT USED~~

1. MARK APPROPRIATE DASH NUMBER AND THE REVISION LETTER OF THE PARTS LIST TO WHICH THE PART WAS MANUFACTURED AND SERIAL NO. APPROXIMATELY WHERE SHOWN. IDENTIFICATION TO BE .12 HIGH CHARACTERS, PERMANENT AND LEGIBLE.

NOTE: UNLESS OTHERWISE SPECIFIED

REFERENCE DRAWINGS

4000606 — PW BOARD
9100357 — LOGIC DIAGRAM
9700697 — ARTWORK
9700698 — SILKSCREEN
9700699 — SOLDER MASK

MODEL NO. 620L-100
NEXT ASSY 01A1277
MATERIAL
FINISH

DIMENSIONS ARE IN INCHES AND AFTER FINISHING
TOLERANCES (UNLESS OTHERWISE SPECIFIED)
.X ± .1
.XX ± .03
.XXX ± .010
ANGLES ± 0.5°
BREAK ALL SHARP EDGES .010 R APPROX
DO NOT SCALE DRAWING

DR [illegible] 11/18/71
CHK WMD 12/9/71
DSGN [illegible] 11/18/71
ENGR [illegible] 1-10-72
APPD [illegible] 1-11-72
APPD

THIS DOCUMENT MAY CONTAIN PROPRIETARY INFORMATION AND SUCH INFORMATION MAY NOT BE DISCLOSED TO OTHERS FOR ANY PURPOSE OR USED TO PRODUCE THE ARTICLE OR SUBJECT, WITHOUT WRITTEN PERMISSION FROM VDM

varian data machines / a varian subsidiary
2722 michelson drive / irvine / california / 92664

TITLE
PROCESSOR CONTROL
NO. 4 ASSY DM337

CODE IDENT NO. 21101 | SIZE D | DWG NO 44D0593 | REV F
SCALE 2/1 | SHEET 1 OF 1

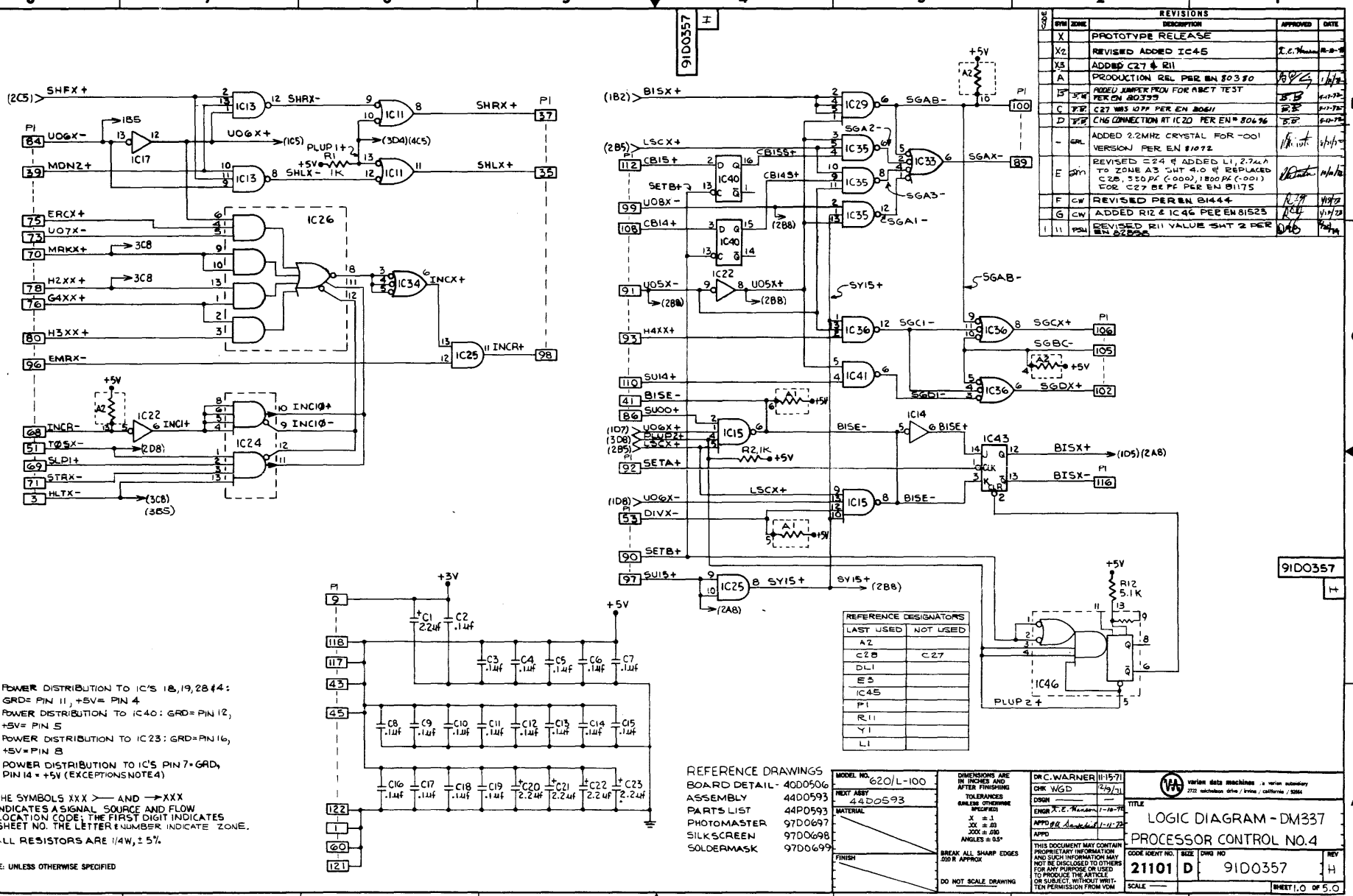

CODE	SYM	ZONE	REVISIONS DESCRIPTION	APPROVED	DATE
	X		PROTOTYPE RELEASE		
	X2		REVISED ADDED IC45	I.C.W.	8-8-71
	X3		ADDED C27 & R11		
	A		PRODUCTION REL PER EN 80380	WGD	1/6/72
	B	S.W.	ADDED JUMPER PROM FOR ABCT TEST PER EN 80399	S.W.	4-17-72
	C	P.B.	C27 WAS 10PF PER EN 80611	P.B.	5-17-72
	D	P.B.	CHG CONNECTION AT IC20 PER EN# 80696	S.D.	6-12-72
	-	GRL	ADDED 2.2MHz CRYSTAL FOR -001 VERSION PER EN 81072		8/15/72
	E	SM	REVISED C24 & ADDED L1, 2.7µH TO ZONE A3 SHT 4.0 & REPLACED C28, 330PF (-0002), 1800PF (-001) FOR C27 BE PF PER EN 81175		10/6/72
	F	CW	REVISED PER EN 81444	R.Z.F.	11/8/72
	G	CW	ADDED R12 & IC46 PER EN 81523	I.C.W.	1/19/73
1	11	PSH	REVISED R11 VALUE SHT 2 PER EN 82808	WGD	7/24/73

4. POWER DISTRIBUTION TO IC'S 18,19,28 & 44: GRD= PIN 11, +5V= PIN 4
   POWER DISTRIBUTION TO IC40: GRD= PIN 12, +5V= PIN 5
   POWER DISTRIBUTION TO IC23: GRD=PIN 16, +5V=PIN 8
3. POWER DISTRIBUTION TO IC'S PIN 7=GRD, PIN 14 = +5V (EXCEPTIONS NOTE 4)
2. THE SYMBOLS XXX >—— AND ——>XXX INDICATES A SIGNAL SOURCE AND FLOW LOCATION CODE; THE FIRST DIGIT INDICATES SHEET NO. THE LETTER & NUMBER INDICATE ZONE.
1. ALL RESISTORS ARE 1/4W, ± 5%

NOTE: UNLESS OTHERWISE SPECIFIED

REFERENCE DESIGNATORS	
LAST USED	NOT USED
A2	
C28	C27
DL1	
E3	
IC45	
P1	
R11	
Y1	
L1	

REFERENCE DRAWINGS

BOARD DETAIL -	40D0506
ASSEMBLY	44D0593
PARTS LIST	44P0593
PHOTOMASTER	97D0697
SILKSCREEN	97D0698
SOLDERMASK	97D0699

MODEL NO. 620/L-100
NEXT ASSY 44D0593
MATERIAL
FINISH

DIMENSIONS ARE IN INCHES AND AFTER FINISHING
TOLERANCES (UNLESS OTHERWISE SPECIFIED)
X ±.1
.XX ±.03
.XXX ±.010
ANGLES ± 0.5°
BREAK ALL SHARP EDGES .010 R APPROX
DO NOT SCALE DRAWING

DR C. WARNER 11-15-71
CHK WGD 2/9/71
DSGN
ENGR I.C. Warner 1-10-72
APPD W.G. Davis 1-11-72
APPD

THIS DOCUMENT MAY CONTAIN PROPRIETARY INFORMATION AND SUCH INFORMATION MAY NOT BE DISCLOSED TO OTHERS FOR ANY PURPOSE OR USED TO PRODUCE THE ARTICLE OR SUBJECT, WITHOUT WRITTEN PERMISSION FROM VDM

varian data machines, a varian subsidiary
2722 michelson drive / irvine / california / 92664

TITLE
LOGIC DIAGRAM - DM337
PROCESSOR CONTROL NO.4

CODE IDENT NO.	SIZE	DWG NO	REV
21101	D	91D0357	H

SCALE —— SHEET 1.0 OF 5.0

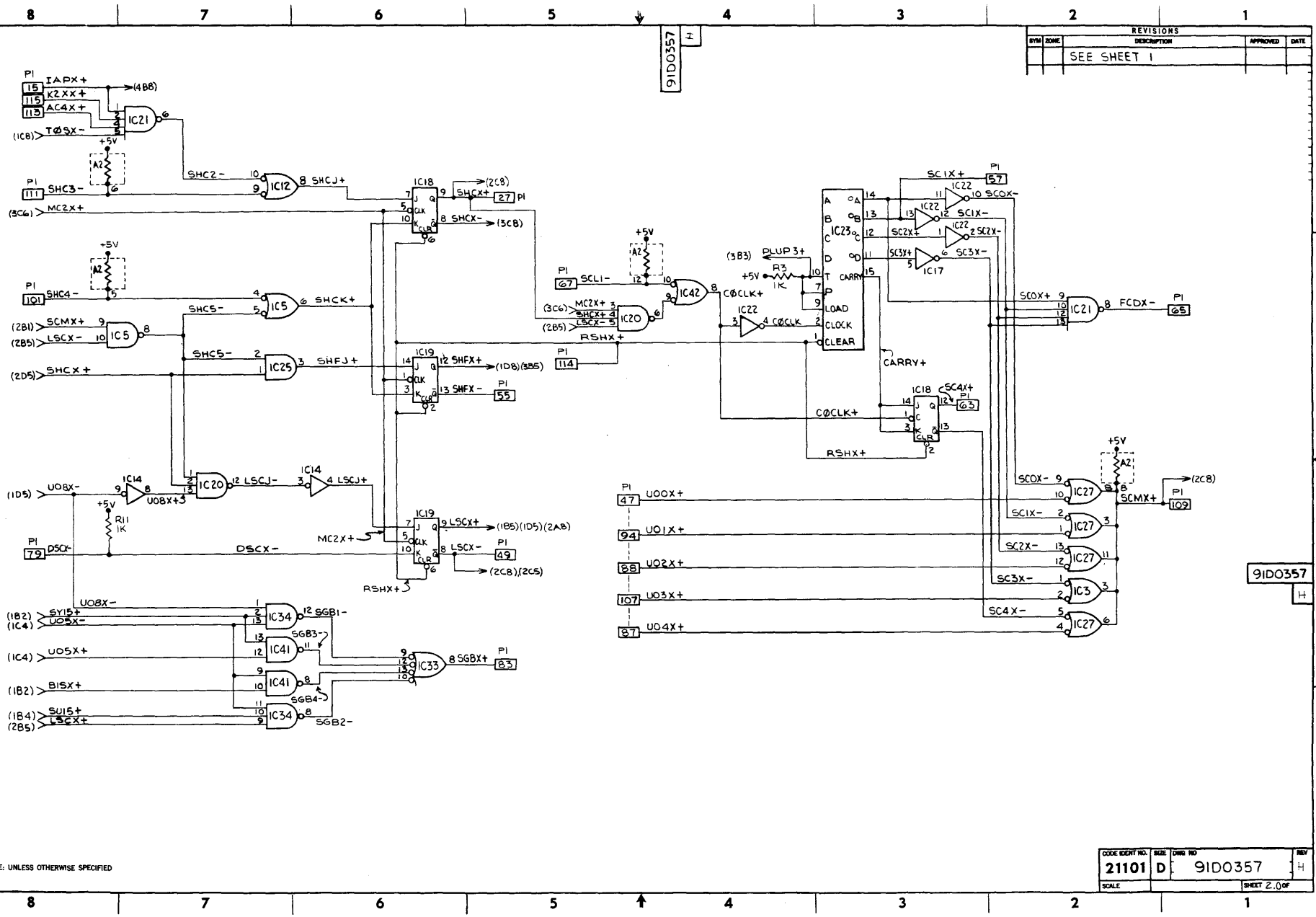
91D0357 H
REVISIONS
SYM | ZONE | DESCRIPTION | APPROVED | DATE
SEE SHEET 1
P1 15 IAPX+ (4B8)
115 XZXX+
115 AC4X+
(1C8) TØSX-
IC21
+5V
A2
P1 111 SHC3-
SHC2-
IC12
SHCJ+
IC18
(2C8)
SHCX+ 27 P1
SHCX- (3C8)
(3C6) MC2X+
P1 101 SHC4-
SHC5-
IC5
SHCK+
(2B1) SCMX+
(2B5) LSCX-
IC5
SHC5-
IC25
SHFJ+
(2D5) SHCX+
IC19
SHFX+ (1D8)(3B5)
SHFX- P1 55
P1 67 SCL1-
IC42
(3C6) MC2X+
SHCX+
LSCX-
(2B5)
IC20
RSHX+
P1 114
(3B3) DLUP3+
+5V
R3 1K
CØCLK+
IC22
IC23
A B C D
CARRY LOAD CLOCK CLEAR
CARRY+
SC1X+ P1 57
IC22
SCOX-
SC1X-
SC2X+
SC2X-
SC3X+
IC17
SC3X-
SCOX+
IC21
FCDX- P1 65
IC18
SC4X+ P1 63
CØCLK+
RSHX+
(1D5) UO8X-
IC14
UO8X+
+5V
R11 1K
IC20
LSCJ-
IC14
LSCJ+
P1 79 DSCX+
DSCX-
MC2X+
IC19
LSCX+ (1B5)(1D5)(2A8)
LSCX- P1 49
(2C8),(2C5)
RSHX+
P1 47 UOOX+
94 UO1X+
88 UO2X+
107 UO3X+
87 UO4X+
SCOX- 9
SCIX- 2
SC2X- 13
SC3X- 1
SC4X- 5
IC27
IC3
+5V
A2
(2C8)
SCMX+ P1 109
UO8X-
(1B2) SV15+
(1C4) UO5X-
IC34
SGB1-
SGB3-
IC41
(1C4) UO5X+
IC33
SGBX+ P1 83
IC41
(1B2) B1SX+
SGB4-
(1B4) SV15+
(2B5) LSCX+
IC34
SGB2-
91D0357 B H
NOTE: UNLESS OTHERWISE SPECIFIED
CODE IDENT NO. 21101 | SIZE D | DWG NO 91D0357 | REV H
SCALE | SHEET 2.0 OF

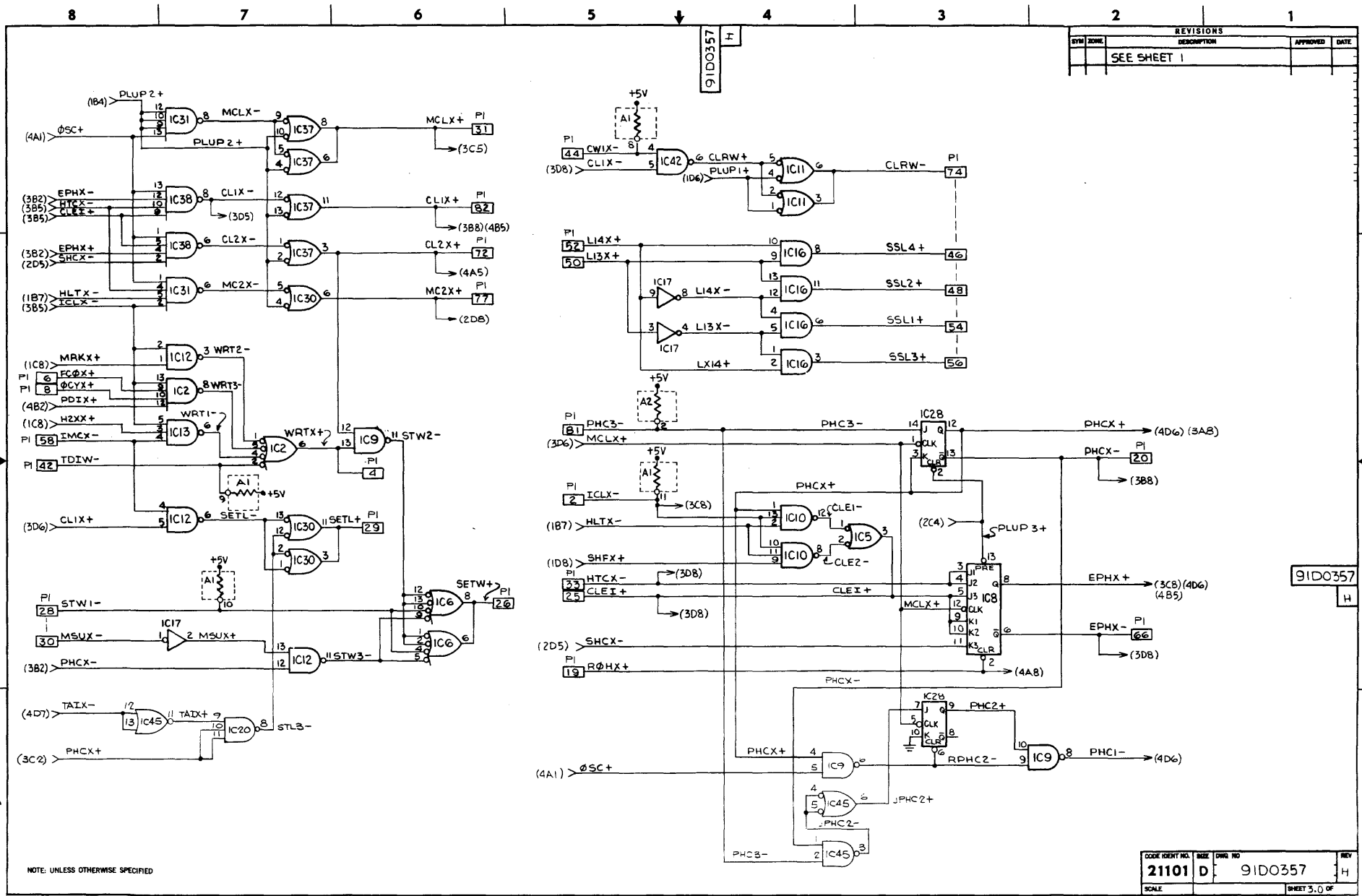
91D0357 H
REVISIONS
SYM | ZONE | DESCRIPTION | APPROVED | DATE
SEE SHEET 1
PLUP2+
MCLX-
MCLX+
CLIX-
CLIX+
CL2X-
CL2X+
MC2X-
MC2X+
EPHX-
HTCX-
CLEI+
EPHX+
SHCX-
HLTX-
ICLX-
MRKX+
FCΦX+
ΦCYX+
PDIX+
H2XX+
IMCX-
TDIW-
WRT1-
WRT2-
WRT3-
WRTX+
STW2-
SETL-
SETL+
CLIX+
STW1-
MSUX-
MSUX+
PHCX-
STW3-
SETW+
TAIX-
TAIX+
STL3-
PHCX+
CWIX-
CLIX-
CLRW+
CLRW-
PLUP1+
LI4X+
LI3X+
LX14+
SSL4+
SSL2+
SSL1+
SSL3+
PHC3-
MCLX+
PHCX+
PHCX-
ICLX-
HLTX-
CLE1-
CLE2-
PLUP3+
SHFX+
HTCX-
CLEI+
MCLX+
EPHX+
EPHX-
SHCX-
RΦHX+
PHC2+
RPHC2-
PHC1-
ØSC+
PHC2+
PHC2-
PHC3-
NOTE: UNLESS OTHERWISE SPECIFIED
CODE IDENT NO. 21101
SIZE D
DWG NO 91D0357
REV H
SCALE
SHEET 3.0 OF

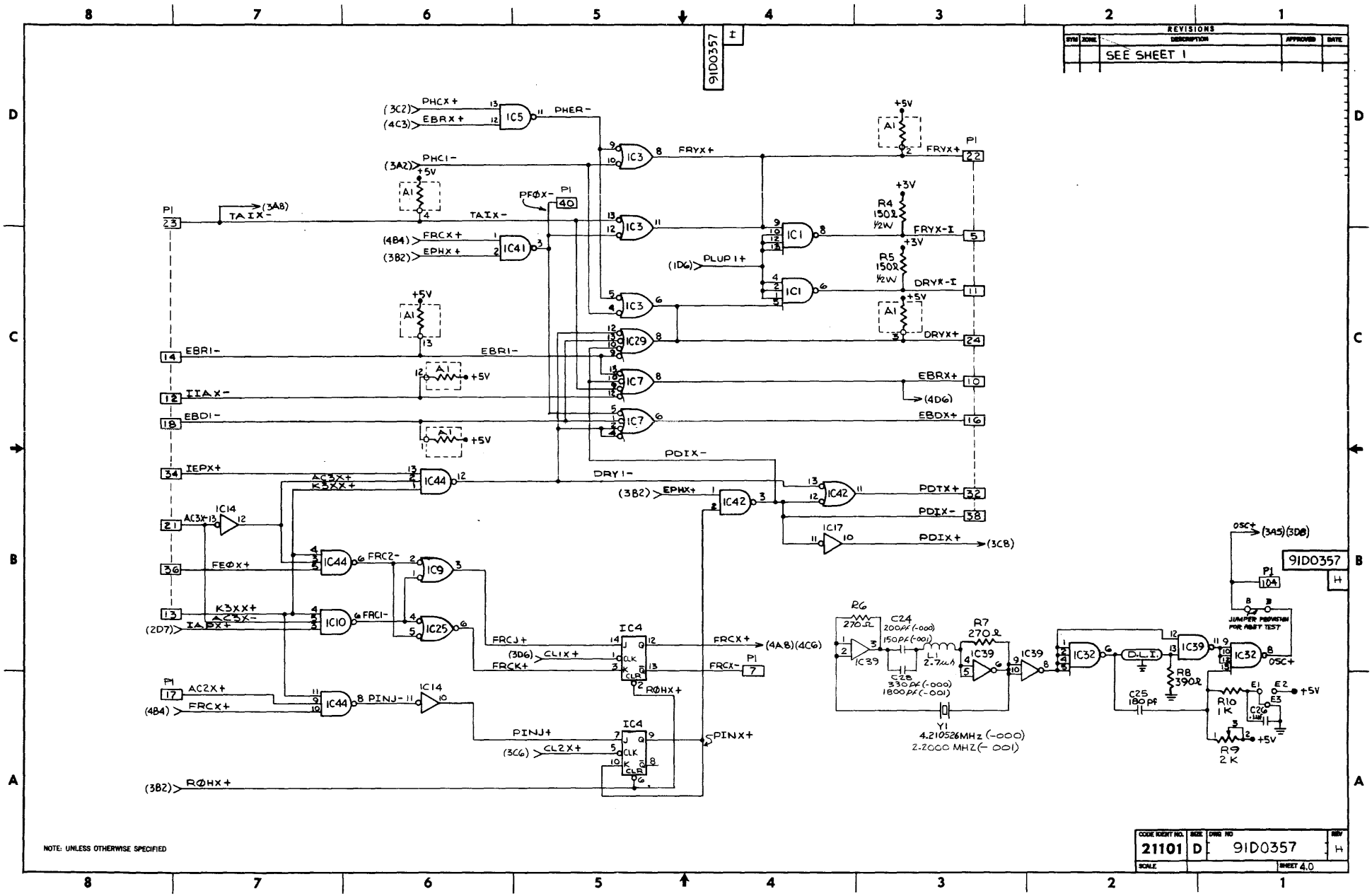

REVISIONS
SYM ZONE DESCRIPTION APPROVED DATE
SEE SHEET 1
91D0357
PHCX+
EBRX+
PHER-
PHC1-
FRYX+
FRYX-I
DRYX-I
DRYX+
EBRX+
EBDX+
PDIX-
PDTX+
PDIX+
TAIX-
PFØX-
FRCX+
EPHX+
PLUP1+
EBR1-
IIAX-
EBD1-
IEPX+
DRY1-
AC3X+
K3XX+
FEØX+
IAPX+
AC2X+
FRCJ+
CL1X+
FRCK+
FRCX-
RØHX+
PINJ+
CL2X+
PINX+
FRC2-
FRC1-
PINJ-
R4 150Ω ½W
R5 150Ω ½W
R6 270Ω
C24 200pf (-000) 150pf (-001)
C28 330pf (-000) 1800pf (-001)
L1 2.7μh
R7 270Ω
Y1 4.210526MHz (-000) 2.2000 MHZ (-001)
R8 390Ω
C25 180pf
R10 1K
R9 2K
C26 .1μf
OSC+
JUMPER PROVISION FOR ABET TEST
NOTE: UNLESS OTHERWISE SPECIFIED
CODE IDENT NO. 21101
SIZE D
DWG NO 91D0357
REV H
SCALE
SHEET 4.0

REVISIONS				
SYM	ZONE	DESCRIPTION	APPROVED	DATE
		SEE SHEET 1		

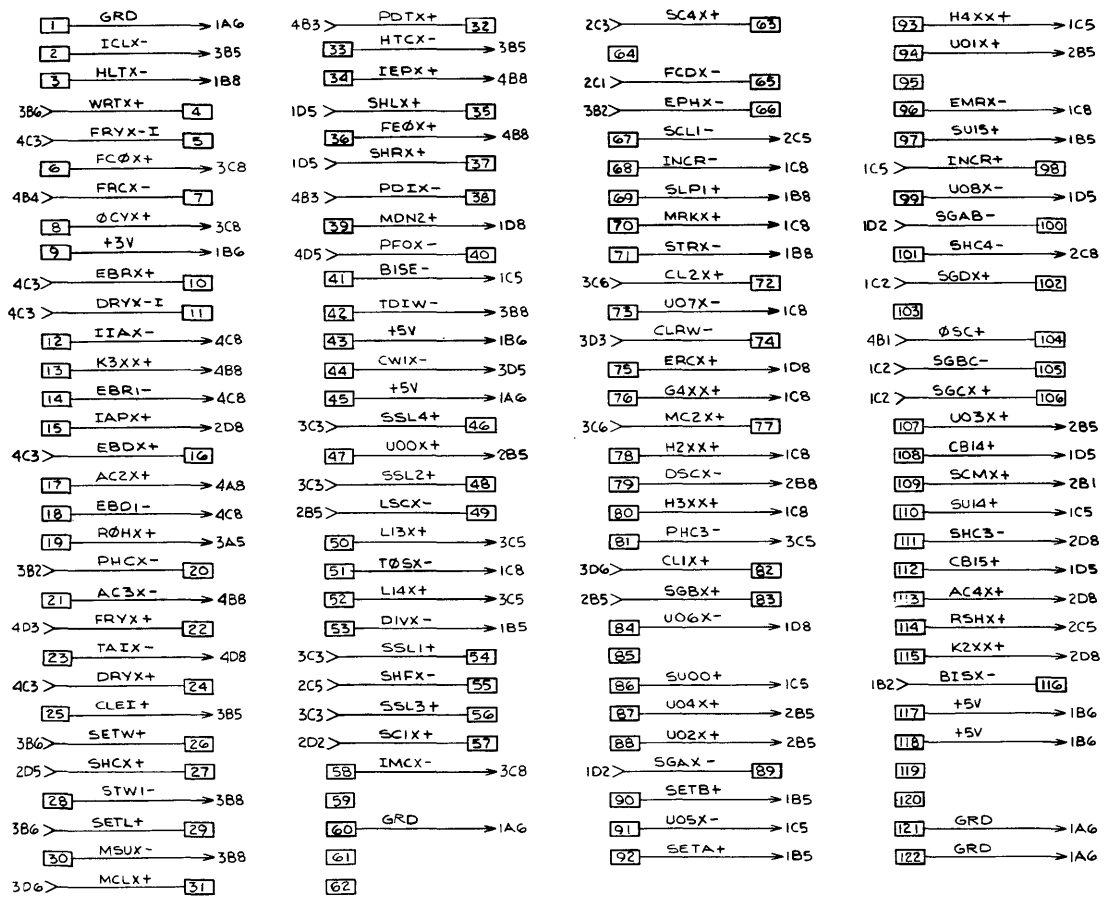

91D0357 H

NOTE: UNLESS OTHERWISE SPECIFIED

CONNECTOR PIN FUNCTIONS

CODE IDENT NO.	SIZE	DWG NO	REV
21101	D	91D0357	H
SCALE		SHEET 5.0	

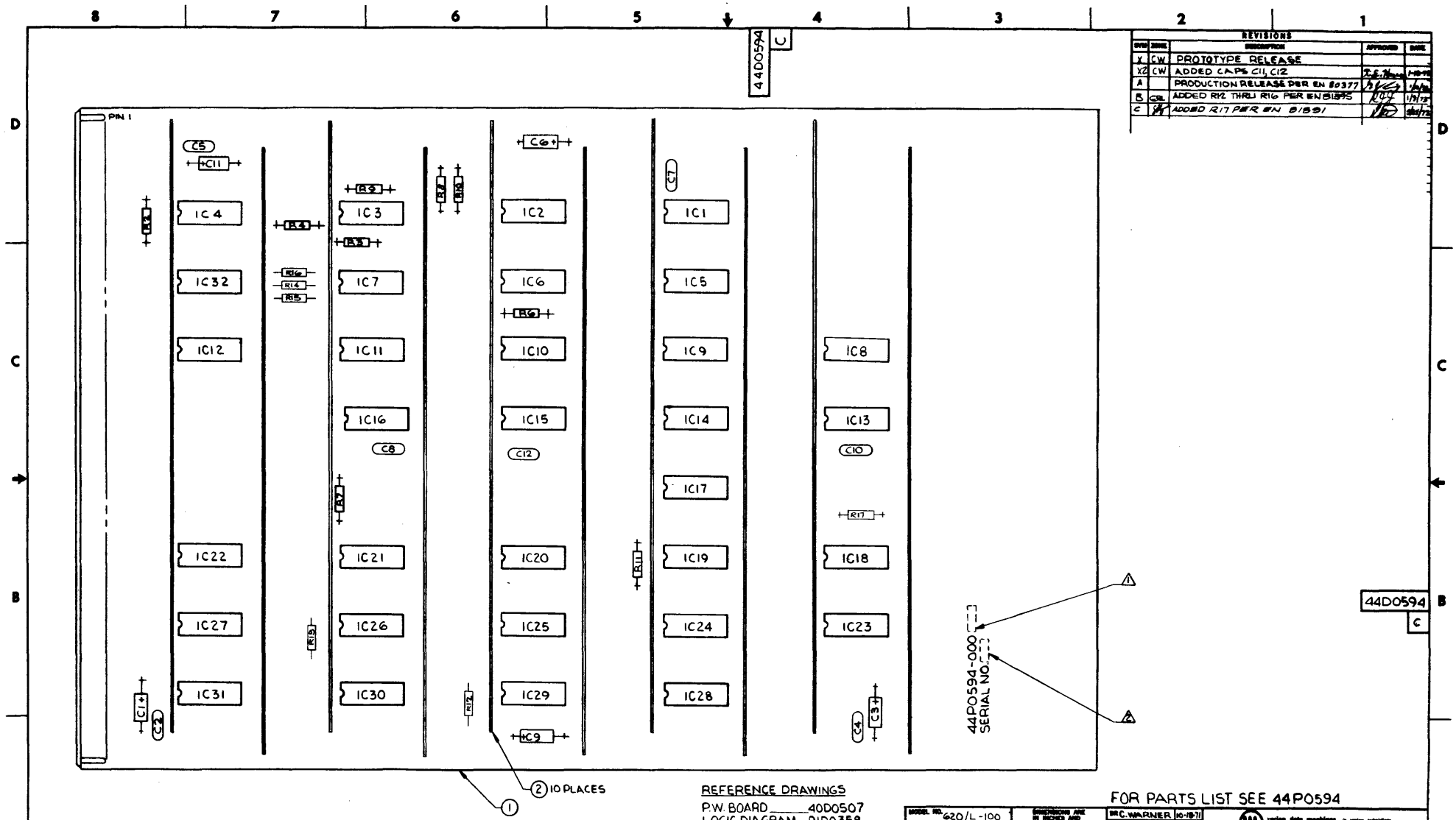

REVISIONS				
SYM	ZONE	DESCRIPTION	APPROVED	DATE
X	CW	PROTOTYPE RELEASE		
X2	CW	ADDED CAPS C11, C12		
A		PRODUCTION RELEASE PER EN 80377		
B	CW	ADDED R12 THRU R16 PER EN 81595		
C		ADDED R17 PER EN 81891		

REFERENCE DRAWINGS

P.W. BOARD ____ 40D0507
LOGIC DIAGRAM _ 91D0358
PHOTOMASTER _ 97D0700
SOLDERMASK ____ 97D0701
SILKSCREEN ____ 97D0702

FOR PARTS LIST SEE 44P0594

⚠ MARK SERIAL NO. WHERE SHOWN USING .12 HIGH PERMANENT CHARACTERS.

⚠ MARK REVISION LETTER OF PARTS LIST TO WHICH PART WAS MANUFACTURED. APPROX. WHERE SHOWN IDENTIFICATION TO BE .12 HIGH AND PERMANENT.

NOTE: UNLESS OTHERWISE SPECIFIED

MODEL NO. 620/L-100
NEXT ASSY 01A0145
MATERIAL
FINISH

DIMENSIONS ARE IN INCHES AND AFTER FINISHING
TOLERANCES UNLESS OTHERWISE SPECIFIED
.X ± .1
.XX ± .03
.XXX ± .005
ANGLES ± 0.5°
BREAK ALL SHARP EDGES .005 R APPROX
DO NOT SCALE DRAWING

DR	C. WARNER	10-19-71
CHK		1-14-72
DSGN		
ENGR		1-18-72
APPD		1-19-72
APPD		

THIS DOCUMENT MAY CONTAIN PROPRIETARY INFORMATION AND SUCH INFORMATION MAY NOT BE DISCLOSED TO OTHERS FOR ANY PURPOSE OR USED TO PRODUCE THE ARTICLE OR SUBJECT, WITHOUT WRITTEN PERMISSION FROM VDM

varian data machines / a varian subsidiary
2722 michelson drive / irvine / california / 92664

TITLE
MULTIPLY/DIVIDE, EA.
DM 338 ASSEMBLY

CODE IDENT NO.	SIZE	DWG NO	REV
21101	D	44D0594	C

SCALE 2/1 SHEET 1 OF 1

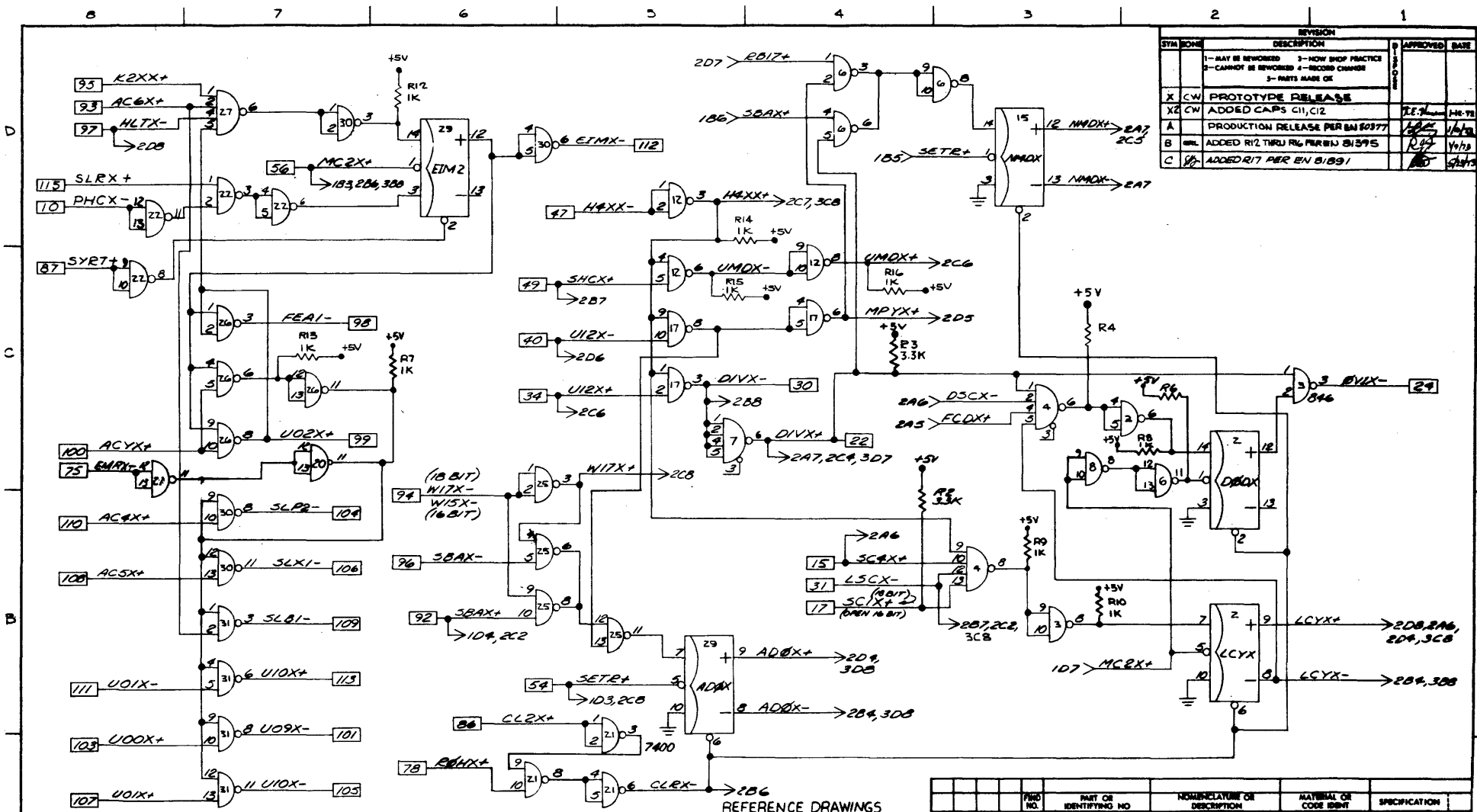

REVISION				
SYM	ZONE	DESCRIPTION (1—MAY BE REWORKED 2—CANNOT BE REWORKED 3—NOW SHOP PRACTICE 4—RECORD CHANGE 5—PARTS MADE OK)	APPROVED	DATE
X	CW	PROTOTYPE RELEASE		
X2	CW	ADDED CAPS C11, C12		
A		PRODUCTION RELEASE PER EN 80377		
B		ADDED R12 THRU R16 PER EN 81395		
C		ADDED R17 PER EN 81891		

5. PWR DISTRIBUTION TO IC'S: 2 & 29 PIN 4 = +5V, PIN 11 = GND
4. PWR DISTRIBUTION TO IC: 16 PIN 5 = +5V, PIN 12 = GND
3. PWR DISTRIBUTION TO IC'S: PIN 14 = +5V, PIN 7 = GND EXCEPTIONS NOTE 4 AND 5.
2. ALL RESISTORS ARE 1.0K, ¼W, ±5%.
1. THE SYMBOLS XXX>— AND —>XXX INDICATE A SIGNAL SOURCE AND FLOW LOCATION CODE. THE FIRST DIGIT INDICATES SHEET NO., THE LETTER A HORIZONTAL ZONE AND THE SECOND DIGIT A VERTICAL ZONE.

NOTE: UNLESS OTHERWISE SPECIFIED

LAST REFERENCE DESIGNATION USED			
R17	C12	IC32	
REFERENCE DESIGNATIONS NOT USED			
R5	A1		

REFERENCE DRAWINGS

ASSEMBLY 4000594
BOARD DETAIL 4000507
PHOTO MASTER 97D0700
SOLDER MASK 97D0701
SILKSCREEN 97D0702

FIND NO.	PART OR IDENTIFYING NO	NOMENCLATURE OR DESCRIPTION	MATERIAL OR CODE IDENT	SPECIFICATION
QTY REQD PER ASSY		LIST OF MATERIALS OR PARTS LIST		

DASH NO.	NEXT ASSY	N/A QTY
	44D0594	REF

DR C. WARNER 4-12-73
CHK 4-12-73
DSGN
ENGR K. E. Hanson 4-18-73
PROJ 4-18-73
REL
APPROVED
APPROVED

verian data machines

LOGIC DIAGRAM
DM338
MULTIPLY DIVIDE & E.A.

CODE IDENT NO 21101 | SIZE D | 91D0358 | REV C
SCALE | SHEET 1 OF 3

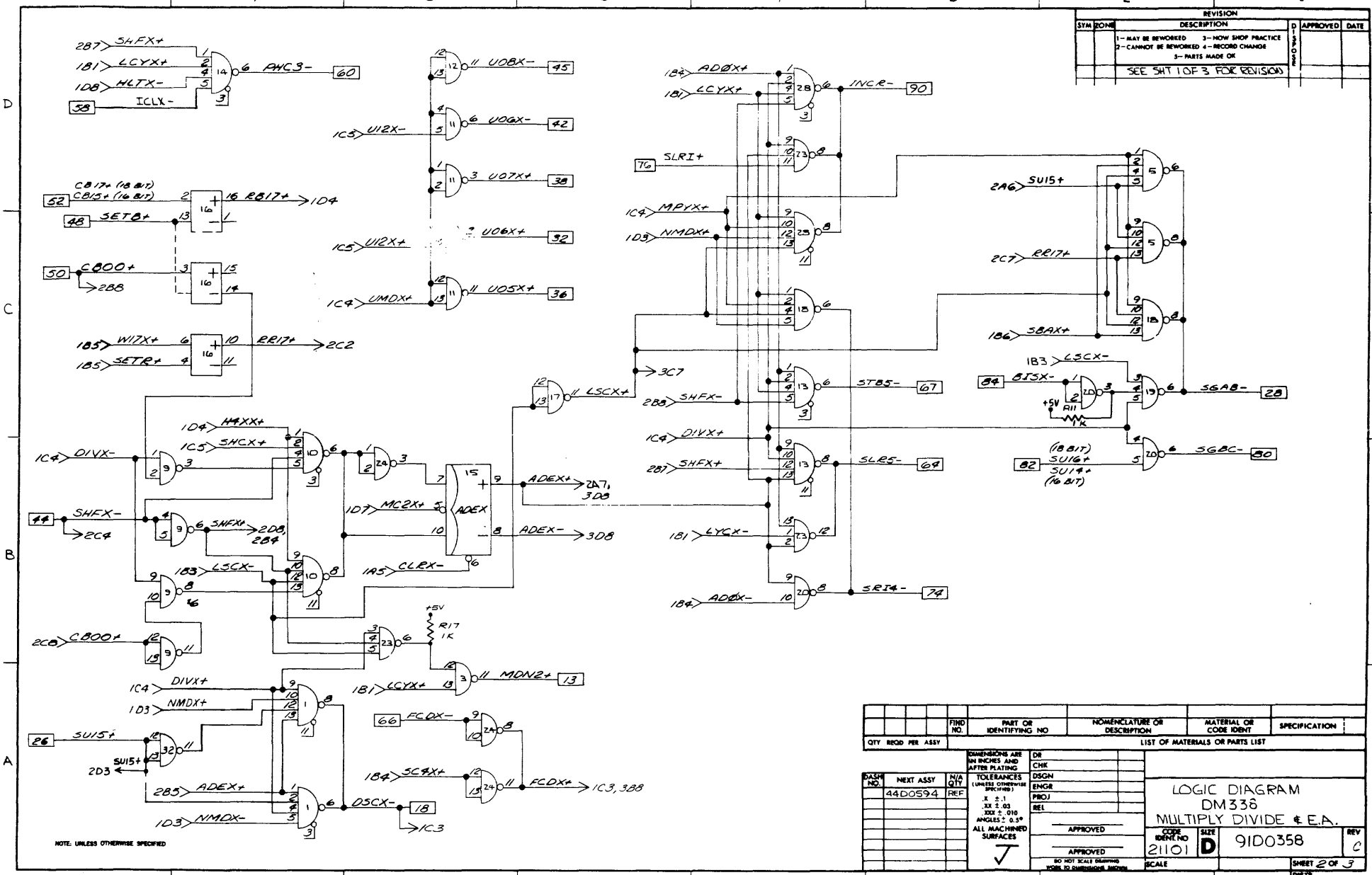

REVISION					
SYM	ZONE	DESCRIPTION	DIST CODE	APPROVED	DATE
		1 - MAY BE REWORKED 3 - NOW SHOP PRACTICE 2 - CANNOT BE REWORKED 4 - RECORD CHANGE 5 - PARTS MADE OK			
		SEE SHT 1 OF 3 FOR REVISIONS			

FIND NO.	PART OR IDENTIFYING NO	NOMENCLATURE OR DESCRIPTION	MATERIAL OR CODE IDENT	SPECIFICATION
QTY REQD PER ASSY		LIST OF MATERIALS OR PARTS LIST		

DASH NO.	NEXT ASSY	N/A QTY
	44D0594	REF

DIMENSIONS ARE IN INCHES AND AFTER PLATING
TOLERANCES (UNLESS OTHERWISE SPECIFIED) .X ±.1 .XX ±.03 .XXX ±.010 ANGLES ± 0.5°
ALL MACHINED SURFACES

DR
CHK
DSGN
ENGR
PROJ
REL
APPROVED
APPROVED
DO NOT SCALE DRAWING WORK TO DIMENSIONS SHOWN

LOGIC DIAGRAM
DM338
MULTIPLY DIVIDE & E.A.

CODE IDENT NO	SIZE	91D0358	REV
21101	D		C

SCALE
SHEET 2 OF 3
DSTR

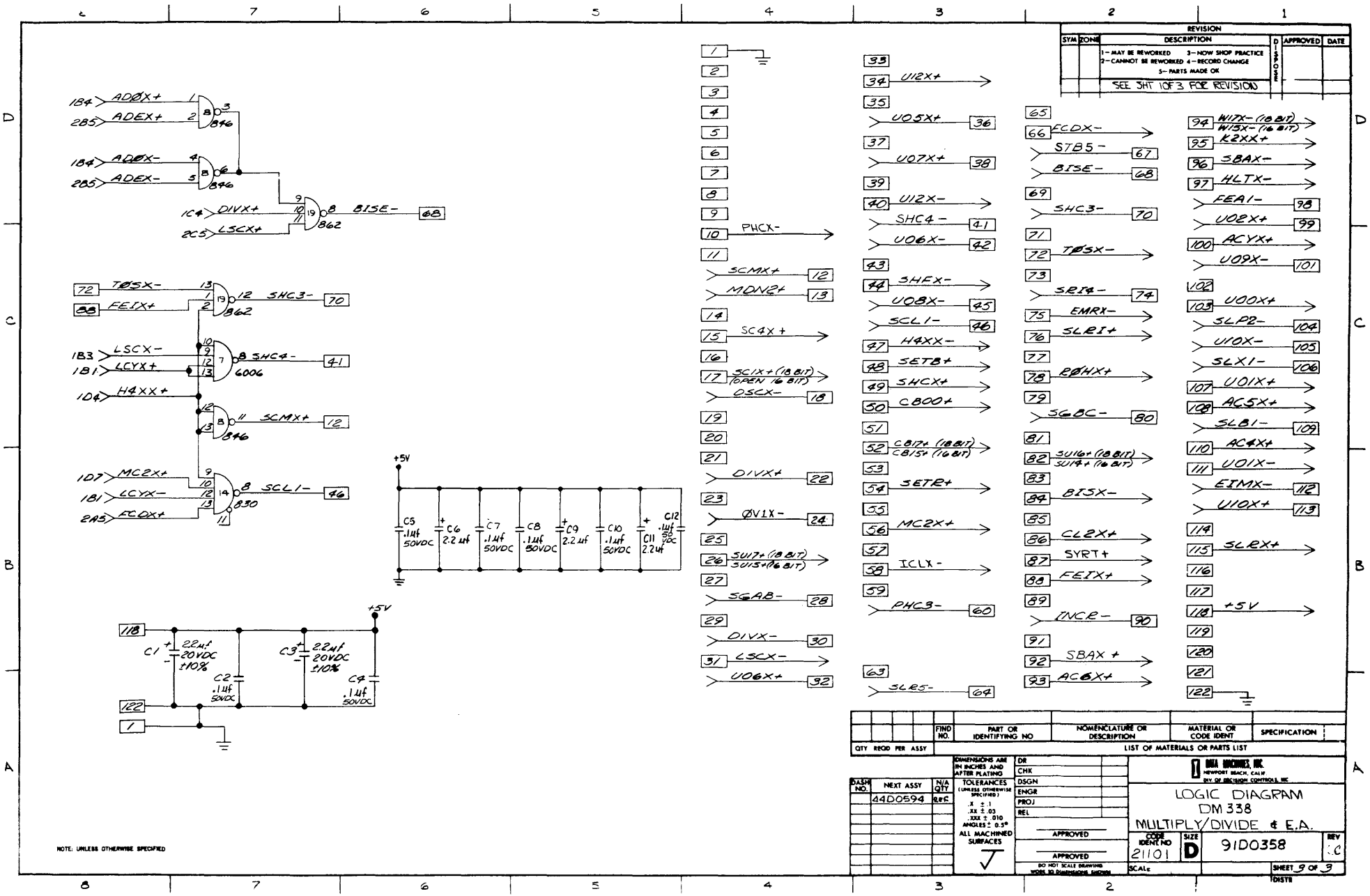

REVISION
SYM ZONE DESCRIPTION DISPOSE APPROVED DATE
1-MAY BE REWORKED 3-NOW SHOP PRACTICE
2-CANNOT BE REWORKED 4-RECORD CHANGE
5-PARTS MADE OK
SEE SHT 1 OF 3 FOR REVISION
1B4 ADØX+
2B5 ADEX+
1B4 ADØX-
2B5 ADEX-
1C4 DIVX+
2C5 LSCX+
BISE- 68
TØSX- 72
FEIX+ 88
SHC3- 70
1B3 LSCX-
1B1 LCYX+
SHC4- 41
1D4 H4XX+
SCMX+ 12
1D7 MC2X+
1B1 LCYX-
2A5 FCDX+
SCL1- 46
+5V
C5 .1uf 50VDC
C6 2.2uf
C7 .1uf 50VDC
C8 .1uf 50VDC
C9 2.2uf
C10 .1uf 50VDC
C11 2.2uf
C12 .1uf 50VDC
C1 2.2uf 20VDC ±10%
C2 .1uf 50VDC
C3 2.2uf 20VDC ±10%
C4 .1uf 50VDC
PHCX-
SCMX+
MDN2+
SC4X+
SC1X+ (18 BIT) (OPEN 16 BIT)
DSCX-
DIVX+
ØV1X-
SU17+ (18 BIT) SU15+ (16 BIT)
SGAB-
DIVX-
LSCX-
U06X+
U12X+
U05X+
U07X+
U12X-
SHC4-
U06X-
SHFX-
U08X-
SCL1-
H4XX-
SETB+
SHCX+
CB00+
CB17+ (18 BIT) CB15+ (16 BIT)
SETR+
MC2X+
ICLX-
PHC3-
SLR5-
FCDX-
STB5-
BISE-
SHC3-
TØSX-
SRI4-
EMRX-
SLRI+
RØHX+
SGBC-
SU16+ (18 BIT) SU14+ (16 BIT)
BISX-
CL2X+
SYRT+
FEIX+
INCR-
SBAX+
AC6X+
W17X- (18 BIT) W15X- (16 BIT)
K2XX+
SBAX-
HLTX-
FEA1-
U02X+
ACYX+
U09X-
U00X+
SLP2-
U10X-
SLX1-
U01X+
AC5X+
SLB1-
AC4X+
U01X-
EIMX-
U10X+
SLRX+
+5V
NOTE: UNLESS OTHERWISE SPECIFIED
FIND NO. PART OR IDENTIFYING NO NOMENCLATURE OR DESCRIPTION MATERIAL OR CODE IDENT SPECIFICATION
QTY REQD PER ASSY
LIST OF MATERIALS OR PARTS LIST
DASH NO. NEXT ASSY N/A QTY
44D0594 REF
DIMENSIONS ARE IN INCHES AND AFTER PLATING
TOLERANCES (UNLESS OTHERWISE SPECIFIED)
.X ± .1
.XX ± .03
.XXX ± .010
ANGLES ± 0.5°
ALL MACHINED SURFACES
DR
CHK
DSGN
ENGR
PROJ
REL
APPROVED
APPROVED
DO NOT SCALE DRAWING WORK TO DIMENSIONS SHOWN
DATA MACHINES, INC.
NEWPORT BEACH, CALIF.
DIV OF DECISION CONTROLS, INC
LOGIC DIAGRAM
DM 338
MULTIPLY/DIVIDE & E.A.
CODE IDENT NO 21101
SIZE D
91D0358
REV C
SCALE
SHEET 9 OF 3
DISTR

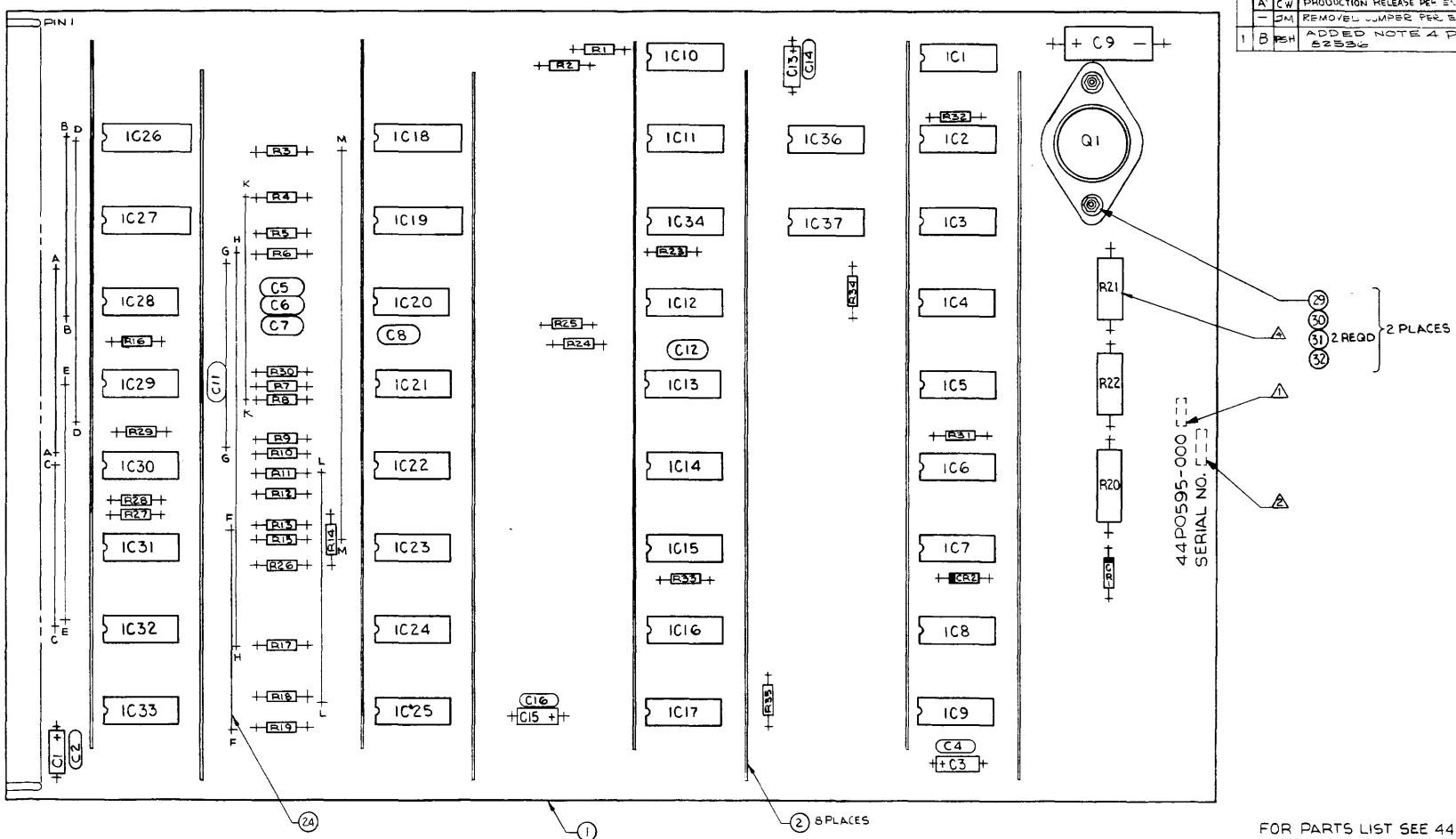

CODE	SYM	ZONE	DESCRIPTION	APPROVED	DATE
	X	CW	PROTOTYPE RELEASE		
	X2	CW	RELOCATED R14 & 26	R.E. Hanson	12-2-71
	X3	CW	DELETED F/N 25	R.E. Hanson	1-11-72
	A	CW	PRODUCTION RELEASE PER EN 80381	[illegible]	1/11/72
	—	JM	REMOVED JUMPER PER EN 80528	[illegible]	1/12/72
1	B	PSH	ADDED NOTE 4 PER EN 82536	[illegible]	1/15/74

REVISIONS

4. DELAY INSERTION OF R21 UNTIL AFTER CLEANING IN FREON.
3. MOUNT R20, R21, & R22 .06 OFF OF BOARD
2. MARK SERIAL NO. WHERE SHOWN USING .12 HIGH PERMANENT CHARACTERS.
1. MARK REVISION LETTER OF PARTS LIST TO WHICH PART WAS MANUFACTURED. APPROX. WHERE SHOWN. IDENTIFICATION TO BE .12 HIGH CHARACTERS & PERMANENT.

NOTE: UNLESS OTHERWISE SPECIFIED

REFERENCE DRAWINGS

LOGIC DIAGRAM - - - 91D0359
PHOTOMASTER - - - - 97D0703
BOARD DETAIL - - - - 40D0508

SOLDERMASK - - - - 97D0705
SILKSCREEN - - - - 97D0704

FOR PARTS LIST SEE 44P0595

MODEL NO. 620/L-100	DIMENSIONS ARE IN INCHES AND AFTER FINISHING	DR C. WARNER	10-12-71
NEXT ASSY 01A1277	TOLERANCES (UNLESS OTHERWISE SPECIFIED) .X ± .1 .XX ± .03 .XXX ± .010 ANGLES ± 0.5°	CHK. [illegible]	1/11/72
MATERIAL		DSGN	
		ENGR R.E. Hanson	1-11-72
		APPD [illegible]	1-11-72
FINISH	BREAK ALL SHARP EDGES .010 R APPROX	APPD	
	DO NOT SCALE DRAWING		

THIS DOCUMENT MAY CONTAIN PROPRIETARY INFORMATION AND SUCH INFORMATION MAY NOT BE DISCLOSED TO OTHERS FOR ANY PURPOSE OR USED TO PRODUCE THE ARTICLE OR SUBJECT, WITHOUT WRITTEN PERMISSION FROM VDM

varian data machines a varian subsidiary 2722 michelson drive, irvine, california, 92664

TITLE PROCESSOR CONTROL NO 1. DM 339 - ASSEMBLY

CODE IDENT NO.	SIZE	DWG NO	REV
21101	D	44D0595	B

SCALE 2/1 SHEET 1 OF 1

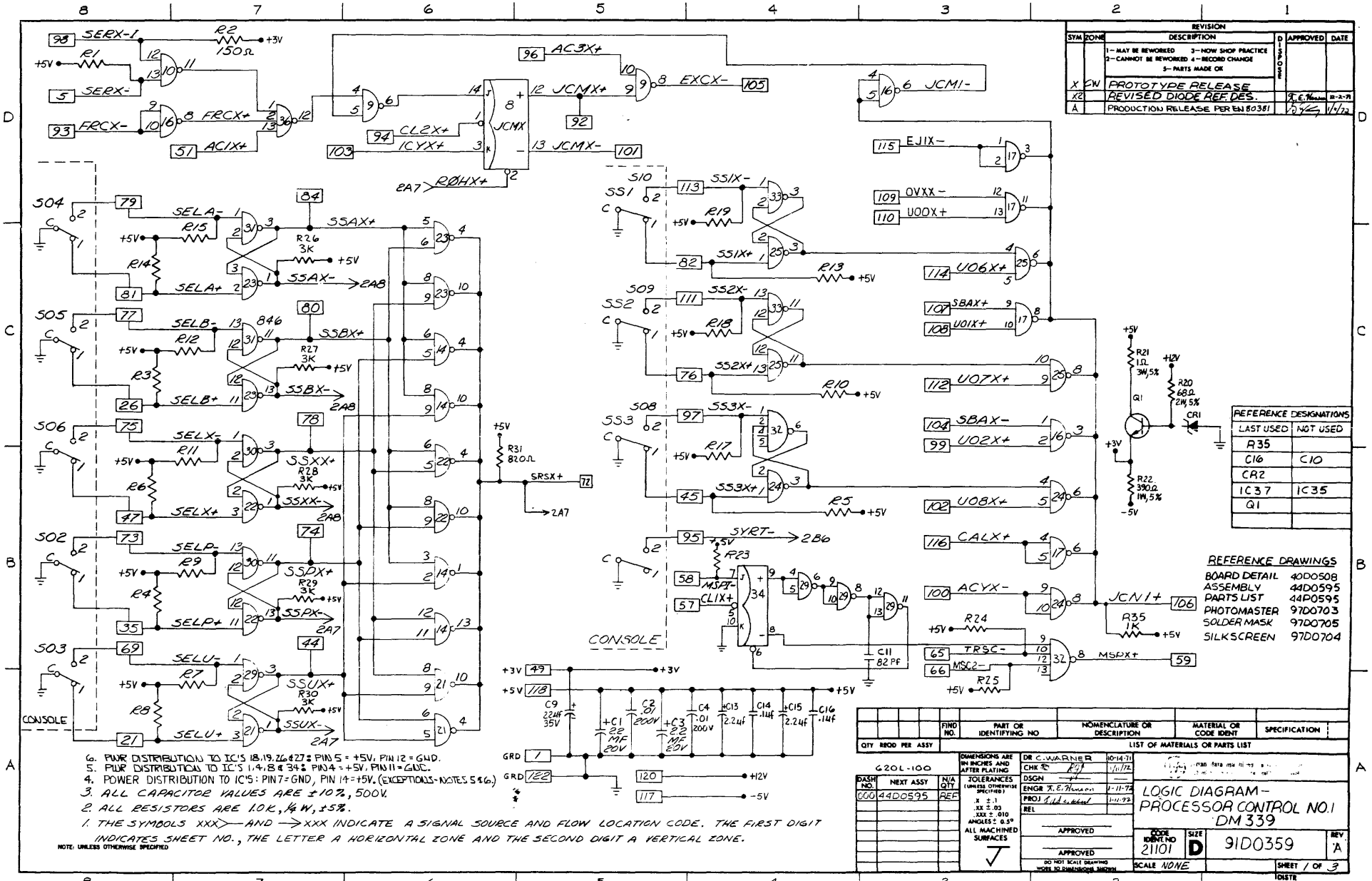

REVISION					
SYM	ZONE	DESCRIPTION	DISPOSITION	APPROVED	DATE
		1 - MAY BE REWORKED 3 - NOW SHOP PRACTICE 2 - CANNOT BE REWORKED 4 - RECORD CHANGE 5 - PARTS MADE OK			
X	CW	PROTOTYPE RELEASE			
X2		REVISED DIODE REF DES.			11-2-71
A		PRODUCTION RELEASE PER EN 80381			1/5/72

REFERENCE DESIGNATIONS	
LAST USED	NOT USED
R35	
C16	C10
CR2	
IC37	IC35
Q1	

REFERENCE DRAWINGS

BOARD DETAIL	40D0508
ASSEMBLY	44D0595
PARTS LIST	44P0595
PHOTOMASTER	97D0703
SOLDER MASK	97D0705
SILKSCREEN	97D0704

6. PWR DISTRIBUTION TO IC'S 18,19,26 & 27: PIN 5 = +5V, PIN 12 = GND.
5. PWR DISTRIBUTION TO IC'S 1,4,8 & 34: PIN 4 = +5V, PIN 11 = GND.
4. POWER DISTRIBUTION TO IC'S: PIN 7 = GND, PIN 14 = +5V. (EXCEPTIONS - NOTES 5 & 6.)
3. ALL CAPACITOR VALUES ARE ±10%, 500V.
2. ALL RESISTORS ARE 1.0K, ¼W, ±5%.
1. THE SYMBOLS XXX>— AND —>XXX INDICATE A SIGNAL SOURCE AND FLOW LOCATION CODE. THE FIRST DIGIT INDICATES SHEET NO., THE LETTER A HORIZONTAL ZONE AND THE SECOND DIGIT A VERTICAL ZONE.

NOTE: UNLESS OTHERWISE SPECIFIED

FIND NO.	PART OR IDENTIFYING NO	NOMENCLATURE OR DESCRIPTION	MATERIAL OR CODE IDENT	SPECIFICATION
QTY REQD PER ASSY		LIST OF MATERIALS OR PARTS LIST		

620L-100

DASH NO.	NEXT ASSY	N/A QTY
000	44D0595	REF

DIMENSIONS ARE IN INCHES AND AFTER PLATING
TOLERANCES (UNLESS OTHERWISE SPECIFIED)
.X ± .1
.XX ± .03
.XXX ± .010
ANGLES ± 0.5°
ALL MACHINED SURFACES

DR	C. WARNER	10-14-71
CHK		1/11/72
DSGN		—
ENGR	R. E. Thomson	1-11-72
PROJ		1-11-72
REL		

APPROVED
APPROVED
DO NOT SCALE DRAWING REFER TO DIMENSIONS SHOWN

LOGIC DIAGRAM - PROCESSOR CONTROL NO.1 DM 339

CODE IDENT NO	SIZE		REV
21101	D	91D0359	A

SCALE NONE
SHEET 1 OF 3
DISTR

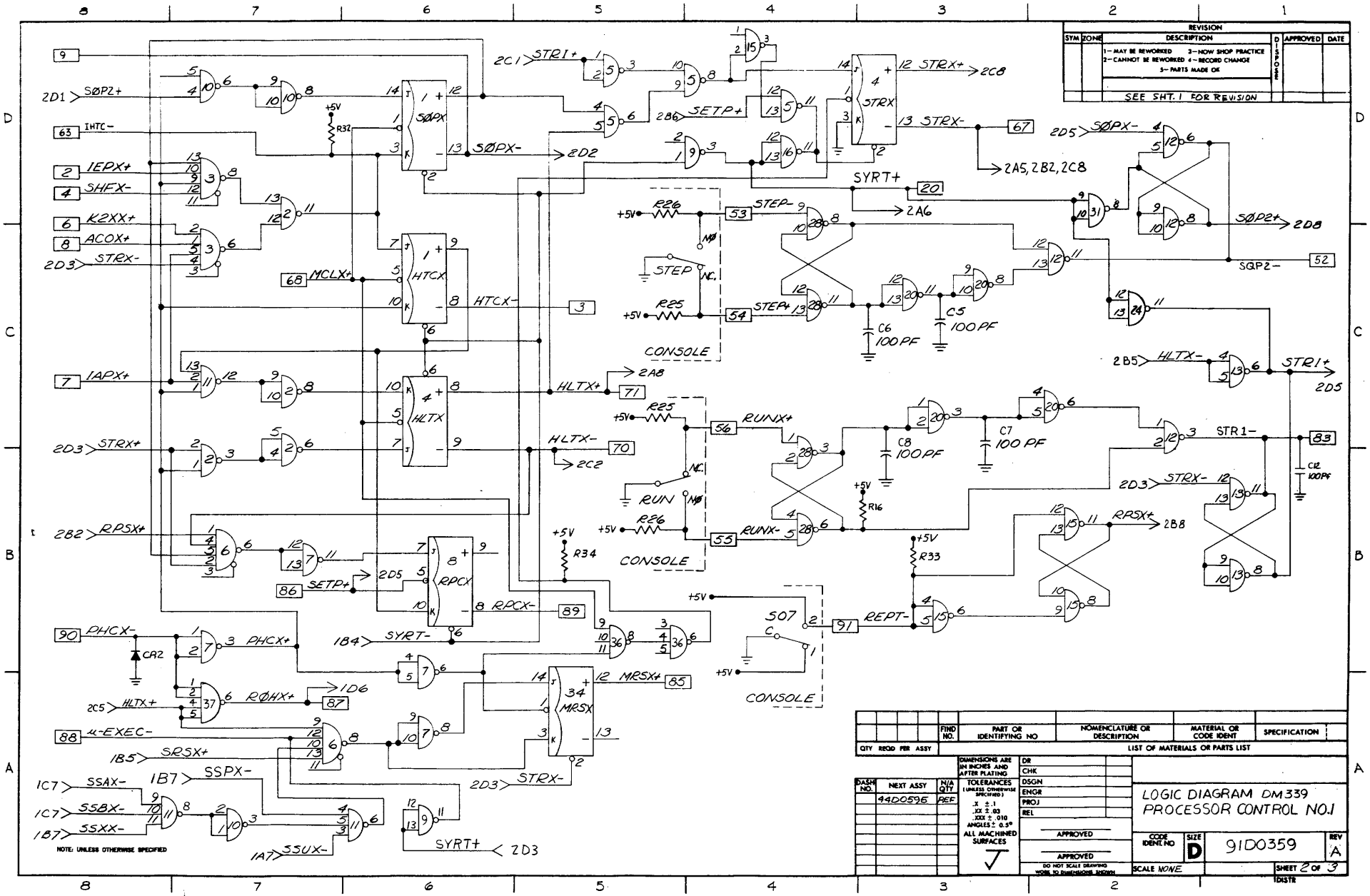

REVISION
SYM ZONE DESCRIPTION DISPOSE APPROVED DATE
1-MAY BE REWORKED 3-NOW SHOP PRACTICE
2-CANNOT BE REWORKED 4-RECORD CHANGE
5-PARTS MADE OK
SEE SHT. 1 FOR REVISION
2D1 SØP2+
63 IHTC-
2 IEPX+
4 SHFX-
6 K2XX+
8 ACOX+
2D3 STRX-
68 MCLX+
7 IAPX+
2D3 STRX+
2B2 RPSX+
86 SETP+
90 PHCX-
CR2
2C5 HLTX+
88 μ-EXEC-
1B5 SRSX+
1C7 SSAX-
1C7 SSBX-
1B7 SSXX-
1A7 SSUX-
1B7 SSPX-
SØPX
HTCX
HLTX
RPCX
MRSX
SØPX-
HTCX-
HLTX+
HLTX-
RPCX-
SYRT-
MRSX+
SYRT+
2C1 STRI+
2B6 SETP+
STRX
STRX+
STRX-
2A5, 2B2, 2C8
SYRT+
2A6
2D5 SØPX-
SØP2+
2D8
SQP2-
STEP-
STEP+
STEP
CONSOLE
C6 100PF
C5 100PF
2B5 HLTX-
STRI+
2D5
2A8
RUNX+
RUNX-
RUN
C8 100PF
C7 100PF
STR1-
C12 100PF
2D3 STRX-
RPSX+
2B8
REPT-
S07
NOTE: UNLESS OTHERWISE SPECIFIED
FIND NO. PART OR IDENTIFYING NO NOMENCLATURE OR DESCRIPTION MATERIAL OR CODE IDENT SPECIFICATION
QTY REQD PER ASSY
LIST OF MATERIALS OR PARTS LIST
DIMENSIONS ARE IN INCHES AND AFTER PLATING
TOLERANCES (UNLESS OTHERWISE SPECIFIED)
.X ± .1
.XX ± .03
.XXX ± .010
ANGLES ± 0.5°
ALL MACHINED SURFACES
DR
CHK
DSGN
ENGR
PROJ
REL
APPROVED
APPROVED
DO NOT SCALE DRAWING WORK TO DIMENSIONS SHOWN
DASH NO. NEXT ASSY N/A QTY
44D0596 REF
LOGIC DIAGRAM DM339
PROCESSOR CONTROL NO.1
CODE IDENT NO SIZE D 91D0359 REV A
SCALE NONE
SHEET 2 OF 3
DISTR

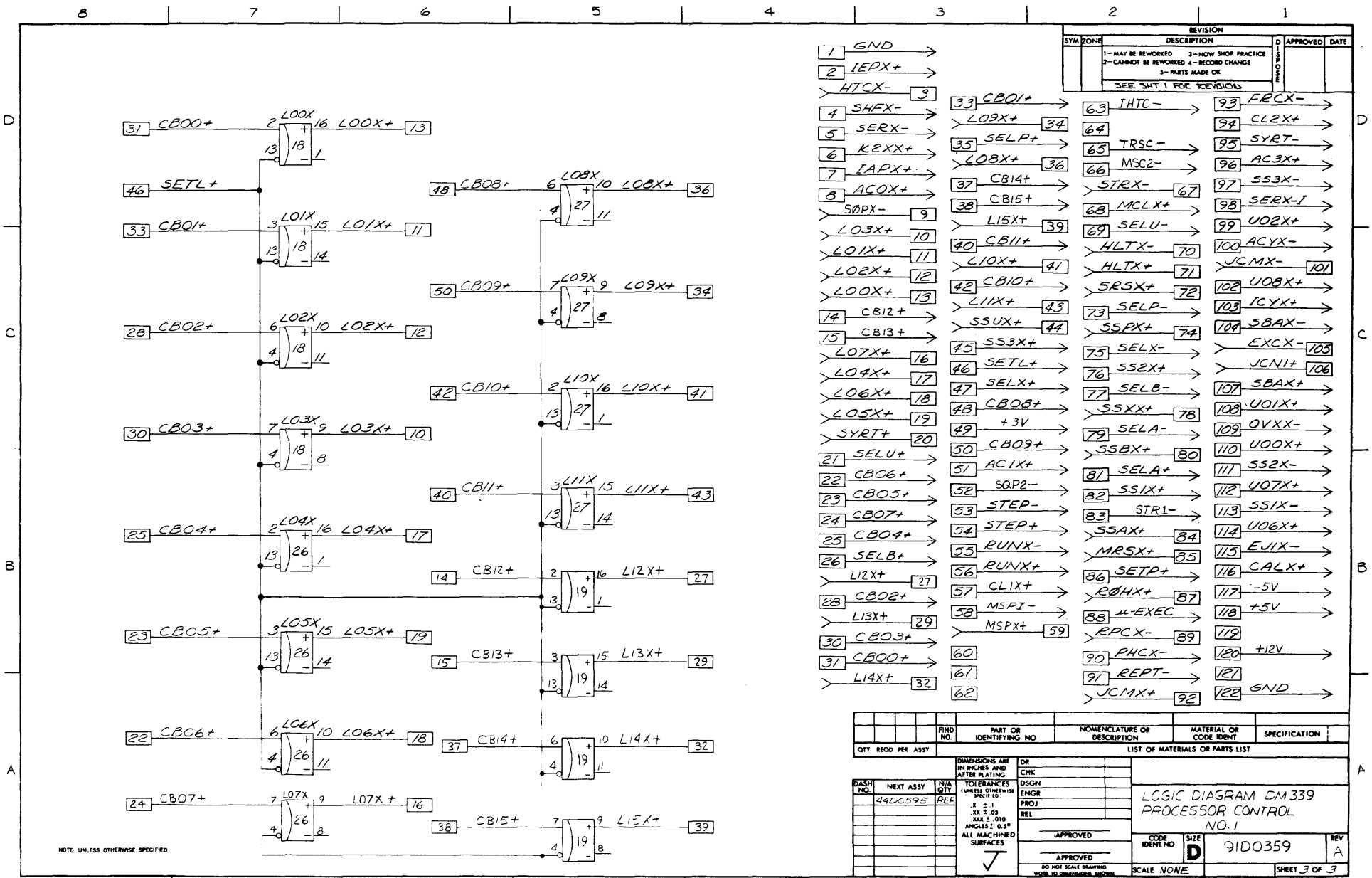
31 CB00+
L00X
L00X+ 13
46 SETL+
33 CB01+
L01X
L01X+ 11
28 CB02+
L02X
L02X+ 12
30 CB03+
L03X
L03X+ 10
25 CB04+
L04X
L04X+ 17
23 CB05+
L05X
L05X+ 19
22 CB06+
L06X
L06X+ 18
24 CB07+
L07X
L07X+ 16
48 CB08+
L08X
L08X+ 36
50 CB09+
L09X
L09X+ 34
42 CB10+
L10X
L10X+ 41
40 CB11+
L11X
L11X+ 43
14 CB12+
L12X+ 27
15 CB13+
L13X+ 29
37 CB14+
L14X+ 32
38 CB15+
L15X+ 39
NOTE: UNLESS OTHERWISE SPECIFIED
1 GND
2 IEPX+
HTCX- 3
4 SHFX-
5 SERX-
6 K2XX+
7 IAPX+
8 ACOX+
SØPX- 9
L03X+ 10
L01X+ 11
L02X+ 12
L00X+ 13
14 CB12+
15 CB13+
L07X+ 16
L04X+ 17
L06X+ 18
L05X+ 19
SYRT+ 20
21 SELU+
22 CB06+
23 CB05+
24 CB07+
25 CB04+
26 SELB+
L12X+ 27
28 CB02+
L13X+ 29
30 CB03+
31 CB00+
L14X+ 32
33 CB01+
L09X+ 34
35 SELP+
L08X+ 36
37 CB14+
38 CB15+
L15X+ 39
40 CB11+
L10X+ 41
42 CB10+
L11X+ 43
SSUX+ 44
45 SS3X+
46 SETL+
47 SELX+
48 CB08+
49 +3V
50 CB09+
51 ACIX+
52 SQP2-
53 STEP-
54 STEP+
55 RUNX-
56 RUNX+
57 CLIX+
58 MSPI-
MSPX+ 59
60
61
62
63 IHTC-
64
65 TRSC-
66 MSC2-
STRX- 67
68 MCLX+
69 SELU-
HLTX- 70
HLTX+ 71
SRSX+ 72
73 SELP-
SSPX+ 74
75 SELX-
76 SS2X+
77 SELB-
SSXX+ 78
79 SELA-
SSBX+ 80
81 SELA+
82 SSIX+
83 STR1-
SSAX+ 84
MRSX+ 85
86 SETP+
RØHX+ 87
88 μ-EXEC
EPCX- 89
90 PHCX-
91 REPT-
JCMX+ 92
93 FRCX-
94 CL2X+
95 SYRT-
96 AC3X+
97 SS3X-
98 SERX-1
99 U02X+
100 ACYX-
JCMX- 101
102 U08X+
103 ICYX+
104 SBAX-
EXCX- 105
JCN1+ 106
107 SBAX+
108 U01X+
109 OVXX-
110 U00X+
111 SS2X-
112 U07X+
113 SSIX-
114 U06X+
115 EJIX-
116 CALX+
117 -5V
118 +5V
119
120 +12V
121
122 GND
REVISION
SYM ZONE DESCRIPTION DISPOSITION APPROVED DATE
1 - MAY BE REWORKED 2 - CANNOT BE REWORKED 3 - NOW SHOP PRACTICE 4 - RECORD CHANGE 5 - PARTS MADE OK
SEE SHT 1 FOR REVISIONS
FIND NO. PART OR IDENTIFYING NO NOMENCLATURE OR DESCRIPTION MATERIAL OR CODE IDENT SPECIFICATION
QTY REQD PER ASSY
LIST OF MATERIALS OR PARTS LIST
DIMENSIONS ARE IN INCHES AND AFTER PLATING
TOLERANCES (UNLESS OTHERWISE SPECIFIED) .X ± 1 .XX ± .03 .XXX ± .010 ANGLES ± 0.5°
ALL MACHINED SURFACES
DR CHK DSGN ENGR PROJ REL
APPROVED
APPROVED
DO NOT SCALE DRAWING WORK TO DIMENSIONS SHOWN
DASH NO. NEXT ASSY N/A QTY
44LC595 REF
LOGIC DIAGRAM CM339 PROCESSOR CONTROL NO. 1
CODE IDENT NO 91D0359 SIZE D REV A
SCALE NONE
SHEET 3 OF 3
DISTR

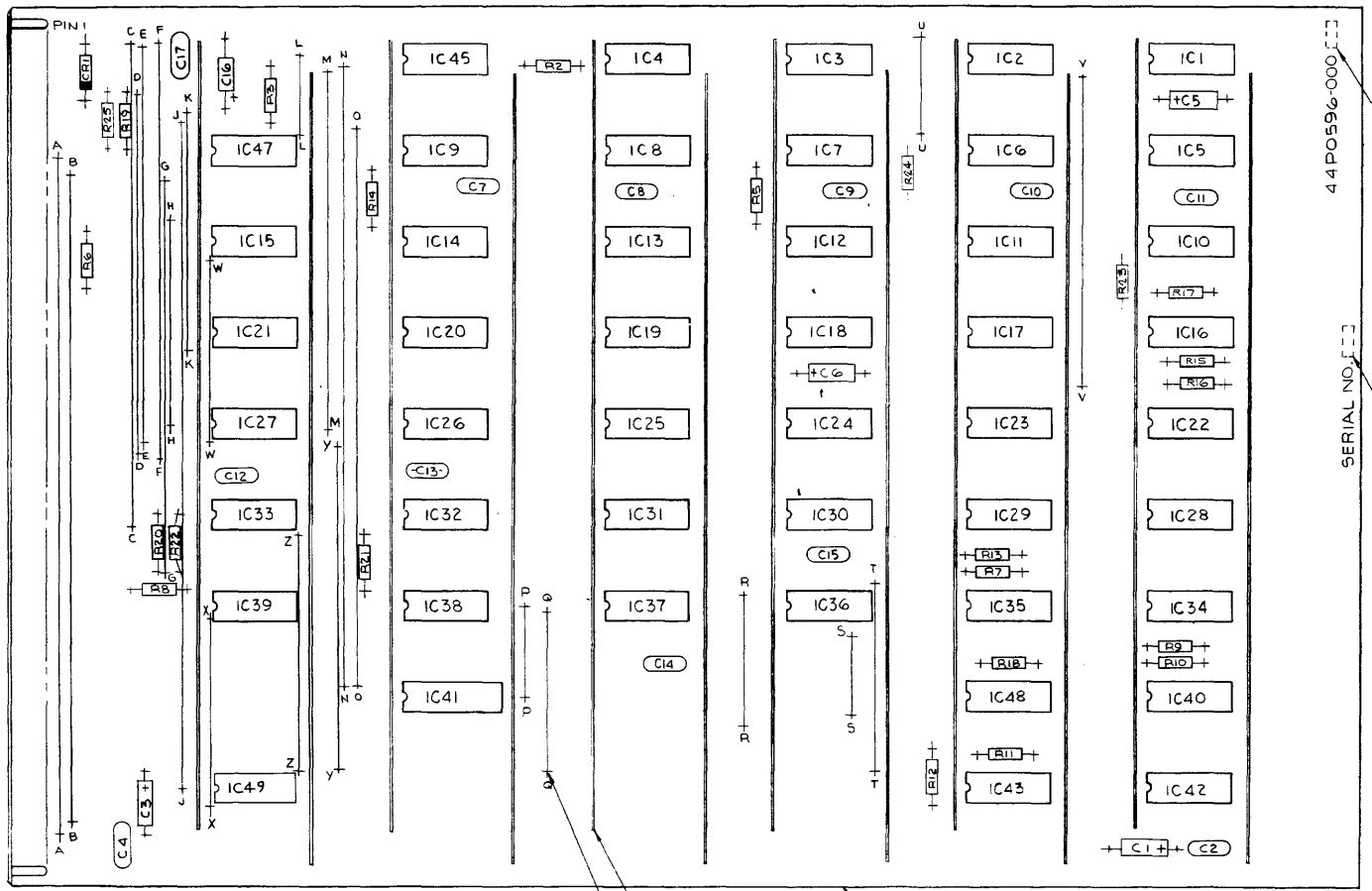

CODE	SYM	ZONE	DESCRIPTION	APPROVED	DATE
	X	CW	PROTOTYPE RELEASE		
	X2	CW	ADDED RESISTORS R15-22 & C16 & 17	R.E. Hanson	12-7-72
	X3	CW	DELETED F/N 21	R.E. Hanson	1-18-72
	A		PRODUCTION RELEASE PER EN 80375	[illegible]	1/13/73
	B		REVISED PER EN 81894	[illegible]	5/14/73
1	C	02	ADDED IC47 PER EN 82844	[illegible]	4/23/74

REVISIONS

FOR PARTS LIST SEE 44P0596

2 12 PLACES

17 23 PLACES

1

2 MARK SERIAL NO. WHERE SHOWN USING .12 HIGH PERMANENT CHARACTERS

1 MARK REVISION LETTER OF PARTS LIST TO WHICH PART WAS MANUFACTURED; APPROX WHERE SHOWN IDENTIFICATION TO BE .12 HIGH AND PERMANENT.

NOTE: UNLESS OTHERWISE SPECIFIED

REFERENCE DRAWINGS

LOGIC DIAGRAM	91D0360
PHOTO MASTER	97D0706
PW BOARD	40D0509
SOLDER MASK	97D0708
SILK SCREEN	97D0707

MODEL NO. 620/L-100

NEXT ASSY 01A1277

MATERIAL

FINISH

DIMENSIONS ARE IN INCHES AND AFTER FINISHING

TOLERANCES (UNLESS OTHERWISE SPECIFIED)

X ± .1
.XX ± .03
.XXX ± .010
ANGLES ± 0.5°

BREAK ALL SHARP EDGES .010 R APPROX

DO NOT SCALE DRAWING

DR C. WARNER 10-27-71
CHK
DSGN
ENGR R.E. Hanson 1-12-72
APPD [illegible] 1-12-72
APPD

THIS DOCUMENT MAY CONTAIN PROPRIETARY INFORMATION AND SUCH INFORMATION MAY NOT BE DISCLOSED TO OTHERS FOR ANY PURPOSE OR USED TO PRODUCE THE ARTICLE OR SUBJECT, WITHOUT WRITTEN PERMISSION FROM VDM

varian data machines a varian subsidiary
2722 michelson drive, irvine · california · 92664

TITLE
PROCESSOR CONTROL NO 2.
ASSEMBLY DM340

CODE IDENT NO.	SIZE	DWG NO	REV
21101	D	44D0596	C

SCALE

SHEET OF

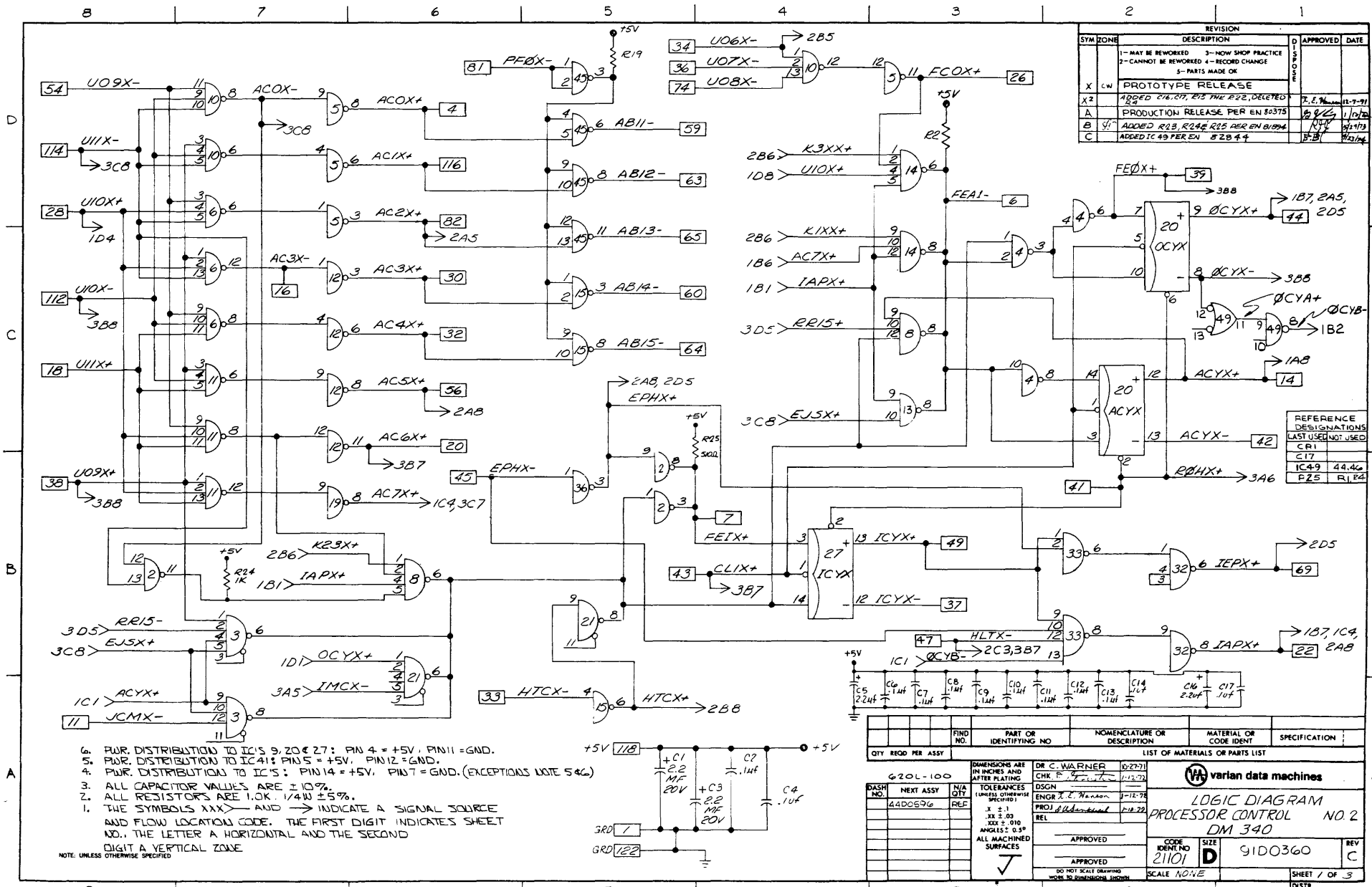

REVISION					
SYM	ZONE	DESCRIPTION	DISPOSE	APPROVED	DATE
		1—MAY BE REWORKED 3—NOW SHOP PRACTICE 2—CANNOT BE REWORKED 4—RECORD CHANGE 5—PARTS MADE OK			
X	CW	PROTOTYPE RELEASE			
X2		ADDED C16, C17, R15 THK R22, DELETED R4		T. E. Hanson	12-7-71
A		PRODUCTION RELEASE PER EN 80375		[illegible]	1/10/72
B		ADDED R23, R24 & R25 PER EN 81894		[illegible]	5/23/73
C		ADDED IC 49 PER EN 82844		[illegible]	4/23/74

REFERENCE DESIGNATIONS	
LAST USED	NOT USED
CR1	
C17	
IC49	44,46
R25	R1, R4

6. PWR. DISTRIBUTION TO IC'S 9, 20 & 27: PIN 4 = +5V, PIN 11 = GND.
5. PWR. DISTRIBUTION TO IC41: PIN 5 = +5V, PIN 12 = GND.
4. PWR. DISTRIBUTION TO IC'S: PIN 14 = +5V, PIN 7 = GND. (EXCEPTIONS NOTE 5 & 6)
3. ALL CAPACITOR VALUES ARE ± 10%.
2. ALL RESISTORS ARE 1.0K, 1/4W ± 5%.
1. THE SYMBOLS XXX>— AND —> INDICATE A SIGNAL SOURCE AND FLOW LOCATION CODE. THE FIRST DIGIT INDICATES SHEET NO., THE LETTER A HORIZONTAL AND THE SECOND DIGIT A VERTICAL ZONE

NOTE: UNLESS OTHERWISE SPECIFIED

QTY REQD PER ASSY	FIND NO.	PART OR IDENTIFYING NO	NOMENCLATURE OR DESCRIPTION	MATERIAL OR CODE IDENT	SPECIFICATION

LIST OF MATERIALS OR PARTS LIST

DASH NO.	NEXT ASSY	N/A QTY
	44D0596	REF

620L-100

DIMENSIONS ARE IN INCHES AND AFTER PLATING

TOLERANCES (UNLESS OTHERWISE SPECIFIED) .X ± .1 .XX ± .03 .XXX ± .010 ANGLES ± 0.5° ALL MACHINED SURFACES

DR	C. WARNER	10-27-71
CHK	[illegible]	1-12-72
DSGN		
ENGR	T. E. Hanson	1-12-72
PROJ	[illegible]	1-12-72
REL		

APPROVED

APPROVED

DO NOT SCALE DRAWING WORK TO DIMENSIONS SHOWN

varian data machines

LOGIC DIAGRAM PROCESSOR CONTROL NO. 2 DM 340

CODE IDENT NO 21101 | SIZE D | 91D0360 | REV C

SCALE NONE | SHEET 1 OF 3

DISTR

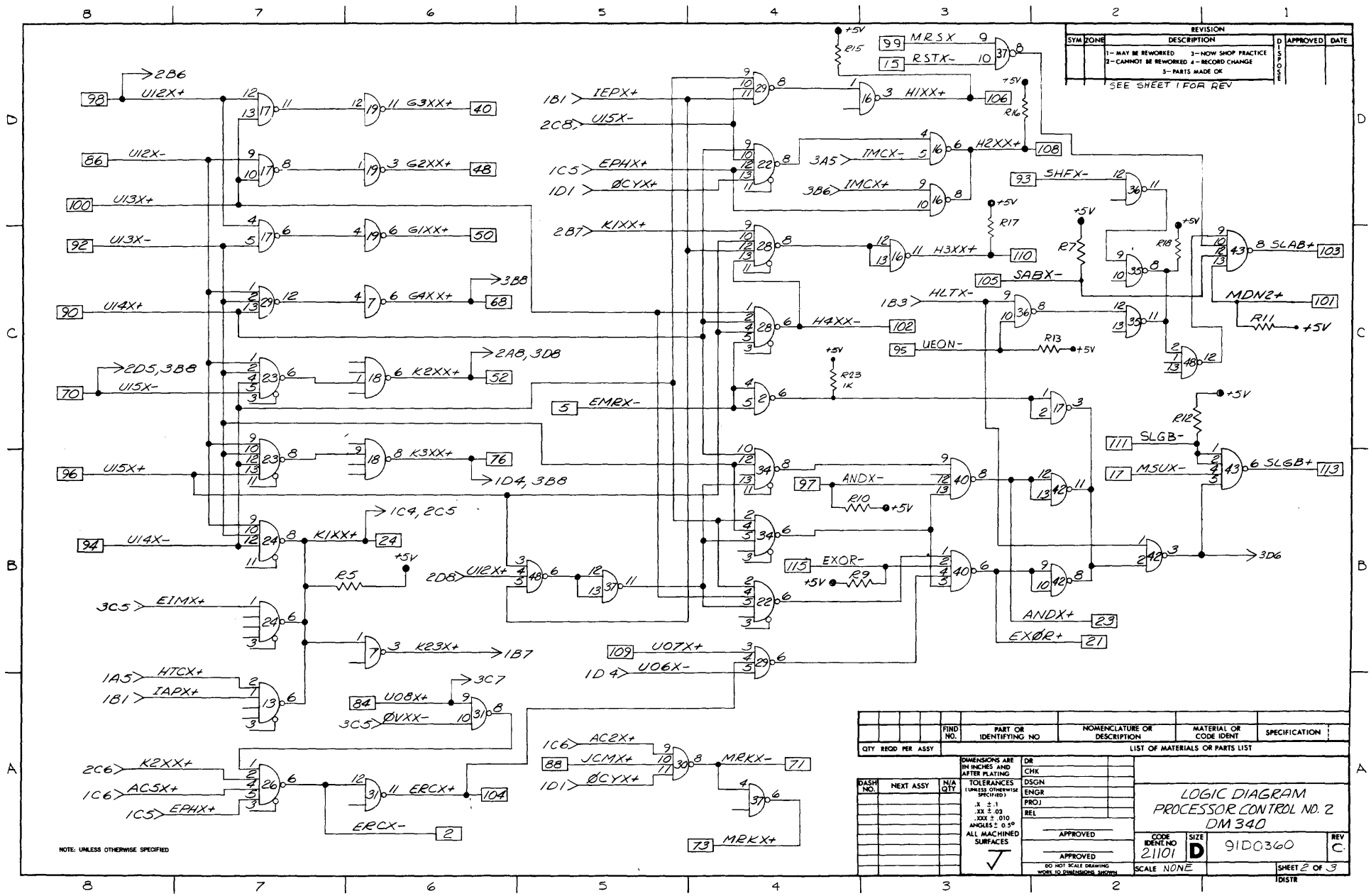
REVISION
SYM ZONE DESCRIPTION D APPROVED DATE
1-MAY BE REWORKED 3-NOW SHOP PRACTICE
2-CANNOT BE REWORKED 4-RECORD CHANGE
5-PARTS MADE OK
SEE SHEET 1 FOR REV
DISPOSE
NOTE: UNLESS OTHERWISE SPECIFIED
FIND NO. PART OR IDENTIFYING NO NOMENCLATURE OR DESCRIPTION MATERIAL OR CODE IDENT SPECIFICATION
QTY REQD PER ASSY
LIST OF MATERIALS OR PARTS LIST
DIMENSIONS ARE IN INCHES AND AFTER PLATING
TOLERANCES (UNLESS OTHERWISE SPECIFIED)
.X ± .1
.XX ± .03
.XXX ± .010
ANGLES ± 0.5°
ALL MACHINED SURFACES
DR
CHK
DSGN
ENGR
PROJ
REL
APPROVED
APPROVED
DO NOT SCALE DRAWING WORK TO DIMENSIONS SHOWN
DASH NO. NEXT ASSY N/A QTY
LOGIC DIAGRAM
PROCESSOR CONTROL NO. 2
DM 340
CODE IDENT NO 21101
SIZE D
91D0360
REV C
SCALE NONE
SHEET 2 OF 3
DISTR

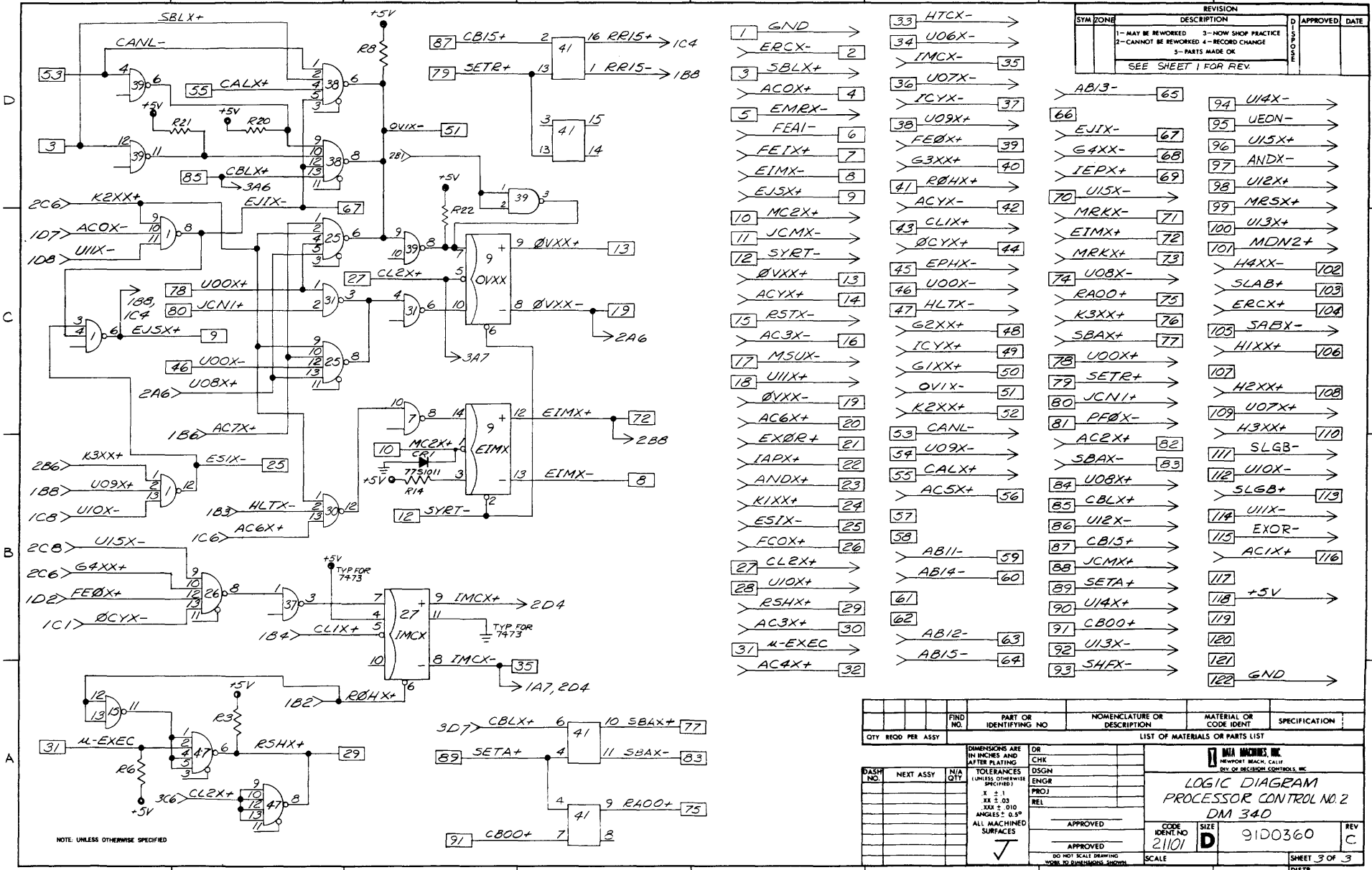

SYM	ZONE	REVISION DESCRIPTION	DISPOSITION	APPROVED	DATE
		1 – MAY BE REWORKED 3 – NOW SHOP PRACTICE 2 – CANNOT BE REWORKED 4 – RECORD CHANGE 5 – PARTS MADE OK			
		SEE SHEET 1 FOR REV.			

FIND NO.	PART OR IDENTIFYING NO	NOMENCLATURE OR DESCRIPTION	MATERIAL OR CODE IDENT	SPECIFICATION
QTY REQD PER ASSY	LIST OF MATERIALS OR PARTS LIST			

DASH NO.	NEXT ASSY	N/A QTY

DIMENSIONS ARE IN INCHES AND AFTER PLATING
TOLERANCES (UNLESS OTHERWISE SPECIFIED)
X ± .1
XX ± .03
XXX ± .010
ANGLES ± 0.5°
ALL MACHINED SURFACES √

DR | CHK | DSGN | ENGR | PROJ | REL

APPROVED

APPROVED

DO NOT SCALE DRAWING
WORK TO DIMENSIONS SHOWN

DATA MACHINES, INC.
NEWPORT BEACH, CALIF
DIV. OF DECISION CONTROLS, INC

LOGIC DIAGRAM PROCESSOR CONTROL NO. 2 DM 340

CODE IDENT NO	SIZE		REV
21101	D	9100360	C

SCALE

SHEET 3 OF 3

DISTR

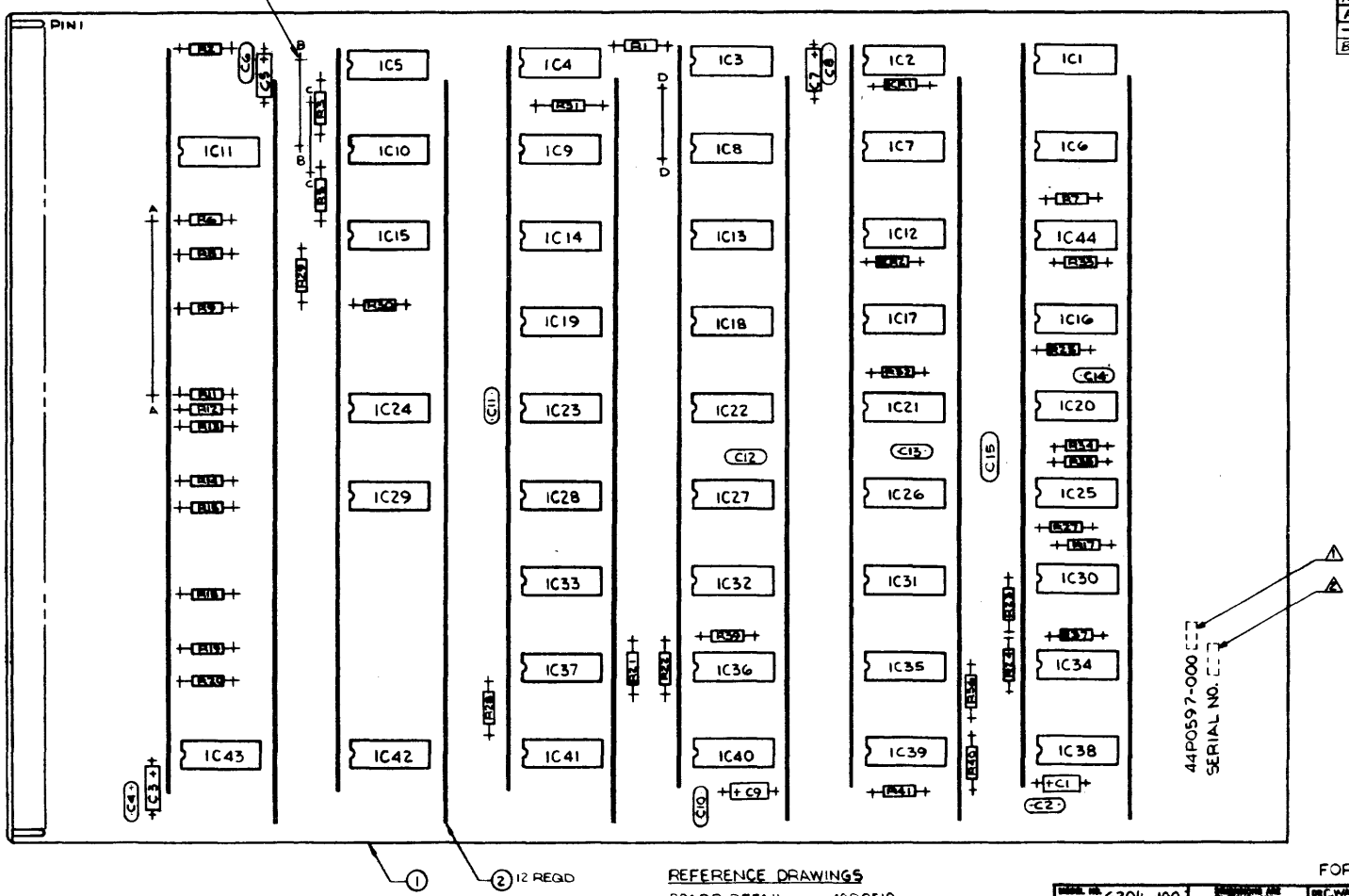

REVISIONS				
SYM	ZONE	DESCRIPTION	APPROVED	DATE
X	C-W	PROTOTYPE RELEASE		
X2		ADDED IC44		
X3		DELETED R26		
X4		DELETED F/N 4		
A		PRODUCTION RELEASE PER EN 80326		
—		DELETED R38 PER EN 80513		
B		ADDED C15 PER EN 80832		

FOR PARTS LIST SEE 44P0597

△2 MARK SERIAL NO. WHERE SHOWN, USING .12 HIGH PERMANENT CHARACTERS.

△1 MARK REVISION LETTER OF PARTS LIST TO WHICH PART WAS MANUFACTURED. APPROX. WHERE SHOWN IDENTIFICATION TO BE .12 CHARACTERS AND PERMANENT.

NOTE: UNLESS OTHERWISE SPECIFIED

REFERENCE DRAWINGS

BOARD DETAIL	40D0510
PHOTO MASTER	97D0709
LOGIC DIAGRAM	91D0361
SOLDER MASK	97D0711
SILK SCREEN	97D0710

MODEL NO. 620/L-100
NEXT ASSY 01A1277
MATERIAL
FINISH

DIMENSIONS ARE IN INCHES AND AFTER FINISHING
TOLERANCES UNLESS OTHERWISE SPECIFIED
.X ± .1
.XX ± .03
.XXX ± .010
ANGLES ± 0°
BREAK ALL SHARP EDGES .005 R APPROX
DO NOT SCALE DRAWING

DR C. WARNER 10-19-71
CHK 1-12-72
DSGN —
ENGR 1-14-72
APPD 1-18-72
APPD

THIS DOCUMENT MAY CONTAIN PROPRIETARY INFORMATION AND SUCH INFORMATION MAY NOT BE DISCLOSED TO OTHERS FOR ANY PURPOSE OR USED TO PRODUCE THE ARTICLE OR SUBJECT, WITHOUT WRITTEN PERMISSION FROM VSM

TITLE
PROCESSOR CONTROL NO.3
DM341 ASSEMBLY

CODE IDENT NO. 21101 | SIZE D | DWG NO 44D0597 | REV B
SCALE 2/1 | SHEET 1 OF 1

CAUTION: EN 83307
AFFECTS THIS DWG.

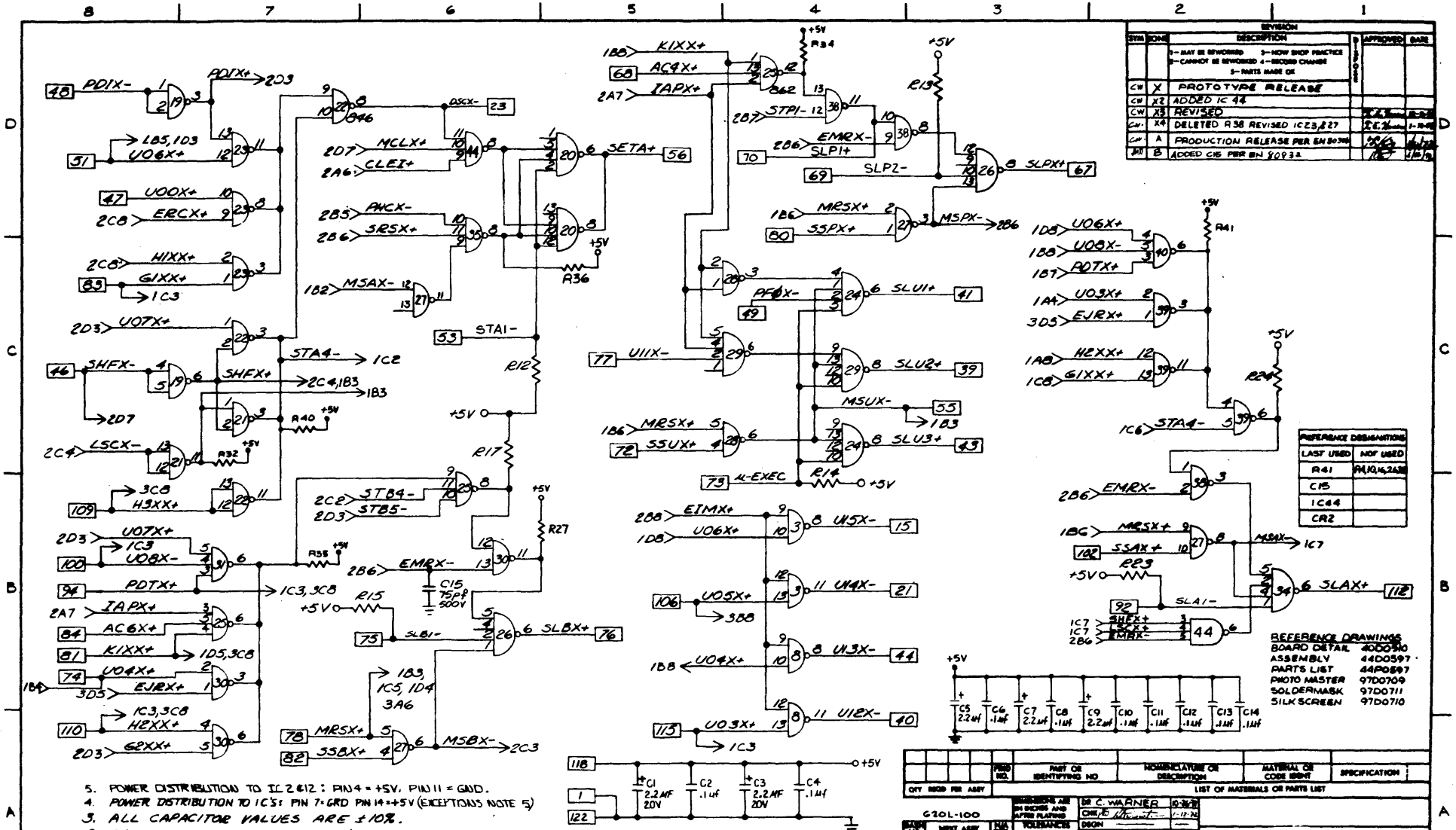

REVISION					
SYM	ZONE	DESCRIPTION (1–MAY BE REWORKED 3–NOW SHOP PRACTICE 2–CANNOT BE REWORKED 4–RECORD CHANGE 5–PARTS MADE OR)		APPROVED	DATE
CW	X	PROTOTYPE RELEASE			
CW	X2	ADDED IC 44			
CW	X3	REVISED			
CW	X4	DELETED R38 REVISED IC23,827			
CW	A	PRODUCTION RELEASE PER EN 80308			
JW	B	ADDED C15 PER EN 80932			

REFERENCE DESIGNATIONS	
LAST USED	NOT USED
R41	R4,10,14,26,38
C15	
IC44	
CR2	

REFERENCE DRAWINGS

BOARD DETAIL	4DD010
ASSEMBLY	44D0597
PARTS LIST	44P0597
PHOTO MASTER	97D0709
SOLDERMASK	97D0711
SILK SCREEN	97D0710

5. POWER DISTRIBUTION TO IC 2 & 12 : PIN 4 = +5V, PIN 11 = GND.
4. POWER DISTRIBUTION TO IC'S: PIN 7 = GRD PIN 14 = +5V (EXCEPTIONS NOTE 5)
3. ALL CAPACITOR VALUES ARE ±10%.
2. ALL RESISTORS ARE 1.0K, ¼ W, ±5%.
1. THE SYMBOLS XXX> AND —>XXX INDICATE A SIGNAL SOURCE AND FLOW LOCATION CODE. THE FIRST DIGIT INDICATES SHEET NO., THE LETTER A HORIZONTAL ZONE AND THE SECOND DIGIT A VERTICAL ZONE.

QTY REQD PER ASSY	FIND NO.	PART OR IDENTIFYING NO	NOMENCLATURE OR DESCRIPTION	MATERIAL OR CODE IDENT	SPECIFICATION
LIST OF MATERIALS OR PARTS LIST					

G20L-100

FIND NO.	NEXT ASSY	QTY REQ
-	44D0597	REF

DR C. WARNER 10-26-72
CHK 1-12-73
DSGN
ENGR 1-18-73
PROJ 1-12-73
RELEASED

LOGIC DIAGRAM-
PROCESSOR CONTROL NO.3
DM341

CODE IDENT NO	SIZE	DWG NO	REV
21101	D	91D0361	

SCALE NONE SHEET 1 OF 5

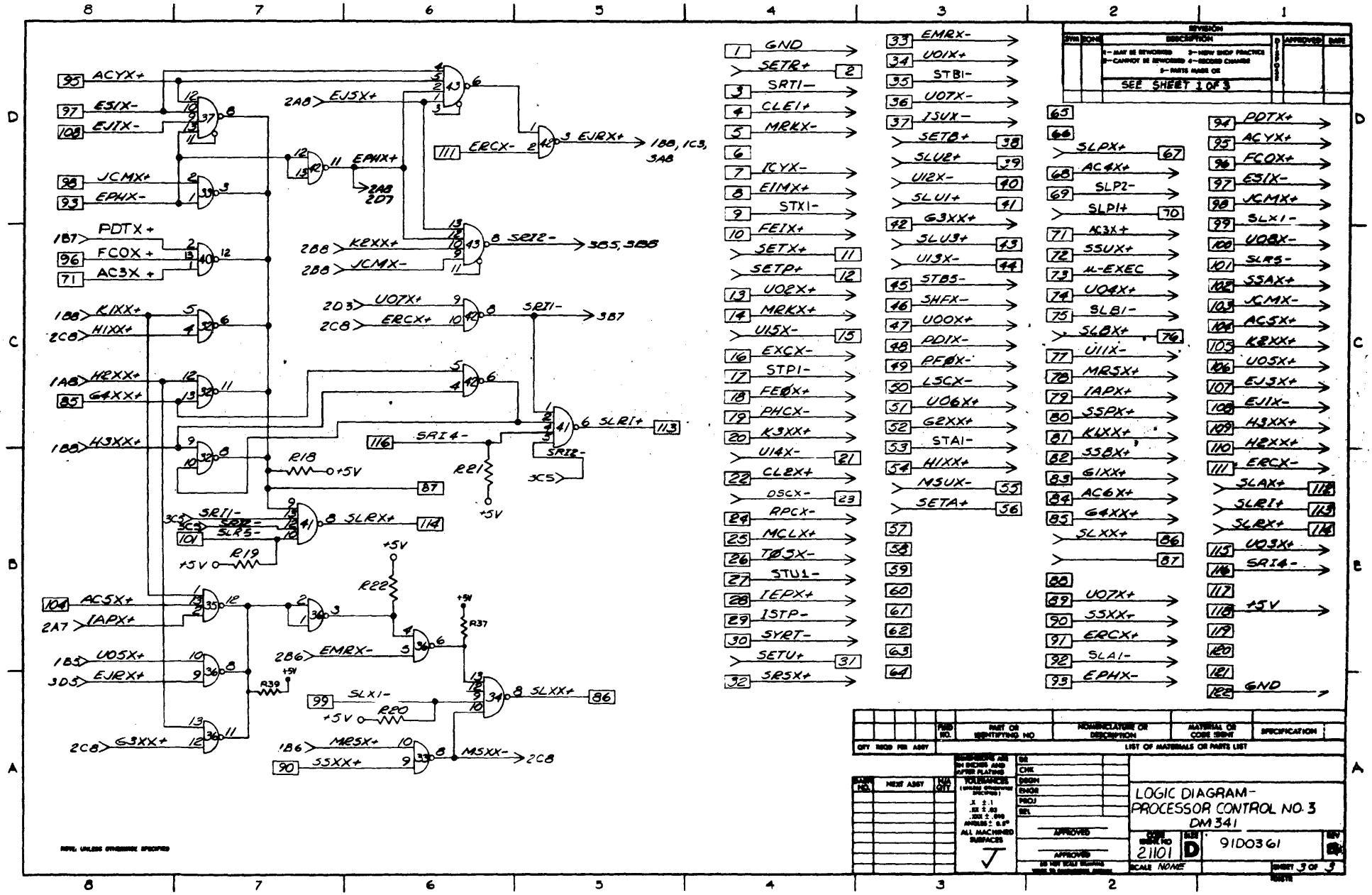

SEE SHEET 1 OF 3
LOGIC DIAGRAM-
PROCESSOR CONTROL NO. 3
DM341
21101
D
91D0361
SCALE NONE
SHEET 3 OF 3
LIST OF MATERIALS OR PARTS LIST
ALL MACHINED SURFACES