DOLCH
LOGIC INSTRUMENTS, INC.

LOGIC ANALYZER

LAM 4850

TABLE OF CONTENTS

1 GENERAL 1-1

1.1 INTRODUCTION 1-1
1.2 GENERAL 1-1
1.3 SPECIFICATIONS 1-2

1.3.1 SIGNAL INPUTS 1-2
1.3.2 SAMPLING 1-2
1.3.3 TRIGGERING 1-3
1.3.4 SOURCE AND REFERENCE MEMORIES . . . 1-3
1.3.5 COMPARE FUNCTIONS 1-4
1.3.6 DISPLAY FORMATS 1-4
1.3.7 MISCELLANEOUS 1-5

2 INSTALLATION 2-1

2.1 INITIAL INSPECTION 2-1
2.2 POWER REQUIREMENTS 2-1
2.3 ENVIRONMENTAL CONSIDERATIONS 2-1
2.4 PRELIMINARY CHECK-OUT 2-1
2.5 SIGNAL CONNECTIONS 2-3

2.5.1 INPUT SIGNALS 2-3
2.5.2 OUTPUT, CONTROL AND BUS INTERFACE SIGNALS 2-4
2.5.3 TRIGGER OUTPUTS 2-4

3 DESCRIPTION OF CONTROLS AND CONNECTORS 3-1

3.1 THE FRONT PANEL CONTROLS AND CONNECTORS 3-1
3.2 THE KEYBOARD 3-1

3.2.1 COLOR CODE 3-2
3.2.2 FUNCTIONAL GROUPING 3-3

3.3 THE REAR PANEL CONTROLS AND CONNECTORS . 3-6

4 MENU PROCESSING 4-1

4.1 INTRODUCTION 4-1
4.2 LABEL SPECIFICATION AND PROGRAMMING 4-1

4.2.1 "SPECIFY PARAMETER (INC/DEC) ENTER" 4-1
4.2.2 "SPECIFY FIELD ENTER" 4-2
4.2.3 "SPECIFY DIGIT ENTER" 4-2
4.2.4 "SPEC FIELD,BASE,POL ENTER" 4-2
4.2.5 THE - SPECIFY - ENTER KEY 4-2
4.2.6 ERROR MESSAGES 4-2

TABLE OF CONTENTS
(Continued)

4.3 THE TRACE MENU 4-3

4.3.1 CONFIGURATION AND SELECTION OF INPUTS AND RECORDING MEMORY 4-3
4.3.2 SPECIFICATION OF TRACE START. 4-6
4.3.3 4-6
4.3.4 SELECTION OF INPUT CONDITIONS 4-6
4.3.5 SELECTION OF CLOCK AND CLOCK QUALIFIER PARAMETERS 4-7

4.4 THE TRIGGER MENU 4-8

4.4.1 THE PASS CONTROL 4-11
4.4.2 CODE BASE SELECTION 4-11
4.4.3 PRETRIGGER DATA AND THE DELAY COUNTER 4-11
4.4.4 WINDOW TRIGGERING 4-12
4.4.5 TRIGGER TRACING 4-13

4.5 THE COMPARE MENU 4-14

4.5.1 SEGMENT LENGTH 4-17
4.5.2 REFERENCE SEGMENT LOCATION. 4-17
4.5.3 CHANNEL SELECTION 4-17
4.5.4 SKEW TOLERANCE. 4-18
4.5.5 LABEL C 4-18

5 DISPLAY FORMATS AND MARKERS 5-1

5.1 THE TIMING DIAGRAM 5-1

5.1.1 TIME DISPLAYED 5-1
5.1.2 CHANNEL SELECTION AND RECONFIGURATION 5-2
5.1.3 THE TRIGGER MARKER 5-4
5.1.4 THE CURSOR 5-4
5.1.5 THE CURSOR "SET" MARKER 5-5
5.1.6 ADDRESS BASE SELECTION 5-5

5.2 THE LOGIC STATE LIST 5-5

5.2.1 LIST PROGRAMMING 5-5
5.2.2 THE TRIGGER MARKER 5-6
5.2.3 THE CURSOR 5-7
5.2.4 THE CURSOR "SET" MARKER 5-7
5.2.5 ADDRESS BASE SELECTION 5-7

TABLE OF CONTENTS
(Continued)

6 SPECIAL APPLICATIONS 6-1

6.1 "GLITCH" CATCHING 6-1

6.2 GROUND "NOISE" MEASUREMENTS 6-2

APPENDIX A

LAM 4850 RS232 MACRO INSTRUCTIONS A-1

SECTION 1: GENERAL

1.1 INTRODUCTION

Logic analyzers have quickly become the most important tool available to the digital equipment specialist. Whether you use it to develop new systems or trouble shoot old systems, you will soon find it to be truly indispensible. The LAM 4850 is a third-generation product which brings together features and performance unavailable elsewhere.

To utilize these features, you must take the time to both learn what they are and understand how to call the programs. The time invested in a thorough reading of this manual will yield an immediate return. The LAM 4850 has many modes of operation, configurations, and features which will help you solve even the most subtle software or hardware problem. We hope that you will find the material presented below informative and easy to understand. Like our products, we are continually refining our manuals and solicit your comments. Continue reading for the details on how the LAM 4850 will help you solve your logic analysis tasks with speed and ease.

1.2 GENERAL

The LAM 4850 is a 48 channel logic analyzer. For convenience, each input port takes 8 inputs, and there are six input ports on the front panel. Clock and clock qualifiers enter through a rear panel port. Internally, the analyzer is divided into three memory blocks, 16 bits wide and 1024 bits (words) deep, and each memory block can be clocked independently with external or internal clocks.

These three memory blocks can be organized in five ways. "Menus" are used to display the various choices you have and guide you in the set up procedure. The TRACE menu is used to set up the desired configuration.

A logic analyzer may be thought of as a memory through which the 48 channels of data are streaming. Triggering the analyzer means the opposite to triggering an oscilloscope, since when we trigger, we stop the stream - literally freezing time - so that we may then examine the interval of time before and after the trigger.

A four-level sequence must be satisfied by the input data prior to triggering the logic analyzer. To aid you with the choices, a Trigger Menu is available.

After we have captured the time around the trigger event (or after it, if desired) we then call upon the powerful compare and search features found in the COMPARE Menu. To allow the most sophisticated searching of data to be done, a Reference Memory is used. Troubleshooting intermittents is simple with the "baby sitting" features found in both the Trigger Menu and the Compare Menu.

In the timing mode, a cursor with powerful features is available.

No state of the art logic analyzer would be complete without data communication and control ports, so users of IEEE bus and RS-232 as well as video output need not worry. Soon, personality probes and disassembler firmware will be available for many popular microprocessors.

We suggest that you read the next section briefly, since some of the terminology may be new for you and make specifications and features temporarily meaningless. Review them again after you have read Sections 4 and 5.

1.3 SPECIFICATIONS

1.3.1 SIGNAL INPUTS

Number:	54; including 48 data, 3 external clocks and 3 clock qualifiers.
Impedance:	50 k, 5 pF at the probe tip.
Threshold:	Each group of 16 inputs can be assigned one of the following four references: - TTL (Preset to +1.4 volts) - V1 & V2, each programmable from -9.9 volts to +9.9 volts in 0.1 volt increments. - POT, a front panel 10-turn potentiometer which ranges from 0 to +10 volts with .01 volt resolution.
Maximum Voltage:	± 50 volts continuous; ± 250 volts transient.

1.3.2 SAMPLING

Internal Clock:	User programmable from 50 MHz (20 ns) to 2 Hz (500 ms). **NOTE:** 50 MHz ONLY AVAILABLE IN TRACE MENU SEQUENCES 4 AND 5.
External Clock:	One of three independent external clock sources can be user programmed and assigned to each input group with positive or negative edge active.
External Clock Frequency:	Trace menu sequences 1, 2, and 3; DC to 25 MHz. Trace menu sequences 4 and 5; DC to 50 MHz.
Set Up Time:	Data must be present 5 ns before active edge of clock selected.
Hold Time:	Data must be present 2 ns after active edge of clock selected.
Qualifiers:	Each external clock can be conditioned by a true-when-high or true-when-low qualifier. This performs a clock gating function.
Data Skew:	Channel to channel, 2 ns typical.

Latch Mode:	Whenever an even number of threshold transitions occur between two successive clock intervals, an input latch stores the state opposite that stored at the previous clock interval, thus detecting and recording "Glitches". Minimum Detectable Glitch: 5 ns with 250 millivolts threshold overdrive.

1.3.3 TRIGGERING

Sequential Trigger Event Levels:	Four sequential trigger event levels may be specified to complete the sequential trigger process. A "then" or "then not" algorhythm may be specified for each trigger event level.
Word Size:	Each sequential trigger word may be user specified up to 48 bits wide.
Code Selection:	Each trigger word may be user specified in binary, hexadecimal or octal code.
Pass Counters:	Each sequential trigger event level has an independent user programmable event counter ranging from 1 to 255 counts. During the trigger process, real time pass counting is displayed.
Restart Trigger:	The fourth trigger event level may be set to perform a "restart" function.
Recording Delay:	After the sequential trigger process, a trigger delay from 0 to 4095 counts of internal or external clock may be selected before the recording is started.
Trigger Output:	Two rear panel BNC connectors (A&B) provide a TTL signal. A is active high with every detected trigger word. B is active high after a sequential trigger process is completed.

1.3.4 SOURCE AND REFERENCE MEMORIES

Size:	48 bits by 1024 words recording (source) and 48 bits by 1024 words reference memory.
Organization:	Three blocks of 16 channels each with five different recording patterns.
Simultaneous Clock:	Each of the three 16 channel recording blocks may be independently assigned an internal or one of three external clock sources.

1.3.5 COMPARE FUNCTIONS

Halt if: Each time a trigger sequence (and delay) is completed, the unit arms itself and acquires new data in source memory which is compared to reference memory. Further recording is stopped if conditions previously specified, (R≠S, R=S) are met.

The RS 232 (V 24) interface is activated dumping non-compare data during the "Halt if" mode. The output data includes the contents of the cycle and event counters.

Count if: Each time a trigger sequence (and delay) is completed, the unit arms itself and acquires new data in source memory which is compared to reference memory. Each recording action increments a 5 digit cycle counter. An event counter (0 to 9999) is incremented whenever conditions are met which agree with those previously specified (R≠S, R=S).

Search: Searches and compares reference and source memories and relocates the cursor to the next compare or non-compare location.

Compare Limits: Any portion of the source memory may be compared to any portion of the reference memory. When the selected condition occurs (R=S; R≠S), this location and the following 19 locations are displayed.

Compare Skew: Operates in conjunction with "Compare Limits". Checks if source and reference data matches within a selected skew range. Any skew from ± 0 to ± 9 can be assigned.

1.3.6 DISPLAY FORMATS

Menus: Three menus showing all recording, trigger and compare operations, may be displayed.

Timing Diagram: Sixteen channels of timing data from pods A and B may be displayed. Horizontal expansion of X1, X10, or X20 may be selected. Channels may be repositioned or blanked as desired. Cursor and cursor-set markers permit direct time measurement and display. Binary cursor and cursor-set location data is displayed.

Data List: User programmable selection of binary, hexa-decimal, octal, ASCII or two optional codes. Positive or negative logic may be assigned to each input group.

1.3.7 MISCELLANEOUS:

Instrument Size:

	H	W	D
CM	20	46	52
IN	7.87	18.11	20.47

Weight: 16 kg (35.3 lbs).

Power: 115 volts (± 10%), 47-63 Hz; 150 watts.

Temperature Range: 0 to 50 degrees centigrade ambient temperature.

4-14

SECTION 2: INSTALLATION

2.1 INITIAL INSPECTION

Upon receipt, inspect the shipping container for damage and check the accessories supplied with the instrument against the packing list.

Perform a preliminary check-out procedure on the instrument in accordance with the instructions which follow. If the instrument is damaged, any accessories are not found, or the unit does not perform in accordance with the check-out procedure, notify your Dolch representative immediately.

In the case of physical damage, notify the shipping agent as well and keep the packaging material available for inspection by the shipper's representative. In any case, it is advisable to keep the shipping carton and packing material, for use should the need ever arise to reship the instrument.

2.2 POWER REQUIREMENTS

Obtain the power cord from one of the accessory bags shipped with the instrument. Attach the power cord to the instrument at the rear panel connector labeled POWER. Toggle the front panel POWER switch to off (down) and plug the power cord into a grounded power receptacle supplying the appropriate voltage and frequency. The instrument will operate properly with an input voltage fluctuation of $\pm$ 10 of nominal. Total power consumption is 150 watts.

2.3 ENVIRONMENTAL CONSIDERATIONS

The instrument will work properly under ambient temperature conditions from 0-50 degrees centigrade. However, normal procedures should be observed to ensure that the side and bottom louvers and fan intake remain unobstructed during operation. If the fan should become inoperative, it is recommended that the unit not be used until the unit has been repaired.

2.4 PRELIMINARY CHECK-OUT

This preliminary check-out procedure will verify that the basic instrument functions are operating properly. The first part of this procedure will be performed <u>without</u> the ALP 80 probe pods attached. This check-out procedure <u>must</u> be followed in the exact sequence in which it is presented.

TABLE 1

PRELIMINARY CHECK-OUT PROCEDURES

PROCEDURE		INSTRUMENT RESPONSE	
A.	Turn the POWER switch to the on position.	1.	The red POWER light should light and the cooling fan should be heard.
		2.	The message "Power Up Self Test Complete", should appear on the screen after a few seconds. This will be followed by an indication of the software revision level of the unit, i.e., "2D" or "3G". If this does not appear, recycle the power switch.
B.	Press and release the uP RESET button on the rear panel.	1.	The screen should blank and the message indicated in A.2. should reappear.
C.	Press the green - **INITIAL** - [TEST] key on the keyboard, and hold momentarily until a single "OK" appears in the test pattern.	1.	The message "KEYBOARD TEST" will appear on the screen, followed by a pattern in the configuration of the keyboard. The pattern should consist of all "XX", with the exception of an "OK" in the position corresponding to the - **INITIAL** - [TEST] key.
D.	Press all of the keys with the exception of the - **SPECIFY** - [OFF/X] key.	1.	Proper key function will be verified by an "OK" display on the screen in the position of the key pressed. The number of keys tested will appear at the top of the screen.
E.	Press the - **SPECIFY** - [OFF/X] key.	1.	The keyboard test pattern will disappear and will be replaced by the trace menu.
F.	Press the grey - **MENU** - [TRACE] menu key.	1.	The screen image will roll and reappear.
G.	Press the green - **TRACE** - [START] key.	1.	The message "Slow Clock on E & F" will appear flashing at the top of the screen. **NOTE:** If the instrument contains software revision 3G, this message will not appear.
H.	Press the red - **TRACE** - [STOP] trace key.	1.	The screen image will roll and reappear without the flashing message.
I.	Press the blue - **TMG** - [X1] key.	1.	A pattern will appear on the screen with 16 lines of data labeled A0-A7 and B0-B7. All data lines should indicate a steady zero state.

2.5 SIGNAL CONNECTIONS

2.5.1 INPUT SIGNALS

The LAM 4850 accepts three types of inputs; data, clock, and clock qualifier signals. These signals enter the instrument via the ALP 80 Active Logic Probe pods. The ALP 80 pods can be used interchangeably as the interface for these signals. During use, you may find it convenient to label the pods as to input function for reference purposes.

The input connectors and pods connectors are keyed to indicate proper mating.

CAUTION

PROPER MATING SHOULD BE VERIFIED BEFORE CONNECTION IS ATTEMPTED TO AVOID POSSIBLE EQUIPMENT DAMAGE.

2.5.1.1 Data Signals

There are six INPUT connectors on the front panel, labeled A through F.

The INPUT connector labels correspond to the pod assignments used in the various display formats. Pin assignments on the ALP 80 pods refer to the relative binary weights of the inputs:

"0" = LSB = 2^0 = 00000001

"7" = MSB = 2^7 = 10000000

Two ground pin locations are provided on each pod. The ground pins are labeled " 1 ".

2.5.1.2 Clock and Clock Qualifier Signals

An input connector on the rear panel, labeled TRIG/CLK/QUAL, accepts an ALP 80 pod for input of clock and clock qualifier signals. Three external clocks and three clock qualifiers can be connected. The following pin assignments apply to the ALP 80 pod when used for clock and clock qualifier inputs:

Pin		Clock	Pin		Clock Qualifier
0	=	C1	4	=	Q1
1	=	C2	5	=	Q2
2	=	C3	6	=	Q3

Two ground pin locations are provided, labeled " 1 ".

2.5.2 OUTPUT, CONTROL AND BUS INTERFACE SIGNALS

Output, control and bus interface signals are available at the rear panel connectors for various interfacing and control purposes. Figure 2-1 gives the pin designations of the RS 232/V24 connector.

2.5.2.1 External Video Output

The VIDEO output provides standard TTL logic level signals to drive an external monitor.

2.5.2.2 Serial Communication Port

The connector labeled RS 232/ V 24 allows serial data to be sent and received. Data may also be written into the reference memory through a remote terminal. When used with a printing terminal, the instrument can do continuous monitoring of specified data patterns and give a print-out as soon as a fault is detected in this pattern.

2.5.2.3 IEEE - BUS Interface

The connector labeled IEEE-BUS can be used only when the IEEE 488 interface option is installed in the LAM 4850. An "-01" following the serial number of the instrument indicates that the IEEE Bus option has been installed.

The IEEE 488 option will allow full remote programming of all keyboard selectable functions and it will allow data I/O to other IEEE compatible devices.

2.5.3 TRIGGER OUTPUTS

Two trigger outputs are available to allow further analysis of a fault in conjunction with an oscilloscope or other instruments. Trigger outputs are available at BNC connectors on the rear panel. Both trigger outputs are of TTL logic levels.

The connector labeled TRIG-OUT A provides a high to low signal transition whenever a trigger word is recognized. The connector labeled TRIG-OUT B provides a high to low signal transition after the complete sequential trigger process has been completed.

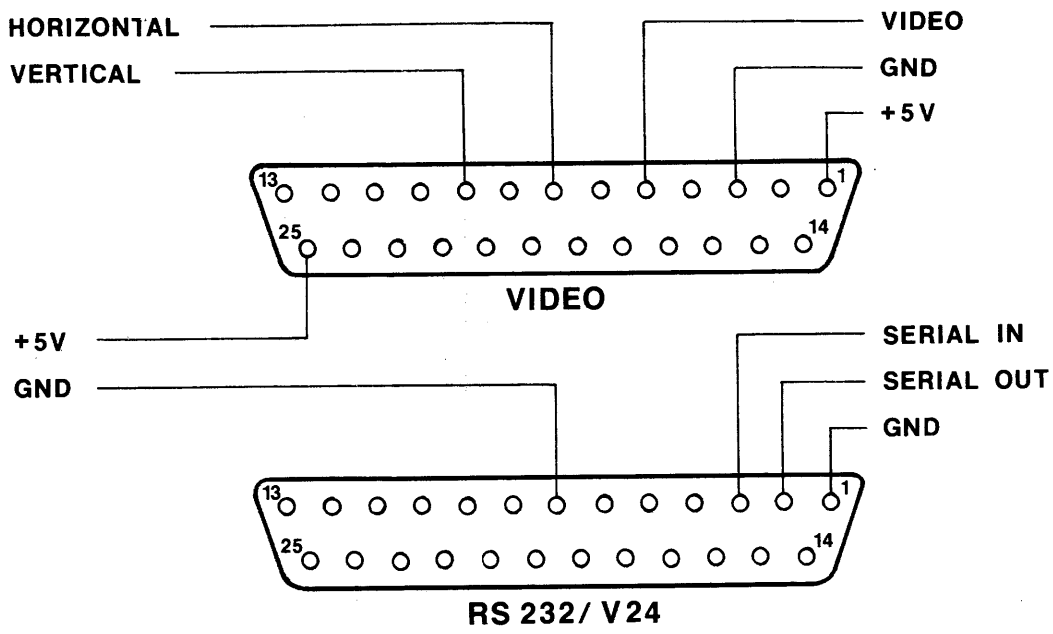
HORIZONTAL
VERTICAL
VIDEO
GND
+5V
13
1
25
14
VIDEO
+5V
GND
SERIAL IN
SERIAL OUT
GND
13
1
25
14
RS 232/ V24

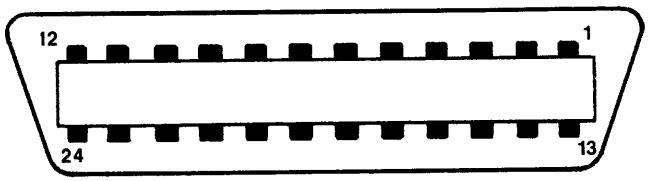
12
1
24
13
IEEE-BUS

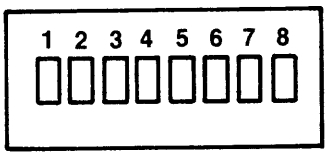
1 2 3 4 5 6 7 8

Figure 2-1

SECTION 3: DESCRIPTION OF CONTROLS AND CONNECTORS

3.1 THE FRONT PANEL CONTROLS AND CONNECTORS

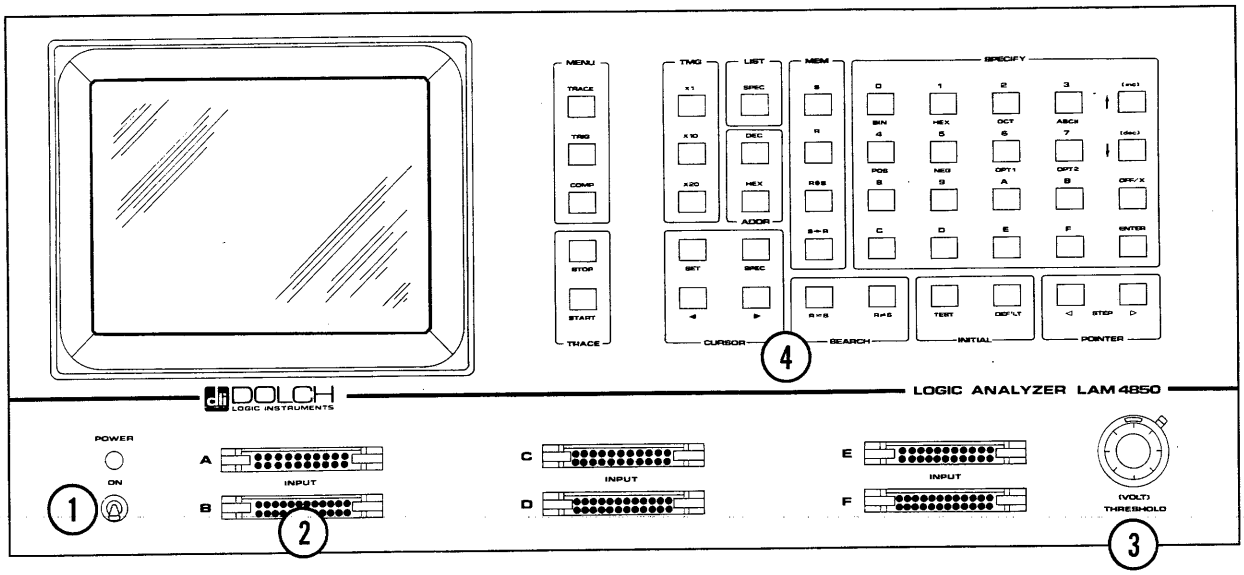

Figure 3-1

1. POWER ON/OFF
2. ALP 80 INPUT CONNECTORS - A THROUGH F
3. THRESHOLD POT
4. KEYBOARD (See Section 3.2)

3.2 THE KEYBOARD

The LAM 4850 uses a keyboard entry system for format programming and display control. The keys are arranged in 11 sections as illustrated in Figures 3-1 and 3-2 . The keys are grouped by function and each key is color coded. Use of the keyboard is simplified by guiding messages presented at the top of the display screen.

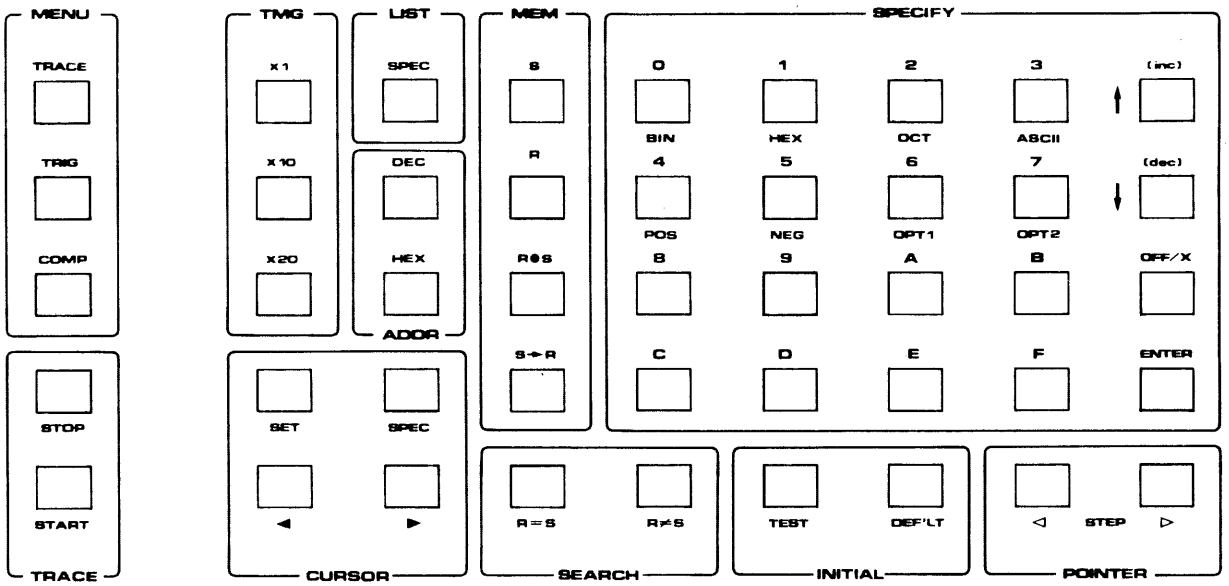

Figure 3-2

3.2.1 COLOR CODE

Each key is color coded by general function. The significance of the various colors is as follows:

Grey- A function which requires further parameter specifications after pressing the key such as - **MENU** -, - **LIST** - [SPEC] , or - **CURSOR** - [SPEC] . Grey keys also provide control functions such as - **CURSOR** - [SET] and - **SEARCH** -.

Blue- Blue denotes functions with immediate execution. These functions are timing display, address base selection, memory selection and control, and parameter entry.

Yellow- Cursor and pointer step control functions.

Black- Parameter specification keys.

Green- System initialization, keyboard test and trace start functions.

Red- Trace stop function.

3.2.2 FUNCTIONAL GROUPING

The keys are arranged into groups of specific functions. A description of each key function follows:

3.2.2.1 Menu Selection

Pressing one of the - **MENU** - keys calls one of three menus to the screen. The menu displays all operator controlled parameters. Interactive menu programming (explained in detail in Section 4) specifies the recording, triggering, and analyzing parameters.

Each menu has a predetermined standard format. The standard parameters are displayed the first time a menu is selected after power up or following microprocessor reset. Each menu can be returned to its standard format by selecting the menu desired and by pressing the - **INITIAL** - [DEF'LT] (default) key. The standard format and a discussion of the parameters which can be modified is presented in Section 4. Menu programming is simplified by prompting messages and a flashing pointer in reverse video.

3.2.2.2 Trace Control

The - **TRACE** - control keys provide the trace start and manual stop functions for data recording. Pressing the - **TRACE** - [START] key will begin the recording process. To interrupt a trace or analyzing process, use the - **TRACE** - [STOP] key. When the instrument completes a trigger process, use of the - **TRACE** - [STOP] key is not necessary as the recording process is completed automatically.

3.2.2.3 Timing Display

The recorded data is displayed in the form of a 16 line timing diagram when one of the - **TMG** - keys is pressed. Three magnification ranges (X1, X10, and X20) on the time axis are available. The timing diagram is only available when trace sequences 4 or 5 have been selected in label "O" of the trace menu.

3.2.2.4 Logic State List Display

Whenever the - **LIST** - [SPEC] key is pressed, a list of recorded data is displayed. The first time the list is called to the screen the code will be in hexadecimal format, positive polarity for all active pods. The list format can be changed by pressing the - **LIST** - [SPEC] key again, and then specifying the pod, polarity, and code desired with the - **SPECIFY** - keys which have red subscripts. The list can be brought back to this standard format at any time by pressing the - **INITIAL** - [DEF'LT] (default) key. The format specify procedure is explained in Section 5.

3.2.2.5 Memory Selection

The LAM 4850 has two independent memories defined as the Source, (S) memory and the Reference (R) memory. The contents of either memory may be displayed in the logic state list, by pressing the - **MEM** - [S] (source) or [R] (reference) key. The timing diagram will display the

contents of the source memory only. If the - **MEM** - [S→R] key is pressed, data from the source memory will be copied into the reference memory.

Data in the source memory can be compared to data in the reference memory on a bit-by-bit basis. Data bits which do not compare will be indicated in reverse video when the - **MEM** - [R ⊕ S] , ("exclusive or") key is pressed.

The compare menu and search functions are also used in conjunction with the memory selection keys. The interaction of the reference, compare and search functions is explained in Section 4.5.

3.2.2.6 Address Base

All addresses may be displayed in either decimal or hexadecimal notation. Pressing either the - **ADDR** - [DEC] or [HEX] key will select the type of notation desired. Address locations will always be presented in hexadecimal notation following power up, microprocessor reset, or after pressing the - **INITIAL** - [DEF'LT] key.

3.2.2.7 Cursor Control

The "Cursor" feature is an operator controlled reference point. It is available on the timing diagram and the logic state list. The cursor may be set at (or moved to) any memory address through the use of the - **CURSOR** - keys. There are three ways to move the cursor. To move the cursor one address, press either the - **CURSOR** - [←] or [→] keys momentarily. To move the cursor continuously, hold either key depressed. The cursor position will first step slowly, and then increase speed. To jump the cursor to a specific address use the - **CURSOR** - [SPEC] key. The desired address is entered by use of the - **SPECIFY** - keys and the jump is executed by pressing the - **SPECIFY** - [ENTER] key. The third way to move the cursor is by means of the memory search function described in Section 3.2.2.8.

The cursor location may be retained as a reference point by pressing the - **CURSOR** - [SET] key. A "curtain" will follow the cursor from the set point as it moves through the address range. Section 5 covers the use and function of the cursor in detail.

3.2.2.8 Memory Search Function

The two keys, - **SEARCH** - [R=S] (reference memory is identical to source) and - **SEARCH** - [R≠S] (reference memory is not equal to the source) provide a convenient way of jumping the cursor to the next memory location where R=S or R≠S. To initiate a search, press one of the - **SEARCH** - keys and then press the - **CURSOR** - [←] or [→] key to select the direction in which the search is to take place. If the search fails to find the condition specified, a "SEARCH UNSUCCESSFUL" message will flash at the top of the display screen. If a search in the other direction is desired, the appropriate - **SEARCH** - key should be pressed again, followed by pressing the - **CURSOR** - key for the opposite direction.

3.2.2.9 Initial Test and Default

Pressing the - **INITIAL** - [TEST] key initiates a keyboard test program. The messsage "KEYBOARD TEST" will appear at the top of the display screen followed by a pattern in the configuration of the keyboard and the number of keys tested. Pressing the remaining keys will verify key function and MPU interface. Pressing the - **SPECIFY** - [OFF/X] key will terminate the keyboard test program.

The menus, logic state list and timing diagram each have a standard default format with a fixed set of starting parameters. This is the format presented immediately following power up. The display may be brought back to this standard format by pressing the - **INITIAL** - [DEF'LT] key. Pressing this key will affect only the data displayed at the moment it is pressed. This has no effect on the source or reference data stored in memory. In order to initialize the entire instrument, you must call all displays to the screen individually and then press the - **INITIAL** - DEF'LT key.

3.2.2.10 Display Pointer Control

Display parameters are specified by indicating the display parameter of interest with the display pointer. The display pointer is a reversed video blinking field when activated. The display pointer may be moved by the - **POINTER** - [←] and [→] keys to the location on the menu or data display which is to be altered by the - **SPECIFY** - section of the keyboard. Whenever a parameter is entered by pressing the - **SPECIFY** - [ENTER] key, the display pointer will be incremented by one location from left to right, or from top to bottom.

3.2.2.11 Parameter Specification

The - **SPECIFY** - section contains the necessary key functions for programming the instrument. Data input is specified via the hexadecimal keys 0 - F. Other parameters may be altered by stepping through the available selections using the - **SPECIFY** - [INC] (increment) or [DEC] (decrement) keys. The sub-functions on keys 0 through 7, indicated in red, are active only after the - **LIST** - [SPEC] key is pressed. Certain parameters may be turned off or a "Don't Care" function entered by use of the - **SPECIFY** - [OFF/X] key. This key also ends the keybord test program. All specified parameters are executed by pressing the - **SPECIFY** - [ENTER] key.

3.3 THE REAR PANEL CONTROLS AND CONNECTORS

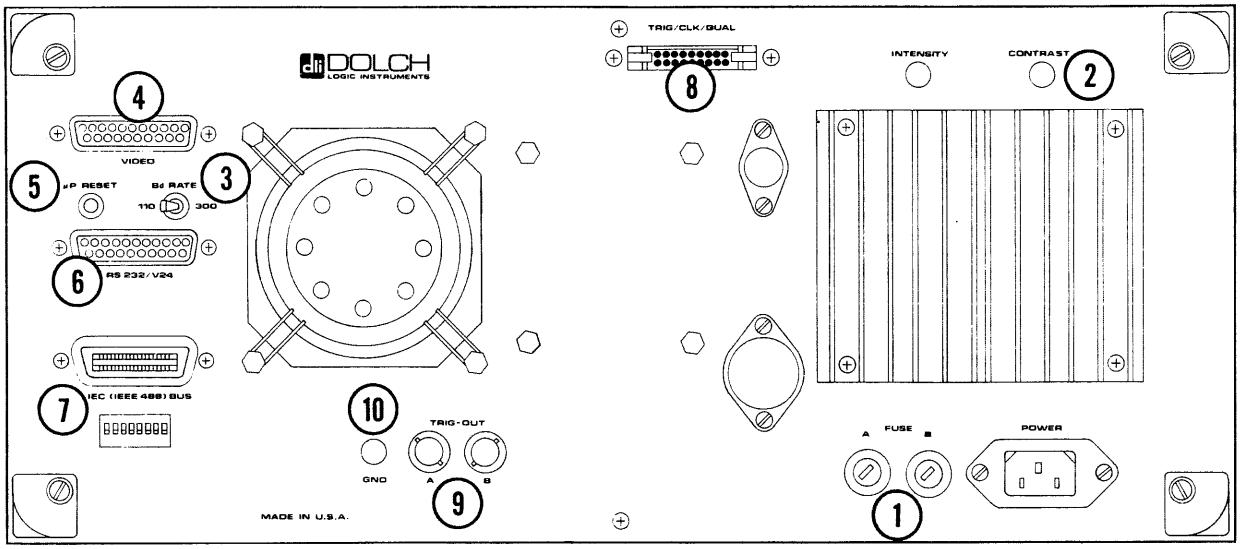

Figure 3-3

1. POWER CONNECTOR AND FUSE HOLDERS
2. VIDEO DISPLAY INTENSITY AND CONTRAST CONTROLS
3. BAUD RATE SELECTION FOR RS 232/V24 REMOTE INTERFACE
4. VIDEO OUTPUT CONNECTOR
5. MICROPROCESSSOR RESET
6. RS 232/V24 STANDARD INTERFACE CONNECTOR
7. IEEE 488 BUS INTERFACE CONNECTOR AND ADDRESS SWITCHES (OPTIONAL)
8. EXTERNAL CLOCK AND CLOCK QUALIFIER INPUT CONNECTOR
9. TRIGGER OUTPUT CONNECTORS
10. CHASSIS GROUND CONNECTOR

SECTION 4: MENU PROCESSING

4.1 INTRODUCTION

Three separate but interacting menus are used to program the LAM 4850. Menus are individually selected by pressing one of the three - **MENU** - keys. The menus allow programming of interacting instrument functions for recording, triggering and comparison of data.

Each menu is an arrangement of parameter fields, which can be altered by use of the keyboard. Parameter fields are identified by corresponding alphabetical or numeric "LABELS". Labels are displayed in reverse video. A label may designate a single parameter field or a series of parameters within a field.

Each menu has a standard format of parameters. The standard format is presented the first time a menu is selected after power-up and will remain in standard format until changed by the operator. A menu can be brought back to standard format by selecting it and pressing - **INITIAL** - [DEF'LT] key. It is not necessary to program a menu unless parameters different from the default conditions are required The standard format will allow the instrument to trace data in an asynchronous mode and display it as a timing diagram or data list. The standard format of each menu is illustrated in the sections which follow.

Menu programming is simplified by prompting messages presented at the top of the display.

4.2 LABEL SPECIFICATION AND PROGRAMMING

Each menu begins with the message "SPECIFY LABEL ≫ ENTER". Major labels on the menus are: TRACE -1 thru 9; TRIGGER -1 thru 5; and COMPARE -A, B, & C. These labels are displayed in reversed video.

A label is specified by pressing the corresponding keyboard number or letter on the - **SPECIFY** - section of the keyboard. The instrument will respond by blinking the selected label in reversed video. A label can also be called by stepping the pointer from one label to another with the - **POINTER** - keys.

Entering a label field is then accomplished by pressing the - **SPECIFY** - [ENTER] key. This will cause the first parameter within that label field to blink, indicating that it can be changed. A message at the top of the display screen will tell you how to accomplish the change. A description of the messages and an explanation of how to select parameters and save them in the unit follows:

4.2.1. "SPECIFY PARAMETER (INC/DEC) ≫ ENTER" -

This message indicates that there are selectable parameter choices available. The choices may be selected and viewed by pressing either the - **SPECIFY** - [INC] or [DEC] keys. When the choice desired is displayed on the screen, it will be saved when the - **SPECIFY** - [ENTER] key is pressed.

4.2.2 "SPECIFY FIELD ≫ ENTER" -

A field is a sub-category within a label. After initially entering a label, the first field within that label will be selected and blinking. If the first field indicated is the field desired, then the - **SPECIFY** - [ENTER] key should be pressed to save that field. Parameters may be selected within a field as described in Section 4.2.1.

4.2.3 "SPECIFY DIGIT ≫ ENTER" -

This message indicates that you should enter binary or hexidecimal data, as appropriate, using the - **SPECIFY** - [0] thru [F] keys and [ENTER] key.

4.2.4 "SPEC FIELD, BASE, POL ≫ ENTER" -

This message indicates that you have the option to change the number base using the - **SPECIFY** - [BIN] , [HEX] , [OCT] , or [ASCII] keys and the polarity using the - **SPECIFY** - [POS] or [NEG] keys. If no change is desired, press the ENTER key.

4.2.5 THE - **SPECIFY** - [ENTER] KEY

In the above cases, the - **SPECIFY** - [ENTER] key has two functions. At the label level it allows you to enter a field within the label. At the field level, it allows you to enter a specific parameter. When at the field level, the - **SPECIFY** - [ENTER] key must be pressed to leave the field. This is true whether or not the parameter has been changed.

4.2.6 ERROR MESSAGES

If, when using the menus, an error is made, an error message will flash on the display. The error message will disappear when a proper selection has been made.

4.3 THE TRACE MENU

The trace menu provides selection of parameters needed for data acquisition from the system under test. These parameters are presented within fields under labels 0 thru 9. The label functions fall into several basic categories as follows.

4.3.1 CONFIGURATION AND SELECTION OF INPUTS AND RECORDING MEMORY

Label "0" is used to arrange the inputs and recording memory into one of five configurations. In configurations 1, 2, & 3, the inputs are arranged into three groups of two (A&B, C&D, & E&F) corresponding to the input pods. Each group can then be programmed at labels 3, 4, & 5, for different variations of trigger level, input mode, clock (asynchronous or synchronous) and sample rate (internal asynchronous clock speed). Each channel will record 1024-8 bit bytes of data. The maximum asynchronous sample period is 50 ns. The variation among trace sequences 1, 2, & 3, is the position of the fixed pre-trigger delay in the synchronous mode. (In sequences 1, 2 and 3, a data list is available for each channel, a timing diagram display however, is not available.)

In configurations 4&5, the inputs and recording memories are arranged into two groups of two (A&B, & E&F) again corresponding to the input pods. However, the memory of C&D is now assigned to group A&B. This expands the depth of the A&B group to 2048 bytes. Each of the two groups can be programmed for proper input conditions at labels 3&5. (Label 4 is not used for this configuration since it corresponds to inputs C&D.) Each channel will trace 8 bits of data (2048 bytes deep on A&B; 1024 bytes deep on E&F). The maximum asynchronous sample rate for group A&B is 20 ns. The only variation between trace sequences 4&5 is the position of the fixed pre-trigger delay in the synchronous mode. A data list is available for all four channels. A timing diagram is available for channels A&B only. The data list is 2048 bytes deep for channels A&B and 1024 bytes deep for channels E&F.

IMPORTANT

After the input configuration has been selected as described above, any group of inputs can be switched off when label 2 has been selected. In input configuration 4 or 5, when the A&B group of inputs only will be used, it is required that group E&F be switched off. If this is not done, automatic trace stop will not be achieved and the message "SLOW CLOCK ON E&F" will flash on the display screen. This is normal operation for the unit since group E&F cannot be internally asynchronously clocked in trace sequences 4&5.

TRACE MENU

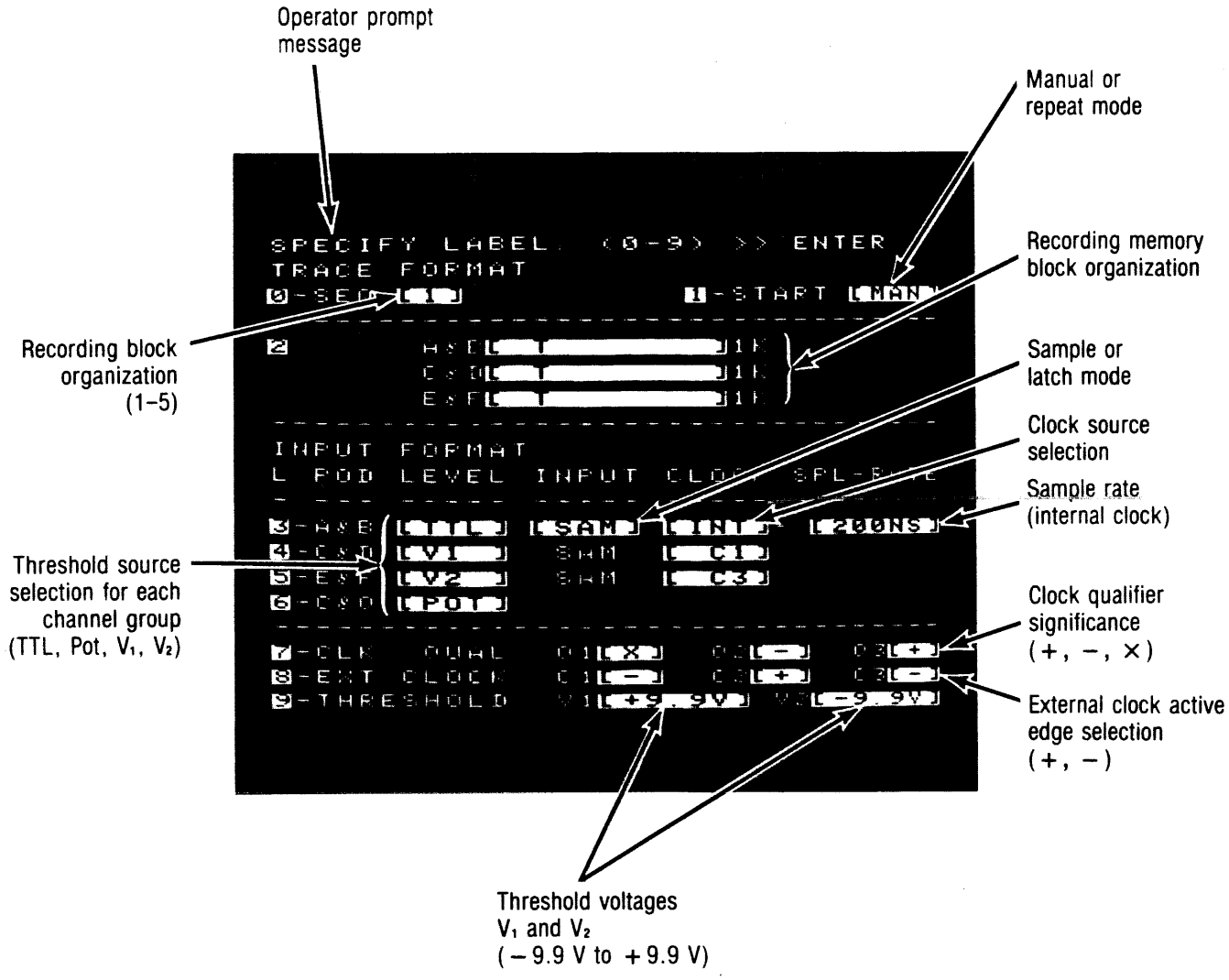

Figure 4-1

PROGRAMMABLE PARAMETER OF THE TRACE MENU

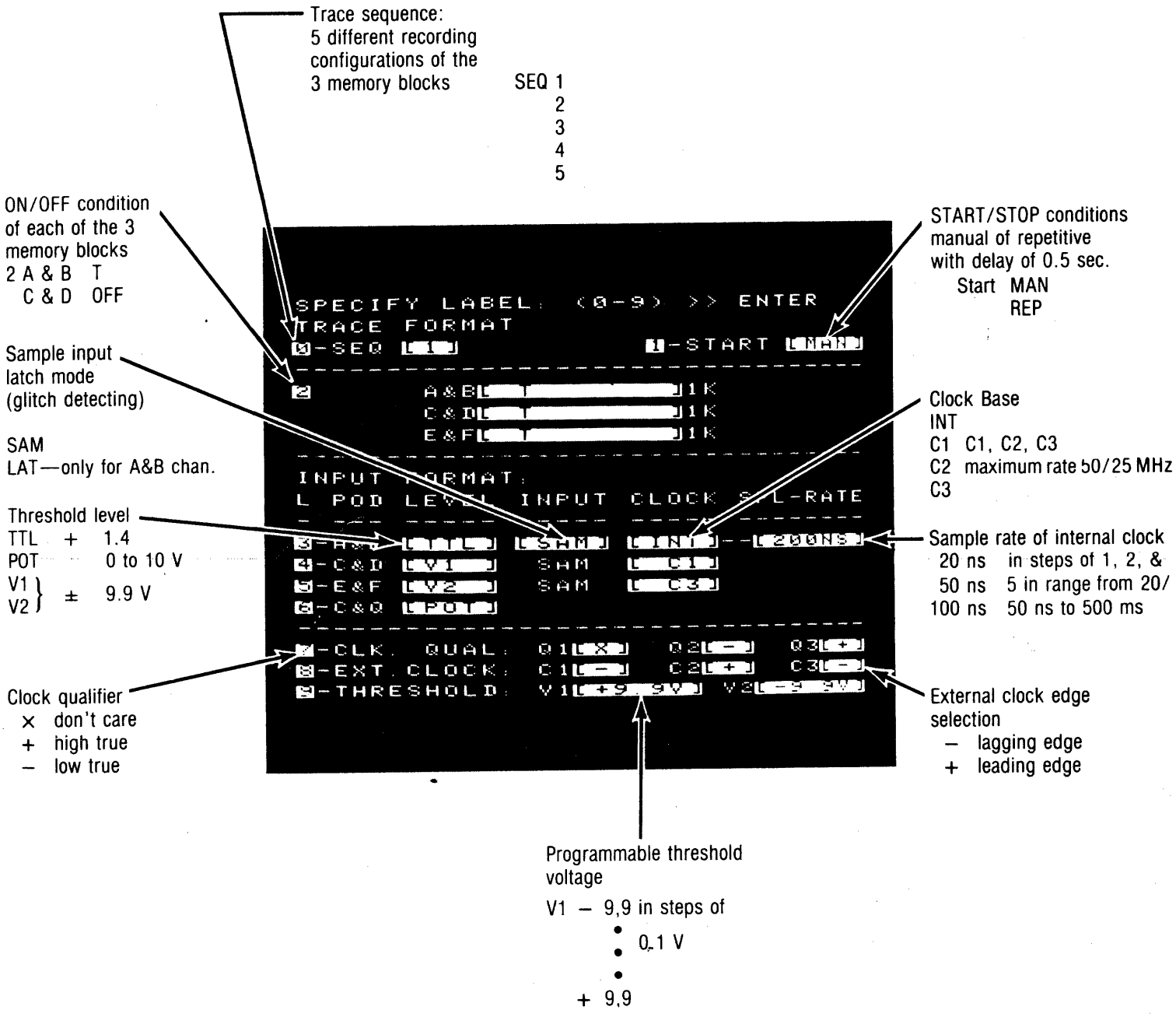

NOTE: Menu programming is simplified by promoting messages at the top of the display.

Figure 4-2

4.3.2 SPECIFICATION OF TRACE START

Entering label 1 allows selection of either Manual or Repetitive trace starting. When Manual is selected, pressing the - **TRACE** - [START] key will initiate the trace sequence. Holding this key will result in repetitive starting. Repetitive starting may also be selected by specifying REP. To stop the repetitive trace starting, press the - **TRACE** - [STOP] key.

4.3.3 The fields of label 2 display the memory configuration selected in label 0, while the label allows channels to be turned off.

4.3.4 SELECTION OF INPUT CONDITIONS

The first two parameters of labels 3, 4 (when C&D are active), and 5 provide programming of the probe input conditions for logic level and input mode.

4.3.4.1 Level

One of four independent logic threshold levels can be selected for each active input group.

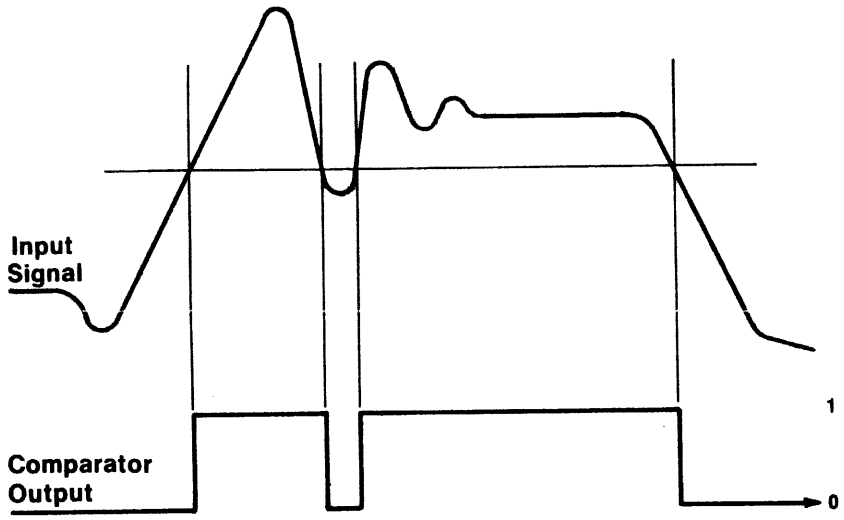

THRESHOLD DETECTION

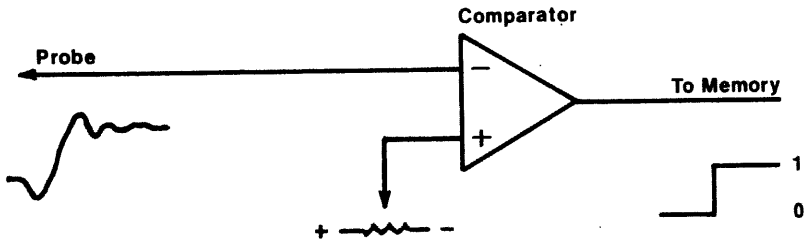

Figure 4-3

4.3.4.1.1 TTL- 1.4 volts

4.3.4.1.2 V1 or V2- voltages which may be programmed via label 9. V1 and V2 are programmable from +9.9 volts to -9.9 volts in 0.1 volt increments.

4.3.4.1.3 POT- the front panel threshold pot may be set from 0 to +10 volts with .01 volt resolution.

4.3.4.2 Input

The sample (SAM) input mode is the input mode used when not looking for glitches. Another mode, called the latch mode, usable on channels A&B only, is especially useful in detecting glitches. This will be discussed in Section 6.1.

4.3.5 SELECTION OF CLOCK AND CLOCK QUALIFIER PARAMETERS

The CLOCK and SPL-RATE fields of labels 3, 4 (when active), and 5; and labels 6, 7, and 8, are used to set-up clock and clock qualifier requirements.

4.3.5.1. Asynchronous Operation

In asynchronous operation, the INT (internal) clock is selected for the clock parameter in labels 3, 4 (when active), and 5; along with an internal clock period. The available clock periods are: 50 ns to 500 ms for trace sequences 1, 2, or 3; and 20 ns to 500 ms for trace sequences 4 or 5. Labels 6, 7, and 8, have no effect on asynchronous operation.

4.3.5.2 Synchronous Operation.

In the synchronous mode, data is sampled in synchronization with a clock from the system under test. One of three external clocks may be selected designated as C1, C2, or C3. In addition, a gating function may be used on the selected clock with a clock qualifier. The clock qualifier can be a (+), positive true signal; (-), negative true signal; or, (x), don't care, as selected in label 7. The logic level of the clocks and clock qualifiers is determined in label 6. TTL, V1, V2, or POT threshold conditions can be selected in label 8, (+), for positive true logic; (-), for negative true logic. Clock and clock qualifier signals are entered through an ALP 80 Logic pod which is attached to an input on the rear panel (Item 8, Fig. 4). The following pin assignments apply to the ALP 80 when used for clock and clock qualifier inputs.

0= C1	4= Q1
1= C2	5= Q2
2= C3	6= Q3
3= GROUND	8= GROUND

4.4 THE TRIGGER MENU

A key feature of the LAM 4850 is its four word sequential trigger capability. Using the trigger menu, you can specify up to four trigger words which must be recognized one or more times in sequence in order to trigger the instrument. Each trigger word can be up to 48 bits in width, depending upon the trace sequence selected. The trigger words can be programmed in hexidecimal, binary or octal.

Trigger words 2, 3, and 4, can be designated as a "THEN" or a "THEN NOT" trigger. As a "THEN" trigger, the trigger word must occur before incrementing to the next trigger level. As a "THEN NOT" trigger, the trigger word must not occur at a trigger level before incrementing to the next trigger level.

The fourth trigger level may be programmed as a "RESTART" trigger word. If the "RESTART" word occurs at any time before triggering takes place, the instrument will automatically jump back to trigger level 1.

Each trigger level has a PASS function for "START" and "THEN" trigger functions. The PASS number can be programmed from 1 to 255 counts. The trigger word must occur the number of times that it is programmed into the PASS function before jumping to the next trigger level. A "pass counter" will indicate the number of times a word has occurred after a trace sequence has begun. The "pass counter" will jump to the next trigger level and start counting over after the PASS conditions of the previous level have been fulfilled.

A zero programmed into the PASS function is invalid and will cause a error condition in the instrument. When you select a "THEN NOT" or "RESTART" trigger function, the number of passes is set to 1 automatically, and cannot be changed.

The trigger menu is arranged into four sections labeled 1 through 4. Each label contains a number of fields. Field 8 designates the type of trigger; i.e., "START", "THEN", "THEN NOT", or "RESTART". Field 9 is the PASS number. Fields A through F are the individual trigger word segments corresponding to inputs A through F.

After all trigger levels have been satisfied, an additional delay can be added, if desired. Label 5 allows selection of the additional delay. Upon entering label 5, the delay clock is first selected; i.e., INT, C1, C2 or C3. The delay is then programmed as an additional delay to the fixed delay, determined by the trace sequence selected on the Trace Menu, Label 0. The quantity in parenthesis represents the fixed delay selected in the trace menu.

TRIGGER MENU

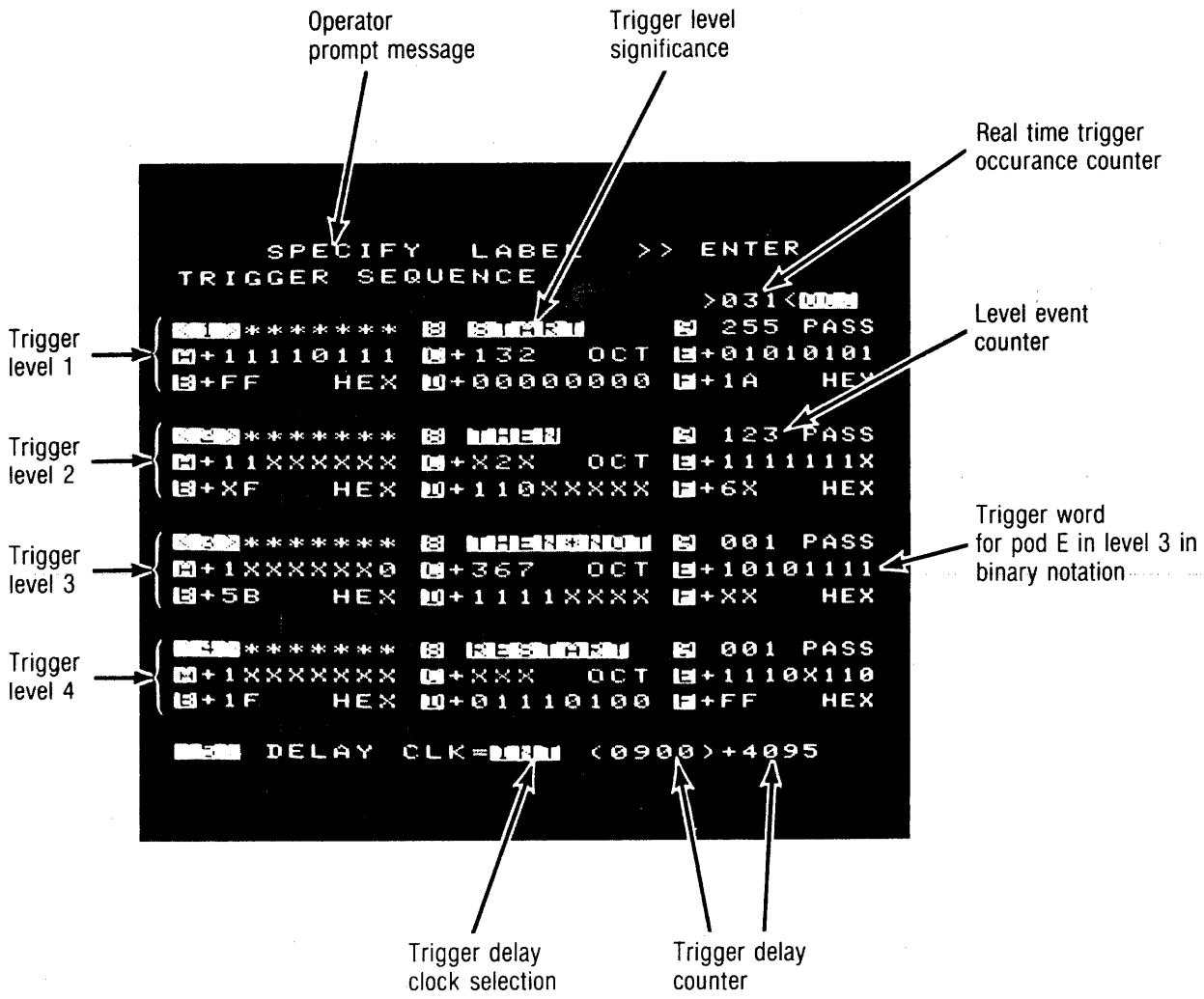

Figure 4-4

PROGRAMMABLE PARAMETER OF TRIGGER MENU

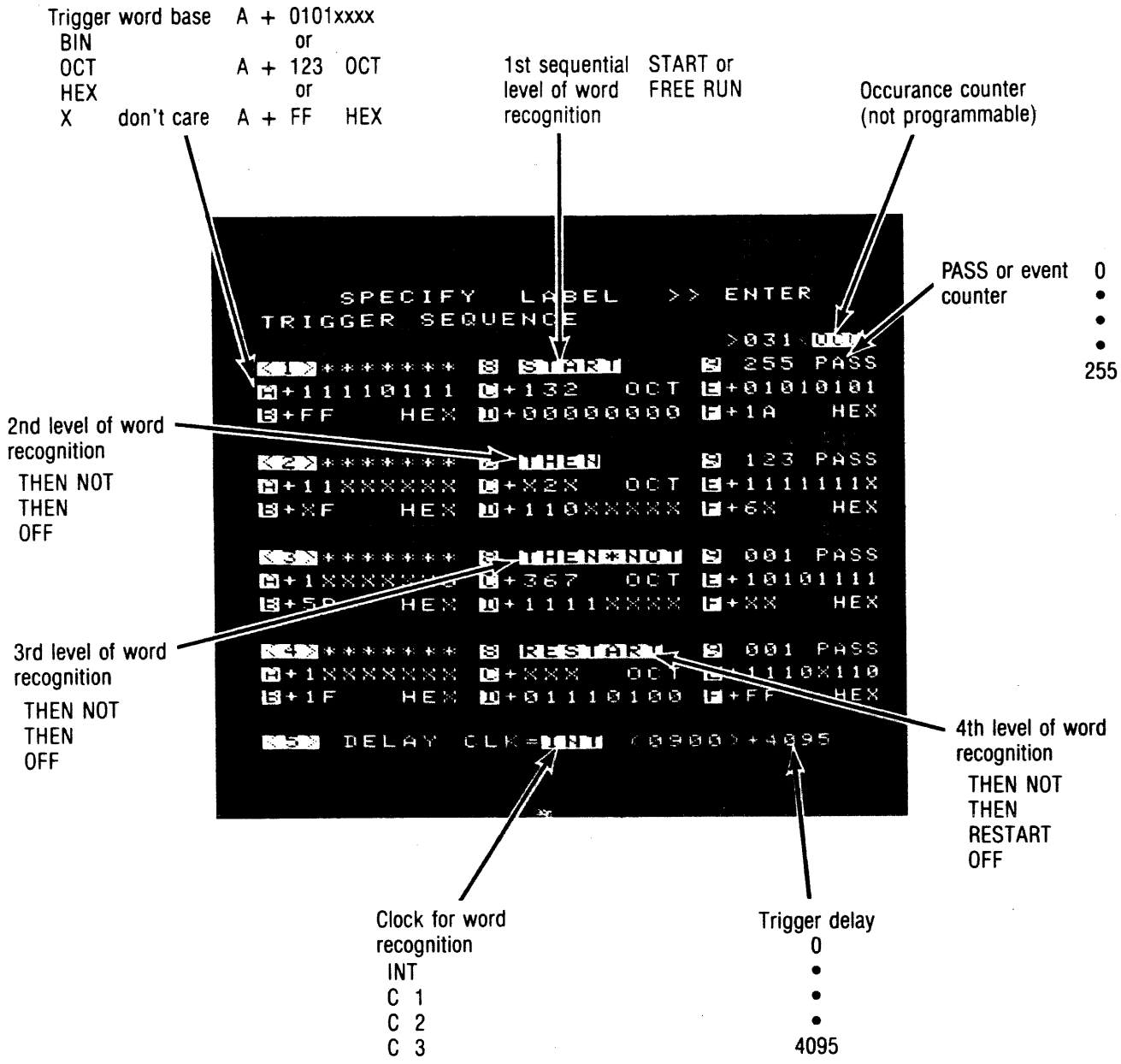

Note: Menu programming is simplified by prompting messages at the top of the display.

Figure 4-5

4.4.1 THE PASS COUNTER

Associated with every sequential level (1-4) is a "Pass" or event counter. The value set forth in these fields (Label 9) determines how often a specified word has to occur until a level has successfully been executed. The trigger-trace monitor as explained later will give you the actual occurrence of the various words in sequence.

Please note that the 3 digit pass counters have a binary range of 8 bits subsequently limiting the pass counting range to 255 counts and that a zero pass count is illegal and will be rejected. Whenever you select a "then not" or "restart" sequence the pass counter of that particular level will automatically be set to 1 count and cannot be altered.

4.4.2 CODE BASE SELECTION

Specifying a code base helps significantly to simplify trigger menu set ups. As the display pointer addresses one of the pod fields (A-F) a prompting message appears at the top of the screen.

The reverse video field of the message notes the previous selected base code (HEX, BIN, OCT) as well as the logical polarity. To modify the base code or its polarity enter directly your new choice. You will note that independent from the trigger sequence all fields of the modified pod will change.

4.4.3 PRETRIGGER DATA AND THE DELAY COUNTER

In order to use the delay counter successfully you should have a good understanding of the basic function of the serial data acquistion of a logic analyzer. Very much in contrast to an oscilloscope which you have always used, the trigger of a logic analyzer does not start a trace (or deflection like a scope).

The trigger stops data acquisition, and the memory holds data stored before the trigger was received.

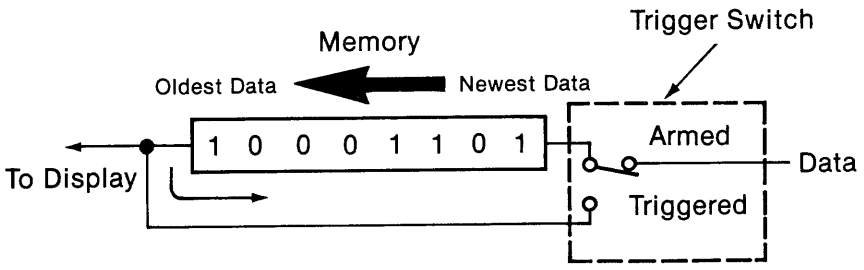

BASIC TRIGGER CONCEPT

Figure 4-6

This unique characteristic allows you to look backward in time to examine the logic states or timing relations that preceded the trigger.

Because the data sequences can be very long and memory capacity is finite (1024 to 2048 byte depending on trace sequence), it is desirable to have some means of positioning the memory "window." The objective of a trigger delay counter is to accomplish that positioning.

How it works is fairly simple: whenever a trigger is finally recognized the recording is not immediately stopped, a predetermined number of clock pulses are counted down by the delay counter resulting in a displacement of the trigger within or even outside of the recording window.

You will notice, that increasing the delay count will move the trigger from right to left.

Since the LAM 4850 was designed with an ease of operation in mind you will find that there are actually two independent means controlling the amount of trigger delay.

The first means is selected with the "trace sequence" field (Label 0) of the Trace menu. According to the various sequences, the trigger position is relocated within the recording window. Marked by a "T" in the graphics of Label 2 you can see if the trigger is in the center, at the beginning or at the end. This fixed trigger position which results from the trace sequence selection of the trace menu is shown in brackets in Label 5 of the trigger menu.

Setting up additional delay counting will move the trigger to the left (in the timing diagram).

If you have exceeded the range the initial triggerpoint will leave your acquisition window. If this is the case, the Trigger Address will indicate xxxx. The range of the trigger delay counter is limited to 12 bit binary counting (4095 decimal). The source, used for counting down the trigger delay can only be one of the actual recording clocks.

In other words, a clock which is active at least at one of the recording blocks can be selected with the field of Label 0.

4.4.4 WINDOW TRIGGERING

The first sequential level always defines a start condition. Starting means looking for further trigger information after finding word number one X number of times.

All following words can be assigned to a "then" or "then not" sequence. In addition to that, word number 4 can also be set up to perform a "restart". This "restart" capability allows you to define a window in your data stream which you exclusively analyze to find a trigger sequence. The limits of that trigger window are defined by the start and restart conditions. This window triggering permits the analyzer to search for a trigger sequence in a limited portion of a microprocessor's program execution, which is another powerful way to home in on your system problems.

4.4.5 TRIGGER TRACING

The "Trigger Trace Monitor" was invented in an effort to simplify the use and improve the handling of the complex trigger structure of the LAM 4850. The "Trigger Trace Monitor" is a real time counter of word-recognitions within a trigger sequence. The count is displayed as a 3 digit number and appears at the top of the pass counter digits. A tracking of loops and word sequences is thus made easy. Flashing at a high repetition while the tracing is in process you can follow the program execution of your system undertest.

Even if a final trigger is never met, the occurrence count of various sequences can help you significantly in debugging your system.

4.5 THE COMPARE MENU

Intermittent failures are the most troublesome type of problem because they occur infrequently and might not show up during normal measurements. The compare menu feature of the LAM 4850 provides the means for automatic and repeated comparison of data to known good data stored in a reference memory. The instrument may be programmed to continue sampling data until a compare error occurs, at which time the instrument will either halt and store the data for analysis or simply count the occurrence.

The compare function is a powerful tool when used in conjunction with the trigger function, as the unit can selectively trigger on a normal block of data from a suspected portion of the program, using word trigger data programmed into the trigger menu. This known good data is then transferred to the reference memory inside the LAM 4850. Now, using the compare function, in the non-comparison mode, the analyzer will first wait for data which meets the triggering requirements set up in the trigger menu; then, when the data arrives, it will compare the captured data to the normal data in the reference memory. If the data is different, the analyzer will halt or store the data for comparison, or, count the occurrence dependent on compare menu programming.

The compare menu is divided into three sections, labeled A, B, and C. The LAM 4850 can be programmed to compare two independent segments of source data to reference data. These independent sections are programmed at labels A and B. Each segment is specified by a parameter stating the number of locations to be compared (field 0) as well as the start and stop addresses of the reference and the source memory (fields 1 and 2). It should be noted that the compared segments in the reference and source memories do not have to be in corresponding locations. Any address group within the range of source memory can be compared to any address group, of the same size, within the range of reference memory. This function is illustrated in Figure 4-9.

COMPARE MENU

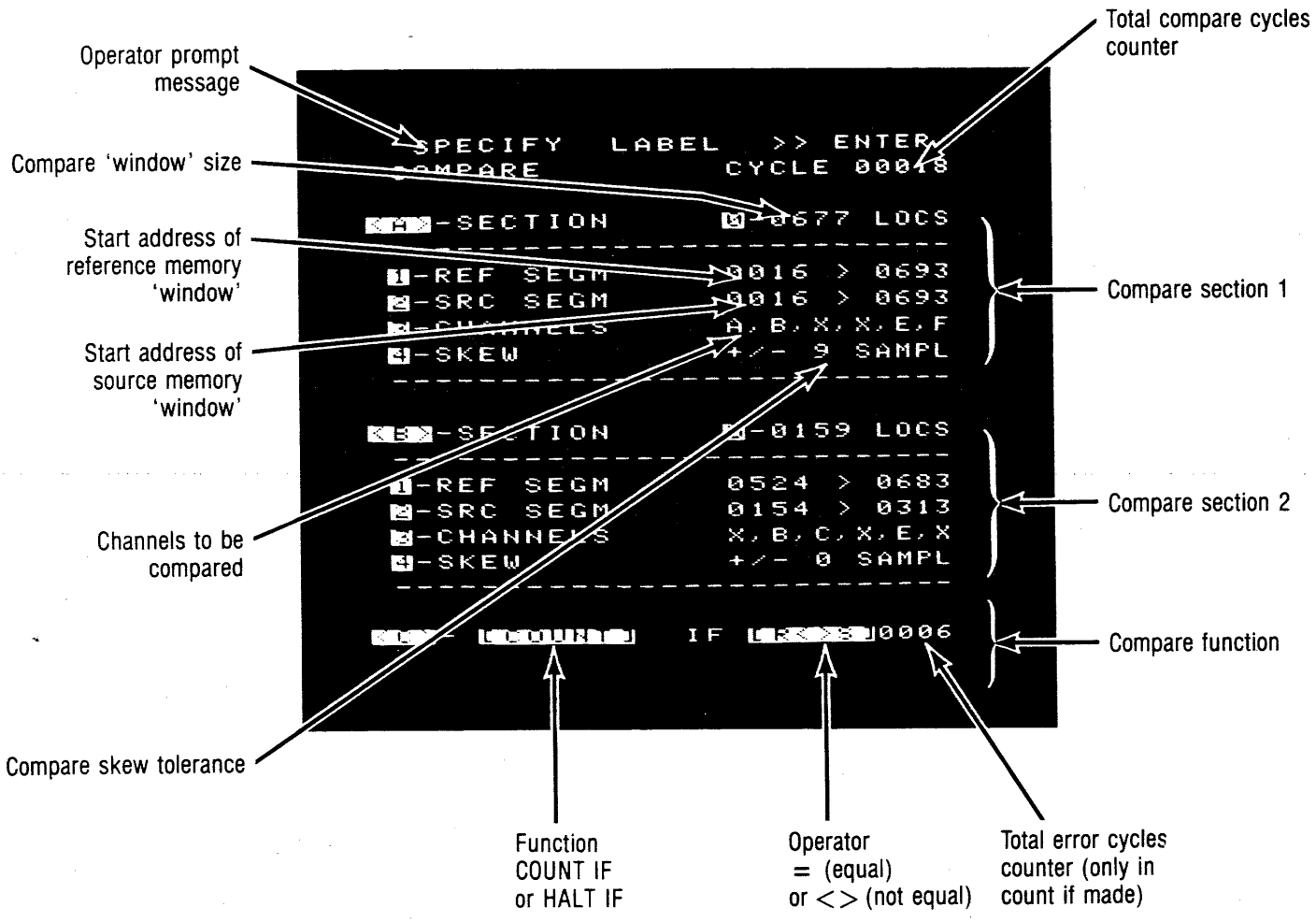

Figure 4-7

PROGRAMMABLE PARAMETER OF COMPARE MENU

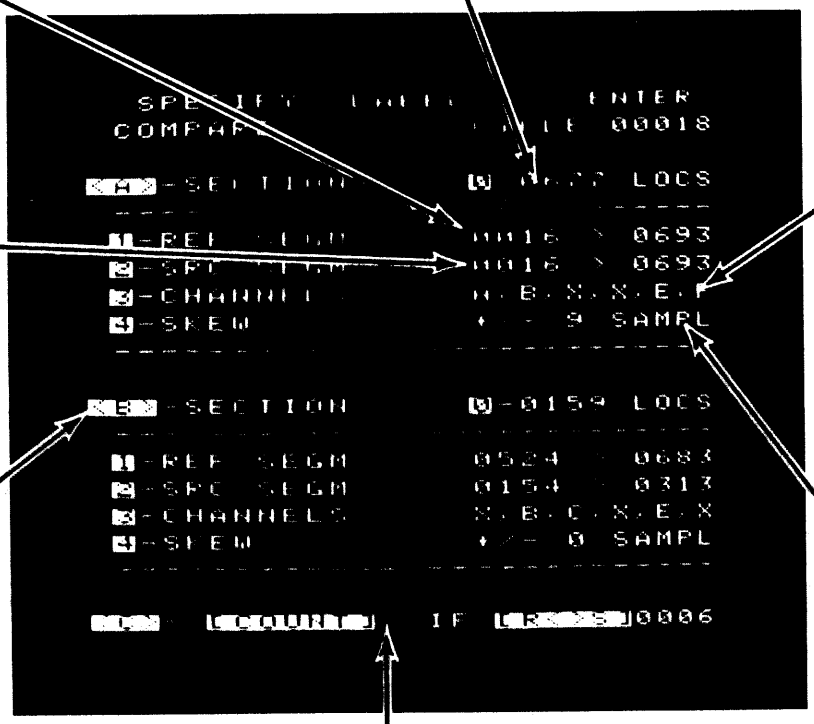

Number of locations to be compared
DEC or HEX
0000 000H
• •
• •
• •
1998 7CEH

Start address of reference memory
DEC or HEX
0000 000H
• •
• •
• •
1998 7CEH

Start address of source memory
0000 000H
• •
• •
• •
1988 7CEH

The B section has the same parameter range as the A section

Channel group selection
A, B, C, D, E, F
•
•
•
X, B, C, X, X, F
(X = OFF)

Sample clock skew
+/− 0
• •
• •
• •
+/− 9

Compare and Autostart mode
HALT if R< >S
HALT if R = S
COUNT if R< >S
COUNT if R = S

NOTE: Menu programming is simplified by promoting messages at the top of the display.

Figure 4-8

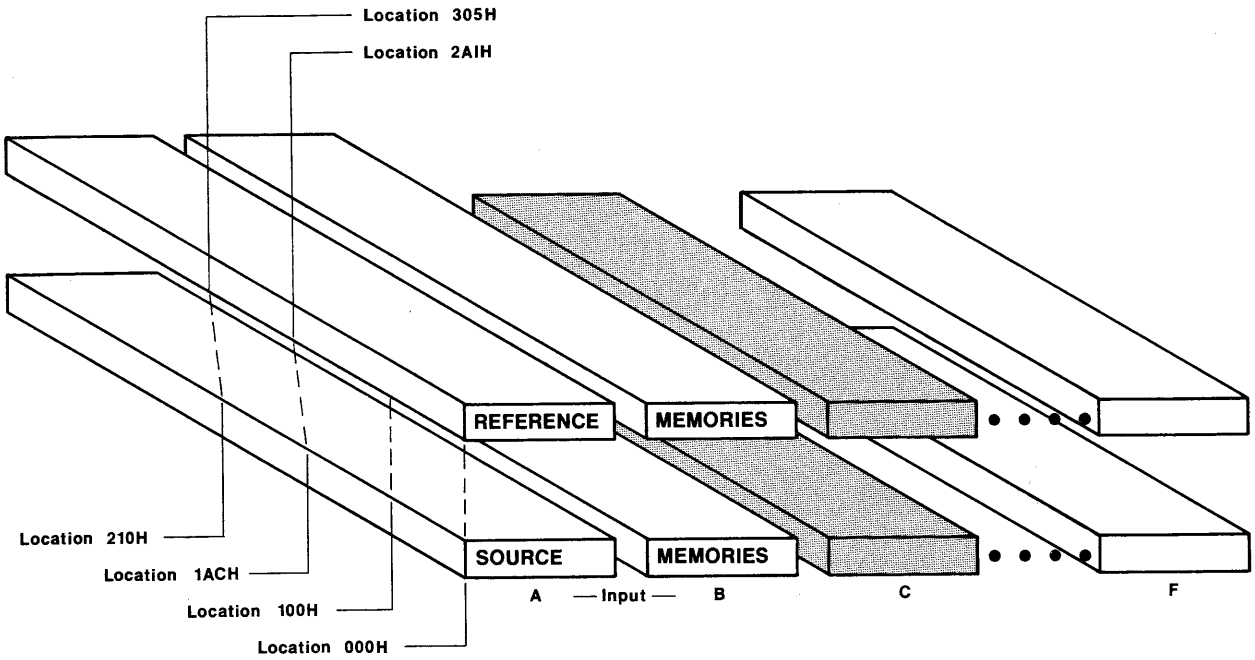

Figure 4-9

4.5.1 SEGMENT LENGTH

The length of the segment comparison is programmed in field 0 of Labels A&B. The length may be programmed from zero to 1024 locations, (000H to 400H) in trace formats 1, 2, and 3, and from zero to 2048 locations, (000H to 800H) for input channels A&B in trace formats 4 and 5.

4.5.2 REFERENCE SEGMENT LOCATION

The starting location of the reference and source segment to be compared is programmed under Fields 1 and 2 respectively of Labels A&B. The end locations will be the starting addresses plus the section lengths selected under Field 0, and will automatically be adjusted when the starting locations are specified.

4.5.3 CHANNEL SELECTION

The width of the word used for comparison can be adjusted under Field 3. The option is given in Field 3 to selectively turn off any of the available input channels, thus controlling the word width. The effect of this feature is illustrated in Figure 4-9. Individual bits within a channel can in effect be turned on or off, by selectively manipulating the state of the individual pod input. The ability to restrict a compare action to individually selected channel groups and bits is a powerful tool. For example, if you are studying the timing relation of a handshake activity on a bus, only one or two control lines may be of interest for a compare process. In that case, only those channels related to this handshake will be used.

4.5.4 SKEW TOLERANCE

The amount of data "SKEW" which will be tolerated between the source and reference data is adjustable under Field 4. Allowable skew limits from ± 0 to ± 9 clock pulses can be selected.

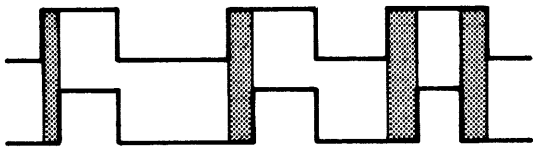

Figure 4-10

This feature allows you to set up a timing window in which data transitions may occur or may not occur. The relative displacement of data retained in the reference and data stored in the source memory is compared, word by word. Particularly useful for asynchronous data sampling, this timing tolerance feature is quite powerful when "baby sitting" systems that have timing-critical data transactions.

4.5.5 LABEL C

Label C is used to determine the way in which the compare function will be used. It can be used in one of four different ways.

4.5.5.1 Halt if R≠S

The analyzer will repeatedly sample and compare the source memory data to the reference memory data. When it finds a point where reference memory data is not equal to the source memory data within the memory locations specified, the sampling process will halt and all data will be saved for further analysis.

4.5.5.2 Halt if R=S

The analyzer will repeatedly sample and compare the source memory data to the reference memory data. When it finds a point where reference memory data is equal to the source memory data within the memory locations specified, the sampling process will halt and the data will be saved for further analysis.

4.5.5.3 Count if R≠S

Works as described in Section 4.5.5.1 except instead of halting the sampling process it will increment a counter shown under compare menu Label C and continue to sample.

4.5.5.4 Count if R=S

Works as described in Section 4.5.5.2 except instead of halting the sampling process it increments a counter shown under compare menu label C and continues to sample.

SECTION 5: DISPLAY FORMATS AND MARKERS

5.1 THE TIMING DIAGRAM

A timing diagram is an effective way of displaying data for analysis relating to hardware timing. The magnification facilities (X10 and X20) enable detailed examination of timing and phase relationships between signals. Selection of the timing diagram is made simply by pressing the - **TMG** - [X1] , [X10] , or [X20] key.

The timing diagram is available only for input channels A and B and in display formats 4 or 5 (Trace Menu, Label 0) only. The diagram thus presented is of 16 bits, labeled A0 through A7 and B0 through B7 from pods A&B respectively, each input is 2048 (800H) bits long.

5.1.1 TIME DISPLAYED

The amount of time displayed on the horizontal axis is dependent upon the sample rate. Full scale time ranges from 40u seconds to 17 minutes are available. The full scale time is calculated by multiplying the sample rate by the address base of 2048:

i.e. 20 ns x 2048 = 40 u seconds

500 ms x 2048 = 17 minutes

5.1.2 CHANNEL SELECTION AND RECONFIGURATION

The input sequence can be arranged to allow you to study the relationship of any two or more inputs. You may also blank any unwanted inputs in order to clear the screen of unwanted data. To blank or relocate an input, proceed as follows:

5.1.2.1 Move the pointer marker from its home position located above A0 with the - **POINTER** - keys to the display location to be changed.

5.1.2.2 To change the position of the data, enter the data line that you wish to be displayed at the position of the pointer with one of the - **SPECIFY** - [0] through [7] and [A] or [B] keys, or to blank an input, press the [OFF/X] key.

5.1.2.3 Press the - **SPECIFY** - [ENTER] key.

TIMING DIAGRAM (1)

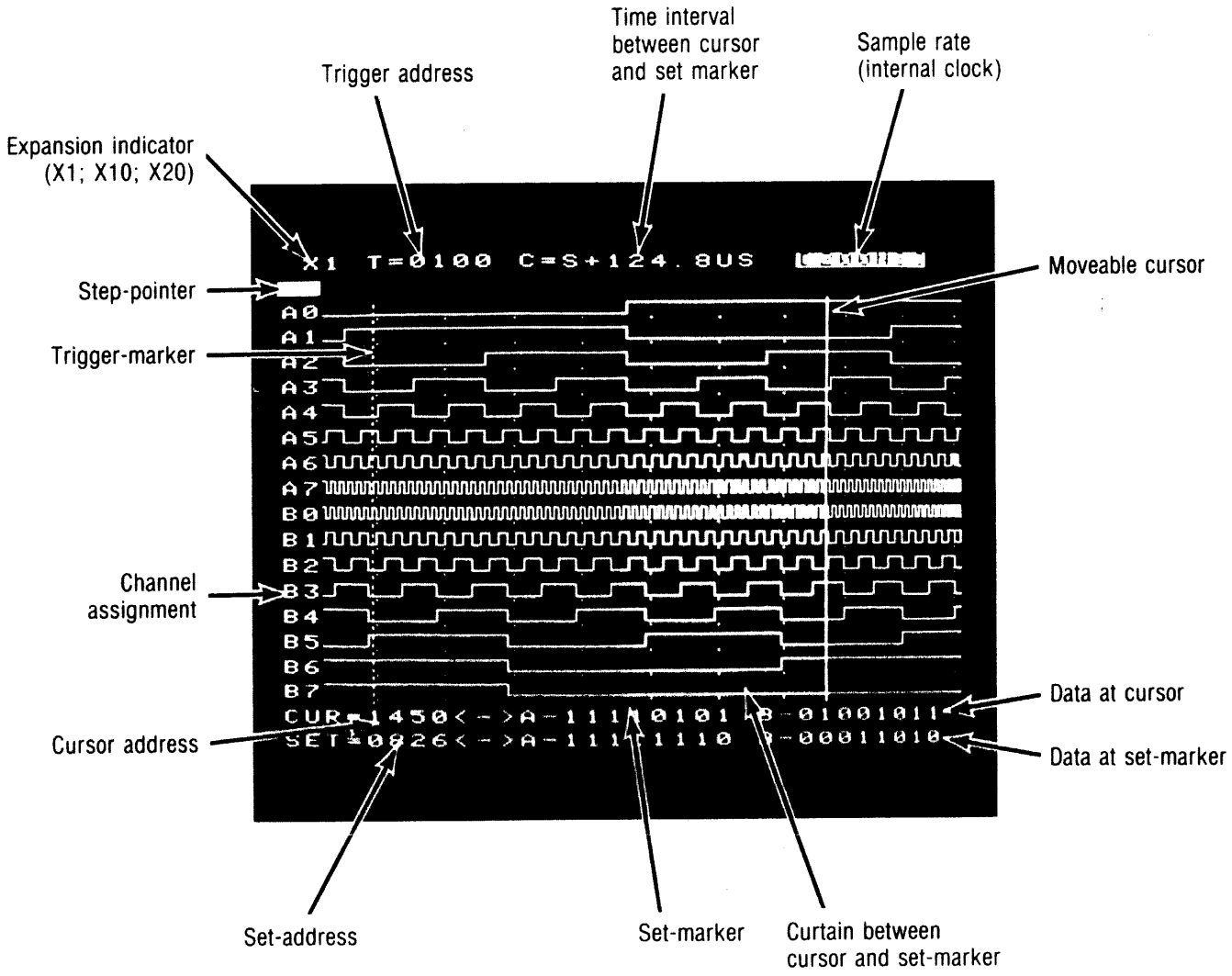

Figure 5-1

TIMING DIAGRAM (2)
With Rearranged and Deleted Channels

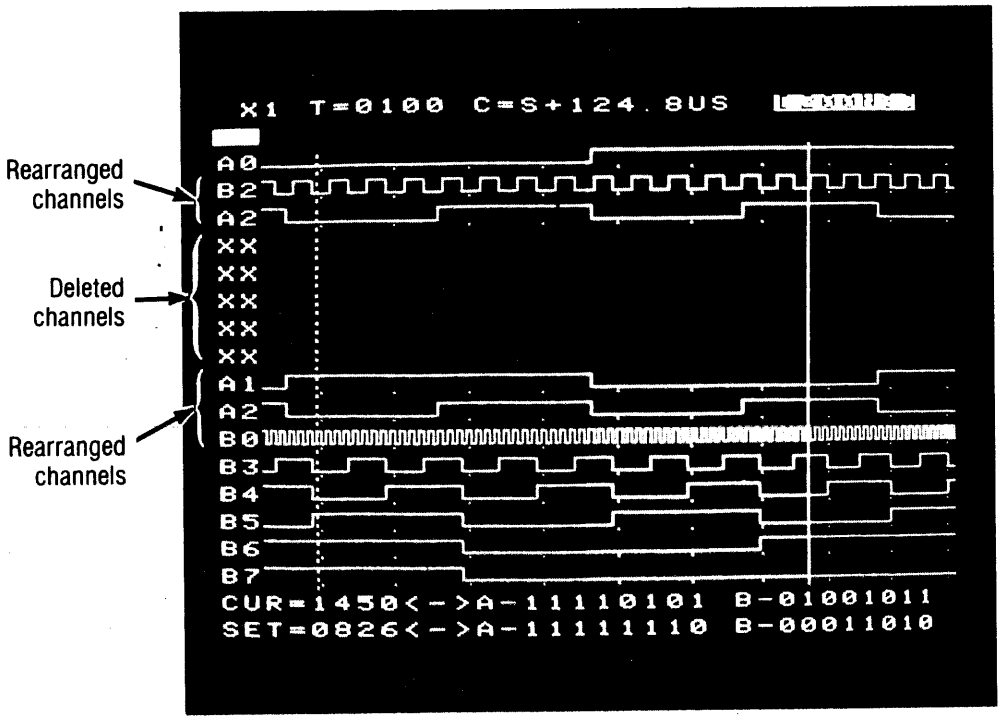

Figure 5-2

5.1.3 THE TRIGGER MARKER

A trigger marker will be displayed on the timing diagram at the point in the data stream where the trigger sequence and delay was completed during synchronous data measurements. The trigger marker is not available when the instrument's internal clock is selected for asynchronous operation.

NOTE

If sufficient post trigger word sequence delay is selected, it is possible to have the trigger marker located outside of the data window which is recorded and saved.

The trigger marker is a dotted vertical line which remains in a fixed location in relation to the data stream. Each trace sequence has a predetermined trigger address as follows:

Trace Sequence	Trigger Address - Hex (Dec)
1	063H (99)
2	1F3H (499)
3	382H (898)
4	064H (100)
5	76BH (1899)

It should be noted that stopping the recording process can be offset from the actual triggering of the instrument by setting an additional trigger delay under Label 5 of the trigger menu. This delay will be added to the fixed delay. The trigger can be located outside the recorded data window by using the delay counter, if desired. The trigger address is indicated at the top left of the display.

5.1.4 THE CURSOR

A movable "cursor" is provided with the timing diagram to simplify the measurement of timing differences and to "call-up" specific addresses. The cursor is a solid vertical line extending through all data lines. The cursor address is indicated in the lower left-hand corner of the display and is labeled CUR=. The cursor is followed by the binary coded data from channel A and B at the cursor address. The cursor can be controlled in one of two ways:

5.1.4.1 Step or sweep motion is achieved by pressing the - **CURSOR** - control keys [←] or [→] keys. Note that holding the - **CURSOR** - control key pressed will accelerate the cursor movement after four cursor steps.

5.1.4.2 The - **CURSOR** - [SPEC] key allows you to enter any address on the - **SPECIFY** - section of the keyboard. Any address from 001H to 800H (1 to 2048 decimal) can be specified. Pressing the - **SPECIFY** - [ENTER] key will cause the cursor to immediately move to the selected address.

5.1.5 THE CURSOR "SET" MARKER

The "set" marker is a location in the data stream which is used to retain a previous cursor address. Pressing the - **CURSOR** - [SET] key causes the cursor address to become the new "set" location. The "set" address is indicated in the lower left-hand corner of the screen, immediately below the cursor address, and is labeled, SET=. The set address is followed by the binary coded data from channel A and B at the set address. The relative displacement between the "set" and cursor locations is very useful for timing measurements. This displacement is indicated in terms of time in the upper middle of the display as C = S + 1346 u seconds. This makes it easy to measure time relations by holding any cursor position with the - **CURSOR** - [SET] key and moving the cursor in the data stream. A translucent "curtain" will be displayed between the cursor and the "set" point. This curtain shows the relationship between the cursor and set points at a glance.

5.1.6 ADDRESS BASE SELECTION

The address base of the trigger, cursor, and "set" point can be displayed in hexidemical or decimal notation by pressing either the - **SPECIFY** - [HEX] or [DEC] key.

5.2 THE LOGIC STATE LIST

A Logic State List is a powerful tool which allows address-by-address comparison to the user software program listing. The LAM 4850 provides a flexible Logic State list in which hexidecimal, octal, binary or ASCII coded data may be selected for display. Two optional codes are also available. After power-up, all channel displays will be listed in hexidecimal positive logic. The same is true when the list is brought to the default condition with the - **INITIAL** - [DEF'LT] key.

The Logic State List is available for all display formats, and for all input channels within the display format chosen. The Logic State List may be displayed by pressing the - **LIST** - [SPEC] key.

5.2.1 LIST PROGRAMMING

Listing all data as hexidecimal base positive data, may not be the most appropriate format for an application. For this reason, the LAM 4850 allows changing the data list to present the data in a form optimal to user needs. The limitation in doing this is the screen width of 32 characters. Rearranging the screen is accomplished by adding columns to the right side of the list. The result is that some columns will be deleted. As soon as the total width of 32 characters is exceeded, the column on the left will be dropped as the new one is added. List programming is accomplished in the following manner:

5.2.1.1 Press the - **LIST** - [SPEC] key.

5.2.1.2 Enter the following data in the - **SPECIFY** - section of the keyboard.

a) Input pod you wish to modify.

b) Polarity of data list:

(+) = Positive true logic

(-) = Negative true logic

c) Number base desired

d) If you want to blank a list, press the - **SPECIFY** - [OFF/X] key after specifying the input pod.

5.2.1.3 Press the ENTER key to execute the change.

It should be noted that the label of the column which will be lost as a result of the reprogramming will start to blink, after the new data has been specified and prior to pressing the - **SPECIFY** - [ENTER] key. If it is desired that the left-most column is not lost when entering a new column at the right, use the display pointer to step to a column which is to be deleted instead and press the - **SPECIFY** - [OFF/X] key. Deleting this column now creates space for the new data to be entered at the right. When the list has been reduced to 12 characters or less in width, thirty two lines of data will be displayed in two columns.

5.2.2 THE TRIGGER MARKER

A trigger marker is displayed on the Logic State List at the point in the data stream where the trigger sequence and delay was completed during synchronous data measurements. The trigger marker is not available when the instrument's internal clock is selected for asynchronous operation.

NOTE

If sufficient post trigger word sequence delay is selected, it is possible to have the trigger marker located outside of the data window which is recorded and saved.

The trigger marker is displayed as the word "TRIG" at the address in the data stream. This indicates the address location where the trigger becomes effective. Each Trace Sequence has a predetermined trigger address as follows:

Trace Sequence	Trigger Address - Hex (Dec)
1	063H (99)
2	1F3H (499)
3	382H (898)
4	064H (100)
5	76BH (1899)

It should be noted that stopping the recording process can be offset from the actual triggering of the instrument by setting an additional trigger delay under label 5 of the trigger menu. This delay will be added to the fixed delay, listed above. The trigger can be located outside the recorded data window by using this delay counter, if desired.

5.2.3 THE CURSOR

The logic state list will start at the address where the cursor is displayed in the timing diagram. Therefore the "cursor" address on the Logic State List is the address of the first line of data. Positioning the "cursor" will thus cause the list to move as opposed to the cursor moving through the data as in the timing diagram. The "cursor" can be controlled in one of three ways:

5.2.3.1 Step or sweep motion is achieved by pressing the - **CURSOR** - control keys [←] or [→] . Note that holding the - **CURSOR** - control key pressed will accelerate the cursor movement after four cursor steps.

5.2.3.2 The - **CURSOR** - [SPEC] key allows you to enter any address on the - **SPECIFY** - section of the keyboard. Any address within the 1 or 2K byte memory range can be specified. Pressing the - **SPECIFY** - [ENTER] key will cause the cursor to immediately move to the selected address.

5.2.3.3 The cursor can also be moved by use of the - **SEARCH** - keys. A search can be implemented by pressing the appropriate - **SEARCH** - key: [R=S] or [R≠S] . The direction of the search is then indicated by pressing the - **CURSOR** - [←] or [→] key. The first place in the data list which matches the specified search function, will appear as the first line of the data list. In case there is no match in the data list in the direction indicated, the message "SEARCH UNSUCCESSFUL" will appear flashing on the screen.

5.2.4 THE CURSOR "SET" MARKER

The "set" marker is a location in the data stream which is used to retain a previous cursor address. Pressing the - **CURSOR** - [SET] key, causes the cursor address to become the new "set" location. The "set" address is indicated in the upper middle portion of the screen and is labeled S=. The "set" address is indicated in the data list by a reversed video S immediately following the address.

The relationship between the "set" and cursor locations is indicted in the upper middle of the display as C=S + 1346 u seconds.

5.2.5 ADDRESS BASE SELECTION

The address base, of the data, trigger, cursor and "set" point can be displayed in the hexidecimal or decimal notation by pressing either the - **SPECIFY** - [HEX] or [DEC] key.

DATA LIST DISPLAY (1)

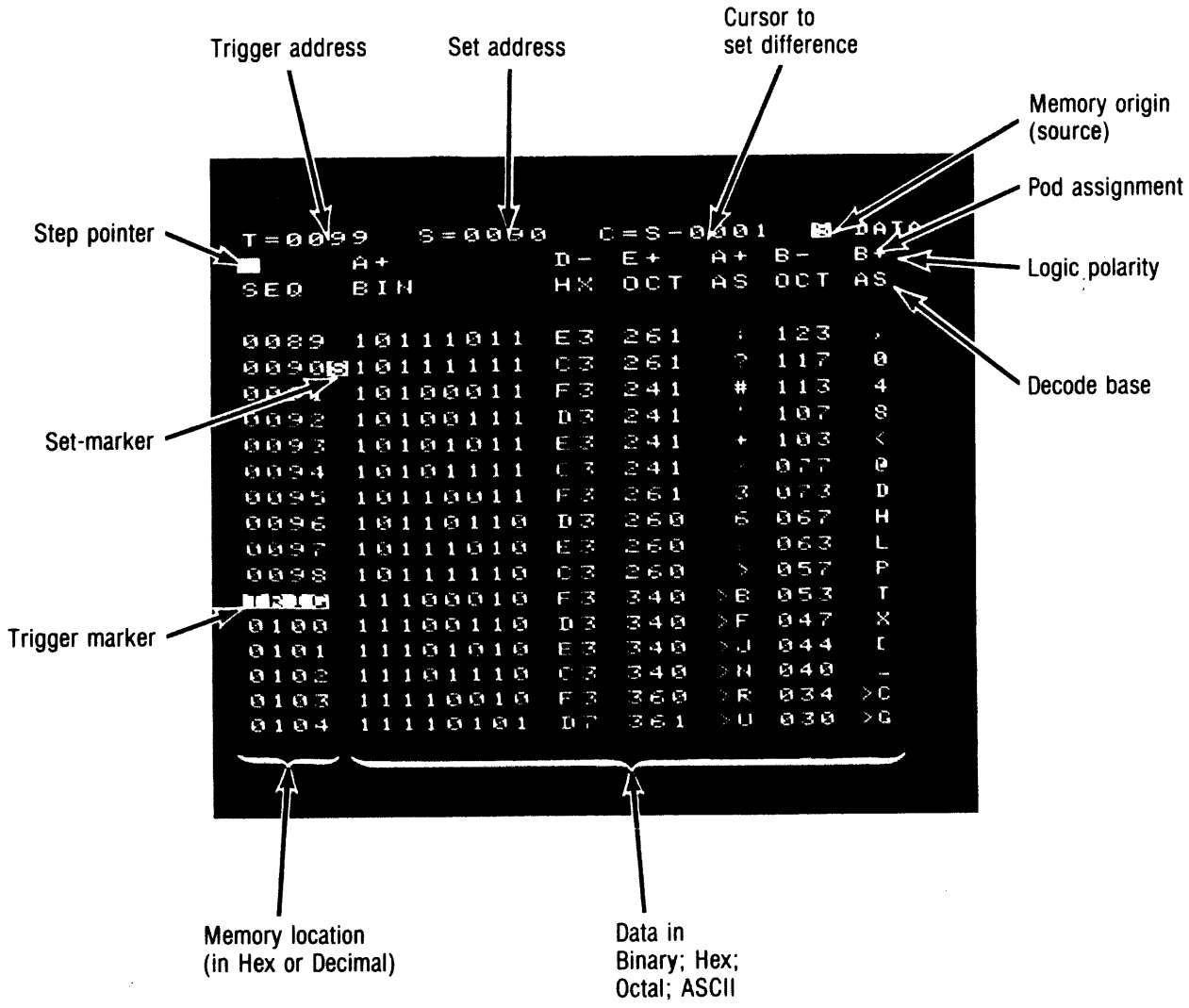

Figure 5-3

DATA LIST DISPLAY (2)
Reference Data Compared to Source Data

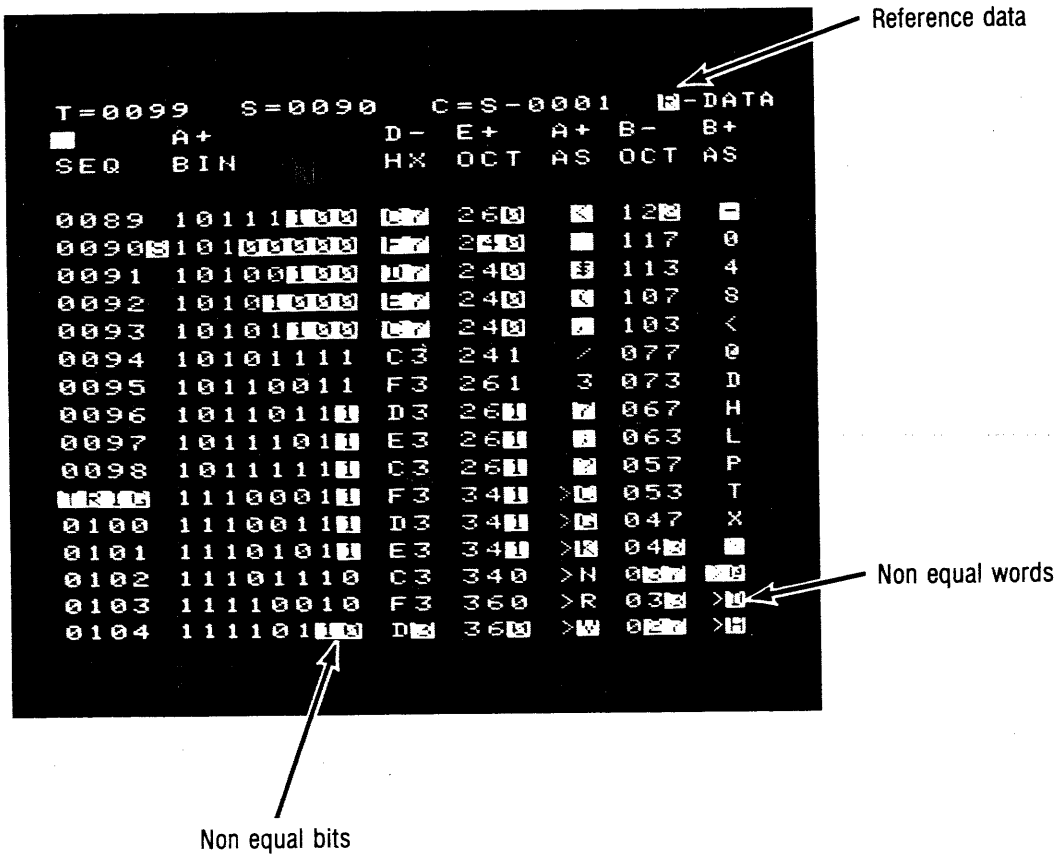

Figure 5-4

SECTION 6: SPECIAL APPLICATIONS

6.1 "GLITCH" CATCHING

When troubleshooting in the time domain, it may be helpful to use the Latch mode. Time domain measurements imply hardware problems. Thus, by capturing asynchronous glitches on the lines, you may be able to more effectively analylize the circuitry.

The Latch mode works as a detector of glitches that are narrow enough to fall between two consecutive sample clocks. The LAM 4850 is capable of capturing glitches as narrow as 5 ns, regardless of the clock period selected. The exact duration of the glitch is not recorded, but the time relationship between the glitch and other activity in the circuit is preserved. Most of the time this information is sufficient to help you debug your timing problems.

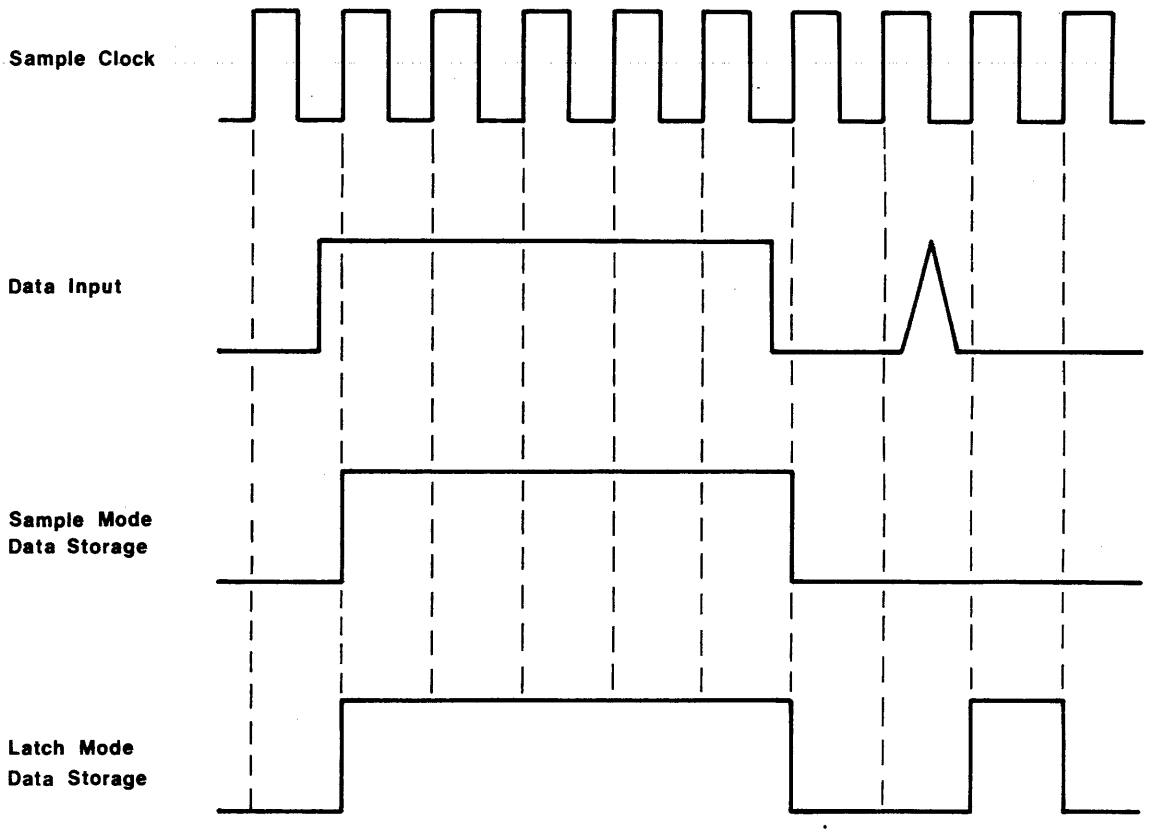

Figure 6-1

6.2 GROUND "NOISE" MEASUREMENTS

Ground "noise" can often be a factor in causing random triggering of a device. Ground "noise" is another type of "glitching", which can be measured using the latch mode in conjunction with the front panel THRESHOLD POT. The measurement can be made as follows:

6.2.1 Program label 1, trace menu for REP (repetitive starting).

6.2.2 Program the channel A or B INPUT in a LAT, latch mode of operation.

6.2.3 LEVEL in a POT mode of operation.

6.2.4 Display input as a timing diagram in the TMG X1 mode.

6.2.5 Start trace with TRACE START key.

6.2.6 Position front panel THRESHOLD POT at level where "glitches" are just detected.

6.2.7 Read the "noise" level from the pot vernier scale.

APPENDIX A

LAM 4850 RS 232 MACRO INSTRUCTIONS

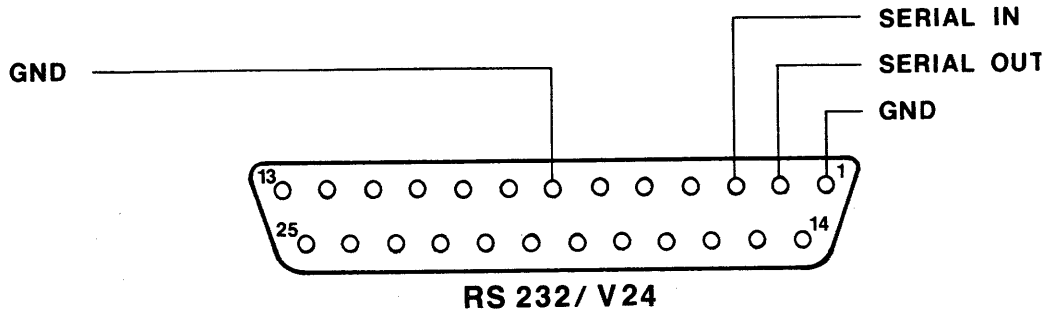

SECTION 1: GENERAL

The LAM 4850 will respond to the terminal with a period (.) and a blank whenever it is ready to receive a Macro Instruction.

A "?" is the response of entering a non-valid character or data. Entering of a valid Macro has to be followed by a carriage return in order to execute the instruction. Before starting, make sure the baud rate switch on the rear of the LAM 4850 is set to the required speed. (110 or 300 baud.)

SECTION 2: AVAILABLE MACRO'S

The following instructions are accepted by the LAM 4850.

2.1 S - SEQUENCE

Any individual source or reference memory location can be selected and dumped on the terminal. A sectional dumping is also established by using this Macro.

2.2 T - TABLE

Dumping a table or menu on the terminal which is identical to the information displayed on the screen.

2.3 C - SEQUENCE

Allows entering and/or changes of data in the reference memory.

2.4 . - TERMINATION

A period (.) is used to terminate a Macro instruction and must be used before a different Macro instruction can be inputted.

2.5 C/R - CARRIAGE RETURN

Executes the chosen Macro instruction or increments and executes in the S-sequence.

2.6 ∧ - BACK ARROW

Allows an S-sequence to decrement (step-back) to a previous line to be outputted (executes as well in this S-sequence).

2.7 INSTRUCTION FORMATS AND EXAMPLES

2.7.1 S (C/R) -Printing cursor memory location. New C/R increments cursor and prints next line. Back arrow will print previous line.

05DH 42 43 5C 5D

05EH 44 45 5E 5F

05FH 46 47 60 61

06OH 48 49 62 63 ∧

05FH 46 47 60 61 ∧

05EH 44 45 5E 5F ∧

05DH 42 43 5C 5D

05EH 44 45 5E 5F

2.7.2 S xxxx (C/R)

-Relocates cursor to memory location xxxx (in decimal) and prints that location. Leading zeros don't have to be entered. Memory location outside allowable range will be rejected.

Terminated by (.).

S 1789

6FDH 8E 8F

-As above, but based in Hex.

S H 56

056H 34 35 4E 4F

057H 36 37 50 51

058H 38 39 52 53 ^

057H 36 37 50 51

2.7.3 S xxxx,yyyy (C/R) or SH xxx,yyy (C/R)

Relocates cursor to memory location xxx and prints yyy lines. (Forwards)

Terminated by (.).

S 5, 7

005H 92 93 AC AD

006H 94 95 AE AF

007H 96 97 B0 B1

008H 98 99 B2 B3

009H 9A 9B B4 B5

00AH 9C 9D B6 B7

00BH 9E 9F B8 B9

2.7.4 C (CR)

Note: before giving C Macro make sure LAM 4850 is in Data list mode of Reference Memory. LAM 4850 will repond with:

```
. C
ENTER STARTING ADDRESS
```

2.7.5 xxx (C/R)

Entered start address (Hex only!)
LAM 4850 will respond with:

```
3C
SPECIFY PODS
```

2.7.6 A.B.C.D.E.F (C/R)

Entered pods whereby data has to be inputted or changed.

LAM 4850 will respond with the data in the specified memory location for the first of the specified pods.

Change data by inputting 2 Hex characters and:

2.7.6.1 (C/R)

if only one pod has to be loaded or changed

```
A
003C   A=1 A .
```

or:

2.7.6.2 ,

LAM 4850 will respond with data at specified memory location for the next specified pod.

```
F, B,
0036        F=3D EE,   B=5B   00
```

2.7.6.3 (C/R)

At end of specified memory location will execute loading (changing) and go to the next memory location.

```
0037        F=3F .
```

Terminate C-sequence with (.).

2.7.6.4 Only pods available at screen can be changed or inputted.

2.7.6.5 Pods that need no change do not have to be entered under SPECIFY PODS:

2.7.6.6 When inputting data in a certain pod position, data can be overwritten, that means it doesn't matter how many hex characters have been entered, only the last two characters will be executed.

2.7.7 T (C/R) Prints all information as available on the screen. Printing cannot be interrupted during the printout of the whole screen page.

No termination is needed.

APPENDIX A REVISED FOR LAM 4850 WITH LEVEL 3A SOFTWARE

EXTENDED SERIAL INTERFACE

1. GENERAL

1.1 INTRODUCTION

The serial interface provides the simplest and most universal communication between the LAM 4850 and a wide range of computers and peripherals. The interface voltages and pinouts are as laid down in IEC NORM V24/V28 (US RS232C) which provides an interface standard between a wide variety of terminals, peripherals, modems and computers.

The LAM 4850 may be controlled by a computer or calculator as an element of an automatic test system or by a simple serial terminal (half duplex mode) to provide hard-copy of test results for documentation purposes.

1.2 INTERFACE STANDARD

The connector pinout is as follows:

PIN	SIGNAL	
7	SYSTEM GND	) INTERNALLY LINKED
1	SIGNAL GND	
2	TX DATA OUT	
3	RX DATA IN	

DATA	RATE	110 or 300 band switch selectable
START	BITS	1
STOP	BITS	2
DATA	BITS	8 (incl. parity)
PARITY	SENT	- ALWAYS RESET
"	RECEIVED	- IGNORED
LOGIC	'1'	-3 TO -12V
	'0'	+3 TO +12V

No modem control signals are available.

MODE - half duplex with echo of received characters.

2. PROGRAMMING RULES

2.1 VALID ALPHANUMERIC CHARACTERS

A, B, C, D, E, F, G, H, I, J, K, L, M, N, O, P, Q, R, S, T, U, V, W, X, Y, Z, ∅, 1, 2, 3, 4, 5, 6, 7, 8, 9 (all letters upper case).

2.2 VALID SPECIAL CHARACTERS

%, *, comma, ?, #, &, \, space, return and ^,

2.3

A program statement consists of maximum 500 alphanumeric characters followed by a comma, ?, or carriage return character. The characters comma, ?, or return cause execution of a command string.

All parameter specifications must be separated by one or more spaces (SP) or carriage returns (CR).

The character Line Feed (LF) is ignored by the LAM 4850.

2.4

% Halt recording - emulates pushing the stop button.

, Execute the command buffer , however additional programming, including commas, may be sent as long as the 500 character buffer is not caused to overflow.

? Execute the command buffer (and start Logic Analyzer if followed return)

. Stop transmitting (immediate character)

\ The backlash causes the deletion of the preceding character. Multiple backslashes may be used.

^ step cursor back one position and transmit (in MPL mode)

When executing illegal characters, the LAM 4850 will respond with a ? followed by a CRLF and a . (period), after this is ready for receiving the next command.

2.5 PROGRAMMING MODE SELECTION

MT	(Parameters)	Trigger Menu
MR	"	Trace
MC	"	Compare
MD	"	Timing Diagram
ML	"	Data List
MP	"	Printout Control

The letter M followed by a memory selection character will cause the LAM 4850 to enter a menu programming mode.

2.6 COMMANDS

Commands are two or more characters separated from other commands and command sequences by space (SP) delimiters. Certain commands require amplification and/or modification. These sequences follow the command and are separated from the command and each other by the space (SP) delimiter.

#0 Display Update off - holds the LAM 4850 display with its current contents until the monitor update on command is received.

#1 Display Update on - causes the LAM 4850 to resume display update. Immediately updates to current status when this command is received.

&R Reference Data
&S Source Data
] to be programmed before executing Transmission menu.

&T Source Data ⟶ Reference memory transfer

&H Hexidecimal Addressing
&D Decimal Addressing
] concerns all addressing in all menus.

2.6.1 Display Update ON/OFF Command

#(N)

N = 0 OFF

N = 1 ON

Used to enable or disable the LAM 4850 display update.

2.6.2 Data/Address Command

&(A)

A = R Reference Data

A = S Source Data

Used to indicate whether the LAM 4850 is to send data from the source or reference memory.

A = T Transfer the source memory data to the reference memory. Emulates pressing the S⟶ R key.

A = H Hex addressing for menu and list programming.

A = D Decimal addressing for menu and list programming.

2.6.4 Program Trace Menu Command (MR)

A trace menu command is indicated by an (MR) followed by a sequence of character groups separated by single space character which modify certain parameters in the trace menu. The trace menu command is executed by sending one of the execute control characters following the last character in the command sequence. If additional trace menu programming is desired before another command type is initiated the (MR) need not be repeated. Any field left unprogrammed by omitting it from the sequence will result in previously stored or default data left in that field.

2.6.4.1 Analyzer Sequence Field S(N) [Label 0]

N = 1 Sequence one

N = 2 Sequence two

N = 3 Sequence three

N = 4 Sequence four

N = 5 Sequence five

2.6.4.2 Go Field G(N) (Label 1)

N = 1 Manual

N = 2 Free Run

2.6.4.3 Pod ON/OFF O(P) (L) (Label 2)

P = A Pods A and B

P = C Pods C and D

P = E Pods E and F

L = N ON

L = F OFF

2.6.4.4 Pod Fields P (L) (Labels 3, 4, 5 & 6) designates the pod for 2.6.4.4.1, Level Field; 2.6.4.4.2, Input Field; 2.6.4.4.3, Clock Field; and 2.6.4.4.4, Frequency Field.

L = A A and B Pods

L = C C and D Pods

L = E E and F Pods

L = Q Clock and Qualifier Pod (Level Field only)

2.6.4.4.1 Level Fields L (A) (Labels 3, 4, 5, & 6) used in conjunction with, and must follow, a pod field sequence. Order independent from the input, clock and sample rate fields.

A = T TTL 1.4 volts

A = 1 V1 Field level see sec 2.6.4.7.

A = 2 V2 Field level see sec 2.6.4.7.

A = P Level as set by the front panel pot.

2.6.4.4.2 Input fields I(L) (Label 3)

Used in conjunction with, and must follow, a pod field sequence. Order independent from the level, clock, and sample rate fields.

L = S Sample Mode

L = L Latch Mode

2.6.4.4.3 Clock field C(A). (Labels 3, 4, and 5)

Used in conjunction with, and must follow, a pod field sequence. Order independent from the level, input, and sample rate fields.

A = I Internal

A = 1 External Clock 1

A = 2 External Clock 2

A = 3 External Clock 3

2.6.4.4.4 Sample rate field F(N). (Labels 3, 4, and 5)

Used in conjunction with, and must follow, a pod field sequence. Order independent from the level, input, and clock fields.

N = O	20 nanoseconds
= 1	50 nanoseconds
= 2	100 nanoseconds
= 3	200 nanoseconds
= 4	500 nanoseconds
= 5	1 microsecond
= 6	2 microsecond
= 7	5 microsecond
= 8	10 microsecond
= 9	20 microsecond
=10	50 microsecond
=11	100 microsecond
=12	200 microsecond
=13	500 microsecond
=14	1 millisecond
=15	2 millisecond
=16	5 millisecond
=17	10 millisecond
=18	20 millisecond
=19	50 millisecond
=20	100 millisecond
=21	200 millisecond
=22	500 millisecond

2.6.4.5 Qualifier fields Q(N)(S) (Label 7)

N = 1	Qualifier 1 Field
N = 2	Qualifier 2 Field
N = 3	Qualifier 3 Field
S = +	High Active
S = -	Low Active
S = x	Inactive (no qualifier gating)

2.6.4.6 Clock Edge Fields E(N)(S) (Label 8)

N = 1	Clock 1
N = 2	Clock 2
N = 3	Clock 3
S = +	Rising Edge
S = -	Falling Edge

NOTE

If attempt to program this field is made with internal clock selected in all three clock fields (Sec. 2.6.4.4.3) an error condition will result.

2.6.4.7 Threshold Fields T (N1)(S)(N2) (Label 9)

N1 = 1	V1 Field
N1 = 2	V2 Field
S = +	Positive Voltage
S = -	Negative Voltage
N2 =	0 to 99 for 0 to 9.9 volts in 0.1 volt increments

NOTE

Before programming a threshold field a pod command must be given. See Sec. 2.6.4.4.

2.6.4.8 Trace menu programming example.

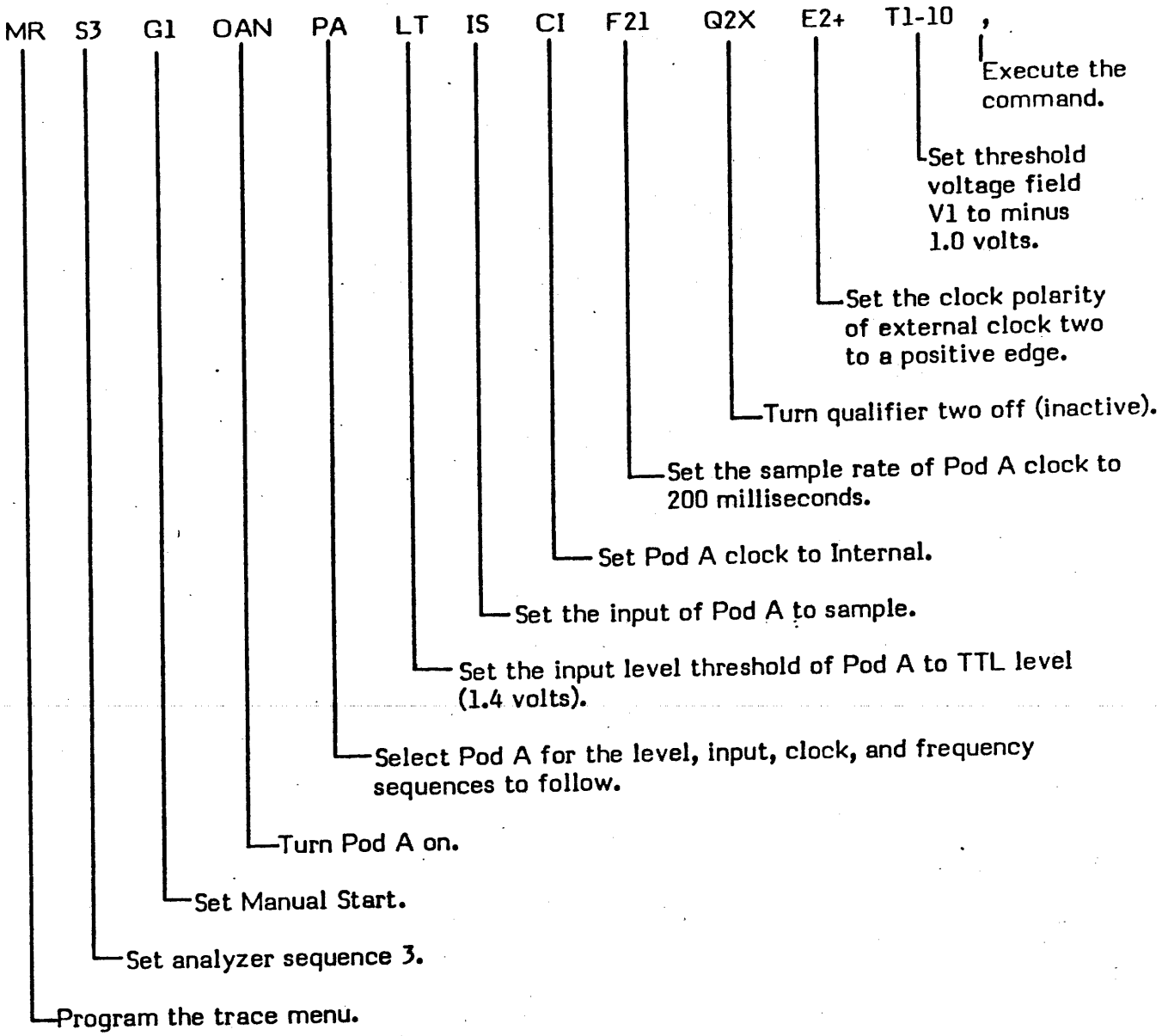

2.6.5 Program Trigger Menu Command (MT)

A program trigger menu command is indicated by an (MT) followed by a sequence of character groups separated by single space characters which modify certain parameters in the trigger menu. The trigger command is executed by sending one of the execute control characters following the last character in the command sequence. If additional trigger menu programming is desired before another command type is initiated the (MT) need not be repeated. Any field left unprogrammed by omitting it from the sequence will result in previously programmed or default data left in that field.

2.6.5.1 Level Select L(N) Corresponds to the First Four Levels in the Trigger Menu.

N = 1	Level 1
N = 2	Level 2
N = 3	Level 3
N = 4	Level 4

Sets the level for the following function, event count, and POD trigger word sequences.

2.6.5.1.1 Function F(N) (Field 8)

Order independent from the event count and POD trigger word sequences but must follow level select sequence.

N = 0	Start (Level 1 only)
N = 1	Free Run (Level 1)
	OFF (Level 2 thru 4)
N = 2	Then
N = 3	Then not
N = 4	Restart (Level 4 only)

2.6.5.1.2 Event Count E(N) (Field 9)

Order independent from the function and POD trigger word select sequences but must follow a level select sequence.

N = 1 to 255	For 1 to 255 event counts before moving to the next trigger level, trigger delay or trigger.

2.6.5.1.3 POD Trigger Word P(L)(NNNNNNNN) (Fields A thru F)

N = 0	Binary Zero
N = 1	Binary One
N = X	Don't Care

Order independent from the function and event count sequences but must follow a level select sequence.

NOTE

POD trigger words can be remotely programmed in positive binary only.

2.6.5.2 Clock Select C(A) (Level 5)

L = A thru F for PODS A thru F

A = I Internal

A = 1 External Clock 1

A = 2 External Clock 2

A = 3 External Clock 3

NOTE

External clocks must be selected in trace menu levels 3, 4, or 5 in order to be programmed successfully in this field.

2.6.5.3 Delay Select D(N) Level 5

N = 0 thru 4095 for delay counts 0 thru 4095

2.6.5.4 Trigger Menu Programming Example

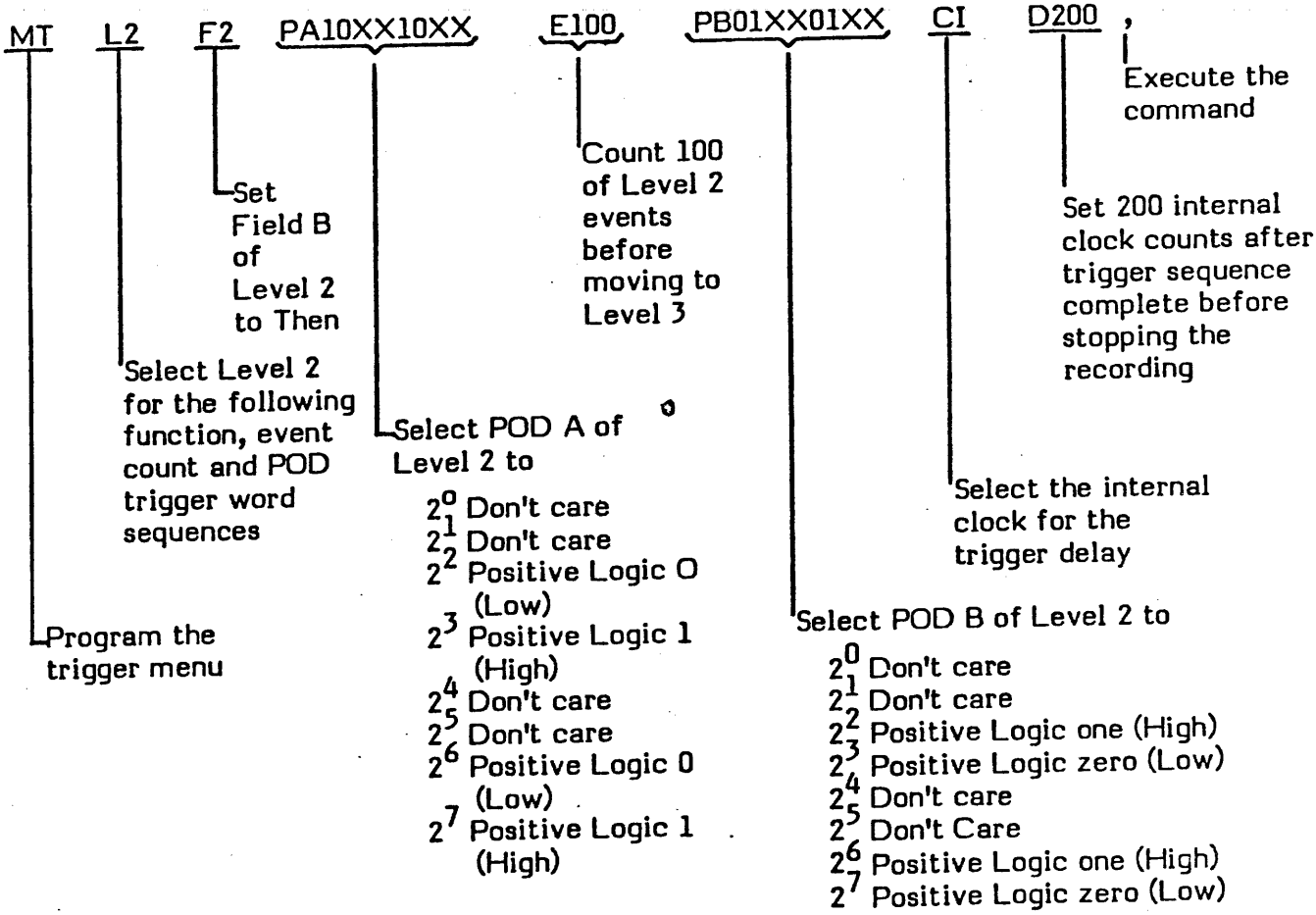

2.6.6 Program Compare Menu Command

A program compare menu command is initiated by an (MC) followed by a sequence of character groups separated by space characters which modify certain parameters in the compare menu. The compare menu program command is set into execution by sending one of the execute control characters following the last character in the command sequence. If additional compare menu programming is desired before another command type is initiated the (MC) need not be repeated. Any field left unprogrammed by omitting it from the sequence will result in previously programmed or default data left in that field.

2.6.6.1 Section Select B(N).

Selects the section of the compare menu for the following sequence of program sequences.

B = 1 Section 1

B = 2 Section 2

2.6.6.1.1 Location Count L(N)

Selects the number of locations in the source and reference menus to be compared.

N = A range of values from 0 to 999 or 0 to 1999 depending on the configuration selected in label two of the trace menu.

2.6.6.1.2 Source Start Address S(N)

Selects the starting address in the source menu.

N = A range of values from 0 to 999 or 0 to 1999 depending on the configuration selected in Label two of the trace menu.

2.6.6.1.3 Reference start address R(N)

Selects the starting address in the reference menu.

N = A range of value from 0 to 999 or 0 to 1999 depending on the configuration selected in Label two of the trace menu.

2.6.6.1.4 Pod Select P(L1)

Selects the POD data which is to be used in the compare process.

L1 = A thru F for data from PODS A thru F

Pod s which are not to be used in the compare process are omitted from the sequence and the remainder of the field is left justified.

2.6.6.1.5 Skew Select K(N)

Selects range of skew, plus and minus, over which the selected data will be compared.

N = 0 to 9 for ranges of 0 to plus and minus 9.

2.6.6.2 Function Select F(N)

Selects the functions for Level C of the compare menu.

N = 0	Halt on R = S
N = 1	Halt on R< >S (not equal)
N = 2	Count on R = S
N = 3	Count on R<=>S (not equal)

2.6.6.3 Compare Menu Programming Example

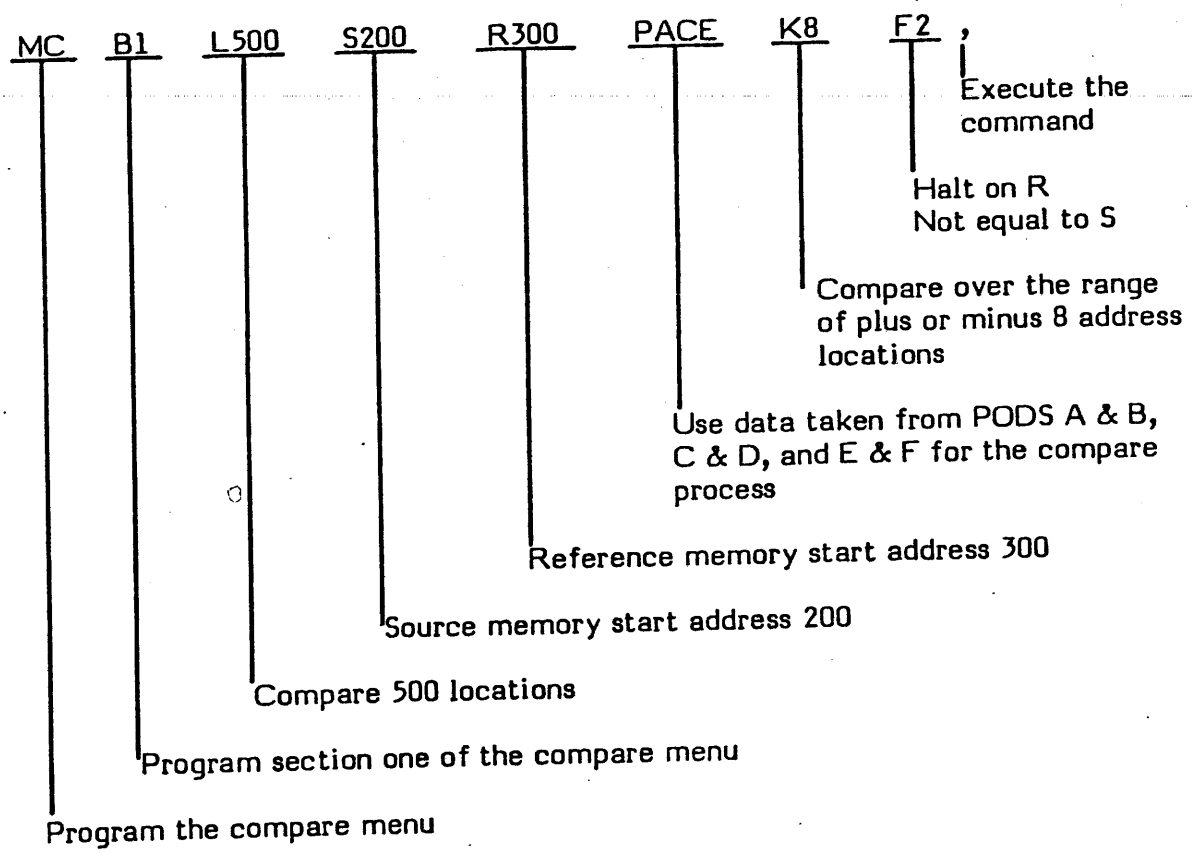

2.6.7 Program Timing Diagram Command

A program timing diagram command is initiated by an (MD) followed by a sequence of character groups separated by single space characters which modify certain parameters in the timing diagram. The command is set into execution by sending one of the execute control characters following the last character in the command sequence. If additional timing diagram programming is desired before another command type is initiated the (MD) need not be repeated. Any field left unprogrammed by omitting it from the sequence will result in previously programmed or default data left in that field.

2.6.7.1 Scale Select X(N)

Selects the time scale of data selected on the display.

N = 1	X1	Times one
N = 2	X10	Times ten
N = 3	X20	Times twenty

2.6.7.2 Channel Display and Position Command C(N1)(N2)

Selects the position in the display for each channel.

N1 N = O thru F hex for the sixteen channel locations in the timing diagram. O is the top most and F the bottom most.

N2 Channel to be displayed at the N1 position. A0 thru A7 and B0 thru B7.

2.6.7.3 Channel OFF command C(N)O

Turns the (N) channel off and leaves the location blank. A channel may be turned back on using the channel display and position command, i.e., C1A1 would display channel A1 in its default location, the second line in the timing diagram.

N = O thru F hex for the sixteen channel locations in the timing diagram.

2.6.7.4 Timing Diagram Programming Example

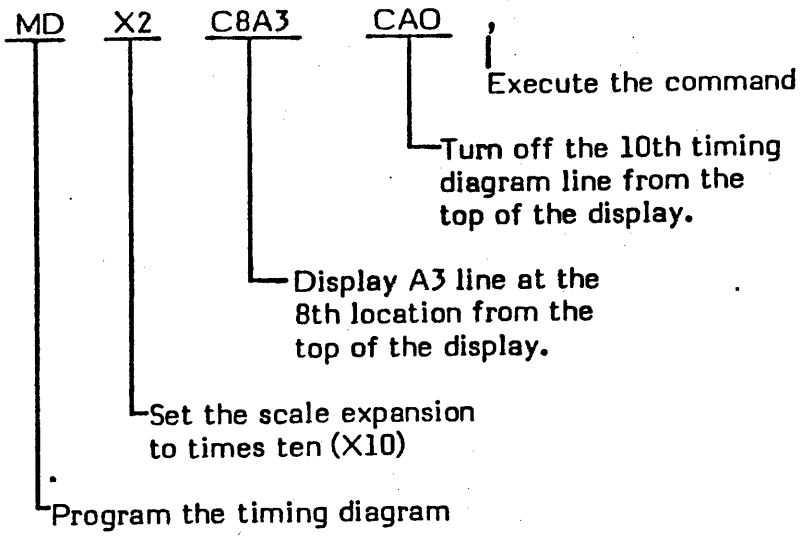

2.6.8 Program List Display Command

A program list menu command is initiated by an (ML) followed by a sequence of character groups separated by single space characters which modify certain parameters in the list display. The command is set into execution by sending one of the execute control characters following the last character in the command sequence. If additional list menu programming is desired before another command type is initiated the ML need not be repeated. Any parameter left unprogrammed by omitting it from the sequence will result in previously programmed or default data left in that field.

2.6.8.1 POD select command P (L1)(S)(L2).

Selects data from a selected POD and its format to be added to the list display.

L1	=	A thru F for data from PODS A thru F
S		+ = Positive true data display
		- = Negative true data display
L2		A = ASCII data display
		B = Binary data display
		H = Hexidecimal data display
		O = Octal data display

2.6.8.2 POD Off Command P(L)O

Removes the data corresponding to the L POD from the display.

L	=	A thru F for PODS A thru F

2.6.8.3 List Display Program Example

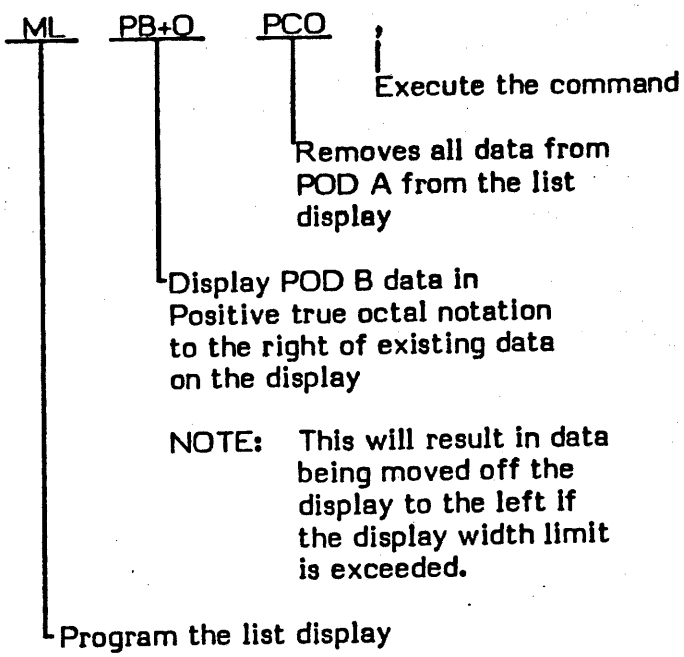

3. DATA PRINTOUT

Data printout is controlled by (MP) followed by a sequence of character groups separated by single space characters which cause selection of the data to print out.

NOTE

By printout the LAM 3250 issues (CR) (LF) sequence to terminate a line.

3.1 L - COMMAND

The single character (L) causes printout of a line of data at the current cursor position.

The next CR will print the data at the new cursor position.
A ^ will print the data at the previous cursor position.

A modified form of this command is described in 3.7.4.

3 .2 PRINT SCREEN

The print screen command enables the printing of the monitor contents. It has the folowing format:

MP T (X) , where:

(X) = R = Trace Format

T = Trigger Specification

C = Compare Menu

L = Data List

3 .3 PRINT TIMING DIAGRAM

The print timing diagram command causes printout on a hardcopy device of a section of the timing diagram. It has the format:

MP D (N1 N2 N3 N4) S X1 EX2 ,

where: N1 is the input channel group to be printed.

N1 = A thru F for PODS A thru F

N2 is the input channel (0-7)

N3 is R for Source Data

S for Reference Data

N4 is either X for marking of Source to Reference differences or a space character.

S is a start address given in X1 as 4 decimal digits

E is an end address given in X2 as 4 decimal digits

EXAMPLE

MP D A3SX S 10 E100 ,

= Print a timing diagram for channel A3, Source Data marking differences to the reference data.

3 .4 MODIFIED L - COMMAND

This command has the format:

MP L PN1N2N3 SX1 EX2

where N1 is an input channel A, B, C or D

N2 is + for +ve logic

- for -ve logic

0 for disabled

N3 is A for ASCII

B for BINARY

0 for OCTAL

H for HEXADECIMAL

S is a start address given in X1

E is an end address given in X2

X1 and X2 in 3 digit Hex. or 4 digit decimal depending on previous selected addressing mode. (see sec. 2.6)

This command may be used for printing specified channel(s) in data list format with selected decodings and address range.

NOTE

The L command allows printing over a larger area (maximum 58 characters wide) as available on the LAM 4850 screen.

3.5 THE CHANGE COMMAND - C

This command may be used to change the analyzers' data content. (Remote printout format). It has the format:

MP C

The analyzer prompts with a list of active pod data at the current cursor address. To change data type

P = DD

where P is a Pod (A, B, C, D, E, or F)

DD is new data for the pod in hexadecimal base. Other data at the same address but from other pods may be changed by using the "space" char. after specifying DD and typing again P=DD.

GENERAL PURPOSE INTERFACE BUS.

APPENDIX "B" TO
LAM 4850 MANUAL

APPENDIX B

GENERAL PURPOSE INTERFACE B U S

SECTION 1: GENERAL

1.1 INTRODUCTION

The GPIB is accepted as the industry standard for programmable instrumentation. By complying with the IEEE 488-1978 standard (revised from 1975), instrument and controller manufacturers are now able to offer the broadest spectrum of programmables ever available. This gives the user the opportunity to optimize his own system by selecting instruments from a variety of manufacturers and be assured that they will all operate well together after a simple hookup.

The GPIB requires no external custom-designed interfaces between instruments. It uses relatively few program lines and is simple enough to implement that a microcomputer or programmable calculator is sufficient as system controller. The system approach to instrumentation has many benefits: operator fatique is not a factor, so results are consistent, and automated systems are faster, more repeatable and more accurate than error prone manual testing.

Several different types of instruments may be working as a system on the GPIB. The controller is a computer or calculator capable of controlling all bus activity. It contains the program, or driver, which defines the system's function and is the source of data for all setups of instruments with listener capability. It also receives or directs to listeners the data generated by devices with talker capability.

Among its bus management duties, the controller directs (addresses) talkers to transmit data and listeners to receive data. Generally, talkers receive real inputs (voltage, frequency, magnetic tape) and transmit data. Listeners generally receive data (parameter settings) and output control information to the test system.

1.2 GENERAL INFORMATION

The Option LAM 4850-01 GPIB Interface allows the user to control most functions of the LAM 4850 Logic Analyzer remotely from the IEEE 488 instrumentation bus. Furthermore, it enables the transfer of data recordings to other GPIB compatible devices. The electrical interface uses standard IEEE 488 open collector drivers with passive terminations.

All data transfers occur in standard US ASCII coded characters (7 bit, i.e., parity always reset). The interface supports two modes of operation:

1) talk only mode for the transfer of data to a non-addressed device such as a listen only printer.

2) talk/listen (addressed) mode for the control of the instrument in a test system environment with separate controller.

These two modes of operation are selected by a rear panel switch. In addressed mode operation the instrument responds to a selected primary address (selected by rear panel switches) in the range 0-31 decimal. Addresses 0-30 may be used as the talk/listen address (mta, mla) of the instrument address 31 is used by the bus controller to deaddress (unt, unl) the instrument, thus it may not be used as a talk/listen address. Secondary addressing is not used by the LAM 4850.

Programming of the instrument is accomplished by selecting various 'menus' or programmable function groups by the character 'M' followed by the letter T, R, C, L, D, or X to select trigger, trace, compare, list, timing diagram or transmit menus.

The trigger menu (MT) is used to set up the trigger conditions for a data recording including trigger clock source and post trigger delay.

By means of the trace menu (MR) the input memory blocks contained in the LAM 4850 may be configured in one of five ways in order to create a 16 channel 50 MHZ timing or state analyzer plus a 16 channel 25 MHZ state analyzer, or a 48 channel 25 MHZ state analyzer. Trigger delays for capture of post/pre-trigger data, clock selection qualifiers, the internal timebase, and logic thresholds are also controlled by use of this menu.

The compare menu (MC) allows configuring the LAM 4850 for the compare mode of operation. This mode enables the LAM 4850 to compare data stored in the reference memory to that stored in the source memory over selected not necessarily corresponding areas. Results of the compare scan are indicated on the display. Please note that attempts to program the compare menu without previously recording data will result in programming errors. This helps prevent comparing erroneous data.

The integrated display of the LAM 4850 may be controlled by use of the list and timing menu. This allows a user to control display format from the GPIB bus and use the built in display for evaluation of results.

The transmit menu allows the user to select recorded data to be transferred over the GPIB bus. A system controller can select data channels and address ranges to be transferred after a data recording.

SECTION 2: PROGRAMMING

2.1 HARDWARE SETUP

G.P.I.B. interface connector and address selective switches located on the rear panel of the LAM 4850.

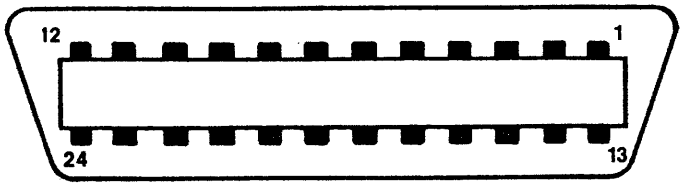

IEC-BUS

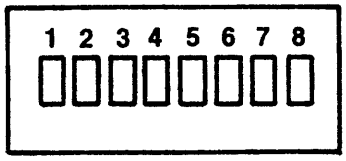

The connector is complete defined in the ANSI/IEEE STD 488-1978.

2.2 ADDRESSING

An eight pole address switch is located below the standard GPIB connector. This switch controls the talk and listen address of the LAM 4850. It is labeled one through eight. The ON position specifies a one in the binary bit weight position as shown in the table following.

S 1	value 2^0
S 2	" 2^1
S 3	" 2^2
S 4	" 2^3
S 5	" 2^4
S 6	reserved for future use
S 7	reserved for future use
S 8	reserved for future use

Please note from the following table that the above switch settings actually select an address pair, one for talk and one for listen. For instance, if 16 decimal (0010000 Binary) were selected the controller would send an ASCII Zero (48 decimal, 0110000 Binary) for a LAM 4850 listen address command and an ASCII "P" (80 decimal, 1010000 Binary) for a LAM 4850 talk address. Also, address 31 decimal may not be used because this address pair is reserved for untalk and unlisten control.

Table 2.1: ADDRESS CODING

(SENT AND RECEIVED WITH ATN=1)

Bits ② b_7 b_6 b_5					000	MSG ①	001	MSG	010	MSG	011	MSG	100	MSG	101	MSG	110	MSG	111	MSG
b_4	b_3	b_2	b_1	COLUMN / ROW	0		1		2		3		4		5		6		7	
0	0	0	0	0	NUL		DLE		SP	MLA ASSIGNED TO DEVICE	0	MLA ASSIGNED TO DEVICE	@	MTA ASSIGNED TO DEVICE	P	MTA ASSIGNED TO DEVICE		MEANING DEFINED BY PCG CODE	p	MEANING DEFINED BY PCG CODE
0	0	0	1	1	SOH	GTL	DC1	LLO	!		1		A		Q		a		q	
0	0	1	0	2	STX		DC2				2		B		R		b		r	
0	0	1	1	3	ETX		DC3		#		3		C		S		c		s	
0	1	0	0	4	EOT	SDC	DC4	DCL	$		4		D		T		d		t	
0	1	0	1	5	ENQ	PPC ③	NAK	PPU	%		5		E		U		e		u	
0	1	1	0	6	ACK		SYN		&		6		F		V		f		v	
0	1	1	1	7	BEL		ETB				7		G		W		g		w	
1	0	0	0	8	BS	GET	CAN	SPE	(		8		H		X		h		x	
1	0	0	1	9	HT	TCT	EM	SPD	)		9		I		Y		i		y	
1	0	1	0	10	LF		SUB		*		:		J		Z		j		z	
1	0	1	1	11	VT		ESC		+		;		K		[		k		{	
1	1	0	0	12	FF		FS		,		<		L		\		l		¦	
1	1	0	1	13	CR		GS		–		=		M		]		m		}	
1	1	1	0	14	SO		RS		.		>		N		^		n		~	
1	1	1	1	15	SI		US		/		?	UNL	O		—	UNT	o		DEL	

ADDRESSED COMMAND GROUP (ACG)

UNIVERSAL COMMAND GROUP (UCG)

④ LISTEN ADDRESS GROUP (LAG)

TALK ADDRESS GROUP (TAG)

PRIMARY COMMAND GROUP (PCG)

SECONDARY COMMAND GROUP (SCG)

NOTES: ① MSG = INTERFACE MESSAGE

② b_1 = DIO1...b_7 = DIO7

③ REQUIRES SECONDARY COMMAND

④ DENSE SUBSET (COLUMN 2 THROUGH 5)

2.3 PROGRAMMING RULES

2.3.1 Valid Alphanumeric characters: A, B, C, D, E, F, G, H, I, J, K, L, M, N, O, P, Q, R, S, T, U, V, W, X, Y, Z, 0, 1, 2, 3, 4, 5, 6, 7, 8, 9, (all letters upper case).

2.3.2 Valid control characters *, %, $, comma, ?, @, #, &, !.

2.3.3 A program statement consists of maximum 500 Alphanumeric characters followed by a comma, ?, or @. The control characters comma, ?, @, cause execution of a command string.

2.3.4 The character Line Feed (LF) is ignored by the LAM 4850.

2.3.5 The character Carriage Return (CR) is treated by the LAM 4850 as a Space (SP).

2.3.6 All parameter specifications must be separated by one or more spaces (SP) or carriage returns (CR).

2.3.7 Following selection of a programming group by M(X), where X is a menu specification. The LAM 4850 remains in the selected mode until a further menu specification M(X) is received.

2.3.8 The character $ causes deletion of a not yet executed command string.

2.3.9 The control characters #, &, ! are always effective (menu independent).

2.3.10 The LAM 4850 contains a 500 character buffer into which GPIB instructions are loaded pending execution. This buffer length is sufficient to load all required instructions pertaining to a data recording.

2.3.11 If a read data command is received by the LAM 4850 before a data recording is made; character 'N' (no data) will be returned.

2.3.12 When a read command is initiated while the LAM 4850 is busy, or there is an error condition, the character Y (N) or X (N) respectively will be returned when reading the data register in which (N) is the busyr or error code.

2.3.13 When programming a machine from a cold start a transmission format command (!1, !2, !3, or !4), addressing mode command (&H or &D) and memory select command (&S or &R) must be sent before the transmission menu command (MX) is sent. It is recommended that the transmission menu be sent to the analyzer before a recording is started.

2.4 PROGRAMMING MODE SELECTION

MT	(Parameters)	Trigger menu
MR	"	Trace menu
MC	"	Compare menu
MX	"	Transmission format
MD	"	Timing diagram programming
ML	"	List format programming

The control letter (M) followed by a menu selection character selects the current menu programming mode until a further (M) is received.

2.5 CONTROL CHARACTERS

All control characters are sent to the 500 Byte Command Buffer. The comma causes the command buffer to be executed by the LAM 4850.

Control Characters

* Reset the Logic Analyzer. (This character will cause the LAM 4850 to run through its power on/reset diagnostic.) If another character is sent, including a carriage return or line feed, before the diagnostic is completed (approximately five seconds), it will cause the bus to hang up.

% Halt recording - emulates pushing the stop button.

$ Clear the Logic Analyzer command buffer.

, Execute the command buffer - following the comma the LAM 4850 does not set busy status, however additional programming, including commas, may be sent as long as the 500 character buffer is not caused to overflow.

? Execute the command buffer and start Logic Analyzer - the LAM 4850 exhibits busy/error status after this command.

@ Execute the command buffer and start Logic Analyzer exert SRQ on RDY -the LAM 4850 exhibits busy/error status after this command.

' Menu load - inhibits error status until the next comma is sent. It is used to ignore temporary menu incompatibilities while they are being updated.

2.5.1 Reset (*)

Causes a reset sequence to be initiated. Emulates pressing the reset button on the LAM 4850. After sending the reset, a delay of five seconds or more must be observed before sending additional characters. This is to allow the reset diagnostic to run to completion.

2.5.2 Execute the Command Buffer Contents (,)

Causes the LAM 4850 to examine the contents of the command buffer and sequentially execute the control characters and command sequences. The LAM 4850 does not exhibit busy status during execution of the command buffer. Additional command sequences may be sent during execution as long as the 500 byte buffer capacity is not exceeded.

2.5.3 Execute the Command Buffer Contents and Start the Logic Analyzer (?)

Causes the same activity as in 2.5.2 and then starts the logic analyzer. Starting the logic analyzer emulates pushing the start button.

2.5.4 Execute the Command Buffer Contents, Start the Logic Analyzer, and Exert Service Request When Completed (@)

Causes the same activity as 2.5.3 except the LAM 4850 exerts service request (SRQ) on the GPIB Bus upon completion.

2.5.5 Clear the Command Buffer ($)

Causes the contents of the command buffer to be cleared. It is normally used to clear the buffer of unwanted commands that have been entered into the command buffer but have not yet been executed. Desired commands may then be entered and executed.

2.5.6 Halt Recording (%)

Emulates pressing the STOP button on the LAM 4850.

2.5.7 Menu Load (')

Disables error checking until an execute character has been received. Allows a full menu to be sent to the LAM 4850 before error checking is initiated. This will allow two fields to exist during update which would normally cause an error condition because a field from the old data, which has not been updated, is incompatible with a field of new data which has been updated.

2.6 COMMANDS

Commands are two or more characters separated from other commands and command sequences by space (SP) delimiters. Certain commands require amplification and/or modification. These sequences follow the command and are separated from the command and each other by the space (SP) delimiter.

#0 Display Update off - holds the LAM 4850 display with its current contents until the monitor update on command is received.

#1 Display Update on - causes the LAM 4850 to resume display update. Immediately updates to current status when this command is received.

&R Reference Data
&S Source Data
— to be programmed before executing Transmission menu.

&T Source Data ⟶ Reference memory transfer

&H Hexidecimal Addressing
&D Decimal Addressing
— concerns all addressing in all menus.

!1 Select block Transmission mode.

!2 Select special Transmission mode (Commodore PET compatible)

!3 Select GPIB (IEEE 488) STD Transmission mode.

!4 Select Hewlett Packard Transmission mode (CR) no (LF).

2.6.1 Display Update ON/OFF Command

#(N)

N = 0 OFF
N = 1 ON

Used to enable or disable the LAM 4850 display update.

2.6.2 Data/Address Command

&(A)

A = R Reference Data
A = S Source Data

Used to indicate whether the LAM 4850 is to send data from the source or reference memory for a transmit data command. See section 3.6.9.

A = T Transfer the source memory data to the reference memory. Emulates pressing the S⟶ R key.

A = H Hex addressing for menu and list programming.

A = D Decimal addressing for menu and list programming.

2.6.3 Transmission Mode Command

NOTATION

[is a transmitted bracket character.

( ) are delimiters, i.e., (:) indicates a transmitted colon only.

!(N)

N = 1 Block transmission mode

[(:)(DATA)(ETX)]

N = 2 Special Commodore PET compatible transmission mode.

[(LF)(S)(Data Block 1)(CR)- - - - - (LF)(S)(Data Block N)(CR) - - - - - (LF)(S)(CR)(ETX)]

NOTE: The last data block is zero characters in length to indicate end of data.

N = 3 GPIB standard transmission mode.

Same as for N = 2 except that a colon (:) is used in place of the (S).

N = 4 Hewlett Packard transmission mode.

Same as for N = 3 except that the (LF) character is not used.

This command is used to set up the format for a transmit data command section 2.6.9.

2.6.4 Program Trace Menu Command (MR)

A trace menu command is indicated by an (MR) followed by a sequence of character groups separated by single space character which modify certain parameters in the trace menu. The trace menu command is executed by sending one of the execute control characters following the last character in the command sequence. If additional trace menu programming is desired before another command type is initiated the (MR) need not be repeated. Any field left unprogrammed by omitting it from the sequence will result in previously stored or default data left in that field.

2.6.4.1 Analyzer Sequence Field S(N) [Label 0]

N = 1 Sequence one

N = 2 Sequence two

N = 3 Sequence three

N = 4 Sequence four

N = 5 Sequence five

2.6.4.2 Go Field G(N) (Label 1)

N = 1 Manual

N = 2 Free Run

2.6.4.3 Pod ON/OFF O(P) (L) (Label 2)

P = A Pods A and B

P = C Pods C and D

P = E Pods E and F

L = N ON

L = F OFF

2.6.4.4 Pod Fields P (L) (Labels 3, 4, 5 & 6) designates the pod for 2.6.4.4.1, Level Field; 2.6.4.4.2, Input Field; 2.6.4.4.3, Clock Field; and 2.6.4.4.4, Frequency Field.

L = A A and B Pods

L = C C and D Pods

L = E E and F Pods

L = Q Clock and Qualifier Pod (Level Field only)

2.6.4.4.1 Level Fields L (A) (Labels 3, 4, 5, & 6) used in conjunction with, and must follow, a pod field sequence. Order independent from the input, clock and sample rate fields.

A = T TTL 1.4 volts

A = 1 V1 Field level see sec 2.6.4.7.

A = 2 V2 Field level see sec 2.6.4.7.

A = P Level as set by the front panel pot.

2.6.4.4.2 Input fields I(L) (Label 3)

Used in conjunction with, and must follow, a pod field sequence. Order independent from the level, clock, and sample rate fields.

L = S Sample Mode

L = L Latch Mode

2.6.4.4.3 Clock field C(A). (Labels 3, 4, and 5)

Used in conjunction with, and must follow, a pod field sequence. Order independent from the level, input, and sample rate fields.

A = I Internal

A = 1 External Clock 1

A = 2 External Clock 2

A = 3 External Clock 3

2.6.4.4.4 Sample rate field F(N). (Labels 3, 4, and 5)

Used in conjunction with, and must follow, a pod field sequence. Order independent from the level, input, and clock fields.

N = O	20 nanoseconds
= 1	50 nanoseconds
= 2	100 nanoseconds
= 3	200 nanoseconds
= 4	500 nanoseconds
= 5	1 microsecond
= 6	2 microsecond
= 7	5 microsecond
= 8	10 microsecond
= 9	20 microsecond
=10	50 microsecond
=11	100 microsecond
=12	200 microsecond
=13	500 microsecond
=14	1 millisecond
=15	2 millisecond
=16	5 millisecond
=17	10 millisecond
=18	20 millisecond
=19	50 millisecond
=20	100 millisecond
=21	200 millisecond
=22	500 millisecond

2.6.4.5 Qualifier fields Q(N)(S) (Label 7)

N = 1	Qualifier 1 Field
N = 2	Qualifier 2 Field
N = 3	Qualifier 3 Field
S = +	High Active
S = -	Low Active
S = x	Inactive (no qualifier gating)

2.6.4.6 Clock Edge Fields E(N)(S) (Label 8)

N = 1	Clock 1
N = 2	Clock 2
N = 3	Clock 3
S = +	Rising Edge
S = -	Falling Edge

NOTE

If attempt to program this field is made with internal clock selected in all three clock fields (Sec. 2.6.4.4.3) an error condition will result.

2.6.4.7 Threshold Fields T (N1)(S)(N2) (Label 9)

N1 = 1	V1 Field
N1 = 2	V2 Field
S = +	Positive Voltage
S = -	Negative Voltage
N2 =	0 to 99 for 0 to 9.9 volts in 0.1 volt increments

NOTE

Before programming a threshold field a pod command must be given. See Sec. 2.6.4.4.

2.6.4.8 Trace menu programming example.

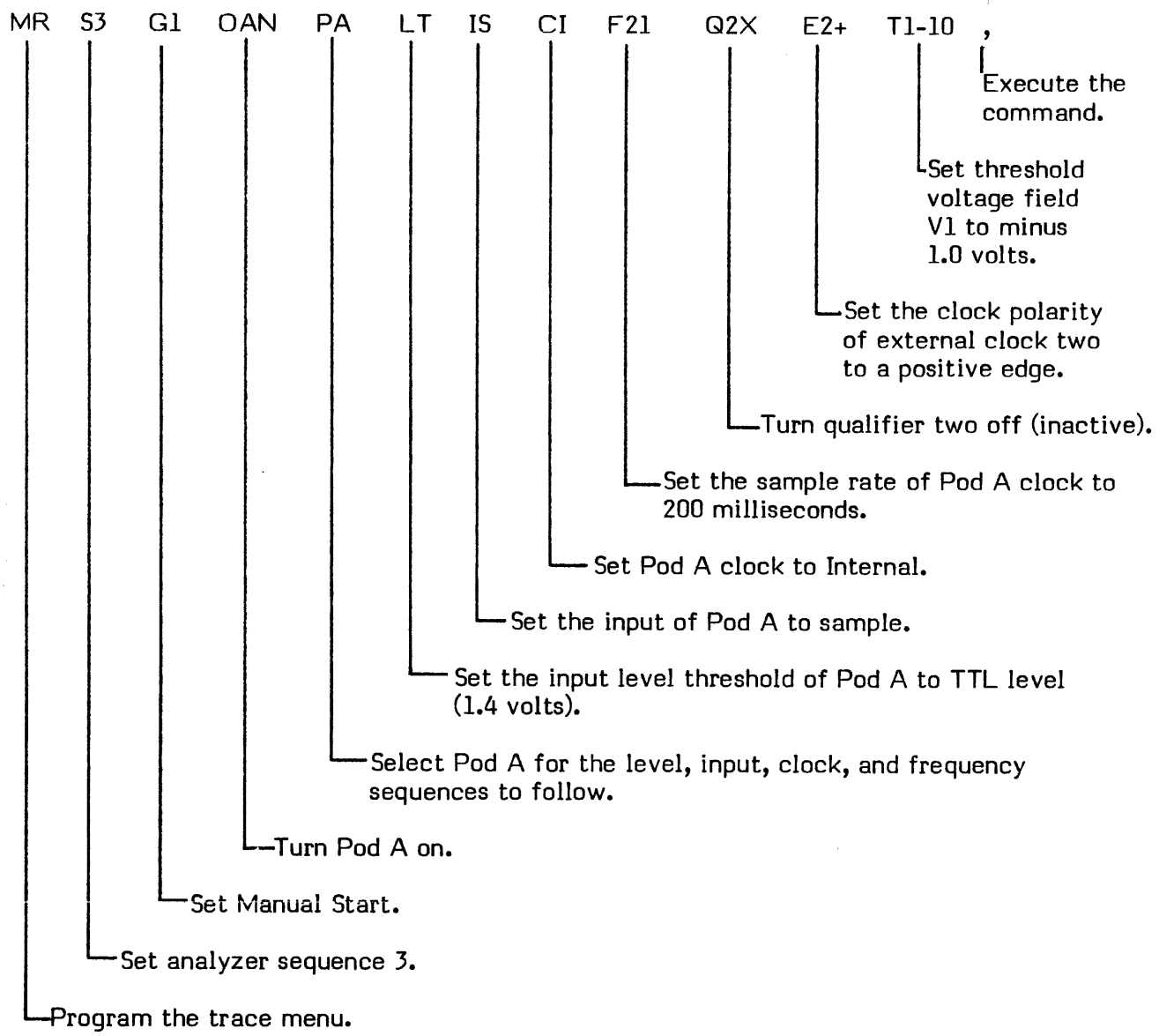

2.6.5 Program Trigger Menu Command (MT)

A program trigger menu command is indicated by an (MT) followed by a sequence of character groups separated by single space characters which modify certain parameters in the trigger menu. The trigger command is executed by sending one of the execute control characters following the last character in the command sequence. If additional trigger menu programming is desired before another command type is initiated the (MT) need not be repeated. Any field left unprogrammed by omitting it from the sequence will result in previously programmed or default data left in that field.

2.6.5.1 Level Select L(N) Corresponds to the First Four Levels in the Trigger Menu.

N = 1	Level 1
N = 2	Level 2
N = 3	Level 3
N = 4	Level 4

Sets the level for the following function, event count, and POD trigger word sequences.

2.6.5.1.1 Function F(N) (Field 8)

Order independent from the event count and POD trigger word sequences but must follow level select sequence.

N = 0	Start (Level 1 only)
N = 1	Free Run (Level 1)
	OFF (Level 2 thru 4)
N = 2	Then
N = 3	Then not
N = 4	Restart (Level 4 only)

2.6.5.1.2 Event Count E(N) (Field 9)

Order independent from the function and POD trigger word select sequences but must follow a level select sequence.

N = 1 to 255	For 1 to 255 event counts before moving to the next trigger level, trigger delay or trigger.

2.6.5.1.3 POD Trigger Word P(L)(NNNNNNNN) (Fields A thru F)

N = 0	Binary Zero
N = 1	Binary One
N = X	Don't Care

Order independent from the function and event count sequences but must follow a level select sequence.

NOTE

POD trigger words can be remotely programmed in positive binary only.

2.6.5.2 Clock Select C(A) (Level 5)

L = A thru F for PODS A thru F

A = I Internal

A = 1 External Clock 1

A = 2 External Clock 2

A = 3 External Clock 3

NOTE

External clocks must be selected in trace menu levels 3, 4, or 5 in order to be programmed successfully in this field.

2.6.5.3 Delay Select D(N) Level 5

N = 0 thru 4095 for delay counts 0 thru 409

2.6.5.4 Trigger Menu Programming Example

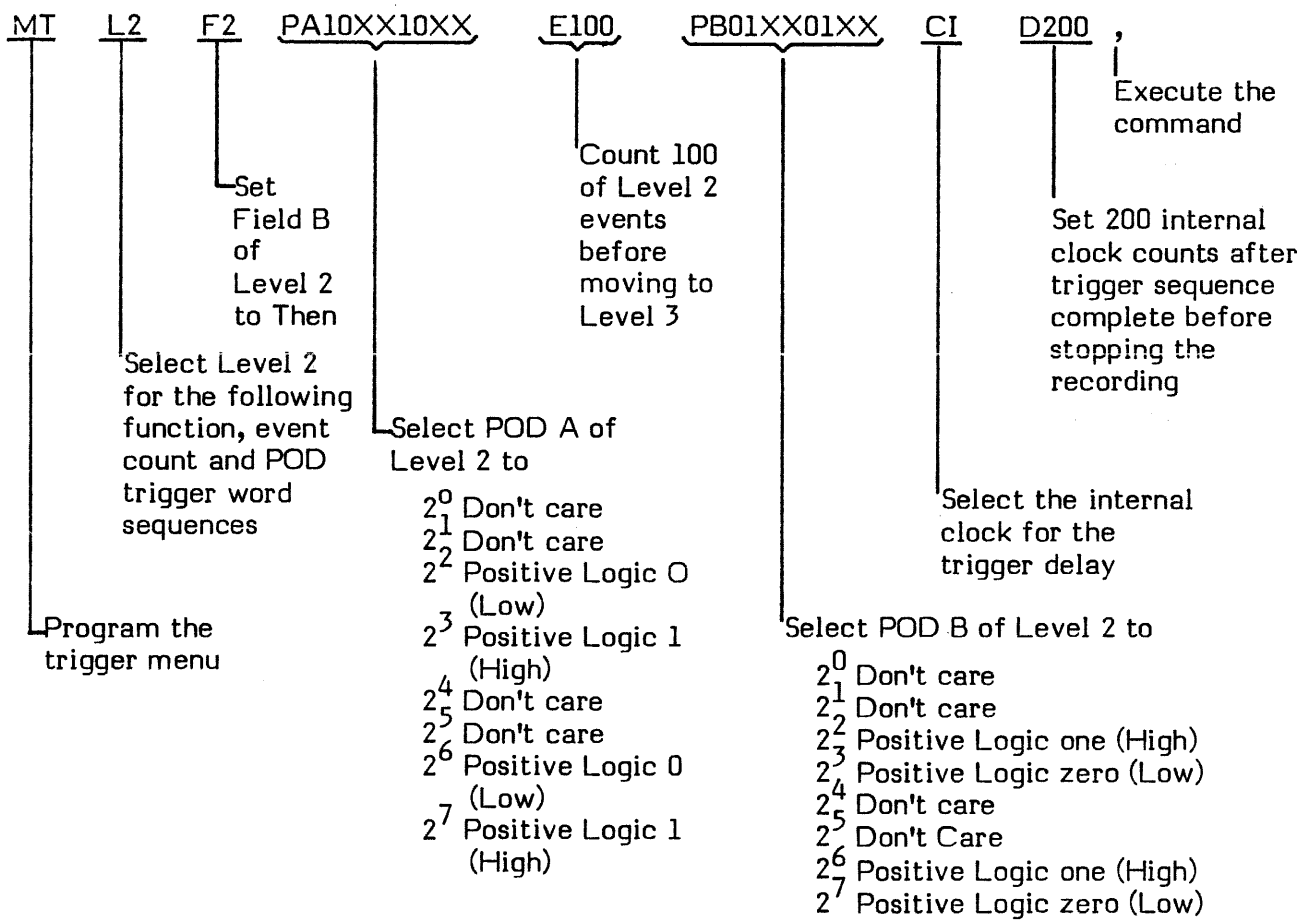

2.6.6 Program Compare Menu Command

A program compare menu command is initiated by an (MC) followed by a sequence of character groups separated by space characters which modify certain parameters in the compare menu. The compare menu program command is set into execution by sending one of the execute control characters following the last character in the command sequence. If additional compare menu programming is desired before another command type is initiated the (MC) need not be repeated. Any field left unprogrammed by omitting it from the sequence will result in previously programmed or default data left in that field.

2.6.6.1 Section Select B(N).

Selects the section of the compare menu for the following sequence of program sequences.

B = 1 Section 1

B = 2 Section 2

2.6.6.1.1 Location Count L(N)

Selects the number of locations in the source and reference menus to be compared.

N = A range of values from 0 to 999 or 0 to 1999 depending on the configuration selected in label two of the trace menu.

2.6.6.1.2 Source Start Address S(N)

Selects the starting address in the source menu.

N = A range of values from 0 to 999 or 0 to 1999 depending on the configuration selected in Label two of the trace menu.

2.6.6.1.3 Reference start address R(N)

Selects the starting address in the reference menu.

N = A range of value from 0 to 999 or 0 to 1999 depending on the configuration selected in Label two of the trace menu.

2.6.6.1.4 Pod Select P(L1)(L2)(L3)

Selects the POD data which is to be used in the compare process.

L = A A and B PODS

L = C C and D PODS

L = E E and F PODS

Pod pairs which are not to be used in the compare process are omitted from the sequence and the remainder of the field is left justified.

2.6.6.1.5 Skew Select K(N)

Selects range of skew, plus and minus, over which the selected data will be compared.

N = 0 to 9 for ranges of 0 to plus and minus 9.

2.6.6.2 Function Select F(N)

Selects the functions for Level C of the compare menu.

N = 0 Halt on R = S

N = 1 Halt on R< >S (not equal)

N - 2 Count on R = S

N = 3 Count on R<=>S (not equal)

2.6.6.3 Compare Menu Programming Example

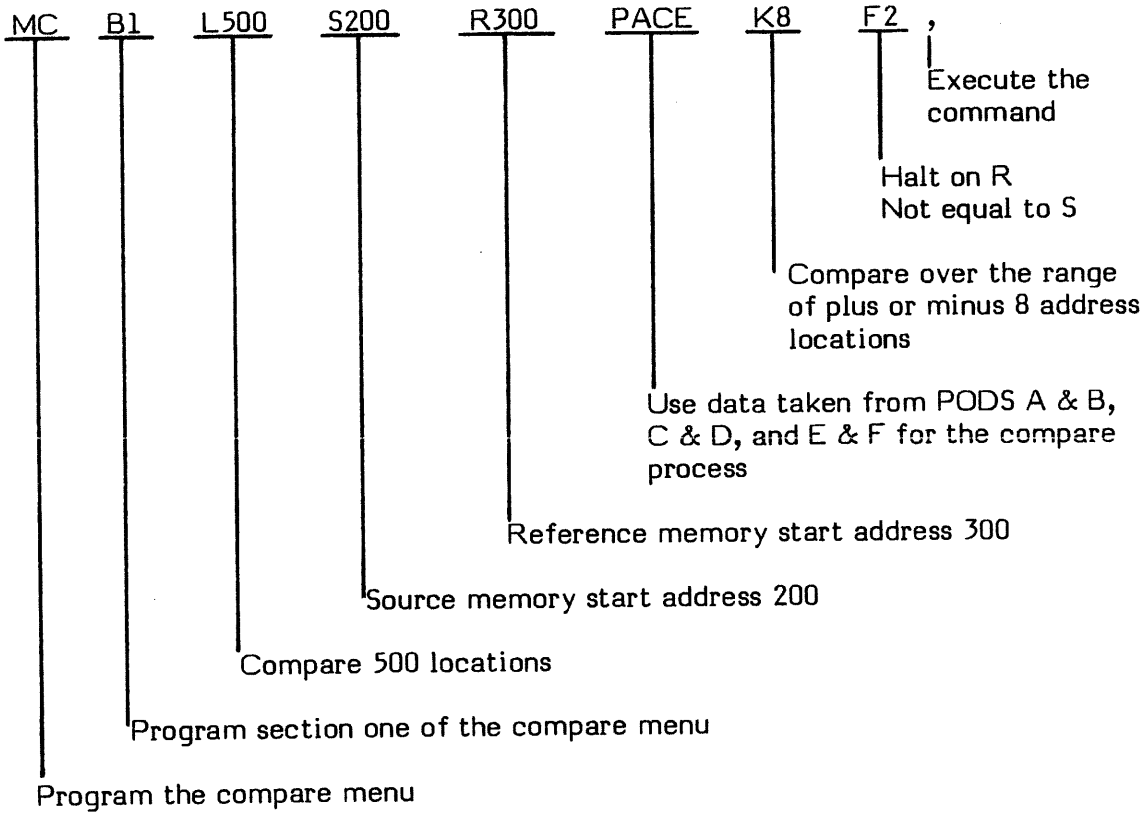

2.6.7 Program Timing Diagram Command

A program timing diagram command is initiated by an (MD) followed by a sequence of character groups separated by single space characters which modify certain parameters in the timing diagram. The command is set into execution by sending one of the execute control characters following the last character in the command sequence. If additional timing diagram programming is desired before another command type is initiated the (MD) need not be repeated. Any field left unprogrammed by omitting it from the sequence will result in previously programmed or default data left in that field.

2.6.7.1 Scale Select X(N)

Selects the time scale of data selected on the display.

N = 1	X1	Times one
N = 2	X10	Times ten
N = 3	X20	Times twenty

2.6.7.2 Channel Display and Position Command C(N1)(N2)

Selects the position in the display for each channel.

- N1 N = 0 thru F hex for the sixteen channel locations in the timing diagram. 0 is the top most and F the bottom most.
- N2 Channel to be displayed at the N1 position. A0 thru A7 and B0 thru B7.

2.6.7.3 Channel OFF command C(N)O

Turns the (N) channel off and leaves the location blank. A channel may be turned back on using the channel display and position command, i.e., C1A1 would display channel A1 in its default location, the second line in the timing diagram.

- N = 0 thru F hex for the sixteen channel locations in the timing diagram.

2.6.7.4 Timing Diagram Programming Example

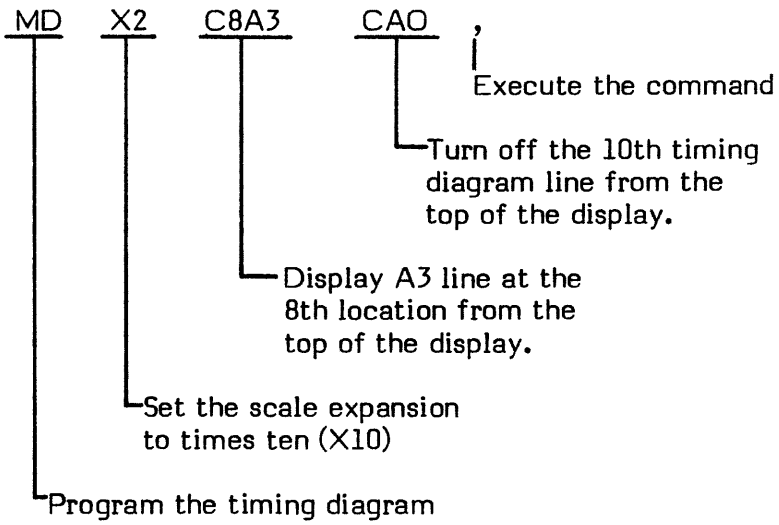

2.6.8 Program List Display Command

A program list menu command is initiated by an (ML) followed by a sequence of character groups separated by single space characters which modify certain parameters in the list display. The command is set into execution by sending one of the execute control characters following the last character in the command sequence. If additional list menu programming is desired before another command type is initiated the ML need not be repeated. Any parameter left unprogrammed by omitting it from the sequence will result in previously programmed or default data left in that field.

2.6.8.1 POD select command P (L1)(S)(L2).

Selects data from a selected POD and its format to be added to the list display.

L1	=	A thru F for data from PODS A thru F
S		+ = Positive true data display
		- = Negative true data display
L2		A = ASCII data display
		B = Binary data display
		H = Hexidecimal data display
		O = Octal data display

2.6.8.2 POD Off Command P(L)O

Removes the data corresponding to the L POD from the display.

L	=	A thru F for PODS A thru F

2.6.8.3 List Display Program Example

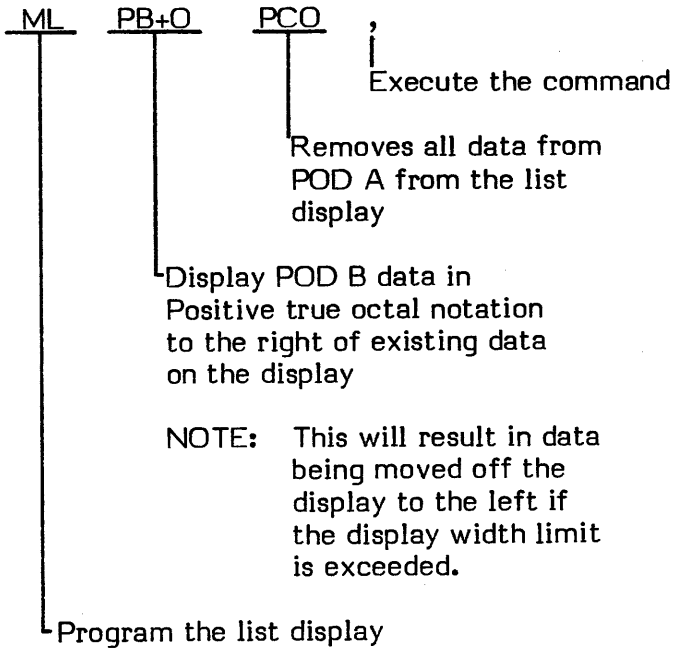

2.6.9 Transmit Data Format Command

A transmit data format command is initiated by sending an (MX) followed by a sequence of character groups separated by single space characters which modify and/or amplify the command. The command is set into execution by sending one of the control characters folowing the last character in the command sequence. This command causes the LAM 4850 to load data into its output buffer according to the format explained in section 2.6.3. Actual reading of the data is done by successive readings of the LAM 4850 output register.

NOTE: Data may not be read from the LAM 4850 source or reference memory until after a data recording has been made.

2.6.9.1 POD Select Command P(LLLLLL)

Selects data which has been entered into the LAM 4850 memory through the specified PODS.

L = A thru F for PODS A thru F. Unprogrammed PODS may be omitted and the field left justified.

2.6.9.2 Memory Starting Address command S(N)

Sets the starting address for the data to be loaded into the output buffer for transmission over the GPIB Bus. Data will be sent from the source or reference memory depending on which data/address command (&S or &R) has been previously sent. See section 2.6.2.

N = 0 to 999 or 0 to 1999 decimal depending on which sequence has been selected in the trace menu. See section 2.6.4.1. The address may also be sent in the corresponding hexidecimal addresses depending on which data/address command (&H or &D) has been previously sent.

2.6.9.3 Memory Ending Address Command E(N)

Sets the ending address for the data to be loaded into the output buffer for transmission over the GPIB Bus.

NOTE

Address information is dependent upon address mode (&H or &D) selected.

2.6.9.4 Menu Transmit Command (L)

Used to select menu data to be loaded into the output buffer for transmission over the GPIB Bus.

L = T Trigger Menu

L = R Trace Menu

L = C Compare Menu

For this command data is returned according to the transmission mode selected. See section 2.6.3. Sequences are sent according to the format specified in sections 2.6.4, 2.6.5 and 2.6.6. Exact order and length of sequences is menu configuration and content dependent therefore the content of each individual block must be decoded by the receiving GPIB unit.

2.6.9.5 Transmit Data format Examples

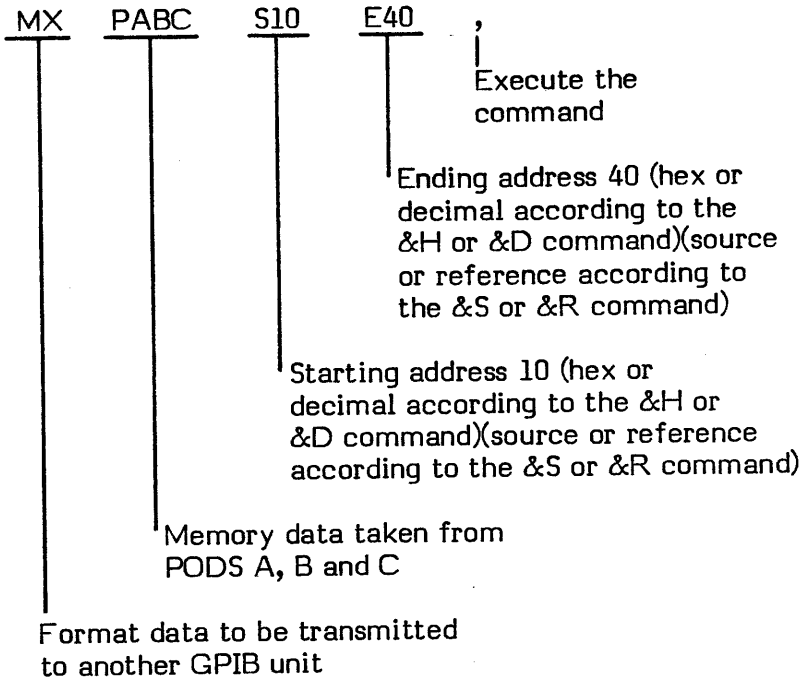

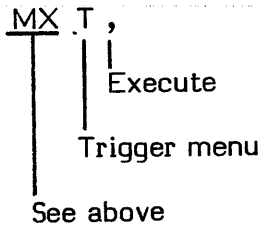

2.7 DATA TRANSFER

2.7.1 Handshake

The GPIB bus uses three lines to control data transfer. They are data valid (DAV), not ready for data (NRFD) and not data accepted (NDAC). Normally the eight data lines (DI01-8) and DAV are driven by the bus talker and NRFD and NDAC are driven by the bus listener(s) to acknowledge acceptance of data. This is accomplished in the following manner.

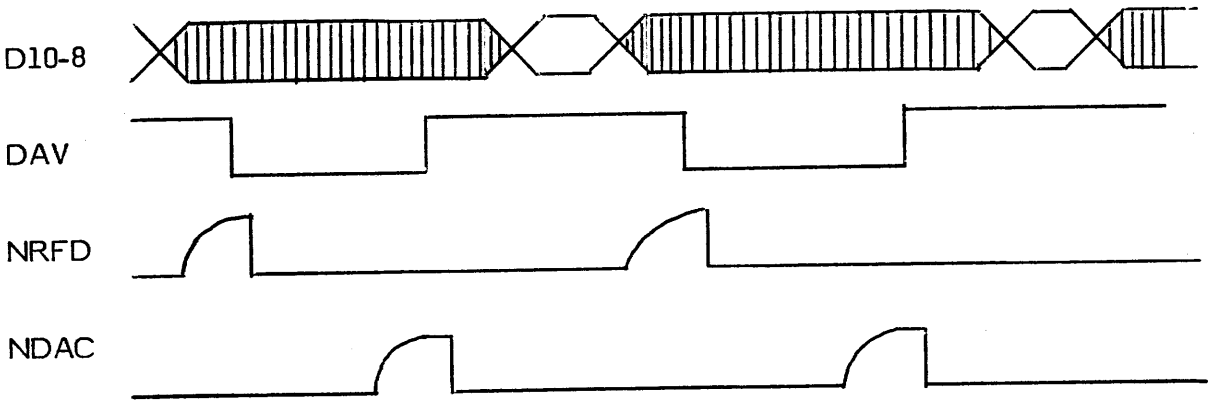

The talker checks that NDAC is low and that NRFD is low (both high indicates an error condition), then sets the data on the data bus.

When NRFD goes high indicating that the listener(s) are ready for data the talker then drives DAV low, indicating that the data is valid.

NRFD is driven low by the listener(s) to indicate that it (they) are not ready for data.

The NDAC line then goes high indicating that the listener(s) has accepted the data.

The talker then drives DAV high ending the cyc and the listener(s) drive NDAC low readying the bus for another cycle.

For a more complete and detailed description of the handshake, consult the IEEE STD 488-1978.

2.7.2 Talk Sequence for the LAM 4850

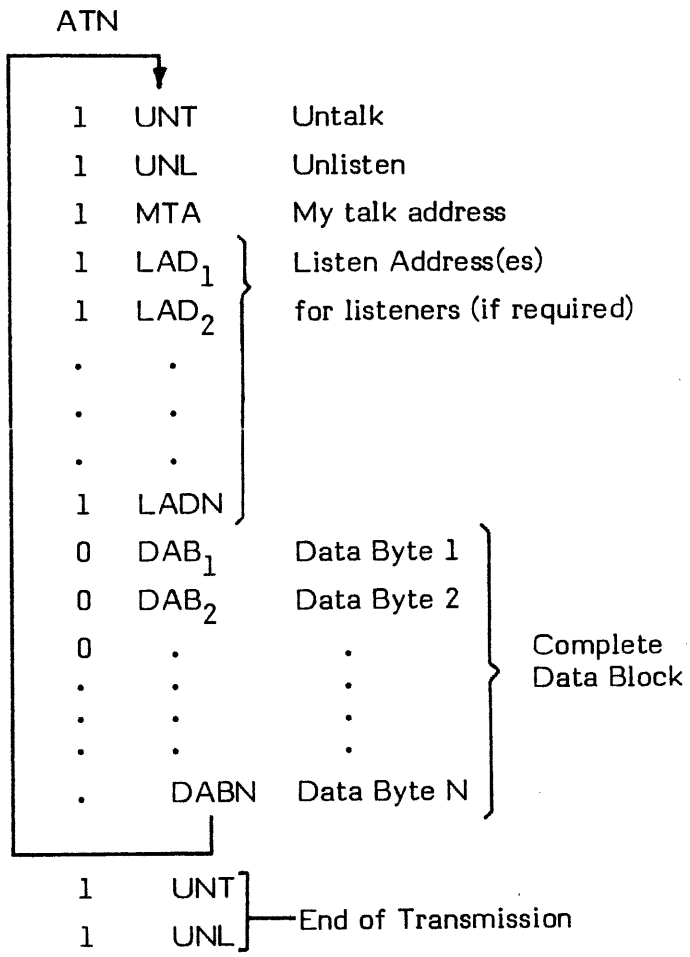

The bus controller sets ATN true , sends UNT, UNL, and the talk address of the LAM 4850, then any listen addresses that may be required. When the controller drives ATN false, the LAM 4850 sends one block of data. The sequence must be repeated for each data block.

2.7.3 Listen Sequence for the LAM 4850

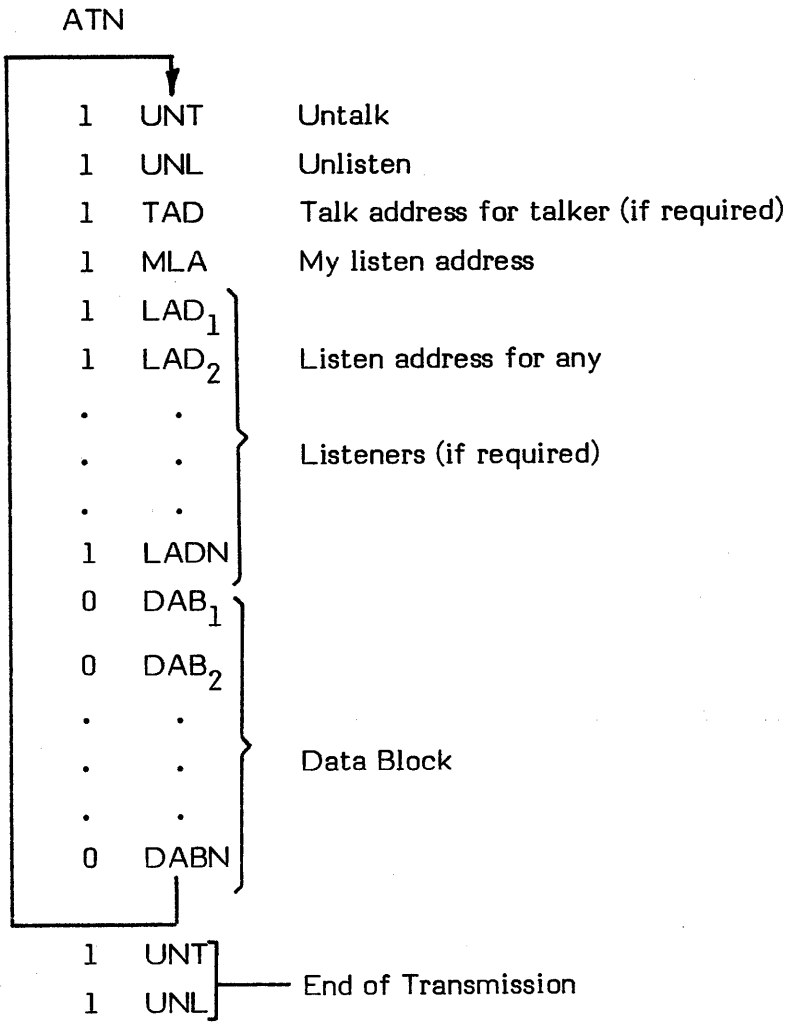

The bus controller sets ATN true, sends UNT, UNL, and the talk address for the talker, if required. The LAM 4850 listen address is sent, along with any other listen addresses required. When the bus controller drives ATN false, the LAM 4850 receives data sent over the bus. The sequence must be repeated for each data block.

2.7.4 Status

Reading status from the LAM 4850 is accomplished using the serial poll sequence. Parallel poll is not supported.

ATN

1	UNT	Untalk
1	UNL	Unlisten
1	SPE	Serial Poll Enable
1	MTA	My Talk Address
0	STB	Status Byte
1	SPD	Serial Poll Disable
1	UNT	Untalk

The controller sets ATN true and sends UNT, UNL, SPE, and MTA to the LAM 4850. When the controller sets ATN false, the LAM 4850 sends the status byte. If additional status is desired the controller sets ATN true and sends MTA to initiate another status byte transfer from the LAM 4850. If no additional status is desired the controller sends SPD and UNT to end the sequence.

Status may also be read directly from the LAM 4850 data register using the talk sequence. In this case, one byte will be returned. The most significant four bits will be a "Y" for busy or an "X" for error. The lower four bits will contain the busy or error code.

Status Byte

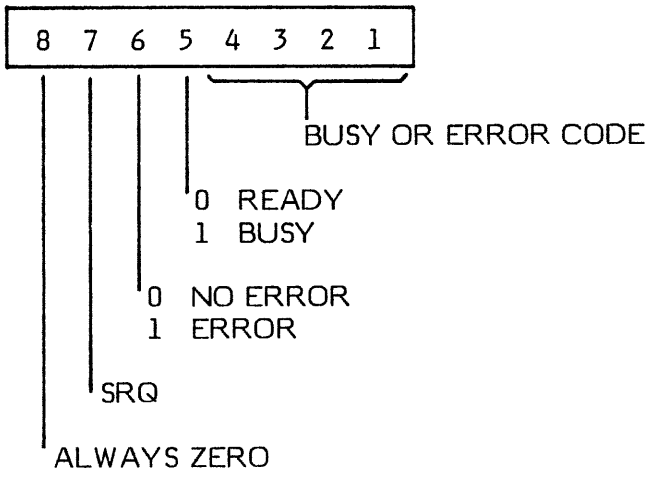

If both busy and error bits are set, bits 1 thru 4 will indicate the error code.

Reading the serial poll register will cause the error bit to be cleared to zero.

The recommended method for monitoring status is to start a recording with the @ character and monitor the SRQ bit to determine when the LAM 4850 has completed the recording and is ready to proceed. If the busy bit is monitored instead it must be insured that the busy bit has gone true and then back to false before assuming that the recording has been completed.

Error Codes

B4	B3	B2	B1	
0	0	0	0	not used
0	0	0	1	parameter out of range
0	0	1	0	invalid function in trig menu
0	0	1	1	free run in trig menu. No level function may be programmed
0	1	0	0	invalid pod - may not be programmed
0	1	0	1	incorrect trig. word
0	1	1	0	invalid parameter
0	1	1	1	invalid function assignment
1	0	0	0	command buffer full
1	0	0	1	incorrect ref address B1 - (A Section)
1	0	1	0	incorrect src address B1 - (A Section)
1	0	1	1	incorrect ref address B2 - (B Section)
1	1	0	0	incorrect src address B2 - (B Section)
1	1	0	1	null locations B 1 & B 2
1	1	1	0	not used
1	1	1	1	not used

Busy Codes

B4	B3	B2	B1		
0	0	0	0	interpreter active (note I)	
0	0	0	1	data block prep in progress	
0	0	1	0	menu info prep in progress	
1	0	0	1	slow clock E & F	any combination of these three may occur.
1	0	1	0	slow clock C & D	
1	1	0	0	slow clock A & B	
1	0	0	0	searching for trigger	
0	1	1	1	trigger delay active	
0	1	1	0	compare menu active	

2.7.5 Output Format

See Sec. 2.6.3 for transmission block configuration. The entire transmission is enclosed in brackets. " [" is the first character and "]" is the last.

Data blocks are in the following format.

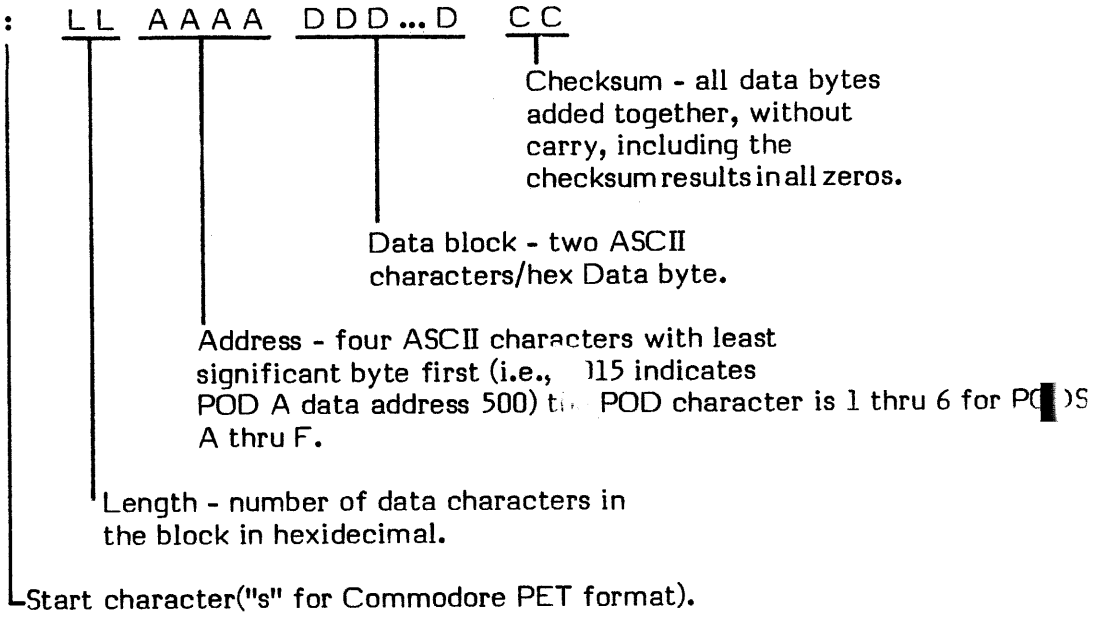

The first block transmitted is five bytes long. The information of value in this block is the trigger information. It is contained in the third and fourth data bytes, again byte swapped (i.e., 6400 indicates that the trigger is at address 0064). In order to read valid trigger information the LAM 4850 must be in start mode (Trace menu), have successfully completed a trigger sequence, and completed a recording.

The entire transmission is enclosed in brackets. The last block in a transmission is zero characters in length.

2.8 LOADING THE SOURCE AND REFERENCE MEMORIES FROM THE GPIB.

2.8.1 Source or reference is selected for loading by sending the &(A) command. See Sec. 2.6.2.

2.8.2 The first block must be a special one consisting of bytes with the following format.

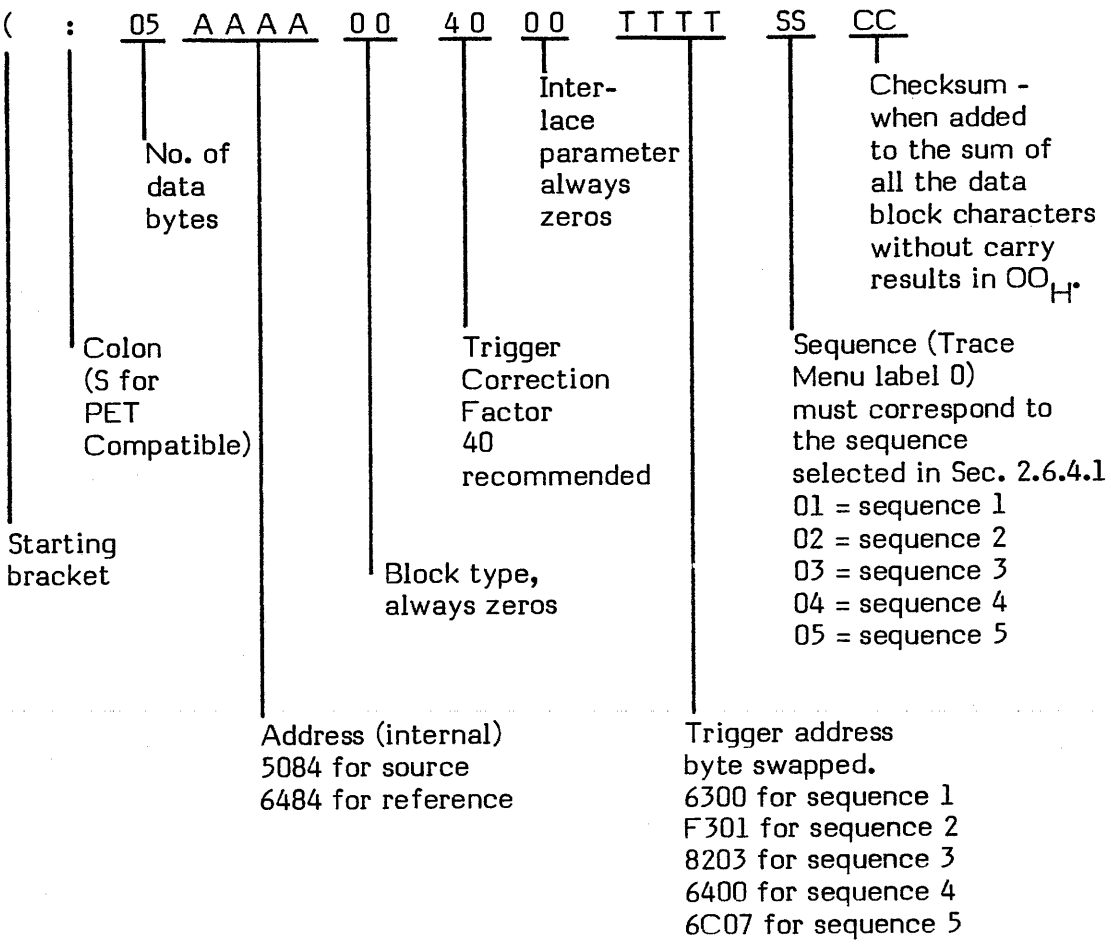

2.8.3 Data is sent via the format shown in section 2.7.5. Twenty-six (decimal) character byte blocks are recommended. A different size block may be needed for odd character at the end of course.

2.8.4 The ending block must be zero characters in length with the following format.

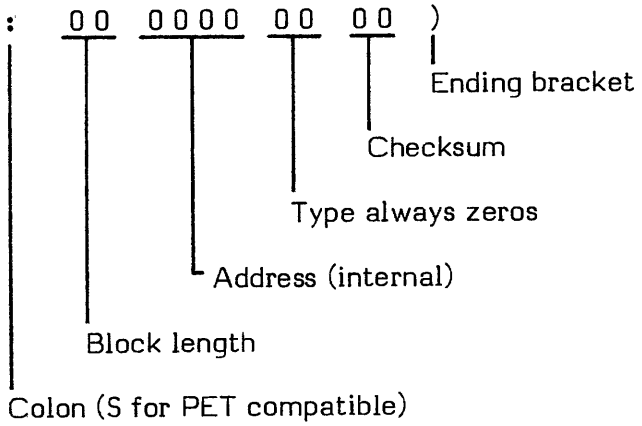

2.9 RECOMMENDED SEQUENCE FOR TAKING A DATA RECORDING AND READING THE RESULTS.

2.9.1 !(N) transmission mode command. See section 2.6.3.

2.9.2 &R or &S data/address command. See section 2.6.2.

2.9.3 &H or &D data/address command. See section 2.6.2

2.9.4 MX transmit data format command sequence. See section 2.6.9.

2.9.5 MR program trace menu command sequence. See section 2.6.4.

2.9.6 MT program trigger menu command sequence. See section 2.6.5.

2.9.7 Start a recording using the @ character and monitor SRQ for ready. See section 2.7.4.

2.9.8 Check for error stats using a serial poll status sequence. See section 2.7.4.

2.9.9 Read data from the LAM 4850. See section 2.7.5

2.9.10 Program the compare menu, timing diagram, and list display. See section 2.6.6, 2.6.7, and 2.6.8 respectively.

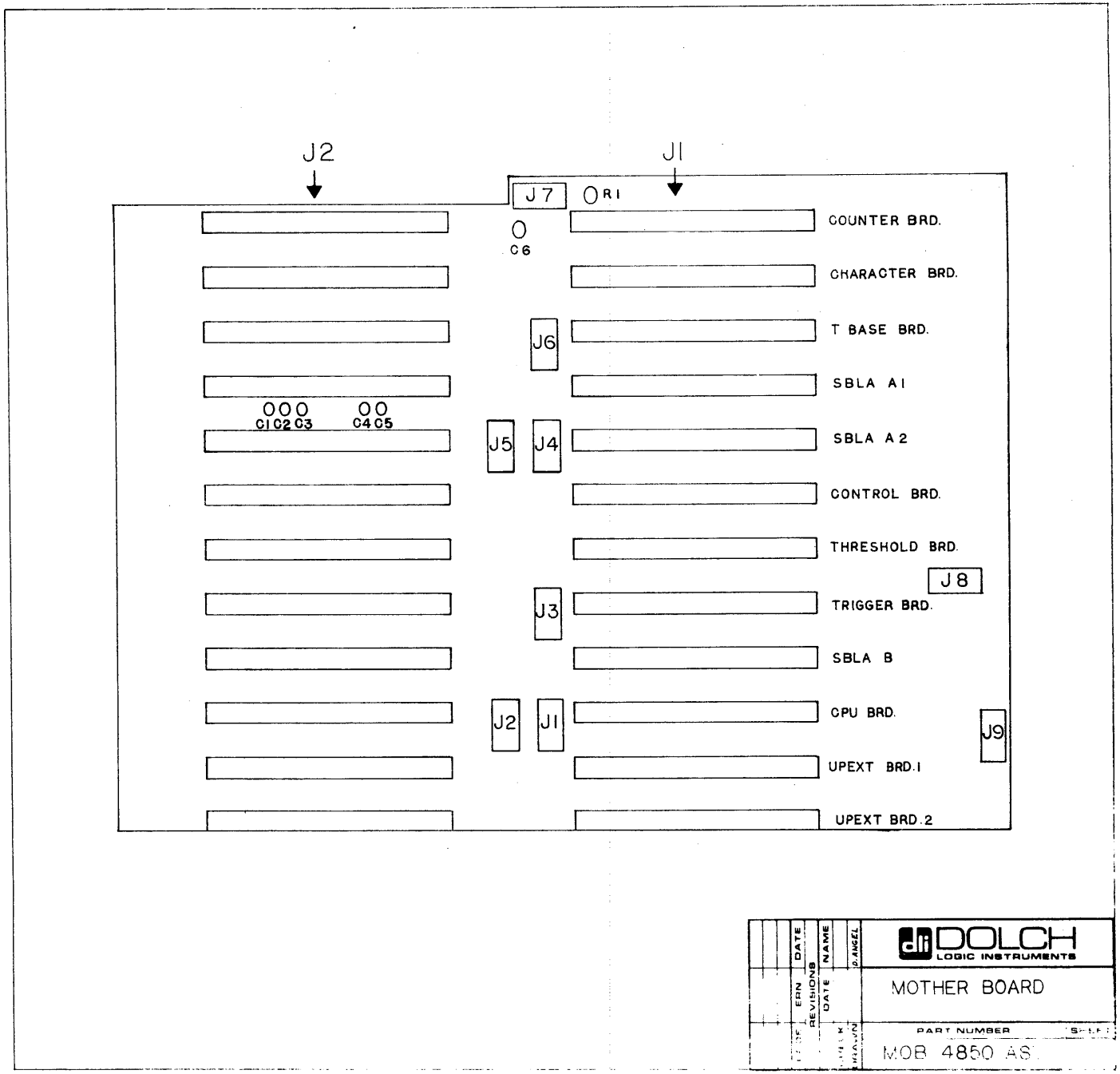
J2
J1
J7
R1
C6
C1 C2 C3
C4 C5
J6
J5
J4
J3
J2
J1
J8
J9
COUNTER BRD.
CHARACTER BRD.
T BASE BRD.
SBLA A1
SBLA A2
CONTROL BRD.
THRESHOLD BRD.
TRIGGER BRD.
SBLA B
CPU BRD.
UPEXT BRD.1
UPEXT BRD.2
DOLCH
LOGIC INSTRUMENTS
MOTHER BOARD
PART NUMBER
MOB 4850 AS
DATE
NAME
D.ANGEL
REVISIONS
ERN
DATE

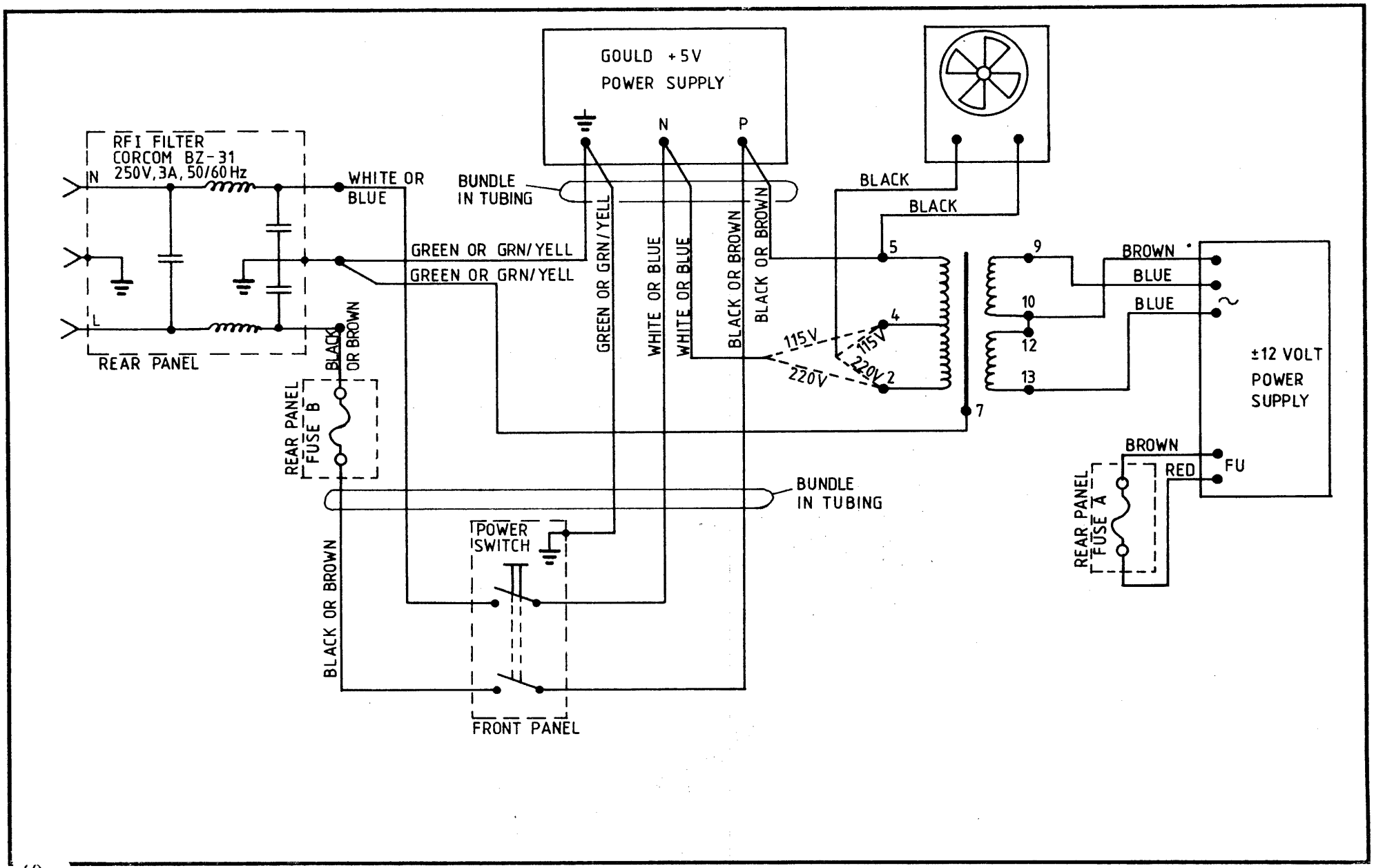
GOULD +5V
POWER SUPPLY
N
P
RFI FILTER
CORCOM BZ-31
250V, 3A, 50/60Hz
IN
L
REAR PANEL
WHITE OR
BLUE
BUNDLE
IN TUBING
GREEN OR GRN/YELL
GREEN OR GRN/YELL
WHITE OR BLUE
WHITE OR BLUE
BLACK OR BROWN
BLACK OR BROWN
BLACK
BLACK
5
4
2
7
115V
115V
220V
220V
9
10
12
13
BROWN
BLUE
BLUE
±12 VOLT
POWER
SUPPLY
BROWN
RED
FU
REAR PANEL
FUSE A
REAR PANEL
FUSE B
BLACK
OR BROWN
BUNDLE
IN TUBING
POWER
SWITCH
BLACK OR BROWN
FRONT PANEL

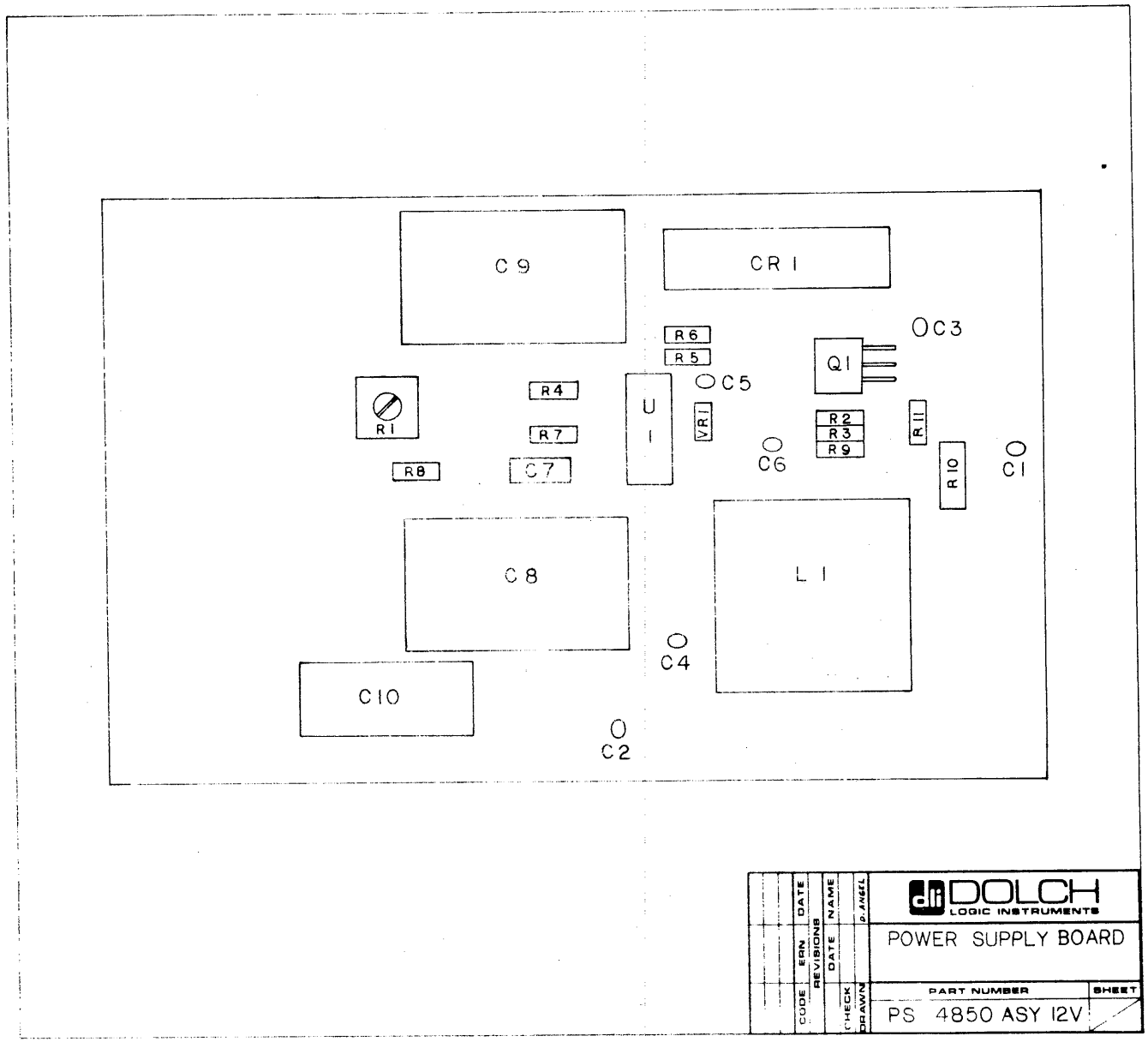
C9
CR1
C3
R6
R5
Q1
C5
R4
U1
R1
VR1
R2
R3
R9
R11
R7
C6
C1
R8
C7
R10
C8
L1
C4
C10
C2
DOLCH
LOGIC INSTRUMENTS
POWER SUPPLY BOARD
PART NUMBER
SHEET
PS 4850 ASY 12V
CODE
ERN
DATE
REVISIONS
NAME
DATE
CHECK
DRAWN
P. ANGEL

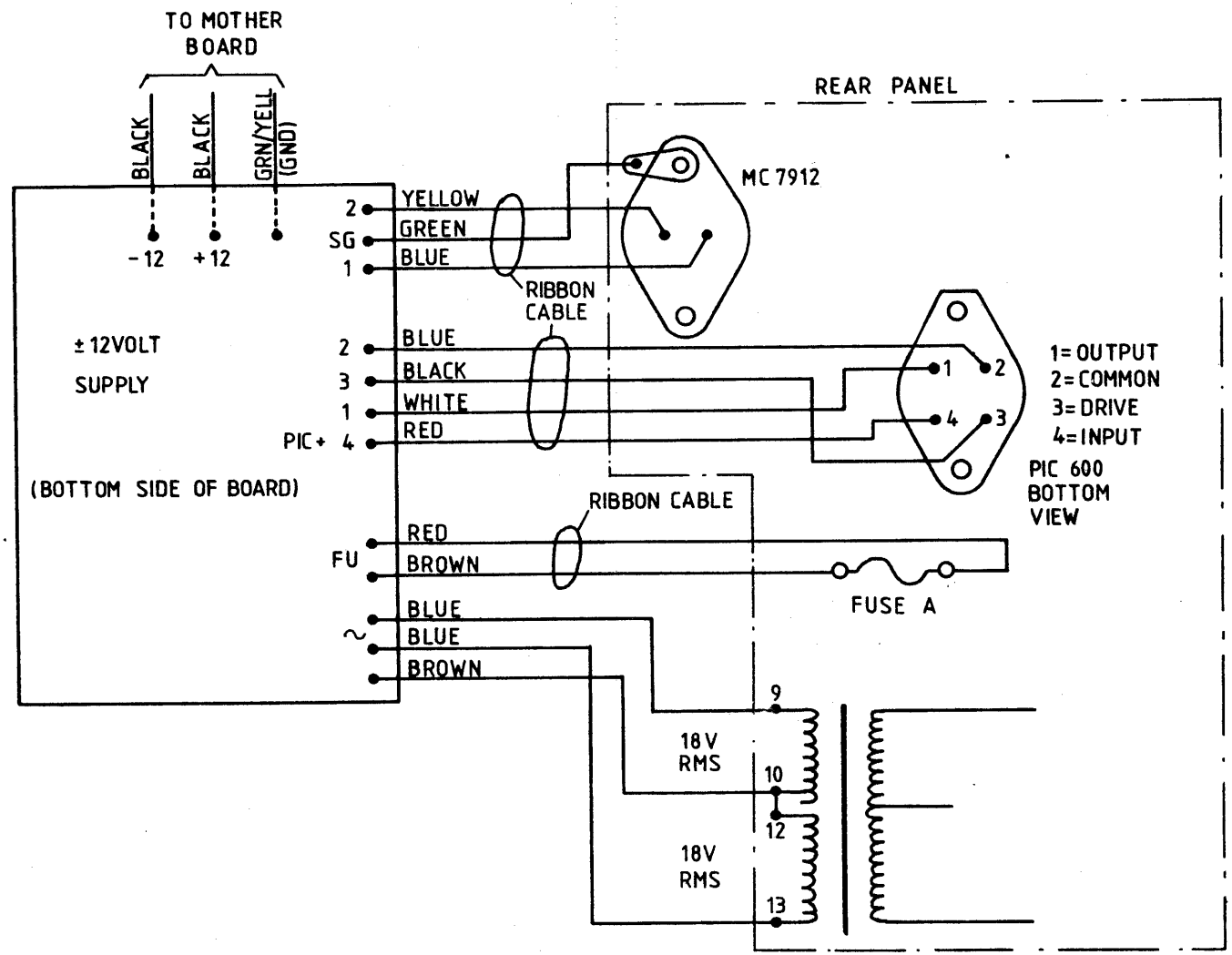
TO MOTHER BOARD
BLACK
BLACK
GRN/YELL (GND)
-12
+12
REAR PANEL
MC 7912
2
SG
1
YELLOW
GREEN
BLUE
RIBBON CABLE
± 12VOLT SUPPLY
2
3
1
PIC+ 4
BLUE
BLACK
WHITE
RED
1= OUTPUT
2= COMMON
3= DRIVE
4= INPUT
PIC 600 BOTTOM VIEW
(BOTTOM SIDE OF BOARD)
RIBBON CABLE
FU
RED
BROWN
FUSE A
BLUE
BLUE
BROWN
9
18V RMS
10
12
18V RMS
13

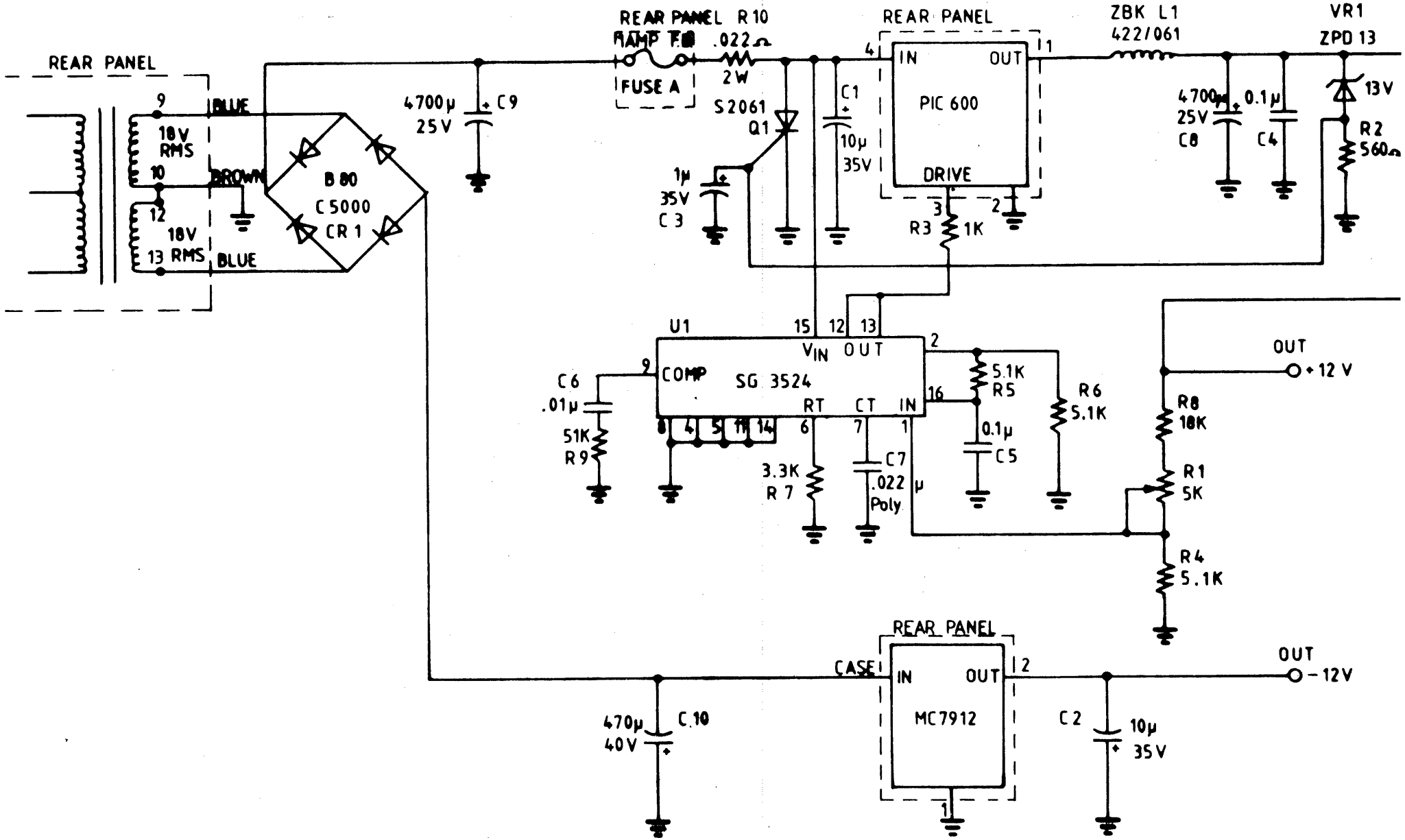
REAR PANEL
9
10
12
13
18V RMS
18V RMS
BLUE
BROWN
BLUE
B 80 C 5000 CR 1
4700µ 25V C9
REAR PANEL R 10 .022Ω 2W
FUSE A
S2061 Q1
1µ 35V C3
C1 10µ 35V
REAR PANEL
4
1
IN
OUT
PIC 600
DRIVE
3
2
R3 1K
ZBK L1 422/061
4700µ 25V C8
0.1µ C4
VR1 ZPD 13
13V
R2 560Ω
U1
15
12
13
VIN
OUT
2
9
COMP
SG 3524
16
RT
CT
IN
8
4
5
11
14
6
7
1
C6 .01µ
51K R9
3.3K R 7
C7 .022µ Poly
5.1K R5
0.1µ C5
R6 5.1K
OUT
+12 V
R8 10K
R1 5K
R4 5.1K
REAR PANEL
CASE
IN
OUT
2
1
MC7912
OUT
-12V
470µ 40V C.10
C 2 10µ 35V

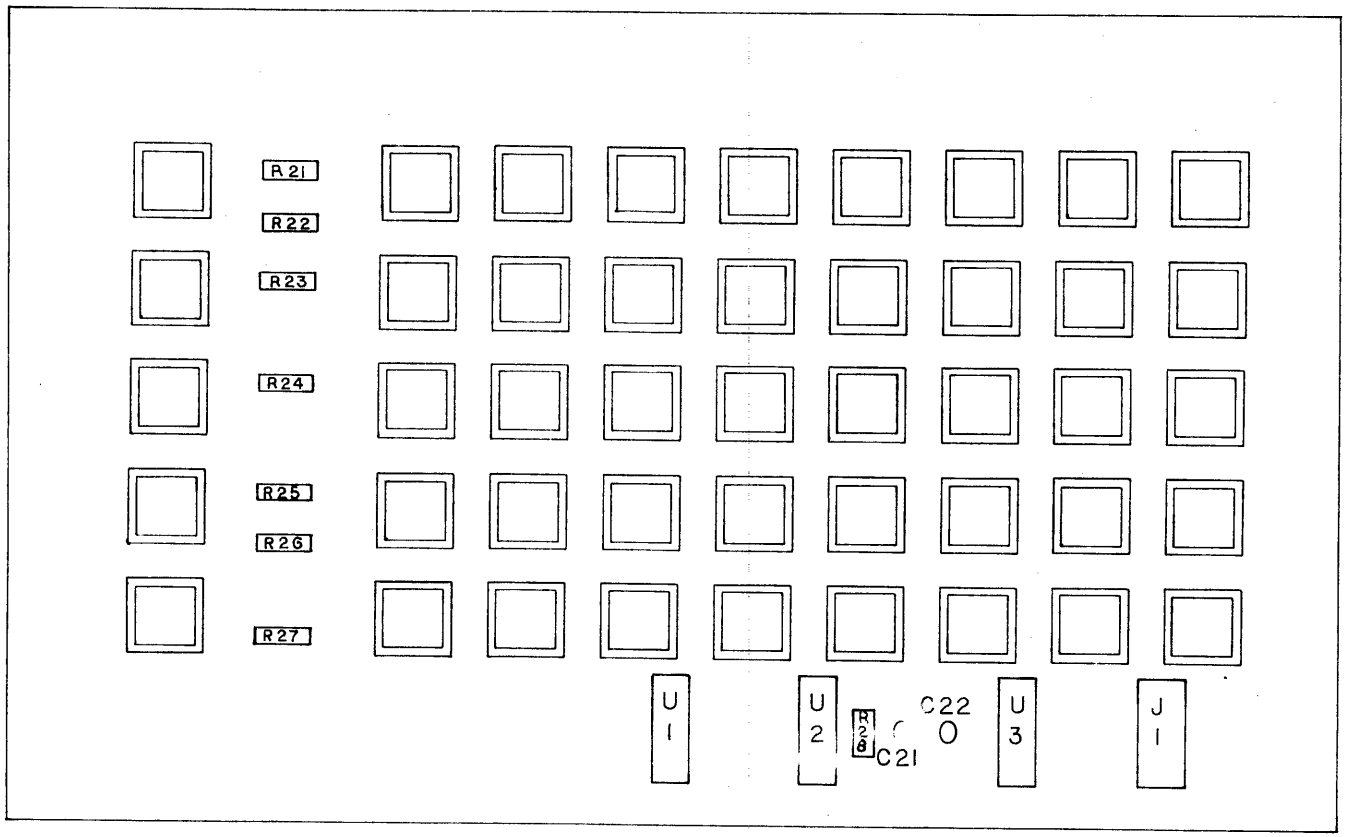

CODE	ERN	DATE	REVISIONS	DATE	NAME
				CHECK	
				DRAWN	D. ANGEL

dli DOLCH LOGIC INSTRUMENTS

KEYBOARD

PART NUMBER: KEY 4850 ASY

SHEET

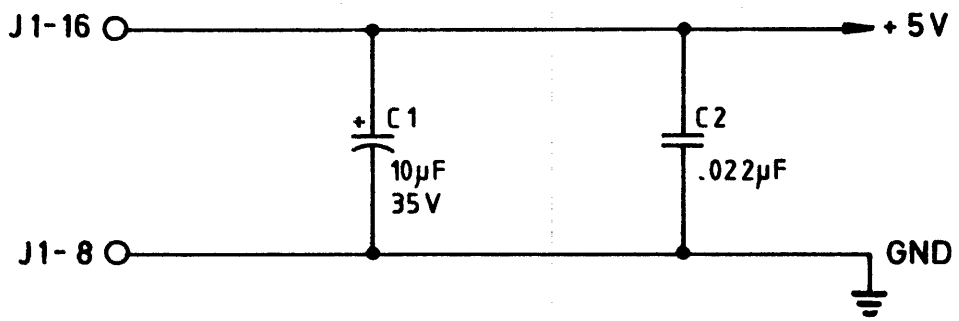

KEYBOARD

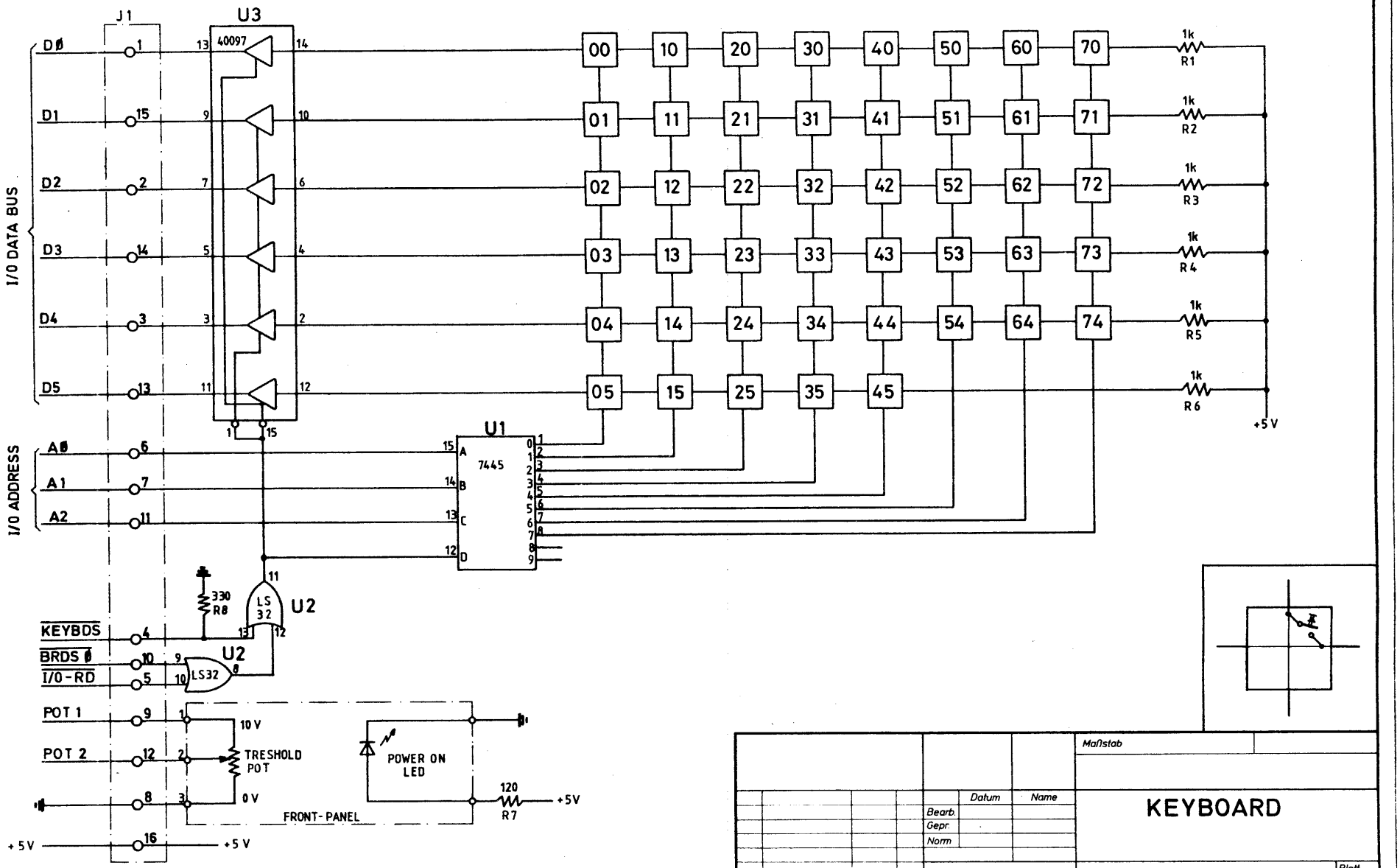

				Maßstab	
			Datum	Name	KEYBOARD
			Bearb.		
			Gepr.		
			Norm		
					Blatt
Zust.	Änderung	Datum	Name		Bl

Bestell-Nr 643 430 90195 glqm

156

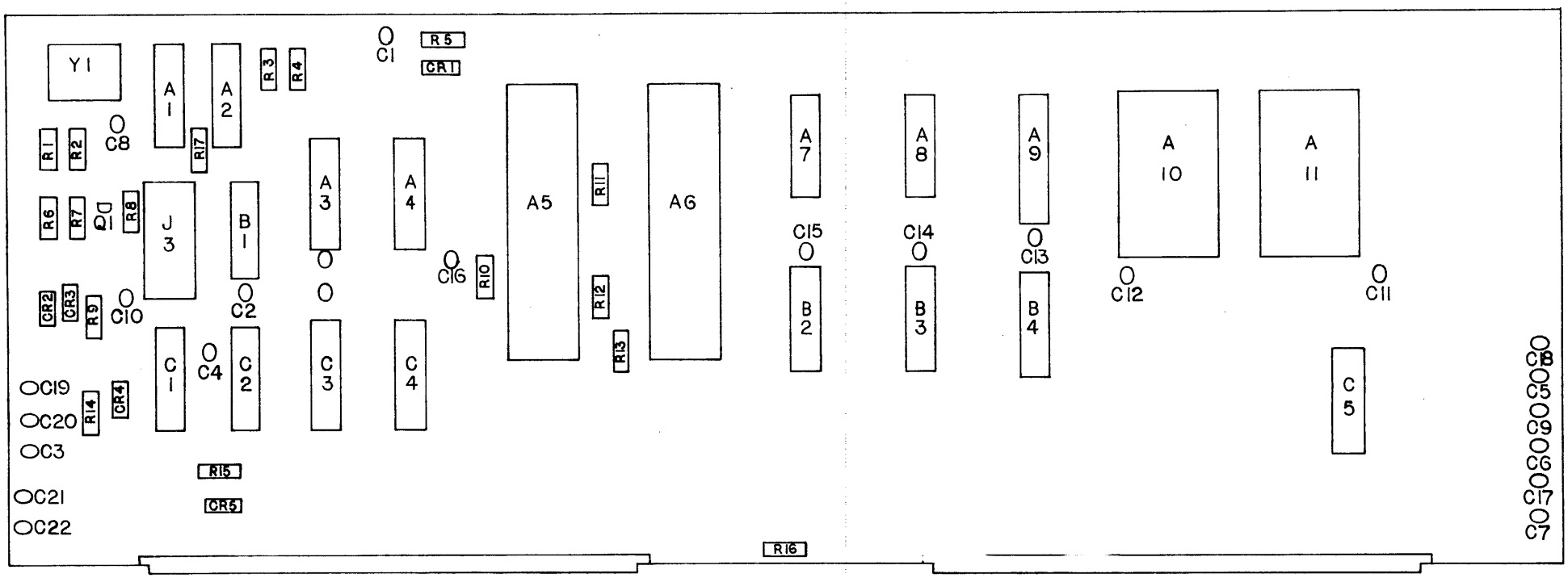

CODE	ERN	DATE	REVISIONS	DATE	NAME
				CHECK	
				DRAWN	D. ANGEL

DOLCH LOGIC INSTRUMENTS

CPU BOARD

PART NUMBER: CPU 4850 ASY

SHEET

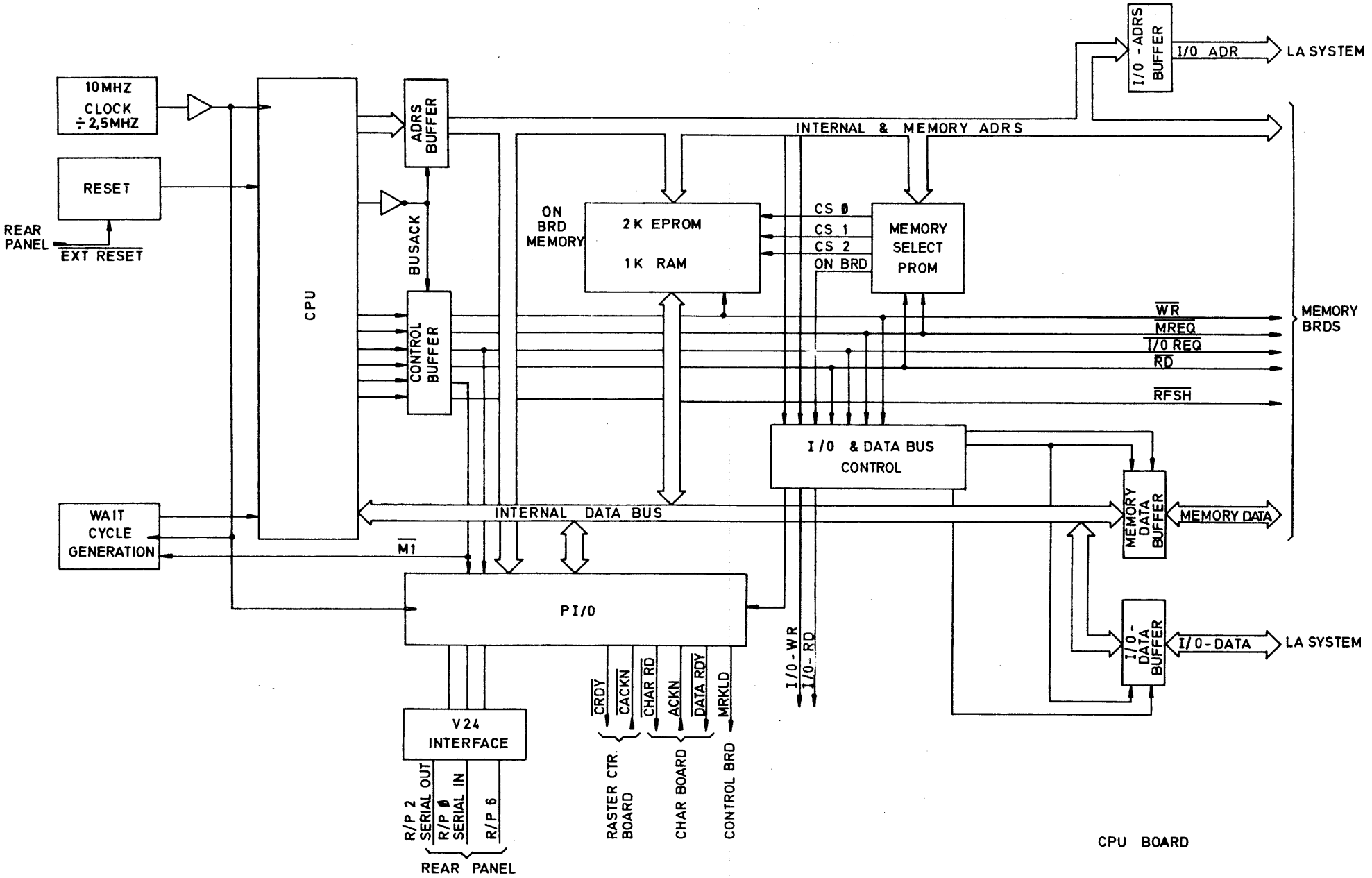
10MHZ
CLOCK
÷2,5MHZ
RESET
REAR
PANEL
EXT RESET
CPU
ADRS
BUFFER
BUSACK
CONTROL
BUFFER
WAIT
CYCLE
GENERATION
M1
ON
BRD
MEMORY
2K EPROM
1K RAM
CS 0
CS 1
CS 2
ON BRD
MEMORY
SELECT
PROM
I/O -ADRS
BUFFER
I/O ADR
LA SYSTEM
INTERNAL & MEMORY ADRS
WR
MREQ
I/O REQ
RD
RFSH
MEMORY
BRDS
I/O & DATA BUS
CONTROL
INTERNAL DATA BUS
MEMORY
DATA
BUFFER
MEMORY DATA
PI/O
I/O-
DATA
BUFFER
I/O-DATA
LA SYSTEM
I/O-WR
I/O-RD
V24
INTERFACE
CRDY
CACKN
CHAR RD
ACKN
DATA RDY
MRKLD
R/P 2
SERIAL OUT
R/P 0
SERIAL IN
R/P 6
REAR PANEL
RASTER CTR.
BOARD
CHAR BOARD
CONTROL BRD
CPU BOARD

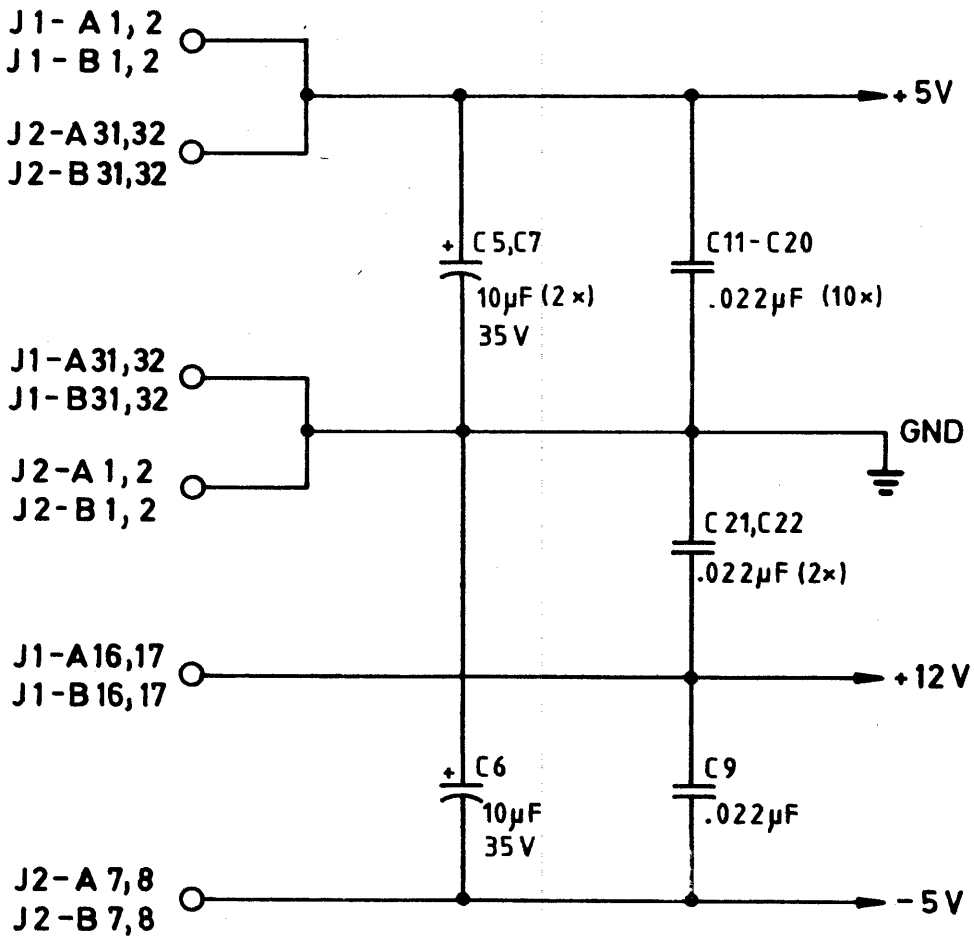
J1- A1, 2
J1 - B1, 2
J2-A31,32
J2-B31,32
+5V
C5,C7
10µF (2×)
35V
C11-C20
.022µF (10×)
J1-A31,32
J1-B31,32
J2-A1, 2
J2-B1, 2
GND
C21,C22
.022µF (2×)
J1-A16,17
J1-B16,17
+12V
C6
10µF
35V
C9
.022µF
J2-A7,8
J2-B7,8
-5V

CPU BOARD

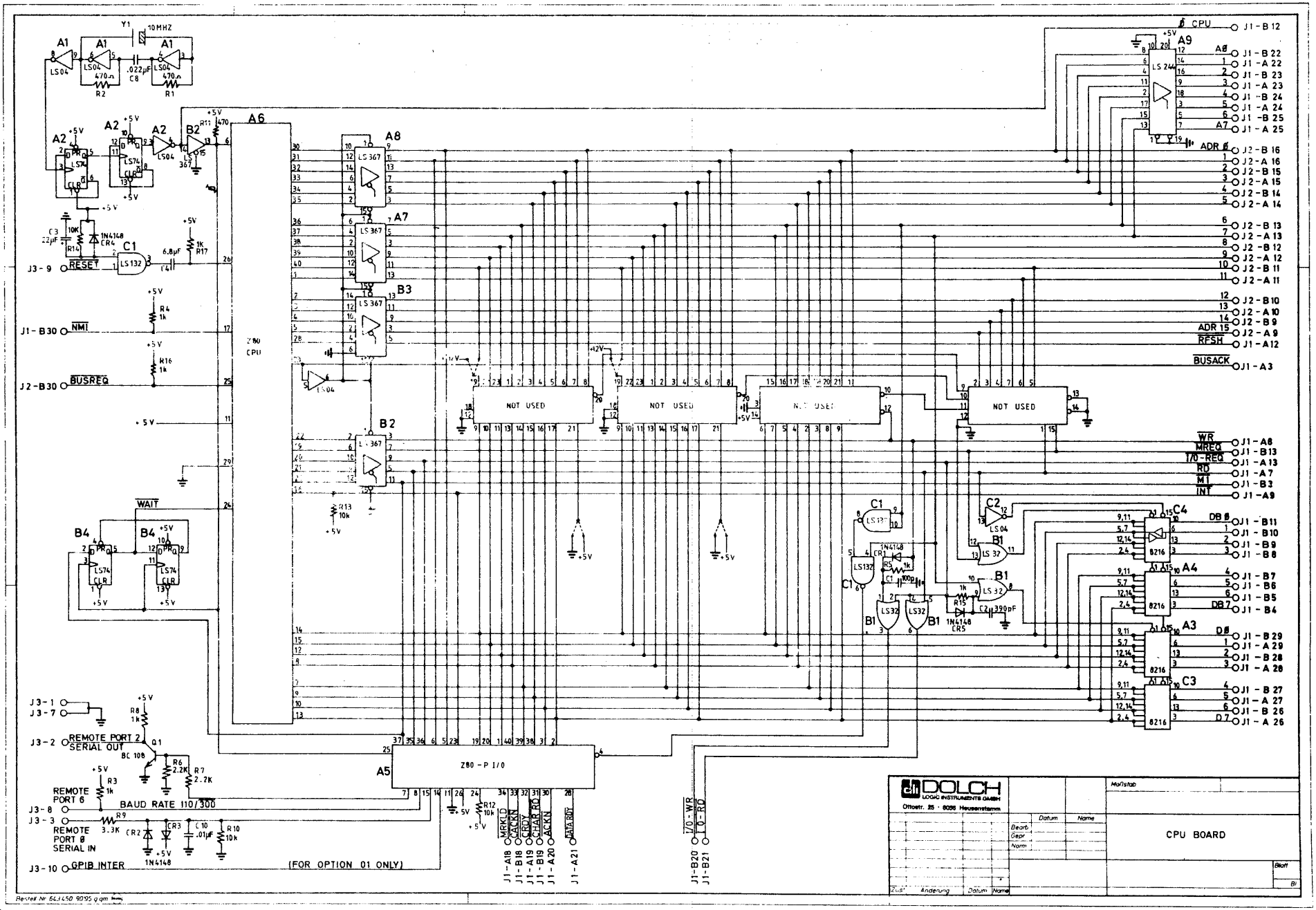

Z80 CPU
Z80 - P I/O
NOT USED
NOT USED
NOT USED
NOT USED
RESET
NMI
BUSREQ
WAIT
REMOTE PORT 2 SERIAL OUT
REMOTE PORT 6
BAUD RATE 110/300
REMOTE PORT Ø SERIAL IN
GPIB INTER
(FOR OPTION 01 ONLY)
Ø CPU
ADR Ø
ADR 15
RFSH
BUSACK
WR
MREQ
I/O-REQ
RD
M1
INT
DB Ø
DB 7
DOLCH
LOGIC INSTRUMENTS GMBH
Ottostr. 25 · 6056 Heusenstamm
CPU BOARD

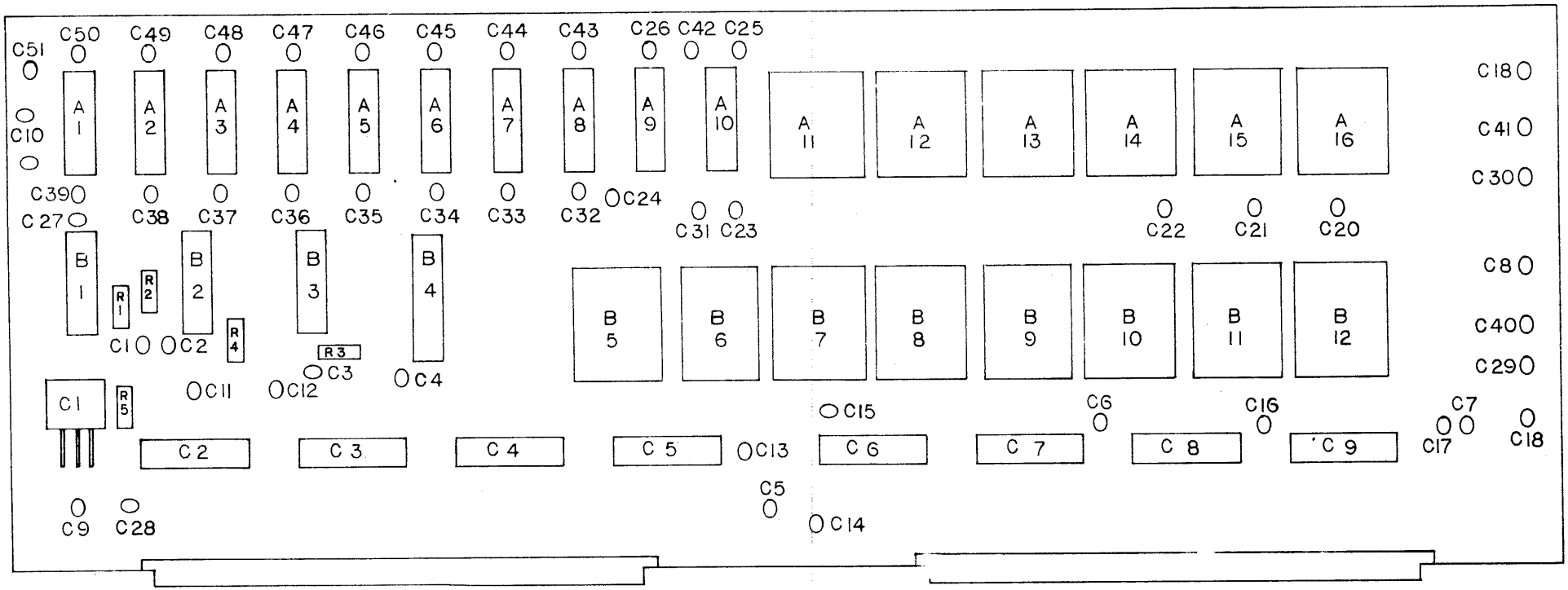

CODE	ERN	DATE	REVISIONS	DATE	NAME
CHECK	DRAWN				

DOLCH LOGIC INSTRUMEN

UP EXT BOARD NO.1

PART NUMBER

MEB 4850 ASY

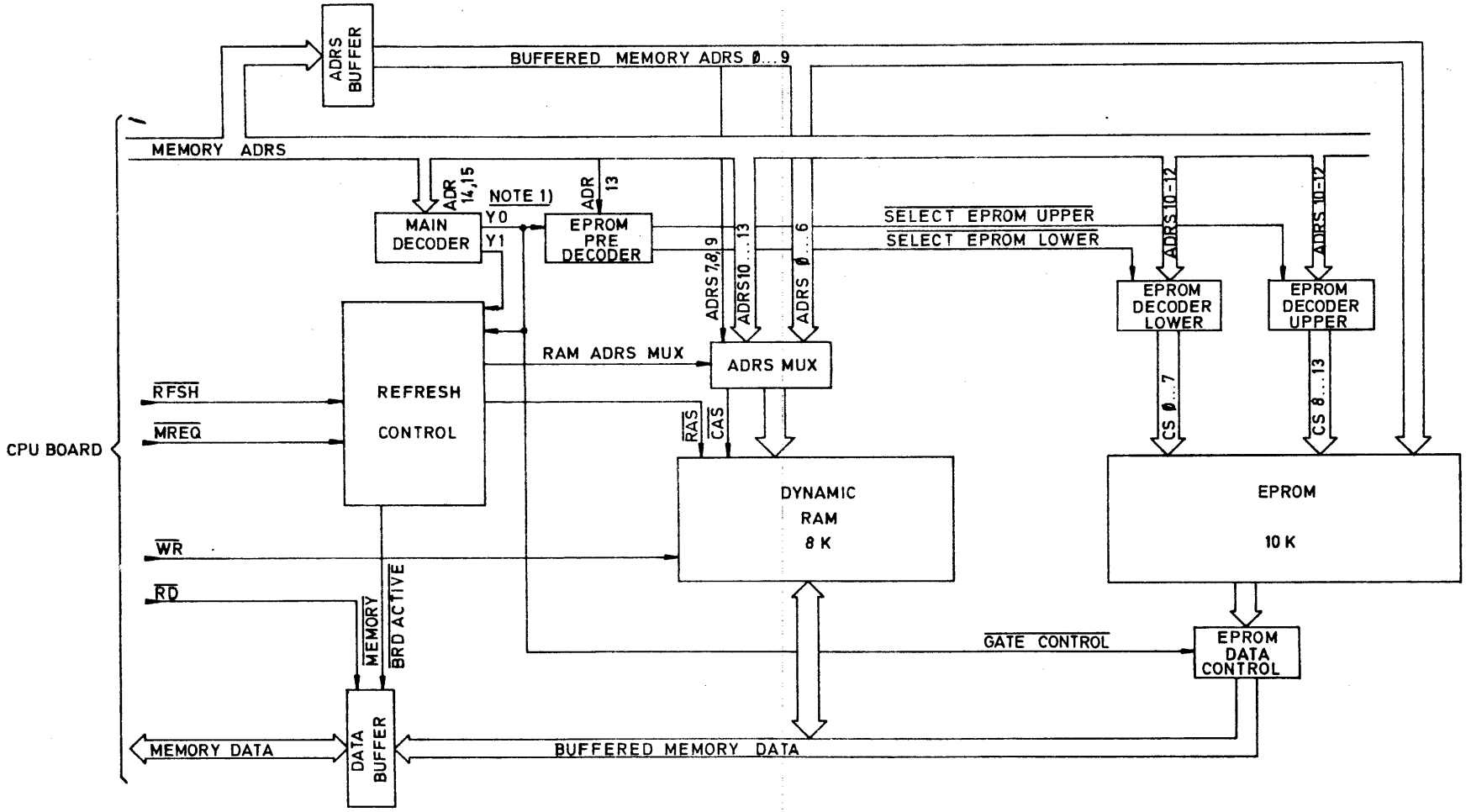

NOTES: 1) WHEN USED AS MEMORY BRD 2 :

Y 0 → Y 2
Y 1 → Y 3
} CHANGES IN MAIN DECODER OUTPUT WIRING

MEMORY BOARD

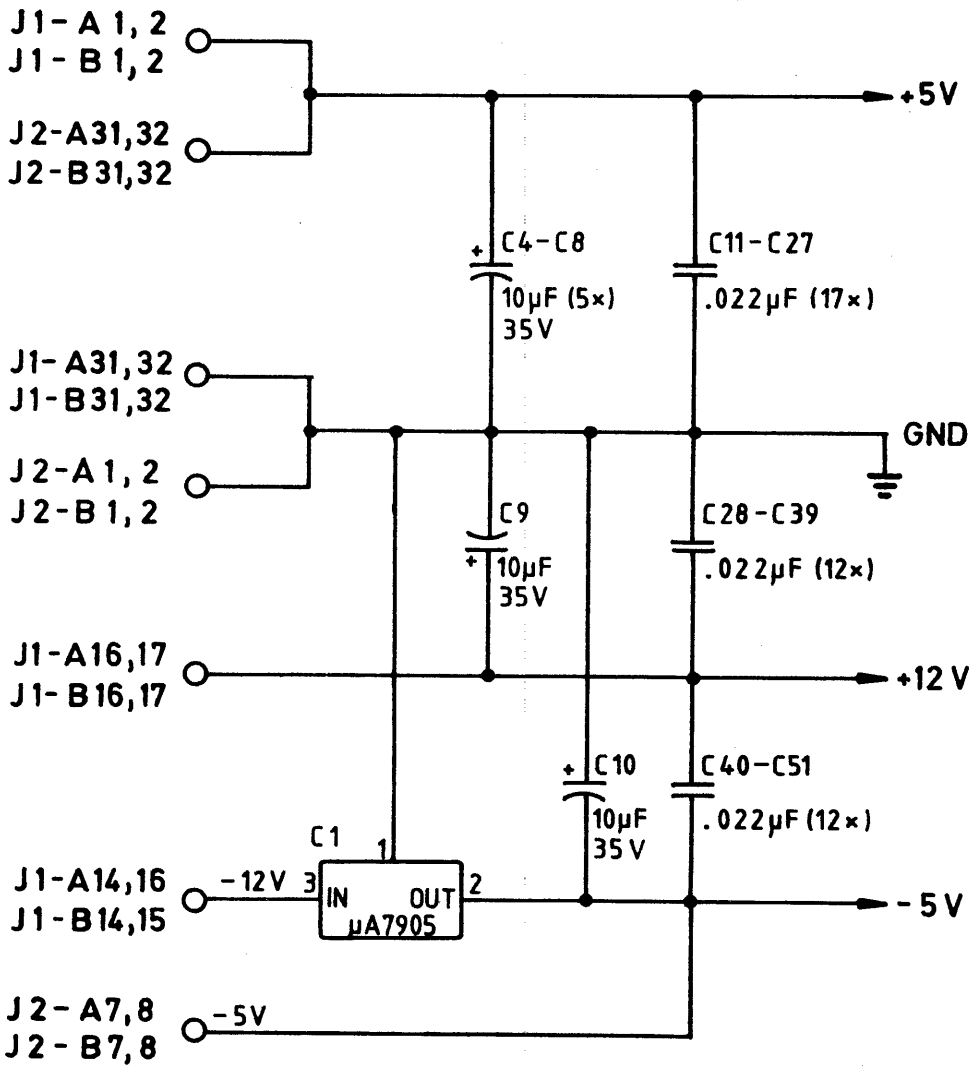

MEMORY BOARD 1

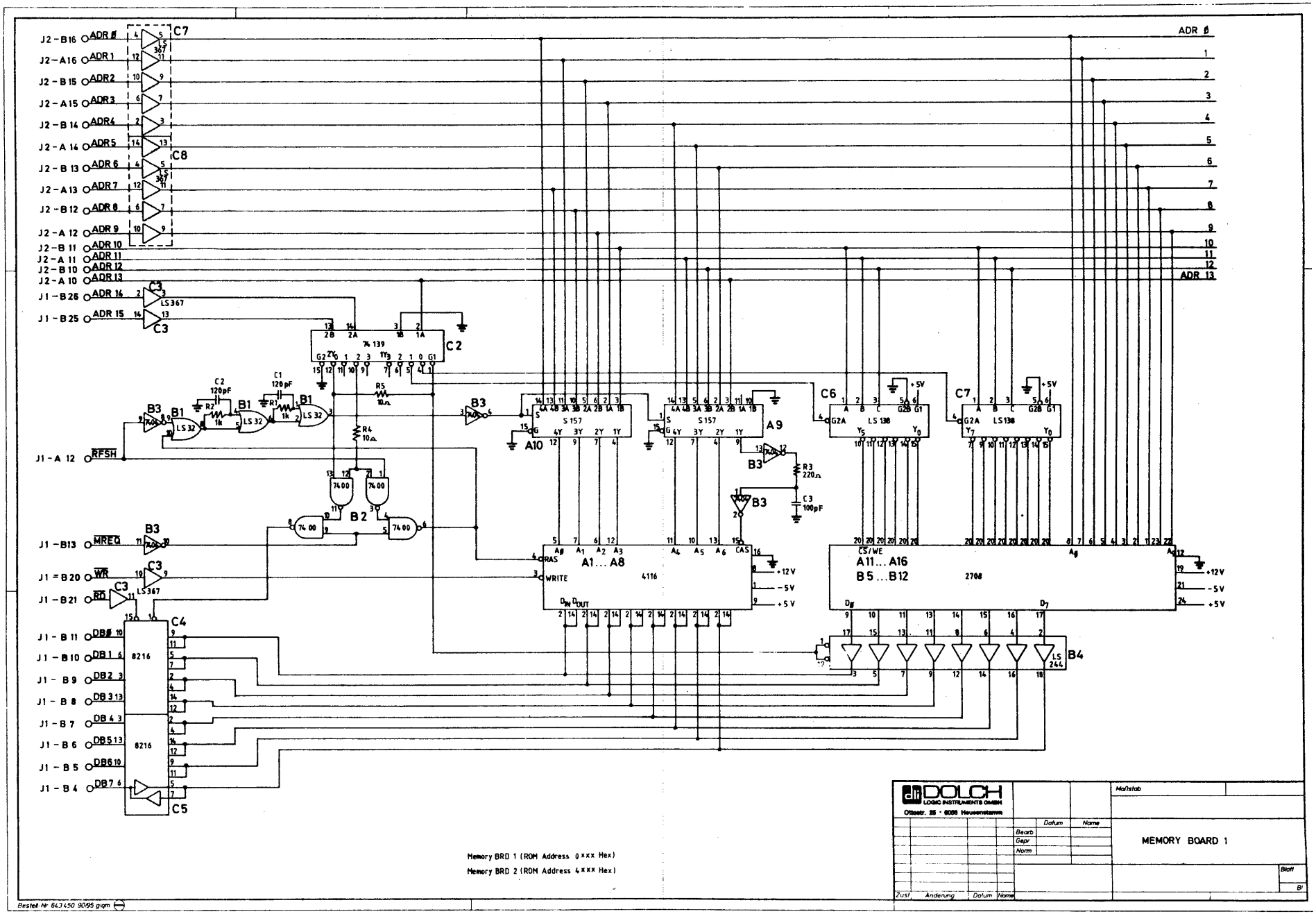

J2-B16 ADR Ø
J2-A16 ADR 1
J2-B15 ADR2
J2-A15 ADR3
J2-B14 ADR4
J2-A14 ADR5
J2-B13 ADR6
J2-A13 ADR7
J2-B12 ADR8
J2-A12 ADR9
J2-B11 ADR10
J2-A11 ADR11
J2-B10 ADR12
J2-A10 ADR13
J1-B26 ADR14
J1-B25 ADR15
J1-A12 RFSH
J1-B13 MREQ
J1-B20 WR
J1-B21 RD
J1-B11 DBØ
J1-B10 DB1
J1-B9 DB2
J1-B8 DB3
J1-B7 DB4
J1-B6 DB5
J1-B5 DB6
J1-B4 DB7
C7
C8
C3
C2
C4
C5
C6
C7
B1
B2
B3
B4
A9
A10
74 139
S 157
LS 138
LS 367
LS 32
74 00
8216
4116
2708
A1...A8
A11...A16
B5...B12
RAS
WRITE
CAS
CS/WE
+12V
-5V
+5V
ADR Ø
ADR 13
Memory BRD 1 (ROM Address 0xxx Hex)
Memory BRD 2 (ROM Address 4xxx Hex)
DOLCH
LOGIC INSTRUMENTS GMBH
Ottostr. 25 · 6058 Heusenstamm
Maßstab
Datum
Name
Bearb
Gepr
Norm
MEMORY BOARD 1
Blatt
Bl
Zust
Änderung
Datum
Name
Bestell-Nr 643450 90/95 gigm

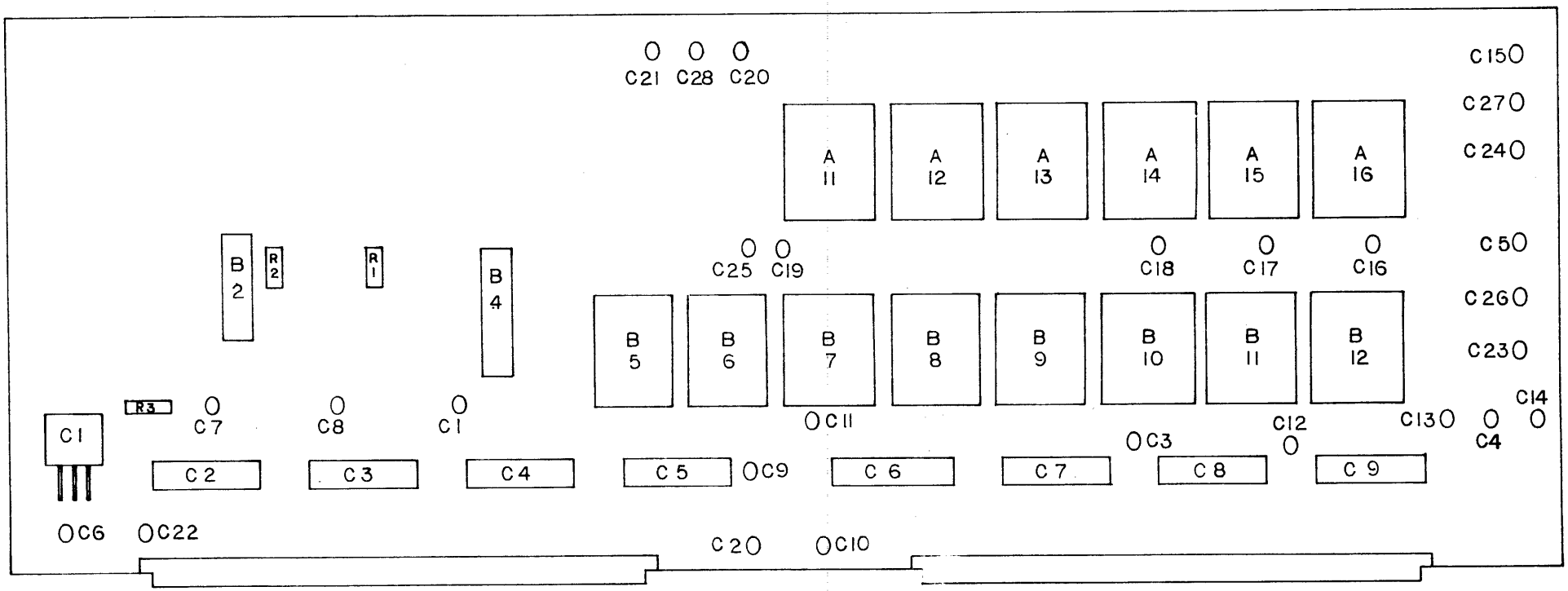

CODE	ERN	DATE	REVISIONS	NAME	B.ANGEL
				DATE	
				CHECK	
				DRAWN	

DOLCH LOGIC INSTRUMENTS

µP EXT BOARD NO.2

PART NUMBER

MEB 4850 ASY

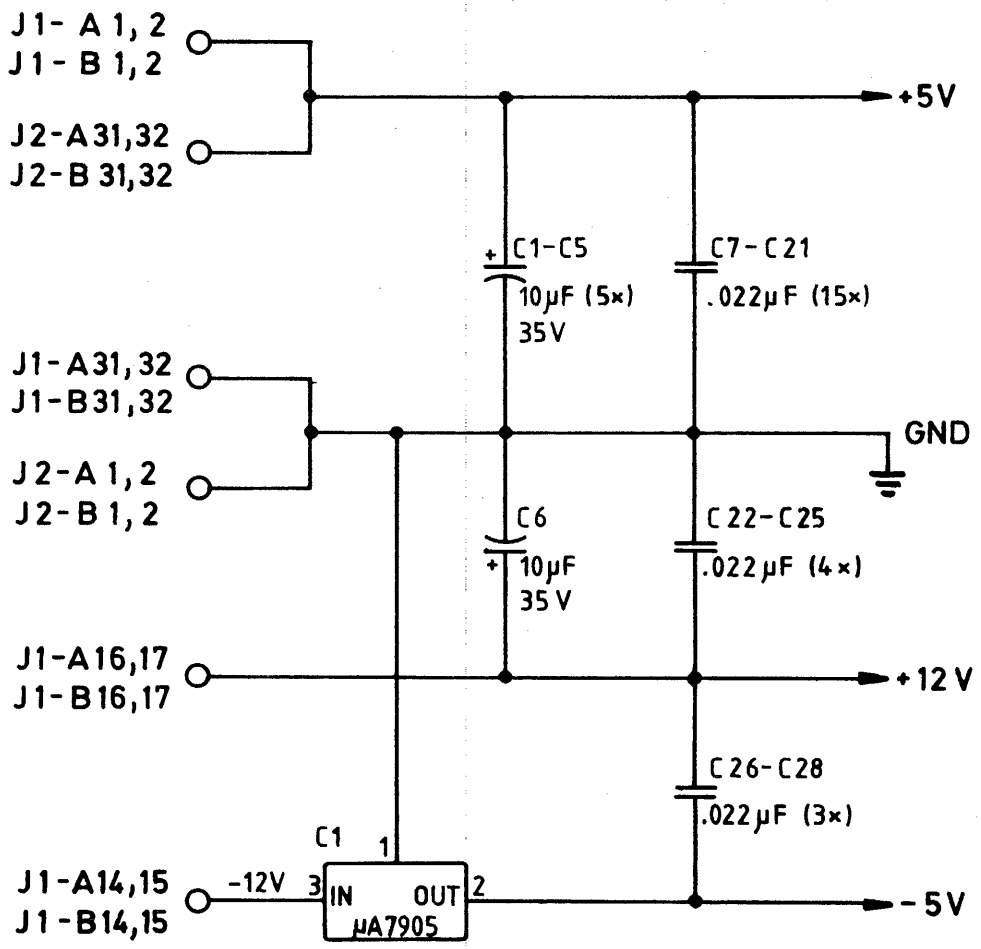

MEMORY BOARD 2

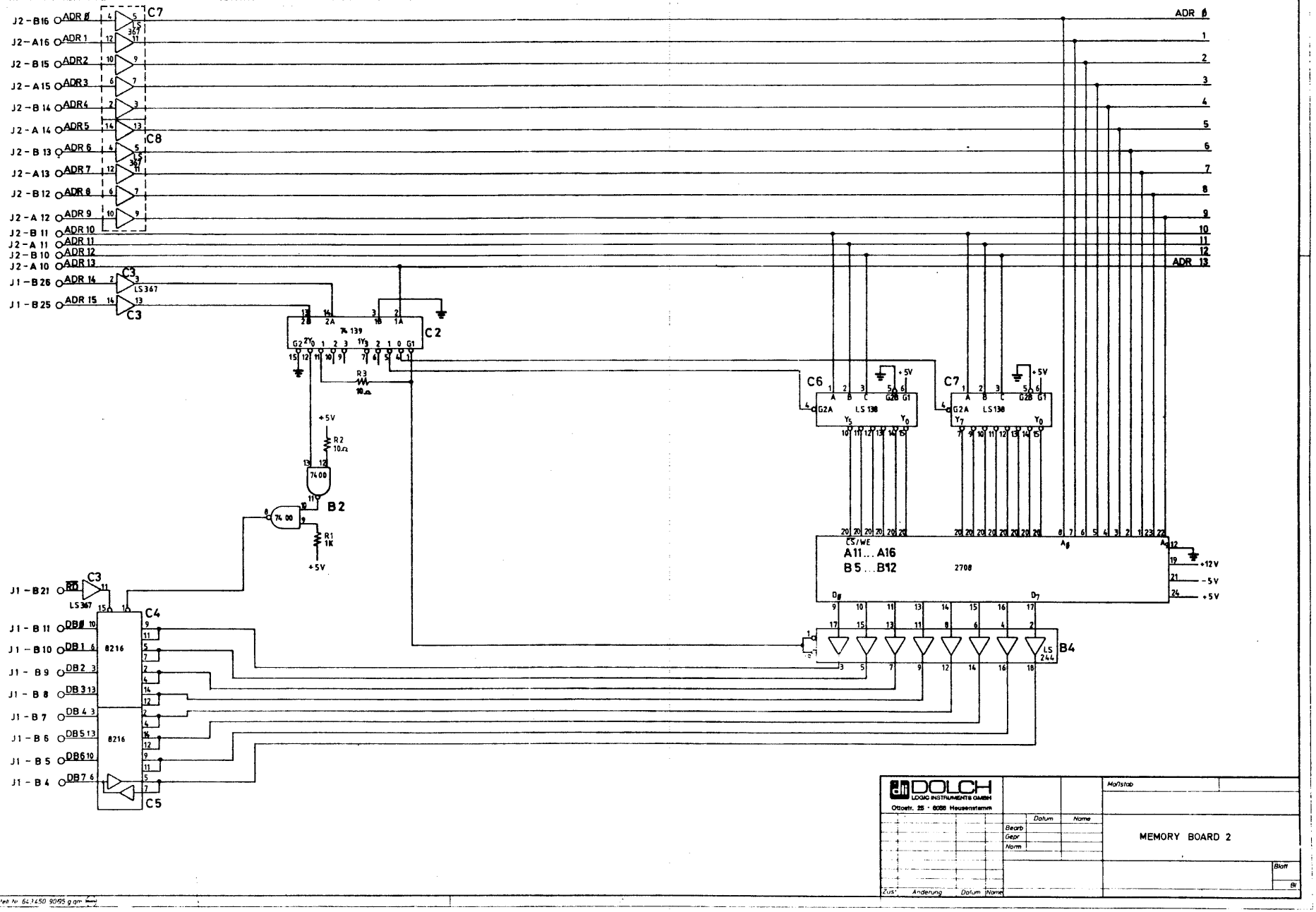
J2-B16 ADR 0
J2-A16 ADR 1
J2-B15 ADR2
J2-A15 ADR3
J2-B14 ADR4
J2-A14 ADR5
J2-B13 ADR 6
J2-A13 ADR 7
J2-B12 ADR 8
J2-A12 ADR 9
J2-B11 ADR 10
J2-A11 ADR 11
J2-B10 ADR 12
J2-A10 ADR 13
J1-B26 ADR 14
J1-B25 ADR 15
C7
C8
C3
LS 367
74 139
C2
R3
10Ω
+5V
R2
10Ω
7400
B2
74 00
R1
1K
C6
C7
G2A LS 138
CS/WE
A11 ... A16
B5 ... B12
2708
+12V
-5V
+5V
J1-B21
J1-B11 DB0
J1-B10 DB1
J1-B9 DB2
J1-B8 DB3
J1-B7 DB4
J1-B6 DB5
J1-B5 DB6
J1-B4 DB7
C4
8216
C5
B4
LS 244
ADR 0
1
2
3
4
5
6
7
8
9
10
11
12
ADR 13
DOLCH
LOGIC INSTRUMENTS GMBH
Otostr. 25 · 8000 Heusenstamm
Maßstab
Datum
Name
Bearb
Gepr
Norm
MEMORY BOARD 2
Blatt
Zust. Änderung Datum Name

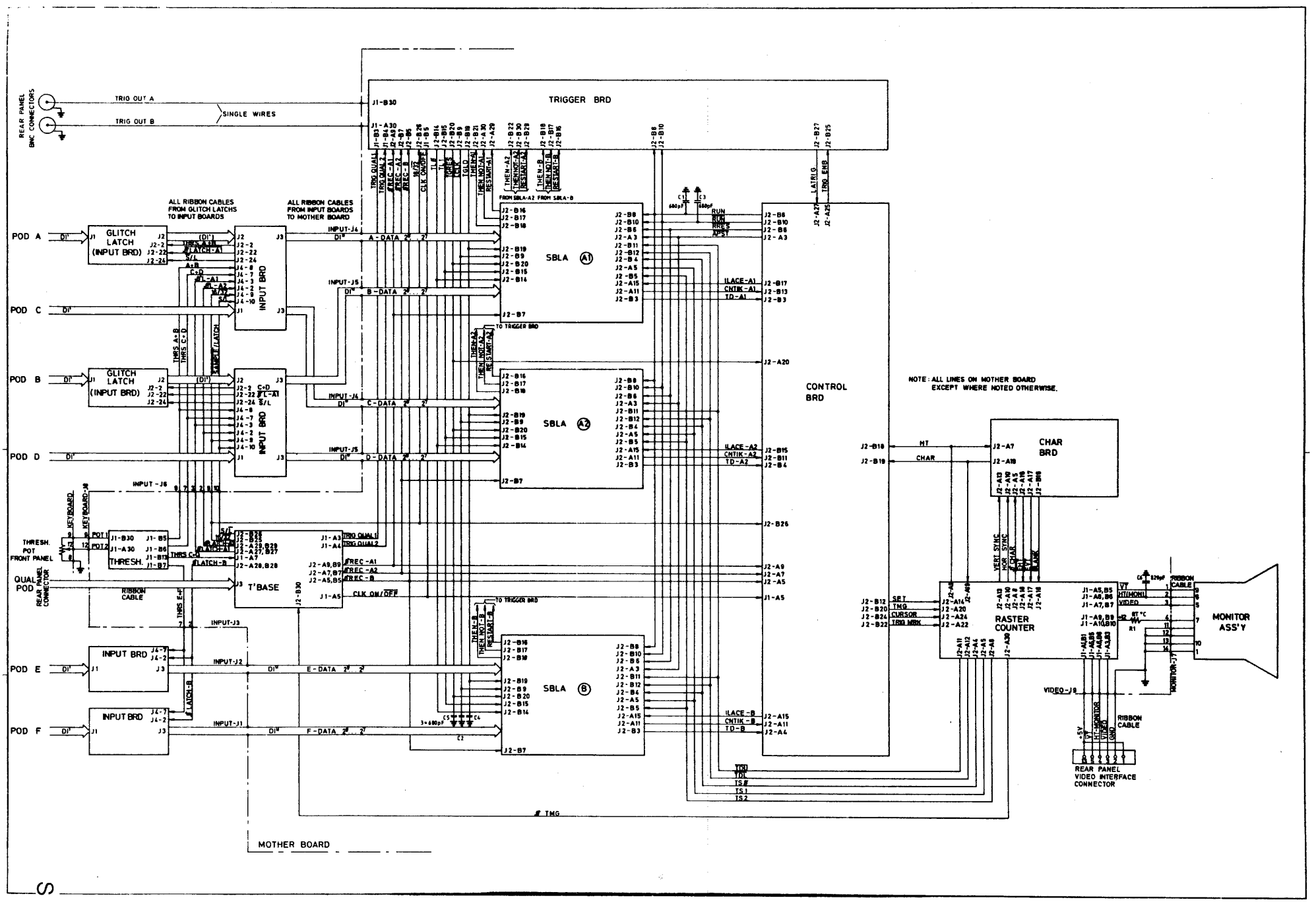
REAR PANEL BNC CONNECTORS
TRIG OUT A
TRIG OUT B
SINGLE WIRES
TRIGGER BRD
ALL RIBBON CABLES FROM GLITCH LATCHS TO INPUT BOARDS
ALL RIBBON CABLES FROM INPUT BOARDS TO MOTHER BOARD
POD A
POD B
POD C
POD D
POD E
POD F
GLITCH LATCH (INPUT BRD)
INPUT BRD
SBLA A1
SBLA A2
SBLA B
CONTROL BRD
CHAR BRD
RASTER COUNTER
MONITOR ASS'Y
THRESH. POT FRONT PANEL
THRESH.
QUAL POD
REAR PANEL CONNECTOR
RIBBON CABLE
T'BASE
KEYBOARD
KEYBOARD-J8
INPUT-J1
INPUT-J2
INPUT-J3
INPUT-J4
INPUT-J5
INPUT-J6
A-DATA
B-DATA
C-DATA
D-DATA
E-DATA
F-DATA
CLK ON/OFF
TRIG QUAL 1
TRIG QUAL 2
TO TRIGGER BRD
FROM SBLA-A2 FROM SBLA-B
MOTHER BOARD
NOTE: ALL LINES ON MOTHER BOARD EXCEPT WHERE NOTED OTHERWISE.
REAR PANEL VIDEO INTERFACE CONNECTOR
VIDEO-J9
MONITOR-J7

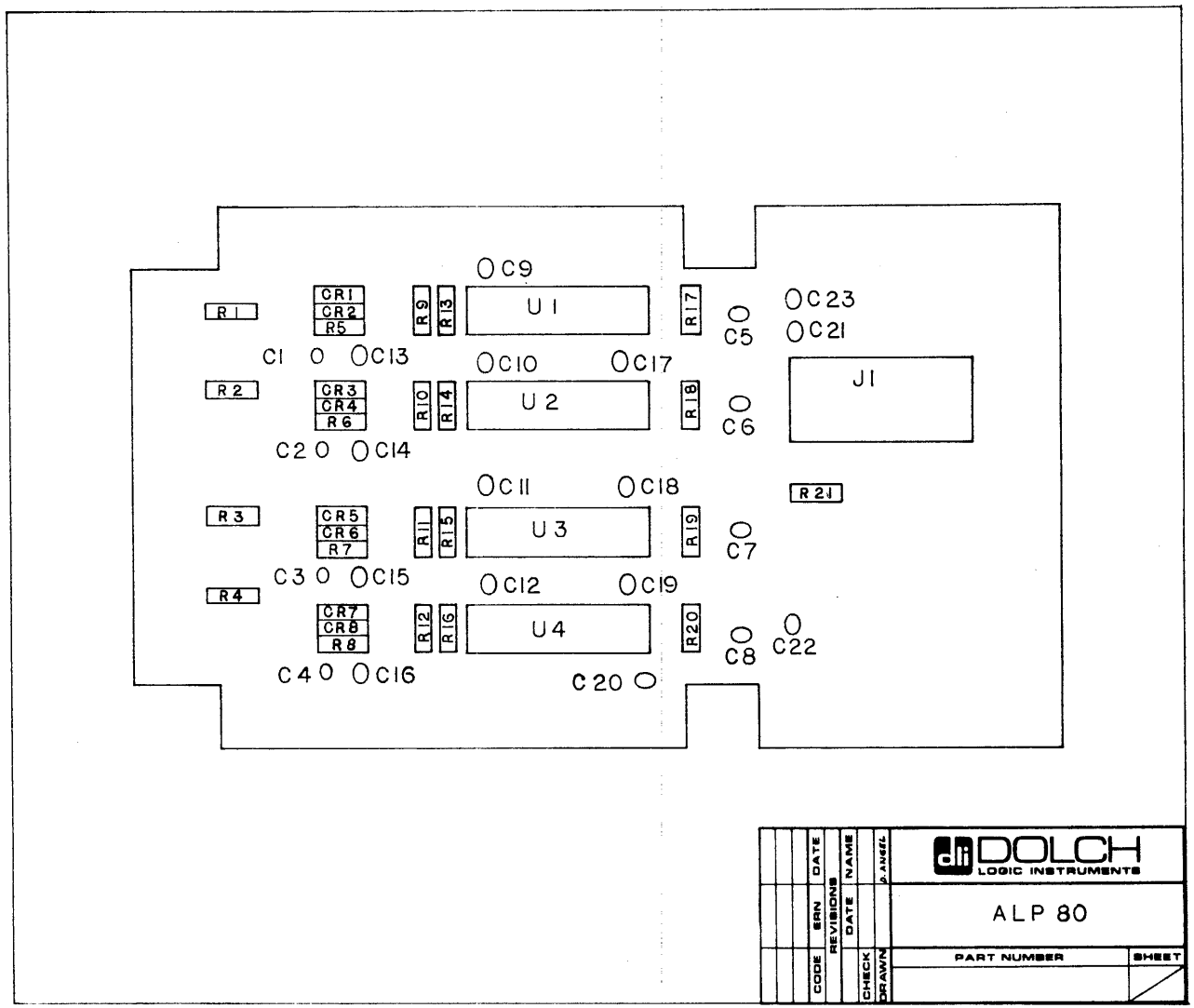
C9
CR1
CR2
R5
R9
R13
U1
R17
C23
C5
C21
R1
C1
C13
C10
C17
J1
R2
CR3
CR4
R6
R10
R14
U2
R18
C6
C2
C14
C11
C18
R21
R3
CR5
CR6
R7
R11
R15
U3
R19
C7
C3
C15
C12
C19
R4
CR7
CR8
R8
R12
R16
U4
R20
C8
C22
C4
C16
C20
DOLCH
LOGIC INSTRUMENTS
ALP 80
PART NUMBER
SHEET
CODE
ERN
DATE
REVISIONS
DATE
NAME
CHECK
DRAWN
D. ANGEL

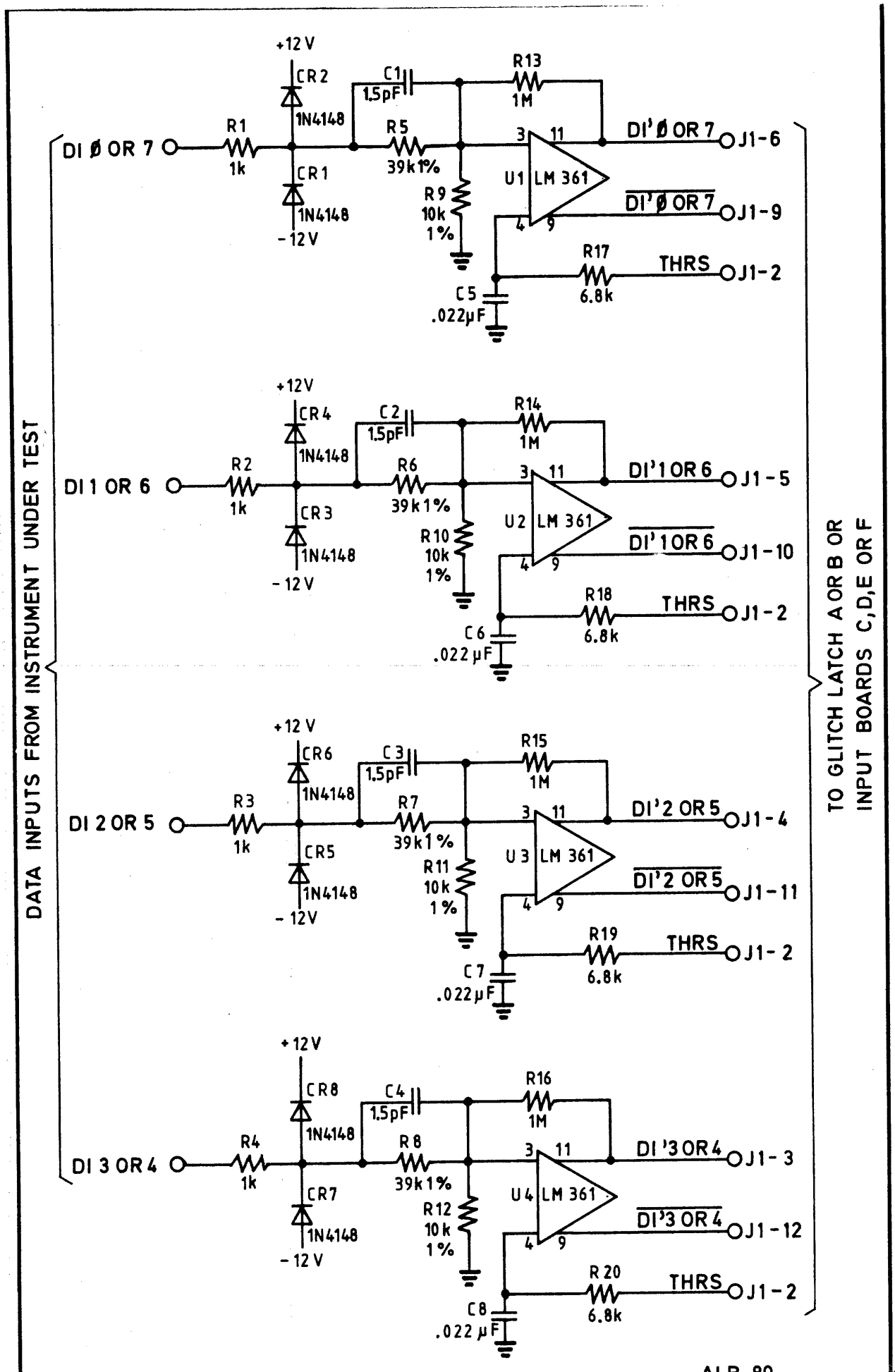

ALP 80

Bestell-Nr 643 315 80185 glqm

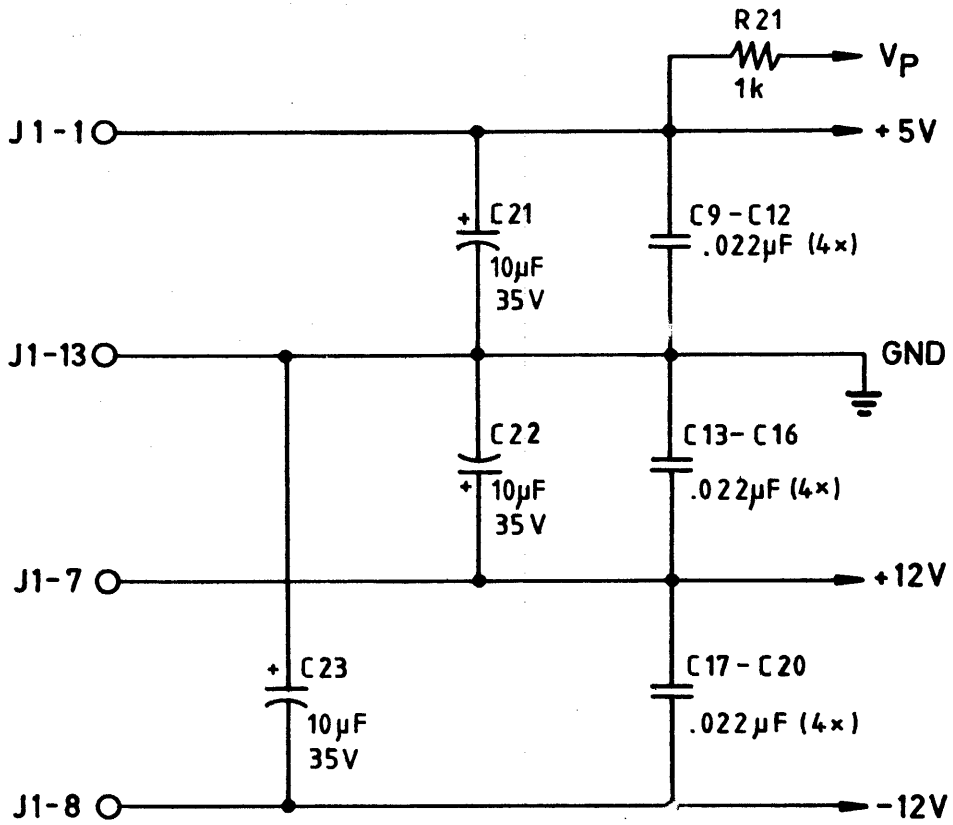
R21
1k
V_P
J1-1
+5V
C21
10µF
35V
C9-C12
.022µF (4×)
J1-13
GND
C22
10µF
35V
C13-C16
.022µF (4×)
J1-7
+12V
C23
10µF
35V
C17-C20
.022µF (4×)
J1-8
-12V

ALP 80

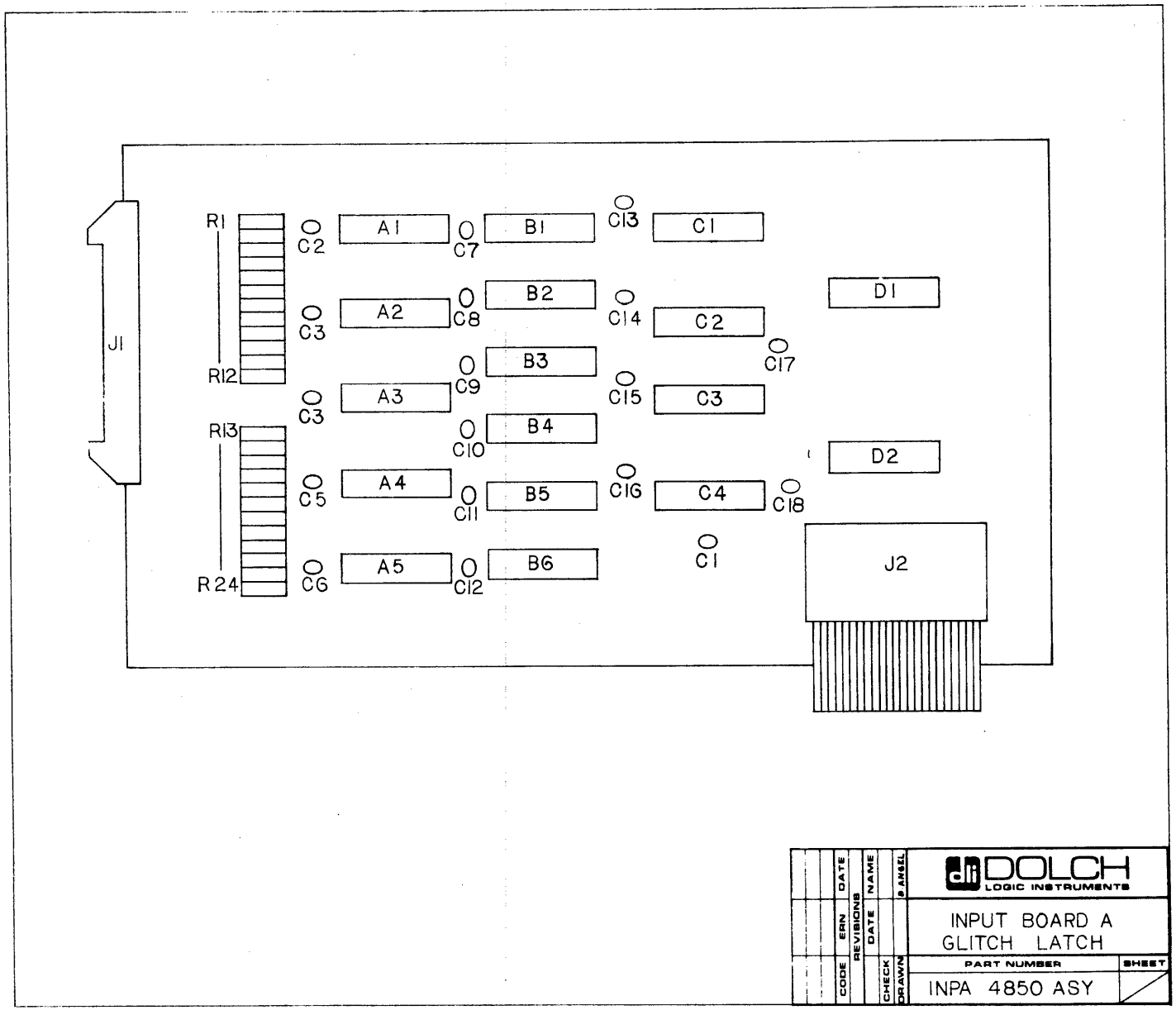
J1
R1
R12
R13
R24
C2
C3
C3
C5
C6
A1
A2
A3
A4
A5
C7
C8
C9
C10
C11
C12
B1
B2
B3
B4
B5
B6
C13
C14
C15
C16
C1
C1
C2
C3
C4
D1
D2
C17
C18
J2
DOLCH
LOGIC INSTRUMENTS
INPUT BOARD A
GLITCH LATCH
PART NUMBER
INPA 4850 ASY
SHEET
CODE
ERN
DATE
REVISIONS
NAME
DATE
CHECK
DRAWN
APPROVED

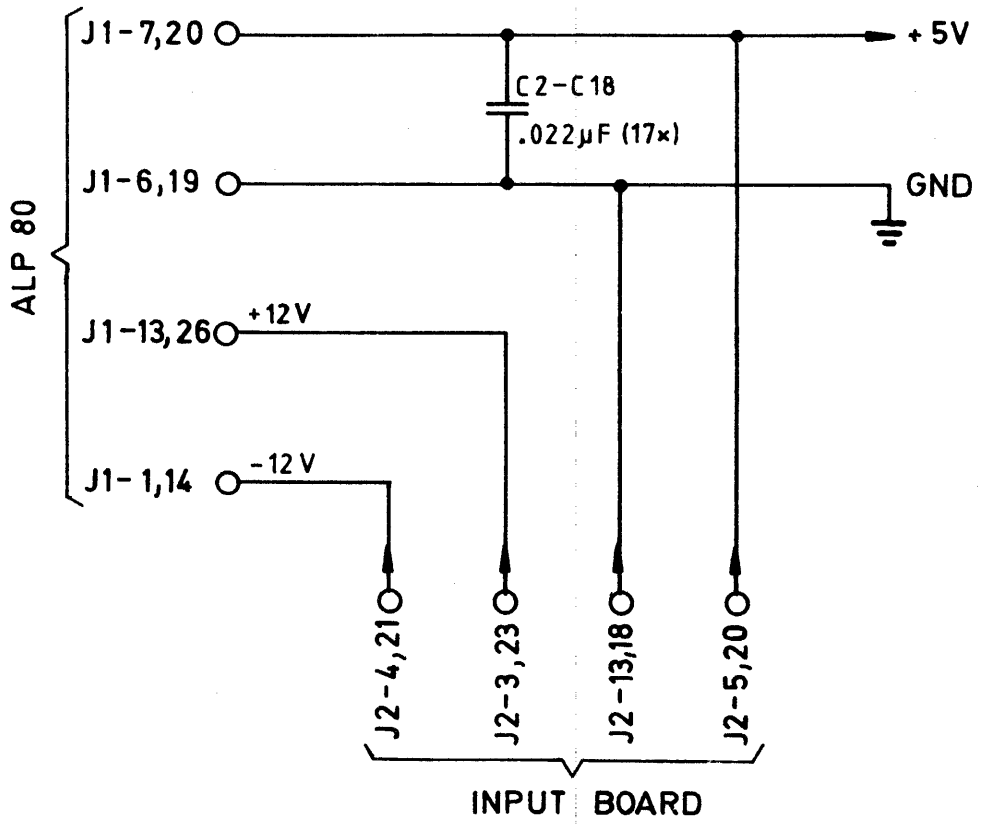

GLITCH LATCH INPUT BOARD

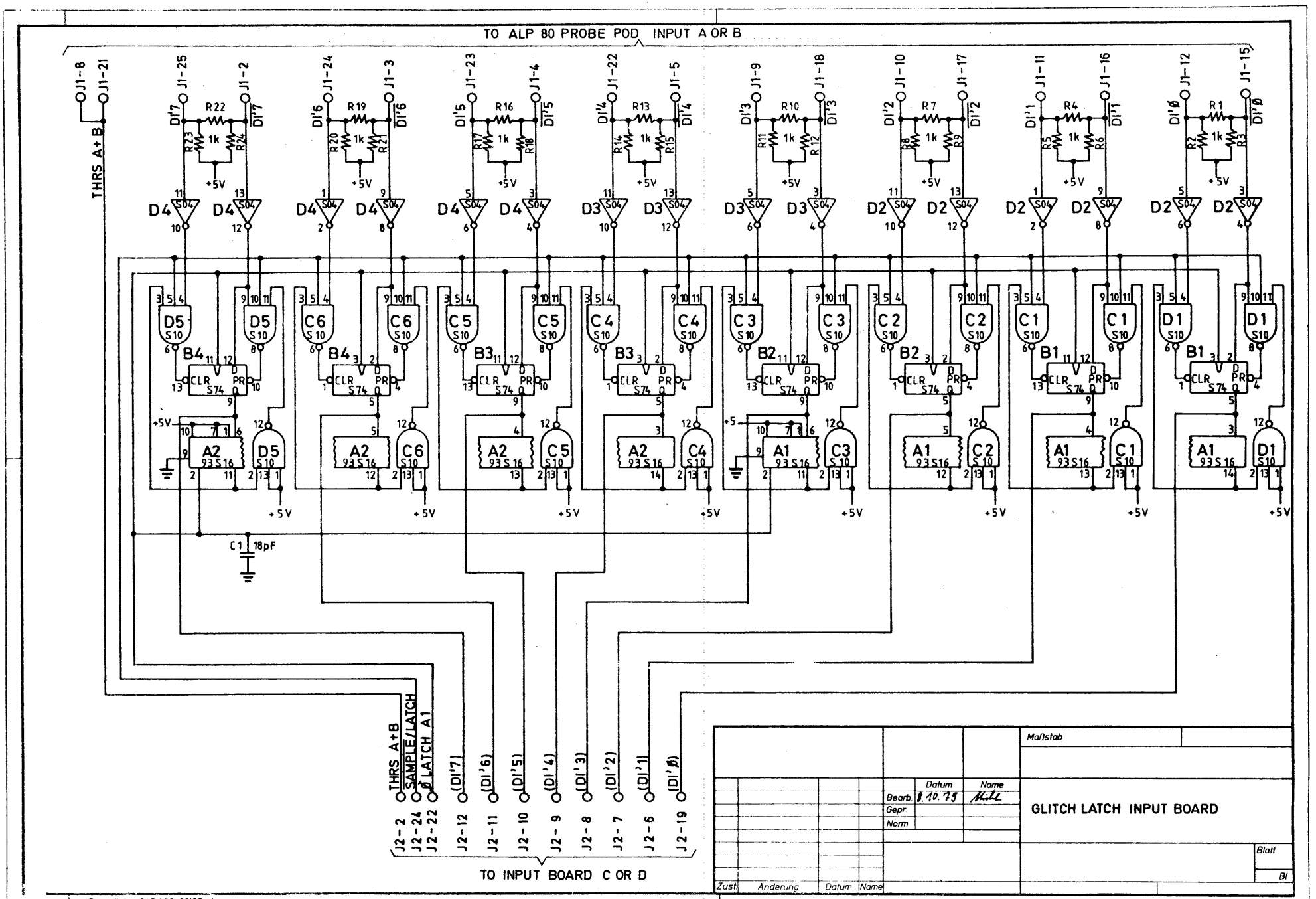
TO ALP 80 PROBE POD INPUT A OR B
THRS A+B
J1-8
J1-21
J1-25
J1-2
J1-24
J1-3
J1-23
J1-4
J1-22
J1-5
J1-9
J1-18
J1-10
J1-17
J1-11
J1-16
J1-12
J1-15
R22
R19
R16
R13
R10
R7
R4
R1
1k
+5V
D4
D3
D2
D5
C6
C5
C4
C3
C2
C1
D1
B4
B3
B2
B1
A2
A1
93S16
S04
S10
S74
C1 18pF
THRS A+B
SAMPLE/LATCH
LATCH A1
(DI'7)
(DI'6)
(DI'5)
(DI'4)
(DI'3)
(DI'2)
(DI'1)
(DI'0)
J2-2
J2-24
J2-22
J2-12
J2-11
J2-10
J2-9
J2-8
J2-7
J2-6
J2-19
TO INPUT BOARD C OR D
Maßstab
Datum
Name
Bearb
8.10.79
Gepr
Norm
GLITCH LATCH INPUT BOARD
Blatt
Bl
Zust.
Änderung
Datum
Name
Bestell-Nr 643 430 90195 glqm
156

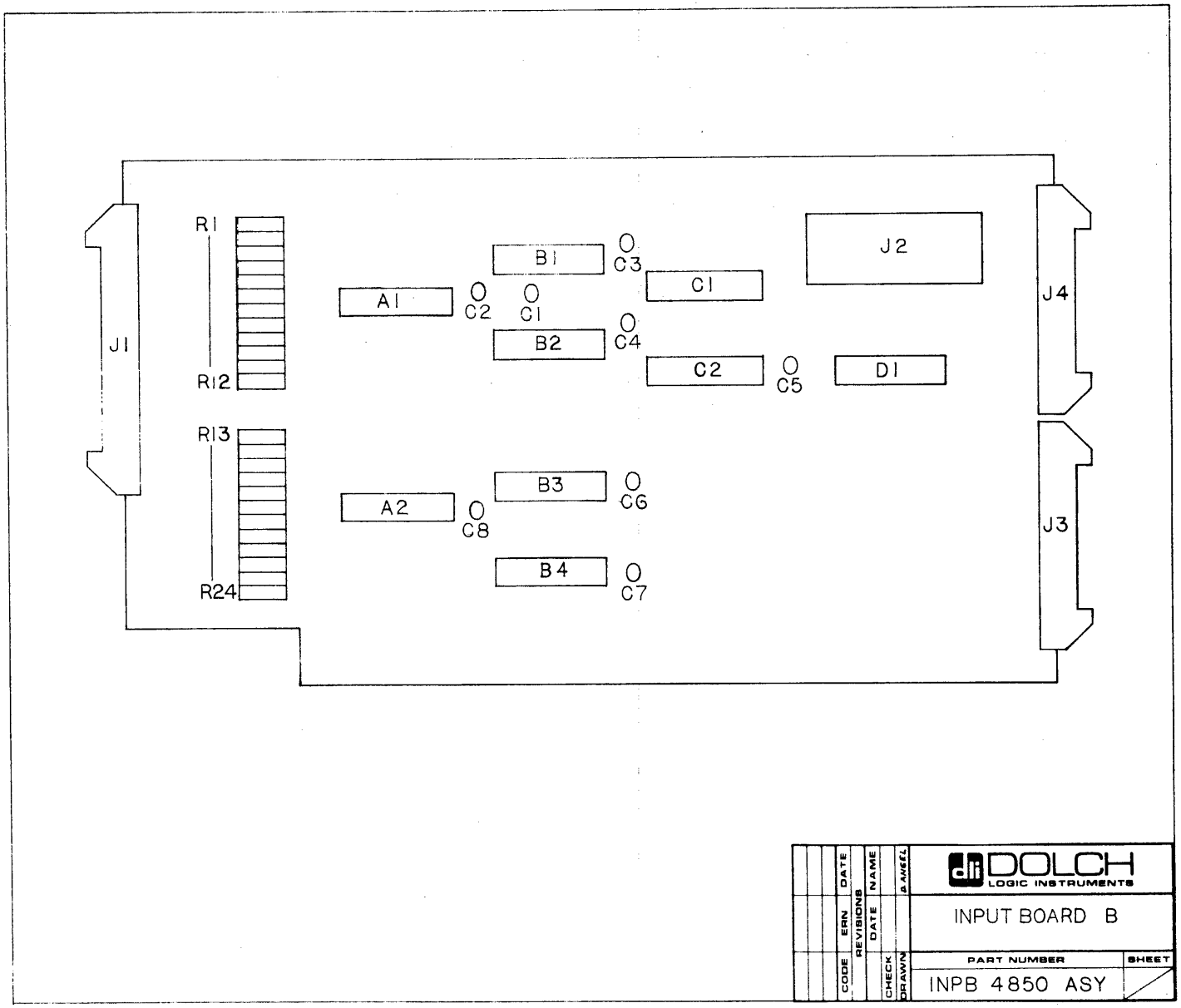
R1
R12
R13
R24
J1
J2
J3
J4
A1
A2
B1
B2
B3
B4
C1
C2
C3
C4
C5
C6
C7
C8
D1
DOLCH
LOGIC INSTRUMENTS
INPUT BOARD B
PART NUMBER
INPB 4850 ASY
SHEET
CODE
ERN
REVISIONS
DATE
NAME
CHECK
DRAWN
ANGEL

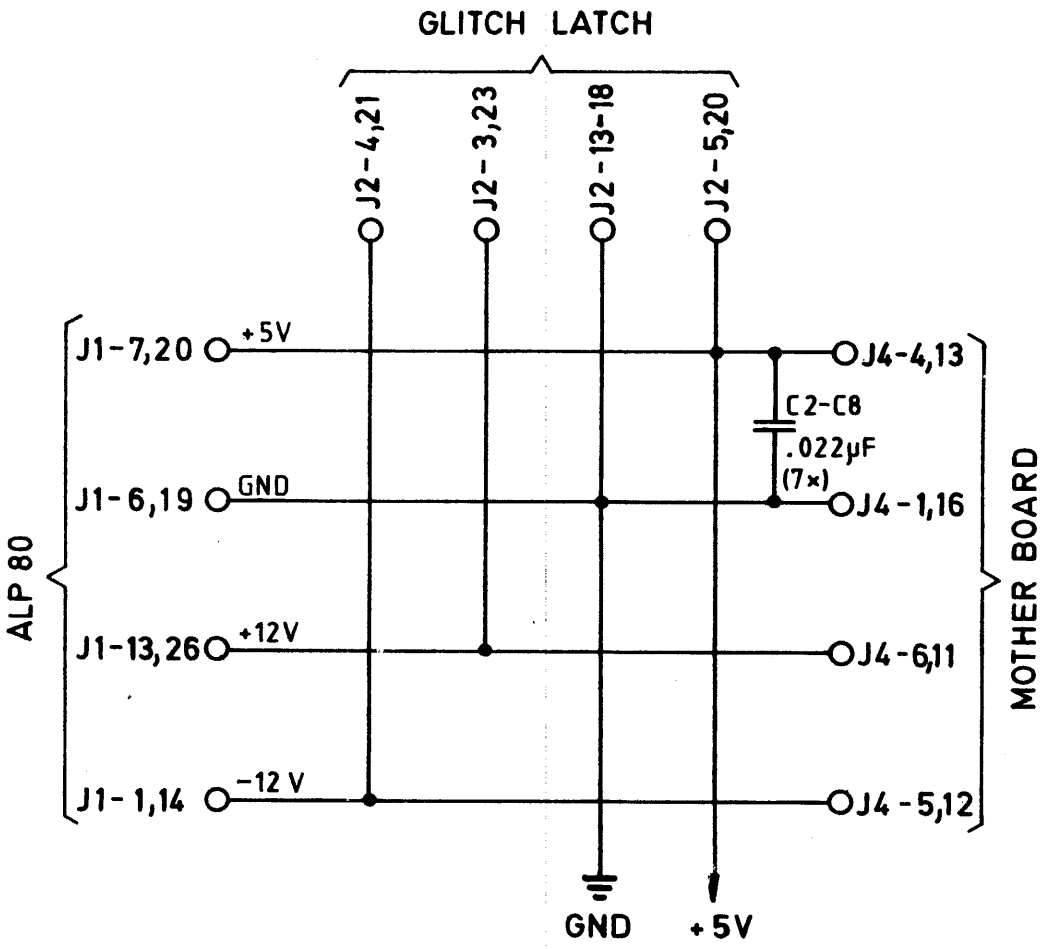
GLITCH LATCH
J2-4,21
J2-3,23
J2-13-18
J2-5,20
J1-7,20
+5V
J4-4,13
C2-C8
.022μF
(7×)
J1-6,19
GND
J4-1,16
J1-13,26
+12V
J4-6,11
J1-1,14
-12 V
J4-5,12
ALP 80
MOTHER BOARD
GND
+5V

INPUT BOARD

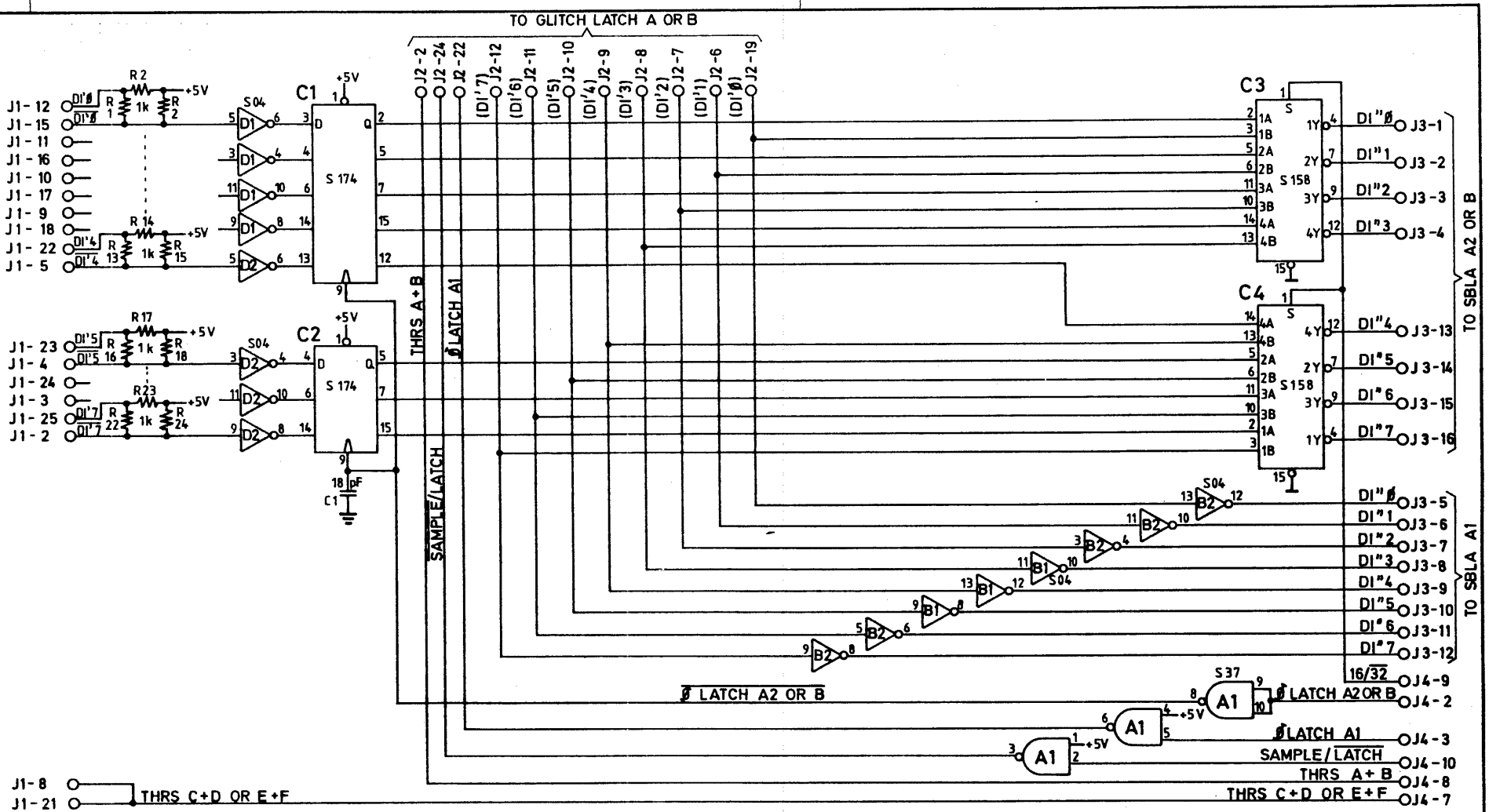

						Maßstab	
				Datum	Name		
				Bearb.	8.10.79	INPUT BOARD	
				Gepr.			
				Norm			
							Blatt
Zust	Änderung	Datum	Name				Bl.

Bestell-Nr. 643.430 90195 glqm

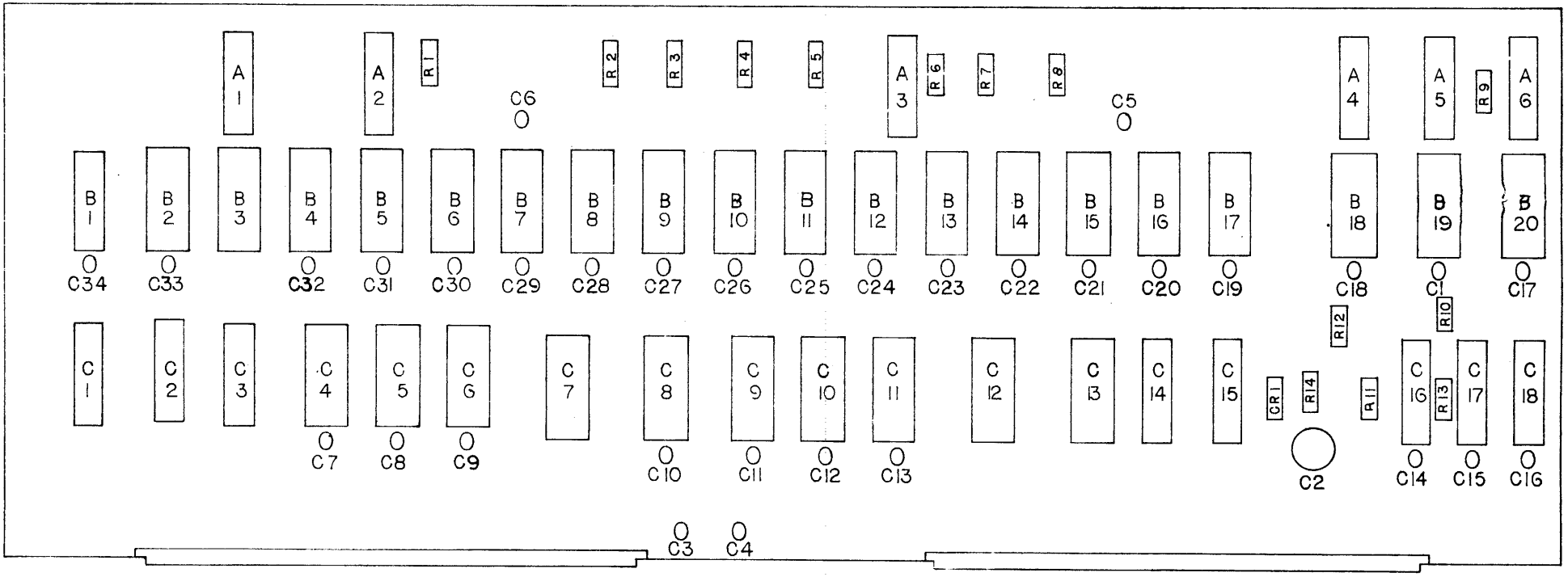

CODE	ERN	DATE			
	REVISIONS	NAME			
		DATE			
CHECK					
DRAWN					

DOLCH LOGIC INSTRUMENTS

SBLA

PART NUMBER

SBLA 4850 ASY

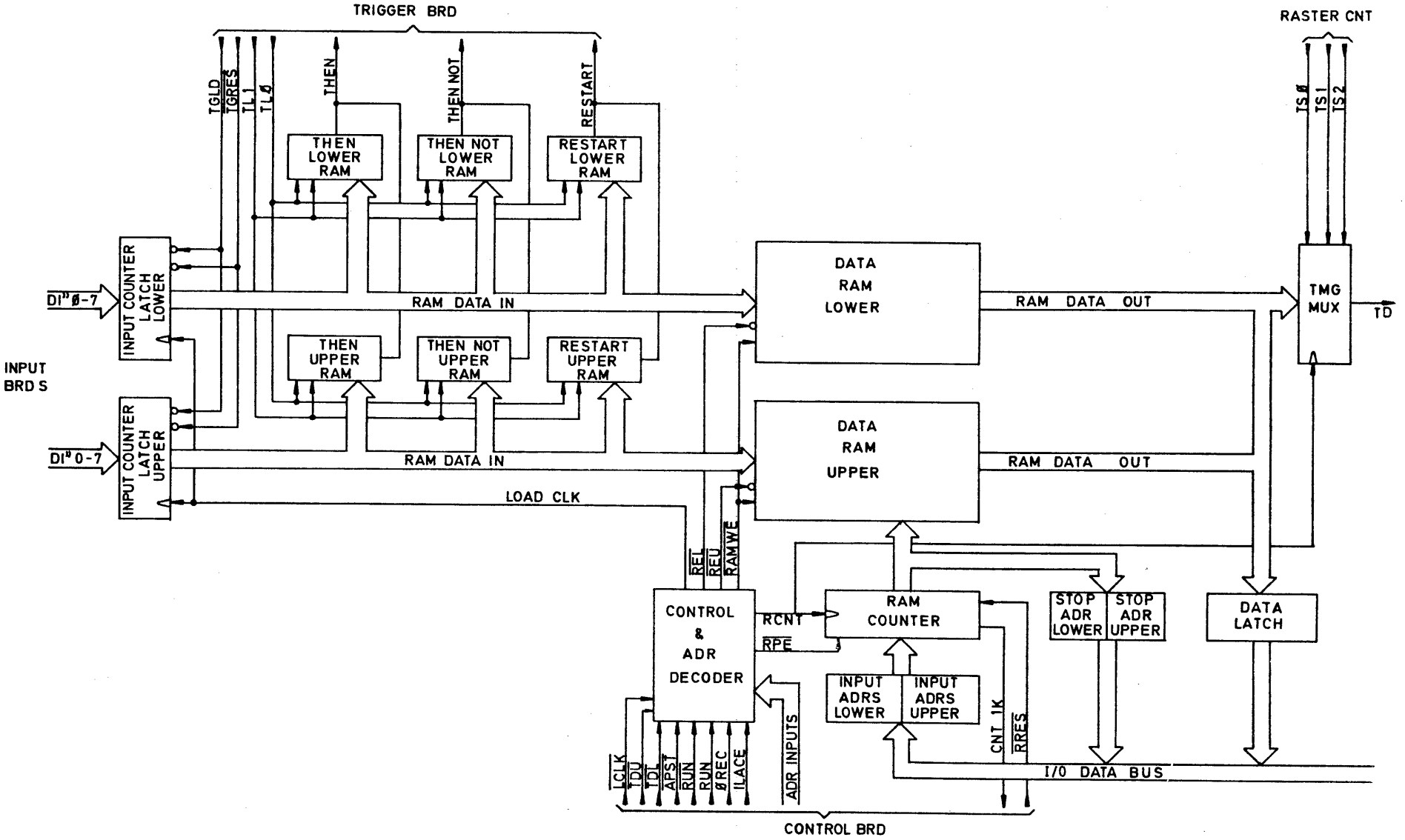
TRIGGER BRD
RASTER CNT
TGLD
TGRES
TL1
TL0
THEN
THEN NOT
RESTART
IS0
IS1
IS2
THEN LOWER RAM
THEN NOT LOWER RAM
RESTART LOWER RAM
INPUT BRD S
DI"0-7
INPUT COUNTER LATCH LOWER
RAM DATA IN
DATA RAM LOWER
RAM DATA OUT
TMG MUX
TD
THEN UPPER RAM
THEN NOT UPPER RAM
RESTART UPPER RAM
DI"0-7
INPUT COUNTER LATCH UPPER
RAM DATA IN
DATA RAM UPPER
RAM DATA OUT
LOAD CLK
REL
REU
RAMWE
CONTROL & ADR DECODER
RCNT
RPE
RAM COUNTER
STOP ADR LOWER
STOP ADR UPPER
DATA LATCH
INPUT ADRS LOWER
INPUT ADRS UPPER
CNT 1K
RRES
I/O DATA BUS
LCLK
TDU
TDL
APST
RUN
RUN
ØREC
ILACE
ADR INPUTS
CONTROL BRD
SBLA BOARD

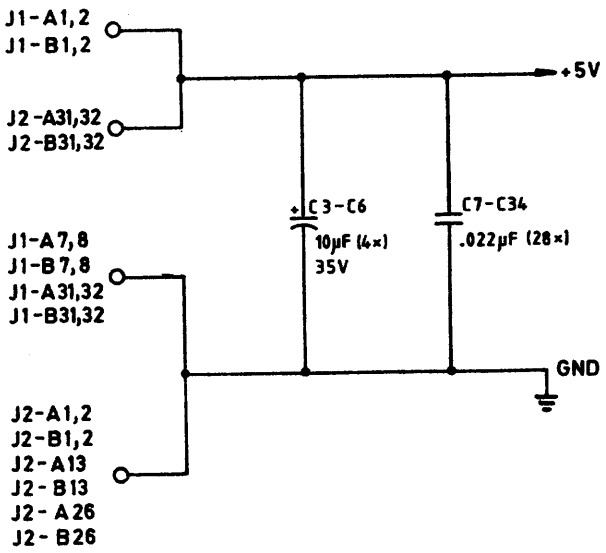

SBLA BOARD

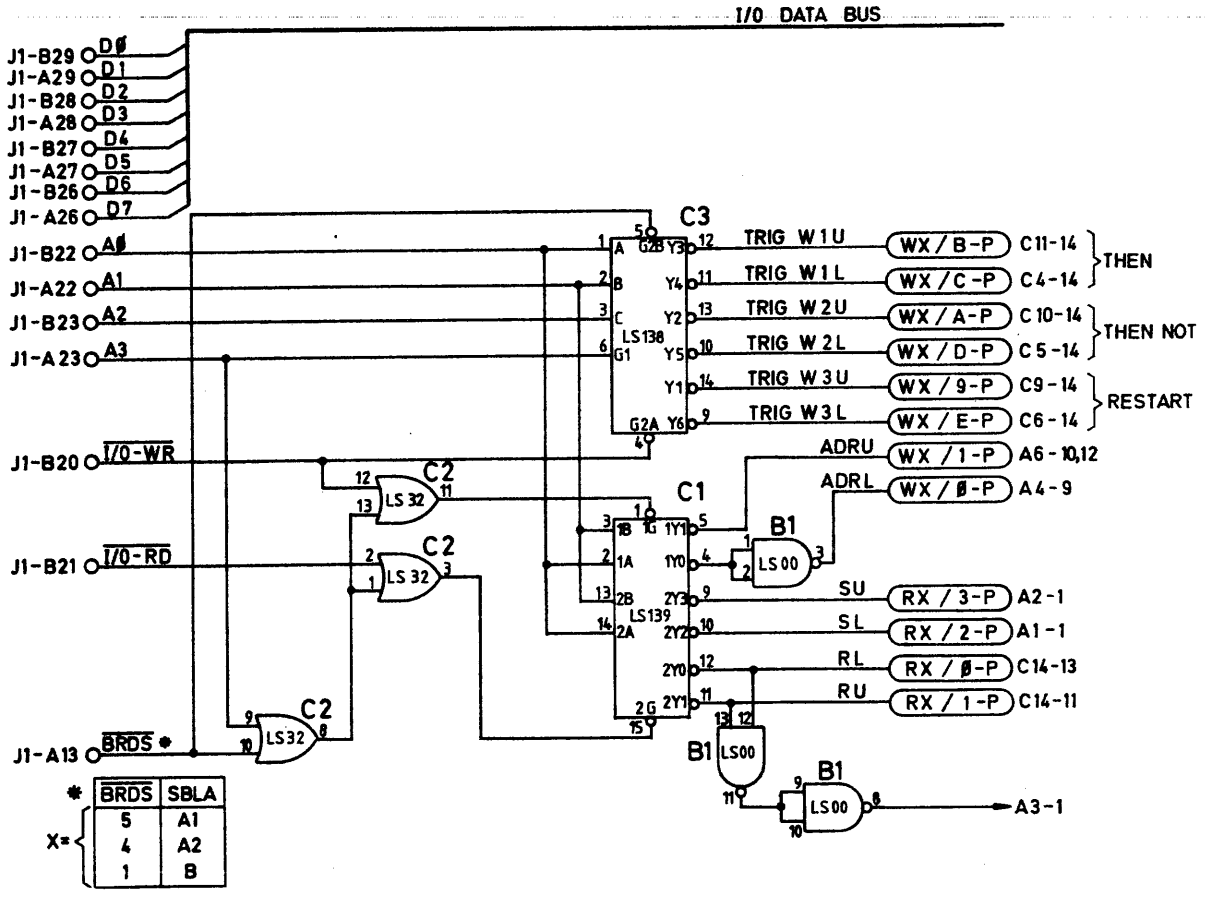

SBLA BOARD

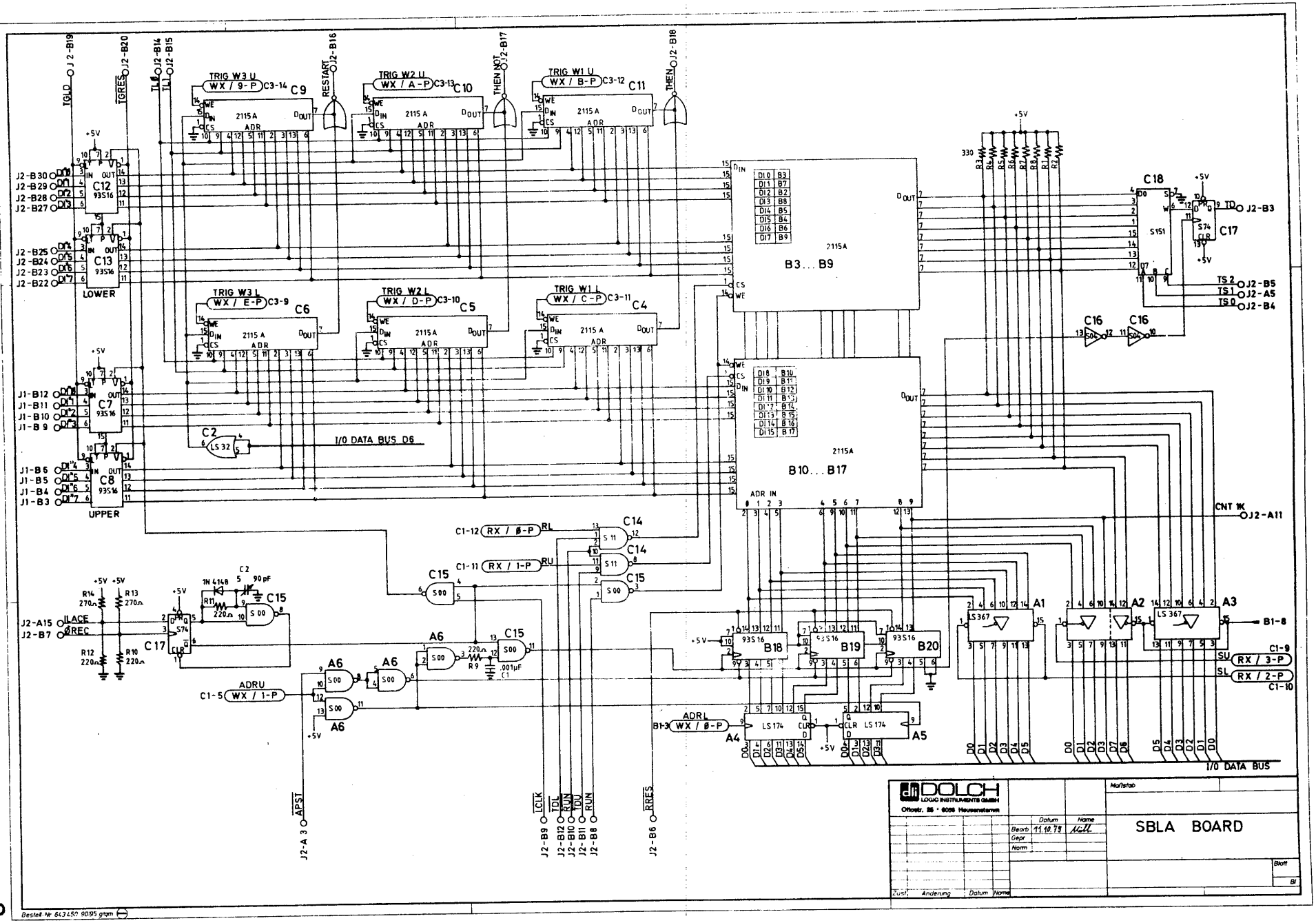

TRIG W3 U
WX / 9-P
C3-14
C9
TRIG W2 U
WX / A-P
C3-13
C10
TRIG W1 U
WX / B-P
C3-12
C11
TRIG W3 L
WX / E-P
C3-9
C6
TRIG W2 L
WX / D-P
C3-10
C5
TRIG W1 L
WX / C-P
C3-11
C4
2115 A
ADR
DIN
DOUT
CS
WE
TGLD
TGRES
TLL
RESTART
THEN NOT
THEN
J2-B19
J2-B20
J2-B14
J2-B15
J2-B16
J2-B17
J2-B18
J2-B30
J2-B29
J2-B28
J2-B27
J2-B25
J2-B24
J2-B23
J2-B22
J1-B12
J1-B11
J1-B10
J1-B9
J1-B6
J1-B5
J1-B4
J1-B3
C12
C13
C7
C8
93S16
LOWER
UPPER
+5V
C2
LS 32
I/O DATA BUS D6
B3 ... B9
B10 ... B17
ADR IN
C18
S151
S74
C17
TD
J2-B3
TS 2
TS 1
TS 0
J2-B5
J2-A5
J2-B4
C16
S04
CNT 1K
J2-A11
C1-12
RX / Ø-P
RL
C1-11
RX / 1-P
RU
C14
C15
S11
S00
1N 4148
90 pF
R14
R13
R11
R12
R10
270Ω
220Ω
J2-A15
J2-B7
ILACE
ØREC
A6
R9
.001µF
C1-5
ADRU
WX / 1-P
ADRL
B1-3
WX / Ø-P
B18
B19
B20
LS 174
A1
A2
A3
A4
A5
LS 367
B1-8
C1-9
SU
RX / 3-P
SL
RX / 2-P
C1-10
I/O DATA BUS
APST
J2-A 3
LCLK
TDL
RUN
TDU
RUN
J2-B9
J2-B12
J2-B10
J2-B11
J2-B8
RRES
J2-B6
DOLCH
LOGIC INSTRUMENTS GMBH
Ottostr. 25 · 6058 Hausenstamm
Maßstab
Datum
Name
Bearb
11.10.79
Gepr
Norm
SBLA BOARD
Blatt
Bl
Zust.
Änderung
Datum
Name
Bestell-Nr 643450 90/95 gtam

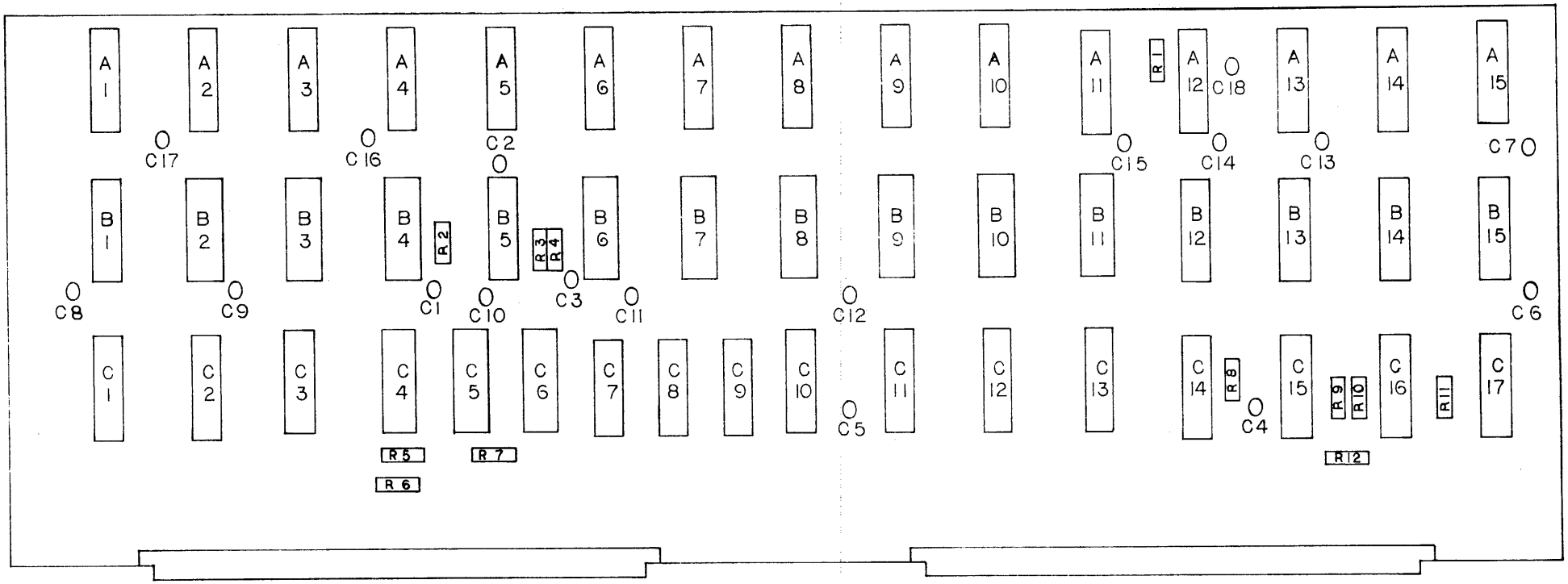

CODE	ERN	DATE	
REVISIONS			
CHECK	DATE	NAME	
DRAWN	D. ANGEL	3 80	

DOLCH LOGIC INSTRUMENTS

CONTROL BOARD

PART NUMBER

CONT 4850 ASY

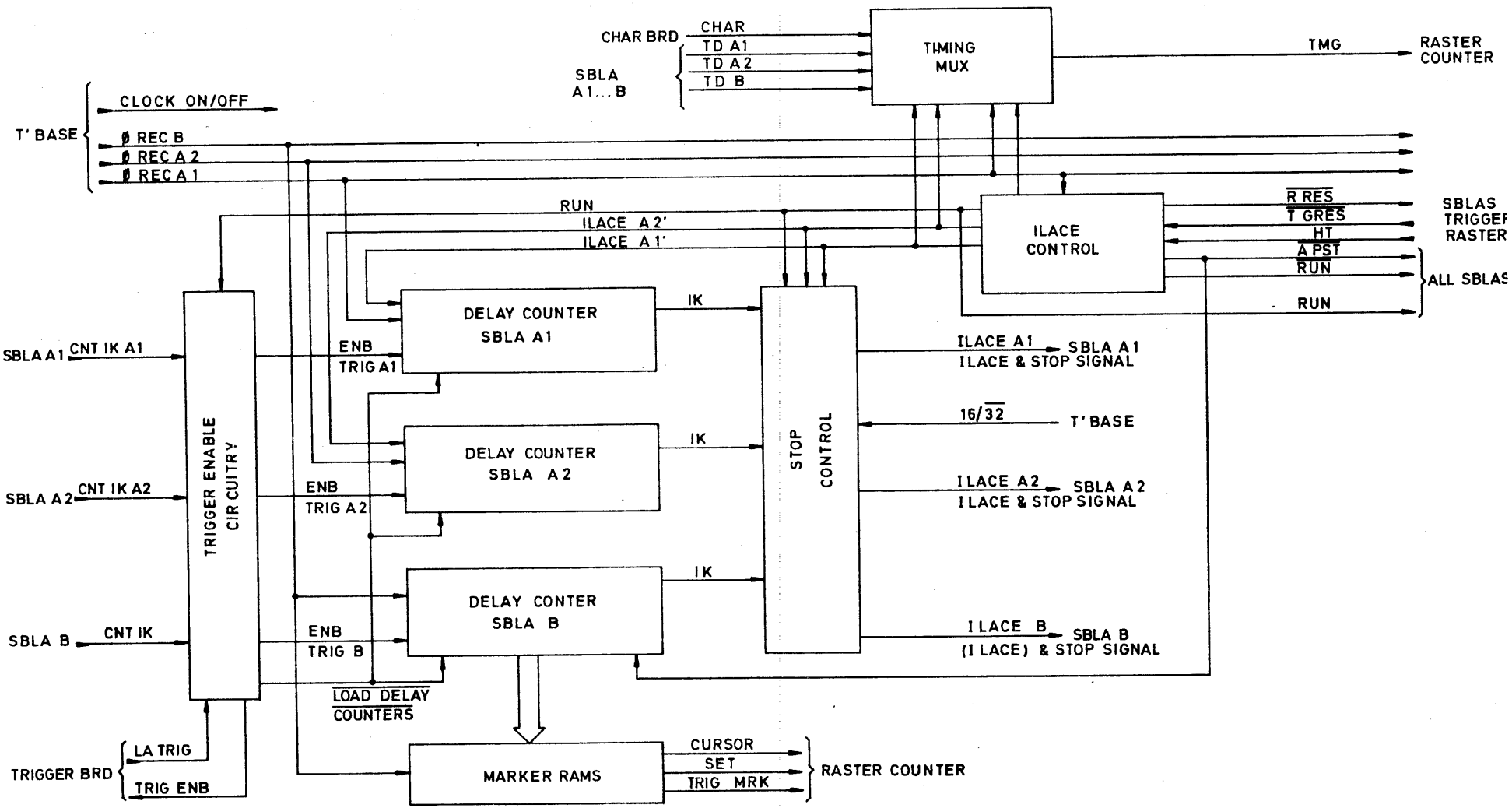

CONTROL BOARD

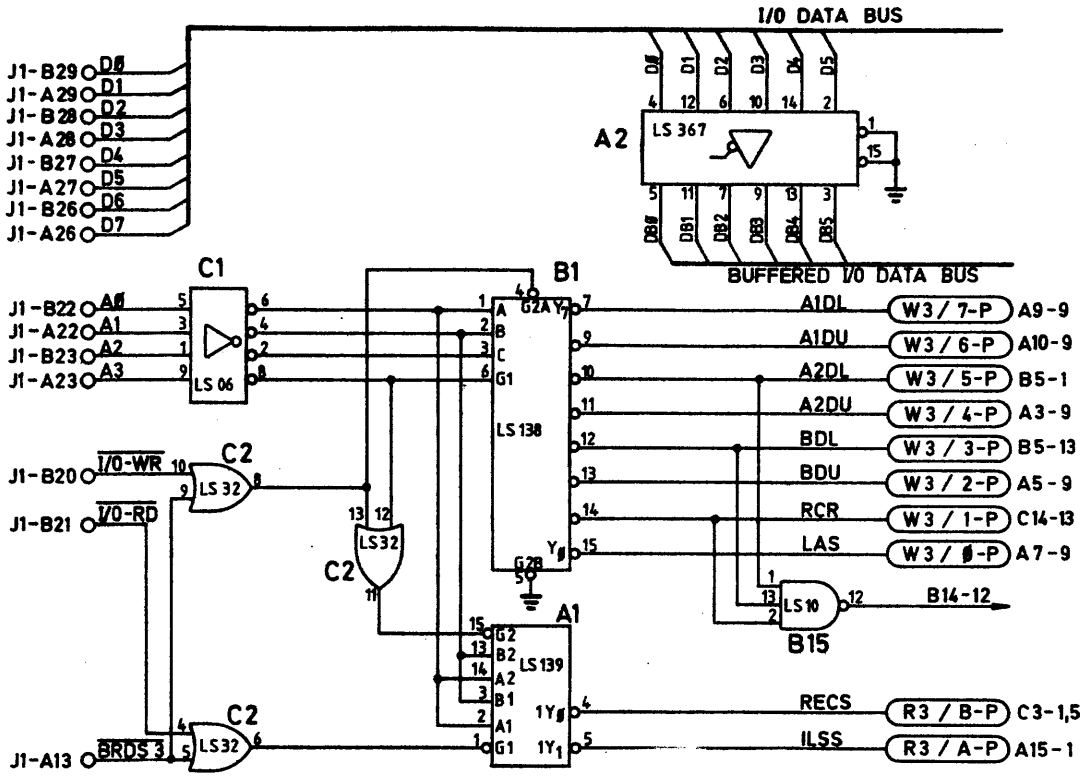

CONTROL BOARD

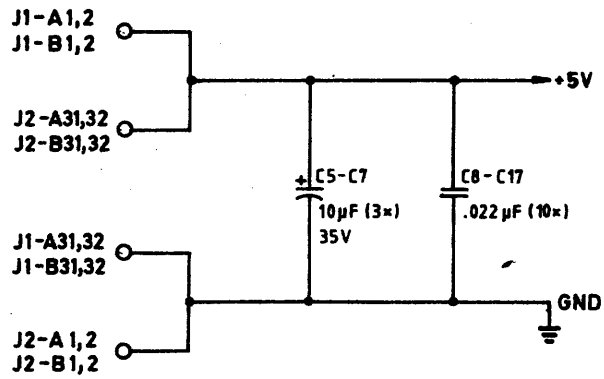

CONTROL BOARD

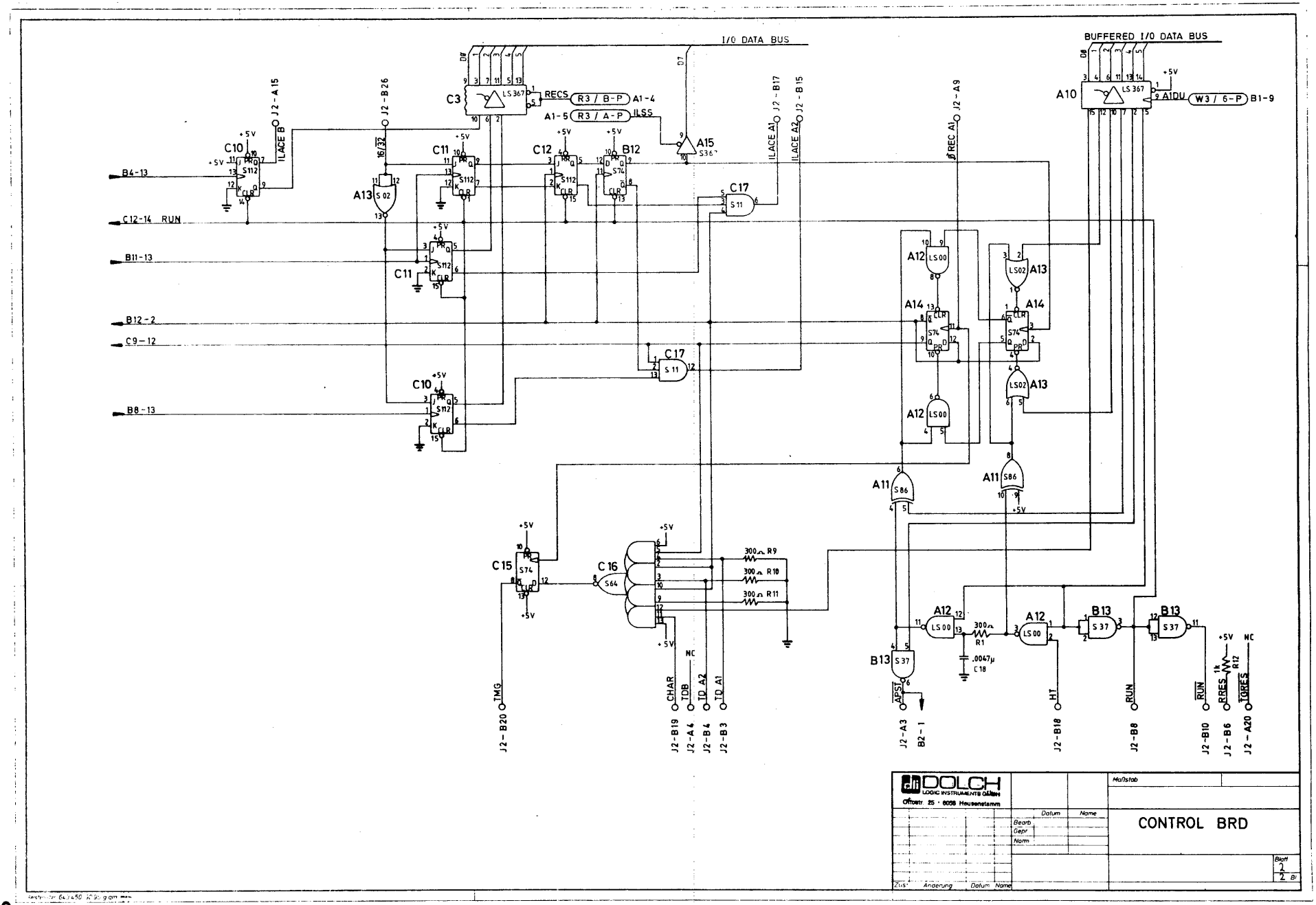
I/O DATA BUS
BUFFERED I/O DATA BUS
B4-13
C12-14 RUN
B11-13
B12-2
C9-12
B8-13
RECS
R3 / B-P
A1-4
A1-5
R3 / A-P
ILSS
A1DU
W3 / 6-P
B1-9
ILACE B
ILACE A1
ILACE A2
ØREC A1
TMG
CHAR
TDB
TD A2
TD A1
APST
HT
RUN
RRES
TGRES
J2-B20
J2-B19
J2-A4
J2-B4
J2-B3
J2-A3
B2-1
J2-B18
J2-B8
J2-B10
J2-B6
J2-A20
DOLCH
LOGIC INSTRUMENTS GMBH
Ottostr. 25 · 6058 Heusenstamm
Maßstab
Datum
Name
Bearb
Gepr
Norm
CONTROL BRD
Blatt
Änderung
Zust

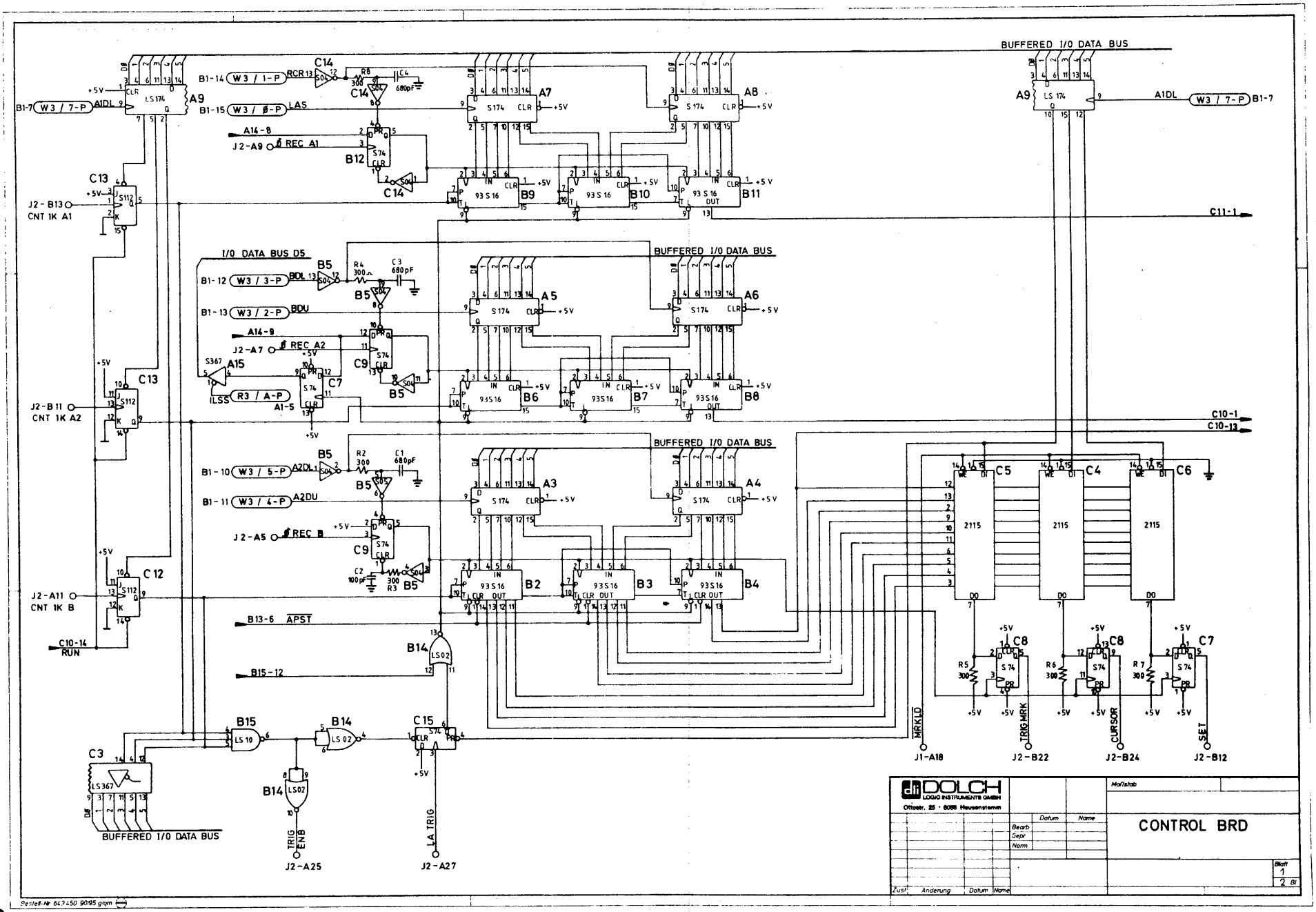
BUFFERED I/O DATA BUS
I/O DATA BUS D5
BUFFERED I/O DATA BUS
BUFFERED I/O DATA BUS
BUFFERED I/O DATA BUS
B1-14 W3 / 1-P RCR
B1-15 W3 / Ø-P LAS
B1-7 W3 / 7-P A1DL
A14-8
J2-A9 REC A1
J2-B13 CNT 1K A1
J2-B11 CNT 1K A2
J2-A11 CNT 1K B
C10-14 RUN
B1-12 W3 / 3-P BDL
B1-13 W3 / 2-P BDU
A14-9
J2-A7 REC A2
ILSS R3 / A-P A1-5
B1-10 W3 / 5-P A2DL
B1-11 W3 / 4-P A2DU
J2-A5 REC B
B13-6 APST
B15-12
C11-1
C10-1
C10-13
MRKLD
TRIG MRK
CURSOR
SET
J1-A18
J2-B22
J2-B24
J2-B12
TRIG ENB
LA TRIG
J2-A25
J2-A27
DOLCH
LOGIC INSTRUMENTS GMBH
Ottostr. 25 · 6058 Heusenstamm
CONTROL BRD
Maßstab
Datum
Name
Bearb
Gepr
Norm
Zust
Änderung
Datum
Name
Blatt 1
2 Bl
Bestell-Nr 643.450 90/95 gigm

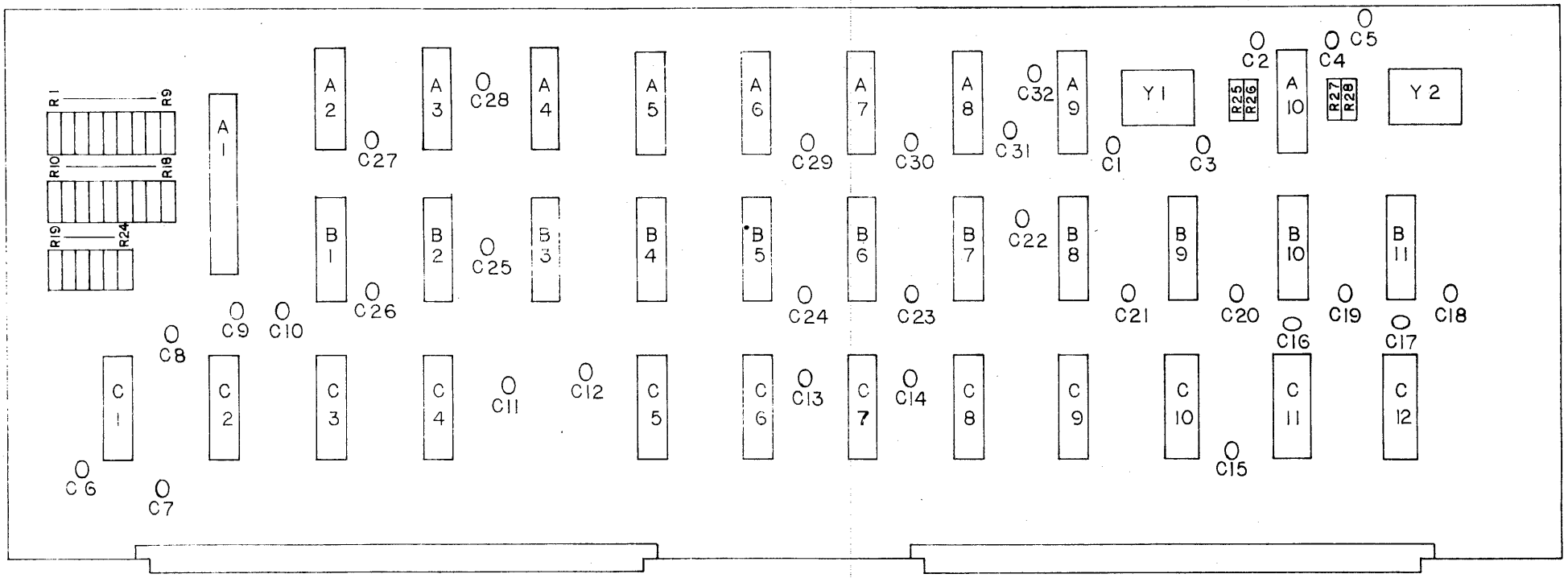

CODE	ERN	DATE	REVISIONS	DATE	NAME
CHECK					
DRAWN					

DOLCH LOGIC INSTRUMENTS

TIME BASE BRD

PART NUMBER

TBS 4850 ASY

SH

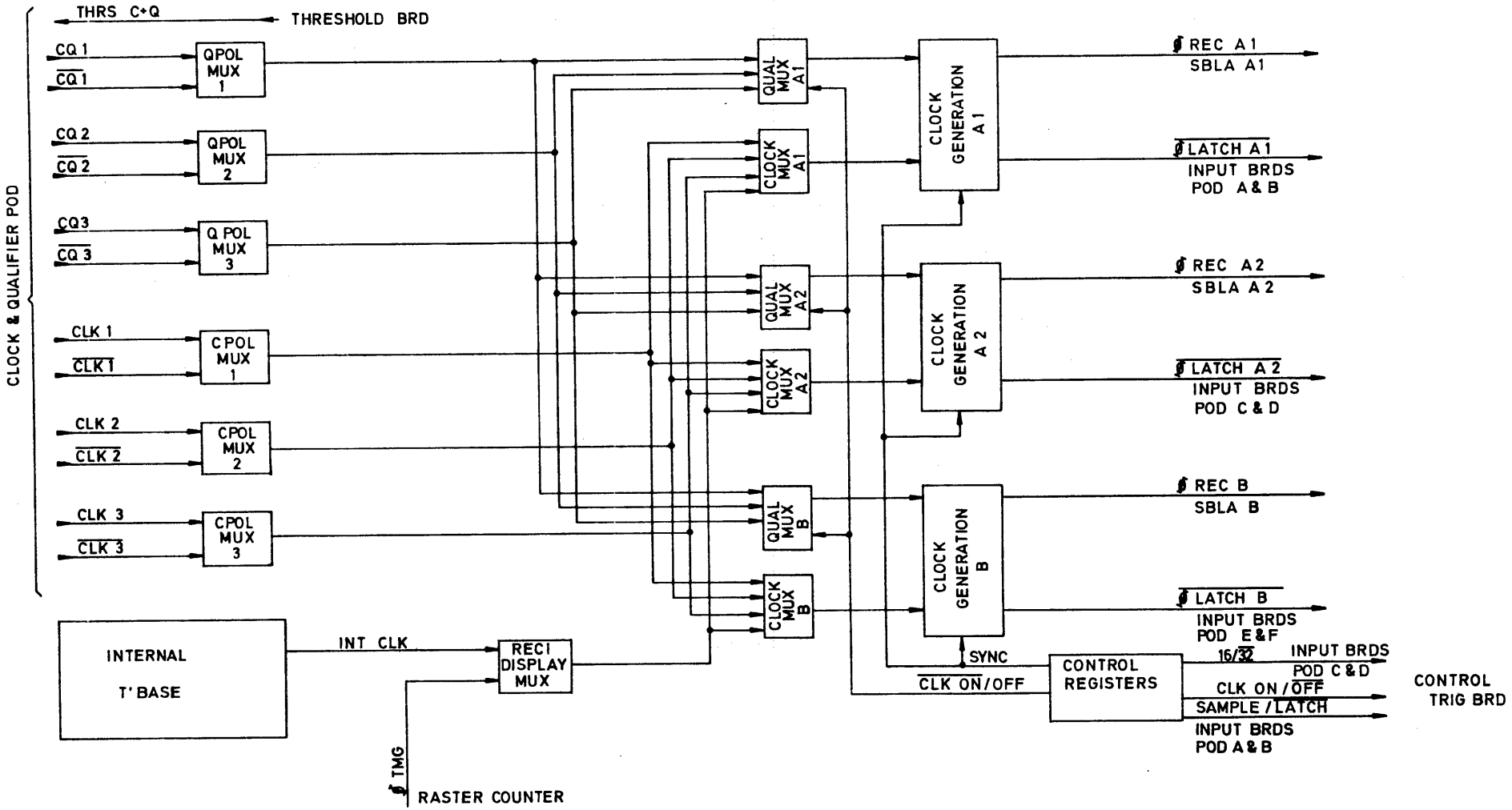

TIME BASE BOARD

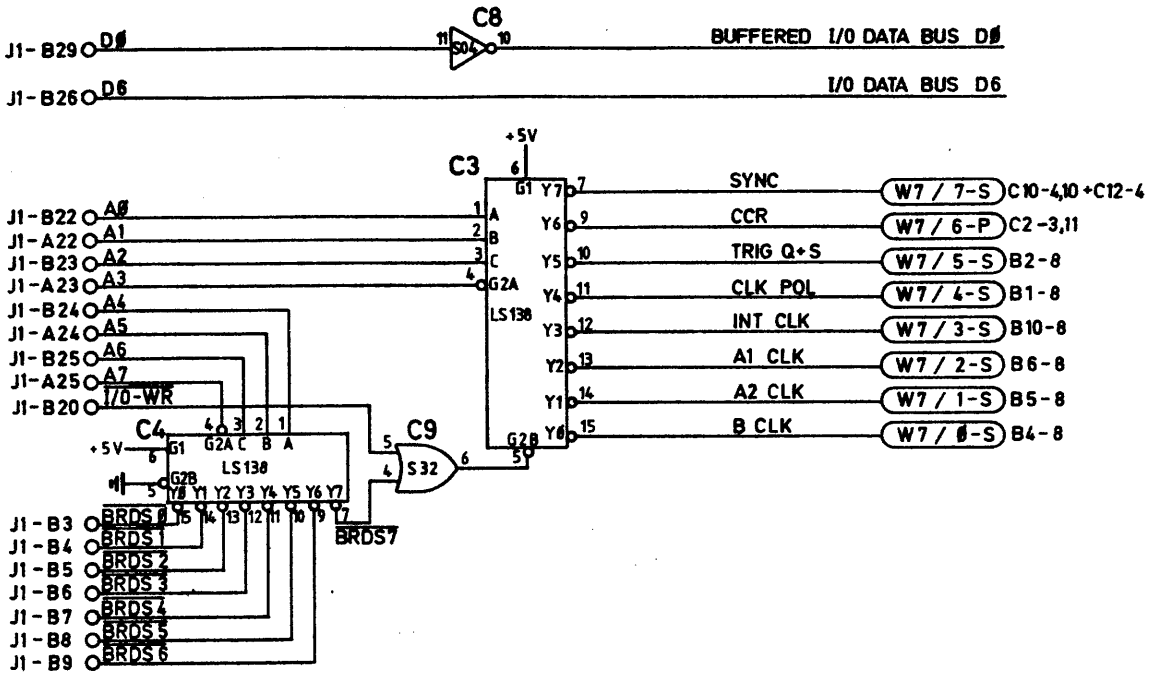

TIME BASE BOARD

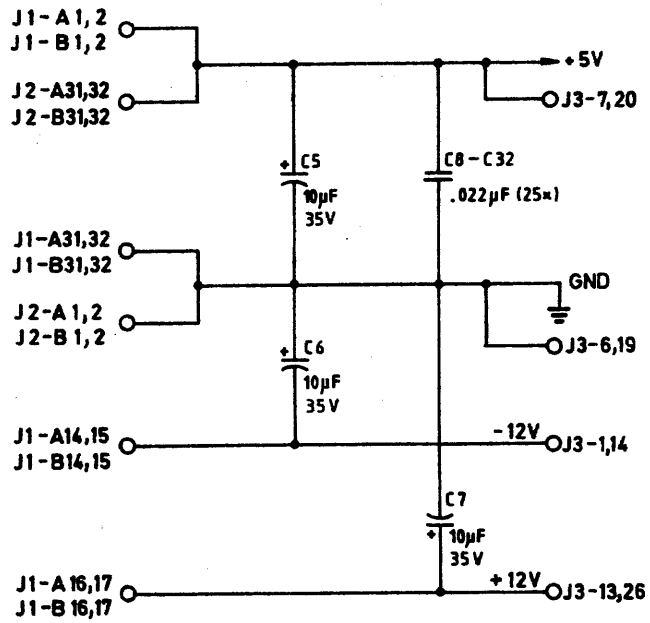

TIME BASE BOARD

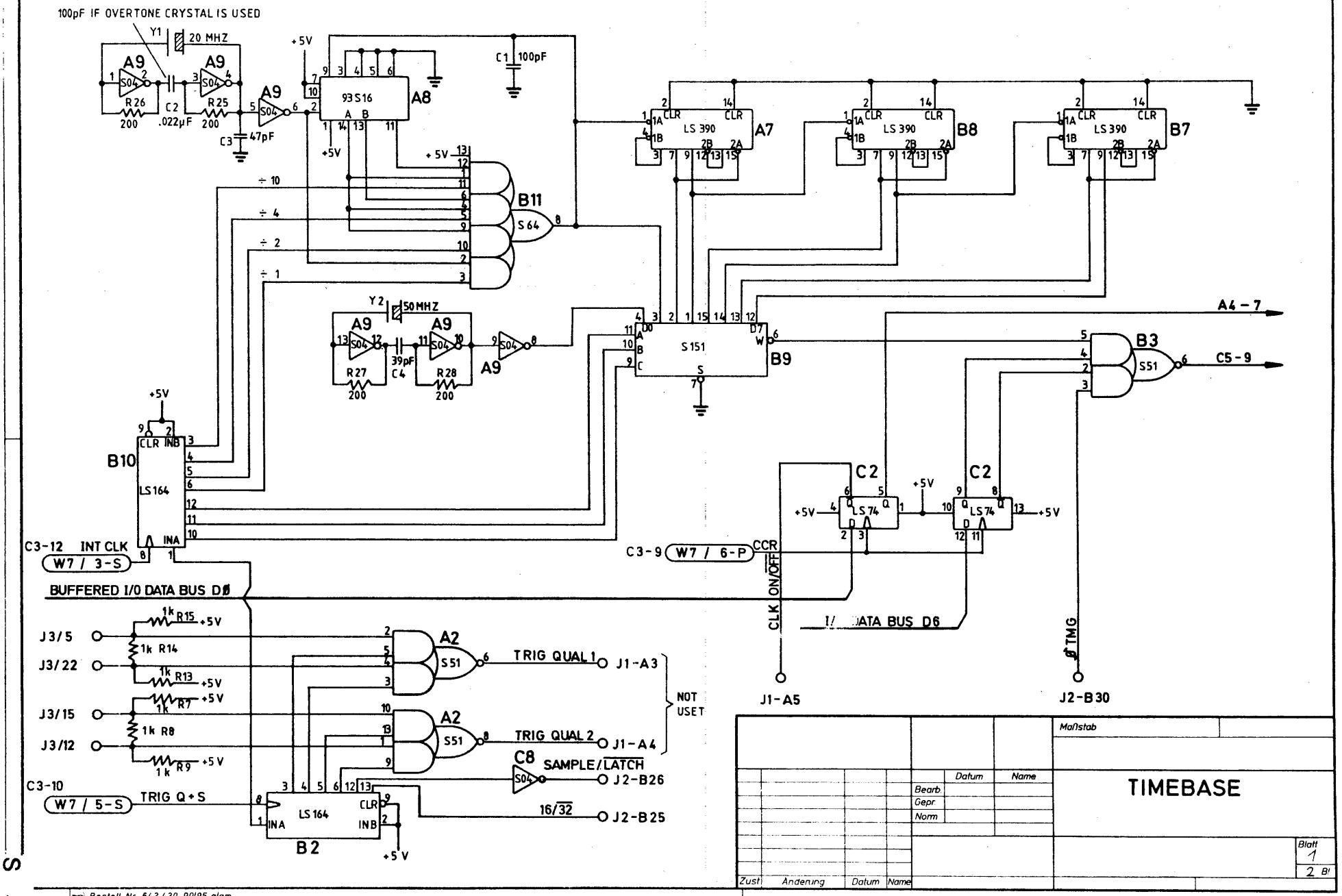

				Maßstab	
			Datum	Name	TIMEBASE
			Bearb		
			Gepr		
			Norm		
Zust	Änderung	Datum	Name		Blatt 1 2 Bl

Bestell-Nr 643 430 90/95 glqm

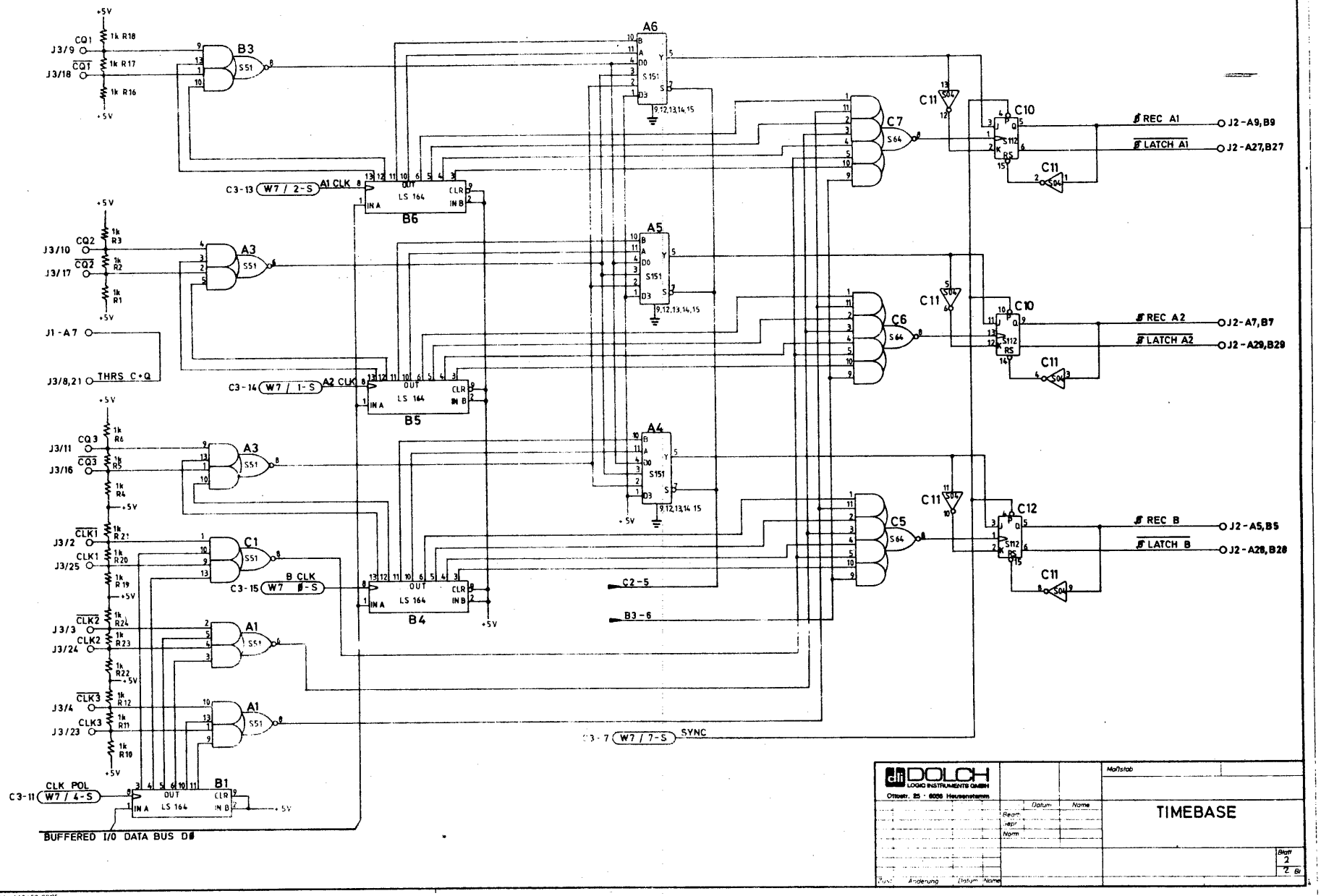
+5V
CQ1
J3/9
CQ1
J3/18
1k R18
1k R17
1k R16
B3
S51
A6
S151
C7
S64
C11
C10
S112
RS
REC A1
LATCH A1
J2-A9,B9
J2-A27,B27
C3-13 W7 / 2-S
A1 CLK
LS 164
B6
CQ2
J3/10
CQ2
J3/17
1k R3
1k R2
1k R1
A3
A5
J1-A7
J3/8,21 THRS C*Q
C3-14 W7 / 1-S
A2 CLK
B5
C6
REC A2
LATCH A2
J2-A7,B7
J2-A29,B29
CQ3
J3/11
CQ3
J3/16
1k R6
1k R5
1k R4
A4
C5
C12
REC B
LATCH B
J2-A5,B5
J2-A28,B28
CLK1
J3/2
CLK1
J3/25
1k R21
1k R20
1k R19
C1
C3-15 W7 / 8-S
B CLK
B4
C2-5
B3-6
CLK2
J3/3
CLK2
J3/24
1k R24
1k R23
1k R22
CLK3
J3/4
CLK3
J3/23
1k R12
1k R11
1k R10
C3-7 W7 / 7-S
SYNC
CLK POL
C3-11 W7 / 4-S
B1
BUFFERED I/O DATA BUS D
DOLCH
LOGIC INSTRUMENTS GMBH
Ottostr. 25 · 6056 Heusenstamm
Maßstab
TIMEBASE
Datum
Name
Bearb.
Gepr.
Norm
Änderung
Blatt 2
2 Bl

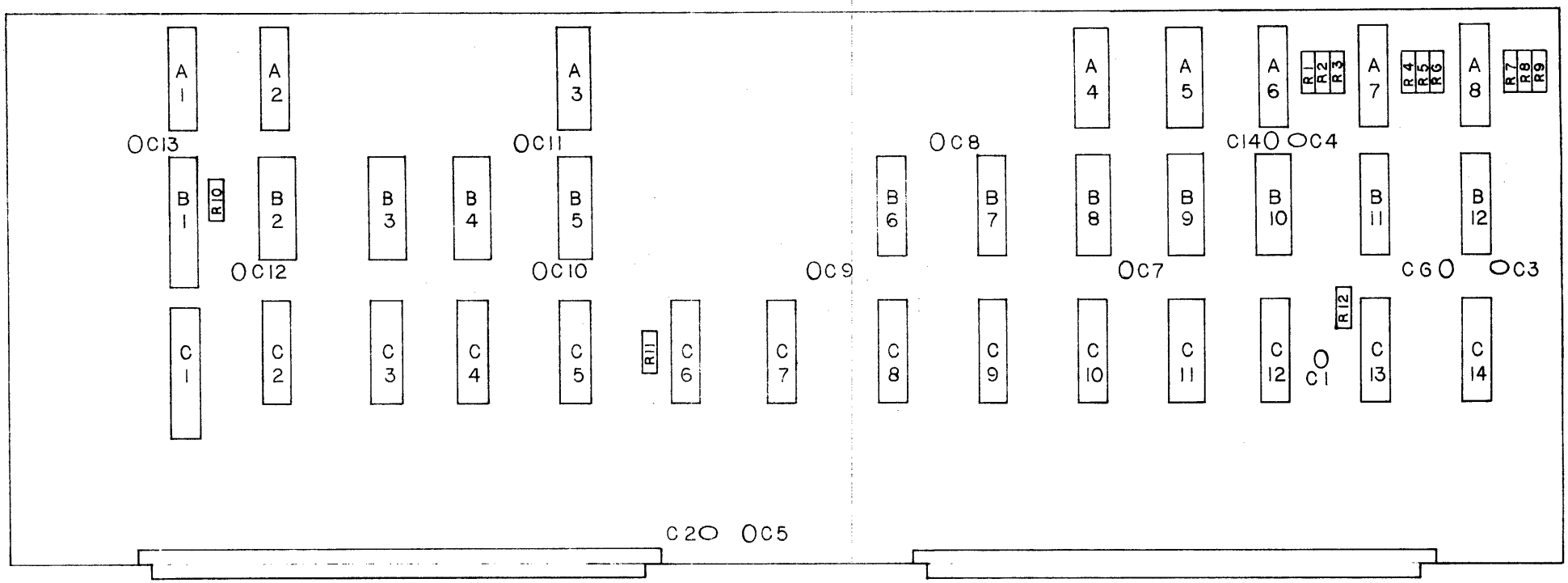

CODE	ERN	DATE	REVISIONS	DATE	NAME
CHECK					
DRAWN					P. ANGEL

DOLCH LOGIC INSTRUMENTS

TRIGGER BOARD

PART NUMBER

TRIG 4850 ASY

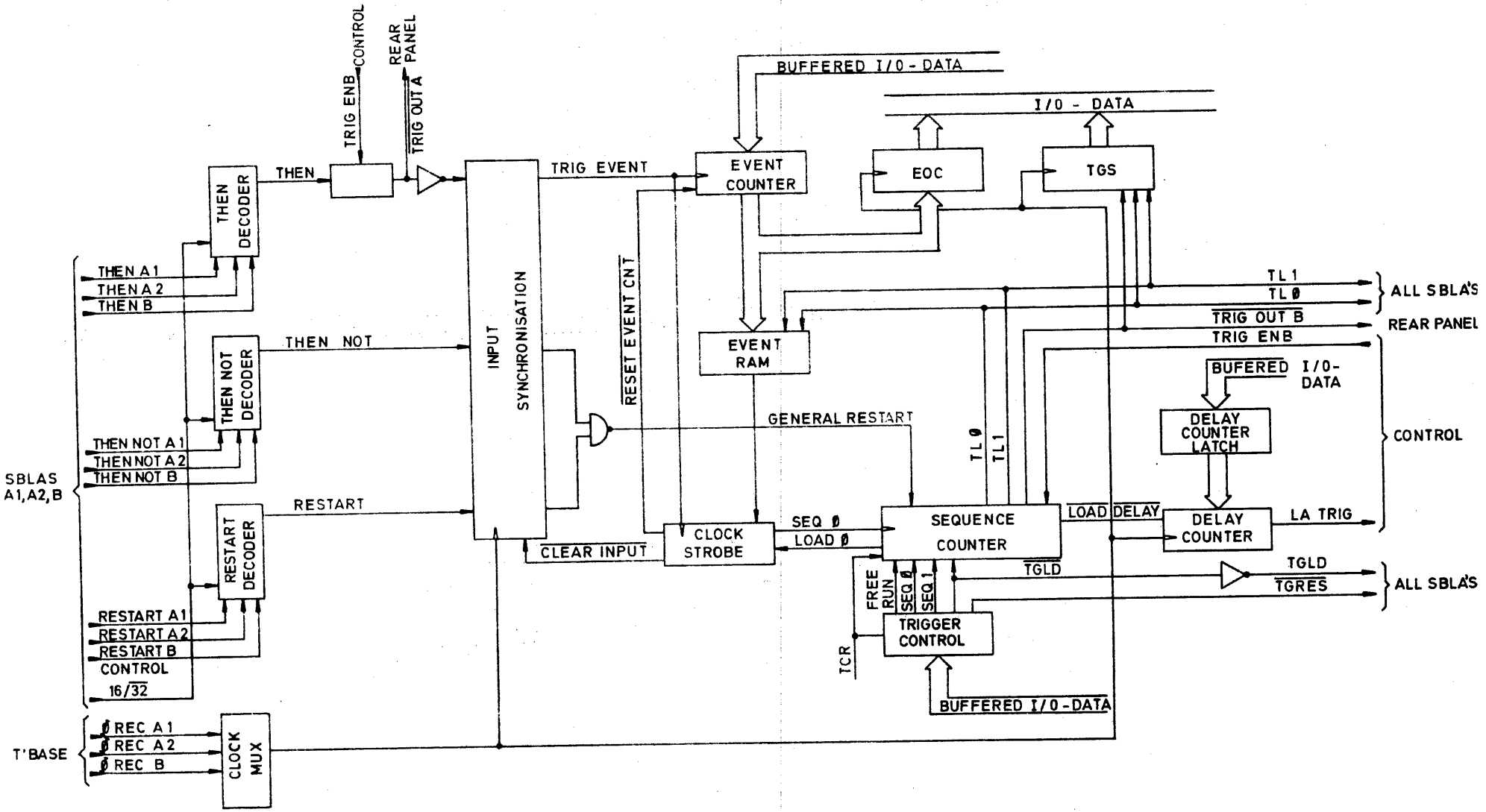

TRIGGER BOARD

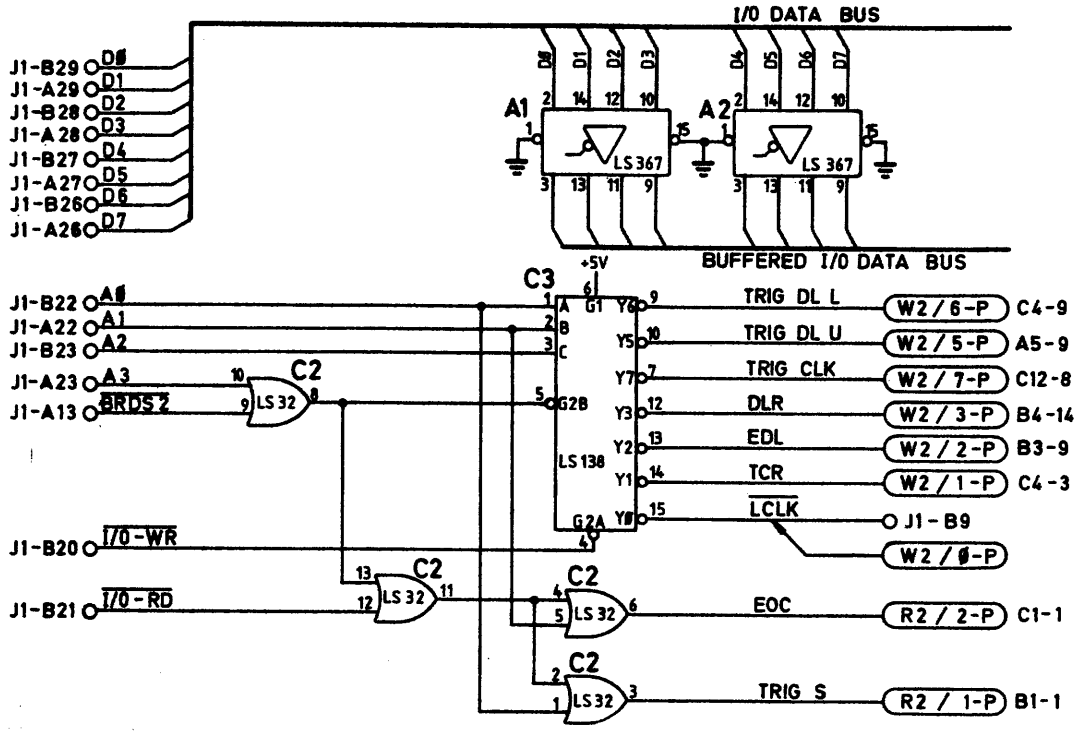

TRIGGER BOARD

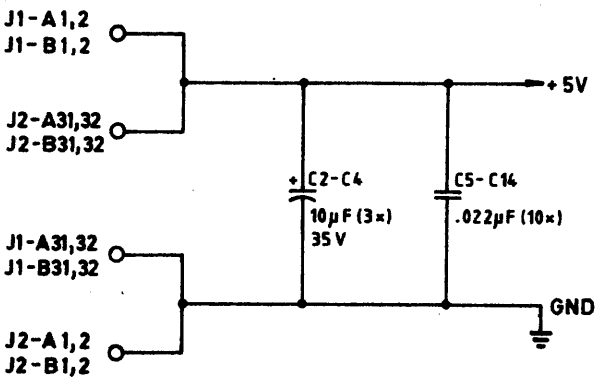

TRIGGER BOARD

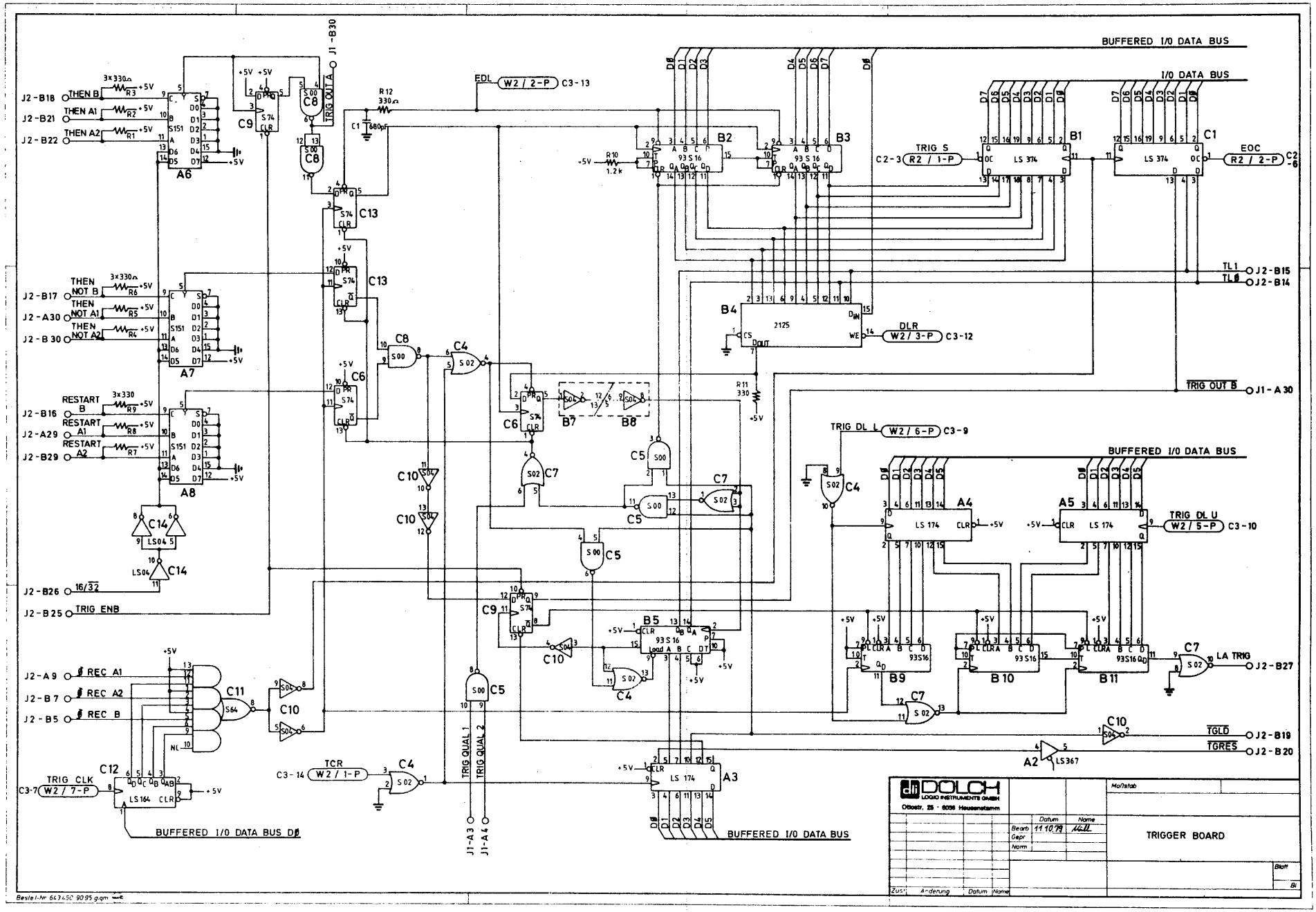
BUFFERED I/O DATA BUS
I/O DATA BUS
EDL W2 / 2-P C3-13
TRIG S C2-3 R2 / 1-P
EOC R2 / 2-P C2-6
DLR W2 / 3-P C3-12
TRIG OUT B J1-A30
TRIG DL L W2 / 6-P C3-9
TRIG DL U W2 / 5-P C3-10
LA TRIG J2-B27
TGLD J2-B19
TGRES J2-B20
TRIG OUT A J1-B30
TRIG QUAL 1
TRIG QUAL 2
J1-A3
J1-A4
TCR C3-14 W2 / 1-P
TRIG CLK C3-7 W2 / 7-P
BUFFERED I/O DATA BUS DØ
J2-B18 THEN B
J2-B21 THEN A1
J2-B22 THEN A2
J2-B17 THEN NOT B
J2-A30 THEN NOT A1
J2-B30 THEN NOT A2
J2-B16 RESTART B
J2-A29 RESTART A1
J2-B29 RESTART A2
J2-B26 16/32
J2-B25 TRIG ENB
J2-A9 Ø REC A1
J2-B7 Ø REC A2
J2-B5 Ø REC B
DOLCH LOGIC INSTRUMENTS GMBH
Ottostr. 25 · 6056 Heusenstamm
Maßstab
Datum Name
Bearb 11.10.79
Gepr
Norm
TRIGGER BOARD
Blatt
Bl
Zust. Änderung Datum Name
Bestel-Nr 643450 9095 g.qm

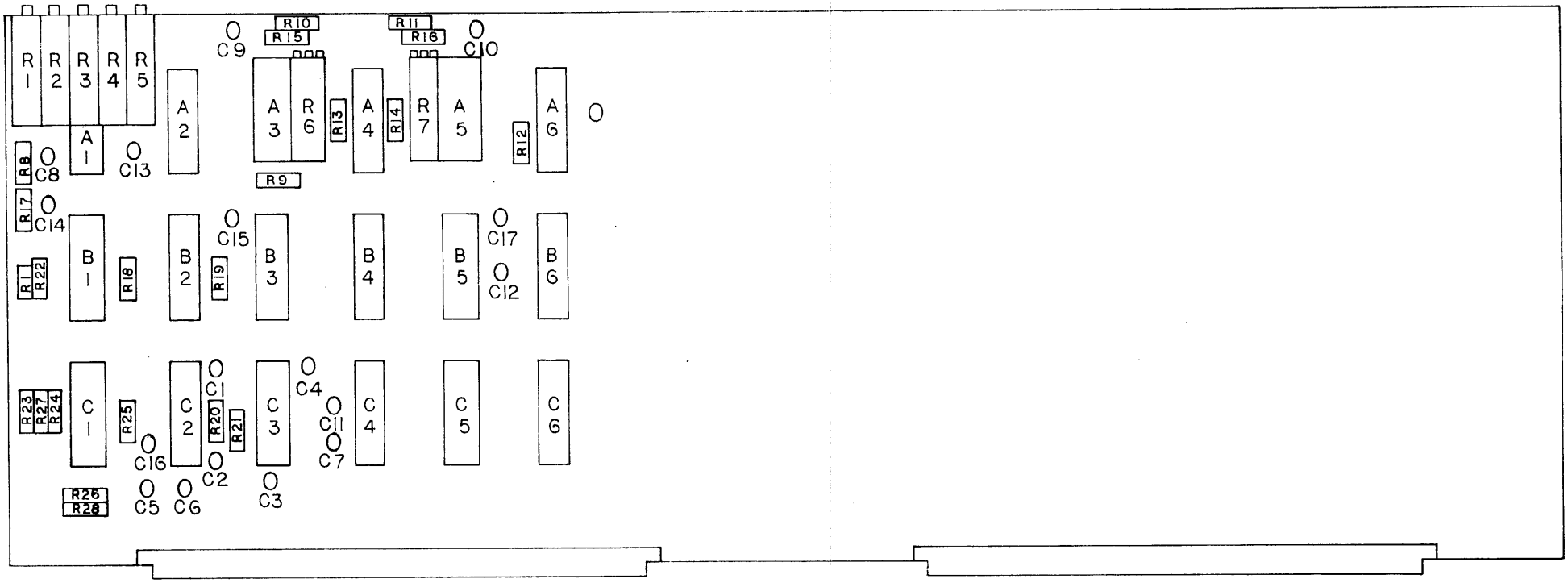

CODE	ERN	DATE	REVISIONS	DATE	NAME	D. ANGEL
				CHECK	DRAWN	

DOLCH LOGIC INSTRUMENT

THRESHOLD BRD

PART NUMBER

THRES 4850 ASY

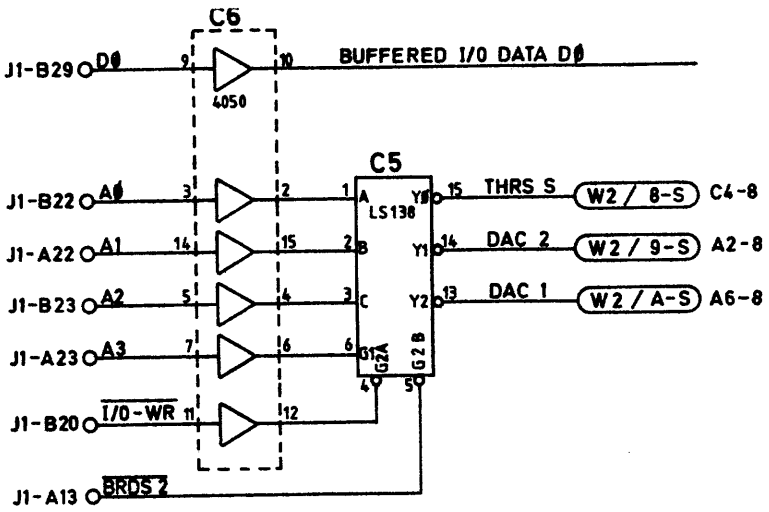

THRESHOLD BOARD

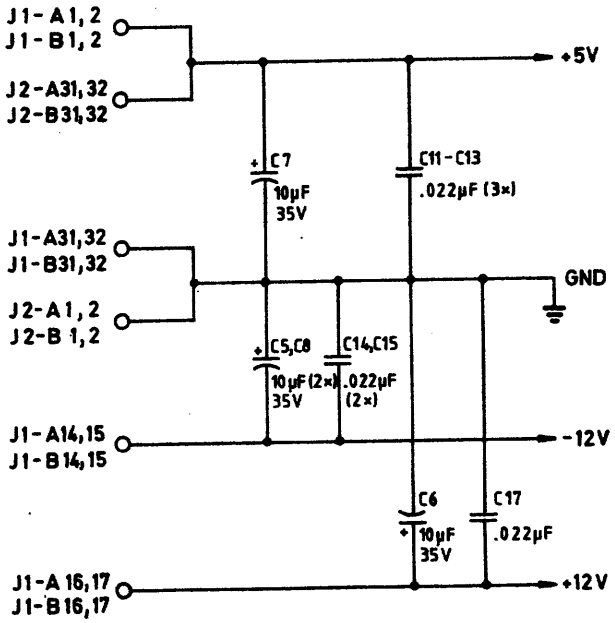

THRESHOLD BOARD

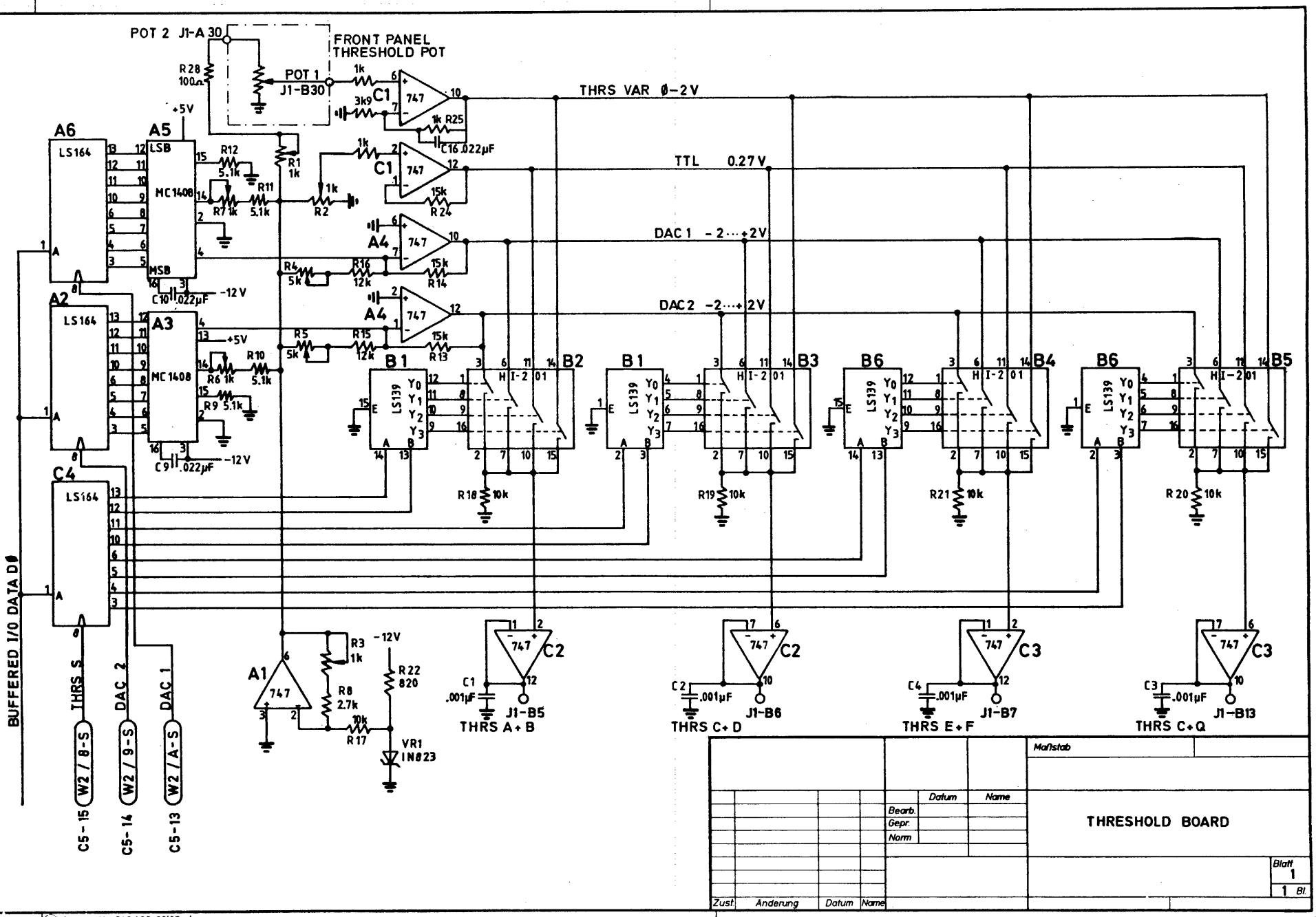

					Datum	Name
				Bearb.		
				Gepr.		
				Norm		
Zust	Änderung	Datum	Name			

Maßstab

THRESHOLD BOARD

Blatt 1

1 Bl.

Bestell-Nr 643 430 90195 glqm

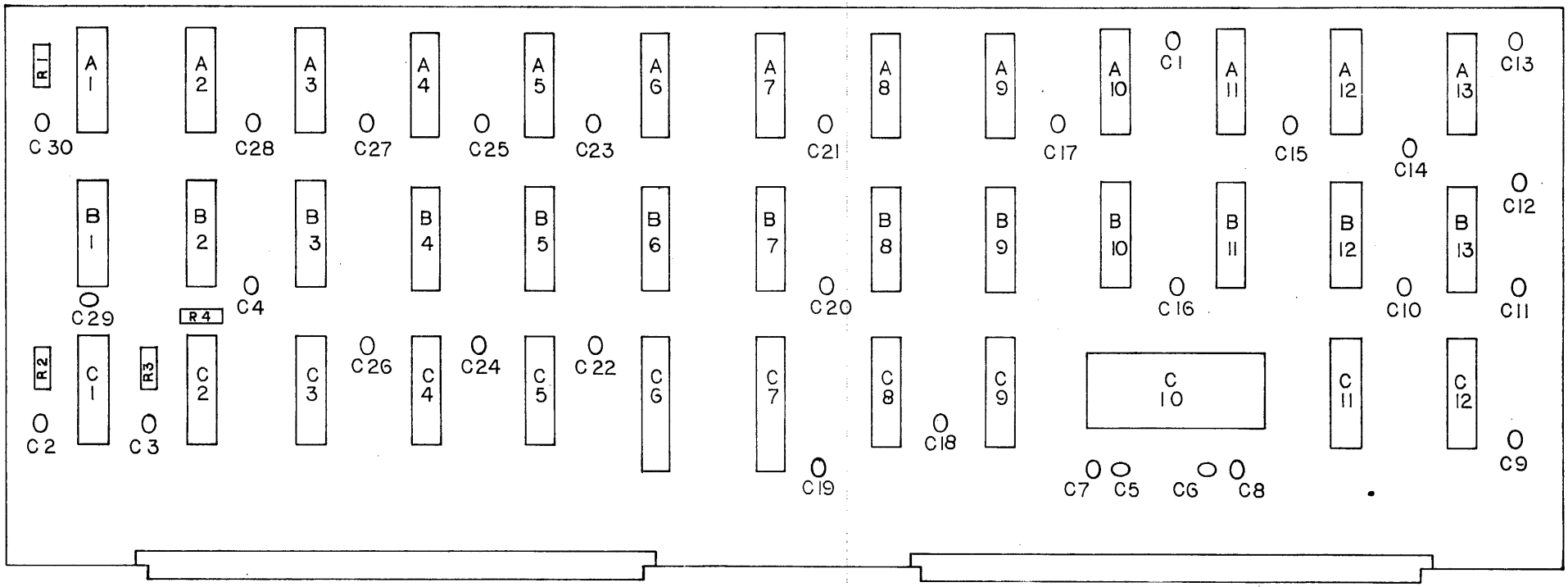

		CODE	ERN	DATE	NAME		DOLCH LOGIC INSTRUMENTS
				REVISIONS	DATE	3-80	CHARACTER GENERATOR BOARD
					CHECK	DRAWN	PART NUMBER / CHAR 4850 ASY

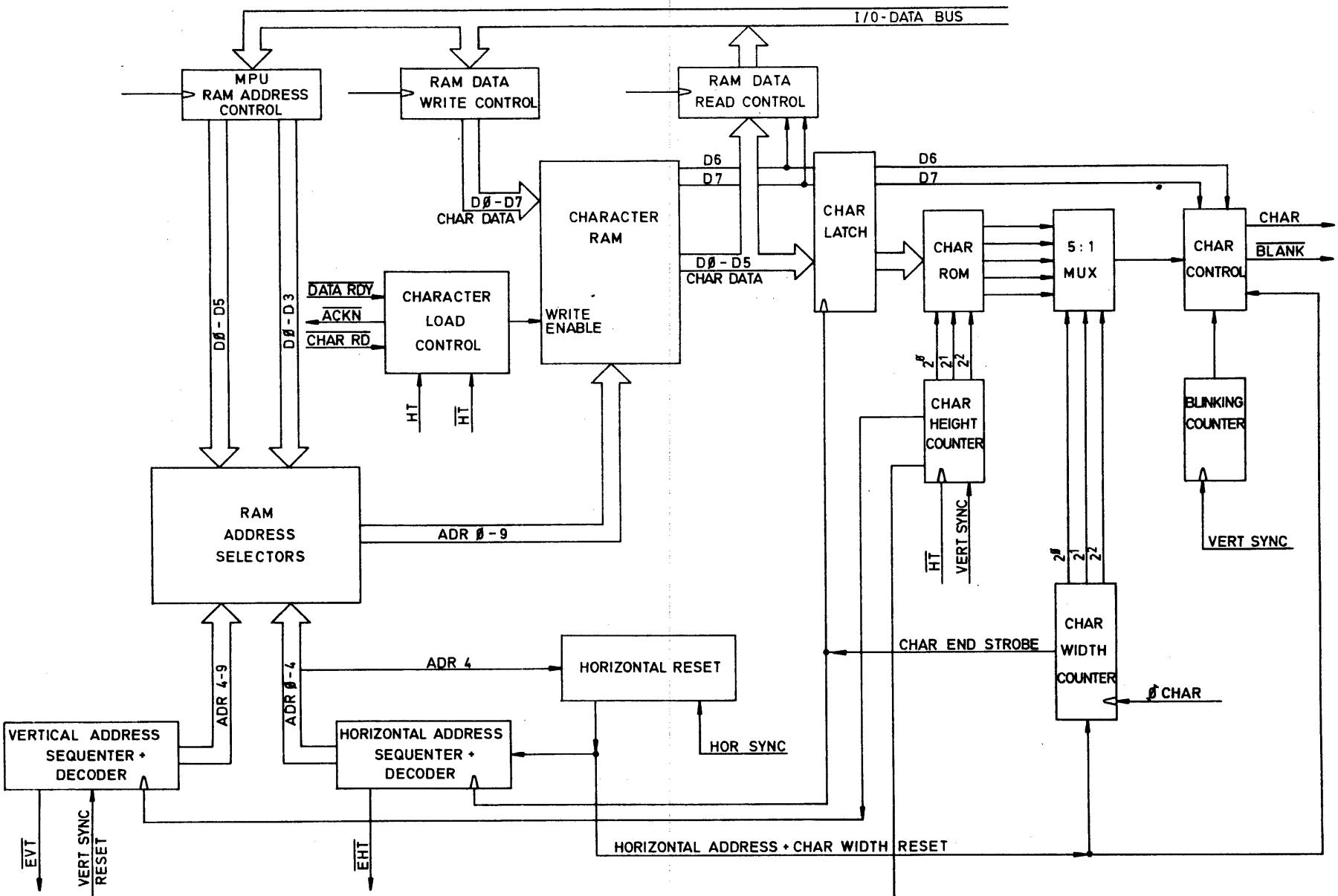

CHARACTER BOARD

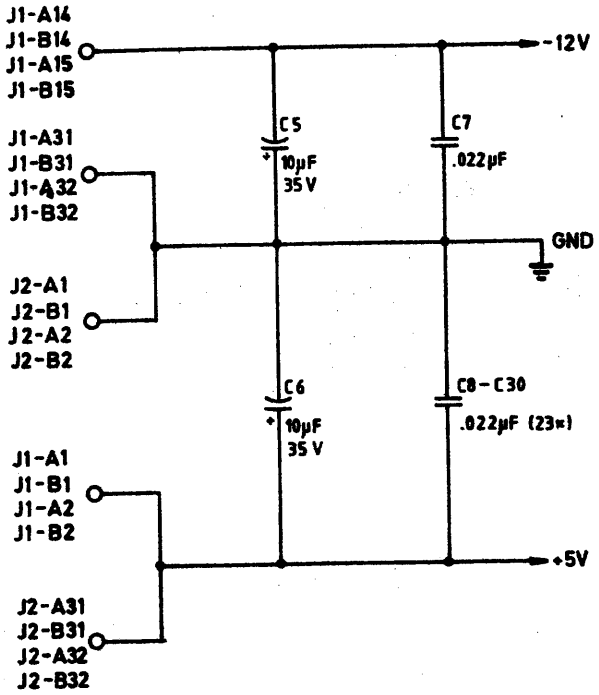

CHARACTER BOARD

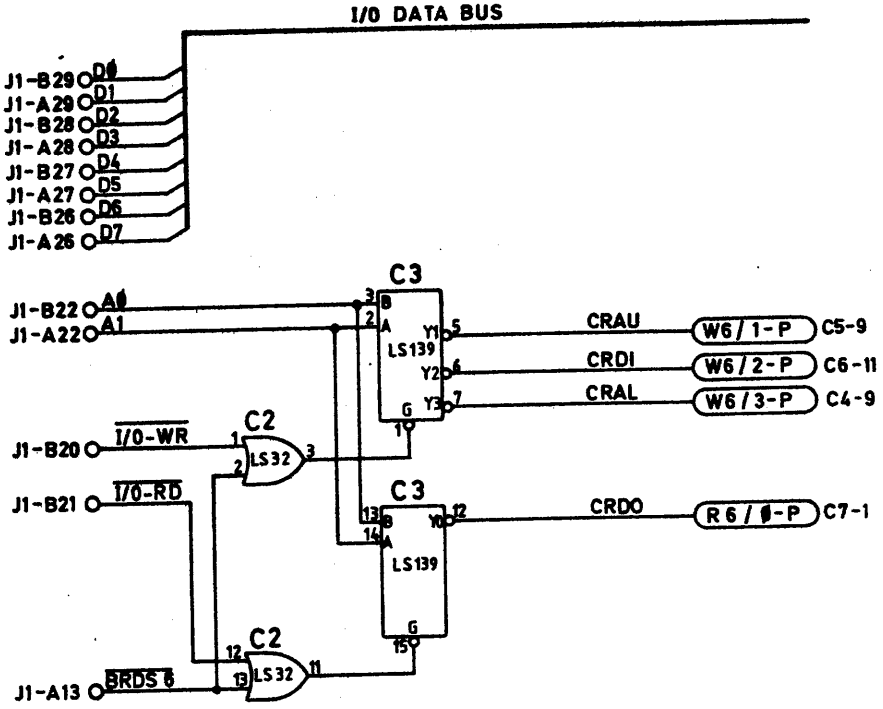

CHARACTER BOARD

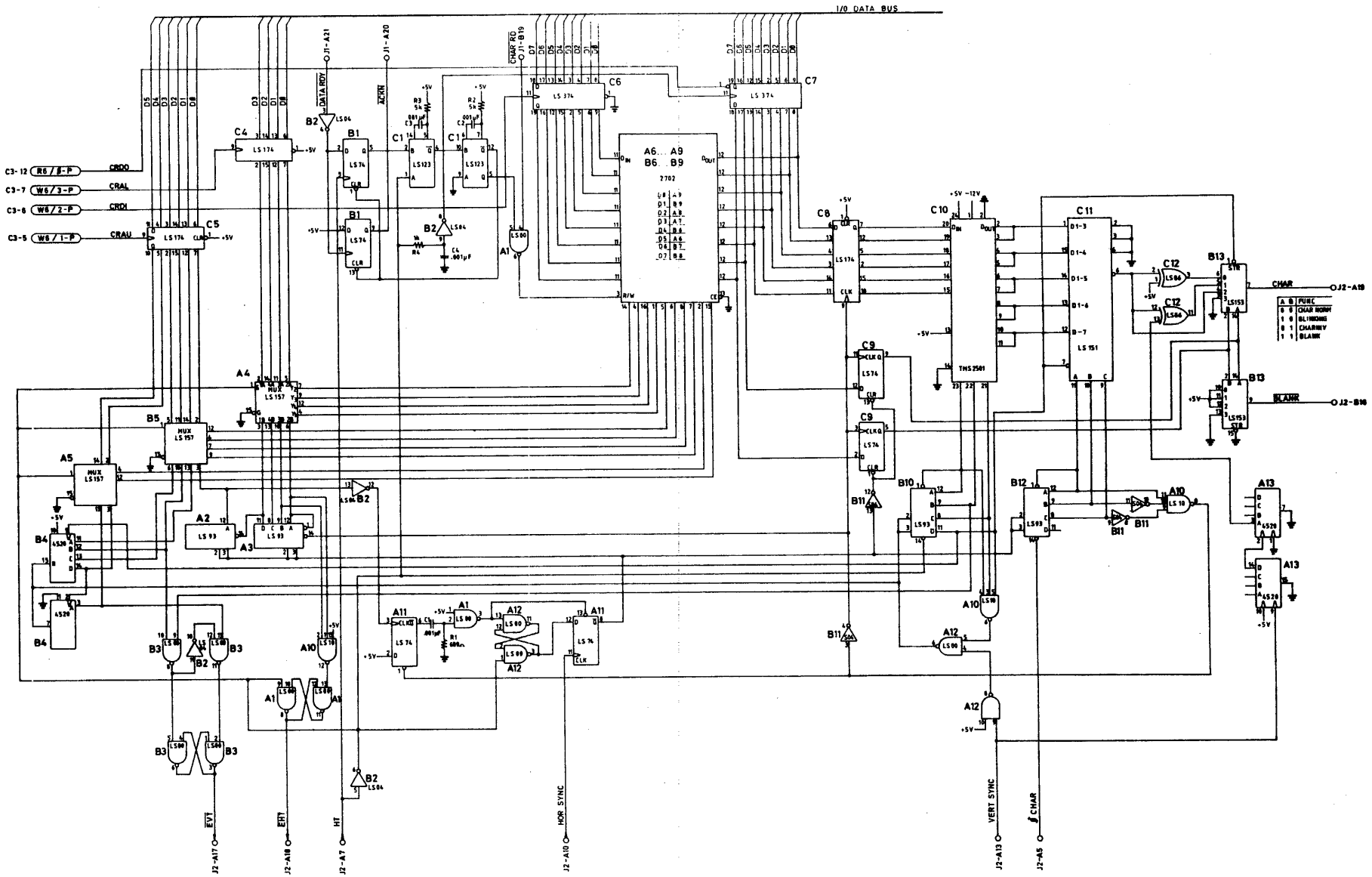

CHARACTER BOARD

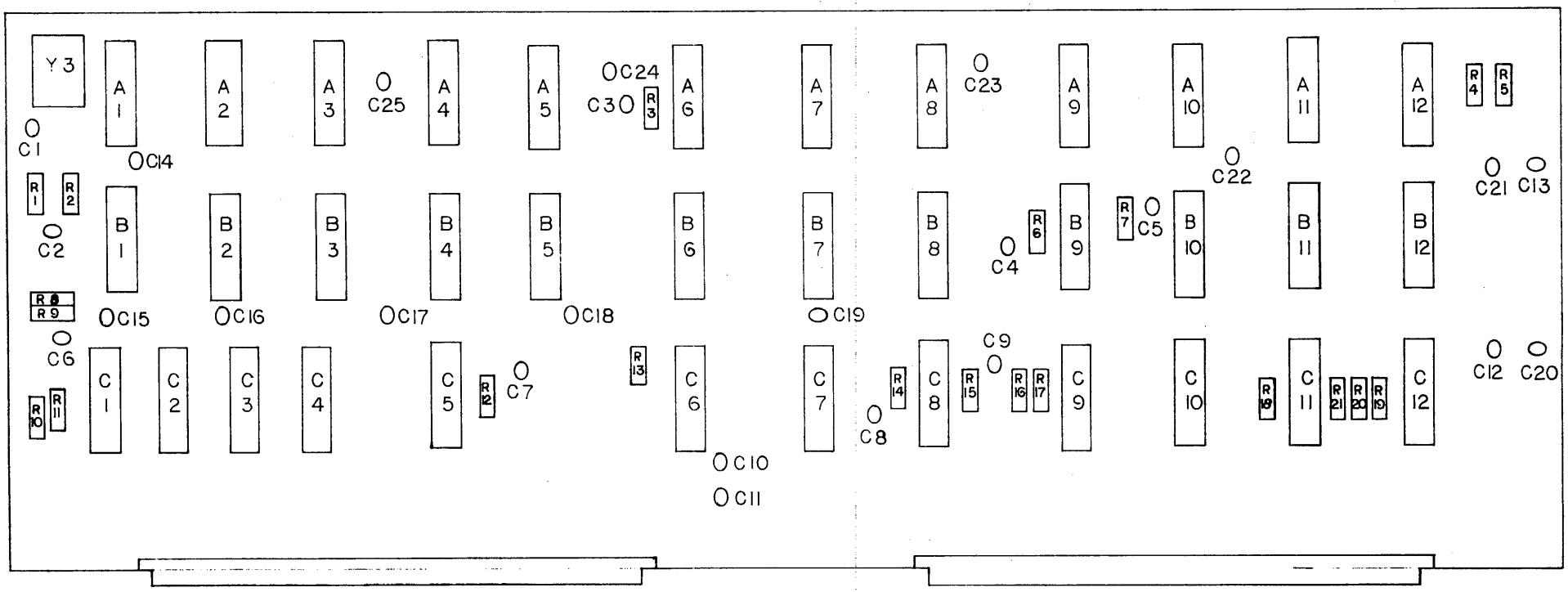

CODE	ERN	DATE	REVISIONS	NAME	D. ANGEL
				DATE	
				CHECK	
				DRAWN	

DOLCH LOGIC INSTRUMENTS

COUNTER BOARD

PART NUMBER: RCNT 4850 ASY

SHEET

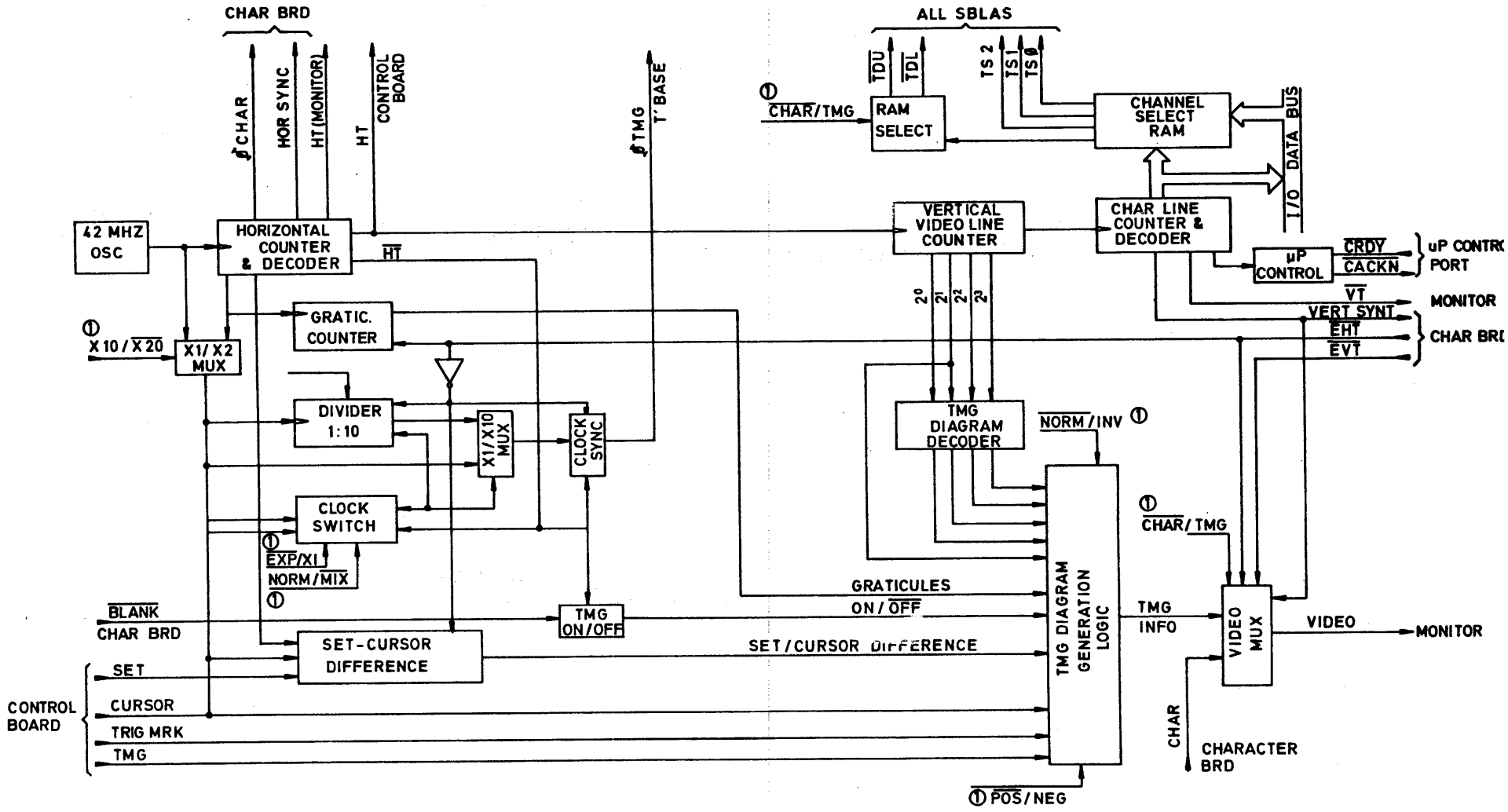

NOTES : ① FROM DCR (= DISPLAY CONTROL REGISTER)

RASTER COUNTER

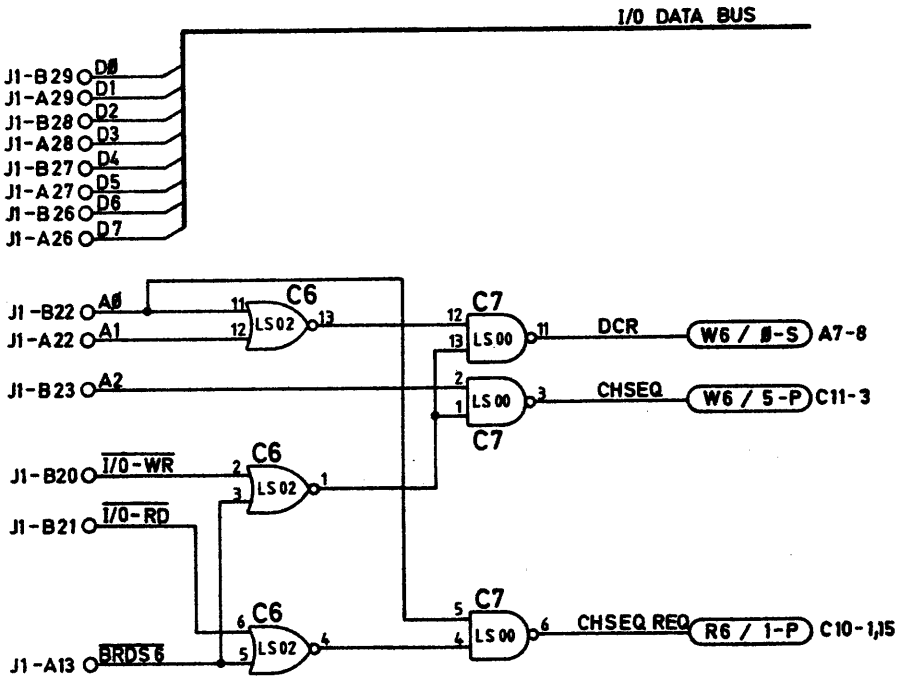

RASTER COUNTER

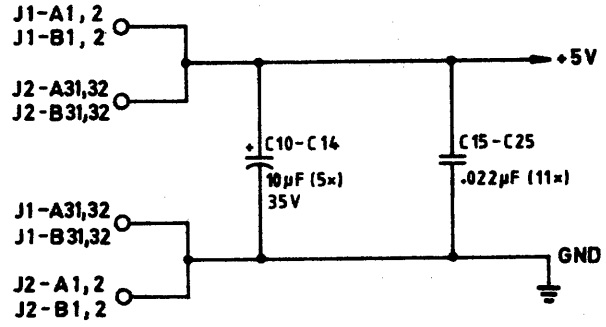

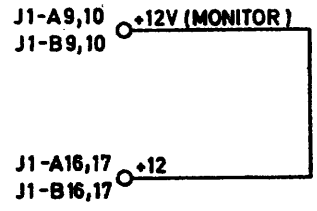

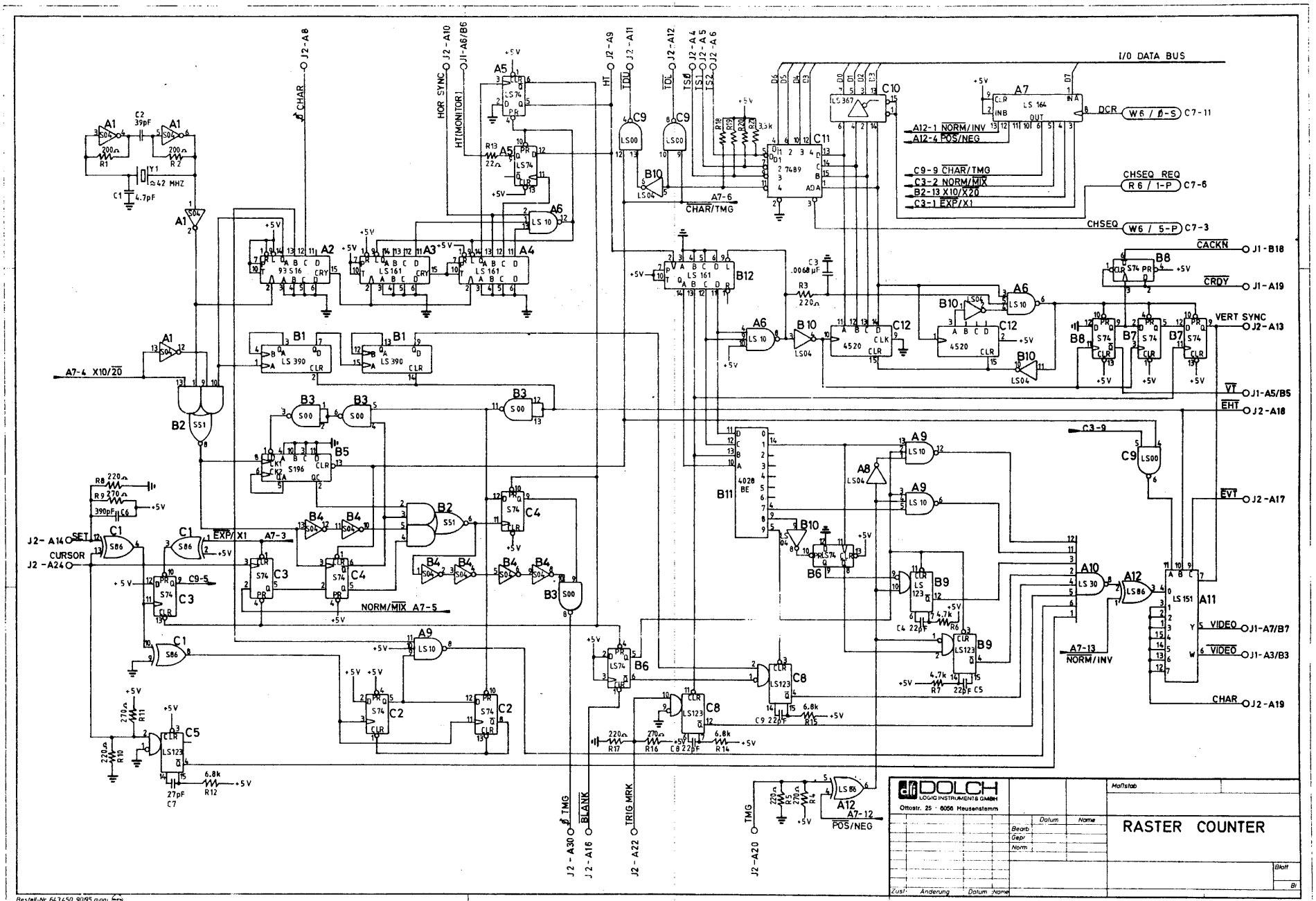
I/O DATA BUS
J2-A8
HOR SYNC
J2-A10
HT(MONITOR)
J1-A6/B6
HT
J2-A9
TDU
J2-A11
TDL
J2-A12
TS0
J2-A4
TS1
J2-A5
TS2
J2-A6
A12-1 NORM/INV
A12-4 POS/NEG
C9-9 CHAR/TMG
C3-2 NORM/MIX
B2-13 X10/X20
C3-1 EXP/X1
DCR
W6 / 8-S
C7-11
CHSEQ REQ
R6 / 1-P
C7-6
CHSEQ
W6 / 5-P
C7-3
A7-6
CHAR/TMG
CACKN
J1-B18
CRDY
J1-A19
VERT SYNC
J2-A13
VT
J1-A5/B5
EHT
J2-A18
EVT
J2-A17
VIDEO
J1-A7/B7
VIDEO
J1-A3/B3
CHAR
J2-A19
A7-4 X10/20
EXP/X1
A7-3
NORM/MIX A7-5
A7-13
NORM/INV
A7-12
POS/NEG
SET
J2-A14
CURSOR
J2-A24
C9-5
TMG
J2-A30
BLANK
J2-A16
TRIG MRK
J2-A22
TMG
J2-A20
DOLCH
LOGIC INSTRUMENTS GMBH
Ottostr. 25 · 6056 Heusenstamm
Maßstab
RASTER COUNTER
Datum
Name
Bearb.
Gepr.
Norm.
Blatt
Zust.
Änderung
Datum
Name
Bestell-Nr. 643450 90/95 gm

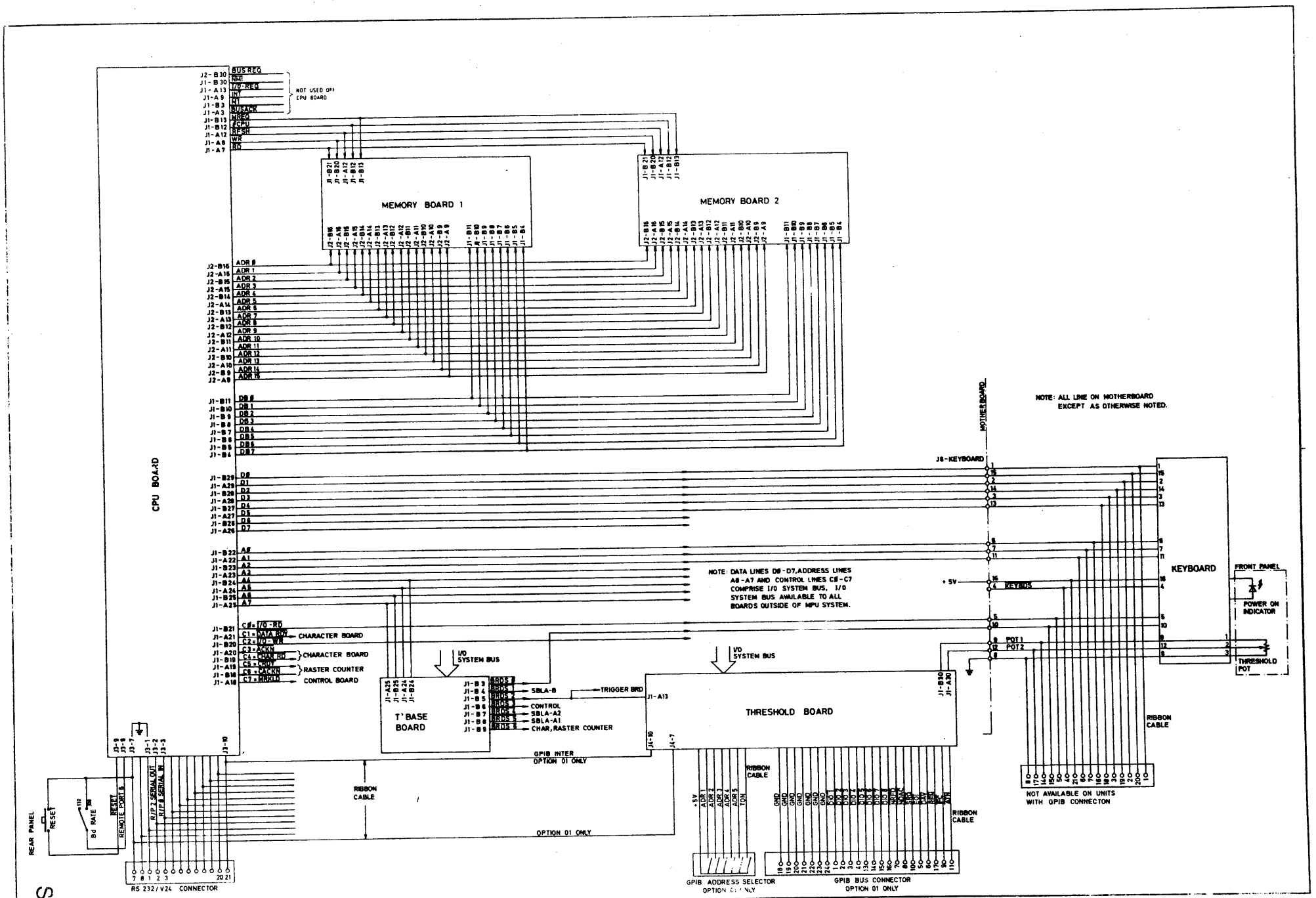
CPU BOARD
MEMORY BOARD 1
MEMORY BOARD 2
MOTHERBOARD
NOTE: ALL LINE ON MOTHERBOARD EXCEPT AS OTHERWISE NOTED.
NOTE: DATA LINES D0-D7, ADDRESS LINES A0-A7 AND CONTROL LINES C0-C7 COMPRISE I/O SYSTEM BUS. I/O SYSTEM BUS AVAILABLE TO ALL BOARDS OUTSIDE OF MPU SYSTEM.
J8-KEYBOARD
KEYBOARD
FRONT PANEL
POWER ON INDICATOR
THRESHOLD POT
+5V
POT1
POT2
CHARACTER BOARD
RASTER COUNTER CONTROL BOARD
T'BASE BOARD
I/O SYSTEM BUS
SBLA-0
TRIGGER BRD
CONTROL
SBLA-A2
SBLA-A1
CHAR, RASTER COUNTER
THRESHOLD BOARD
GPIB INTER OPTION 01 ONLY
RIBBON CABLE
NOT AVAILABLE ON UNITS WITH GPIB CONNECTON
REAR PANEL
RESET
Bd RATE
RS 232/V24 CONNECTOR
GPIB ADDRESS SELECTOR OPTION 01 ONLY
GPIB BUS CONNECTOR OPTION 01 ONLY
OPTION 01 ONLY

DOLCH
LOGIC INSTRUMENTS, INC.
2180 Bering Drive • San Jose • California 95131 • Tel. (408) 946-6044