Textbook for Vocational Training – Materials Science for Metalworking Trades

Table of Contents

Textbook for Vocational Training – Materials Science for Metalworking Trades **1**
1. Chemical Fundamentals 1
1.1. General Remarks 1
2. Non–Metals 13
2.1. Oxygen (symbol O, valence II) 13
2.2. Hydrogen (Symbol H, Valence I) 18
2.3. Nitrogen (Symbol N, Valence I, II, III, IV, V) 24
2.4. Carbon (Symbol C, Valence II, IV) 26
2.5. Acids 33
2.6. Lyes 38
2.7. Salts 41
3. Metals and Alloys 45
3.1. General Remarks 45
3.2. Testing of Metallic Materials 53
3.3. Ferrous Metals 63
3.4. Non–Ferrous Metals 99
3.5. Alloys of Non–Ferrous Metal 109
3.6. Hard Metals 114
4. Corrosion 115
4.1. General Remarks 115
4.2. Chemical Corrosion 116
4.3. Electrochemical Corrosion 117
4.4. Corrosion Protective Coatings 119
5. Plastics 122
5.1. General Remarks 122
5.2. Organic Chemistry 122
5.3. Classification of Plastics 127
5.4. Plastics Made of Natural Raw Materials 128
5.5. Plastics Made of Synthetic Raw Materials 130
6. Lubricants and Coolants 140
6.1. Lubricants 141
6.2. Coolants 142

Textbook for Vocational Training – Materials Science for Metalworking Trades

Lehr– und Lernmittel,
Informationen, Beratung

Educational Aids
Literature, Consulting

Moyens didactiques,
Informations, Service–conseil

Material didáctico,
Informaciones, Asesoría

CRYSTAL

Feedback: IBE e.V.
92–34–0102/2

Deutsche Gesellschaft für
Technische Zusammenarbeit (GTZ) GmbH

Institut für berufliche Entwicklung e.V.
Berlin

Original title:
Lehrbuch für die Berufsausbildung
“Werkstoffkunde – Metall”

Author: Wolfgang Wosnizok

First edition © IBE

Institut für berufliche Entwicklung e.V.
Parkstraße 23
13187 Berlin

Order No.: 92–34–0102/2

1. Chemical Fundamentals

1.1. General Remarks

1.1.1. The objectives of Chemistry

Chemistry is a science concerned with the study of all substances encountered in nature. It establishes the properties of the substances and the conditions under which they change. Consequently, it furnishes the fundamental knowledge of the different substances that are used as materials in production.

1.1.2. Substance and Material

In spite of their differing size and shape the sickle, the share of a plough, the hammer or the blade of a knife, are all mode of the same substance, namely steel.

Window panes, glass bottles or the bulb of an electric lamp are all made of the same substance, namely glass.

Tables, chaire and benches are usually all made of wood.

The term substance defines what a body or object is made of. An alternative term that is frequently employed is material.

Since there are solid, liquid and gaseous bodies, it follows that there are also solid, liquid and gaseous substances.

Substances such as wood, leather, steel, copper or aluminium that are processed by man, converting them manually or with the help of tools and machines into workpieces or finished products, are called materials.

A skilled worker must know the properties of the materials that he is processing, the materials of this tools or of the parts he is mounting. For instance, he must know that cast iron is brittle and must not be subjected to bends and tensions because it will then easily break.

Knowledge of the properties of materials is an essential element of the qualifications of a skilled worker.

Materials technology is concerned with the origin, production and processing of raw materials (e.g. ores, coal, petroleum), and how they are refined into useful raw materials endowed with the required properties.

1.1.3. Physical and Chemical Processes

Physical changes due to heat: By switching on the light electric current flows through the thin metal filament inside the bulb, causing it ot become white hot – incandescent – and thereby radiate light. The filament becomes cold again when the electric current is switched off, allowing it to return to its original state.

Temporary alteration of properties of substances is a physical process.

Chemical changes due to heat: Magnesium is a metal. If a magnesium filament is held in a flame it will burn, radiating a brilliant white light. The residue is a white powder, known as magnesium (fig. 1.1.). The white powder is not transformed back into metal after combustion. A new substance with new properties has been formed.

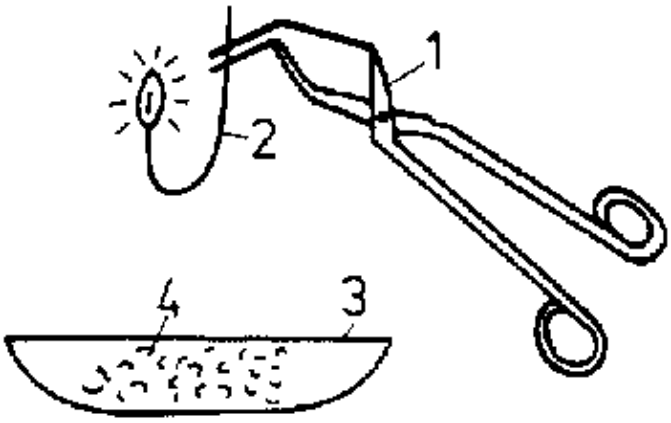

Fig. 1.1. Combustion of magnesium.

1 Crucible tongs; 2 magnesium strip; 3 porcelain dish; 4 white powder; magnesia is the new substance

Permanent alteration of a substance defines a chemical process.

Substances influence each other. If a nail is placed in water one will see after a few days that it has become covered by a reddish–brown, friable coat. This is rust. If the water is changed daily the entire nail will be eventually converted into rust after a lengthy period. Rust is the new substance with new properties.

Wine will keep in a closed bottle for a long time. But if it is exposed to the air for a longer period it will take on an acidic taste, i.e. vinegar has been formed. Vinegar is the new substance with new properties.

1.1.4. Mixed Substances

Production of mixed substances: A beaker is filled with fine sand to one third of its capacity. This is then topped up with fine common salt (fig. 1.2). The salt is evenly distributed in the sand by shaking, creating a mixture of sand and common salt. The individual grains of sand and salt within the mixture can be discerned through a magnifying glass.

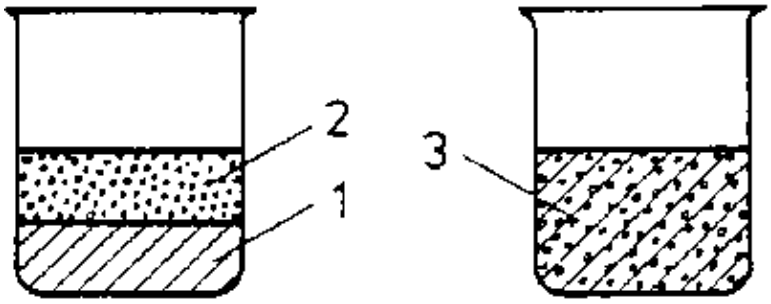

Fig. 1.2. Mixture of sand and common salt.

1 sand; 2 common salt; 3 sand/salt mixture

A greyish–green powder is obtained when one mixes iron filings with sulphur powder. This is a mixture of iron and sulphur. Here, too, the iron filings and the sulphur particles can be clearly distinguished through a magnifying glass.

By stirring chalk powder into a beaker filled with water one obtains a milky fluid, i.e. the fine chalk particles are finely distributed in the water. A drop of this mixture can be placed on a glass plate for observation through a magnifier to reveal the chalk particles suspended in the drop of water.

A mixture of substances consists of particles that are present next to each other in a varying degree of distribution. The characteristic properties of the component parts, however, are retained (fig. 1.3.).

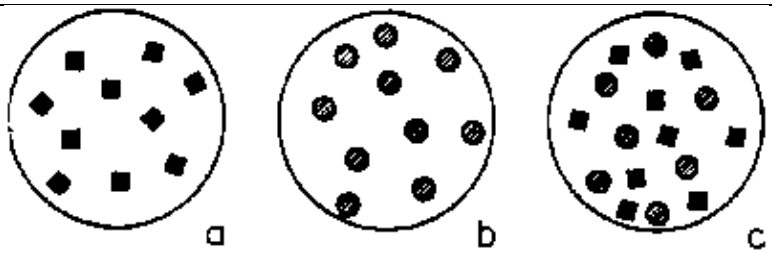

Fig. 1.3. Schematic representation of the formation of a mixture.

a) substance A; b) substance B; c) mixture of the substances A and B

The raw materials furnished by nature are often not pure substances, but rather substance mixtures. Thus, ores are a mixture of different metals and other substances.

Separation of substance mixtures: The differing properties of the individual substances are exploited for the separation a mixture into its individual component substances.

Separation of the sand–salt mixture: Sand is insoluble in water, as opposed to common salt that dissolved in water. These properties can be utilized to separate the mixture (fig. 1.4).

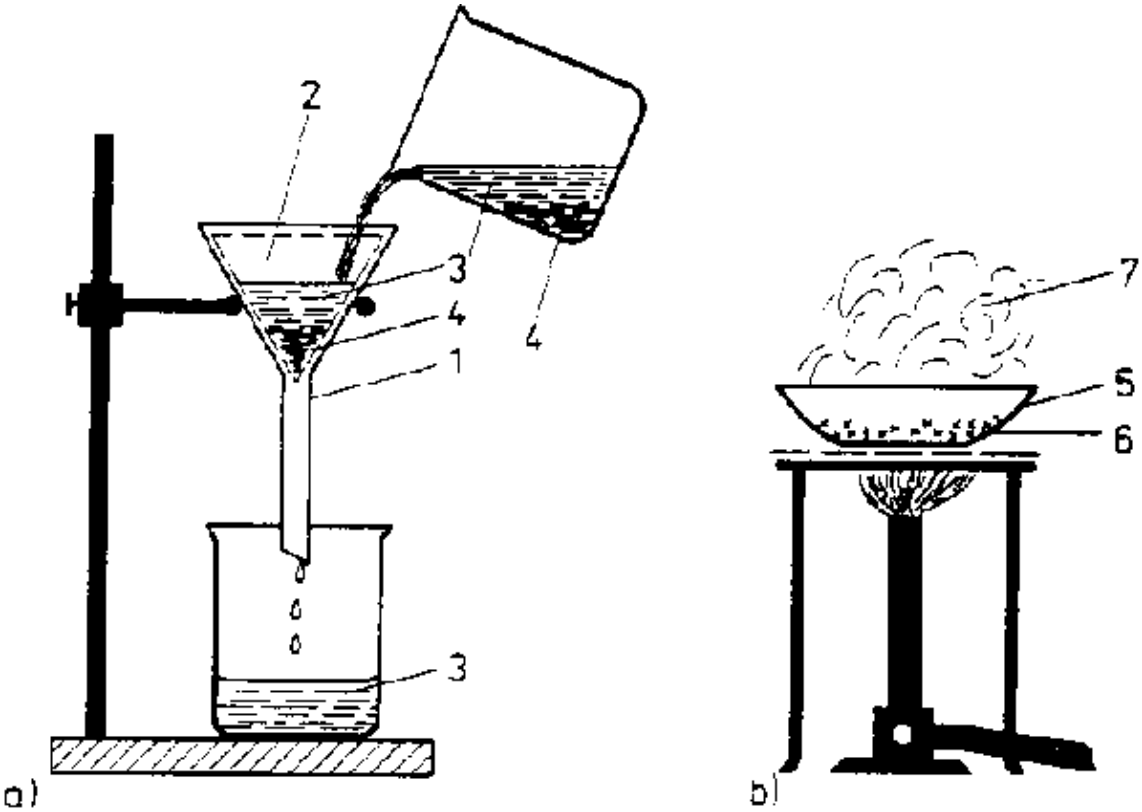

Fig. 1.4. Separation of the sand/salt mixture.

a) Common salt is soluble in water. Sand and salt solution are separated by filtration.

1 funnel; 2 filter; 3 salt solution; 4 sand;

b) Common salt solution is heated to boiling point. The water evaporates leaving salt as a residue in the porcelain dish.

5 porcelain dish; 6 residue: salt; 7 steam

If the water is to be recovered it will have to be distilled (fig. 1.5.).

Separation of the iron–sulphur mixture: Iron is attracted by a magnet, while sulphur is not. Consequently, the iron can be separated from the sulphur with the help of a magnet (fig. 1.6).

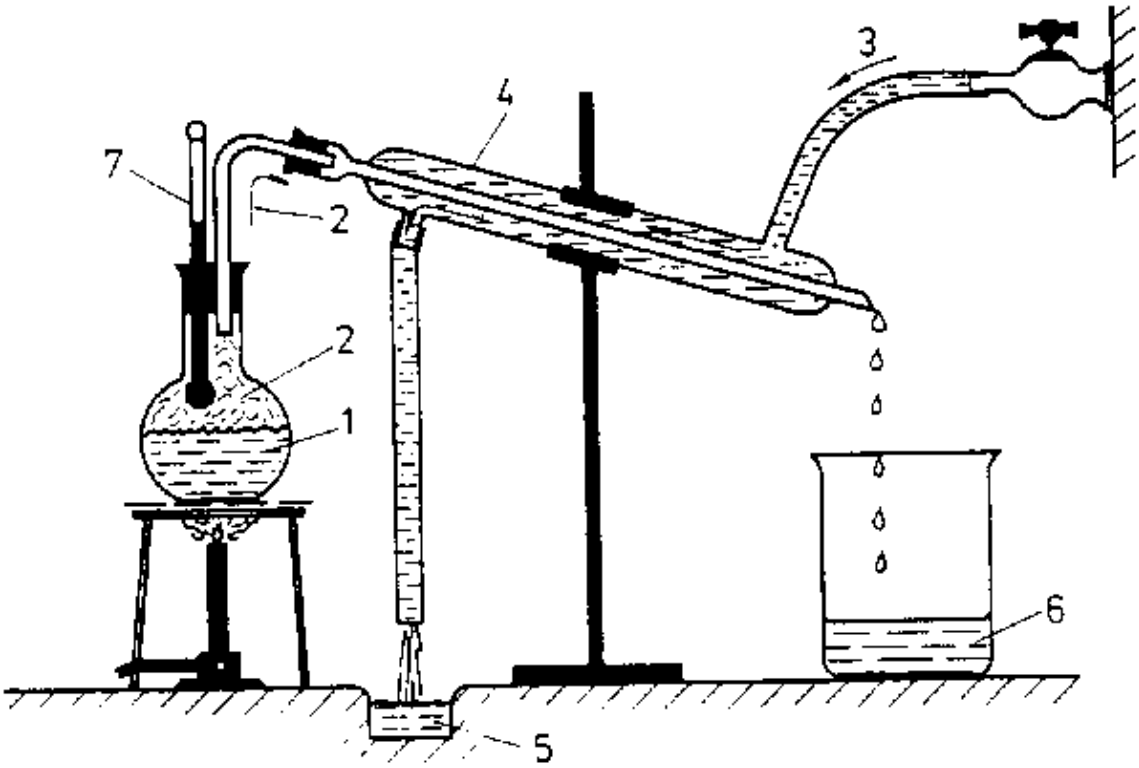

Fig. 1.5. Distillation

1 common salt solution; 2 steam; 3 cooling water; 4 cooler; 5 water flow−off; 6 distilled water; 7 thermometer

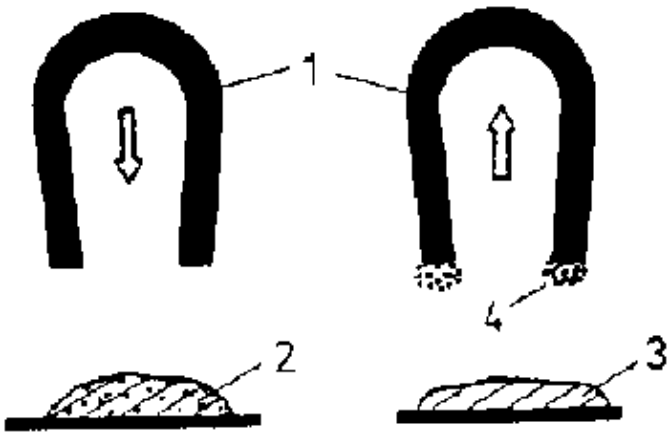

Fig. 1.6 Magnetic separation of iron/sulphur mixture.

1 magnet; 2 mixture of iron and sulphur; 3 sulphur; 4 iron powder

When the iron−Sulphur mixture is shaken in water a yellow powder will rise to the top because sulphur is not wetted by water. An air cover is formed around each particle of sulphur which gives the particles buoyancy like a swimming belt. The dark iron powder sinks to the bottom (fig. 1.7).

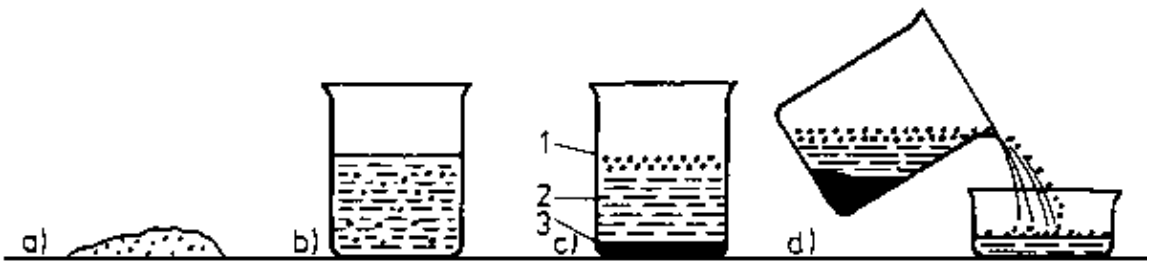

Fig. 1.7. Separating an iron/sulphur mixture by stirring in water.

a) Iron/sulphur mixture; b) Mixture stirred in water; c) Iron powder sinks to the bottom; sulphur rises to the top; d) Sulphur is poured off 1 sulphur; 2 water; 3 iron powder

Separation of chalk–water mixture: If this mixture is allowed to stand for a while the chalk powder will sink to the bottom so that the water can be poured off. (fig. 1.8.)

If one does not wish to wait until the chalk has sunk to the bottom of the beaker one can use a filter. Unsized paper (blotting paper) is used as a filtering medium. It acts like a very fine–meshed sieve. The water can flow through the pores, while the chalk cannot, thus retaining the chalk as residue in the filter.

1.1.5. Synthesis

A process by which two or more substances are united into a new substance is known as synthesis

• Test 1.1: Production of iron sulphide

4 g of sulphur powder are mixed with 7 g of iron powder. The mixture is filled into a test–tube. The filled test–tube is then heated over a gas flame. The mixture will soon start to glow at the point where it is being heated. The test–tube is taken out of the flame. Glowing will continue, eventually embracing the entire mixture. The resulting heat will be so high that the test–tube will crack at several points (fig. 1.8).

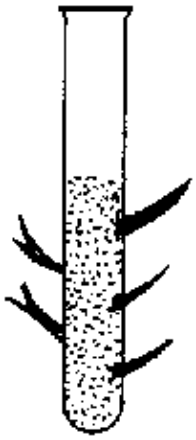

Fig. 1.8.

The iron/sulphur mixture glows intensely. Long flames shoot out of the test–tube.

After the mixture has been allowed to cool off the test–tube is broken revealing a black rod.

• Test 1.2: Examining the black substance

Part of the black rod is ground into powder which is then studied under a magnifying glass. A homogeneous dark substance will be seen. The substance is not attracted by a magnet. The powder is poured into water. No sulphur will rise to the surface of the water.

Sulphur and iron have united into a new substance with new properties. This new substance is called iron sulphide.

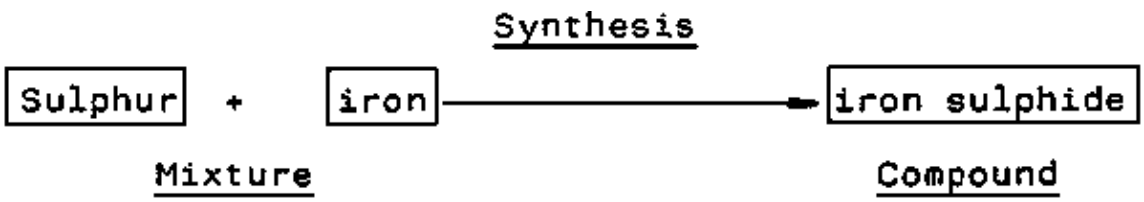

1.1.6. Analysis

Analysis involves the resolution of a compound into its component parts.

• Test 1.3.: Mercuric oxide

Mercuric oxide is a red powder. It is filled into a test–tube and heated to over 400°C. Small silver droplets soon precipitate on the glass walls of the test–tube. Eventually, they unite to form a silver mirror.

If a glowing splint of wood is inserted in the mouth of the test–tube it will burst into a brilliant flame (fig. 1.9).

Mercuric oxide separates into two substances when it is exposed to heat. One substance is mercury, while the other is a colourless gas that promotes combustion. This gas is called oxygen.

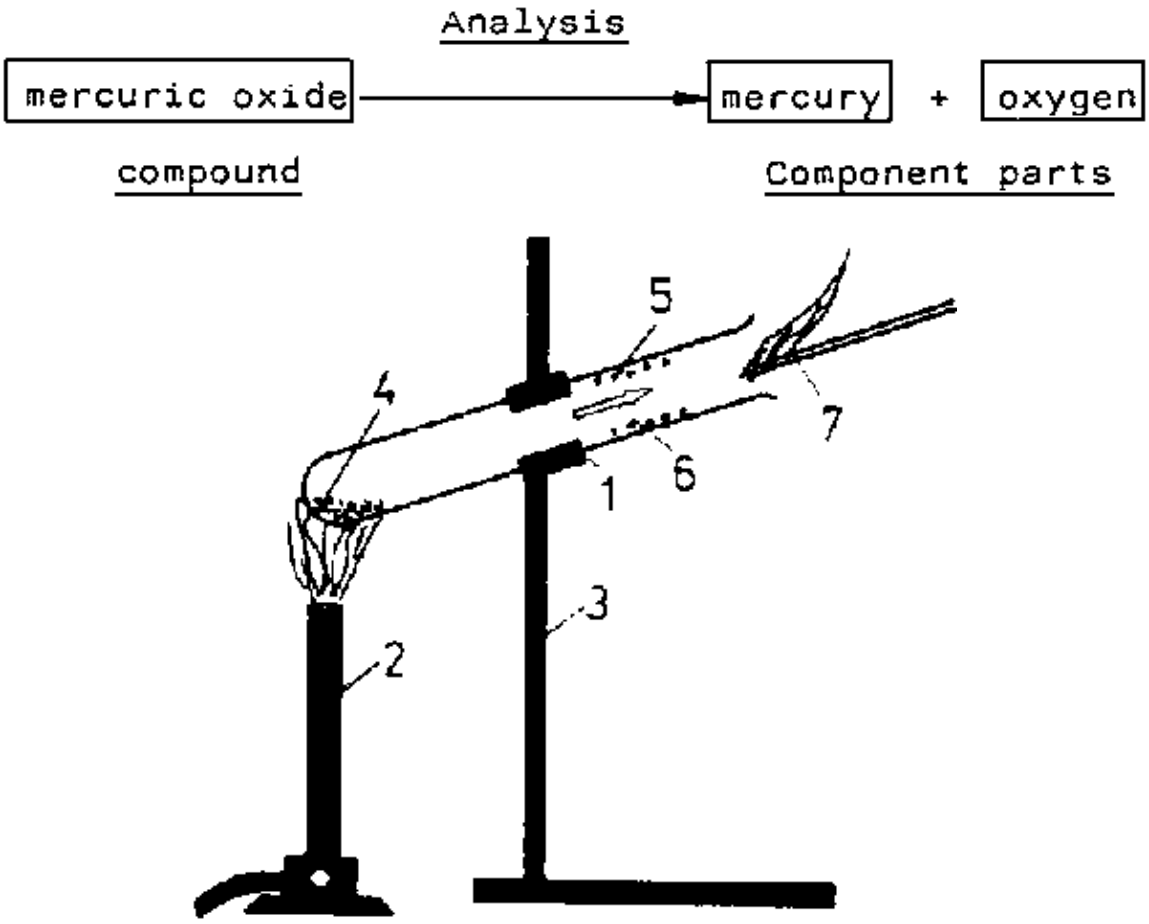

Fig. 1.9 Analysis of mercuric oxide.

1 test–tube; 2 Bunsen burner; 3 tripod; 4 mercuric oxide; 5 mercury droplets; 6 oxygen; 7 glowing splint bursts into flames

1.1.7. Elements

It is imaginable that the substances gained from analysis, namely mercury and oxygen, can be resolved into still further substances. Numerous tests, however, show that this is impossible.

Substances that cannot be chemically decomposed into other substances are called elements.

Examples of elements are: copper, silver, iron, tin, sulphur, carbon and iodine.

Elements are classified into metals and non–metals.

The characteristics of metals are metallic gloss and good conductivity to heat and electrical current.

Elements that do not feature these characteristics of metals are known as non–metals.

1.1.8. Symbols, Formulas and Equations

International symbols are used to define elements and compounds in a brief and uniform manner. The symbols consist of the first latter, and sometimes also the second letter, of the Latin or Greek name of the element, Examples:

Element	Latin name	Symbol
Oxygen	oxygenium	O
Sulphur	sulfur	S
Iron	ferrum	Fe
Copper	cuprum	Cu

The symbols of the individual elements of which compounds are composed of are written one after the other to define a chemical compound. If a compound consists of metals and non–metals, the symbol for the metal will always stand at the beginning.

Examples:

Mercuric oxide HgO Iron sulphide FeS

Abbreviations consisting of two or more symbols are known as formulas.

The individual symbols and formulas are arranged into chemical equations to express a chemical process. Hence:

Fe + S ? FeS

2 HgO ? 2 HgO + O_2

Initial substances Final substances

The arrow indicates the direction of the chemical reaction.

1.1.9. Atoms and Molecules

Sulphur can be crushed into a fine dust in a morter (fig. 1.10). The individual dust particles are clearly discernible under a microscope. Each individual particle has all the properties of sulphur. These small sulphur particles can be reduced still further with suitable mechanical tools. But from many tests and observations it is known that there is a limit to particle reduction.

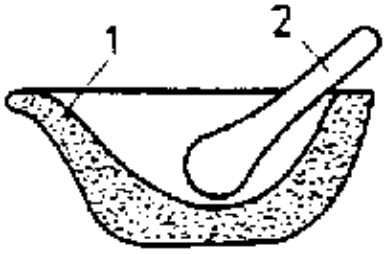

Fig. 1.10.

1 mortar; 2 pestle

The smallest particle of an element that still has all the properties of the element concerned is known as an atom.

Atoms are so small that they cannot be made visible, even under the most powerful microscopes.

The atoms of an element all have the same properties, i.e. the same size and the same mass. There are just as many different atoms as there are elements.

Nowadays, we have a relatively clear concept of the atoms. One knows how many atoms are present in a certain volume of a substance, their diameter and atomic mass. Thus, one cubic centimeter of the oxygen derived from the analysis of mercuric oxide contains 50 000 000 000 000 000 000 atoms. The mass of an oxygen atom is about 0.000 000 000 000 000 000 000 001 g. It is impossible for us to imagine these figures.

If it were possible to inflate the individual atoms contained in a single cubic centimeter of oxygen to the volume of one cubic millimeter (approximately the size of a pin head), and to distribute these 'inflated' atoms uniformly over the Mediterranian Sea, then they would cover the Mediterranian Sea in a 2 cm thick layer of 'inflated atoms'.

Scientists calculate with these unimaginable figures to gain an increasingly accurate insight into the structure of substances. Today, we know that atoms are composed of electrically charged particles. A positively charged atomic nucleus is circled by negatively charged particles – the electrons – at enormous speed (fig. 1.11).

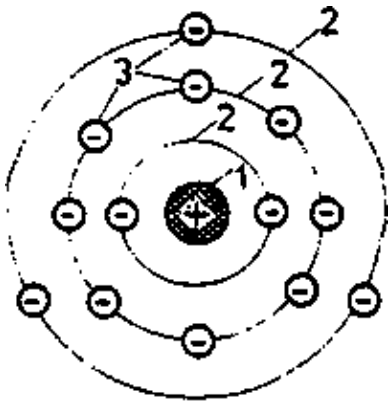

Fig. 1.11. Model of an aluminium atom.

1 atom nucleus;
2 electron path;
3 electrons

If one were to divide the iron sulphide produced in Test 1.1. right down to the limits of its mechanical divisibility, one would obtain a very small particle, so small that it would be invisable even under the best optical aids. Yet this minute particle still has all properties of iron sulphide. It is a compound consisting of one atom of iron and one atom of sulphur.

The smallest particle of a chemical compound is a molecule.

Molecules are composed of the atoms of the elements that make up the chemical compound concerned.

Molecules cannot be mechanically divided, but they can be chemically divided into atoms. Such a chemical division results in substance changes.

The notation of chemical formulas and equations must not only specify the symbols of the elements involved in a compound, but should also indicate their quantitative composition within the molecules.

The symbol Fe means that a single atom of iron is present. The symbol S means that a single atom of sulphur is present. Hence, the formula FeS means a single molecule of iron sulphide.

The equation Fe + S ? FeS indicates that a single atom of iron is bonded with a single atom of sulphur to form a molecule of iron sulphide.

The equation HgO ? Hg + O indicates that a molecule of mercuric oxide is divided into a single atom of mercury and a single atom of oxygen.

The compounds listed hitherto always involved a single atom of one element bonded with a single atom of another element to form a molecule. But the situation can also arise in which an atom of one element can be bonded with several atoms of another element to form a molecule.

Examples:

2 atoms of hydrogen and 1 atom of oxygen form water H_2O

3 atoms of hydrogen and 1 atom of nitrogen form ammonia NH_3

4 atoms of hydrogen and 1 atom of carbon form methane CH_4

These examples reveal that the element hydrogen H dominates, i.e. a differing number of hydrogen atoms H are present in the molecules of the compounds. A special property of elements is their ability to bind a certain number of hydrogen atoms.

This property is known as valence.

The valence is often indicated by lines within the formula.

Examples:

HCL	H_2O	NH_3
H–Cl	H–O–H	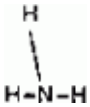
Hydrochloric acid	Water	Ammonia
Chlorine is univalent	Oxygen is bivalent	Nitrogen is tervalent

Since NaCl is the formula for common salt, and since chlorine is univalent, one can deduce that sodium Na is univalent too.

A comparison of the formula of common salt with that of hydrochloric acid will reveal that the common salt molecule is formed from the molecule of hydrochloric acid if the hydrogen atom H of the hydrochloric acid molecule is replaced by a sodium atom Na. Sodium is univalent because it can replace one hydrogen atom H.

Example:

Na–Cl	H–Cl
Common salt	Hydrochloric acid
Sodium is univalent	Chlorine is univalent

The valence of an element specifies the number of hydrogen atoms that can be bonded to a certain element or that can be replaced in another compound.

The gaseous elements hydrogen, oxygen and nitrogen exist in the unbound state only in the form of a molecule.

Example:

H + H ? H_2
O + O ? O_2
N + N ? N_2

This fact has to be taken into account for reaction equations. Let us, therefore, consider the reaction equation for the analysis of mercuric oxide:

$H_gO + H_gO$? $H_g + H_g + O + O$
$2\ H_gO$? $2\ H_gO_2$

The following rules apply to <u>reaction equations:</u>

• The Arabic numeral in front of a formula defines the number of molecules present in a compound.

• The Arabic numeral in front of a symbol defines the number of atoms of the element concerned

• The small Arabic (index) numeral behind a symbol defines the number of atoms of the element concerned within the molecules.

For instance, the formula Fe_2O_3 reveals that the molecule consists of two atoms of iron Fe and three atoms of oxygen O.

Table 1.1. The most important chemical elements

Name	Symbol	Valence	Kind and state
Aluminium	Al	3	light metal (solid)
Bromine	Br	1	non–metal (liquid)
Calcium	Ca	2	light metal (solid)
Carbon	C	2, 4	non–metal (solid)
Chlorine	Cl	1	non–metal (gas)
Chromium	Cr	3, 6	heavy metal (solid)
Copper	Cu	2	heavy metal (solid)
Fluorine	F	1	non–metal (gas)
Gold	Au	3	heavy metal (solid)
Helium	He	0	noble gas (does not enter into any compound)
Hydrogen	H	1	non–metal (gas)
Iodine	I	1	non–metal (solid)
Iron	Fe	2, 3	heavy metal (solid)
Lead	Pb	2	heavy metal (solid)
Magnesium	Mg	2	light metal (solid)
Manganese	Mn	2, 4, 7	heavy metal (solid)
Mercury	Hg	1, 2	heavy metal (liquid)
Nickel	Ni	2	heavy metal (solid)
Nitrogen	N	3, 5	non–metal (gas)
Oxygen	O	2	non–metal (gas)
Phosphorus	P	3, 5	non–metal (solid)
Platinum	Pt	2, 4	heavy metal (solid)

Potassium	K	1	light metal (solid)
Silver	Ag	1	heavy metal (solid)
Sodium	Na	1	light metal (solid)
Sulphur	S	2, 6	non−metal (solid)
Tin	Sn	2, 4	heavy metal (solid)
Zinc	Zn	2	heavy metal (solid)

Exercises and Questions

1.1. Explain the difference between physical and chemical processes.

1.2. Is the evaporation of water a chemical or physical process?

1.3. What kind of process is the rotting of wood or the rusting of nails?

1.4. Why are combustion processes chemical processes?

1.5. What is a mixture?

1.6. How would you separate a mixture of sand and saw dust?

1.7. How would you separate a mixture of sand and iron filings?

1.8. How can you separate the salt out of hydrochloric acid?

1.9. Describe the set−up of a distillation assembly

1.10. For what purpose is a filtering medium used?

1.11. What is synthesis?

1.12. Give examples of synthesis

1.13. What is analysis?

1.14. What is obtained from the analysis of iron sulphide?

1.15. How can you prove the presence of the invisible gas oxygen?

1.16. What is an element?

1.17. How are elements classified?

1.18. To which group of elements do oxygen and sulphur belong?

1.19. How do non−metals differ from metals?

1.20. What is a chemical symbol?

1.21. What are the chemical symbols for the elements iron, oxygen and sulphur?

1.22. What are atoms?

1.23. What are molecules?

1.24. What does the symbol Fe stand for?

1.25. What does the formula H_2O mean?

1.26. What can you deduct from the equation

$2\ Ag + S$? Ag_2S?

1.27. What can you deduct from the equation

$2\ Mg + O_2$? $2\ MgO$?

2. Non–Metals

2.1. Oxygen (symbol O, valence II)

2.1.1. Sources

Elementary oxygen is a component of the air. Our ambient air is a gas mixture. One fifth of this mixture consists of oxygen, while the remaining part of the mixture is mainly nitrogen.

Water is a chemical compound composed of oxygen and hydrogen. 1000 kg of water contain 890 kg of oxygen and 110 kg of hydrogen that are chemically bonded.

Iron ore is a compound of oxygen and iron.

Clean white sand is a compound of oxygen and silicon.

Alumina is a compound of oxygen and aluminium.

2.1.2. Derivation

The most important industrial process for the production of oxygen is the separation of oxygen from the gaseous mixture air. For this purpose the air is liquified. Air has to be cooled to very low temperatures to convert it to its liquid state. Special machines are used to cool the air. Air is liquified at a temperature of –192°C. The temperature at which the individual gases are liquified differs which each gas contained in the air mixture. Liquid nitrogen boils and evaporates at a temperature of –196°C, as opposed to oxygen where boiling and evaporation takes place at a temperature of –183°C. This difference of 13°C is exploited to separate the gas mixture.

If liquid air is poured into any kind of vessel it will start to boil violently and will evaporate very quickly. Only the nitrogen evaporates during this process so that the liquid air becomes increasingly richer in its oxygen content. This property is exploited in the construction of special apparatus for air splitting.

To produce smaller quantities of oxygen in the laboratory, oxygen–rich chemical compounds are employed which will readily yield the oxygen they contain when they are heated. Typical compounds in this category are mercuric oxide (HgO), potassium chlorate ($KClO_3$), and potassium permanganate ($KMnO_4$). The decomposition of mercuric oxide was already explained in Section 1.1.6. The presence of oxygen can always be indicated by a glowing splint of wood that will immediately burst into flames as soon as it comes into contact with oxygen. The oxygen liberated from the compound is captured by diverting it into an upside vessel that is filled with water (fig. 2.1). The rising oxygen will displace the water out of the vessel as the top of the vessel becomes filled with oxygen.

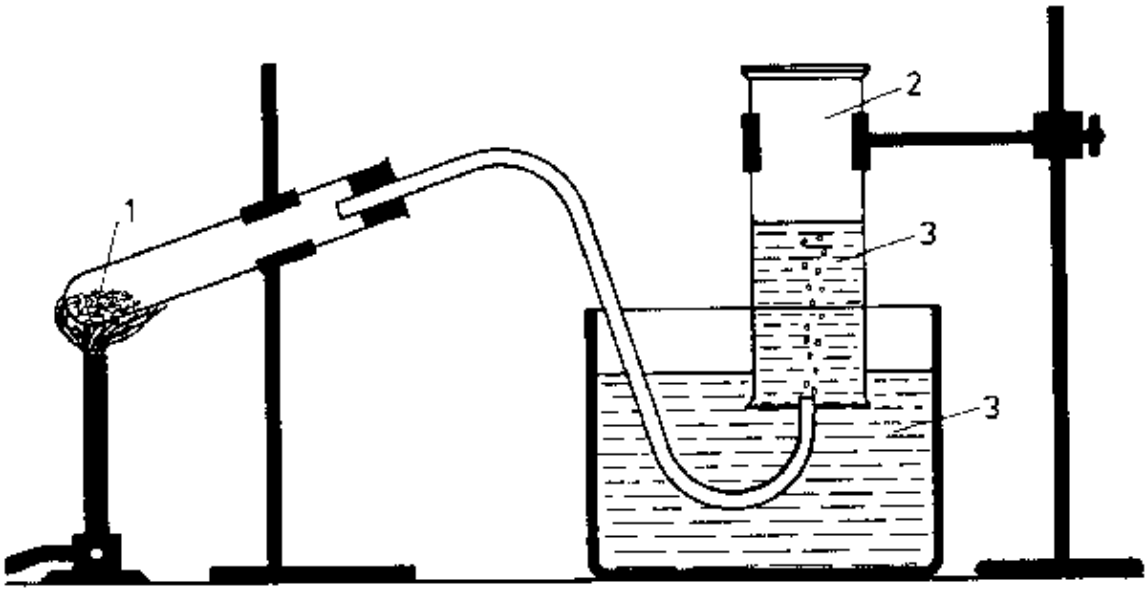

Fig. 2.1. Producing oxygen from potassium chlorate.

1 potassium chlorate; 2 oxygen; 3 water

2.1.3. Properties

• Test 2.1.: Burn sulphur in oxygen

Sulphur, heaped on an iron spoon, is ignited and then held in a vessel that is filled with oxygen. The sulphur will immediately burn violently, emitting a whitish–blue light (fig. 2.2.).

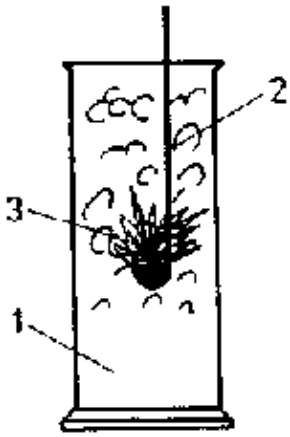

Fig. 2.2.

Sulphur burns with a bright flame in the presence of oxygen.
1 oxygen; 2 combustion spoon; 3 sulphur flames

$S + O_2$? SO_2

sulphur + oxygen sulphur dioxide

The gas resulting from the combustion has the same unpleasant and stinking small as when sulphur is burnt in the air.

• Test 2.2.: Burn iron in oxygen

A glowing iron wire is immersed in oxygen (fig. 2.3.). It burns under violent spattering of sparks.

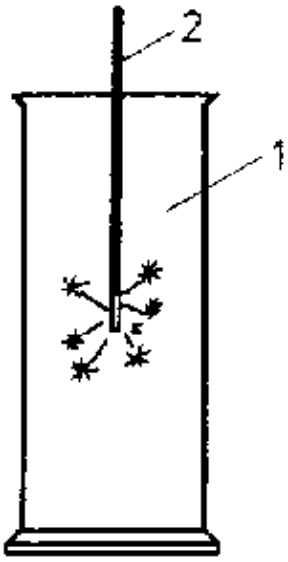

Fig. 2.3. Glowing iron wire burns in oxygen.

1 oxygen; 2 iron wire

$3\ Fe + 2\ O_2$? Fe_3O_4

iron + oxygen ? iron oxide

<u>Properties of oxygen:</u>

- Oxygen is colourless, odourless and tasteless
- Oxygen is incombustible
- Oxygen promotes combustion
- Oxygen in the air is diluted by nitrogen which is the reason why combustion processes in the air proceed at a slower rate than in the presence of pure oxygen.
- Combustion in the air produces the same compounds as in pure oxygen

A substance is bonded with oxygen in every combustion process. The contamination of a substance with oxygen is known as oxidation. The substance resulting from this synthesis is called an oxide.

2.1.3.1. Nomenclature of Non–Metallic Oxides

Non–metallic oxides derive their name from the number of oxygen atoms contained in a molecule after a substance has been oxidized. The number of oxygen atoms present in the molecule is indicated by placing a corresponding Greek numeral in front of oxide.

No. of atoms:	1	2	3	4	5
Nomenclature:	–mon–oxide	–di–oxide	–tri–oxide	–tetra–oxide	–pent–oxide

Examples:

SO_2 sulphur dioxide

SO_3 sulphur trioxide

CO	carbon monoxide
CO_2	carbon dioxide
P_2O_5	phosphorous pentoxide

2.1.3.2. Nomenclature of Metal Oxides

There are metals that bond with oxygen at different valance levels. That is why the valence of metals is indicated by Roman figures which are placed in brackets and inserted within the name of the compound.

Examples:

FeO:	Iron(II)–oxide; iron is bivalent
Fe_2O_3:	Iron(III)–oxide; iron is tervalent
Cu_2O:	Copper(I)–oxide; copper is univalent
CuO:	Copper(II)–oxide; copper is bivalent

The valence of metals of constant valency is not included in the name of the oxide.

Examples:

Al_2O_3:	Aluminium oxide
ZnO:	Zinc oxide

2.1.4. Uses

Oxygen is used in medicine and industry. Life without oxygen is impossible. Even in a state of complete rest, man still consumes about 0.3 litres of oxygen per minute, and this can rise ten–fold when the person is doing heavy physical work.

In medicine oxygen is used for healing purposes. Disturbances of the normal functions of the respiratory system and blood circulation are often accompanied by what is known as oxygen starvation. In such instances the oxygen content of the respiratory air is artificially raised, even to the extent that the sick person can be given pure oxygen to breath.

Oxygen deficiency can arise when persons fly in planes to very high altitudes. The result is violent headaches, sleepiness and sometimes unconsciousness. Pilots setting out on high–altitude flights take special oxygen apparatus with them so that they can be supplied with oxygen at altitudes exceeding 4500 m.

The metalworking industry requires oxygen for welding. It is supplied in seamless steel cylinders. When freshly filled, a pressure of 15 MPa prevails within the cylinder. In order to ensure that the oxygen cylinder is not mistaken with other gas cylinders it is marked with a blue ring.

Danger!

A steel cylinder can explode if it is subjected to hard knocks and jolts, if it is dropped, or if it is exposed to heat. The consequences of such accidents are very grave.

Accident prevention: Oxygen cylinders must be handled with the utmost care during their transportation and use. They must be protected from falls and knocks. Upright cylinders must be held in the standing position by some form of lock or chain to stop them from falling over (fig. 2.4.).

On no account should oxygen cylinders be placed near fires, and they should be covered by canvass to protect them from direct exposure to the sun (fig. 2.5.).

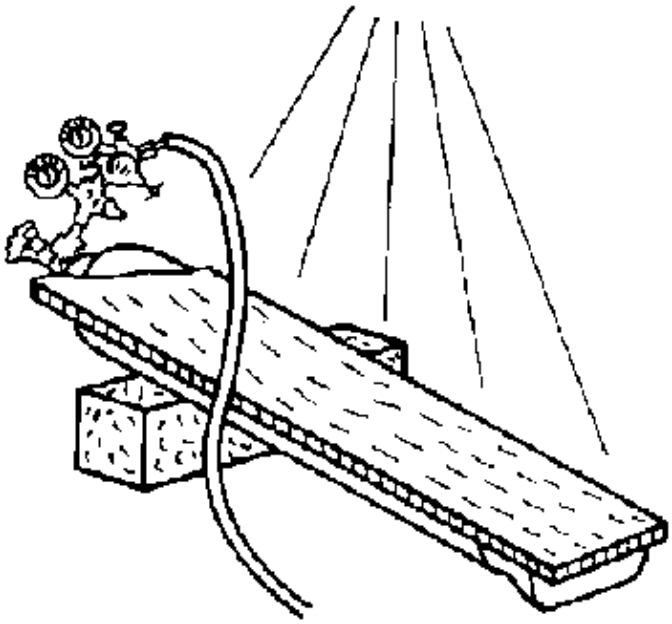

Fig. 2.4. Oxygen steel cylinder with pressure−reducing valve

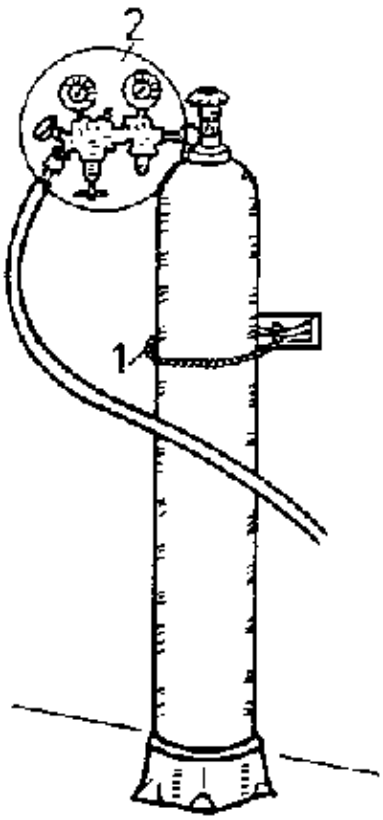

Fig. 2.5. Possibilities to protect an oxygen cylinder

Before a gas cylinder can be used it is necessary to remove the protective cap and locking nut and to screw in a pressure−reducing valve (fig. 2.5.). The handwheel of the cylinder valve is turned to allow the gas to flow into the pressure−reducing valve where the internal cylinder pressure is reduced to the required operating pressure. The pressure is maintained constant independent of the quantity of gas consumed. The first pressure gauge indicates the pressure prevailing inside the cylinder, while the second gauge indicates the operating pressure. The latter can be changed by turning the setting screw.

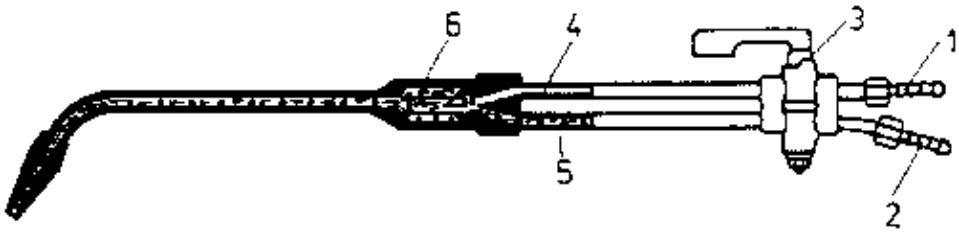

Fig. 2.6. Welding torch

The welding torch (fig. 2.6.) mixes the oxygen with the fuel gas which is usually acetylene (C_2H_2). The fuel gas is sucked in by the oxygen and the mixture is ignited at the nozzle tip of the welding torch. The welding flame has a temperature of 3200°C.

Welding melts the end surfaces of the metal parts so that they flow together forming a fused joint. Hence, welding is a physical process.

Flame cutting parts workpieces by heating the point of separation until it becomes white hot. Oxygen is then blown under high pressure on to this spot, causing the metal to burn so that the oxide is expelled. Flame cutting, therefore, is a chemical process.

Exercises and Questions

2.1. What are the principal components of air?

2.2. How is oxygen produced on an industrial scale?

2.3. Name the properties of oxygen.

2.4. What is oxygen used for?

2.5. How is oxygen sold commercially?

2.6. What points must be observed when handling oxygen cylinders to prevent accidents?

2.7. What is oxidation?

2.8. Which chemical process takes place during flame cutting?

2.9. Why is fusion welding a physical process?

2.2. Hydrogen (Symbol H, Valence I)

2.2.1. Sources

Hydrogen is all around us, but it rarely occurs in its natural state as an element. It is encountered naturally as an element in the atmosphere at an altitude exceeding 100 km.

Hydrogen is present in many chemical, compounds, typical examples being water, all acids, oils, petrol, fats and all plastic materials.

2.2.2. Derivation

In laboratories, where only smaller quantities of hydrogen are required, this element is gained by dissolving zinc in acide.

• Test 2.3.: Producing hydrogen from hydrochloric acid and zinc

A piece of zinc plate is placed in a test–tube and diluted hydrochloric acid is poured over it. It will immediately start to foam, liberating a gas. The test tube is closed by a rubber stopper that has a tube through its centre to conduct off the developing gas. The gas coming out of this tube is hydrogen. It can be ignited. A cold glass funnel is placed over the hydrogen flame (fig. 2.7.). Water droplets will form on the glass wall of the funnel.

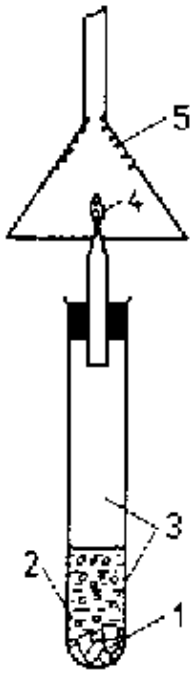

Fig. 2.7. Hydrogen burns under the formation of water.

1 zinc; 2 hydrochloric acid; 3 hydrogen; 4 hydrogen flame; 5 water droplets

Section 2.1.3. already drew attention to the fact that combustion is a process in which a substance combines itself with oxygen, a process that is known as oxidation. Test 2.3. shows that the water droplets formed inside the glass funnel are the combustion product of hydrogen. It follows, therefore, that water is the oxide of hydrogen.

$H_2 + 2\ O_2$? $2\ H_2O$

hydrogen + oxygen ? water

• Test 2.4.: Analysis of water with electric current

Water conducts electrical current if some acid has been added to it. The apparatus shown in fig. 2.8. is well suited for this purpose. Gas bubbles rise from the two electrodes. After a short while the following facts can be established:

1. Colourless gases accumulate over the electrodes in the glass tubes.

2. The quantity of gas accumulating over the negative pole (electrode) is twice as much as that over positive pole (electrode).

3. The gas formed over the negative pole can be ignited. It burns with a pale blue flame. Water droplets are formed on the glass walls of a funnel that is held over the flame (fig. 2.9). The gas is hydrogen.

4. The gas formed over the positive pole is conducted to a glowing wood splint. It instantly starts to burn. This shows that the gas formed over the positive pole is oxygen.

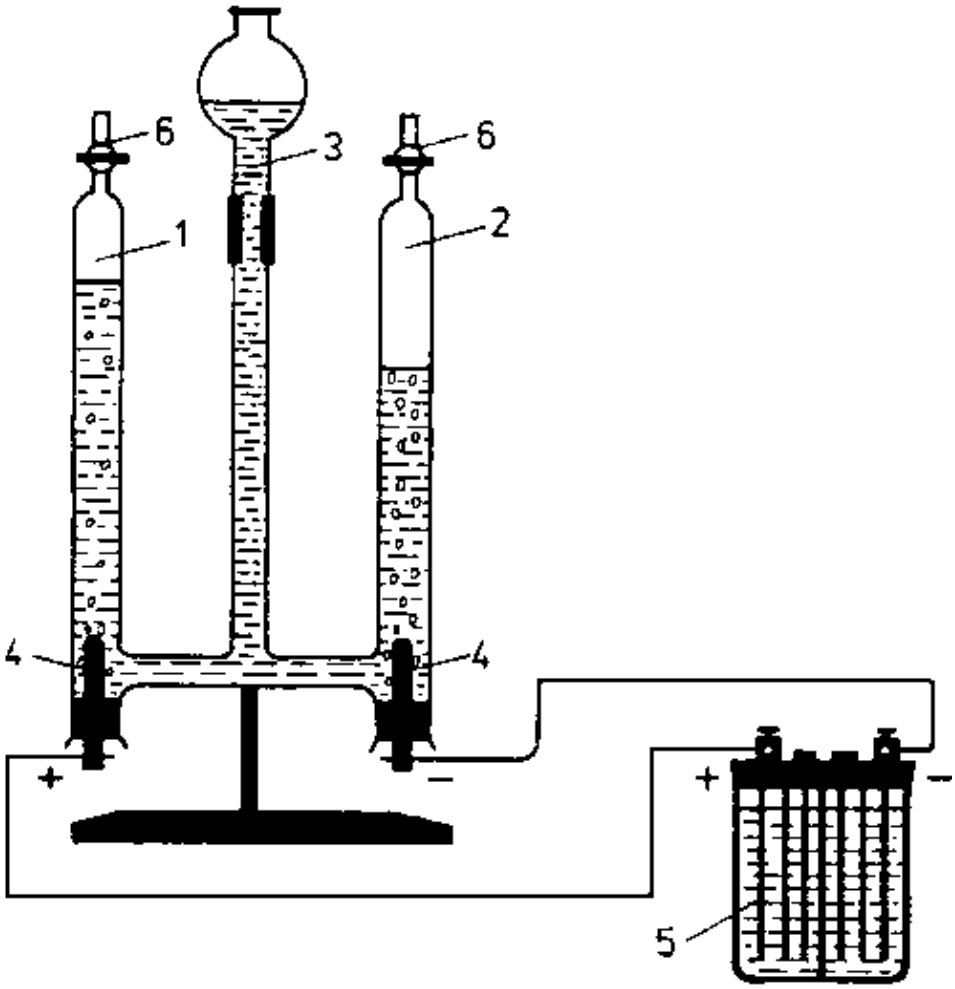

Fig. 2.8. Apparatus for the analysis of water with the help of electrical current.

1 oxygen; 2 hydrogen; 3 water; 4 electrodes; 5 battery; 6 stopcocks

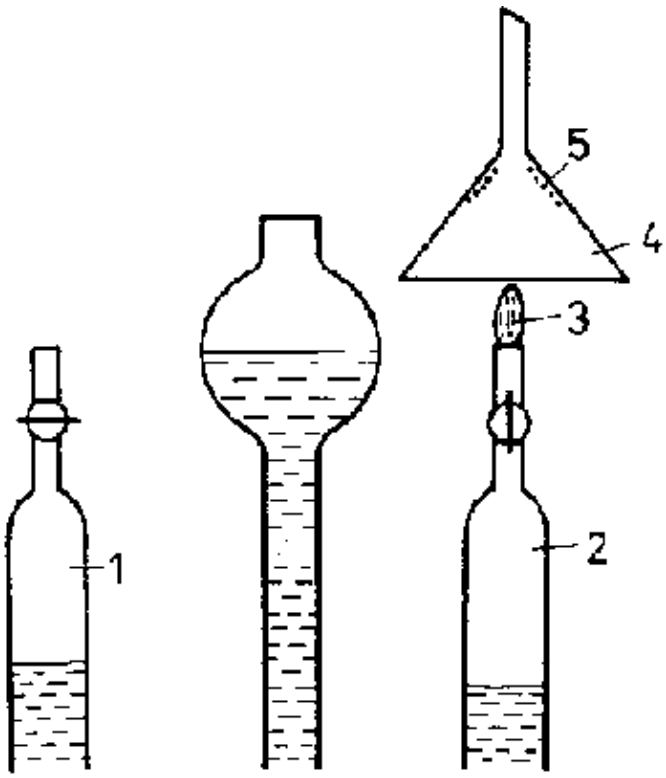

Fig. 2.9. Conformation of hydrogen.

1 oxygen; 2 hydrogen; 3 oxygen flame; 4 funnel; 5 water droplets

The separation (analysis) of chemical compounds with the help of electrical current is known as electrolysis.

The hydrolysis of water is used for the production of hydrogen and oxygen on a technical scale.

$2\ H_2O$? $2\ H_2 + O_2$

• Test 2.5.: Oxygen is extracted from water vapour

The test assembly shown in figure 2.10 is used for this purpose. Wet sand is filled in the bottom of the test–tube. Dry iron powder is poured on top of the wet sand.

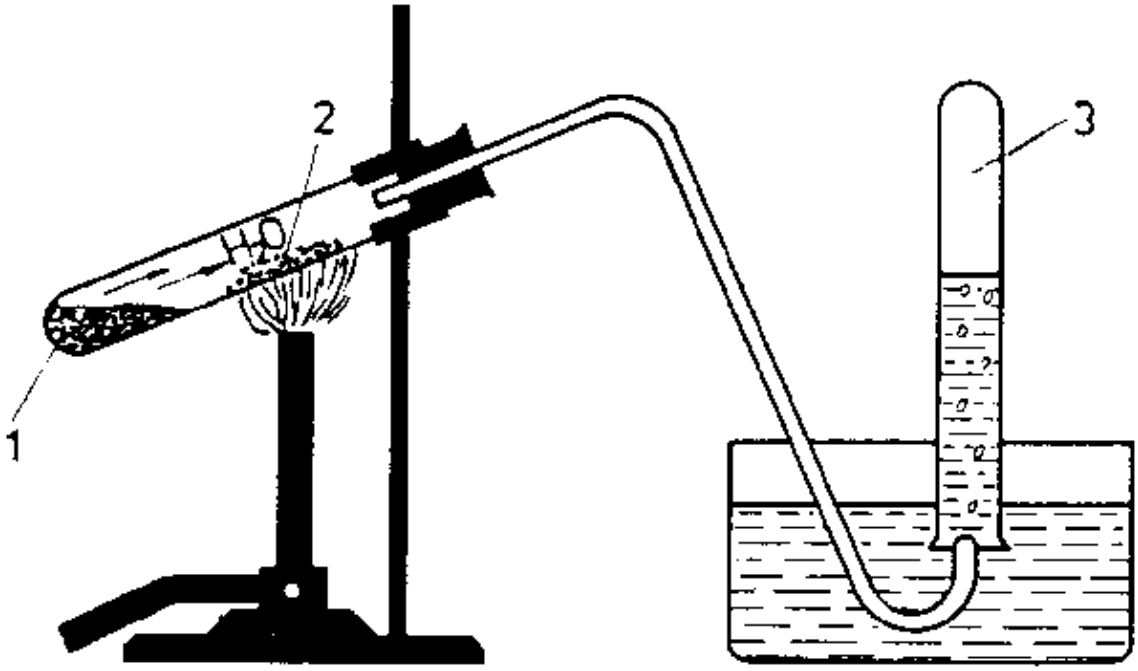

Fig. 2.10. Electrolysis of hydrogen.

1 moist sand; 2 iron powder; 3 hydrogen

First of all the upper part of the test–tube containing the dry iron powder is heated until it starts to glow. The gas expelled from the test–tube is air. The moist sand is then heated. The water vapour formed by this process passes through the heated iron powder. The gas that is now expelled is collected in a test–tube that is turned upside down and filled with water.

The accumulating gas can be tested by holding a flame to the mouth of the test–tube. It will burn with a pale blue flame. The gas is hydrogen.

The hot iron powder extracted the oxygen contained in the water vapour and was thereby converted into iron oxide. The hydrogen was liberated.

$3\ Fe$	+	$4\ H_4O$	?	Fe_3O_4	+	$4\ H_2$
iron	+	water	?	iron (II) (III)–oxide	+	hydrogen

This principle is employed by special installations for largescale production of hydrogen. The iron oxide produced by the reaction is, converted back into iron by appropriate measures after certain intervals so that it can be used several times over for the production of hydrogen.

Reduction

In Test 2.3. water was formed by oxidation (combustion) of hydrogen. In Test 2.5. the oxygen contained in water was extracted by iron, i.e. the process was reversed compared with hydrogen combustion.

Reduction is the process in which oxygen is extracted from a compound.

In order to extract the oxygen contained in a compound it is necessary to select a substance that has a stronger tendency to link with oxygen than the compound containing the oxygen.

Reducing agents are substances that extract oxygen from compounds and link with it.

The reducing process always proceeds together with an oxidizing process.

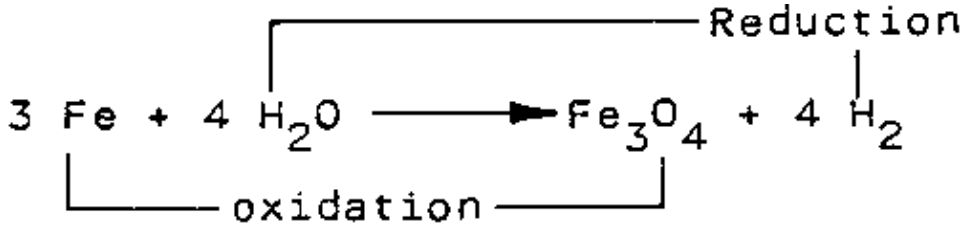

Oxidation and reduction are chemical reactions that are employed to extract metals from ores.

2.2.3. Properties

The Test 2.3. to 2.5. indicate the following properties of hydrogen:

– Hydrogen is colourless and odourless

– Hydrogen burns with a pale blue flame

It has been established that hydrogen burns at a temperature of 2400°C in the presence of pure oxygen

– Water is formed by the combustion of hydrogen. Since every combustion process is an oxidizing process, one can state that water is the oxide of hydrogen

Two further properties are indicated by the Tests 2.6. and 2.7.

• Test 2.6.: Hydrogen is lighter than air

A standing cylindrical vessel is placed on the weighing pan of a balance. It is turned upside down and rested on two wooden block supports. The balance is then precisely tared (fig. 2.11). The air contained in the cylinder is then replaced by hydrogen that is conducted into the cylinder from underneath. The pan holding the hydrogen–filled cylinder will then rise.

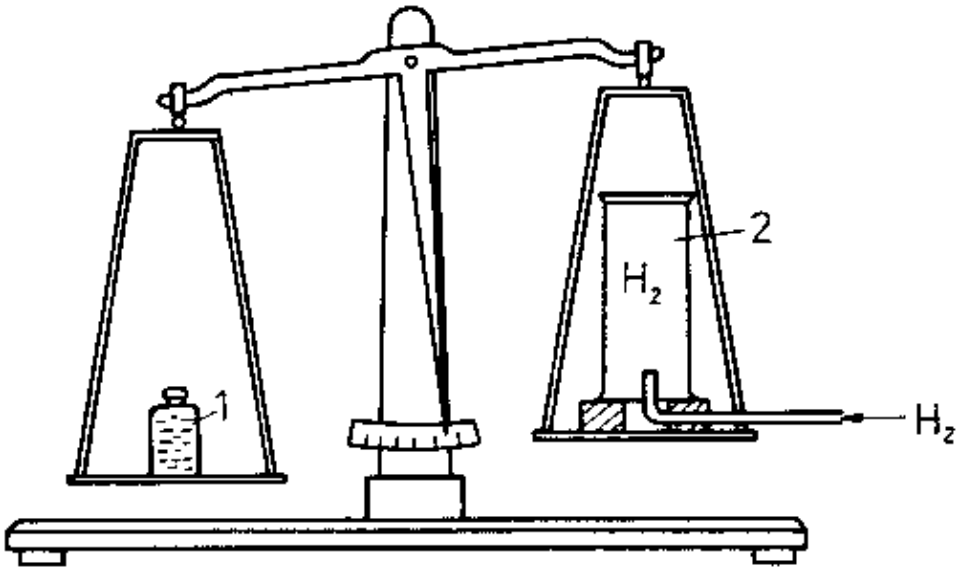

Fig. 2.11. Determining the properties of hydrogen.

1 weight of the cylinder when it is filled with air; 2 standing cylinder

– Hydrogen is the lightest element. 1 litre of hydrogen weights 0.09 g. One litre of air weighs 1.29 g.

• Test 2.7.: Formation of detonating gas

A test–tube is filled to two–thirds of its capacity with water. The thumb is placed over the test tube and the opening is turned upside down and immersed in water. The introduction of hydrogen into the test–tube displaces the water it contains. The test–tube now contains a mixture of air and hydrogen.

The test–tube is once again closed with the thumb and the opening is brought to a flame. As soon as the thumb is removed from the opening the mixture inside the test–tube will detonate with a whistling noise (fig. 2.12).

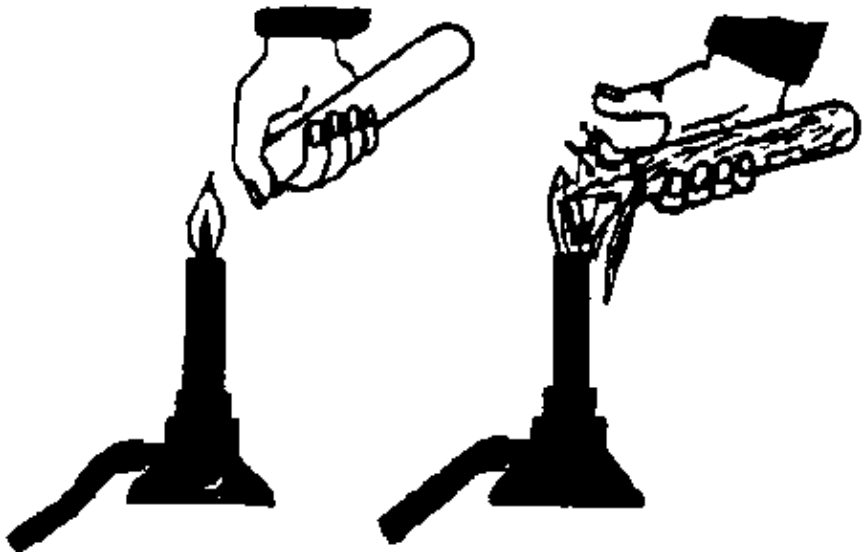

Fig. 2.12. Detonating gas test

– When hydrogen is mixed with air and oxygen an explosive gas mixture is formed. This mixture is known as detonating gas.

The ignition of detonating gas causes the hydrogen to react instantly with the oxygen. Water vapour and heat is suddenly created by this reaction. The heat causes the steam to expand intensely. The resulting high pressure causes an explosion.

2.2.4. Uses

Hydrogen is employed for autogeneous welding.

Special torches (welding torch and cutting torch, fig. 2.6) are employed to prevent an explosion of the detonating gas. These torches unite hydrogen and oxygen only just in front of the point of combustion.

Nowadays, acetylene (C_2H_2) is used in place of hydrogen for autogenous welding. The flame of acetylene is hotter than that of hydrogen (3200°C). Oxygen–hydrogen welding is now only employed to weld thin sheets and aluminium. The lower temperature of the hydrogen flame prevents overheating at the point of welding.

Hydrogen is supplied in steel cylinders under a pressure of 15 MPa, similar to oxygen. To prevent mistakes, hydrogen cylinders are marked with red paint, and the connection flanges have a left–hand thread. Hydrogen cylinders should be handled with the same care as oxygen cylinders (see Section 2.1.4.).

Hydrogen is an important raw material in the chemical industry. It is required for the production of ammonia (which, in turn, is a vital raw material for the production of fertilizers), and to convert fluid oils into solid fats.

Exercises and Questions

2.10. Of which elements is water composed of?

2.11. How can hydrogen be produced in small quantities?

2.12. How can one prove that water is produced as a result of the combustion of hydrogen?

2.13. What is electrolysis?

2.14. What is reduction?

2.15. What is a reducing agent?

2.16. How is a reducing agent changed by reduction?

2.17. State the properties of hydrogen.

2.18. What is hydrogen used for?

2.19. What is detonation gas?

2.20. What are the differences between oxygen cylinders and hydrogen cylinders?

2.3. Nitrogen (Symbol N, Valence I, II, III, IV, V)

2.3.1. Sources

The element is the principal component of air. Nitrogen is chemically bonded in saltpetre, ammonia and in many other natural compounds. It is a component of vital compounds contained in plant and animal cells.

• Test 2.8.: Production of nitrogen from the air

The apparaturs required for this purpose is shown in figure 2.13. A copper wire mesh is heated until it becomes red hot. Water is then allowed to flow slowly into the left–hand cylinder. When the water has reached the precise filling level of 500 cm the stopcock of the drip funnel is closed. The right–hand cylinder only contains four–fifths of the displaced air volume of the left–hand cylinder. One fifth of the volume is missing. The copper has become black. It is covered with a black copper (II)–oxide coating. The oxygen contained in the air has bonded with the copper during this oxidizing process.

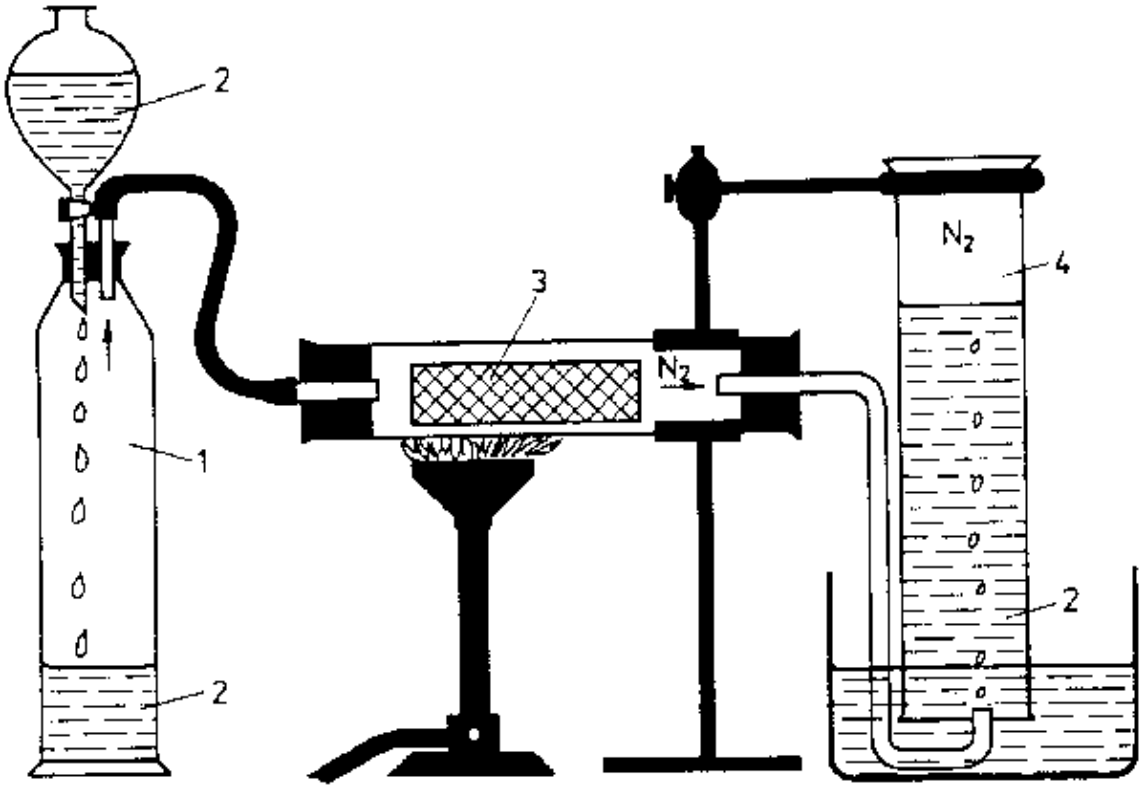

Fig. 2.13. Producing nitrogen from the air.

1 air; 2 water; copper wire mesh; 4 nitrogen

$2\ Cu + O_2$? $2\ CuO$

The right–hand cylinder is closed under water by covering it with a glass plate and is this taken out of the water. It is placed in an upright position and a burning candle is inserted in the cylinder. The flame of the candle will go out, i.e. it is extinguished.

The air inside the cylinder consists to one fifth of oxygen and to four–fifths of nitrogen.

2.3.2. Derivation

Nitrogen can be produced from the air. Dust as with oxygen production, the differing boiling temperatures of liquid nitrogen (–196°C) and liquid oxygen (–183°C) are exploited for this purpose.

The air is cooled to a temperature of about –200°C and thus liquified. The nitrogen is the first component to evaporate when the liquid air is slowly heated.

2.3.3. Properties

Test 2.8. indicates the following properties of nitrogen:

– Nitrogen is a colourless, tasteless and odourless gas
– Nitrogen is incombustible

Other properties:

– It does not bond with any other element at room temperature
– At higher temperatures it bonds with some metals, e.g. with iron
– At temperatures exceeding 200°C at a pressure of 20 MPa, nitrogen bonds with hydrogen to form ammonia

$N_2 + 3\ H_2$–200°C, 200 at ? $2\ NH_3$

Nitrogen + hydrogen ? ammonia

2.3.4. Uses

Nitrogen produced from the air is used primarily for largescale ammonia synthesis.

Ammonia is a colourless gas with a pungent small. It is readily soluble in water. 1 litre of water at a temperature of 20°C will dissolve about 700 litres of ammonia. Ammonia gas evaporates continuously from this ammonia solution.

Ammonia is the raw material for the production of nitric acid, soda and fertilizers.

Ammonia gas is employed in the metal industry, primarily to harden certain grades of steel.

Exercises and Questions

2.21. How can nitrogen be extracted from the air?

2.22. How large is the share of nitrogen in the air?

2.23. List the properties of nitrogen.

2.24. What is ammonia?

2.25. What is an ammonia solution?

2.26. For what purpose is ammonia gas used in the metal industry?

2.4. Carbon (Symbol C, Valence II, IV)

2.4.1. Sources

Elementary carbon exists in two forms, as diamonds and as graphite.

Carbon is present in a chemically bonded state in the carbonates (e.g. limestone, marble, siderite, dolomite), as well as in all compounds of living nature, including its decomposition products such as hard coal, petroleum and natural gas.

Wood and hard coal, as well as other compounds of living nature, can be heated under the exclusion of air to produce porous kinds of coal, e.g. charcoal (from wood) and coke (from coal). These materials are primarily composed of elementary carbon.

2.4.1.1. Diamonds

The diamonds is the hardest natural substance. It is mined primarily in the Congo area and in South and South–west Africa. In its purest form the diamond is a colourless, water–clear crystal. Cut diamonds have pronounced light refracting properties and a high lustre. That is why diamonds are cut into jewels. But only a very small share of the diamonds that are mined are so pure that they can be used for jewellery. On account of its extreme hardness, the diamond is extensively used in industry to cut glass and for special tools that are used to cut very hard rocks.

If a diamond is heated to a temperature of 1500°C under the exclusion of air it will transformed into graphite. In the presence of air the diamond burns brilliantly, forming carbon dioxide.

2.4.1.2. Graphite

Graphite is found in vast quantities in nature. The main deposits are in Scri Lanka, Madagaskar, Mexico and east Siberia. Graphite is also produced from carbon compounds in an electric furnace.

Graphite is a grey flaky substance with a slight gloss that feels greasy and rubs off easily. Contrary to the diamond, graphite is very soft and it conducts electrical current. Graphite is mixed with lead to produced leads for pencils. On account of its greasy properties, graphite is extensively used as a heat–resistant lubricant. Its electrical conductivity and high–melting point make it ideal for the production of electrodes for electrolysis equipment and as slip contacts for electric motors.

Similar to diamonds, graphite burns into carbon dioxide because both are made of the same element, namely carbon.

Soot is pure carbon and is a form of graphite. It is liberated by the flames of fuels rich in carbons (e.g. petroleum, petrol, oil, candles) if there is not sufficient oxygen for completes combustion or if the flame is cooled by holding a cold object in the flame.

• Test 2.9.: Precipitating soot from the flame of a candle

A cold porcelain plate is held in the flame of a candle. Soot is deposited on the porcelain.

• Test 2.10.: Precipitating soot from a petroleum flame

A small wool rag is steeped in petroleum and then ignited. It burns, thus developing a great deal of black smoke (soot). A cold porcelain plate held over the flame is quickly covered with a layer of deep black soot.

2.4.1.3. Charcoal and Coke

• Test 2.11.: Production of charcoal

A quarter of a test–tube is filled with dry pieces of wood. The test–tube is then firmly closed with a stopper containing a glass tube. The pieces of wood are then slowly heated (fig. 2.14.). Gas is liberated that can be ignited. Two liquids collect at the top of the test–tube. The brown oily liquid is wood tar, while the watery fluid is pyroligneous acid.

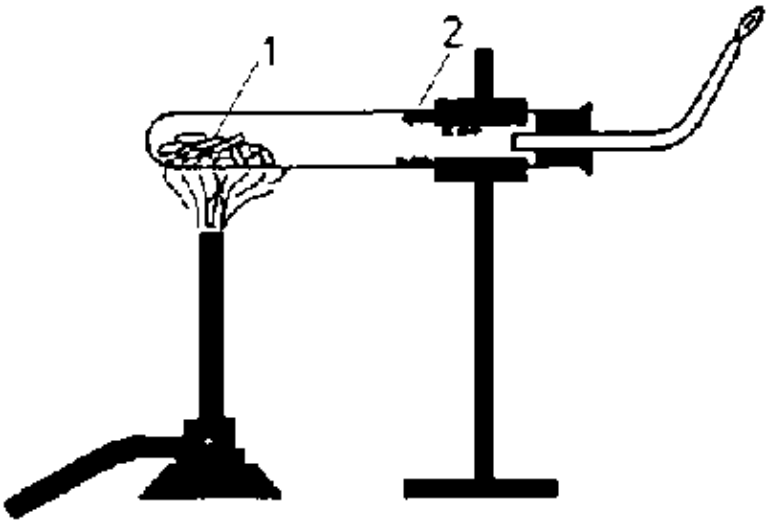

Fig. 2.14. Producing charcoal.

1 pieces of wood, 2 wood tar

When wood is heated under the exclusion of air it will not burn. The wood is decomposed, liberating gaseous and liquid components. The residue is very rich in carbon. This residue is known as charcoal.

If test 2.11 is repeated with hard coal instead of wood, the resulting process proceeds in a similar manner. The residue is likewise very rich in carbon but is stronger than charcoal. This residue is coke. Coke is used as a heating and reducing agent for the production of metal from ores.

• Test 2.12.: Charcoal removes dyestuffs out of solutions

The glass tube if filled with fine–grain charcoal (fig. 2.15.). If a coloured solution, e.g. diluted red or blue ink, is allowed to trickle through the charcoal filling the liquid coming out at the other end is colourless. The dyestuff contained in the solution has precipitated at the surface of the charcoal, i.e. it has been adsorbed by the charcoal.

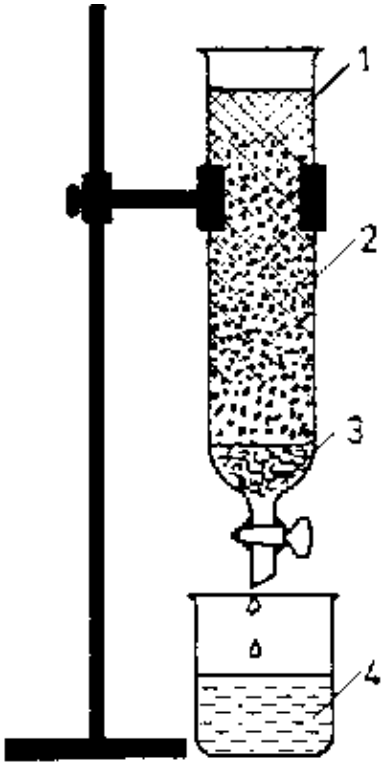

Fig. 2.15. Decolourizing a colour solution with charcoal.

1 colour solution;
2 charcoal;
3 glass wool;
4 decoloured liquid

Gases and vapours are also adsorbed by charcoal. A test assembly for this purpose is shown in figure 2.16. Illuminating gas mixed with benzene burns under the development of a considerable quantity of soot. If this gas mixture is passed through a layer of charcoal the benzene vapours will be adsorbed so that the flame behind the charcoal filter will burn without the formation of soot.

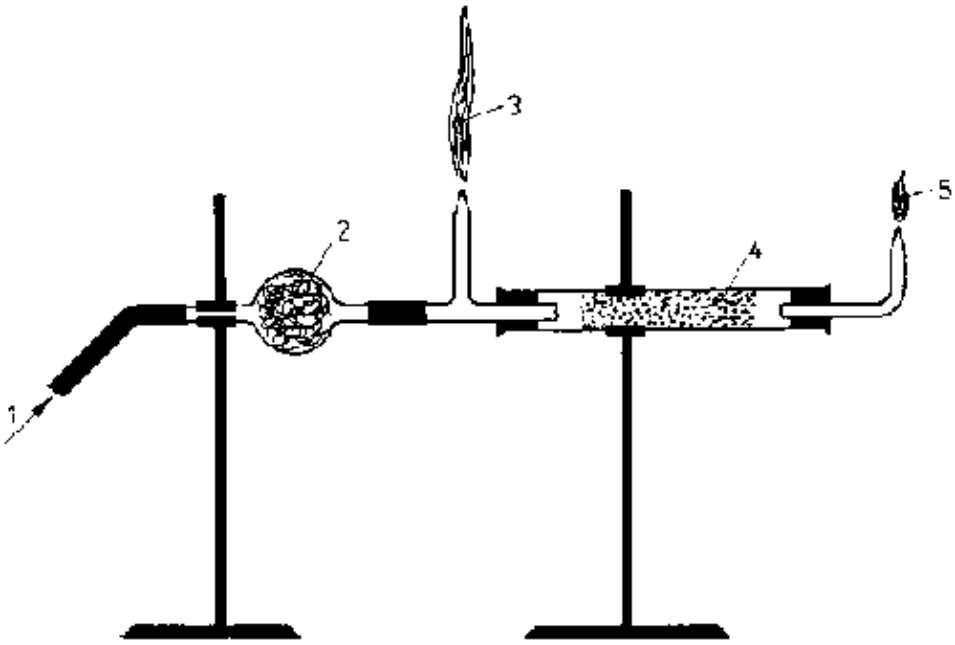

Fig. 2.16. Benzene vapours are retained by the charcoal pieces.

1 illuminating gas; 2 cotton wool soaked in benzene; 3 sooting benzene flame; 4 charcoal; 5 flame of pure illuminating gas

Porous charcoal adsorbs gases, dyestuffs and odourous substances.

The ability of charcoal to adsorb gases is exploited by breathing masks. The breathing filter contains charcoal (fig. 2.17.).

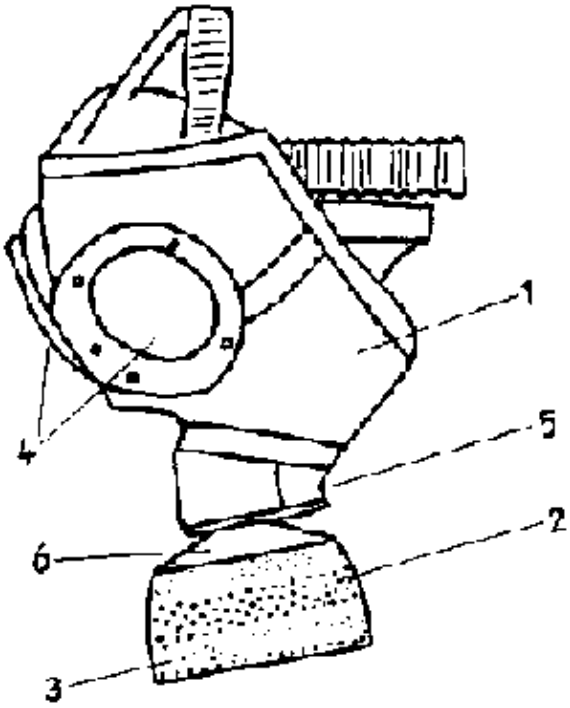

Fig. 2.17. Breathing mask; cross–section view of protective filter.

1 mask;
2 charcoal;
3 particle filter;
4 eyeshield;
5 exhaling valve

2.4.2. Carbon Oxide

2.4.2.1. Carbon Dioxide

• Test 2.12.: Production of carbon dioxide

A glass tube filled with charcoal is mounted horizontally and is then heated with a Bunsen burner (fig. 2.18.). Air is passed over the glowing charcoal. One will see that the charcoal flares up. The combustion gases are conducted into a wash bottle containing lime water. One will see that this lime water becomes milky turbid. This turbidity of the lime water is proof of the presence of carbon dioxide.

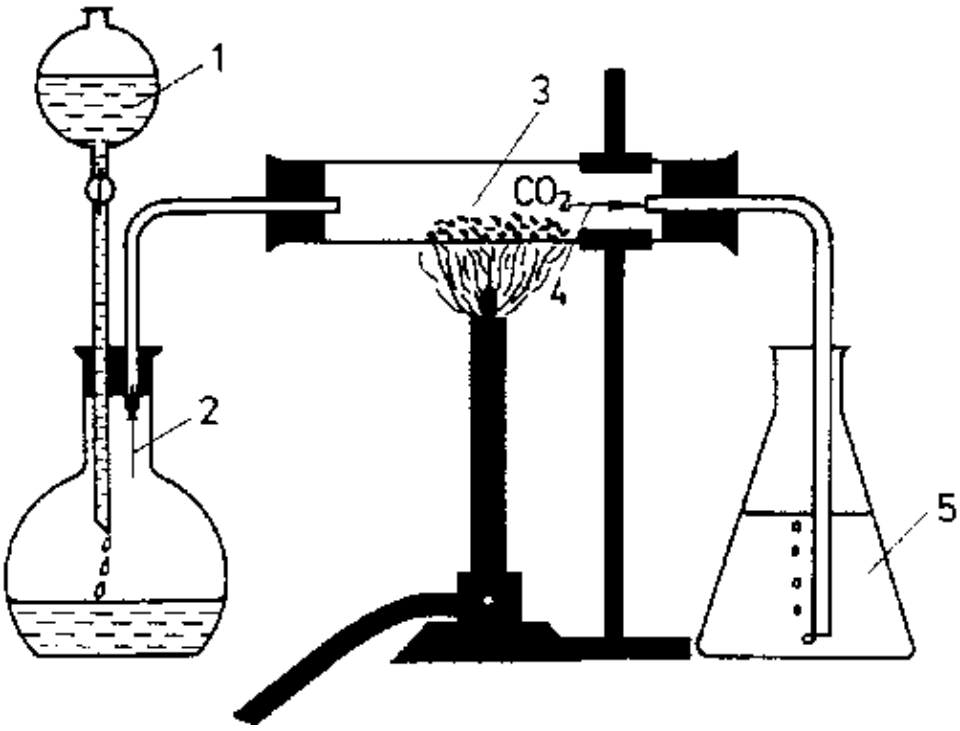

Fig. 2.18. Production of carbon dioxide.

1 water; 2 air; 3 glowing charcoal; 4 carbon dioxide; 5 lime water

• Test 2.13.: Carbon dioxide is incombustible and heavier than air

Carbon dioxide is conducted from the base into a standing cylinder in which candles of differing length are burning (fig. 2.19.).

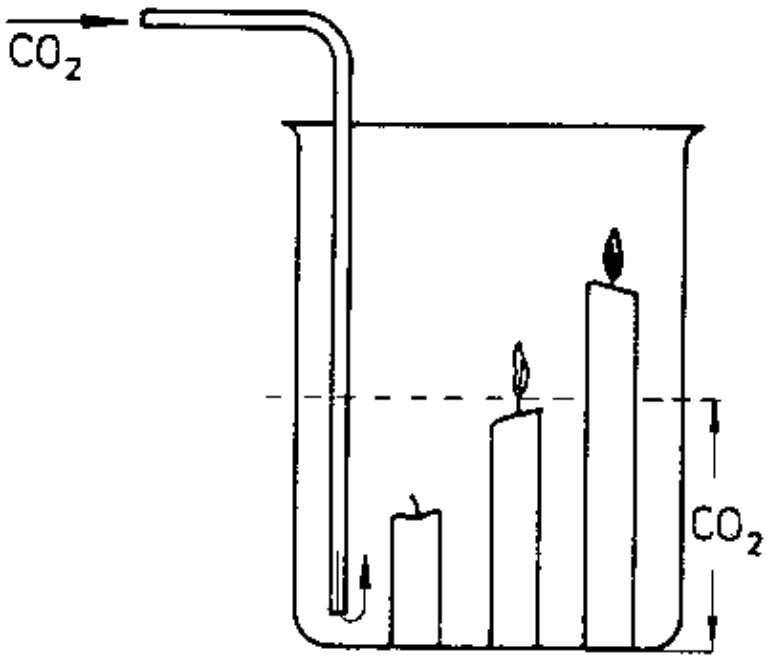

Fig. 2.19. Proof that carbon dioxide is heavier than air

One will see that the candles will be extinguished one after the other, proceeding from the shortest to the longest, as the cylinder becomes progressively filled with carbon dioxide.

The following points can be established from the Tests 2.12. and 2.13.:

– In the presence of an adequate supply of oxygen carbon burns and is transformed into carbon dioxide

$C + O_2$? CO_2

– Carbon dioxide makes lime water turbid

– Carbon dioxide is heavier than air

– Carbon dioxide is incombustible

2.4.2.2. Carbon Monoxide

Next to carbon dioxide, carbon also forms another oxide known as carbon monoxide. Its composition differs from that of carbon dioxide in that the carbon atom bonds only one oxygen atom and not two as is the case with carbon dioxide.

CO_2	CO
carbon dioxide	carbon monoxide

Carbon monoxide is formed when an oxygen atom is taken away from carbon dioxide, i.e. when carbon dioxide is reduced to carbon monoxide.

• Test 2.14.: Production of carbon monoxide

Carbon monoxide can be produced with the apparatus shown in figure 2.20. If hydrochloric acid is allowed to drip from a drip funnel (1) on to pieces of marble (2) one will see that the acid will foam. This is due to the development of gas. This gas is carbon dioxide. The carbon dioxide is passed over glowing charcoal (3) to reduce it to carbon monoxide.

$CO_2 + C$? $2\ CO$

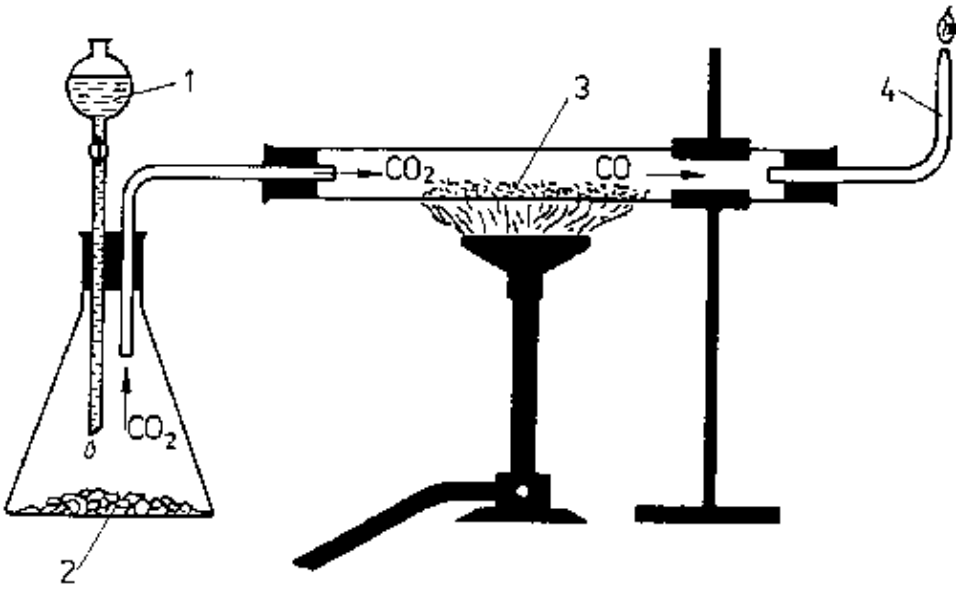

Fig. 2.20. Production of carbon monoxide.

1 hydrochloric acid; marble; 3 glowing charcoal; 4 glass tube

The carbon monoxide coming out of the tube (4) can be ignited. It burns, once again forming carbon dioxide.

Carbon monoxide is a colourless, highly toxic gas that burns with a blue flame to form carbon dioxide. Such bluish flames can often be seen in a coal or coke fire. The chemical processes taking place in a coal stove are shown in figure 2.21.

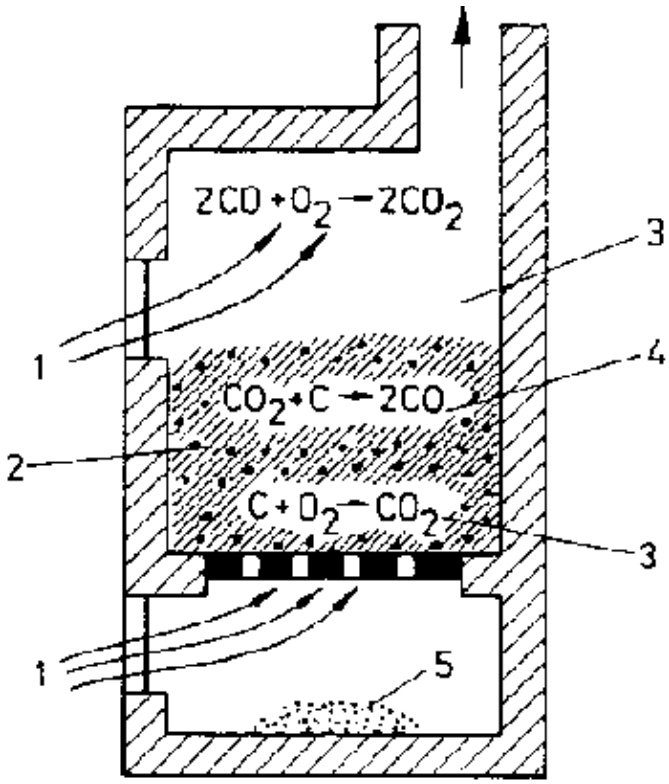

Fig. 2.21. Process of oxidation during reduction in a coal stove.

1 air;
2 coke;
3 excessive oxygen;
4 oxygen deficiency;
5 ashes

The air coming in from underneath the grid burns the coal to form carbon dioxide. The coal on top reduces part of this carbon dioxide into carbon monoxide. This, in turn, is combusted at the top of the coal, as is indicated by the blue flames, where carbon dioxide is formed once again.

Air deficiency within the stove will mean that the carbon monoxide cannot burn completely. If this gas is allowed to leak into inhabited rooms poisoning with fatal effects will be the consequence. Poisoning is indicated by headaches, dizziness and eventually by unconsiousness. Persons suffering from carbon monoxide poisoning should be immediately brought out into the fresh air as the first curative measure.

Carbon monoxide is contained in the exhaust gases of petrol engines. That is why the engine of a car should never be run in a closed garage.

Carbon monoxide is a highly effective reducing agent for the production of iron in the blast furnace.

Exercises and Questions

2.27. In which forms does elementary carbon exist?

2.28. For what purpose is the diamond used in industry?

2.29. What are the properties of graphite?

2.30. What are the uses of graphite in industry?

2.31. What is soot?

2.32. What are the conditions under which charcoal and coke are produced?

2.33. What is the property of charcoal that makes it suitable for use as a filter in breathing masks?

2.34. How do carbon dioxide and carbon monoxide differ in their chemical composition?

2.35. What are the properties of carbon dioxide?

2.36. Under what condition does carbon transform into carbon monoxide when it is burnt?

2.37. Describe the oxidizing and reducing processes that take place in a coal stove.

2.38. What are the symptoms of carbon monoxide poisoning?

2.5. Acids

2.5.1. General Remarks

Acids are chemical compounds that have an acidic taste. Vinegar and lemon juice, for instance, are acids.

Acids, at least in a concentrated condition, decompose or dissolve metals, the skin and fabrics. They have an etching action. Most acids are liquid, but there are some solid acids for example citric acid which is a white solid substance, usually in the form of a powder. Some dyestuffs are characteristically discoloured by acids. These dyes are used to indicate the presence of acids. Litmus is the customary indicator dye used for this purpose.

Acids cause litmus to take on a red colour.

• Test 2.15.: Acid indication

Drops of vinegar or citric acid (lemon juice) changes the colour of blue litmus paper into red.

The acids used in the metalworking industry are usually much stronger in their etching action than vinegar and citric acid. Typical examples are sulphuric acid, nitric acid and hydrochloric acid.

2.5.2. Sulphuric Acid

2.5.2.1. Properties

Pure, concentrated sulphuric acid is as clear as water and viscous. It has pronounced water–attracting properties, i.e. it is hygroscopic. If a bottle of sulphuric acid is left open the contents will gradually dilute itself because the sulphuric acid extracts the moisture contained in the atmosphere.

Sulphuric acid chars wood, paper, sugar and other organic substances by its dehydrating and oxidizing action. Concentrated sulphuric acid usually has a brownish colour due to the charred dust that has fallen into the acid.

• Test 2.16.: Sulphuric acid chars organic compounds

Weak sulphuric acid is poured over sugar, wood or fabric material in a glass dish. After a brief period one can see that the substances become black.

Great caution is necessary when diluting concentrated sulphuric acid with water. The acid should always be added to the water in very small quantities. Mixing causes the evolution of much heat (fig. 2.22). If the water is poured into the acid the water will become so hot that it will evaporate causing explosive spattering, even breaking glass vessels.

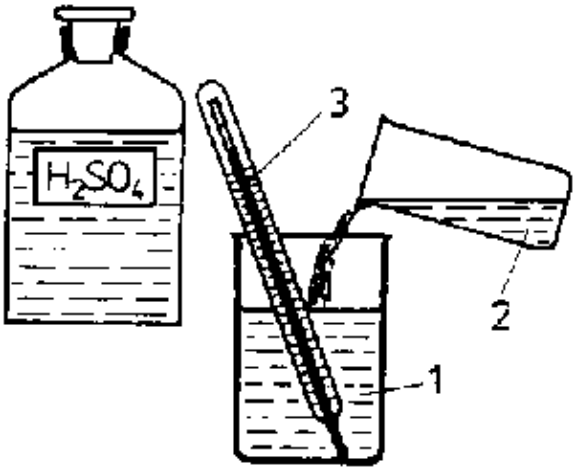

Fig. 2.22. Diluting sulphuric acid.

1 water;
2 acid;
3 thermometer

Caution! Always the water first and then the acid. Never the other way!

• Test 2.17.: The effect of concentrated sulphuric acid on steel and copper

A piece of steel and a piece of copper are each placed in separate test–tubes. Some concentrated sulphuric acid is poured over the metal pieces. Both test–tubes are cautiously heated over a flame.

A chemical reaction is soon noticeable in the test–tube containing the copper. The acid becomes blue. A stinging gas (sulphur dioxide SO_2) is liberated and the copper is dissolved. The piece of steel, on the other

hand, is unchanged.

Hot concentrated sulphuric acid dissolves copper. Steel (iron) is resistant to concentrated sulphuric acid.

The action of sulphuric acid on steel leads to the formation of a very dense and chemically highly resistant oxide skin on the surface of the steel that protects it from further etching action of the sulphuric acid. That is why concentrated sulphuric acid can be transported in steel drums.

• Test 2.18.: The action of diluted sulphuric acid on steel and copper

A piece of copper and a piece of steel are each placed in separate test–tubes and diluted sulphuric acid is poured over them. Bubbles start to rise from the piece of steel which is dissolved. The rising gas is hydrogen.

The piece of copper, on the other hand, is not dissolved by diluted sulphuric acid.

Diluted sulphuric acid dissolves all metals except copper, silver, mercury and gold.

Sulphuric acid diluted in a ratio of 1 to 10 with water is used as a matt pickling solution for copper, brass, German or nickel silver and steel. After treatment the action of the acid has to be neutralized by rinsing the workpiece with milk of lime and water.

2.5.2.2. Derivation

Sulphuric acid is a compound of sulphur trioxide and water.

SO_3	+	H_2O	?	H_2SO_4
sulphur trioxide	+	water	?	sulphuric acid

Only sulphur dioxide (SO_2) if formed when sulphur is burnt. Consequently, sulphur dioxide has to be oxidized still further to obtain sulphur trioxide. For this purpose sulphur dioxide and air are conducted over a fine mesh of platinum at a temperature of 450°C. The platinum acts as a contact between the sulphur dioxide and the oxygen contained in the atmosphere. The platinum, itself, remains unchanged.

Substances that influence a chemical reaction by their presence without changing themselves are known as catalysts. The resulting sulphur trioxide is conducted into water.

2.5.3. Nitric Acid

2.5.3.1. Properties

Pure nitric acid is a colourless liquid with a stinging smell. Concentrated nitric acid is decomposed when it is exposed to daylight. Reddish–brown vapours are formed, and some of these vapours are dissolved in the acid, giving it its yellowish–brown colour.

Nitric acid is one of the strongest acids. It dissolves almost all metals, also silver.

It decomposes at higher temperatures, splitting off oxygen:

$2\ HNO_3$	?	$2\ NO_2$	+	H_2O	+	O
nitric acid	?	nitrogen dioxide	+	water	+	oxygen

Since nitric acid splits off oxygen it is a powerful oxidizing agent.

• Test 2.19.: Using nitric acid as an oxidizing agent

A small quantity of concentrated nitric acid is poured into a test tube. A small piece of glowing charcoal is dropped into the acid. Lively combustion (oxidation) of the charcoal is noticeable.

The powerful oxidizing action of nitric acid makes it dangerously flammable.

Easily flammable substances such as straw or wood−wool can start to burn if they come into contact with nitric acid. Consequently, bottles containing nitric acid should be protected only by glass−wool or other non−flammable substances.

Aluminium, nickel, chromium, iron and a few grades of high−quality steel are dissolved by diluted nitric acid, but are not attacked by concentrated nitric acid. This is due to the fact that the action of concentrated nitric acid causes the formation of a dense oxide coating on the metal surface. This skin protects the metal underneath from further attack.

Nitric acid is used as a burnishing pickling agent for metals. Brief immersion of heated copper or brass in nitric acid will give the metals a bright glossy surface. The acid is washed off the work−piece after pickling and the workpiece is quickly dried.

Nitric acid is used to etch metals. For instance, copper plates can be coated with wax. A drawing is then scratched into the wax after which the wax−coated copper plate is immersed in nitric acid. The bare copper is dissolved. After the wax has been removed the drawn picture will appear as an etching on the copper plate.

Etching and pickling of metals with nitric acid liberates poisonous reddish−brown gases (nitrogen dioxide). Processes involving the use of nitric acid require appropriate ventilation to draw off the dangerous gas, or they must be conducted in the open air.

Nitric acid produces intense yellow spots on the skin that cannot be washed off with soap. These spots remain until new skin has formed, pushing off the yellow skin.

2.5.3.2. Derivation

Nitric acid is produced on an industrial scale from ammonia (see Section 2.3.4.). Ammonia reacts with the oxygen contained in the atmosphere in the presence of a platinum catalyst at a temperature of 700°C. forming nitrogen dioxide and water which combine into nitric acid.

$3\ NO_2$	+	H_2O	?	$2\ HNO_3$	+	NO
nitrogen dioxide	+	water	?	nitric acid	+	nitrogen monoxide

2.5.4. Hydrochloric Acid

2.5.4.1. Properties

The two gases chlorine and hydrogen combine to form hydrogen chloride. This gas is readily soluble in water. This watery solution of hydrogen chloride is known as hydrochloric acid.

One litre of concentrated hydrochloric acid contains 720 litres of dissolved hydrogen chloride. Concentrated hydrochloric acid develops vapours when exposed to the atmosphere. This is because the evaporating hydrogen chloride attracts humidity and forms small acid droplets.

Hydrochloric acid has the same stinging smell as hydrogen chloride gas. Chemically pure hydrochloric acid is colourless. Most of the crude hydrochloric acid used in industry has a yellow colour because it contains small quantities of dissolved iron.

Hydrochloric acid is a strong acid that dissolves many metals under the development of hydrogen. Copper, silver, gold and platinum are not attacked by hydrochloric acid.

Hydrochloric acid has many uses in industry, for instance to clean metal surfaces. Rust and scale can be removed from steel with hydrochloric acid.

2.5.4.2. Derivation

Common salt, this being a compound of the metal sodium and the gas chlorine, is dissolved in water. Electrical current is used to separate chlorine gas and hydrogen from this solution. The hydrogen is burnt in a chlorine gas atmosphere. The resulting combustion product is hydrogen chloride.

• Test 2.20.: Production of hydrogen chloride

A spoon full of potassium permanganate is dispensed in a standing cylinder. Some hydrochloric acid is poured over this purple salt. The cylinder is filled with a yellowish–green gas that is heavier than air. This gas is chlorine.

A burning wood splint is introduced into the chlorine gas. The flame is extinguished.

However, if a hydrogen flame is introduced into the chlorine gas (fig. 2.23.) it will continue to burn. The hydrogen bonds with the chlorine. The resulting hydrogen chloride can be detected by its stinging smell.

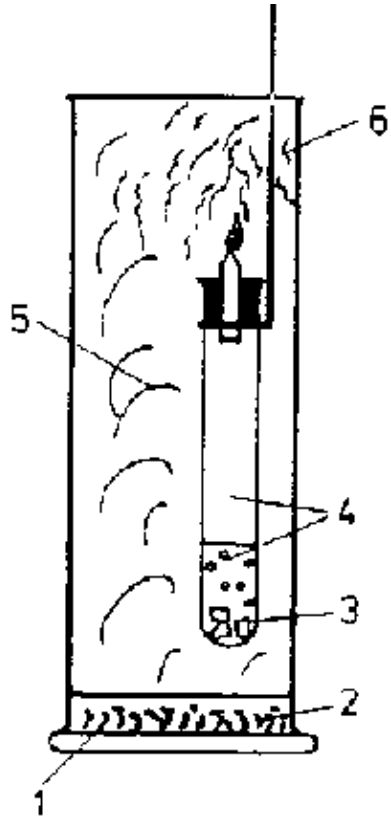

Fig. 2.23. Production of hydrogen chloride

1 potassium chlorate;
2 hydrochloric acid;
3 zinc;
4 hydrogen;
5 chlorine gas;
6 hydrogen chloride

Exercises and Questions

2.39. Which properties are common to all acids?

2.40. How can one confirm the presence of acids?

2.41. Which acids are primarily employed in the metalworking industry?

2.42. What are the properties of sulphuric acid?

2.43. What has to be duely observed in connection with diluted sulphuric acid?

2.44. Why can only concentrated sulphuric acid be stored in steel drums?

2.45. Which metals are not attacked by diluted sulphuric acid?

2.46. Which acid dissolves silver?

2.47. Why is it impermissible to use straw to protect bottles holding concentrated nitric acid?

2.48. What are the component elements of nitric acid?

2.49. Why is aluminium not attacked by concentrated nitric acid?

2.50. For what purpose is nitric acid employed in the metalworking industry?

2.51. Why must all work in connection with nitric acid be completed only under a ventilated exhaust or out in the open air?

2.52. What is hydrochloric acid?

2.53. How can chemical rust be removed from steel?

2.54. Which metals are not attacked by hydrochloric acid?

2.6. Lyes

2.6.1. General Remarks

Potash lye, soda lye and lime water are lyes that are widely employed in industry. These lyes are watery solutions of:

- Potassium hydroxide KOH
- Sodium hydroxide NaOH
- Calcium hydroxide $Ca(OH)_2$

The OH groups are characteristic of the formulas of these compounds. The OH group is a firmly bonded atom group within a molecule. It never arises on its own and can only transfer from one compound to another. The OH group has the valence I. Its notation is isolated as $(OH)^I$. The brackets are omitted if the group is present only once within a molecule.

Next to the OH groups, the afore–listed chemical compounds also contain the metals potassium (K), sodium (Na) and calcium (Ca). The pure forms of these metals are not employed in industry. They have the pronounced tendency to bond with oxygen which is why they are unstable in the atmosphere. They are rapidly oxidized by the oxygen contained in the atmosphere.

The following section describes how soda lye is derived from sodium. Potash lye and lime water are derived by the same method.

Sodium is stored in petroleum so that it cannot be oxidized by the oxygen contained in the atmosphere (fig. 2.24.). Petroleum contains no oxygen. Sodium has a greyish–white appearance.

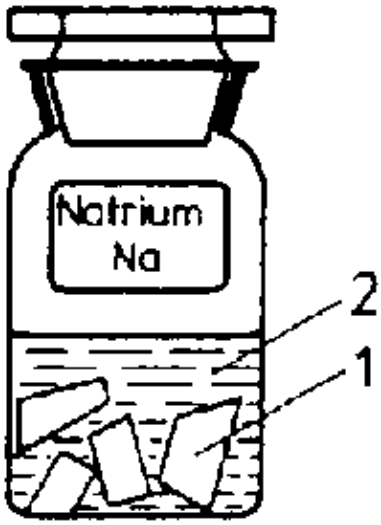

Fig. 2.24. Correct storage of petroleum.

1 sodium; 2 petroleum

Warning! Caution is required when working with sodium. One must not touch it with the fingers, and, what is most important, it must not come into contact with water. This is because sodium reacts very violently with water, extracting the oxygen it contains.

• Test 2.21.: Production of soda lye

A piece of sodium is pierced on to a wire and lifted out of the bottle. The petroleum adhering to the piece of sodium is removed with blotting paper. The sodium is then cut with a knife. The cut surface reveals that sodium is a silver–glossy metal. The cut surface is soon covered by a white coating of sodium oxide (Na_2O) as it is exposed to the atmosphere.

A piece of sodium is heated in a combustion spoon. It ignites and burns with a bright yellow flame, transforming it into sodium oxide.

After the combustion spoon has been allowed to cool off, the sodium oxide is placed in a small beaker filled with water. The sodium oxide is dissolved.

If one dips the fingers in the liquid and then rubs them one will notice that the liquid feels like soap water. A strip of red litmus paper becomes blue when it is dipped into the liquid.

The resulting liquid is known as soda lye. It is formed according to the following equation:

$$Na_2O + H_2O \;?\; 2\,NaOH$$

sodium oxide + water ? soda lye

• Test 2.22.: Production of sodium hydroxide

The sodium lye produced in Test 2.21. is poured into a porcelain dish and boiled down, leaving a solid white residue. This residue is sodium hydroxide. It has the formula NaOH because soda lye is the watery solution of sodium hydroxide.

Sodium hydroxide has an etching effect on the skin. Potassium hydroxide and calcium hydroxide also have the same etching effect. Since potassium hydroxide and calcium hydroxide can be produced by the same method as sodium hydroxide, the following generalization can be formulated for the formation of a hydroxide:

Metal oxide + water ? hydroxide

Hydroxides are compounds of a metal containing the same number of OH groups as the valence of the metal

Table 2.1. The most important hydroxides

Metal	Valence	Formula of the hydroxide	Designation of the hydroxide	Designation of the lye
Sodium Na	I	NaOH	sodium hydroxide	soda lye
Potassium K	I	KOH	potassium hydroxide	potassium lye
Calcium Ca	II	$Ca(OH)_2$	calcium hydroxide	lime water (milk of lime)
Copper Cu	II	$Cu(OH)_2$	copper hydroxide	(insoluble)
Aluminium Al	III	$Al(OH)_3$	aluminium hydroxide	(insoluble)
Iron Fe	III	$Fe(OH)_3$	iron (3)–hydroxide (rust)	(insoluble)

– Lyes are watery solutions of hydroxides

– Lyes have an etching effect, a soapy feel and colour red litmus paper blue

– Not all hydroxides are soluble in water

Table 2.1. lists the most important hydroxides.

2.6.2. Properties and Uses of the Most Important Lyes

Potassium lye and soda lye are strong lyes of very similar properties. In most cases it is of no consequence which of the two is used. Both lyes form soaps with oils and fats. Soaps formed with these lyes are soluble in water. That is why workpieces can be degreased with these lyes.

Lime water (lime of milk) is extensively employed to neutralize acids (see Section 2.7.2.3.) and as a flame–inhibiting paint.

Ammonium hydroxide. It was already mentioned in Section 2.4. that the nitrogen compound ammonia (NH_3) is dissolved in large quantities by water. The ammonia solution can be tested with red litmus paper. One will see that it becomes blue, i.e. ammonia solution is a lye. Part of the ammonia dissolved by the water has bonded with the water to form ammonium hydroxide:

$$NH_3 + H_2O \;?\; NH_4OH$$

ammonia + water ? ammonium hydroxide

That is why ammonia solution is also called ammonium hydroxide. This lye has a stinging smell which is caused by the ammonia that is only dissolved in the lye and has not bonded with the water so that it evaporates easily out of the water.

The compound NH_4OH differs in its set–up from other hydroxides by the fact that it contains no metal. In this particular case the metal is replaced by the so–called ammonia group NH_4. Similar to the OH group, NH_4 also arises in compounds. It is univalent and it can replace metals in the compounds.

Ammonium hydroxide is often employed to neutralize acids, i.e. to make them harmless (see Section 2.7.2.3. Neutralization).

Exercises and Questions

2.55. Which characteristic atom group is contained in the molecule of a lye?

2.56. Describe how soda lye is derived from sodium.

2.57. Why does sodium have to be stored in petroleum?

2.58. How can you identify a lye?

2.59. What is the difference between a hydroxide and a lye?

2.60. What kind of lyes do you know?

2.61. What is lime water and what is it used for?

2.62. What is ammonium hydroxide and what are its properties?

2.7. Salts

2.7.1. General Remarks

The word salt invariably conjurs up the idea of common salt. Yet there are many chemical compounds that are known as salts on account of their composition. Some of the most important salts have been compiled in table 2.2.

Table 2.2. Examples of salts

Name	Chemical designation	Formula
Common salt	sodium chloride	$NaCl$
Gypsum	calcium sulphate	$CaSO_4$
Marble	calcium carbonate	$CaCO_3$
Soda	sodium carbonate	Na_2CO_3

The formulas in table 2.2. show that each salt molecule contains one or more metal atoms. Common salt and soda contain the atoms of the metal sodium, while gypsum and marble contain the metal calcium.

Atom groups that have bonded with metals are contained in acid molecules. They are the residues that are obtained when one separates the hydrogen atoms from the acid formulas. That is why they are called acid residues (table 2.3).

Just as the NH_4 group of the OH group, acid residues have a certain valence that matches the number of hydrogen atoms present in the acid molecule.

Table 2.3. Acids and acid residues

Name of acid	Formula	Acid residue	Valence
Hydrochloric acid	HCl	Cl	I
Sulphuric acid	H_2SO_4	SO_4	II
Nitric acid	HNO_3	NO_3	I
Carbonic acid (carbon dioxide)	H_2CO_3	CO_3	II

Salts contain a metallic component and an acid residue.

Salts are formed when the hydrogen contained in acid molecules are replaced by metals.

2.7.2. Three Methods of Salt Formation

2.7.2.1. First Method

The subsequent tests demonstrate three methods by which metal and acid residue can be bonded into a salt.

Metal + acid ? salt + water

• Test 2.23.: Producing salt from metal and acid

Just as in Test 2.3., diluted hydrochloric acid is poured over a piece of zinc. When the development of gas has ended, the liquid is poured into a porcelain dish and evaporated. The white residue is the salt zinc chloride.

Zn	+	2HCl	?	$ZnCl_2$	+	H_2
zinc	+	hydrochloric acid	?	zinc chloride	+	hydrogen

• Test 2.24.: Production of iron chloride

Diluted hydrochloric acid is poured over iron filings in a test–tube. Hydrogen develops. When the development of gas has ended the liquid is poured into a porcelain dish and evaporated. The residue is a dirty green substance. This is the salt iron chloride.

Fe	+	2 HCl	?	$FeCl_2$	+	H_2
iron	+	hydrochloric acid	?	iron chloride	+	hydrogen

Application

Zinc chloride is used as a soldering flux. Skilled workers often produce their own zinc chloride solution. For this purpose a piece of zinc is dissolved in hydrochloric acid. In order to assure that no active acid is contained in the flux, there must still be a piece of undissolved zinc in the liquid.

2.7.2.2. Second Method

Metal oxide + acid ? salt + water

• Test 2.25.: Producing salt from metal oxide and acid

When magnesium is burnt a white powder known as magnesium oxide is formed.

2 Mg	+	O_2	?	2 MgO
magnesium	+	oxygen	?	magnesium oxide

Diluted hydrochloric acid is poured over magnesium oxide in a test–tube. The magnesium oxide is dissolved if the solution is slightly heated. No gas development is noticeable. After evaporating the clear liquid there will be a white salt residue which is magnesium chloride.

MgO	+	2 HCl	?	$MgCl_2$	+	H_2O
magnesium oxide	+	hydrochloric acid	?	magnesium chloride	+	water

• Test 2.26.: Production of copper sulphate

Black copper oxide is formed when copper is heated in the atmosphere.

2 Cu	+	O_2	?	2 CuO
copper	+	oxygen	?	copper(II)–oxide

If sulphuric acid is poured over the black copper (II)–oxide powder in a test–tube, then a clear bluish–green liquid is obtained. Its evaporation leaves a blue salt known as copper sulphate.

CuO	+	H_2SO_4	?	$CuSO_4$	+	H_2O
copper(II)–oxide	+	sulphuric acid	?	copper sulphate	+	water

Application

This second method of salt formation is employed to remove oxide skins on metal parts.

When copper parts are annealed the surfaces become covered with copper(II)–oxide. This coating can be removed by pickling the copper parts in hydrochloric acid. The following reaction takes place during this process:

CuO	+	2 HCl	?	$CuCl_2$	+	H_2O
copper(II)–oxide	+	hydrochloric acid	?	copper chloride	+	water

The copper chloride salt is dissolved in water. Rust, too, can be removed from steel parts by pickling in hydrochloric acid.

The acids must be neutralized after pickling to make them harmless. For this purpose the third method of salt formation is employed.

2.7.2.3. Third Method

acid + lye ? salt + water

• Test 2.27.: Production of common salt

A few drops of litmus solution are added to a soda lye in a beaker to produce a strong blue lye.

This blue colour will become gradually weaker when hydrochloric acid is slowly poured into the lye under constant stirring. A point is eventually reached when the solution is neither blue nor red, but rather violet. If one tastes this liquid one will find that it has a strong saline taste.

Evaporation of this liquid in a porcelain dish will leave a solid white residue. This residue is common salt or sodium chloride.

$NaOH$	+	HCl	?	$NaCl$	+	H_2O
soda lye acid	+	hydrochloric acid	?	sodium chloride	+	water

The third method of salt formation from acid and lye results in two neutral substances, namely salt and water. Neither of them have the characteristic properties of acids or lyes. This method of salt formation is known as neutralization.

Application

In order to remove rust from steel parts they are pickled in hydrochloric acid. After pickling this acid must be removed by thorough washing and by neutralization with a weak lye (e.g. lime of milk) to remove all traces of acid.

2 HCl	+	$Ca(OH)_2$	?	$CaCl_2$	+	2 H_2O
hydrochloric acid	+	lime of milk	?	calcium chloride	+	water

2.7.3. Properties of Some Salts

Ammonium Chloride, NH_4Cl

A white crystal salt of sharp saline taste. When pressed into rectangular blocks it is used to clean soldering irons (fig. 2.25.).

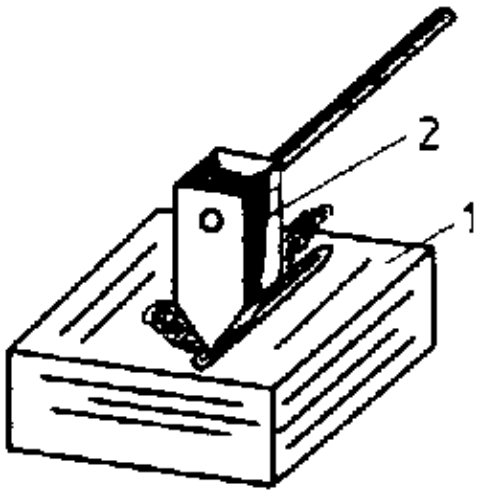

Fig. 2.25. Cleaning a soldering iron with ammonium chloride.

1 block of ammonium chloride (NH_4Cl);
2 soldering iron

The heated soldering iron becomes coated with black copper oxide which prevents the soldering tin from adhering to the soldering iron. The hot soldering iron becomes bright when it is rubbed on the ammonium chloride block. The ammonium chloride is decomposed under heat according to the following equation:

NH_4Cl	?	NH_3	+	HCl
ammonium chloride	?	ammonia	+	hydrogen chloride (hydrochloric acid)

The arising hydrogen chloride reacts with the copper oxide (second method of salt formation).

2 HCl	+	CuO	?	H_2O	+	$CuCl_2$
hydrochloric acid	+	copper(II)–oxide	?	water	+	copper chloride

Copper chloride and water are evaporated by the heat of the soldering iron.

Zinc Chloride, $ZnCl_2$

A white salt that is readily soluble in water. It is very hygroscopic, extracting the humidity contained in the atmosphere, thereby converting itself into a solution. The soldering solution used for soft soldering is a watery solution of zinc chloride. Section 2.7.2.1. described how soldering solution is produced. The soldering solution dissolves thin oxide coatings on work–pieces to assure good adhersion of the soldering tin on the surface of the workpiece.

Borax, $Na_2B_4O_7$

The white salt of boric acid (H_3BO_3) (boric acid is a solid substance). Borax melts at a temperature around 750°C. Molten borax dissolves many metal oxides. That is why it is used as flux for hard soldering (brazing) where it fulfils the same functions as the zinc chloride solution for soft soldering.

Copper Sulphate, $CuSO_4$

A brilliant blue salt that is readily soluble in water. It is employed in galvanizing for copper plating, and in workshops to prepare steel surfaces for marking–out. When a copper sulphate solution is brushed on to a

clean and grease–free steel surface a very thin copper film is precipitated out of the solution. The remaining solution is carefully wiped off. The copper coloured surface produces the necessary contrast so that the fine lines drawn with the scribing point become clearly visible.

Copper Acetate, $(CH_3COO)_2Cu$

This is the green salt of acetic acid and is a component part of verdigris. This is formed on parts made of copper and copper alloys when they come into contact with acetic acid (sour foods). Verdigris is very poisonous.

Sodium Carbonate, N_2CO_3 (soda)

A white salt that is readily soluble in water. The watery solution of sodium carbonate dissolves oils and fats. The solution is used to degrease work–pieces and machine parts.

Calcium Carbonate, $CaCO_3$ (lime)

A salt that is insoluble in water. In nature it occurs in the form of marble and limestone.

Lime is required in iron and steel production, in the glass industry, and in paper and sugar production.

Exercises and Questions

2.63. With what must metal be bonded to form a salt?

2.64. What are the three methods of salt formation?

2.65. For what is zinc chloride solution used in the metalworking industry?

2.66. Describe the production of soldering solution?

2.67. How can one remove chemical copper oxide coatings on copper parts?

2.68. How can one chemically derust steel parts?

2.69. How can one make acids harmless?

2.70. Describe the procedure of cleaning a soldering iron with a block of ammonium chloride.

2.71. What is borax and for what purpose is it employed in the metalworking industry?

2.72. How can one degrease workpieces?

2.73. What is verdigris?

3. Metals and Alloys

3.1. General Remarks

Metals still remain the most important materials in our age. Thousands of useful things are made of metals. Without them it would be impossible to produce motor vehicles, planes, looms machine tools or farm machinery.

Metal lines link towns and villages. They are used to transmit telegrams and telephone calls. Such lines conduct electrical current that is used to drive machines in factories or to provide lighting in the home.

Gas and petroleum are conducted from long distances through pipes made of metal.

About 70 of the 105 chemical elements known today have metal characteristics. About 20 of these play a vital role in industry. These pure metals, however, do not always have the properties that are required for specific applications.

This problem can be overcome by producing alloys of these pure metals. An alloy is obtained when molten metals are mixed. The metal with the higher melting point is melted first. Then the metal with the lower melting point is dissolved in the molten metal.

Alloys are metallic materials. Their properties always differ from the metals they are composed of.

Copper, for instance, is soft, malleable and ductile, but it is unsuitable for casting. By contrast, zinc is hard and brittle. It the two metals are mixed one obtains brass. This alloy features the ductility of copper, yet the hardness of zinc, and it can be readily cast.

An alloy can also consist of a metal and a non–metallic substance. Thus, steel is an alloy of iron and carbon.

A round rod of 5 mm diameter made of pure iron will rupture under a tensile force of 4310 N.

If 5 g of carbon dissolved in 1 kg of molten iron one obtains a very strong alloy known as steel. A round rod of 5 mm diameter made of steel has to be subjected to a tensile force of 13700 N before it will rupture (fig. 3.1).

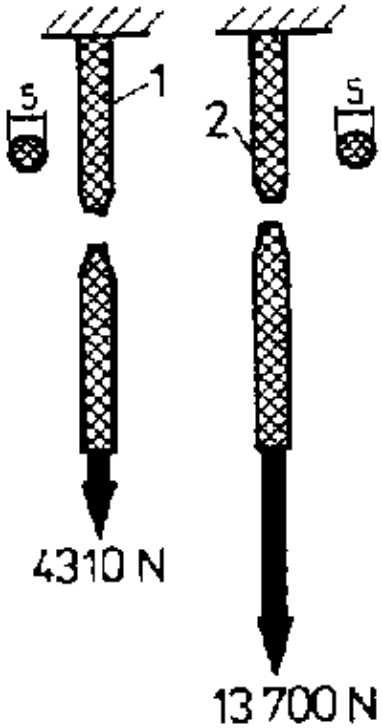

Fig. 3.1.

A rod of pure iron ruptures at a tensile force of 4310 N. A rod of steel of the same dimensions ruptures at a tensile force of 13 700 N.

1 rod of pure iron;
2 rod of steel

Alloys are solidified solutions. They consist of two or more metals, or of metals and non–metals. The properties of metals are modifiable within wide limits by alloys.

Alloys make it possible to produce metallic materials having specific properties. The highly developed industrialised countries produce and use sizeable quantities of some 500 metallic materials in the form of alloys.

Metallic materials are classified into ferrous and non–ferrous materials. The large group of non–ferrous materials is classified by their specific gravity into light–metal and heavy–metal materials (see table 3.1).

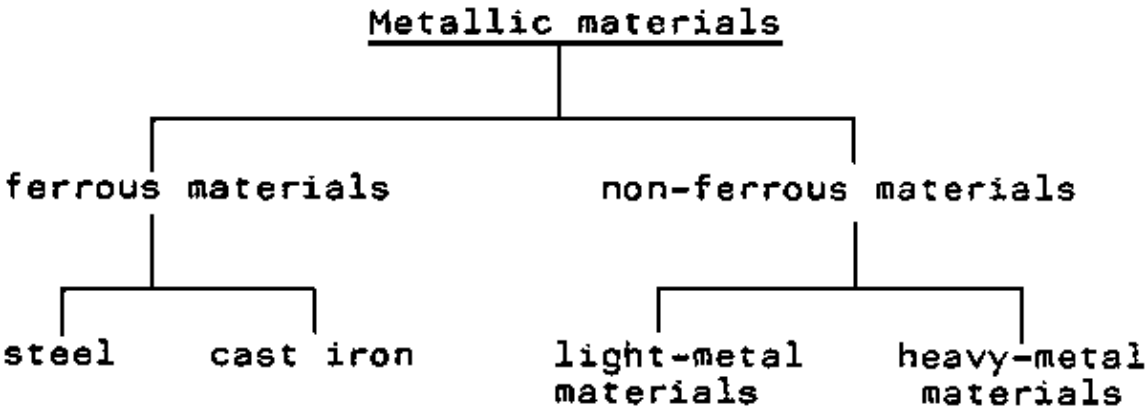

Table 3.1. Classification of metallic materials

Light metals and light–metal alloys have a specific gravity of less than 5 g/cm^3.

3.1.1. Characteristic Properties of Metallic Materials

3.1.1.1. Strength

Every metallic material consists of small material particles in the form of atoms or molecules. The bond between these individual particles is the result of the forces or cohesion prevailing between them. This cohesion has to be overcome if a metal is to be parted (cutting, dividing, tearing). The material counteracts partition by its internal resistance. This resistance is known as strength.

Strength is the resistance of a material to yielding or breaking, i.e. to partition.

3.1.1.2. Elastic and Plastic Deformation

Metallic objects are not always parted by the action of force. Some of them will only change their form.

The free end of a piece of steel strip clamped in a vice (fig. 3.2) can be easily bent to one side with a minimum of physical effort. The steel strip has changed its form. The steel strip instantly returns to its initial position when it is released. Hence, the change of form prevailed only as long as the force was being applied to the steel strip. This change of form was an elastic change.

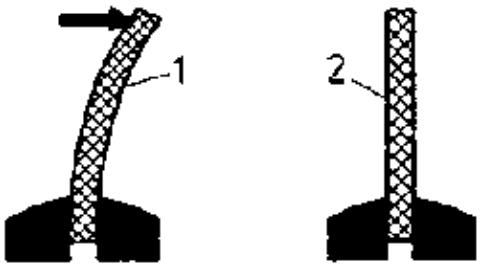

Fig. 3.2.

A low force does not result in permanent deformation. When the force is released the rod returns to its original position on account of its elasticity.

1 rod is deformed by force;
2 rod returns to its initial position

Elasticity is the ability of a material to return to its initial position after the force that has been acting upon it is released.

The forces of cohesion prevailing between the individual particles of the material return it to its original position when the load ceases.

Under other conditions, however, these particles of the material will not return to their original position. The exertion of more force on the free end of the steel strip will cause a greater change of force. When this force is released the change of form will remain partially or entirely (fig. 3.3.). This change of form is plastic.

Fig. 3.3.

Deformation becomes permanent when a higher force is exerted. The change of form is plastic

Plasticity is the ability of a material to remain in the form given to it by the action of force.

There is no material that is absolutely rigid and that does not change its form in the presence of loads. Even the smallest load will cause deformation that can be measured with corresponding measuring devices.

3.1.1.3. Maximum Load

Experience has shown that much higher loads can be suspended from steel wire than from aluminium wire of the same diameter. The maximum load points of the two wires can be established by rupture tests. The wires are loaded by weights (fig. 3.4). until they break. The test will show that the load on the steel wire was five times higher at the moment of rupture than the load on the aluminium wire. One can state that the tensile strength of steel wire is five times higher than that of aluminium wire of the same diameter.

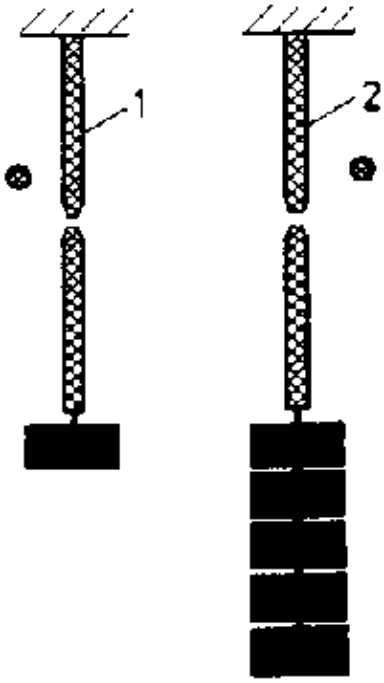

Fig. 3.4.

Steel has a higher tensile strength than aluminium
1 aluminium wire;
2 steel wire

If the maximum load of wires is established that have double the diameter, as shown in fig. 3.4. then one will find that the maximum loads of the aluminium wire and the steel wire is four times larger than the values obtained in the previously described test. How can this phenomenon be explained?

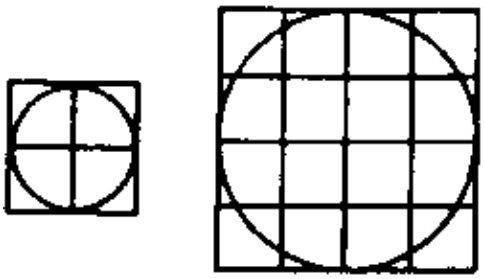

Fig. 3.5.

A circular surface of double the diameter has 4 times the cross−sectional area than a circular surface of only single diameter

Figure 3.5 shows that the cross−sectional area of a wire of double diameter is four times larger, Hence, there are four times as many particles at the cross−sectional area which exert a cohesive force that is four times higher than the cross−sectional area of a wire of single diameter.

The maximum tensile load of a body depends upon the material and upon the cross−sectional area of the body.

To compare the maximum loads of differing materials it is therefore necessary to conduct the load tests on bodies of identical cross−sectional area. A cross−sectional area of 1 mm^2 has been specified for metals.

The maximum tensile load of a body made of a certain material at a cross−sectional area of 1 mm^2 is known as tensile strength.

The specification of a tensile strength of 420 N/mm^2 or 420 MPa for a given grade of steel means that wire of a cross−sectional area of 1 mm^2 made of this steel will rupture at a tensile load of 420 N.

If the tensile strength of a material is known then it becomes possible to calculate the maximum tensile load of a rod made of the same material merely by multiplying the tensile strength with the cross−sectional area of the rod.

Table 3.2. Kinds of strength

Load	Effect	Example
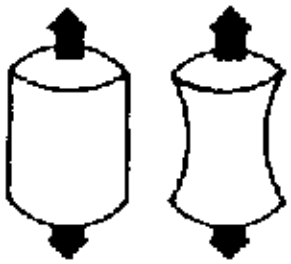	Tensile strength: The body is stretched. The space between neighbouring cross−sectional is extended.	
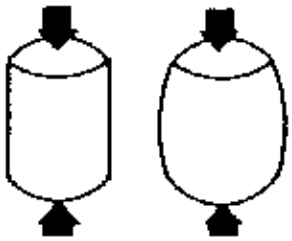	Compressive strength: The body is compressed. The space between neighbouring cross−sectional is shortened.	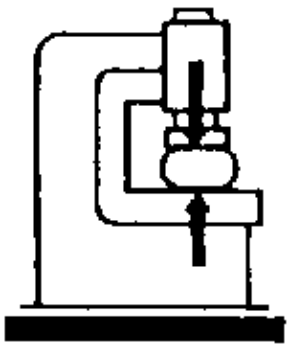

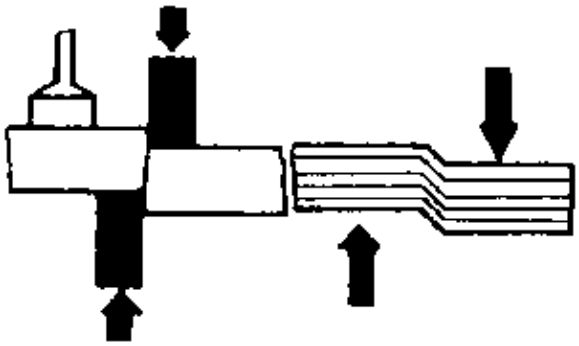	Shearing strength: Two adjoining cross–sections are shifted in relation to each other.	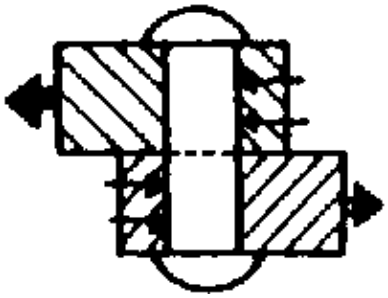
	Bending strength: The body is bent. Outer layers are compressed or stretched.	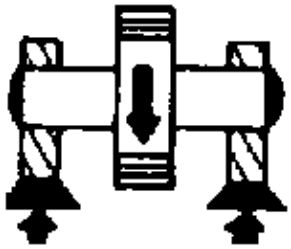
	Buckling strength: The body is laterally bent.	
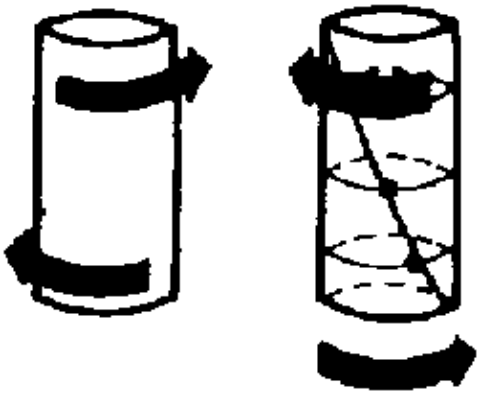	Torsional strength: The body is twisted. Neighbouring cross–sectional are twisted in relation to each other.	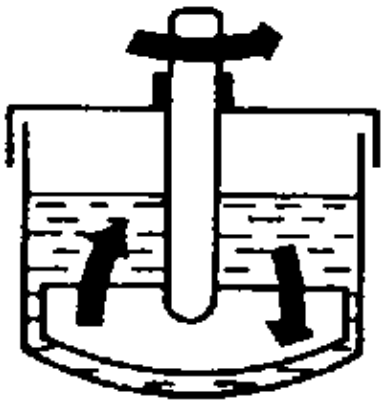

The tensile strength is the most frequently specified property of metals. Yet other forms of strength are also of importance in machine building. The kinds of strength are differentiated by the nature of the loads to which the machine parts are subjected. Table 3.2 gives a survey of the forms of strength.

Each kind of strength of the same material has a different strength value. Thus, steel has a tensile strength of 420 MPa and a shearing strength of 336 MPa.

3.1.1.4. The Properties 'Toughness' and 'Brittleness'

A precision indicator will reveal that a clamped glass rod behaves elastically when it is subjected to a small load (fig. 3.6). If, however, this load is increased the glass rod will break without previous plastic transformation. The breaking limit and the elastically limit are very close. Materials that behave in such a manner when subjected to tension, compression or flexure loads are called brittle materials.

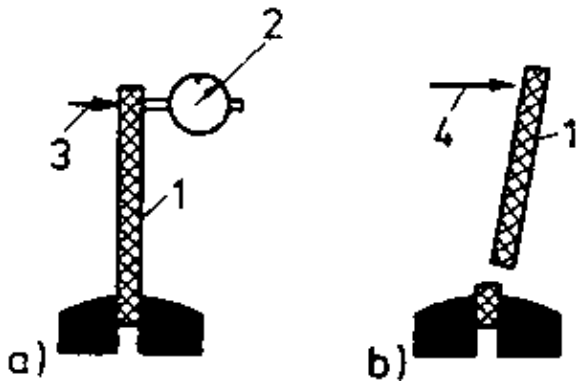

Fig. 3.6. Behaviour of brittle material (glass)

a) Glass is elastic when subjected to a low force
b) The glass rod fractures under a higher force without previously passing through a stage of plastic deformation

Materials that withstand several plastic deformations are known as tough materials (fig. 3.7).

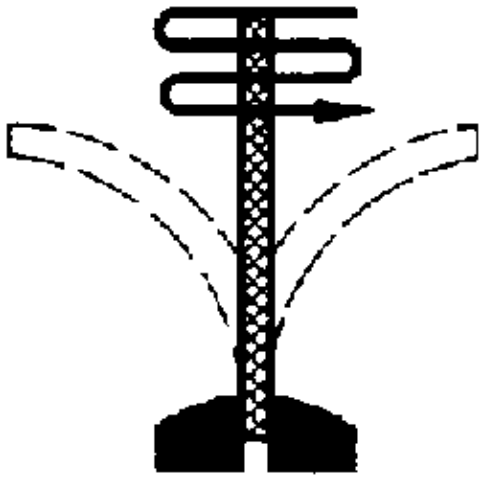
Fig. 3.7.

A rod made of a tough material can be plastically deformed several times

Examples of tough materials are:	lead, copper, aluminium and steel.
Examples of brittle materials are:	glass, porcelain, cast iron and hardened steel

3.1.1.5. Hardness

Hardness of the resistance of a material to penetration by another body made of a still harder material.

A groove can be scratched into the surface of a lead pipe with the corner of an aluminium sheet. The aluminium sheet penetrates the lead because it is harder than lead.

But it is not possible to score a steel sheet with aluminium plate because aluminium is softer than steel. Yet a steel sheet will scratch both the aluminium plate and the lead pipe. Steel is therefore the hardest of the three listed materials. The metals are arranged according to their hardness in figure 3.8; the metal on the left–hand side is always harder than the one on the right–hand side.

Fig. 3.8.

A few metals arranged according to their hardness. The hardness increases from left to right

3.1.1.6. Thermal Conductivity

Thermal conductivity is the ability of a material to transfer quantities of heat within the material from one point to another.

Figure 3.9 shows an assembly with which the thermal conductivity of different metals can be demonstrated. A strip each of copper, aluminium and steel are riveted to a circular steel plate.

The three strips are of equal length. A match head rests on each of the three strip ends.

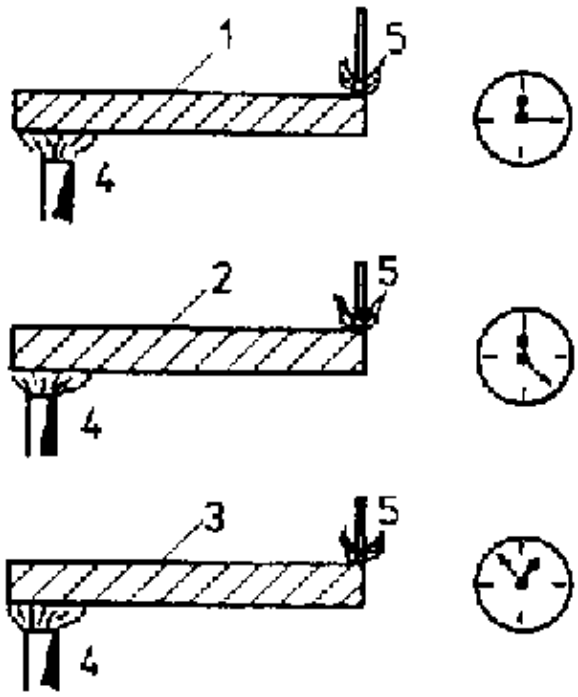

Fig. 3.9.

Copper is a better conductor of heat than aluminium. Aluminium is a better conductor of heat than steel.

1 copper rod;
2 aluminium rod;
3 steel rod;
4 gas burner;
5 match

When the centre of the circular steel plate is heated with a gas flame, the three strips of metal will conduct the heat to the matches. The temperature at the match heads will rise. When the ignition temperature of the matches has been reached they will ignite.

The first match to be ignited is the one resting on the copper strip, followed somewhat later by the one on the aluminium strip, and finally by the one on the steel strip. It can be deducted from this experiment that the thermal conductivity of copper is higher than that of aluminium, while aluminium has a higher thermal conductivity than steel.

The metals are arranged according to their thermal conductivity in figure 3.10. The thermal conductivity of copper is ten times higher than that of steel.

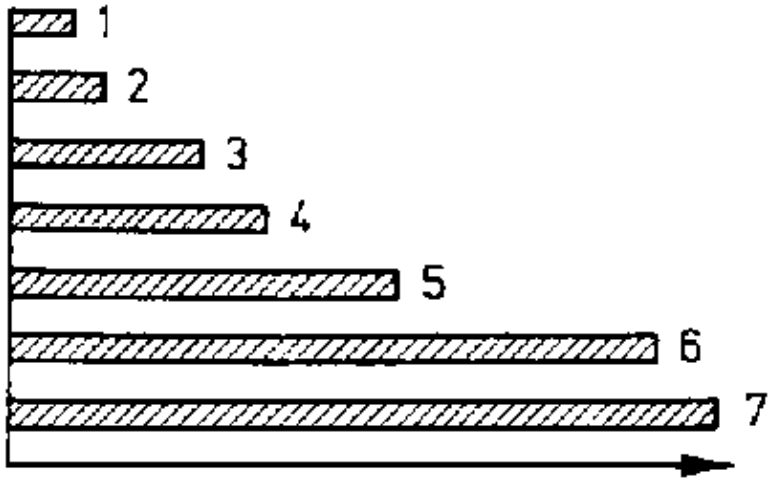

Fig. 3.10. The thermal conductivity of a few metals (the longer the red line, the higher the thermal conductivity).

1 steel; 2 bronze; 3 brass; 4 duraluminium; 5 aluminium; 6 copper; 7 silver

3.1.1.7. Electrical Conductivity

Electrical conductivity is the ability of a material to transmit electrical charges.

Electrical conductivity is differentiated according to conductors, semi–conductors and non–conductors (the latter are also known as insulators). Wires of differing metals, yet of identical diameter and length, will transmit differing quantities of current at an identical voltage (fig. 3.11). The poorer the electrical conductivity of a material, the smaller the current indicated by the measuring instrument.

3.2. Testing of Metallic Materials

3.2.1. Purpose of Testing

No visual difference can be established between the different types of steel because their appearance is very similar. Yet, if one type of steel is mistaken for another the consequences can be grave.

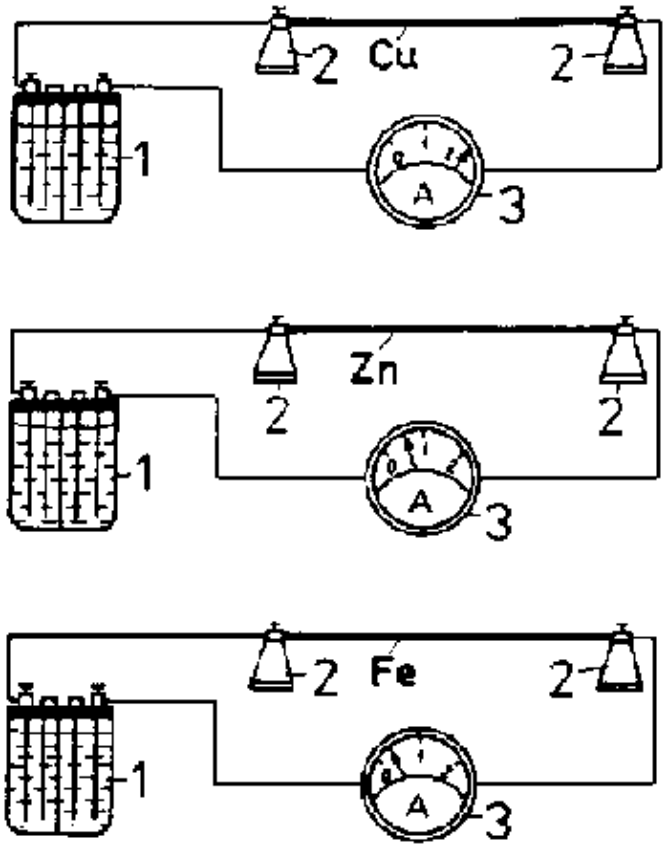

Fig. 3.11 Electrical conductivity related to the structure of the metals.

1 voltage source;
2 insulator;
3 ammeter

Example: A crankshaft is not made of high–alloy steel but mistakenly of common mild steel. The shaft will break when the engine into which it has been incorporated is set into operation. The failure of the engine and the resulting repair work cause extra high expenses. Furthermore, the rupture of the crankshaft can also be the cause of accidents. That is why testing methods are required for unmistakable determination of the type of material involved.

Frequently, it is a matter of establishing whether an existing material is suitable for a given application, whether its tensile strength is sufficient, whether it is sufficiently hard, or whether it is suitable for a certain processing method (bending, welding, forging).

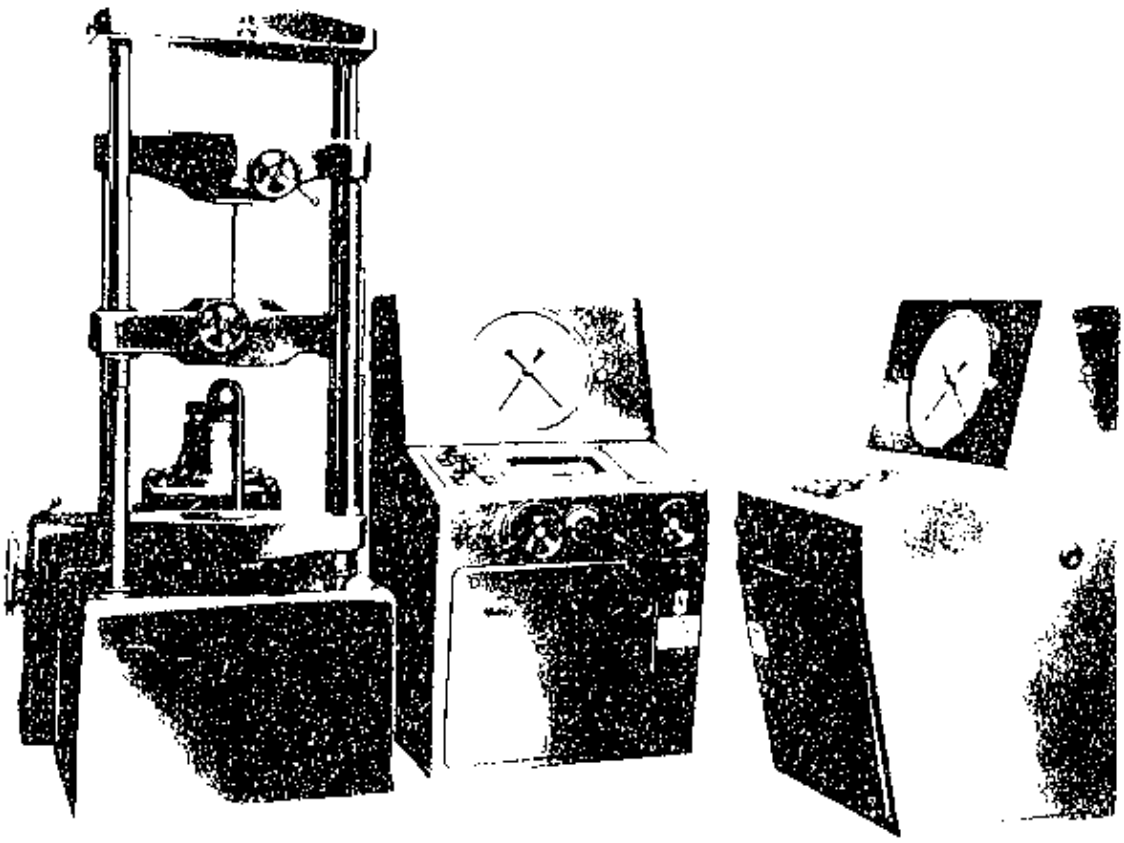

Fig. 3.12. Tensile strength testing machine (schematic representation)

1 specimen rod; 2 compressed−oil feed; 3 pressure gauge; 4 tensile strength graph

Large, well−equipped factories normally have their own laboratory in which the materials are exhaustively examined and tested by specialists. Simple tests can also be completed in the workshop, although such tests will only furnish information on the suitability of a material for a given purpose. In the laboratory, on the other hand, characteristic values are established which form the basis for the calculation of components.

3.2.2. Testing in the Laboratory

3.2.2.1. Determining the Tensile Strength

The tensile strength of a material is determined on a tensile strength testing machine. This is a special machine for materials testing (fig. 3.12.). A specimen rod of defined shape is clamped in the machine. The specimen is subjected to a uniformly progressing tensile force from nought up to the point of rupture of the specimen. The specimen rod is longitudinally rotated during this procedure. A special device in the machine plots a graph during the test (fig. 3.13.) from which the expert for materials testing can establish the characteristic values of the material, i.e. its elasticity limit and its tensile strength.

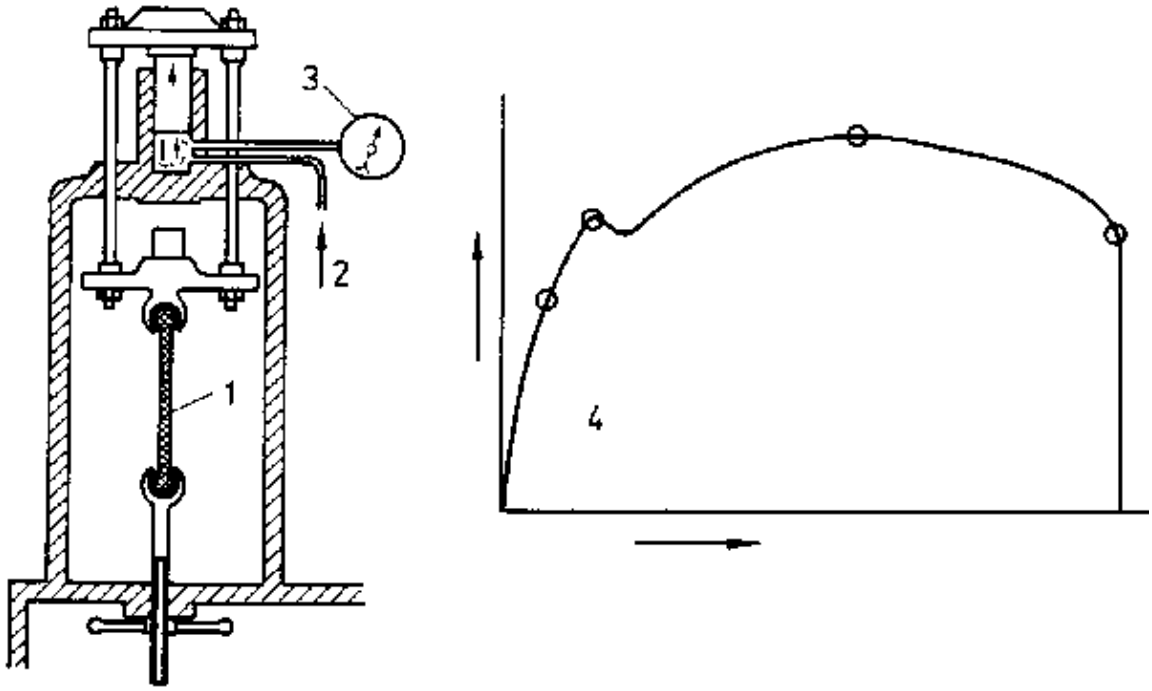

Fig. 3.13 Testing machine to establish the tensile strength of specimen rods

3.2.2.2. Notched–Bar Impact Strength

The parts of machines and motor vehicles are not only subjected to uniform loads but also to knocks and jolts. Material cross–sections are particularly endangered at the point of notches. Notched–bar impact testing establishes whether a material is tough enough to withstand knocks.

A notched specimen bar of defined dimensions (fig. 3.14a) is destroyed in a pendulum impact testing machine.

The pendulum hammer (fig. 3.14) is raised to a certain height. Its impact strength is the product of the height and gravity of the pendulum hammer. When the pendulum hammer hits the specimen, part of its impact energy is absorbed for the destruction of the bar. The energy remaining in the pendulum hammer lifts it to a certain height at the other side of its pendulum swing. The impact work is therefore the difference between the total impact energy and the remaining energy.

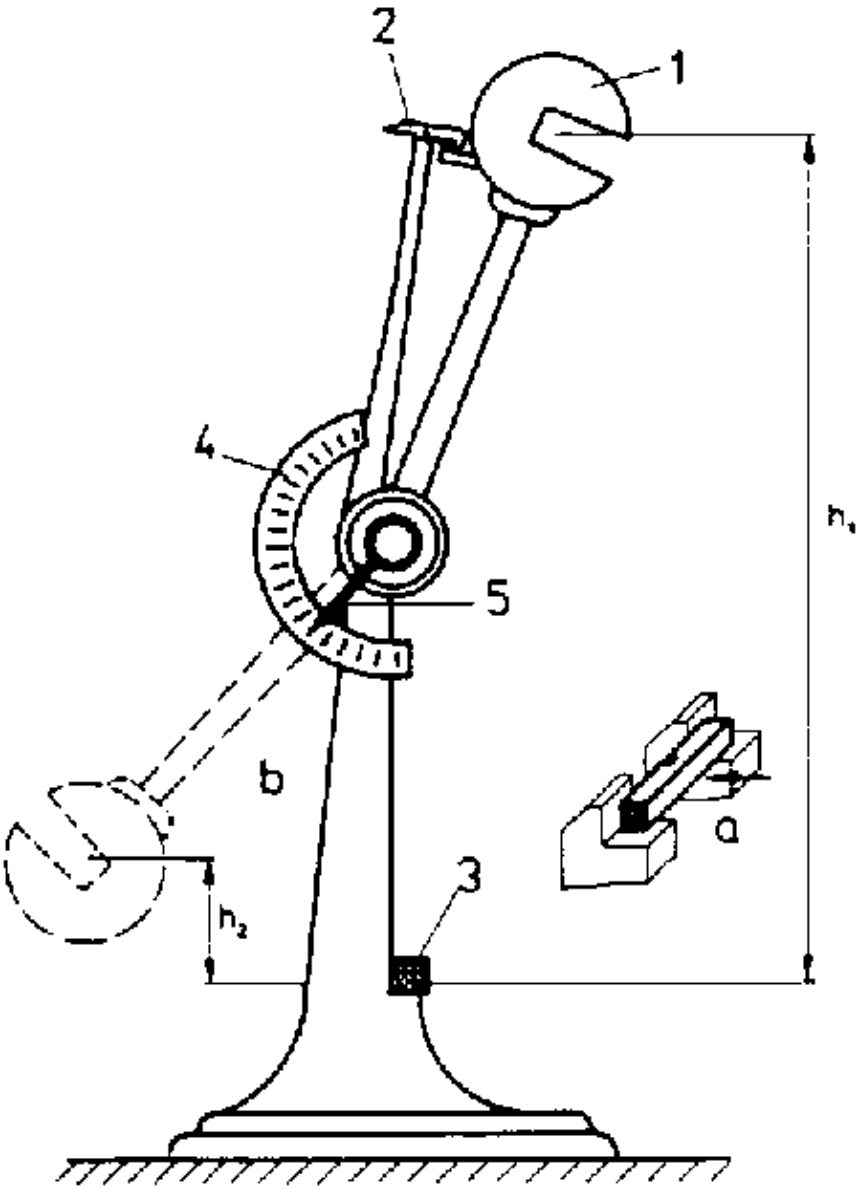

Fig. 3.14. Notched–bar impact testing machine.

a) Specimen in holder
b) Pendulum hammer

Notched–bar impact testing makes it possible to compare the toughness of different materials.

3.2.2.3. Brinell Hardness Testing

A hardened ball of the diameter D is pressed into the specimen that is to be tested with the test force F (fig. 3.15) where normally:

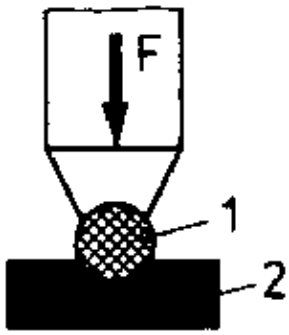

Fig. 3.15. Schematic representation of Brinell hardness test.

1 ball head;
2 workpiece
D = 10 mm and F = 30 000 N

The Brinell hardness test is completed on a press especially designed for this purpose (Fig. 3.16).

The diameter of the ball impression is measured with a measuring magnifier. The hardness number can be then found in tables on the basis of the established diameter.

The higher the hardness number, the higher the hardness of the tested material.

Since the penetrating ball always has to be harder than the material that is to be tested, the Brinell hardness testing method is unsuitable for hardened steel.

3.2.2.4. Vickers Hardness Testing

Hardness testing by the Brinell and Vickers methods is very similar, except that the hardened steel ball of the Brinell method is replaced by a diamond pyramid for the Vickers method.

An optical measuring instrument is employed to measure the mean value of the two diagonals of the pyramidic depression (Fig. 3.17). This is then used as the basis for extracting the hardness value (Vickers) from corresponding tables.

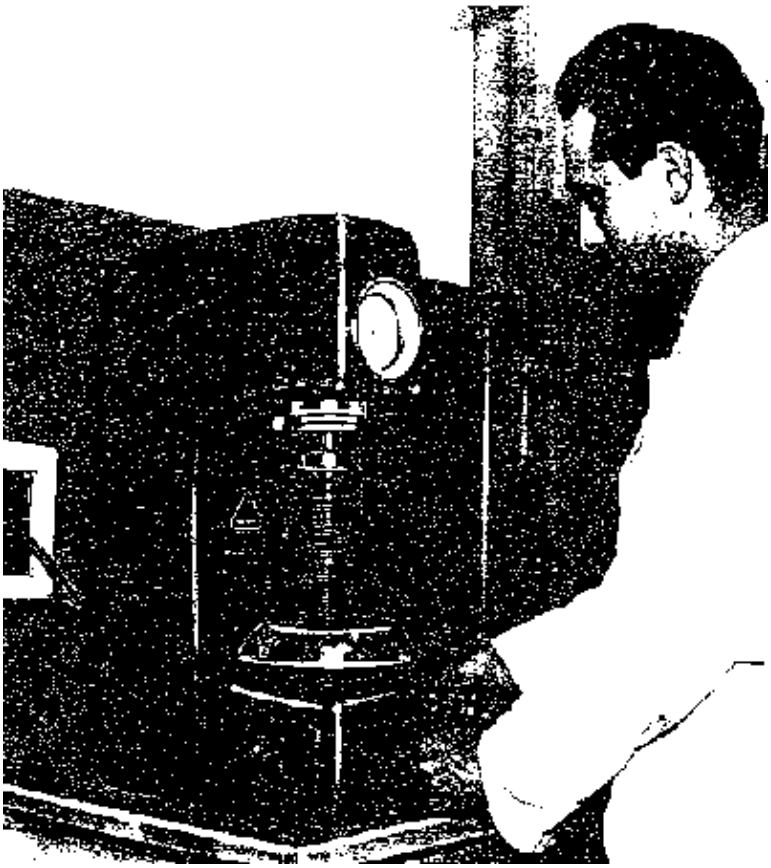

Fig. 3.16. Brinell press

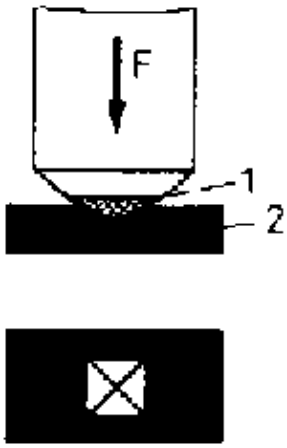

Fig. 3.17. Schematic representation of Vickers hardness test.

1 diamond pyramid;
2 workpiece

The higher the hardness number, the higher the hardness. The Vickers hardness testing method is well suited for hard and soft materials.

3.2.2.5. Shore Rebound Hardness Testing

A small hammer fitted with a rounded diamond tip falls freely down a graduated glass tube from a constant height on to the surface of the material under test. The elasticity of the material causes the hammer to rebound. The height of rebound is a measure of the hardness of the material (fig. 3.18). The harder the material, the higher the rebound.

The Shore rebound hardness testing method is used mainly to establish whether all steel workpieces have the same hardness after hardening.

3.2.2.6. Checking for Surface Cracks

Magnetic field lines are employed to reveal the finest cracks in the surface of a workpiece which would be otherwise too fine to detect visually. This presupposes, however, that the workpiece is made of a material that is attracted by a magnet, e.g. steel.

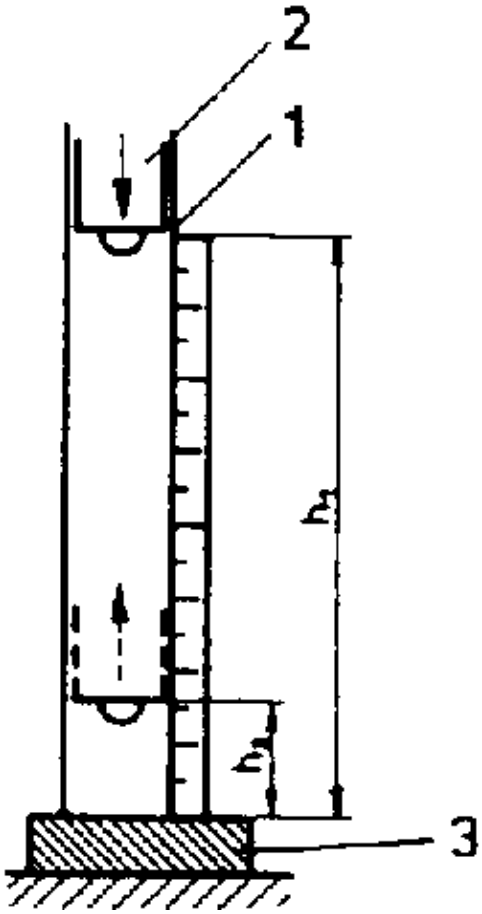

Fig. 3.18. Schematic representation of Shore hardness test

A mixture of iron powder and petroleum is poured on to the workpiece. The workpiece is then mounted between the two poles of an electro−magnet.

The magnetic field lines passing through the workpiece hit upon obstacles at the points of cracks and by−pass these outside the workpiece. These are the points where iron powder is accumulated (fig. 3.19). Only surface faults, or those immediately under the surface, are detected by this method.

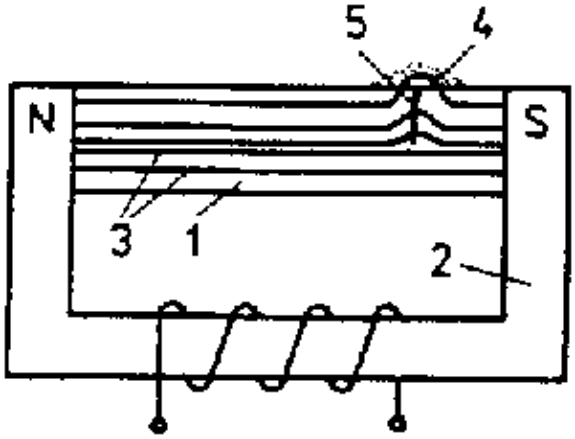

Fig. 3.19. Schematic representation of the procedure to establish surface cracks in workpiece with the help of magnetic field lines.

1 workpiece; 2 electromagnet; 3 magnetic field lines; 4 accumulation of iron powder; 5 crack

3.2.3. Testing Methods in the Workshop

3.2.3.1. Sounding–out

Rods, plates, hollow bodies, bolts and riveted joints are tapped with a light hammer. Cracks and loose joints are detected by a distorted instead of a clear ringing sound.

3.2.3.2. Spark Testing

–The approximate composition of steel can be determined by holding a steel sample against a rotating grinding wheel and producing sparks. The colour and shape of the sparks are an indication of the kind of steel involved (see table 3.3).

3.2.3.3. Hardness Test

A file is used to establish whether a steel has been sufficiently hardened. If a file of known hardness cuts into the workpiece, then the work–piece will be softer than the file; alternatively if the file does not cut into the workpiece the latter will be harder than the file.

3.2.3.4. Fracture Test

If there is no fresh fracture a sample of the material is clamped in a vice and broken. The kind of fracture indicates whether the material is brittle or tough. Furthermore, the form of heat treatment of steel can be recognized from the surface of the fracture.

Table 3.3. Spark testing

Material	Spark picture	Description
	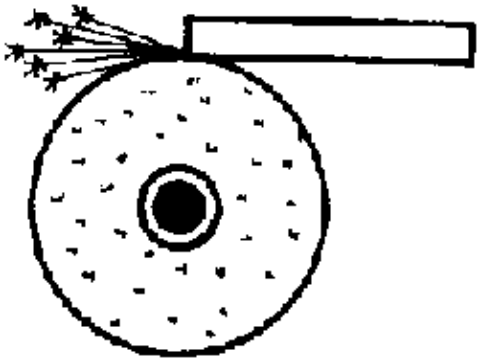	
Cast iron		sparse red streaks with spherical ends and isolated stars
Mild steel	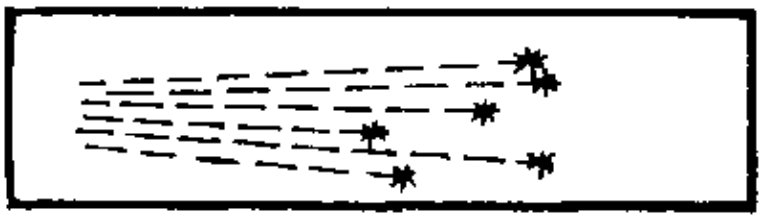	straw–yellow sparks; the bright streaks end in long drops

Tool steel 1 % C		bright yellow sparks which ramify into streak bundles
Alloyed steel High–speed steel		dark red, medium long streaks with short drops

Hardened steel:	fine–grain layer at the edge and fibrous fractured area
Unhardened steel:	course fibrous fractured area
Workpiece was cracked:	the old point of fracture is dark while the fresh fracture is light

3.2.3.5. Bending Test

The bending test establishes the toughness of a material (its formability). For this purpose a sample of the sheet is bent by 180 over a mandrel (fig. 3.20). No cracks should be visible on the external surface. The smaller the mandrel diameter, the higher the toughness of the material. The ratio between mandrel diameter and plate thickness is a characteristic value when comparing samples of differing thickness.

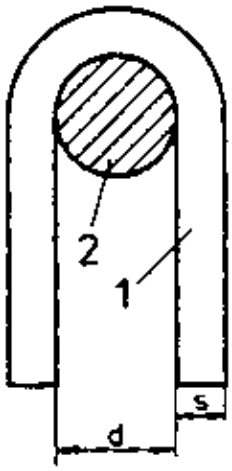

Fig. 3.20. Folding test

1 specimen sheet;
2 mandrel;
d = mandrel diameter;
s = sheet thickness

Exercises and Questions

1. What is an alloy?

2. When are metals alloyed?

3. What are light metals?

4. What is to be understood under the term 'strength'?

5. How can one differentiate between plastic deformation and elastic deformation?

6. Explain tensile strength.

7. At which tensile force would a square rod of 5 mm edge length fracture if it is composed of steel of 350 MPa tensile strength?

8. Describe the material properties 'tough and brittle

9. Name three tough and three brittle materials.

10. What is hardness?

11. How can one prove that aluminium sheet is softer than steel sheet?

12. How is the tensile strength of a material established in the laboratory?

13. Describe the notched–bar impact testing method.

14. What is established by notched–bar testing?

15. Describe the Brinell hardness testing method.

16. For which materials is the Brinell hardness testing method unsuitable?

17. What is the difference between Vickers and Brinell hardness testing?

18. How can one establish fine cracks in a work–piece with the help of magnetic field lines?

19. How does spark testing reveal the difference between tool steel and mild steel?

20. How can a file be used to differentiate between a hardened and an unhardened workpiece?

21. What simple means can be employed in the workshop to establish the toughness of materials?

3.3. Ferrous Metals

3.3.1. General Remarks

Chemically pure iron is useless in industry because it is too soft. Iron is only employed in an alloyed condition. Metallic additions (manganese, copper, nickel, etc.) or non–metallic substances (carbon, silicon, sulphur, etc.) are typical alloying additives, the most important one being carbon.

The two most widely known grades of iron are steel and cast iron. Both of them are derived from pig iron.

Pig iron is smelted out of iron ore in a blast furnace.

3.3.2. Iron Ores

Iron ore is an iron–bearing mineral that is found in many parts of the world. Iron ore deposits are usually locate deep down in the earth.

The iron contained in the mineral does not exist in its elementary form but rather as a chemical compound. Iron ores are classified according to the chemical compound in which the iron is present (table 3.4).

Table 3.4. The most important iron ores

Name of the ore	Iron compound	Iron content in 100 kg ore
Magnetic iron ore	Fe_3O_4 iron(II,III)–oxide	60 to 68 kg
Red iron ore	Fe_2O_3 iron(III)–oxide	40 to 60 kg
Brown iron ore	FeO(OH) hydrated iron oxide	30 to 45 kg
Spathic iron ore	$FeCO_3$ iron carbonate	25 to 30 kg

Most of the ores are subjected to a dressing treatment before they are fed into the blast furnace. All rocks that do not contain iron are sorted out, while the actual ore is reduced to a certain piece size. Sand and clay are washed out of the ore. The ore is then usually roasted, i.e. it is heated under a blast of air. This evaporates all water, and the chemical compounds FeO(OH) and $FeCO_3$ are converted into iron oxide. The roasting process diminishes the bulk weight of the ore by about one third, thereby saving transport costs.

3.3.3. Derivation of Pig Iron

The dressed ore is smelted in the blast furnace. The iron is extracted from its chemical compound and smelted out of the rock.

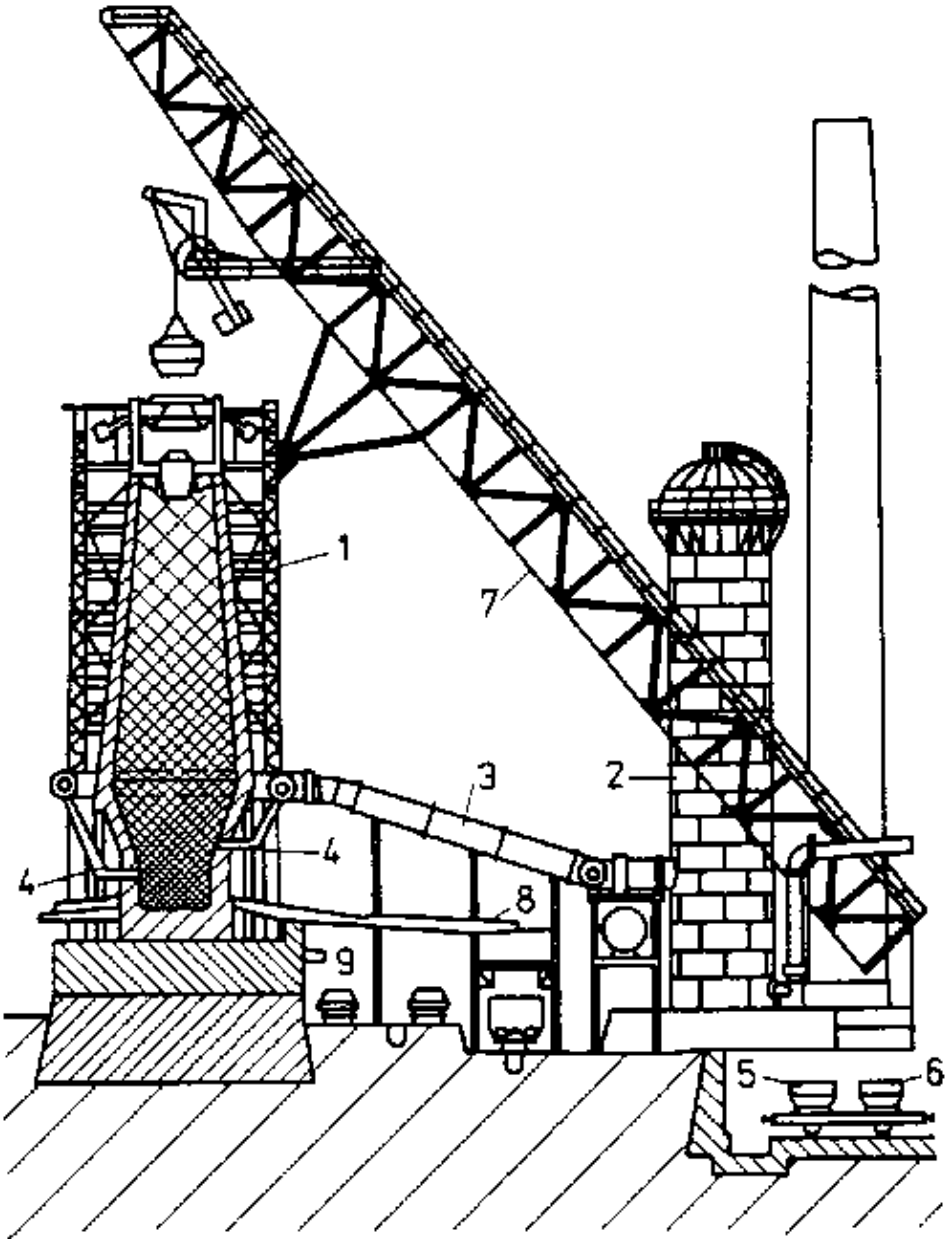

Fig. 3.21 Schematic representation of a blast furnace.

1 blast furnace; 2 hot blast stoves; 3 blast duct; 4 blast nozzles; 5 container for ores; 6 container for additives; 7 skip; 8 tapping point for slag; 9 tapping point for pig iron

A blast furnace is a circular shaft (fig. 3.21) of a height of about 30 m, and a diameter of up to 7 m at its widest point. The furnace walls are lined with fireclay refractory brickes that are kept in position by a steel bracing frame. Ores, fuel (coke) and fluxes are raised to the top of the furnace by the inclined skip. The ores, fluxes and coke are deposited in alternating layers. The fluxes bond with the ore components as the temperature inside the furnace reaches the melting point of the ore. The rock components are transformed into molten slag. The kind of fluxes added depends upon the type of iron ore involved. Limestone is most commonly used as flux.

Coke is employed as fuel. Large quantities of air are required for intensive combustion. Compressed air is blown into the base of the furnace through 20 nozzles arranged above the slag notch. The air is heated to a temperature of 700 to 900°C by hot blast stoves before it is blown into the furnace. The hot blast stoves consist of a steel–plate cylindrical shell of a diameter of 6 to 8 m and a height of between 20 and 30m. The interior of the cylinder is filled with a checkerwork of refractory bricks that are heated by the combustible 'top gases' formed within the blast furnace and extracted at its top. When the checkerwork has reached the desired temperature, the 'top gas' is conducted to the next hot blast stove. Compressed air is then forced into the stove where the heat of the refractory checker–work is transmitted to the air. A blast furnace plant is supplemented by at least three hot blast stoves. Two of them are being heated, while the third one is heating the blast air. Air heating saves considerable quantities of fuel (coke).

The coke at the base of the furnace is burnt, forming CO_2 that is reduced to CO as it passes upwards though the incandescent coke (see Section 2.4.2.2.). This, and the actual carbon, reduce the iron oxide to a spongy iron.

$Fe_2O_3 + CO$? $2\ Fe + 3\ CO_2$

$Fe_2O_3 + 3\ C$? $2\ Fe + 3\ CO$

The hottest point within the furnaces prevails at its widest point. This is where silicon, manganese and phosphoric compounds are reduced. Silicon, manganese, phosphoric and carbon are alloyed with the iron, thereby lowering the smelting point of the iron alloy so that it becomes molten.

The molten iron alloy, known as pig iron, collects at the base (the heart) of the furnace, with the lighter slag floating on top. The molten iron is collected in large ladles. The pig iron is tapped every four to six hours by breaking through the clay plug of the tap hole. The pig iron is collected in ladles or it is allowed to flow down iron runners into the pig bed – a series of sand moulds on the floor of the foundry hall – where it solidifies into ingots (fig. 3.22.).

The blast furnace slag is used to produce cement and slag bricks or ballast for roadmaking.

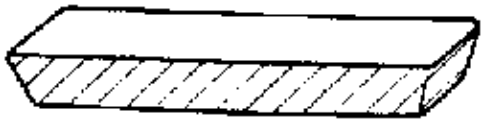

Fig. 3.22. Pig iron ingots

Iron metal produced in a blast furnace is known as pig iron. It contains between 3 and 6 per cent carbon as well as silicon, manganese, phosphorous and sulphur.

Pig iron is brittle and melts at temperatures between 1050°C and 1200°C without passing through a gradual softening stage. This is the reason why it is not malleable.

A difference is made between white pig iron and grey pig iron. White pig iron contains a large amount of manganese. This prevents the expellation of carbon during transition from molten to solid state. Its name is derived from the white colour of breakage surfaces.

White pig iron is the starting product for the production of steel.

Grey pig iron contains more silicon, as well as carbon in the form of flaked graphite, thus giving the breakage surface its characteristic grey colour.

Grey pig iron is processed into cast iron.

Exercises and Questions

1. Why is chemically pure iron useless for machine building?

2. What is iron ore?

3. Describe a blast furnace.

4. Why is the air that is consumed by a blast furnace preheated?

5. What kind of fuel is used to heat a hot blast stove?

6. What is the purpose of the coke in a blast furnace?

7. What is the blast furnace slag used for?

8. What is pig iron?

9. What is the difference between white pig iron and grey pig iron?

10. What raw material is made of white pig iron?

3.3.4. Production of Steel

Steel is an iron material that is workable in cold or hot condition without after–treatment. Its carbon content is not more than 2%, i.e. one kilogram of steel does not contain more than 20 g of carbon.

Steel is made of pig iron. This requires the following measures:

1. Removal of the carbon contained in the pig iron
2. Removal of the admixtures (silicon, manganese, sulphur and phosphorous) contained in the pig iron

These objectives are achieved by burning (oxidation) these substances contained in the pig iron a process that is known as refining. The oxygen required for this purpose is obtained from the air as it is blown either through or over the molten pig iron.

3.3.4.1. Air–Refining Process

The air–refining process involves an approximately pear–shaped refractory–lined steel vessel provided with trunnions so that it is rotably mounted. This vessel is known as a converter (fig. 3.23). Nozzles (tuyeres) are arranged in the bottom of the converter which blow the air through the molten iron.

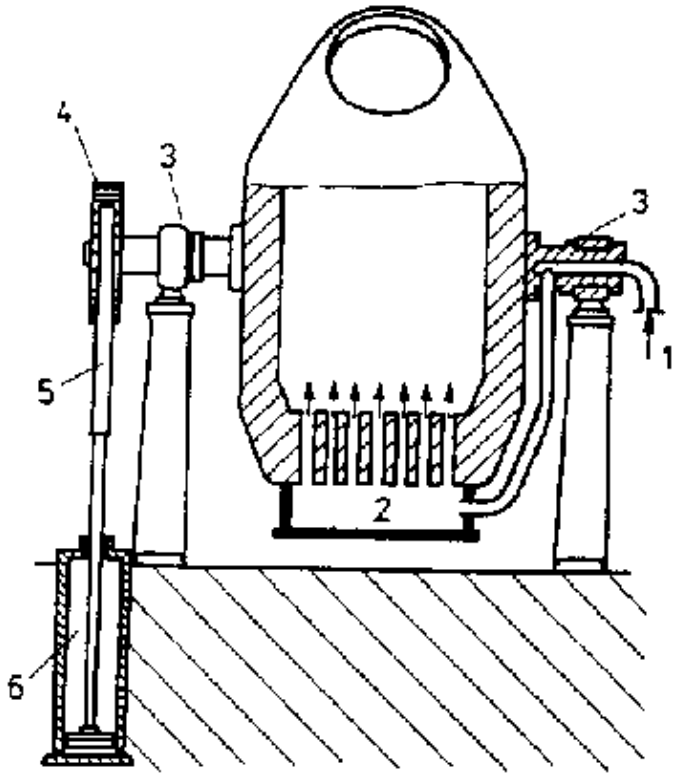

Fig. 3.23. View and cross–section of a converter.

1 air feed;
2 air nozzles (tuyeres);
3 trunnions;
4 gearwheel;
5 geared rack;
6 hydraulic cylinder

The converter is brought to its horizontal charging position to fill it with molten metal of a temperature of about 1600°C (fig. 3.24). It is then raised to an upright position and air, nowadays enriched with oxygen, is blown into the converter. Admixtures such as carbon, silicon, and sulphur, are removed by oxidation. The heat generated during this process keeps the charge in a molten state. The oxidation products are silicon dioxide, carbon monoxide, carbon dioxide and sulphur dioxide. The silicon dioxide forms slag on the molten metal. The other products are gaseous and are expelled.

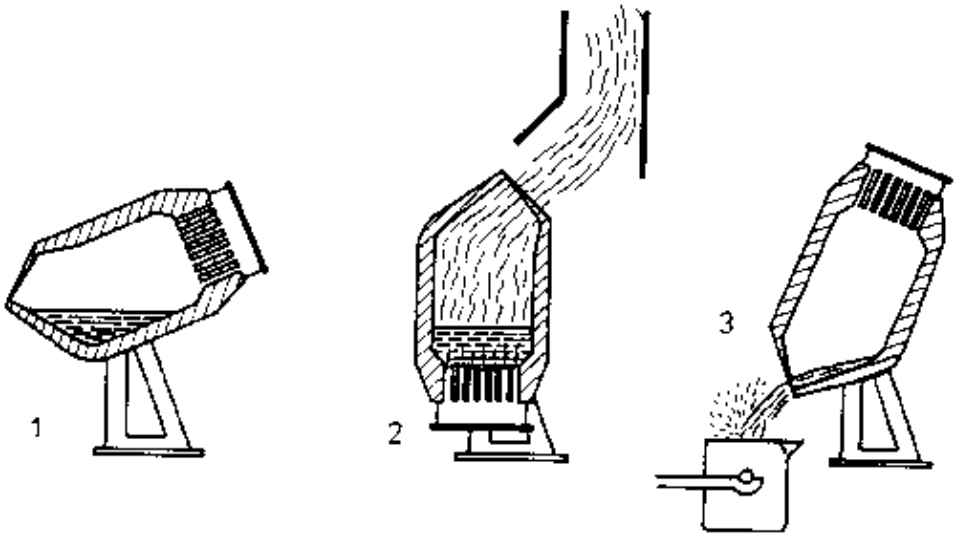

Fig. 3.24. The three positions of the converter during air refining.

1 charge; 2 air refining; 3 discharging

Lime is added to the pig iron in the converter if the pig iron contains phosphorous (from phosphoric ores). The phosphorous is oxidized into phosphoric pentoxide which bonds with lime. This compound floats as slag on the molten metal.

All impurities and admixtures contained in the pig iron are burned after 15 to 20 minutes. Since iron that contains not carbon is technically useless recarburization is necessary. For this purpose a certain amount of ferro−manganese is added to the molten metal. Ferro−manganese, or spiegeleisen, is an alloy of iron, manganese and carbon. The quantity of ferro−manganese added depends upon the kind of steel that is to be produced. Carbon contents between 0,05 and 1.7 per cent are required for the different grades of steel.

The molten, recarburized steel is poured into a ladle (fig. 3.24) from where it is discharged into ingot moulds. The steel solidifies into ingots that are processed into sections, sheets or wire.

3.3.4.2. Open−Hearth Steel Making

A multitude of operations are required from ore mining to steel making. That is why it is economical to recycle the steel scrap arising in industry for remelting. This requires a temperature of at least 1700°C. An open−hearth furnace (fig. 3.25) is capable of developing such high temperatures. Its principle is shown in fig. 3.26. Heating chambers are arranged under the actual open−hearth furnace. The lining of these chambers consist of refractory bricks. These heating chambers are preheated. The fuel gas and the air required for combustion are each passed through a chamber and preheated before this gas−and−air mixture is burned over the iron in the hearth. The hot waste gases flow through the flues on the other side of the furnace and are passed through the cold heating chambers to bring them back to a red−hot state for gas and air preheating. This regenerative heating system absorbs a considerable proportion of the heat of the waste gases before they are expelled through the chimney stack. This recovered heat is used for gas and air preheating so that the combustion temperature can be raised to the required level.

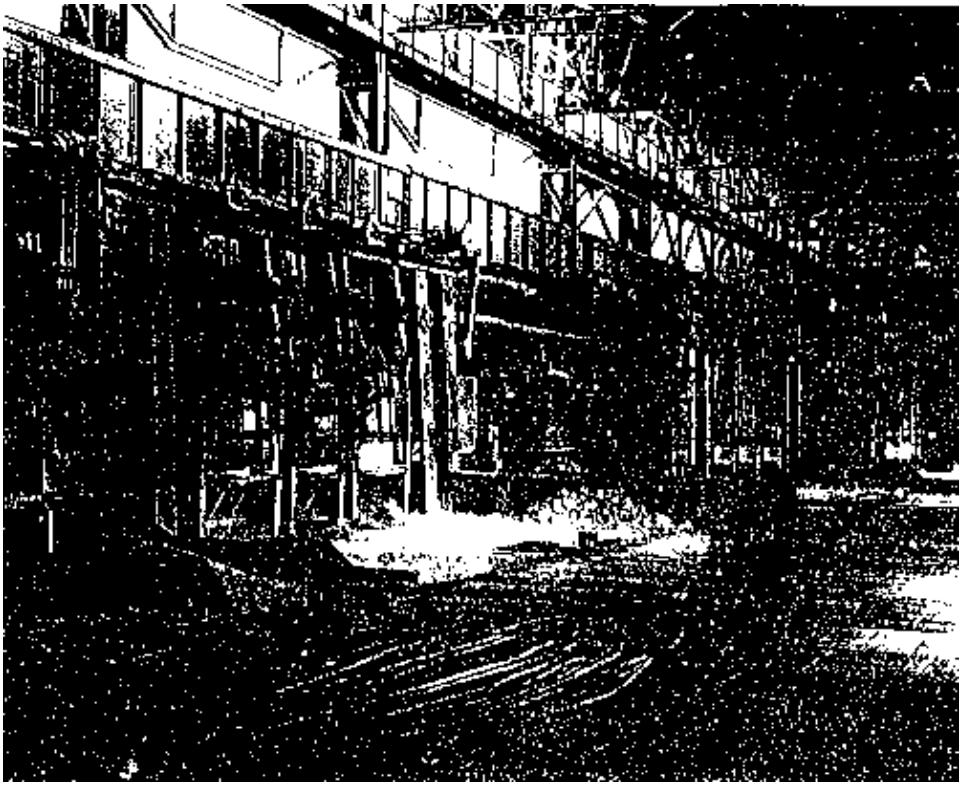

Fig. 3.25. Platform of an open−hearth furnace

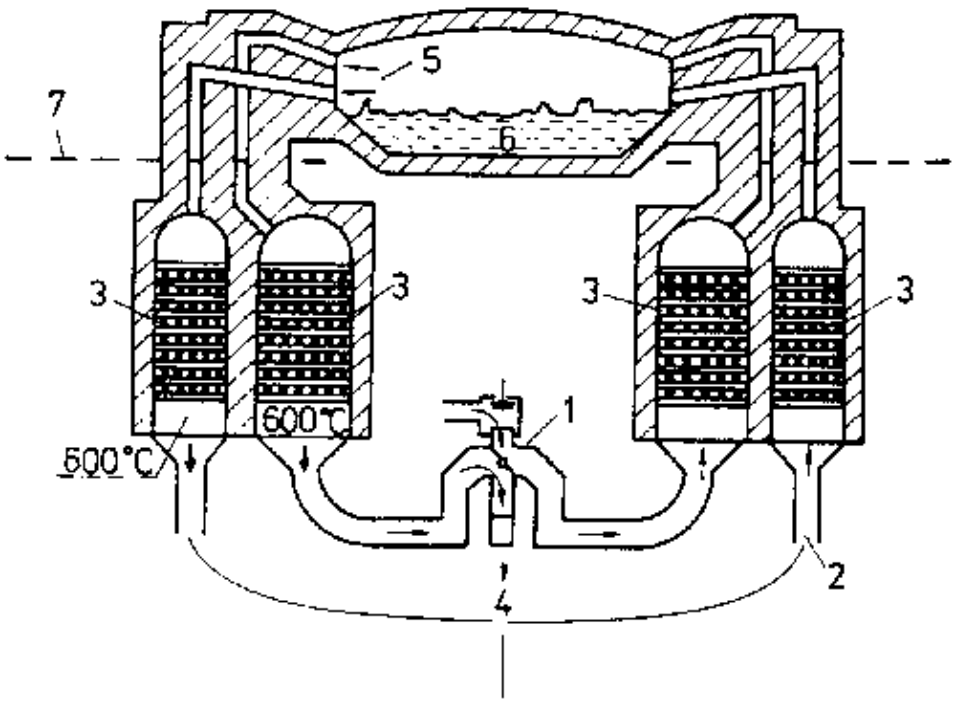

Fig. 3.26 Schematic representation of an open–hearth furnace.

1 reversing valves for air; 2 gas; 3 refractory grate; 4 to chimney stack; 5 waste gases; 6 steel melt; 7 furnace platform

The open–hearth furnace is charged with pig iron and scrap. The oxygen that is needed for the oxidation of the carbon, sulphur and silicon is contained in the fresh air that is blown through the scrap on the grate, and it is added to the combustion gas. After all undesireable admixtures contained in the pig iron have been burned, recarburization is completed (similar to the air refining process).

Steel produced by the open–hearth furnace has better mechanical properties than steel made by air refining. It reaches a tensile strength of up to 700 MPa and is used primarily for building work for high–rise structures, bridges and for machine building.

Open–hearth steel is the customary grade of steel that is employed for all parts that are subjected to normal stresses and loads.

3.3.4.3. Manufacture of Electric Furnace Steel

Steel of exceptionally high purity, and therefore of the finest quality, is made in the electric arc furnace. Electric furnace steel is used for the fabrication of turbines, tools and machine parts that are subjected to very high loads. The metal in the electric arc furnace (figs. 3.27 and 3.28) is heated by an electric arc instead of the customary gas–air combustion mixtures. This means that the steel cannot be contaminated by the fuel. The electric arc burning between the carbon electrode and the melting steel has a temperature of about 3000 °C.

Carbon and other undesirable admixtures are burned by adding oxides that give off their oxygen. Samples can be continuously withdrawn to assess to composition of the steel. Depending upon the results of analysis, substances can be added to the steel which either provide the steel with carbon or bond the phosphorous and sulphur contained in the steel.

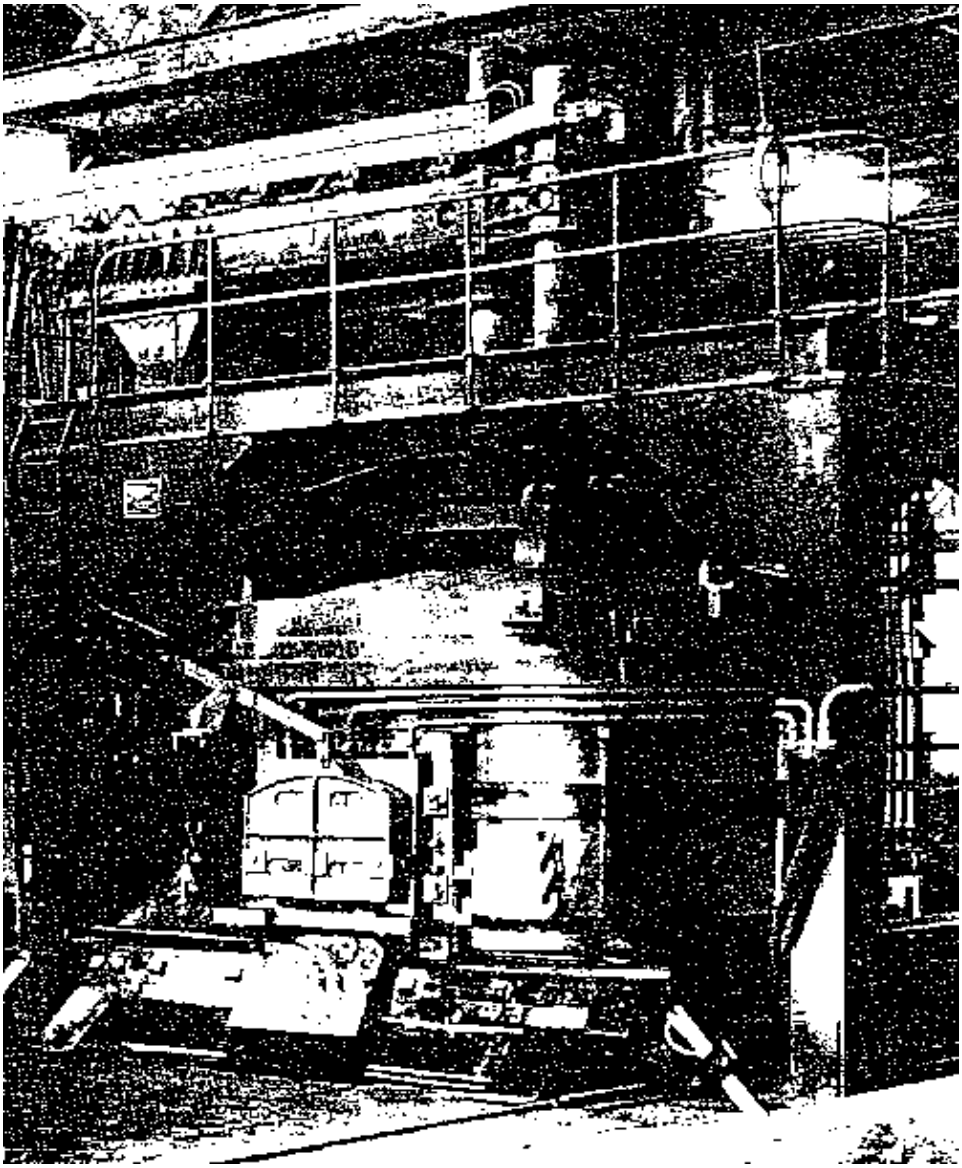

Fig. 3.27. Electric arc furnace

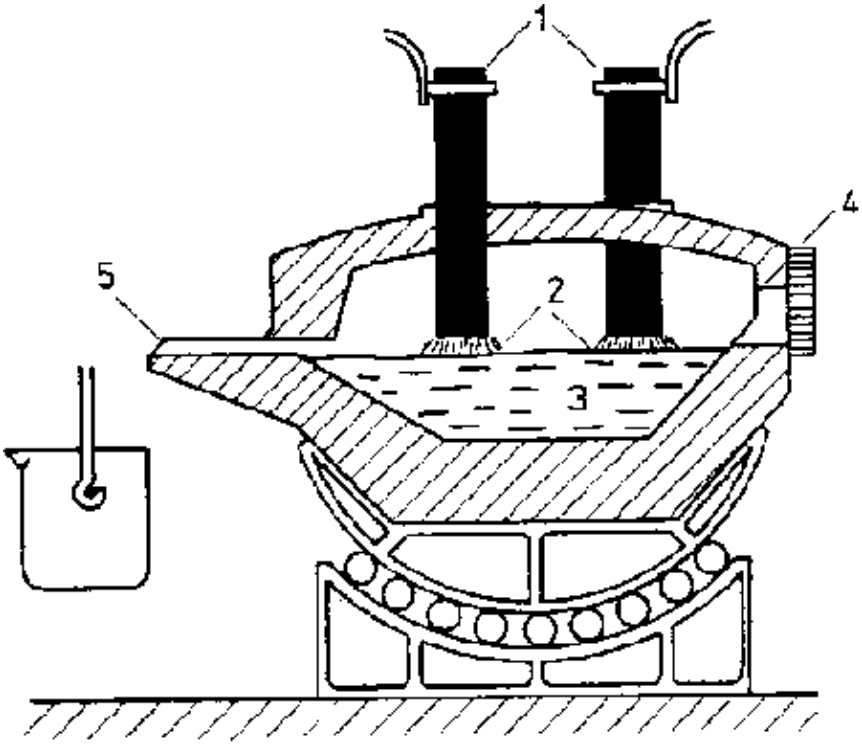

Fig. 3.28 Schematic representation of electric arc furnace.

1 carbon electrodes; 2 arc; 3 steel melt; 4 furnace charging door; 5 casting point

High−quality and classified grades of steel scrap are employed for the production of alloyed steel. If no steel scrap is available the electric arc furnace is then charged with prerefined steel made in the open−hearth furnace. Alloying elements added to the molten steel are nickel, chromium, manganese, molybdenum, vanadium, tungsten and silicon.

High−quality grades of refined steel are produced in the electric arc furnace for use as alloyed steel for parts that are subjected to the very highest of loads and stresses.

Exercises and Questions

1. What are the principal differences between pig iron and steel?

2. Which processes are known as refining?

3. By what does the air−refining process differ from the open−hearth process?

4. Describe the manner of operation of a converter.

5. What are the advantages of the open−hearth method over the air−refining process?

6. Why is it necessary to collect scrap?

7. What kinds of steel are produced in the electric arc furnace?

8. Why can the highest grades of steel be produced only in the electric arc furnace?

3.3.5. Further Processing of Steel

3.3.5.1. Forging

The steel ingots are heated to forging temperature. The actual temperature depends upon the amount of carbon contained in the steel. The hot steel is then processed under a forging hammer or in a forging press (fig. 3.29). Forging is employed to produce heavy parts such as the propelling shafts of ships, crankshafts, turbine blades and piston rods.

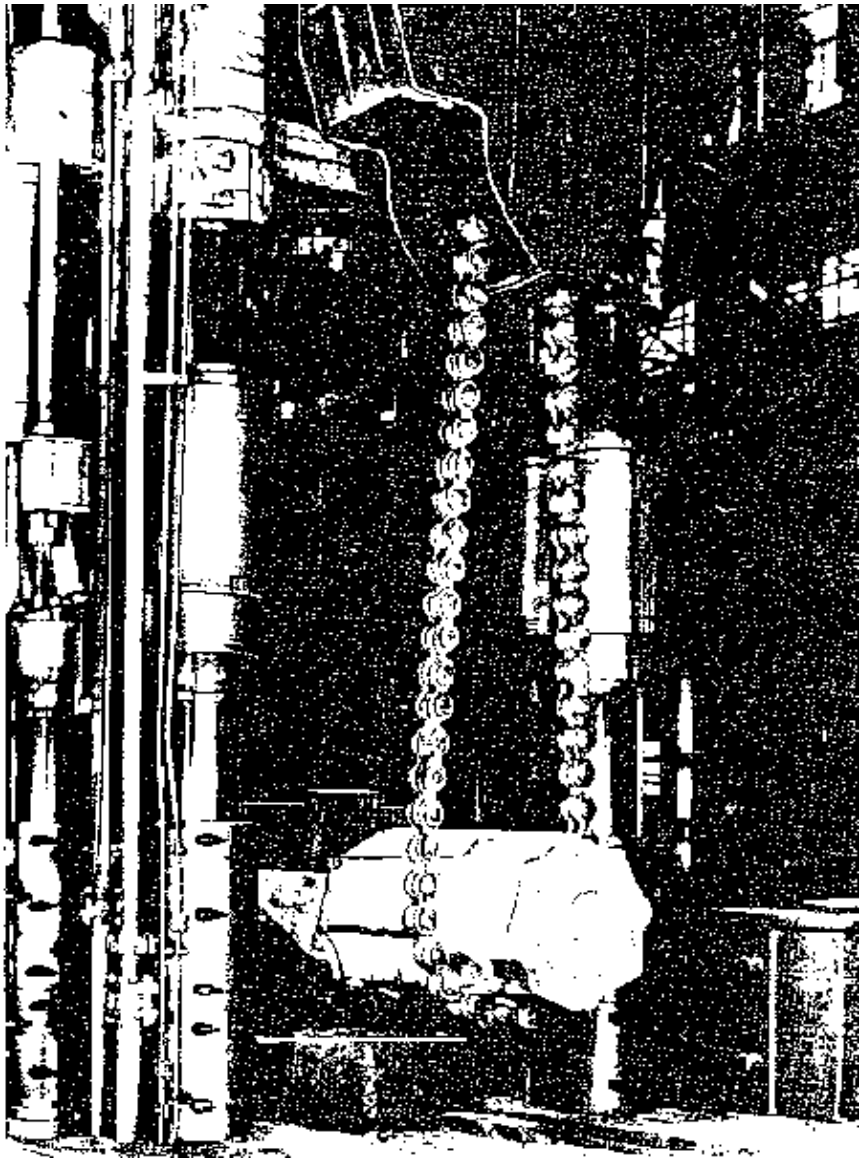

Fig. 3.29a Forging press

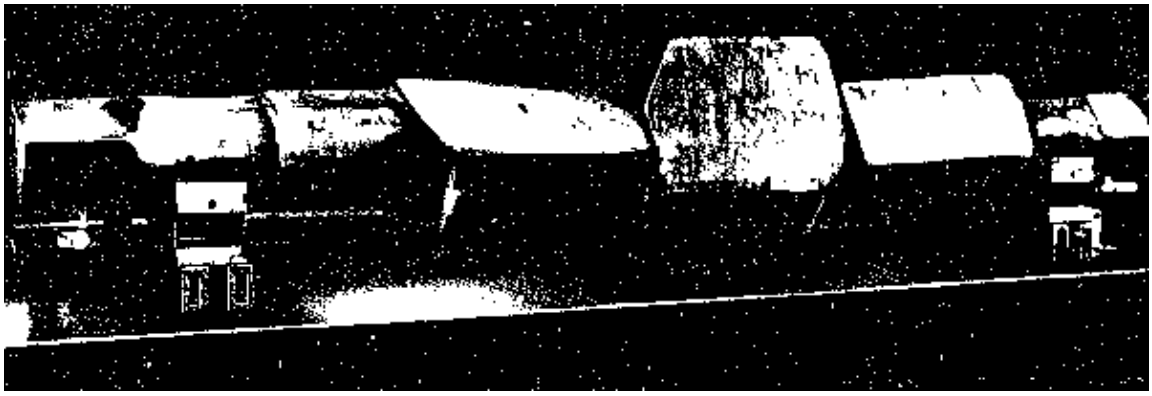

Fig. 3.29b Shaft forged under the forging press

3.3.5.2. Rolling

The glowing−hot steel ingots pass through horizontal rollers (fig. 3.30). The spacing between the rollers is variable. The ingot that is fed to the rolls is gripped by them and pulled through the gap between the top and bottom roll. The cross−section of the ingot is thereby reduced, and at the same time its length is extended. To produce rolled steel structural sections and the like, the rough−rolled ingots are subsequently passed between a series of grooved rolls (fig. 3.31.). The shape of the grooves successively approximates to the final shape of the rolled section. I−sections, rails, beams, plates, strip steel and thick wire or rod are all produced by rolling.

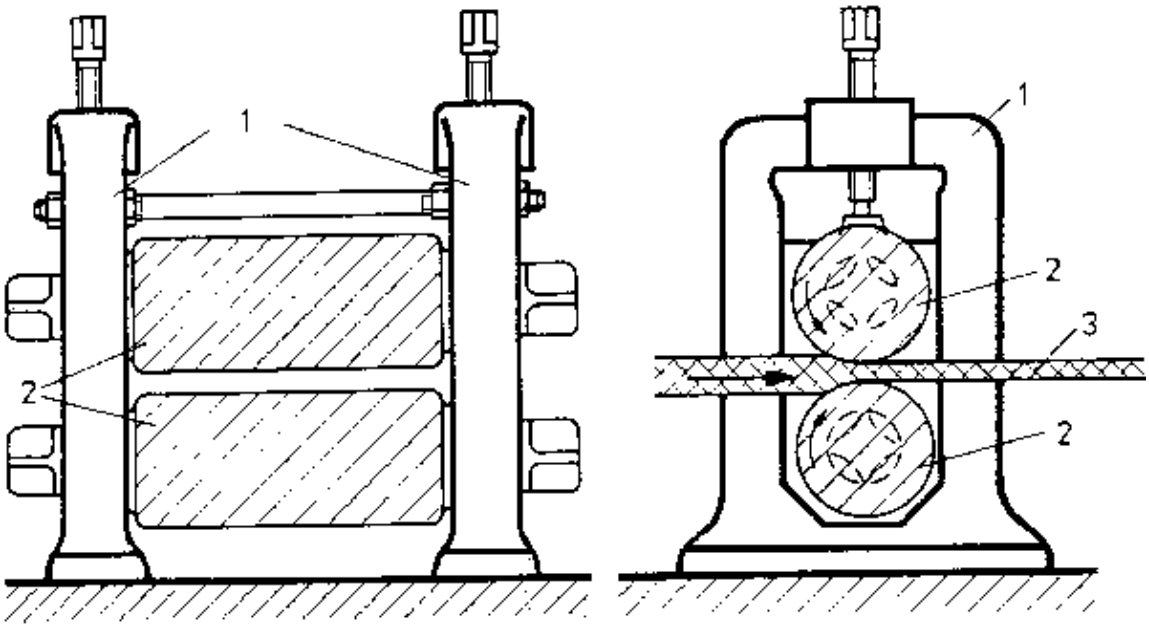

Fig. 3.30. Rolling mill

1 frame; 2 rollers; 3 steel sheet

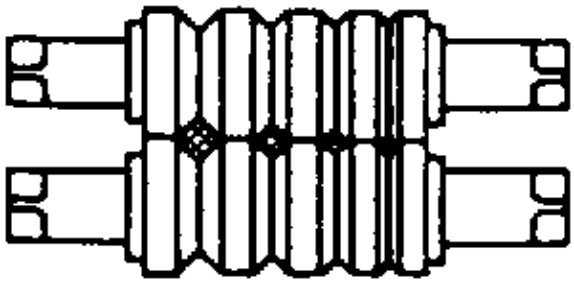

Fig. 3.31. Grooved rollers

Rolling can also be applied for the manufacture of tubular products. Seamless tubular products are manufactured by the Mannesmann (the inventor) piercing process. The resulting seamless tubes are particularly well suited for steam because they can withstand very high pressures.

3.3.5.3. Drawing

The preliminary rolled steel is drawn in a cold condition, converting it into rolled rod stock. The steel is drawn through a draw plate which consists of a hard steel plate with a die in the form of a conical aperture (fig. 3.32). The diameter of the steel rod decreases with each pass, while its length becomes progressively longer.

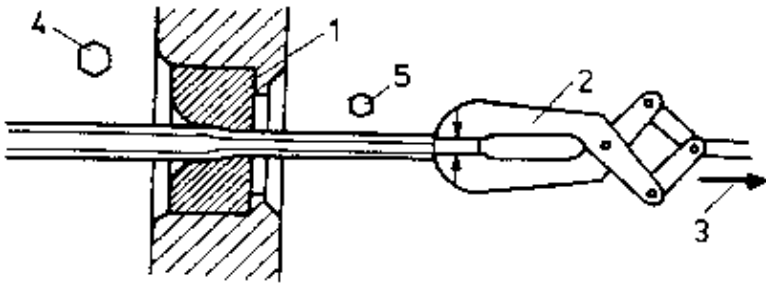

Fig. 3.32. Schematic representation of rod drawing

1 drawing die; 2 rod grippers; 3 drawing force; 4 profile prior to drawing; 5 profile after drawing

The diameter of the die is successively reduced until the rod has been reduced to the desired diameter. Rods of differing cross–section can also be produced by this method (fig. 3.33). The drawn rods have a bright

surface, and the dimensions of the sections are very accurate.

Fig. 3.33

Differing cross–sections can be drawn with immense accuracy

Production of welded tubular products: flat steel strips are drawn through a die and rolled upwards (fig. 3.34). The width of the flat steel corresponds to the circumference of the desired tube.

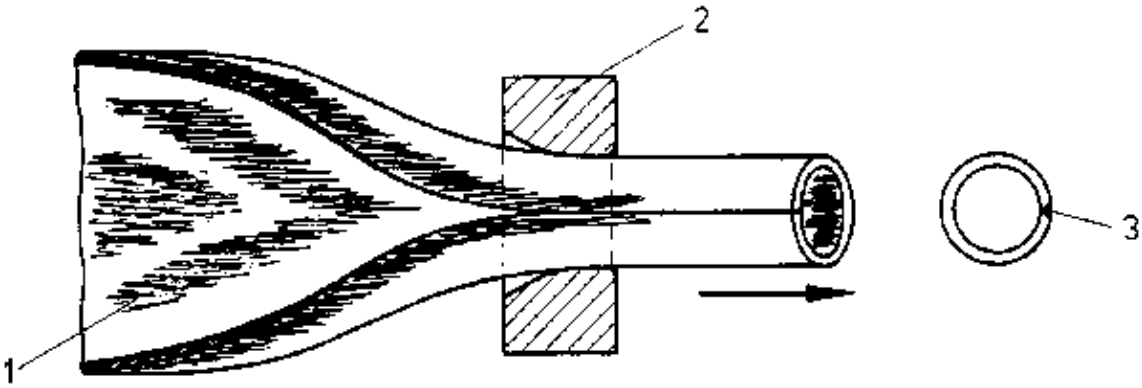

Fig. 3.34. Drawing welded tubular products.

1 sheet; 2 drawing die; 3 welded seam

The longitudinal slot is closed by a welded seam The resulting welded pipes are used for gas and water mains, and for similar applications involving low pressures.

3.3.6. Heat Treatment of Steel

3.3.6.1. New Properties by Changing the Structure

If one tries to file the cutting edge of a tool one will see that the teeth of the file do not grip into the material, they slip over the material. The cutting edge of the tool is harder than the file.

The opposite end of the tool, however, can be filled. The file teeth cut into the material because it is softer than the file. In spite of the fact that the tool is made of the same alloy throughout, the tool exhibits differing properties depending upon whether it is the cutting or clamping end.

The following tests will demonstrate how the properties of steel can be changed.

• Test 3.1.: <u>Harding a piece of tool steel</u>

A piece of plain (unalloyed) steel, as used for the fabrication of a cutting tool, is divided into two approximately equal halves. A notch is filed in the centre of the two steel pieces (fig. 3.35).

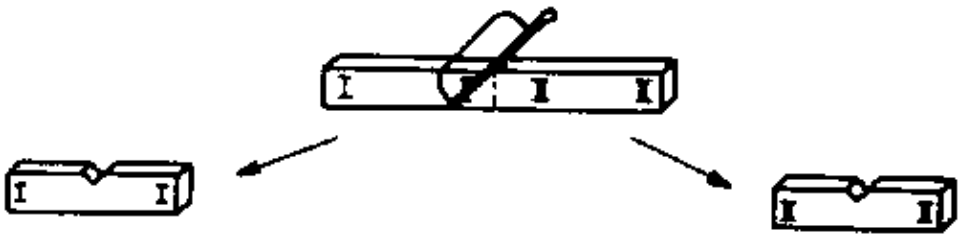

Fig. 3.35. Parts of the steel tool

One piece of steel is identified with 'I' and is heated until it becomes bright red. It is then instantly cooled in cold water (fig. 3.36). The file test reveals that it has become hard (fig. 3.37).

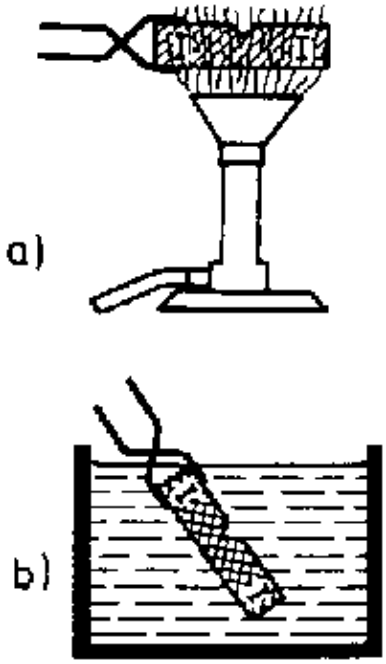

Fig. 3.36.

a) Heating the piece of steel I in a gas flame
b) Quenching the glowing steel in water

Tool steel is hardened by heating it until it becomes bright red and then by rapidly cooling (quenching) it.

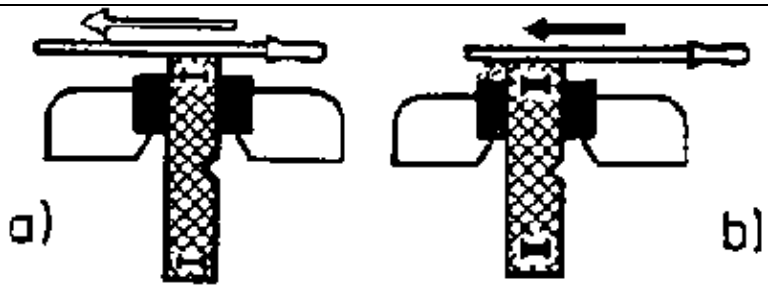

Fig. 3.37.

Hardness testing with a file.
a) The file does not cut; steel I is harder than steel II
b) The file cuts; steel II is softer than the file

• Test 3.2.: <u>Comparison of the surface areas of breakage</u>

The two pieces of steel are clamped in a vice and broken at the notched point by hitting them with a hammer (fig. 3.38).

A comparison of the fracture surfaces indicates that the soft steel has a rough fibrous appearance, as opposed to the fine grain and velvety gloss appearance of the hardened piece of steel (fig. 3.39). Annealing, followed by rapid cooling, the internal structure of the steel.

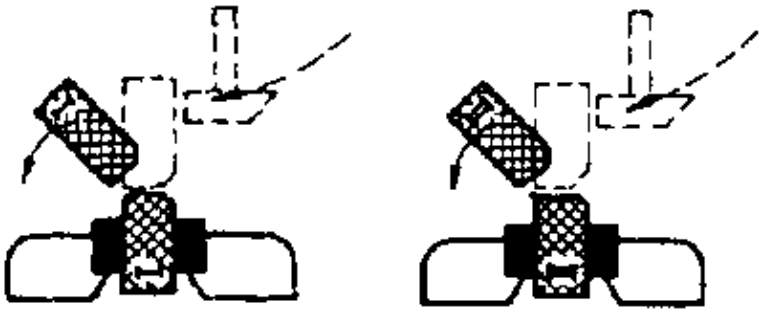

Fig. 3.38.

Pieces of steel are broken by blows with a hammer

Fig. 3.39. Fracture surface

a) Velvety gloss and fine grain of the hardened steel
b) Rough and fibrous grain of the soft steel

The properties of steel are changed if its structure is changed.

• Test 3.3.: Hardness test at a temperature lower than Test 3.1.

The other piece of steel is marked with 'II'. It is heated until it glows in a dark red colour (fig. 3.40), and then instantly cooled (quenched) in water (fig. 3.41). The resulting steel piece can be filed (fig. 3.42).

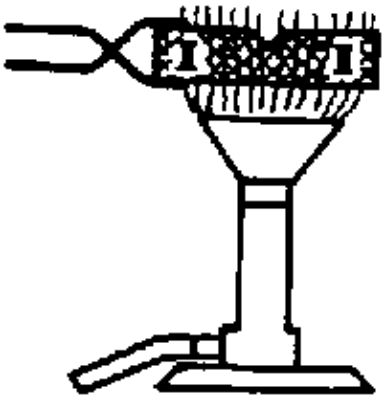

Fig. 3.40.

Steel II is heated until it becomes dark red

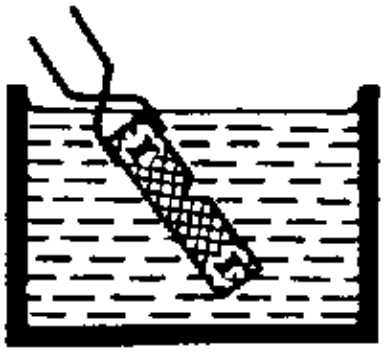

Fig. 3.41.

The dark–red glowing steel is quenched in water

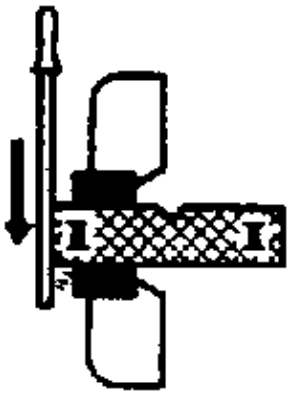

Fig. 3.42.

Steel II can be filed; it has not been hardened

In order to produce a hard steel, as in Test 3.1., it is necessary to heat the steel to a certain temperature.

• Test 3.4.: Hardness test with a steel nail

A steel nail is heated until it becomes bright red and is then cooled in water. Its hardness is now checked with a file. The test will reveal that the nail has not been hardened, as opposed to tool steel. This is because the steel nail contains less carbon than tool steel.

The production of a hard steel structure by glowing (annealing) and quenching depends upon the carbon content of the steel.

The findings of the four previous tests can be summarized as follows:

A piece of steel can be hardened under the following conditions:

- The steel must contain a certain amount of carbon
- The steel must be heated to a certain temperature
- The steel must be rapidly cooled after heating

3.3.6.2. The Carbon Content Determines the Steel Structure

Long and complicated scientific studies on steels of differing carbon content established the relationship between the structure of steel, its defined carbon content, and a defined temperature. Steel with a carbon content of up to 1.7 per cent proved to be the most interesting because these grades of steel are malleable and exhibit many other valuable properties which are exploited on a large scale by industry.

The structure is revealed if one surface of the steel is smoothened by grinding, polished and finally etched with acid. The structure becomes clearly visible under a microscope at magnifications of 200 to 500 times (fig. 3.43.).

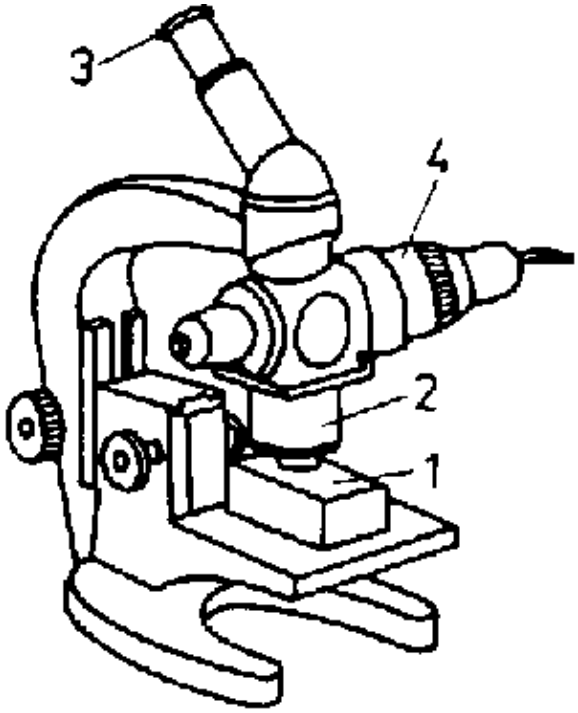

Fig. 3.43. Microscope to inspect the structure of steel.

1 piece of steel; 2 lens; 3 eyepiece; 4 lamp

Steel with a carbon content of 0.9 per cent has a very characteristic structure at a temperature of less than 723°C.

One can distinguish fine and uniform bright and dark strips (fig. 3.44). The light strips are pure iron, the dark strips iron carbide. The latter is a chemical compound consisting of carbon

Fig. 3.44.

Pearlite structure of steel. White strips of pure iron alternate with dark strips of iron carbide and iron. The compound Fe_3C (cementite) indicates that 3 atoms of iron are always bonded with one atom of carbon to form a single molecule of iron carbide.

The structure shown in figure 3.44 has a mother–of–pearl gloss which is why it is also known as pearlite.

Steel containing 0.9 per cent of carbon is composed of pearlite when it is in a cold condition. Pearlite consists of pure iron (called ferrite) and iron carbide in a uniform distribution. Iron and iron carbide take on a fixed quantitative ratio within a pearlite structure.

Fig. 3.45.

Steel containing less than 0.9% carbon.
Dark pearlite in pure white iron

Figure 3.45 shows the structure of steel containing less than 0.9 per cent carbon. Thus, this grade of steel contains more pure iron than is necessary for the fixed quantitative ratio to produce a pearlite structure. This extra pure iron is bedded in the pearlite structure.

The structure of steel containing more than 0.9 per cent of carbon is shown in figure 3.46. The pearlite structure is penetrated by white iron carbide strips. This iron carbide was additionally formed because the carbon content is higher than 0.9 per cent.

Fig. 3.46

Steel containing more than 0.9 % carbon. Dark pearlite penetrated by broad white iron carbide strips

3.3.6.3. Changes in the Structure of Steel upon Heating

If steel of 0.9 per cent carbon content is heated to a temperature of 723°C, the steel still remains a solid body but the iron and carbon atoms of the pearlite structure can move about (migrate) to a limited extent within the structure. This enables the carbon atoms to distribute themselves with utmost uniformity within the iron. The carbon atoms are dissolved in the iron (fig. 3.47). This is a solid solution. (Cake could also be considered as such a solid solution because the sugar it contains has been finely distributed with the utmost uniformity.)

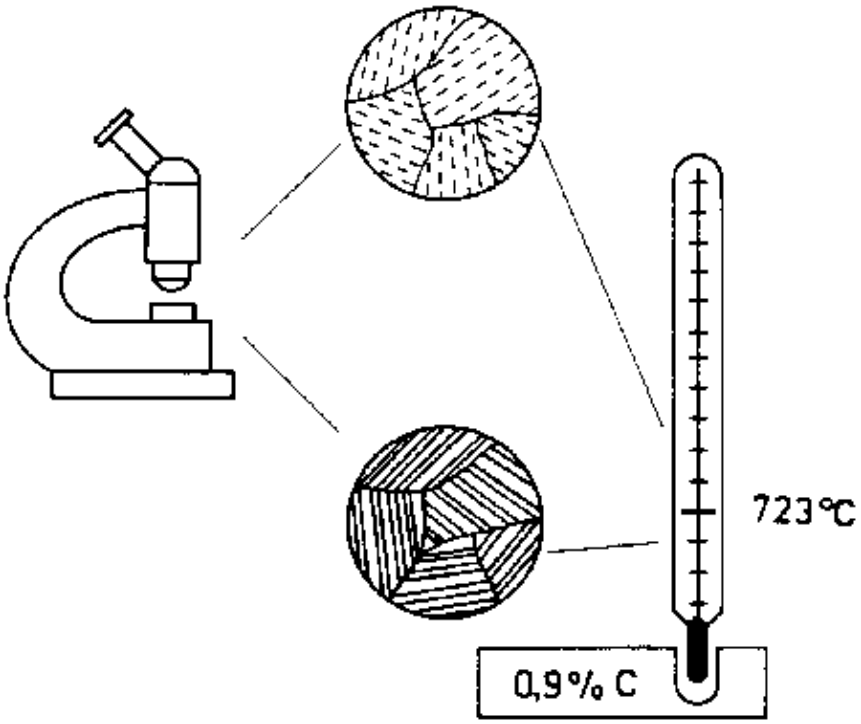

Fig. 3.47

Steel of 0.9% carbon content: its pearlite is transformed into austenite at a temperature of 723°C. A pure austenite structure is obtained only at higher temperatures

This solid solution of iron and carbon is known as 'Austenite'.

This solid solution of iron and carbon was named after the British steel scientist Robert Austen. The Austenite structure remains stable at a temperature of up to about 1450°C. Beyond this temperature steel becomes molten.

Pearlite in the structure of steel containing less than 0.9 per cent carbon is converted into Austenite also at a temperature of 723°C. The pure iron contained in the structure is transformed into the Austenite structure only at a higher temperature. Figure 3.48 illustrates the changes of structure in steel of 0.5 per cent carbon. The pearlite contained in the structure of steel of more than 0.9 per cent carbon is transformed into Austenite at a temperature of 723°C. The iron carbide within the structure, however, is only transformed into the Austenite structure at a higher temperature (fig. 3.49).

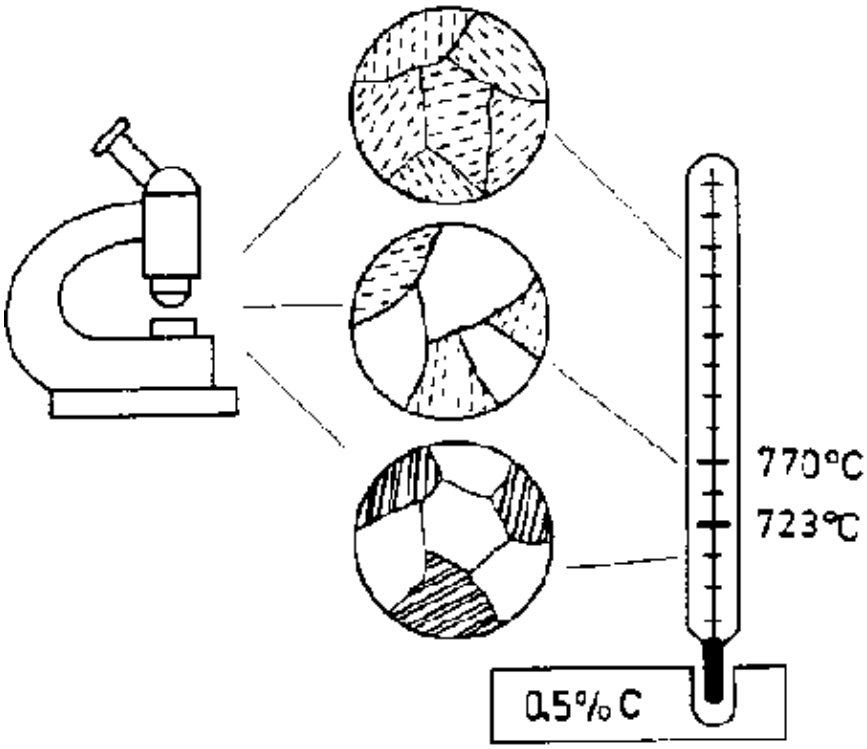

Fig. 3.48.

The more the carbon content in steel is less or higher than 0.9 per cent, the higher the temperature required for complete transformation into Austenite.

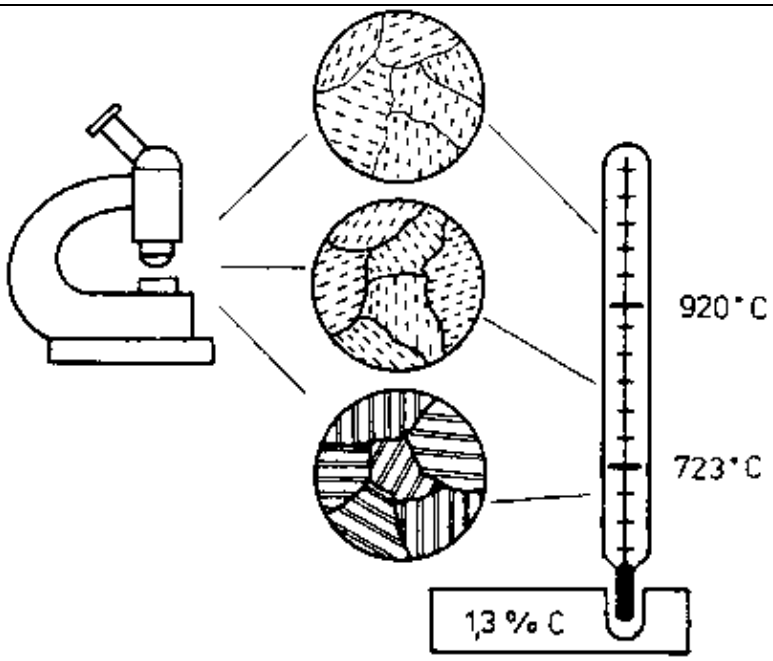

Fig. 3.49

Steel of more than 0.9 % carbon content; its pearlite is transformed into austenite at 723°C. The iron carbide is only transformed into austenite at 920°C.

3.3.6.4. Iron Carbide Diagram

The skilled worker uses a diagram to establish the transformation temperature that is required for the different grades of unalloyed steel. The diagram has a rectangular form (fig. 3.50.). A temperature scale is plotted vertically in an ascending sequence on the left–hand side (the lowest temperature at the bottom of the scale, the highest at the top). The horizontal base scale covers the rising carbon content from left to right. If one wishes to establish with the help of this diagram at which temperature steel of 0.5 % carbon content acquires

a pure Austenite structure one should proceed in the following manner:

1. The point 0.5 % is located on the horizontal base line.

2. A vertical line is drawn through this point and through the red lines within the rectangle.

3. A parallel is drawn from the point of intersection at the upper red line to the base line which cuts through the temperature scale. The point of intersection will define the required temperature: 780 °C.

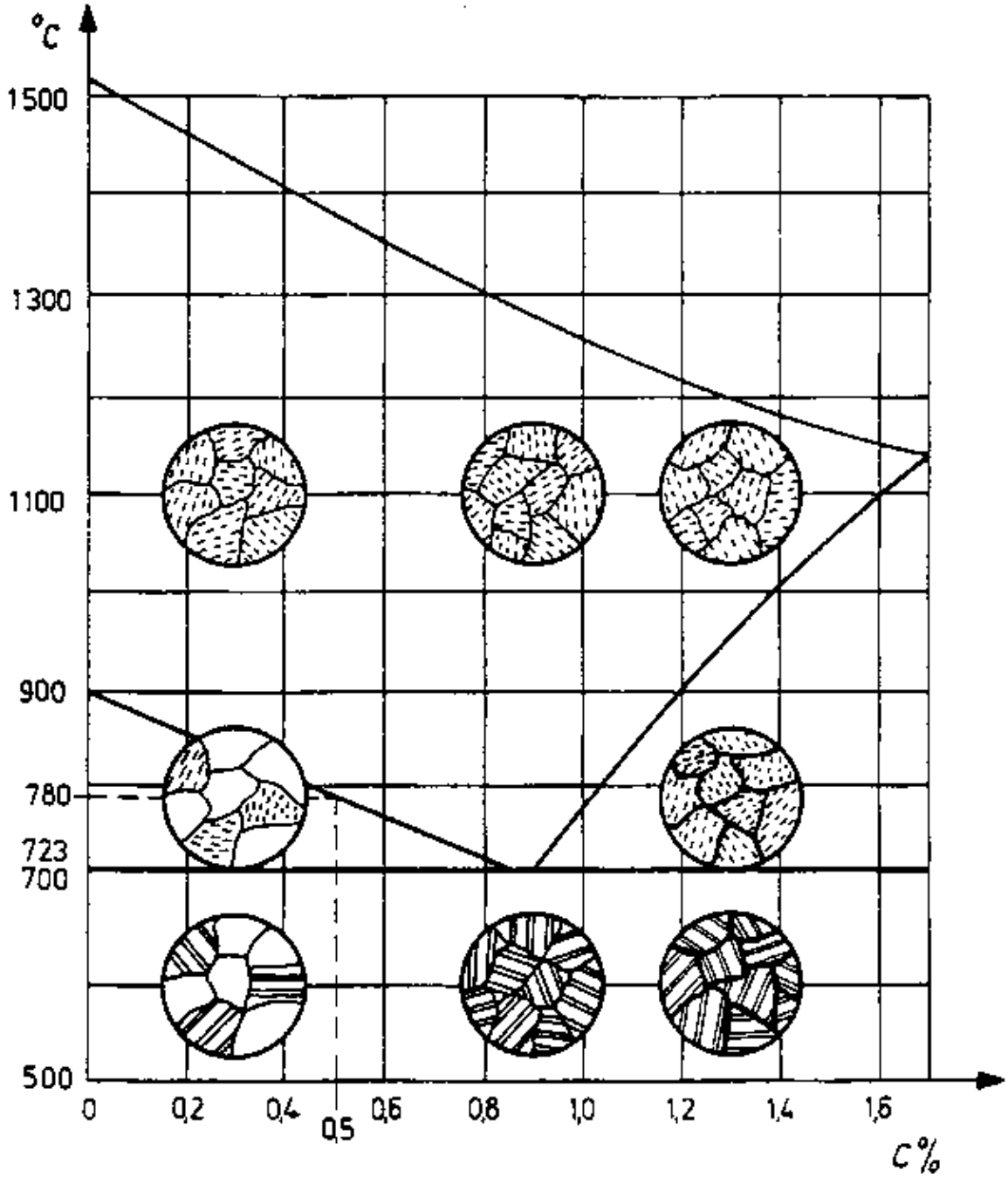

Fig. 3.50. Iron carbide diagram

3.3.6.5. Structure Changes Taking Place in Steel during Gradual Cooling

Steel of a carbon content of 0.9 % has a pure Austenite structure at a temperature exceeding 723 °C. When this temperature of 723 °C is exceeded, the pearlite structure is formed once again when the steel is gradually cooled.

Gradual cooling from a temperature below 723°C of steel having a carbon content exceeding or below 0.9% leads to the formation of a structure that is typical of the grade of steel involved.

3.3.6.6. Structure Changes Taking Place in Steel during Rapid Cooling

Section 3.3.6.1. described how tool steel is hardened. It involved the following operations:

1. Heating the steel until it becomes bright red (equalling about 800°C according to Table 3.5)
2. Rapid cooling (quenching) in water

The tool steel should have a carbon content of 0.5 %. The iron–carbon diagram (fig. 3.50) indicates that this steel has a pure Austenite structure at the specified temperature, i.e. the carbon is finely and uniformly distributed throughout the iron.

Table 3.5. Annealing colours

Annealing colour	Temperature in °C
Dark red	650
Red	750
Light red	800
Yellow	1000
White	1300

Rapid cooling does not give the carbon and iron atoms sufficient time to take on the places within the structure that would correspond to a pearlite structure. The place allocated to an iron atom is now taken up also by a carbon atom. The inevitable wedging caused by such a distribution leads to tensions within the structure. These tensions become outwardly apparent as hardness. The structure arising during hardening (fig. 3.51.) has been named 'Martensite' after the person who discovered it – Martens.

Martensite is formed from Austenite when it is cooled very rapidly from the hardening temperature.

The annealed and quenched nail produced in Test 4 is made of steel of a carbon content of only 0.2 per cent. Consequently, very little Martensite is formed during rapid cooling which could become noticeable as hardness.

Fig. 3.51

250 × enlargement of martensite structure

Only unalloyed steels that contain more than 0.3 per cent carbon can be hardened.

3.3.6.7. Technology of Hardening

Heating of workpiece

Small workpieces such as centre punches, solid punches and scribers, can be heated in the flame of a Bunsen burner.

Larger workpieces will have to be heated in a forge fire. If possible, charcoal should be used as fuel because (except for carbon) it does not contain any elements that could have a detrimental effect on the steel.

The following points must be observed if hard coal is employed. Hard coal contains sulphur and phosphorous. These elements penetrate into the surface of steel where they are counter–productive to the formation of Martensite. The workpiece will have soft points in the surface after hardening.

Workpieces should only be heated with hard coal that has been completely burnt, i.e. the hard coal should only glow. No flames must be visible. Under such conditions all phosphorous and sulphur will have been burnt.

The workpiece is placed in the glowing embers, and the supply of air is stopped so that the surface of the workpiece will not oxidize (burn into scale). The glowing fire is started and maintained from above with a fan. A more favourable situation is obtained in a muffle furnace. This is a furnace in which heating is indirect and in which the charge is contained in a refractory container in the form of a pipe that is closed at one end. This container protects the charge so that it cannot come into contact with the products of combustion (fig. 3.52).

Sensitive instruments, such as snap gauges and plug gauges, as well as tools as form cutters and taps, are best heated in molten salt (fig. 3.53) because the hardening temperature can be maintained with great accuracy.

It is important to ensure that the workpiece that is to be hardened is heated to the correct hardening temperature. Knowledge of the carbon content will be sufficient for unalloyed steel. The diagram (fig. 3.54) indicates the correct hardening temperature for a given carbon content. The broad shaded line indicates the temperature latitude.

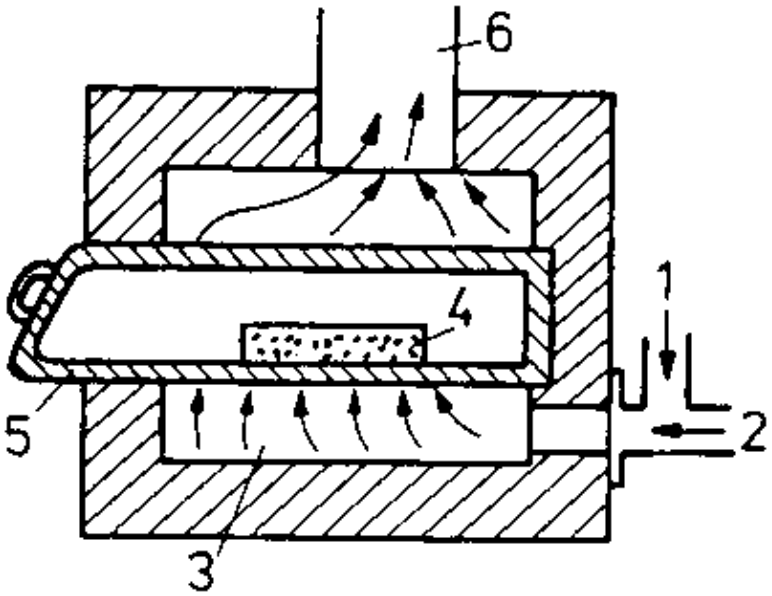

Fig. 3.52. Muffle furnace

1 air feed;
2 gas feed;
3 combustion space;
4 workpiece;
5 muffle;

6 exhaust for combustion gases

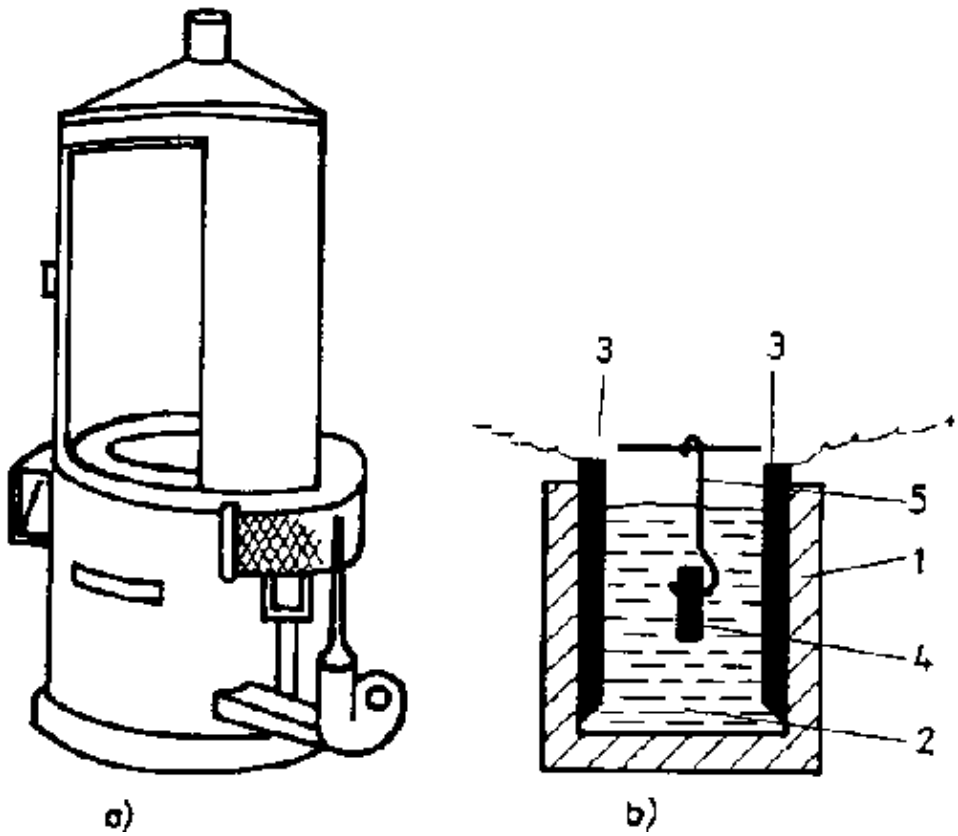

Fig. 3.53.

a) Molten salt bath furnace
b) Principle of the molten salt bath furnace
1 ceramic vessel; 2 molten salt bath; 3 carbon electrodes; 4 workpiece; 5 suspension

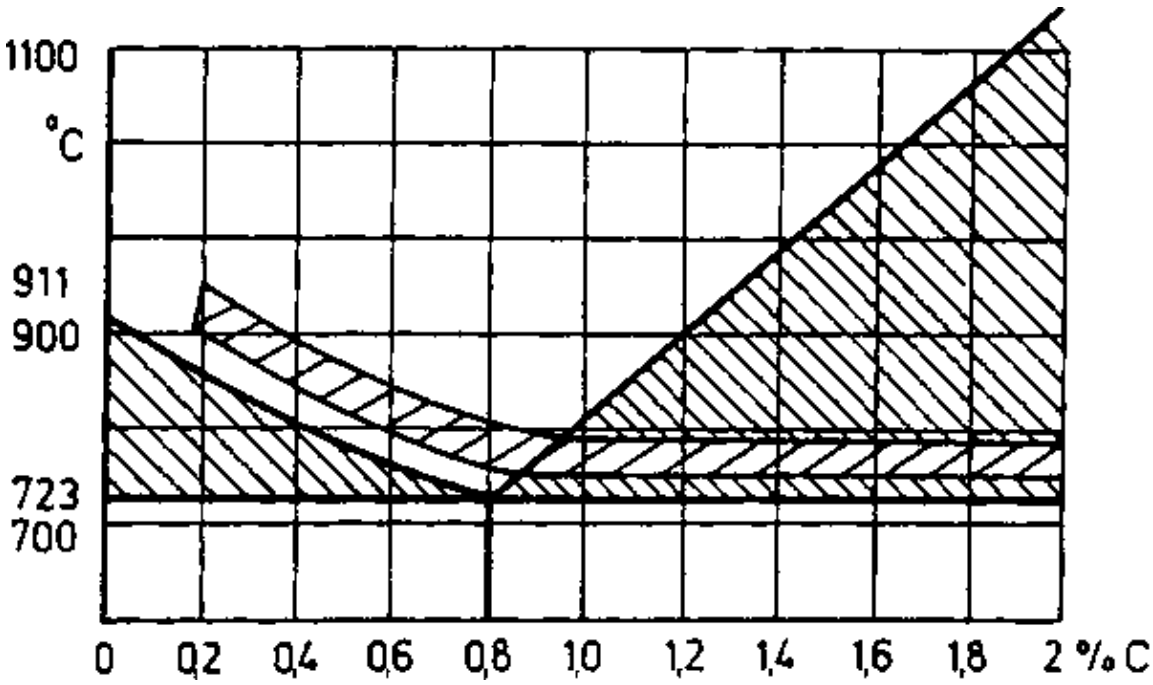

Fig. 3.54. Diagram to establish hardening temperature

A steel of 1 per cent requires a temperature between 740 and 780 °C for hardening.

The hardening temperature can be assessed from the glowing colours (table 3.5). The workplace must be darkened for proper assessment of the glowing colour. The temperature is usually estimated too low in daylight.

The diagram (fig. 3.54) indicates that no pure Austenite structure is obtained at the specified hardening temperature with steel containing more than 0.9 per cent carbon. This is because the iron carboide is not yet dissolved at this temperature. The need to dissolve the iron carbide has been dispensed with because iron carbide is already very hard.

The diagram is invalid for alloyed steels. In such instances heating has to be conducted according to the specifications of the steel makers.

Workpiece Quenching

The correct choice of quenching agent is important for impeccable hardening.

Only unalloyed and low–alloy steels may be quenched in water.

The workpiece has to be moved in the quenching bath to prevent the formation of a steam layer at the surface of the workpiece which would act like a jacket and prevent rapid dissipation of heat.

The direction in which the workpiece is immersed in the quenching bath is also of significance. Examples of correct and incorrect workpiece immersion are shown in figure 3.55. Incorrect immersion can given rise to tensions in the work–piece which can cause distortions or even cracking.

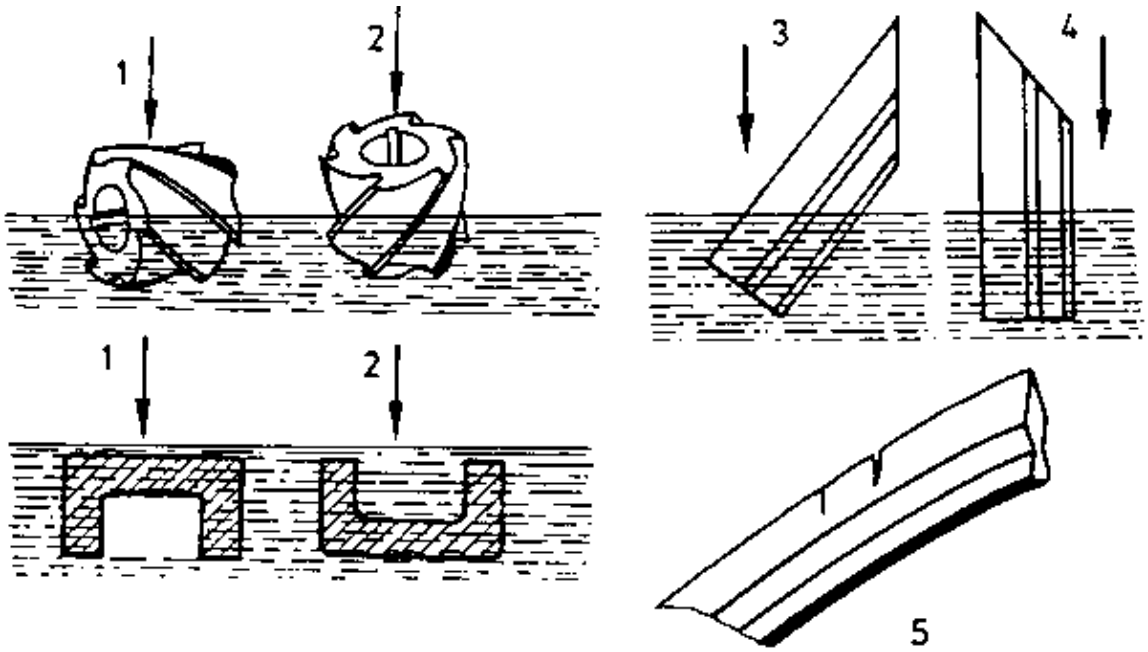

Fig. 3.55.

Correct and incorrect immersion of the parts that are to be hardened in water for quenching.
1 correct immersion; 2 incorrect immersion; 3 ruler is immersed with the thick edge foremost;
4 incorrectly immersed ruler; 5 incorrect immersion produces an inhomogeneously quenched and distorted ruler

Sheet metal parts up to a thickness of about 2.5 mm usually become distorted if they are quenched in water. Consequently, they should be cooled between plane cold steel plates (fig. 3.56).

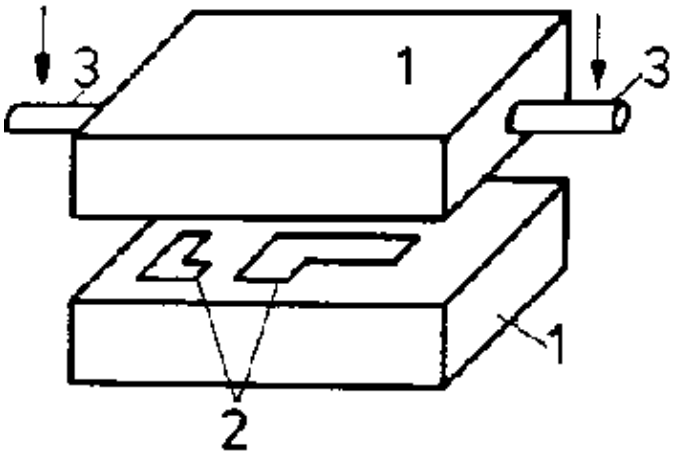

Fig. 3.56. Cooling thin parts between cold steel plates.

1 steel plates;
2 glowing sheet parts;
3 handles

Since cooling inside the workpiece proceeds at a slower rate than outside, larger workpieces are not hardened right through. They retain a soft and tough core. This is advantageous if the work–pieces are later subjected to shock loads.

Full through hardening can be improved by alloying additives, e.g. silicon (Si), manganese (Mn), tungsten (W), nickel (Ni), vanadium (V), chromium (Cr) and molybdenum (Mo).

Tools made of alloyed steel are quenched by immersing them in oil. Such grades of steel achieve adequate hardness values also with slow cooling so that they cannot become distorted or cracked.

There are some grade of high–alloy tool steel that harden in the air which is why they are referred to as air hardening.

Surface Hardening

General Remarks: Surface hardening is adopted when the workpiece has to have a hard, wear–resistant surface while the core has to remain tough so that the workpiece is resistant to knocks and bends, e.g. gearwheels, crankshafts, pinions and connecting rods.

Flame Hardening: Unalloyed steel of 0.3 to 0.6 per cent carbon content is surface heated by a gas flame and then quenched with a spray of water (Fig. 3.57). The thickness of surface hardening depends upon the amount of heat to which the surface is exposed. This is adjusted by the feed rate of the torch and the water spray. The slower the advance rate of the torch, the greater the depth of hardness.

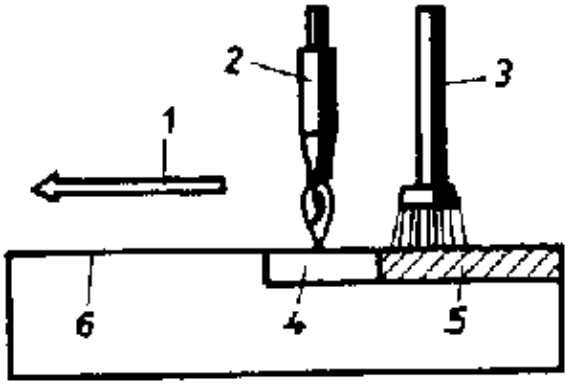

Fig. 3.57. Flame hardening

1 feeding device of the burner and spray;
2 burner; 3 spray;
4 glowing material;
5 hardened material;

6 unhardened material

Case Hardening: Workpieces containing a low amount of carbon cannot be hardened without special treatment (see Section 3.3.6.1.). The surface can only be hardened after it has absorbed carbon. For this purpose the workpiece is bedded in a carbon–bearing powder (charcoal, charred leather, potassium carbonate) where it is annealed at a temperature of 800 to 900°C for periods between two and eight hours under the exclusion of air (Fig. 3.58). The carbon is absorbed at the surface, thereby carbonizing the steel. The depth of carbon absorption increases with the temperature and duration of annealing. After carburization the glowing workpiece is taken out of the carbon powder and is immediately quenched in water.

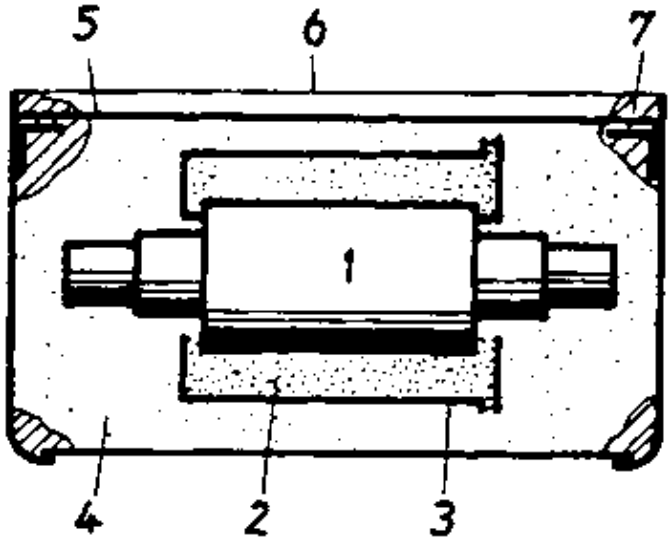

Fig. 3.58. Roller packed for carburization for case hardening

1 roller made of steel of low carbon content; 2 carbon–bearing hardening agent; 3 sheet mould; 4 sand; 5 cover; 6 iron box; 7 loam

Carbonization can also be conducted in a salt bath consisting of barium carbonate ($BaCO_3$).

Nitriding: Steel containing low quantities of chromium and aluminium are heated to 500°C and exposed to a stream of ammonia gas. The nitrogen penetrates the surface where it forms a thin layer of very hard nitrides. The workpiece is not quenched. The resulting nitride surface is harder than that of case hardening.

3.3.6.8. Tempering

Steel, e.g. a cutting tool, is as hard as glass after annealing and quenching, but it is brittle. A glass–hard tool is unsuitable for cutting work because pieces of steel will break out of the cutting edge when it is used (fig. 3.59). To prevent this the tool is heated to a temperature of 270°C after quenching. This diminishes the hardness, but increases its thoughness. The cutting tool still has the hardness it requires to cut into the material for machining.

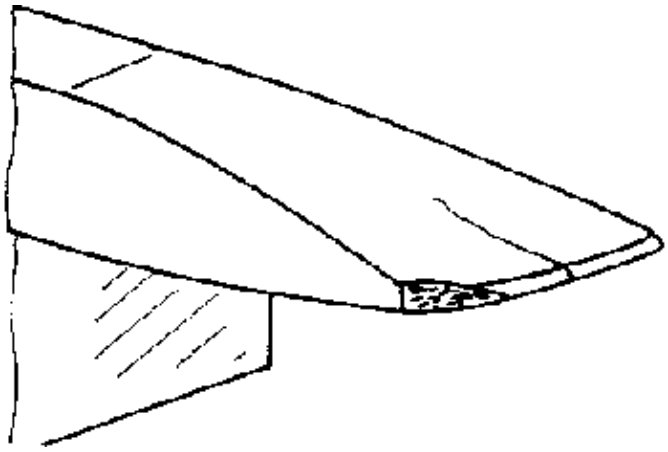
Fig. 3.59.

Broken cutting tool; the tool was insufficiently tempered

Renewed heating of steel after hardening is known as tempering. The steel becomes tougher and is given its working hardness.

The tempering temperature depends upon the type of tool and its uses (table 3.6).

The higher the tempering temperature, the softer and tougher the steel. The temperature of bright workpieces that have been polished with emery can be recognized from the tempering colours resulting from the bond between iron and the oxygen contained in the atmosphere.

Table 3.6. Tempering temperatures and colours for tools

Tool (example)	Tempering temperature °C	Tempering colour
	220	light yellow
	240	dark yellow
	250	yellowish–brown
	260	brownish–red
	270	purple–red
	290	violet
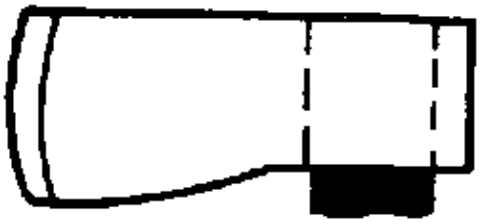	300	corn blue
	310	light blue
	320	greyish–blue

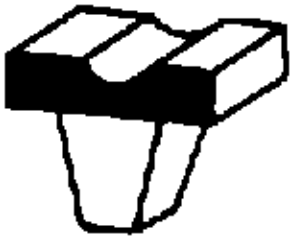	330	grey

Internal tempering: Only part of the workpiece is quenched (e.g. only the tip of a cutting tool). The remaining heat in the other part of the work–piece is exploited for tempering (figs. 3.60a to d). Since the heat is conducted from the interior outwards, the workpiece takes on a hard surface and a tough core.

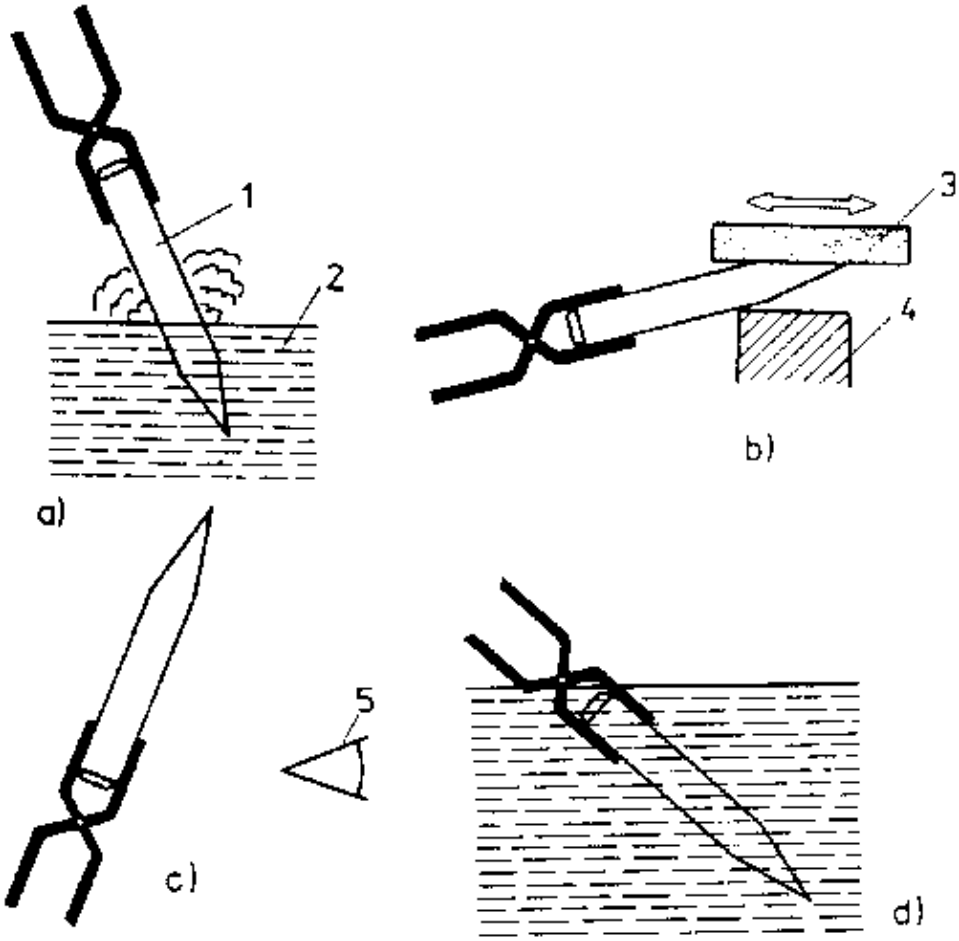

Fig. 3.60 Internal tempering

a) Only the tip of the cutting tool is hardened when it is quenched in water

b) The tip is quickly polished bright with emergy

c) The tip of the cutting tool is held upwards; the heat of the shaft is transmitted upwards to the tip. The change of colour is observed

d) When it takes on a purple red colour the entire tool is quenched in water

1 cutting tool; 2 water; 3 emergy; 4 anvil; 5 eye

External tempering: After bright polishing, the hardened workpiece is heated externally by an alternative source of heat. The sources of heat can be a gas flame, heated steel plates, sand or salt baths and tempering furnaces (figs. 3.61 and 3.62).

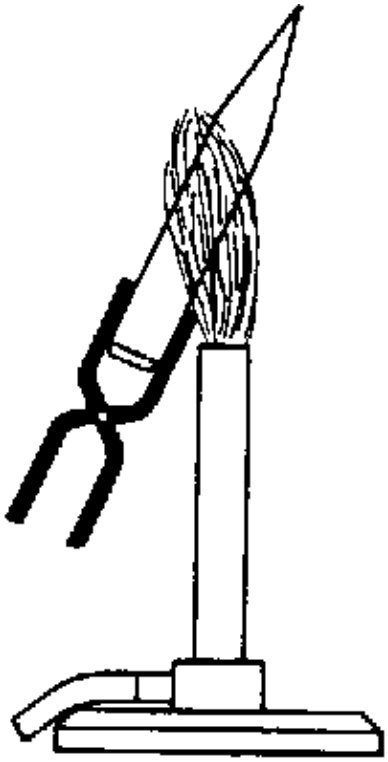

Fig. 3.61. External tempering with a gas flame

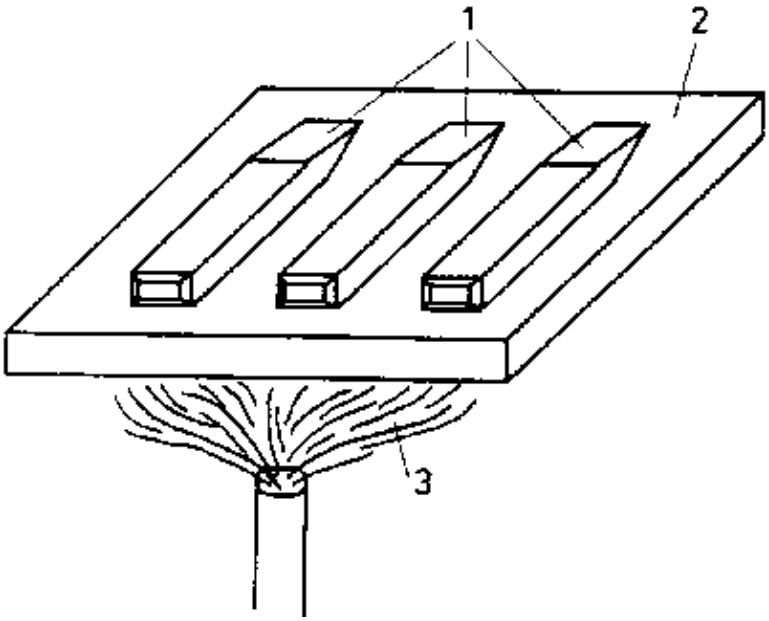

Fig. 3.62. Tempering several cutting tools on a hot steel plate

1 cutting tool; 2 steel plate; 3 gas flame

3.3.6.9. Refining by Heat Treatment

The toughness of unalloyed steel with a carbon content of 0.2 to 0.6 per cent can be considerably increased by refining, securing the same or even a higher strength than its original state.

For this purpose the steel is hardened and then tempered at a temperature between 450 and 700°C.

The iron carbide is uniformly distributed as a fine grain in the structure. The resulting finer structure is the reason for the improved properties.

Refining involves hardening and tempering at higher temperatures.

Normal Annealing

Parts made of cast steel usually have a coarse–grain structure on account of gradual cooling in the mould. Welded seams also have a coarse–grain structure. Such a coarse–grain structure has little strength and toughness.

In order to obtain a fine structure the steel is heated to a temperature beyond the GSE line in the diagram (fig. 3.50.), depending upon its carbon content. It is then allowed to cool in the air. A fine structure consisting of streaks of pearlite is formed.

Soft Annealing

Steel of a carbon content exceeding 0.5 per cent has a hard structure resulting from the iron carbide inclusions (fig. 3.46), making it unsuitable for machining or cold shaping (e.g. drawing).

In order to diminish this hard structure the steel is annealed for 3 to 4 hours at 680 to 720°C and is then slowly cooled (e.g. in the furnace). The iron carbide balls together. The iron carbide streaks that previously made machining difficult are now interrupted (fig. 3.63).

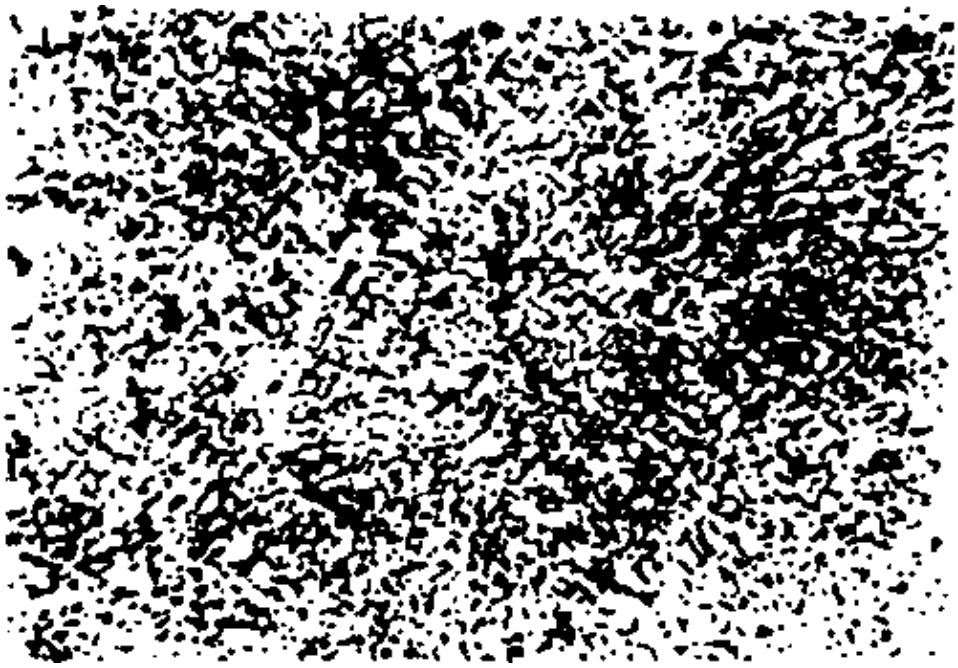

Fig. 3.63. The coherent iron carbon veins are interrupted

Exercises and Questions

1. Which operations are required to harden a workpiece made of unalloyed steel?

2. Which preconditions have to be fulfilled so that a piece of steel is hardened by annealing and rapid cooling?

3. Describe the structure of steel of 0.9 per cent carbon content.

4. What is Austenite?

5. Establish with the help of the diagram (fig. 3.50) at which temperature steel with a carbon content of 0.3 per cent takes on a perfect Austenite structure.

6. Under which conditions is an Austenite structure transformed into a Martensite structure?

7. Why is steel with a carbon content of 0.2 per cent that was annealed until it became bright red not hard after it has been quenched in water?

8. Why is charcoal better suited for a forge fire than hard coal?

9. Which points have to be observed when a work−piece is heated in a hard−coal fire?

10. What are the advantages of heating a workpiece in a muffle furnace over a forge fire?

11. Steel of a carbon content of 1.2 per cent is to be hardened. To which temperature must it be heated? Use the diagram (fig. 3.54) for this purpose.

12. Which types of steel should be quenched only in water for hardening?

13. Which types of steel are quenched in oil?

14. Why is surface hardening of gearwheels and crankshafts more appropriate than through hardening?

15. The surface of a workpiece is to be hardened. It consists of steel with a carbon content of 0.1 per cent. Which measures have to be taken to achieve this aim?

16. Why is a cutting tool tempered after hardening?

17. How can the tempering temperature be established?

18. How is a cutting tool internally tempered?

19. How is a centre punch externally tempered?

20. List the operations that are required to refine steel.

21. Workpieces made of cast steel have a coarse structure. Consequently, their strength and toughness is low. Which measures are necessary to overcome these disadvantages?

22. Steel pieces of a carbon content of 0.8 per cent are heated for a period of three hours at a temperature of about 700°C and then allowed to cool very gradually. Which advantages does this procedure bring?

3.3.7. Classification, Properties and Uses of Steel

3.3.7.1. Classification

Steel is classified by its composition into unalloyed, low−alloy and high−alloy steel.

Unalloyed steel has a low carbon content and only very small quantities of alloying elements on account of the steel manufacturing method. The carbon content ranges between 0.05 and 1.7 per cent. The contents of admixture elements are 0.35 per cent silicon, 0.8 per cent manganese, 0.07 per cent phosphorous and 0.06 per cent sulphur.

Alloyed steel contains, next to carbon, extra alloying elements such as silicon, manganese, chromium, nickel or molybdenum. These admixtures change the properties of the steel in many ways, but particularly by increasing its strength.

Low−alloy steel contains, next to carbon, only 5 per cent alloying elements.

High−alloy steel contains, next to carbon, more than 5 per cent alloying elements.

Unalloyed, low−alloy and high−alloy steel is classified into structural and tool steel in conformity with its intended use.

Structural steel is employed for the fabrication of machine parts, bodywork, vessels and tanks.

Tool steel is used for the fabrication of tools.

3.3.7.2. Properties and Uses of Unalloyed Steel

The properties of unalloyed steel are primarily determined by its carbon content. That is why it is referred to as carbon steel.

Hardness and strength increase with rising carbon content, while toughness and ductility decrease.

Heat treatment: Unalloyed steel containing more than 0.35 per cent carbon can be hardened. The higher the carbon content of the steel, the more cementite can be formed and consequently the harder the steel in its original state when it is supplied.

Unalloyed steel is quenched in water.

Unalloyed steel is fully through hardened only in low cross–sections (up to about 4 mm) because the required quenching rate has to be very fast.

Case–hardening steel has a carbon content of less than 0.2 per cent. Such steel can be carburized at the surface after shaping and can then be hardened. Case–hardening steel is a high–quality grade of steel containing very little sulphur and phosphorous. It is melted with utmost care in the open–hearth furnace.

Behaviour during metalworking: Unalloyed steel is well suited for casting (see Steel Casting, Section 3.3.5.). It is very tough up to a carbon content of about 0.2 per cent, can be easily formed (forging, pressing, rolling) and cold formed (rolling, drawing). It is also readily weldable.

Unalloyed steel of a carbon content exceeding 0.3 per cent is stronger and harder, but also more brittle. Such steel is difficult to cold–form and weld.

Behaviour during cutting: The lower the carbon content of steel, the higher its content of pure soft iron in the steel structure, and the better its cuttability.

Steel containing less than 0.9 per cent carbon can be easily machined with cutting tools.

Steels with a carbon content exceeding 0.9 per cent offers a greater resistance to cutting because the hard iron carbide is present in large grains in the steel structure also in an unhardened condition (see Section 3.3.6.10). This cutting resistance can be diminished by soft annealing.

Use as structural steel: Unalloyed steel containing less than 0.35 per cent carbon is primarily employed in machine building and steel construction. It is also used for the fabrication of railway superstructures, wires, strips and drawn sheets.

Use as tool steel: Unalloyed steel of a carbon content exceeding 0.35 per cent is used as tool steel because it can be hardened. Unalloyed tool steel is mainly employed for woodworking tools (axes, hatchets, saws, etc.), as well as for hammers, chisels, measuring tools and for surgical instruments.

Nowadays, unalloyed steel is no longer used for cutting tools (turning and planing tools, drills, milling cutters, etc.) because it loses its hardness already at a temperature of 200°C.

3.3.7.3. Properties and Uses of Alloyed Steel

The addition of alloying elements offers a great diversity of possibilities to modify the properties of steel. This applies particularly to the strength of the steel which is considerably increased as a result of alloying admixtures. This means that the dimensions of parts can be reduced yet withstand the same loads, and that machines become lighter.

Heat treatment: General rules for heat treatment of alloyed steel cannot be given. The instructions on heat treatment supplied by the steel mills should be precisely observed. Generally speaking alloyed steel is more easily hardened than the unalloyed counterpart.

Behaviour during metalworking: It is more difficult to forge alloyed steel than unalloyed steel. The instructions of the steel mills regarding forging operations (level of the forging temperature) must be closely observed to ensure that the guaranteed properties of the steel are secured.

Stainless and heat−resistant steel: Additions of 15 to 20 per cent chromium, 1 to 1.5 per cent Silicon and 0.9 to 9 per cent aluminium, form oxide coats on the surface of the steel which remain dense and impermeable also when heated.

Spring steel: Additions of 0.5 to 0.9 per cent of manganese and 1.4 to 2 per cent of silicon increase the elasticity of the steel.

Valve steel: Heat and wear resistance are the properties expected of valves. These are achieved by adding 2 to 4 per cent silicon, and 2 to 10 per cent chromium, to the steel.

Steel for anti−friction bearings: The high resistance to wear required for this purpose is secured by the addition of 0.5 to 2 per cent chromium.

Alloyed tool steel: Depending upon the intended area of application, tool steel is classified into cold, hot and high−speed cutting steel.

Cold and hot cutting steel contains additions of manganese, chromium, vanadium, molybdenum and tungsten.

Cold cutting steel is used for the manufacture of tools that are not exposed to high temperatures during their use, e.g. clamping tools, measuring tools, compressed−air tools and certain types of cutting tools such as shears, knives, milling cutters, files, etc.

Hot cutting steel is used for tools that become very hot during machining operations, e.g. forging dies, hot compression tools, knives for hot shears, long−life moulds for hot shears, long−life moulds for light−metal casting, etc.

High−speed cutting steel: It is used for the manufacture of cutting tools of very high cutting capacities. Depending upon the type of steel, the temperature prevailing at the cutting edge can amount to between 500 and 600°C without diminishing its hardness. High−speed cutting steel contains up to 20 per cent tungsten, up to 10 per cent chromium, up to 5 per cent molybdenum and up to 4 per cent vanadium. High−speed cutting steel is very expensive on account of the rare and costly alloying metals it contains. That is why only bits are made for the cutting part, and these are soldered on to the bit holder made of a high−grade structural steel or they are inserted in the holder (fig. 3.64).

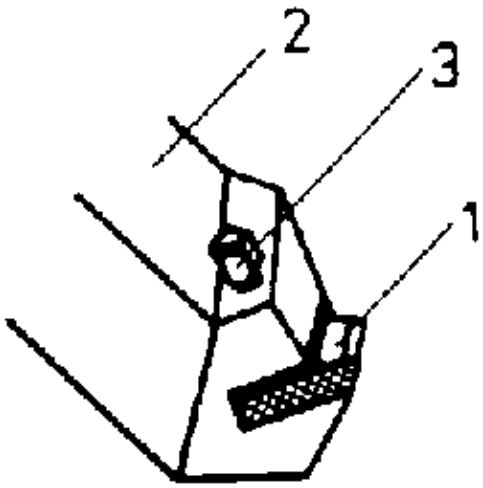

Fig. 3.64. Turning tool

1 bit made of high−speed steel; 2 tool holder; 3 screw

3.3.7.4. Steel Castings

The steel that is melted in steel mills is suitable for casting in moulds. The resulting steel casting is strong and tough. The high casting temperature (melting point 1500°C) requires moulds made of materials that are difficult to melt.

Casting tensions can be prevented by subjecting the cast workpieces to an annealing process for about two hours. The design of cast workpieces should aim at smooth transitions and uniform wall thicknesses. Steel castings are weldable.

Uses: Steel castings are employed whenever the mechanical properties of grey casting are inadequate to withstand expected impacts and knocks Parts preferentially made of cast steel are the frames of forging presses, pump casings for high operating pressures, valves, turbine casings, turbine impellers, and various items of equipment for the chemical industry.

3.3.8. Cast Iron

3.3.8.1. Production

Cast iron is produced by remelting pig iron. Its chemical composition is only negligibly changed by this process, but the structure of the casting becomes denser with greater uniformity and a finer grain.

The most important melting furnace employed for this purpose is the foundry shaft furnace (fig. 3.65). It consists of a circular shaft of 0.5 to 2 m diameter and a height between 3 and 9 m, and it is lined with refractory bricks.

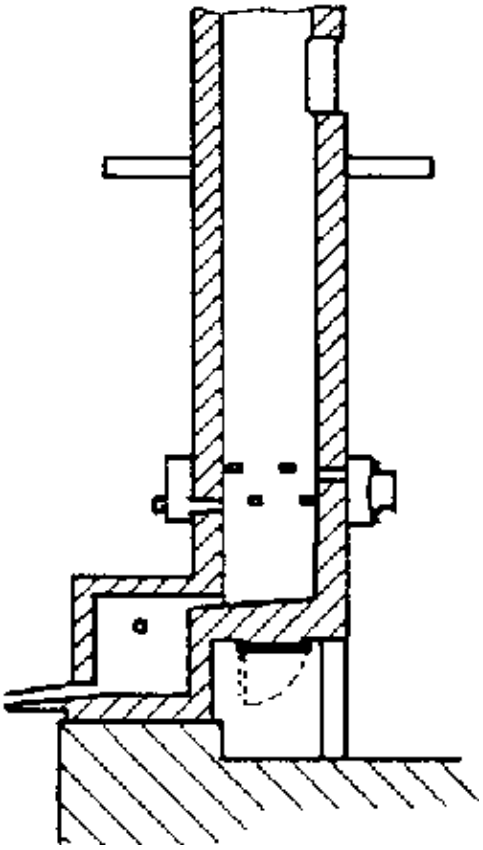

Fig. 3.65. Foundry shaft furnace

A coke fire is ignited at the bottom of the shaft upon which alternating layers of coke and iron are piled up. The iron charge consists of an appropriate mixture of pig iron, steel scrap and grey–cast iron. Furthermore, between 4 and 7 per cent of lime are added. The limestone bonds the silicon dioxide contained in the coke to form a fluid slag that can be easily separated from the iron.

Air is blown in through nozzles. The combustion of the coke produces a high temperature in the shaft which melts the iron so that it can drip down. It is collected in the fore–hearth from where it is tapped from time to time. The molten iron is transported in ladles to the moulds where it is cast.

3.3.8.2. Cast Iron with Flaked Graphite (Grey Cast Iron)

Silicon is added to the molten metal. This precipitates the carbon as graphite which is bedded in the basic structure in the form of flakes (lamellae). Consequently, the fracture surface is grey from which its name, grey cast iron, is derived from. The quantity and size of the graphite flakes influence the tensile strength because they change the bearing cross–section.

Compression forces are transmitted very well by the graphite flakes. The compression strength is about four times as high than the tensile strength.

Behaviour during cutting: Cutting produces short friable chippings that do not impede the cutting operation.

No lubricants and cooling agents are required to cut grey cast iron.

The hard cast skin causes considerable tool wear. It has to be removed entirely during the first cut.

Uses: Grey cast iron is used for cast parts that do not have to withstand tensions, shocks and knocks, e.g. casings, cylinders, pipes, bearing bodies, pulleys, gearwheels, etc. Grey cast iron is well suited as a material for bearings. Its structure with the imbedded graphite flakes gives it good running properties.

3.3.8.3. Cast Iron Containing Spheroidal Graphite

The graphite in this kind of cast iron is in spheroidal form instead of the flakes found in grey cast iron. This is achieved by adding magnesium or cerium to the molten metal after tapping. The spheroidal form of the graphite modifies the properties of the cast iron compared with the flakes graphite. Its tensile strength can amount to 700 MPa. Its toughness is increased. Spheroidal graphite cast iron behaves in a similar manner as grey cast iron when it is machined.

Spheroidal graphite cast iron is used for crankshafts, rollers, for the construction of furnaces, and in pipe fabrication.

3.3.8.4. White Cast Iron

Practically the whole of the carbon is retained in chemical combination with the iron as carbon of iron. This makes the cast iron very hard and gives the fracture its white colour from which the name is derived.

Chilled cast iron is obtained when manganese is added to the casting which is then rapidly chilled after casting. The casting is fully through hardened.

Chilled white–face cast iron has a soft core of grey cast iron and a hard shell in which the carbon is bonded as iron carbide. This is achieved by fast chilling of the casting. The molten melt is poured into water–cooled steel moulds or in sand moulds containing steel plates at certain points for rapid dissipation of the heat.

White cast iron can only be machined by carbide–tip tools and by grinding.

Uses: White cast iron is used for brake jaws, crushing jaws, pan grinders, sand–blasting nozzles, and hydraulic pistons. Chilled white–face cast iron is employed for rollers in flour mills, for the jaws of stone crushers, the wheels of railway rolling stock, stamps and drawing dies.

3.3.8.5. Malleable Cast Iron

Malleable cast iron has steel−like properties. The workpieces are cast from white pig iron and then annealed (tempering). Grey cast iron cannot be tempered.

White malleable cast iron: The castings are bedded in substances that give off oxygen (F_2O_3) and are annealed for about 5 days. The iron carbide decomposes into iron and carbon. CO_2 escapes out of the structure. The skin is strongly decarburized, while the core becomes tough due to the conversion of the iron carbide.

Black malleable cast iron: The castings are annealed in sand or ashes. The iron carbide decomposes, but the carbon remains in the structure to form temper carbon enclosed in a steel−like structure. The temper carbon gives fracture surfaces a black colour.

Properties: Thin workpieces can be easily deformed by knocks or pressure. Black malleable cast iron can be hardened and refined (see Section 3.3.6). Malleable cast iron workpieces can be soldered and braized, machined and galvanized. They have a tensile strength of about 390 MPa.

Uses: Malleable cast iron is used for simple tough parts such as the parts of locks, parts for sewing machines, pipe fittings, chains, clamps and spanners.

3.3.9. Sintered Iron

3.3.9.1. Production

Objects made of clay are fired in a pottery. The clay parts bake together during firing without become molten. This process is known as sintering. Sintered objects are strong and dense. Metallic objects can also be produced by a similar process. Wire and sheet scrap is cut up and reduced to a powder in a ball mill. The powder is pressed into a mould that has the shape of the workpiece that is to be produced.

The pressed parts are then sintered in an electric furnace at temperatures just below the melting point of the compressed powder. The powder grains fuse and form a solid body. Sintered iron is noted for its high dimensional stability and high surface quality.

3.3.9.2. Properties and Uses

Sintered iron has a minimum tensile strength of 350 MPa. Parts made of sintered iron have many pores so that they can be impregnated with other substances. This property is exploited for sliding bearings. The bearings are immersed in oil. The bearings become hot due to friction so that they give off the oil they contain as a lubricant.

Sintered iron is used for mass productions of parte for the motor vehicle industry, fine−limit engineering and for machine building. Machine parts mode of sintered iron save expensive and time−consuming machining operations. The sintering process, however, is only an economical proposition if the parts are produced in large quantities.

Exercises and Questions

1. By what aspects can steel be classified?

2. How does the composition of low−alloy steel differ from that of high−alloy steel?

3. Upon what do the properties of unalloyed steel depend upon?

4. How does unalloyed steel behave towards cutting?

5. How high does the carbon content of unalloyed − steel have to be to allow its used as tool steel?

6. Which tools can be produced from unalloyed tool steel?

7. Which alloying elements make steel resistant to rust (stainless steel)?

8. Which alloying element gives steel for anti−friction bearings its resistance to wear?

9. How do cold and hot cutting steels differ in their properties?

10. Which properties do turning tools have when they are made of high−speed cutting steel?

11. What is cast steel and for what purpose is it employed?

12. Which measures are taken to eliminate tensions which usually exist in freshly cast workpieces made of cast iron?

13. What is cast iron?

14. Name the kinds of cast iron you know.

15. Under which conditions is the carbon contained in grey cast iron precipitated in the form of flakes?

16. Give examples of application of grey cast iron containing graphite flakes.

17. Which measures have to be taken to precipitate the graphite contained in cast iron in a spheroidal form?

18. How do the properties of grey cast iron with graphite flakes differ from those of grey cast iron containing graphite in a spheroidal form?

19. What is white cast iron?

20. Which tools are required to machine white cast iron?

21. List examples of application of white cast iron.

22. What is malleable cast iron?

23. Describe the procedure of producing castings made of white malleable cast iron.

24. How are castings produced from black malleable cast iron?

25. What are the properties of workpieces made of malleable cast iron?

26. How are workpieces made of sintered iron?

27. Which property of sintered iron is exploited for sliding bearings made of sintered iron?

3.4. Non−Ferrous Metals

3.4.1. Heavy Metals

3.4.1.1. Copper

Sources of Copper

Copper occurs primarily in the form of copper ores. Due to its pronounced tendency to bond with sulphur, copper is present in ores usually in the form of a sulphide. Large copper deposits are in America (USA, Chile,

Peru), Africa (in the Congo area), the Soviet Union (Urals), Australia, Spain, Norway and Sweden.

Derivation of Copper

The sulphidic ores are heated in the atmosphere (roasted). Part of the sulphure bonds with the oxygen in the atmosphere to form sulphur dioxide, simultaneously increasing the metal content of the ore. The ore is then smelted in a shaft furnace together with sand. Coke is used as fuel. A copper concentrate is obtained that is known as raw copper matte. The copper in the raw copper matte is still bonded to sulphur.

The molten copper matte is transferred to a converter (see Section 3.3.4.1.) where air is blown through the smelt. The sulphur is burnt, forming sulphur dioxide. Other components of the ore float as slag on the smelt. The slag is poured off and the crude copper, or 'blister', is cast into moulds to obtain ingots. The crude copper still contains about 2 per cent of impurities.

Copper that is used as a conductor in electrical engineering must have a purity of 99.97 per cent. That is why it is subjected to electrolytic refining (figs. 3.66 and 3.67).

An ingot each of crude copper and an ingot of pure copper is suspended in a copper sulphate solution.

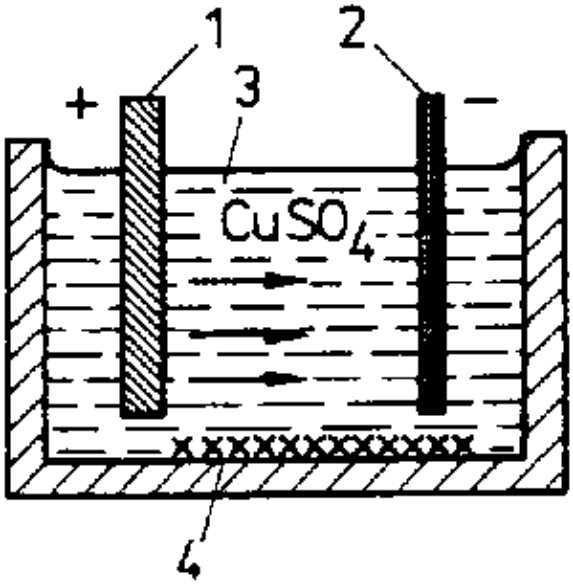

Fig. 3.66. Schematic representation of electrolytic refining of copper.

1 crude copper plate;
2 electrolytic copper;
3 copper sulphate solution;
4 impurities extracted out of the crude copper

The negative pole of a voltage source is linked to the pure copper ingot, while the positive pole is connected to the crude copper.

The chemically pure copper contained in the copper sulphate solution is attracted to the pure copper ingot connected to the negative pole. The copper of the crude ingot is dissolved. The impurities settle at the base of the vessel.

Properties

Melting point:	1083°C
Specific gravity:	8.96 g/cm^3
Tensile strength:	200 MPa; strain–hardened 400 MPa

Excellent conductor of electricity and heat

Technological Properties: Copper is difficult to cast without the addition of alloys. The melt dissolves air which is then expelled as the metal solidifies, thus forming bubbles in the casting. Copper is readily formable in a hot

or cold state. Cold forming (e.g. drawing or hammering) makes it hard and brittle. It can be made soft again by annealing and quenching. A wedge angle of 55°, a rake angle of 25, and a cutting speed of 95 m/min are recommended for machining (fig. 3.68).

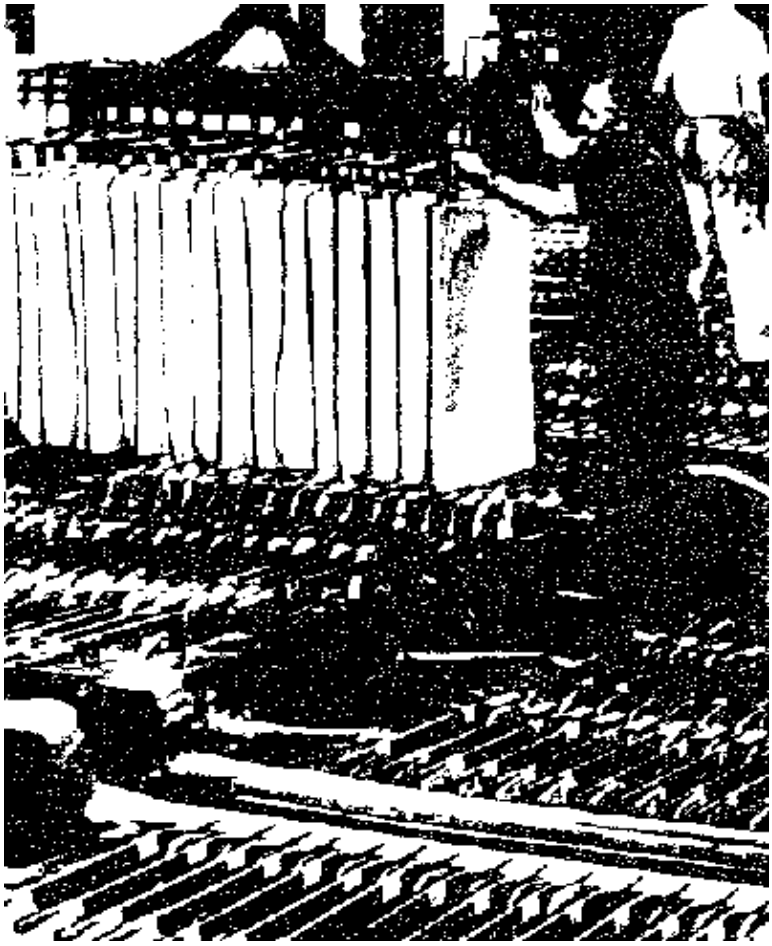

Fig. 3.67. Electrolytic refining plant in a copper foundry

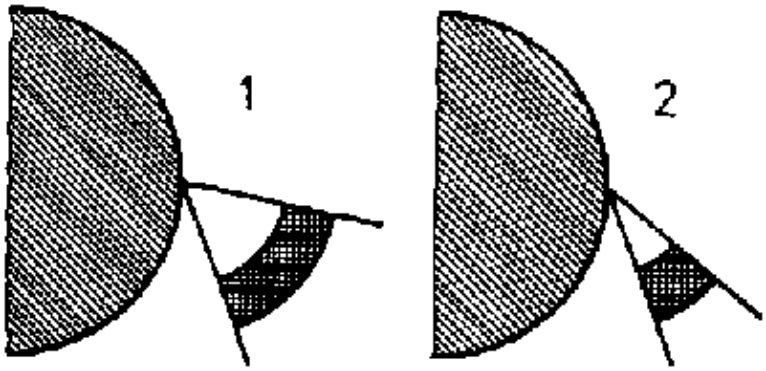

Fig. 3.68.

The tools required to cut copper differ from those used to cut steel
1 steel;
2 copper

Chemical Resistance: Copper becomes covered by a dense oxide skin (Cu_2O) when exposed to a dry atmosphere that protects the metal underneath from the oxygen contained in the atmosphere. That is why copper remains stable in a dry atmosphere.

When heated, copper becomes covered with a black oxide layer (CuO). In the presence of a humid atmosphere, copper becomes protected by a superficial layer of green basic carbonate called patina.

When copper comes into contact with acetic acid it forms a poisonous basic copper acetate known as verdigris.

Copper is dissolved by nitric acid and hot sulphuric acid, but it is hardly attacked by cold sulphuric acid.

Uses of Copper

Electrical engineering:	As material for electrical conductors
Machine building and apparatus construction:	As material for heat exchangers (e.g. fire bushings and cooling coils); as a material for heat−resistant seals (e.g. seals for spark plugs in combustion engines)
Metallurgy:	As alloy in tin bronze (copper and tin), lead bronze (copper and lead), aluminium bronze (copper and aluminium), brass (copper and zinc), constantan (60 per cent copper and 40 per cent nickel). German silver (60 per cent copper, 25 per cent nickel and 15 per cent zinc).

3.4.1.2. Lead

Sources of Lead

Galena, a lead sulphide (PbS), is the commonest lead ore. It contains between 2 and 10 per cent lead and 1 per cent silver. Lead ores are mined in the Soviet Union, China, Yugoslavia, India, Burma, North and South America, North Africa and Spain.

Derivation of Lead

The lead ore is roasted to decompose the lead sulphide and burn the sulphur. The lead is oxidized into lead oxide (PbO) by this process. The lead oxide is then reduced with coke in a shaft furnace. The resulting lead contains copper, antimony, bismuth and silver as impurities. The lead is purified by electrolytic refining, similar as copper.

Properties of Lead

Melting point:	327°C
Specific gravity:	11.35 g/cm^3
Tensile strength:	20 MPa
Very soft; can be cut with a knife	

Technological Properties: Lead is very ductile so that it can be rolled out into a foil. It can be easily cast, welded and soldered, but it is not suitable for machining because it clogs up the tools.

Chemical resistance: It is rapidly covered by a dull grey protective oxide layer when exposed to the atmosphere. Lead is resistant to many chemicals. It is only dissolved by nitric acid and acetic acid.

Uses of Lead

Chemical industry:	As lining material for reaction vessels
Electrical engineering:	For storage batteries
X−ray engineering:	As screening material because lead absorbs X−rays
Machine building:	As lead baths for heat treatment of steel. As type metal for letter press printing; the lead is alloyed with antimony so that the cast letters will not wear so quickly during printing (the resulting alloy is harder than lead)

An alloy of lead and tin is used as solder for soft soldering. As bearing metal in the form of an alloy consisting of lead, antimony and tin.

Caution!

Remarks on Health Protection:

Lead and all its compounds are poisonous. Lead is accumulated in the human body so that continued intake of even the minutest quantities, in themselves quite harmless, ultimately lead to lead poisoning.

Lead, however, can be used for pipes to conduct drinking water. This is because drinking water contains salts that firmly bond with lead, forming an impermeable protective layer of lead carbonate and lead sulphate which does not allow the water to come into contact with the lead underneath.

3.4.1.3. Zinc

Sources of Zinc

As an ore in the form of zinc sulphide (ZnS) and zinc carbonate ($ZnCO_3$).

The ore is mined in the Soviet Union, China, Poland North Africa, Canada, USA, Great Britain and France.

Derivation of Zinc

Zinc ores are roasted to convert them into zinc oxide. This, in turn, is transformed into zinc sulphate by sulphuric acid (see Section 2.7.2.). Zinc is extracted from the zinc sulphate solution by electrolysis (see Section 3.4.1.1. and 4.4.1.).

Properties of Zinc:

Melting point:	419°C
Specific gravity:	7.14 g/cm^3
Tensile strength:	about 100 MPa

Has the longest extensibility of all metals when heated.

Technological Properties: Zinc is brittle at normal temperatures, but it becomes soft and ductile at 100°C and can be rolled into sheets. At temperatures exceeding 200°C it becomes very brittle and can be crushed into a powder. Zinc is readily weldable and can be soldered.

Chemical Resistance: Zinc is coated by a firm layer of zinc oxide or zinc carbonate when exposed to the atmosphere. This layer protects the metal underneath from further oxidation. Zinc is dissolved by diluted acids and lyes.

Caution !

Remarks on Health Protection:

Foods must not be stored in vessels made of zinc or in galvanized containers. Zinc forms poisonous salts with the acids contained in foods.

Uses of Zinc

Electrical engineering:	Zinc cells for torch batteries
Steel construction and machine building:	As coating material for protection against rust (see Section 4.4.)
Metallurgy:	For the production of zinc alloys

3.4.1.4. Tin

Sources of Tin

Most tin ores contain tin oxide (SnO_2). Tin ore deposits are found in the Soviet Union, China, Vietnam, Malaysia, Indonesia, Thailand, Burma and Nigeria.

Derivation of Tin

Tin ore is reduced with carbon in a shaft furnace. The crude tin produced during this process is purified by electrolytic refining (pure tin).

Properties of Tin

Melting point:	232 °C
Specific gravity:	7.29 g/cm^3
Tensile strength:	35 MPa

Forms of Tin: At temperatures between 18 and 161 °C tin is a silvery–white ductile metal with a high lustre. Below 18 °C tin is gradually changed into a grey powder, a change that takes place within a few hours at low temperatures (–40 °C). The grey powder is the stable form of tin.

Technological Properties: Tin can be easily rolled out into thin foils (silver paper). It is ideal for soldering. Tin is not poisonous.

Chemical Resistance: Tin is very stable in the atmosphere and water. It is rapidly dissolved by strong acids (hydrochloric acid, nitric acid). Tin is not attacked by fruit acids.

Uses of Tin:

Coating metal:	Machine parts that come into contact with foods are tin–coated (e.g. parts of meat–processing machines and fruit presses). Tin is primarily used for the production of tin–plate sheet. This is steel sheet that has been tinned on both sides. Tin–plate sheet is extensively employed for food cans.
Alloying metal:	Soft solder, bearing metals and bronze are tin alloys.

Table 3.7. Further heavy metals

Name Symbol	Properties	Uses
Tungsten W	Specific gravity: 19.1 g/cm^3 Melting point: 3380 °C Tensile strength: 420 kp/mm^2 Dull grey, hard, brittle; tungsten is unstable in the atmosphere	Production of alloyed steel, tungsten wire for incandescent filaments, thermocouple elements, hard metals. Remarks: Tungsten is derived in a powdered form. Tungsten is sintered and not melted.
Vanadium V	Specific gravity: 5.8 g/cm^3 Melting point: 1720 °C Steel grey, hard, brittle, but can be easily formed by forging and rolling; unstable in the atmosphere; non–magnetic	Steel alloys and alloys with other metals
Chromium Cr	Specific gravity: 7.1 g/cm^3 Melting point: 1900 °C Silver lustre, hard, brittle; very stable in the atmosphere, acid–resistant	Surface refining (chromium plating) of metals; steel alloys and alloys with other metals; electrolytically deposited layers achieve high hardness values (hard chromium plating)
Nickel Ni	Specific gravity: 8.9 g/cm^3 Melting point: 1455 °C	Surface refining (nickel plating) of metals; steel alloys and alloys with other metals; battery

	Tensile strength: 30 to 42 kp/mm^2 Silvery white, hard, stable in the atmosphere up to 800°C, forgable, weldable	electrodes
Manganese Mn	Specific gravity: 7.3 g/cm^3 Melting point: 1221°C Silvery white, brittle, can be powdered; magnetic in certain alloys	Steel alloys, alloys with other metals
Silicon Si	Specific gravity: 2.4 g/cm^3 Melting point: 1414°C Metalloid, dark grey to black, metallic lustre	Steel alloys, alloys with other metals
Cobalt Co	Specific gravity: 8.8 g/cm^3 Melting point: 1490°C Steel grey, properties similar to those of nickel, stable in the atmosphere	Steel alloys, hard metal, electrical contacts, surgical instruments
Molybdenum Mo	Specific gravity: 10.2 g/cm^3 Melting point: 2630°C Brinell hardness: 147 HB Tensile strength: 140 to 182 kp/mm^2 Silvery white, grey in powdered form, non–magnetic	Steel alloys Electrical engineering Chemical engineering
Niobium Nb	Specific gravity: 8.6 g/cm^3 Melting point: 2415°C Metallic lustre, readily rolled and weldable, resistant to acids	Alloying element for special grades of steel Nuclear engineering Radio engineering
Tantalum Ta	Specific gravity: 16.6 g/cm^3 Melting point: 3030°C Brinell hardness: 300 HB Tensile strength: 120 kp/mm^2 Platinum–grey lustre, firm and tough, acid–resistant	Steel alloys for spinning nozzles, surgical instruments, rectifier valves, X–ray tubes
Cadmium Cd	Specific gravity: 8.6 g/cm^3 Melting point: 321°C Silvery white, soft and tough, corrosion–resistant	Alloying element for bearing metals, surface refining (cadmium–coating) of metals

3.4.1.5. Other Important Heavy Metals

Table 3.7 gives a survey of the properties and uses of other heavy metals that are of importance for the metalworking industry.

Exercises and Questions

1. Describe the process of electrolytic refining of crude copper.

2. Why is it that copper cannot be used to produce castings?

3. Copper becomes hard by cold forming. How can this hardness be removed?

4. Why is copper stable in the atmosphere?

5. Under which conditions does copper become coated with a black oxide layer?

6. Why is copper used in large quantities in the electrical engineering industry?

7. Why is a soldering bit made of copper?

8. List the properties of lead.

9. Lead and lead compounds are poisonous. Explain why lead pipes can be used nonetheless for water mains?

10. Under which conditions can zinc be rolled out into sheets?

11. Why is it impermissible to store foods in galvanized containers?

12. For what is zinc used in steel engineering and machine building?

13. Although lead, zinc and tin are not noble metals, why are they not totally destructed by the oxygen contained in the atmosphere?

14. What is silver paper?

15. What is tin–plated sheet?

16. Why are fruit presses and meat–processing machines plated with tin?

17. How do vessels made of tin change when they are stored for prolonged periods at temperatures lower than 13°C?

18. For what purpose is nickel used in the metal–working industry?

3.4.2. Light Metals

3.4.2.1. Aluminium

Sources of Aluminium

Bauxite is the most important mineral for the derivation of aluminium. It is an aluminium oxide mixed with silicon dioxide and iron oxides. Bauxite is mined in France, Italy, Greece, Rumania, Hungary, Soviet Union, South America, Australia and USA.

Derivation of Aluminium

Bauxite is subjected to an extensive process in which soda lye is used to leach out aluminium oxide which is then filtered out.

Since there is no substance that has a higher tendency to bond with oxygen than aluminium, it is not possible to reduce aluminium oxide in the same manner as other metal oxides.

Electrical energy is used to separate the aluminium from the oxygen while the aluminium oxide is being smelted, a process that is known as electrolytic fused smelting (fig. 3.69).

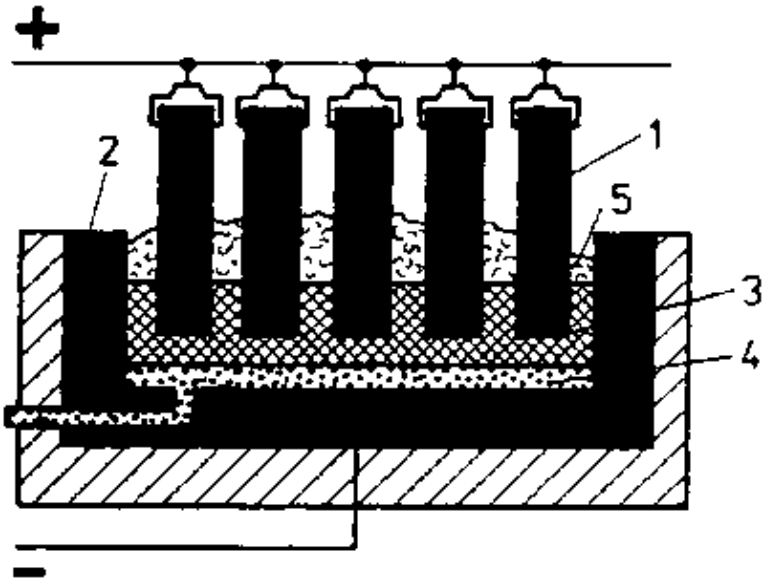

Fig. 3.69. Schematic representation of electrolytic fused smelting of aluminium

1 carbon electrodes; vat lined with carbon as electrode; molten salt bath; 4 aluminium smelt; 5 salt layer excluding the oxygen contained in the atmosphere

Electrolytic fused smelting is conducted in large shallow vats line on the inside with carbon to which the negative pole of a source of voltage is applied. The smelted aluminium oxide is held in this vat. Large carbon rods, linked to the positive pole of the voltage source, are immersed in the smelt. The electrical current decomposes the smelted aluminium oxide so that the aluminium migrates to the negatively charged base of the vat, while the oxygen migrates upwards to the carbon rods. The carbon rods are burnt into carbon dioxide during this process.

Properties of Aluminium

Melting point:	660 °C
Specific gravity:	2.7 g/cm^3
Tensile strength:	70 to 200 MPa

Softer than copper

A good conductor of electricity.

Technological Properties: Aluminium is ductile and can be easily plastically formed. It can be easily drawn, rolled and cast. Aluminium parts can be welded together. A firm oxide skin is always formed on aluminium which is instantly reformed as soon as it is filed off. That is why soft soldering of aluminium requires–special processes. Machining is difficult because aluminium clogs up the tools. Petroleum can be used as a coolant to enhance machinability. It permits much higher cutting speeds than steel.

Chemical Resistance: Aluminium has a marked tendency to bond with oxygen. In the atmosphere it becomes covered by a thin, transparent and dense oxide coating which protects the metal underneath from oxygen molecules. This makes aluminium very durable in the presence of a humid atmosphere. It is instable towards acids and lyes, but it is not attacked by concentrated nitric acid (see Section 2.5.3.).

Remarks:

The protective oxide skin of aluminium can be intensified by electrolytic oxidation (fig. 3.70). For this purpose, the piece of aluminium is immersed in diluted sulphuric acid and is connected to the positive pole of a voltage source. An iron plate is used as counter electrode and it is connected to the negative pole of the voltage source. Oxygen atoms are liberated at the positively charged aluminium piece (see Test 2.4 and Section 2.2.2.). The oxygen atoms penetrate the fine pores of the oxide skin and oxidize the aluminium, i.e. the thickness of the oxide skin is increased inwards. This process is known as anodizing. The oxide skin has the property of absorbing dyes. Chemical bonding of the dye with the aluminium oxide makes it wash and light fast.

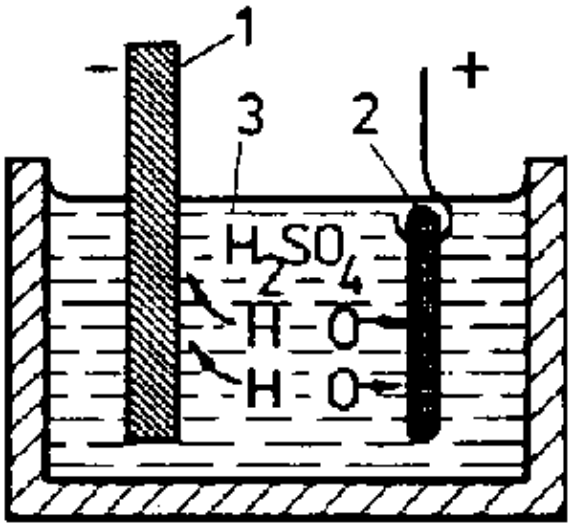

Fig. 3.70. Schematic representation of the anodizing process

1 carbon electrode;
2 piece of aluminium;
3 diluted sulphuric acid

Uses of Aluminium

Electrical engineering:	Open–air power lines, contact rails, motor windings, parts of generators
Vehicle building:	Bodywork, wheel rims, engine blocks, pistens connecting rods
Machine building:	Parts of office machines, optical instruments, bicycle frames
Airplane construction:	Fuel lines, propeller blades, fuselage framework, outer shell
Chemical industry:	Pipelines, mixers, stirrers, containers
Building:	Roofing, fittings, window frames, ladders, rails

3.4.2.2. Magnesium

Sources of Magnesium

Magnesium only occurs in nature in the form of chemical compounds. The most important magnesium ores contain magnesium carbonate ($MgCO_3$), magnesium–calcium carbonate ($MgCO_3 . CaCO_3$), and magnesium–potassium–chloride ($MgCl_2 . KCl . 6H_2O$). Magnesium ores are widespread. For instance, vast quantities of ores containing magnesium carbonate are found in the Urals of the Soviet Union. The deposite of magnesium–potassium–chloride in the German Democratic Republic are virtually inexhaustible.

Derivation of Magnesium

In the German Democratic Republic magnesium is derived from magnesium–potassium–chloride. The ore is cleaned and dehydrated. Calcium fluoride (CaF_2) is added for electrolytic fused smelting at about 750°C (similar as aluminium production) for decomposition into magnesium and chlorine.

Properties of Magnesium

Melting point:	657°C
Specific gravity:	1.74 g/cm^3
Tensile strength:	180 MPa

Softer than aluminium.

Technological Properties: Magnesium is ductile. It can be easily drawn, rolled and cast. It can be machined at high cutting speeds (600 to 800 m/min), but this requires the same kind of tools as for aluminium.

Chemical Resistance: Magnesium has a pronounced tendency to bond with oxygen. It burns with an intense white light. When exposed to the atmosphere it becomes covered with a dull protective oxide coating. It is strongly attacked by acids and salts, but is relatively stable towards lyes.

Caution! Remarks on Fire Hazards Small magnesium parts and shavings can become ignited during machining operations. Dull tools intensify the heating of shavings. Burning magnesium cannot be extinguished with water due to the high combustion temperature of magnesium which instantly splits the water into hydrogen and oxygen. Sand or the dressings of castings should always be instantly accessible for use as extinguisher.

Molten magnesium is protected against oxidation by covering salt and sulphur dust.

Uses of Magnesium

For fireworks; in flash bulbs for photography. Pure magnesium is not used in machine building, but it is an alloying component of many light metal alloys.

Exercises and Questions

1. By which processes is the oxygen in aluminium oxide extracted?

2. What are the technological properties of aluminium?

3. How can tool clogging in connection with aluminium machining be appreciably diminished?

4. How do tools for aluminium machining differ in their form from those used for steel machining?

5. How can the oxide coating on aluminium parts be intensified?

6. Describe the anodizing process.

7. Give examples of application of aluminium.

8. What are the technological properties of magnesium?

9. What favours the ignition of magnesium shavings?

10. Why should water not be used to extinguish magnesium fires?

11. Which extinguishing media should be constantly available at the point of magnesium machining?

12. How is molten magnesium protected against oxidation?

3.5. Alloys of Non−Ferrous Metal

3.5.1. General Remarks

The mechanical, thermal and chemical properties of pure non−ferrous metals can be substantially improved by alloys with other metals or non−metals.

Alloys are classified according to the number of alloying substances they contain, namely into binary, ternary and multi−compound alloys.

A further difference is made according to their formability, namely wrought alloys and casting alloys (Table 3.8).

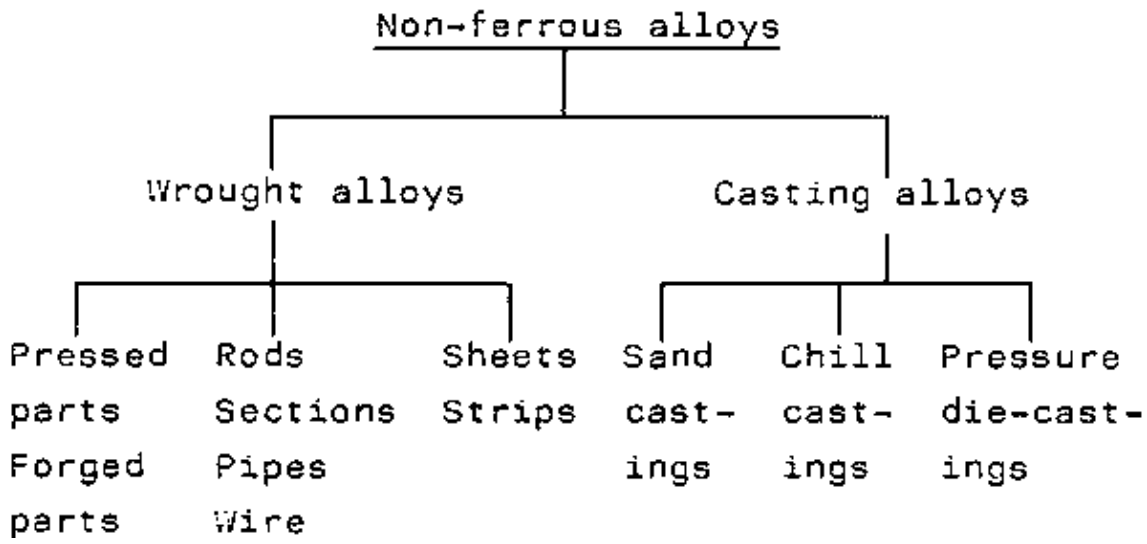

Table 3.8. Classification of alloys by their formability

Wrought alloys are specifically formulated for bending, forging, rolling, drawing and pressing.

Casting alloys are specifically formulated for casting

3.5.2. Heavy Metal Alloys

3.5.2.1. Brass

Brass is an alloy of copper and zinc. Different grades of brass are obtained by varying the shares of copper and zinc.

General Properties of Brass

Melting point: about 1000°C

Specific gravity: about 8.5 g/cm^3

Strength and hardness depend upon the composition of the brass.

Technological Properties

Casting alloys: The casting temperature is about 1050°C. Longitudinal contraction upon solidification of the melt is about 1.5 per cent. Cast alloys can also be well formed in a cold state.

Wrought alloys: They are readily formable. They can be rolled out into foils right down to a thickness of only 0.0005 mm. Cold forming produces tensions, but these can be eliminated by heating to a temperature of 250°C.

Machinability: Brass is easily machinable. It can be cut at high speeds with high–speed cutting tools.

Wrought and casting alloys of brass can be soldered and welded.

Chemical Resistance:

Brass is resistant to water, sea water, lyes and fruit acids. Brass is dissolved by ammonia, hydrochloric acid, sulphuric acid and nitric acid.

Uses of a Few Grades of Brass

Wrought alloys	
58 % Cu + 42 % Zn	Well suited for turning on automatic lathes; screws, bolts, turned and punched parts for electrical engineering, fittings
60 % Cu + 40 % Zn	Rivets and turned parts which are subsequently subjected to upsetting operations
72 % Cu + 28 % Zn	Turbine blades, deep–drawn parts, heat exchangers
Casting alloys	
60 % Cu + 40 % Zn	Casings, fittings, bushings
57 % Cu + Zn + Al + Fe + Mn	Highly stressed parts in vehicle, ship and machine building, marine–resistant castings

3.5.2.2. Bronze

Bronze is copper combined in varying proportions with other alloying elements except zinc. The most important alloying elements are tin, aluminium and lead. Hence, bronze is differentiated according to tin bronze, aluminium bronze and lead bronze.

General Properties of Bronze

Tin bronze

Melting point: about 900 °C

Specific gravity: 8.5 to 8.9 g/cm^3

The values for strength and hardness depend upon the composition of the alloy and the forming methods.

Casting alloys: tensile strength 150 to 200 MPa

Wrought alloys: tensile strength 350 to 750 MPa

Technological Properties

Casting alloys: casting temperature 1000 to 1150 °C; longitudinal contraction upon solidification of the casting is between 0.75 and 1.5 per cent.

Wrought alloys are well suited for cold forming if the tin content is lower than 10 per cent; it can be easily machined at cutting speeds of 150 to 400 m/min; it is well suited for brazing, but is not weldable because its tensile strength decreases in the presence of high heat.

Chemical Resistance

Tin bronze is resistant to chemical influences

Aluminium bronze

Specific gravity:	7.6 to 8.4 g/cm^3
Tensile strength:	300 to 700 MPa

Technological Properties

Aluminium bronze is readily formable, both hot and cold, and it can be used for casting.

Aluminium bronze is weldable by oxyacetylene welding methods in connection with suitable fluxes. Special

electrodes are required for electric welding of aluminium bronze.

Chemical Resistance

Aluminium bronze is resistant to diluted hydrochloric and sulphuric acid and to sea water (Table 3.9.).

Table 3.9. Properties and uses of some grades of bronze

Composition	Properties and uses
94 % Cu + 6 % Sn	Tin bronze: high strength and good elasticity. For leaf and tubular springs, diaphragms, and parts for the chemical industry.
95 % Cu + 5 % Al	Aluminium bronze: high hot strength and high resistance to wear. For machine parts used in the chemical industry, fittings working at higher temperatures.
75 % Cu + 25 % Pb	Lead bronze: good sliding and anti–seizure properties. For sliding bearings of combustion engines

3.5.3. Light Metal Alloys

3.5.3.1. Aluminium Alloys

Technological Properties

Cold forming: Aluminium alloys are readily cold formable, the most important methods being cold rolling, cold extrusion, drawing, compression and bending.

Cold rolling strengthens the alloy, while ductility is diminished, but tensile strength and hardness are increased.

Hot forming: Aluminium alloys can be hot formed at temperatures between 320 and 505°C.

Machining: Aluminium alloys can be machined at much higher cutting speeds than steel.

Aluminium alloys containing high quantities of silicon have hard grains in their structure, and these cause considerable wear on cutting tools. This makes it necessary to use carbide cutting tools. Coolants are not required for machining. Lubricants, such as soap water or cutting oil, improve the surface quality.

Joining: Parts made of aluminium alloys can be joined by riveting, bolting, welding and adhesive bonding.

When riveting or bolting, the parts that are joined together must be made of the same alloy to prevent material decomposition by electrochemical corrosion (see Section 4.3.).

Welding and soldering produces a firm oxide coat that melts at a higher temperature than the metal. The oxide coating has to be dissolved by a special flux. Hardened aluminium alloys lose their strength when they are welded (see heat treatment).

Heat treatment: Some aluminium alloys can be hardened in a similar manner as steel. Strength and hardness are increased. Most ternary alloys with copper, manganese and silicon as primary additives can be hardened.

Hardening: The alloy is heated to a temperature of about 500°C and then quenched. It is then stored at room temperature (about 20°C) for several days. This period of storage is known as natural ageing. Some alloys can be artificially aged. For this purpose the alloy is heated to about 160°C for between 8 and 12 hours. Storage (ageing) creates tensions in the metal which are the reason for the increase of strength and hardness.

Soft annealing: The changes of structure, caused by the tensions that are responsible for hardness, can be eliminated by heating the aluminium alloy to between 300 and 400°C.

Surface treatment: Just as pure aluminium, aluminium alloys are likewise covered by a dense oxide coating when they come into contact with the atmosphere. This oxide skin can be thickened by anodizing (see Section 3.4.2.1.).

Paints and varnishes containing lead or tin compounds as pigments must not be coated on aluminium alloys because they enhance electrochemical corrosion of the aluminium alloy (see Section 4.3.).
(Table 3.10)

3.5.3.2. Magnesium Alloys

Technological Properties

Cold forming: Magnesium alloys are cold formable only to a limited extent. Thus, the bending radius of magnesium alloy sheets must be at least twice as much as the thickness of the sheet.

Hot forming: The resistance to forming increases with the growing share of alloying additives. Hard alloys have to be heated to 220°C for forming. Magnesium alloys can be forged within a temperature range of 300 to 380°C.

Machining: Magnesium alloys are easily machined. The cutting pressure is only one sixth of that required for steel.

Caution! Remarks on Fire Hazards No watery coolants must be used for cooling. Fine shavings and dust of magnesium alloys easily ignite during machining. The high combustion temperature of magnesium separates water into hydrogen and oxygen. Fires should only be quenched with dry sand or casting dressings.

Table 3.10. Properties and uses of some aluminium alloys

Components	Properties and uses
Wrought alloys	
94 % Al + 3.5 % Cu + 0.9 % Si	Specific gravity: 2.8 g/cm^3 Very high strength, hardenable, resistant to sea water. For parts subjected to high stresses.
96 % Al + 4 % Mg	Specific gravity: 2.6 g/cm^3 Medium strength, good formability and weldability, good resistance to chemicals. For parts subjected to medium stresses in shipbuilding, chemical engineering and the food industry.
96 % Al + 3 % Mg + 1 % Mn	Specific gravity: 2.7 g/cm^3 Medium strength, resistant to sea water. For parts subjected to medium stresses, high resistance to weathering influences and sea water. For motor vehicle bodywork and parts used in the food industry.
Casting alloys	
90 % Al + 5 % Cu + 5 % Zn	Specific gravity: 2.9 g/cm^3 Sand casting alloy for simple parts that are not subjected to high stresses.
88 % Al + 12 % Si	Specific gravity: 2.65 g/cm^3 Excellent casting properties, good chemical resistance. For all kinds of thin–walled and shock–resistant castings.
97 % Al + 2 % Mg + 1 % Si	Specific gravity: 2.7 g/cm^3 Hardenable, good chemical resistance to sea water and weak lyes. For castings that

	are subjected to medium and high stresses in the chemical industry, building and for apparatus construction.

Table 3.11. Properties and uses of some magnesium alloys

Components	Properties and uses
Wrought alloys	
98 % Mg + 2 % Mn	Specific gravity: 1.8 g/cm^3 Corrosion resistance, readily weldable, alloys for sheets. For casings, fuel tanks, sheet sections and fittings.
94 % Mg + 6 % Al	Specific gravity: 1,8 g/cm^3 Medium strength, limited weldability. For parts subjected to medium stresses in motor vehicle and general machine building.
Casting alloys	
95 % Mg + 3 % Al + 2 % Zn	Specific gravity: 1.8 g/cm^3 High extension. For strong castings subjected to shocks.
92 % Mg + 7.5 % Al + 0.5 % Mn	Specific gravity: 1.8 g/cm^3 High tensile and bending strength. For castings of the highest strength subjected to shocks and temperatures up to 200°C

Joining: The commonest forms of joining are riveting, adhesive bonding and welding. The best material for rivets is pure aluminium and an alloy consisting of 97 per cent Al + 3 per cent Mg.

Surface treatment: Magnesium alloys are always covered by a thin and dense oxide coating. Contrary to aluminium alloys, this coating cannot be strengthened. Good protection is obtained by pickling and paintwork (Table 3.11).

3.6. Hard Metals

3.6.1. Derivation

Hard metals are sintered alloys of powders of tungsten carbide and titanium carbide cemented into a solid mass consisting of cobalt or other elements. Carbides are compounds of metals and carbon. Sintering is a process of baking compressed powders at a temperature just below their melting point (see Section 3.3.9.).

Hard metals are the hardest metallic materials.

3.6.2. Properties

Specific gravity: 10 to 15 g/cm^3

Melting point: about 2700°C

Hardness stability: up to 1000°C

Technological Properties

Hard metals, or cemented carbides as they are also known, are very expensive. That is why only the actual cutting bit of tools is made of hard metal, while the remaining part of the cutting tool is made of a suitable unalloyed or alloyed steel. The carbide bits are soldered or cemented on to the tool, or they are clamped on by corresponding devices. The cutting speed of carbide–tipped tools is four times higher than that of

high−speed cutting steel tools. Hard metals are ground on special machines fitted with silicon carbide grinding wheels, and are then lapped with a special paste.

Exercises and Questions

1. How do wrought alloys and casting alloys differ?

2. What is brass?

3. What are the technological properties of brass?

4. Which chemical compounds attack brass?

5. What is the composition of brass that is used to produce turbine blades?

6. What is bronze?

7. How do tin bronze and aluminium bronze differ in their composition?

8. To which chemicals is aluminium bronze resistant?

9. For what is lead bronze used in motor vehicle building?

10. What are the technological properties of aluminium alloys?

11. What are the machining properties of aluminium alloys containing a high proportion of silicon?

12. Why does the welding of aluminium alloys require a special flux?

13. How are aluminium alloys hardened?

14. Why is it impermissible to weld parts made of hardened aluminium alloys?

15. What has to be observed when sheet made of magnesium alloy is to be bent?

16. Under which conditions can hard magnesium alloys be formed?

17. Which substances are used to produce hard metals?

18. What are the properties of hard metals?

19. Up to which temperature do hard metals remain stable to heat?

20. Why is only the cutting tip of cutting tools made of hard metal?

4. Corrosion

4.1. General Remarks

The surfaces of metals come into contact with the atmosphere. A chemical reaction takes place at the point of contact leading to gradual destruction of the metals. The rust covering products made of steel, verdigris on objects made of copper, brass and bronze, the deposit on aluminium, and the black tarnish an silver, are all typical examples of this chemical reaction.

Corrosion is the destruction of metals by chemical or electrochemical reactions.

Corrosion causes serious losses in the economy. About one third of the metals produced each year are destroyed by corrosion. In world−wide terms this means that millions of tons of metal are lost each year due to

corrosion.

This, however, is only the more immediate loss. The direct damage caused by corrosion is also a great problem. Considerable investments in terms of materials, work and time are required each year to replace water pipelines in the ground that have become destroyed by corrosion.

When interior parts of complicated chemical apparatus are destroyed it becomes necessary to close down the section of the plant concerned so that the corroded part can be exchanged. The corrosion of metals is the result of chemical or electrochemical reactions. Hence, corrosion is classified into two categories, namely chemical corrosion and electrochemical corrosion. The manners in which metals can be destroyed by chemical or electrochemical corrosion are shown in Table 4.1.

Table 4.1. Forms of corrosion

Uniform attack	Material cross−section is uniformly weakend. The resulting decrease of strength can be easily assessed.
Pitting corrosion	The material is so seriously weaked at individual points that it will no longer withstand stresses. Pitting corrosion is not always recognizable.
Intercrystalline corrosion	Corrosion proceeds along the grain boundaries. The bond of the crystallites is loosened, thereby diminishing overall strength. The damage is not always externally visible. This form of corrosion arises in alloys that do not have a uniform structure.

4.2. Chemical Corrosion

Metals are unaffected by dry air at room temperature. After a certain time, however, the metallic lustre of the surface becomes dull. The metal has become covered by a thin oxide skin. Corrosion is intensified when the temperature rises so that the dull skin on the metal grown more rapidly.

It is primarily the oxygen in the atmosphere that reacts with the surface of metals. The oxide skin on some metals prevents the further penetration of the oxygen so that it cannot get at the metal underneath. The underlying metal cannot be attacked by corrosion. Aluminium is a typical example where the oxide skin forms a dependable protection against further destruction (see Section 3.4.2.1.).

The oxide skin is not so dense on other metals, e.g. unalloyed steel. The skin is not dense since it contains innumerable pores through which gases and liquids gain access to the metal underneath, i.e. the process of corrosion is not stopped by the outer oxide skin. On the contrary, the layer becomes increasingly thicker, a process that is enhanced by high temperatures which accelerate corrosion.

A steel ingot has to be heated to between 1200 and 1300°C prior to forging and rolling. This high heat causes a thick outer layer of metal to bond with oxygen, thereby forming scale. With large, heavy steel ingots the scale layer can often reach a thickness of 10 mm. Thus, a single heating process can result in the loss of several hundred kilograms of high−quality steel.

Metals, however, are not only attacked by oxygen. The carbon monoxide and sulphur dioxide polluting the atmosphere in industrial areas can be equally aggressive.

Sulphur dioxide bonds with the surface of steel to form iron sulphate which is transformed into iron oxide and sulphuric acid by oxidation. The sulphuric acid continues this process on the basis of the newly formed iron sulphate.

Atmosphere oxygen and industrial waste gases cause chemical corrosion on metal surfaces. This process is accelerated with rising temperatures.

4.3. Electrochemical Corrosion

Two strips of differing metal (e.g. copper and zinc) are immersed in diluted acid, lye or salt solution. A wire is attached to each strip of metal and linked with the lead if an ammeter. The deflection of the meter needle will show that electrical current is flowing (fig. 4.1). A so–called galvanic element that generates electricity has been created. Chemical energy is converted into electrical energy. The less noble of the two metals is dissolved.

Electrochemical Series of Metals: This is a tabular arrangement of the metals in an order by which the immersion of two dissimilar metals from this series in an acid, lye or salt solution, causes the metal on the left–hand side of the series to take on the negative pole of a galvanic element, while the metal on the–right–hand side becomes the positive pole. The resulting potential increases the further apart the two dissimilar metals are in the electrochemical series. This series, also known as galvanic or potential series, has the following order:

– Mg, Al, Zn, Cr, Fe, Ni, Sn, Pb, Cu +

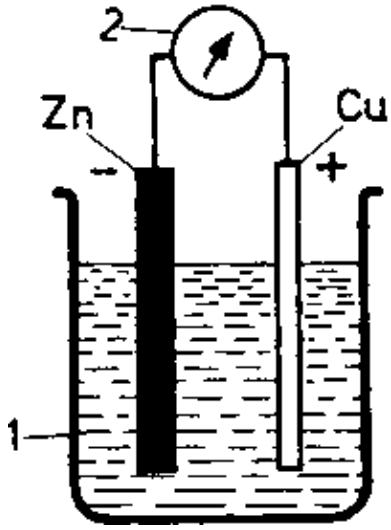

Fig. 4.1 The galvanic element

1 diluted lye (acid or salt solution); 2 ammeter

A short–circuited galvanic element is created when two dissimilar metals come into contact with each other and when diluted acid, lye or salt solution is added.

Diluted acids, lyes and salt solutions conduct electrical current. Liquids that conduct electrical current are known as electrolytes.

In practice, a galvanic element is often created unintentionally (figs. 4.2 to 4.6). Water or even a moist deposit can act as an electrolyte because water nearly always contains small quantities of dissolved salt.

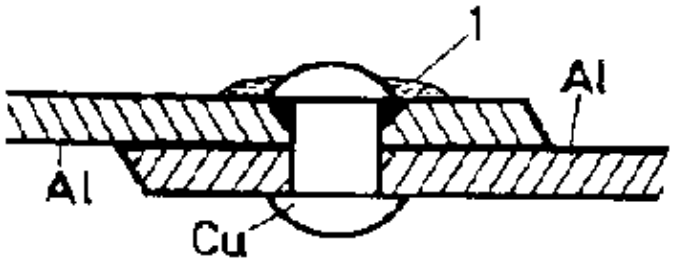

Fig. 4.2. Aluminium plates joined with copper rivet

1 rain water

Aluminium, copper and rain water form a galvanic element. Aluminium is dissolved because it stands to the left of copper within the electrochemical series of metals

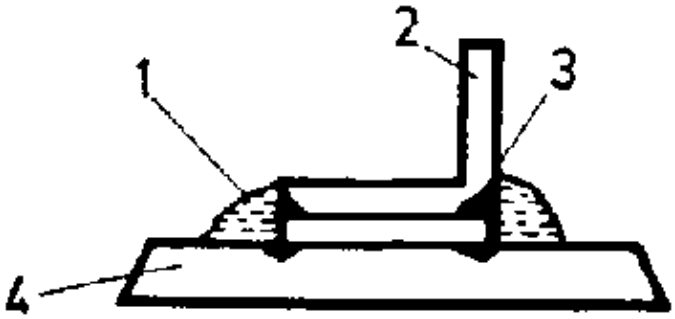

Fig. 4.3.

Steel plate and steel angle joined by tin solder 1 rain water; 2 steel angle (Fe); 3 tin solder; 4 steel plate (Fe). The steel parts are dissolved because steel (Fe) stands to the left of tin in the electrochemical series of metals

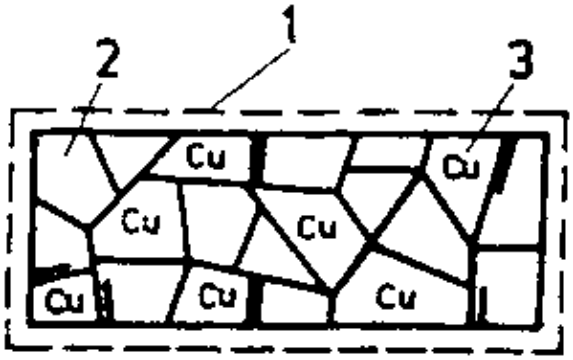

Fig. 4.4. Copper crystals in the structure of an aluminium alloy

1 electrolyte; 2 aluminium crystals; 3 copper crystals. The aluminium crystals dissolve at the points of contact between the aluminium and copper crystals due to the action of inter−crystalline corrosion

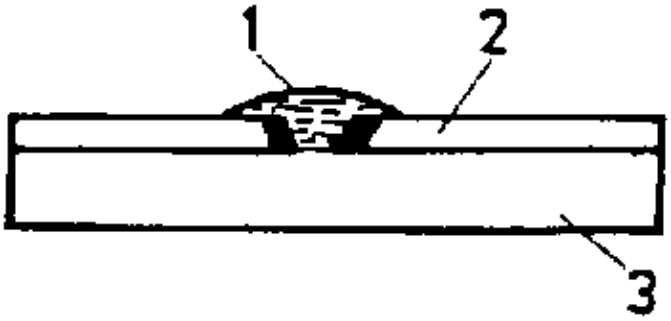

Fig. 4.5 Crack in the coating metal of galvanized steel sheet

1 electrolyte; 2 zinc coating; 3 steel sheet Since zinc stands to the left of steel (Fe) within the electrochemical series of metals the zinc coating is dissolved. That is why a zinc deposit is a

good protective coating for steel sheet

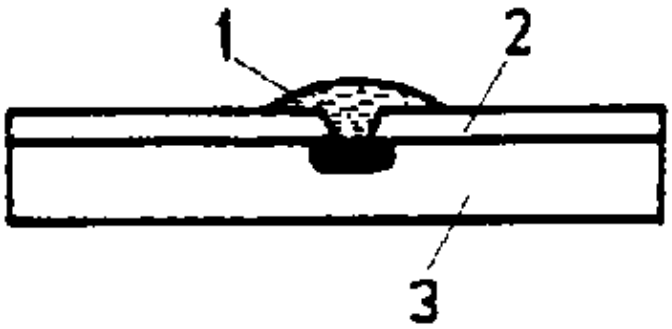

Fig. 4.6. Crack in the coating metal of tin plate

1 electrolyte; 2 tin coating; 3 steel sheet Since steel (Fe) stands to the left of tin within the electrochemical series of metals rust is formed at the point of the crack

For instance, if copper and iron are joined there will be no problem provided that a coating of paint seals off the joint so that moisture has no access to this point. But as soon as cracks appear in the paint coat moisture will be able to penetrate, and thereby gain access to the two dissimilar metals, causing electrolytic corrosion. Since iron (steel) is to the left of copper in the order of the electrochemical series it will be the iron (steel) that is decomposed.

4.4. Corrosion Protective Coatings

4.4.1. Metallic Coatings

Metals and their alloys are protected against corrosion by the application of a protective coating.

Metallic coatings protect metals against oxygen, water, weak, acids and lyes.

Dip Coatings

The cleaned workpiece is dipped into the molten coating metal. After it has acquired the temperature of the molten metal it is taken out. Zinc, tin and lead are such coating metals.

Galvanic Coatings

Galvanic coatings are metal layers that are deposited on the surface of metallic workpieces with the help of electrical current. Such a process is known as galvanizing.

The workpiece is thoroughly cleaned and all traces of grease are removed. The workpiece is then immersed in a watery salt solution. The salt contains the metal that is to be deposited. Thus zinc sulphate is applied for zinc plating (coating), copper sulphate for copper plating, and nickel chloride for nickel plating.

A plate consisting of the coating metal is suspended in the salt solution opposite to the workpiece that is to be coated.

Workpiece and metal plate are now connected to a direct voltage source that usually has a potential of only a few volts (fig. 4.7). The workpiece is linked to the negative pole of the voltage source and the metal plate to the positive pole.

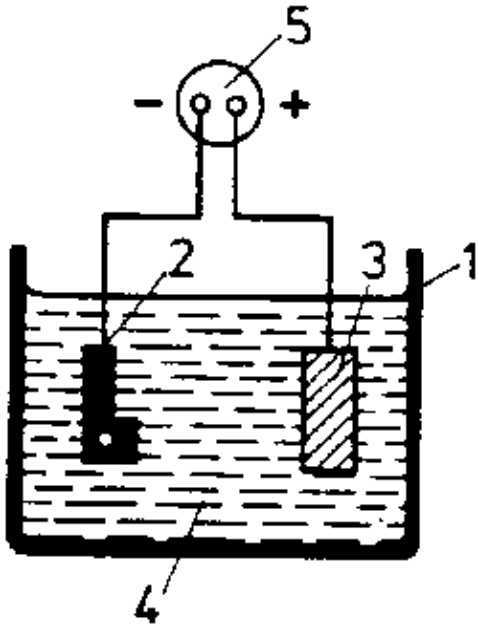

Fig. 4.7. Schematic representation of a galvanizing plant

1 vessel made of glass or ceramics; 2 workpiece; 3 plate of coating metal; 4 solution of the salt of the coating metal; 5 d.c. voltage source

Charged metal particles are released into the salt solution from the metal plate that is linked to the positive pole. These particles migrate with the electrical current to the workpiece that is linked to the negative pole. The metal particles are thus deposited on the workpiece, produce a uniform and dense coating.

Typical coating metals are chromium, nickel, copper, cadmium, zinc, tin, lead and silver.

Sprayed Metal Coatings

A wire composed of the coating metal is heated at the tip of a gas burner by the heat of the gas flame. The compressed air emitted by a special nozzle in the gas burner disintegrates the molten metal into fine particles that are hurled with a high velocity on to the surface of the workpiece that is to be coated (fig. 4.8).

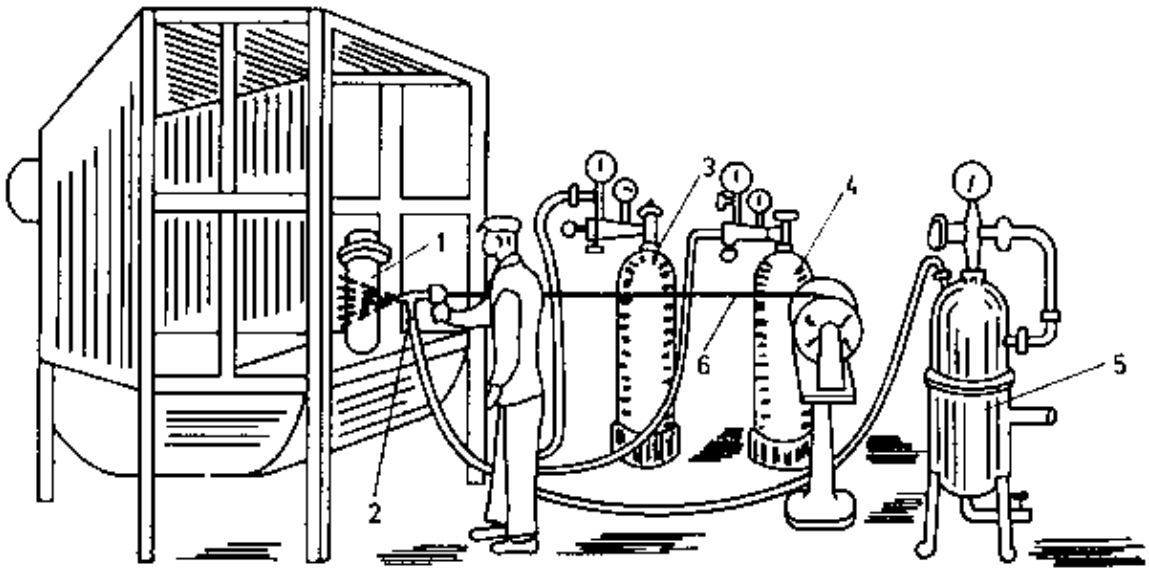

Fig. 4.8 Metal coating by spraying

1 workpiece;
2 spraygun;
3 oxygen cylinder;
4 fuel gas cylinder;
5 compressed–air container;
6 wire made of the coating metal

Thick coatings of lead, zinc, aluminium and copper can be deposited on steel surfaces by this spraying process.

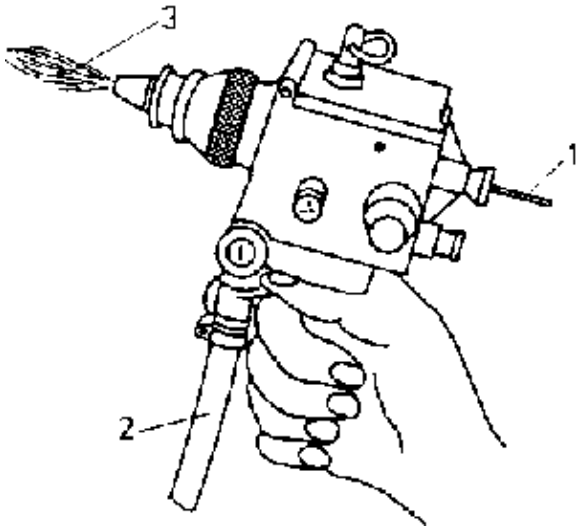

Fig. 4.9. Spray gun

1 coating metal;
2 oxygen supply; fuel gas and compressed air;
3 disintegrated molten metal

Roll Coating

Sheets of the coating metal are heated to a pasty consistency, together with steel sheet, and are then rolled together in a rolling mill. The two metals become firmly fused together.

Typical roll coating metals for steel are aluminium, nickel, copper, brass and chromium–nickel steel.

4.4.2. Oxide and Phosphate Coating

The oxide and phosphates of certain metals provide moderate protection against corrosion. Such coatings are applied by electrolytic or chemical processes.

Anodizing

The tin and dense oxide film formed on aluminium and aluminium alloys by exposure to the atmosphere is electrolytically intensified by this process (see Section 3.4.2.1.).

Phosphatizing

Workpieces made of steel are immersed in a phosphoric acid solution together with phosphates. A phosphate coating is deposited on the surface of the steel to form an anti–corrosive film and a good base for firm adhesion of paints.

4.4.3. Enamelling

A watery pasty mixture of quartz, feldspar, clay, metal oxides and borax are coated on the cleaned workpiece which is then placed in an annealing furnace where it is fired at a temperature of about 900°C. The pasty mixture melts at this temperature, forming a firm glass–like protective coating on the workpiece. This coating is known as enamel.

Enamel is resistant to water, the atmosphere and to nearly all chemicals. But it is very sensitive to knocks and sudden temperature changes.

4.4.4. Paint Coating

A good anti–corrosion coating can be obtained by applying three coatings of suitable paints. The first coating is an anti–corrosive primer. It consists of a mixture of boiled linseed oil and a pigment (lead oxide, zinc carbonate, iron oxide). The primer adheres firmly to the steel base, but it is not resistant to weathering. The second coating protects the anti–corrosive primer from weathering. The third coating is the finishing coating which gives the entire paintwork a harder surface (next to attractive appearance).

Exercises and Questions

1. What is corrosion?

2. Which forms of corrosion do you know?

3. Under which conditions will electrochemical corrosion arise?

4. What is an electrolyte?

5. How are galvanic metal coatings deposited on metallic workpieces?

6. What measures can be taken to prevent corrosion?

5. Plastics

5.1. General Remarks

For a long time natural raw materials were used exclusively for production processes. These raw materials, however, are not uniformly distributed in the world and resources are limited.

In our modern age, the chemical industry is in a position to replace or substitute natural raw materials by new 'man–made' ones. These are supplied to industry in the form of a comprehensive assortment of plastic materials of varying properties.

Thus, modern airplanes used in civil aviation contain an estimated 100,000 components made of plastics. This example clearly demonstrates the immense importance of plastics, in modern engineering. The current output of plastics in the world is about 1 ½ times the total production volume of non–ferrous metals.

Plastics are chemical compounds that belong to the field of organic chemistry. They consist of very large molecules formed from the merger of several identical single modules. The properties of these large molecules, or macromolecules as they are known, differ from those of the simple single molecule.

The linkage of the individual molecules into a macromolecule can be compared with a chain where its individual links form a long chain.

Characteristic properties that apply generally to plastics, are low density, good insulators to electricity and heat, corrosion resistant to atmospheric influences and chemicals, and readily formable.

5.2. Organic Chemistry

5.2.1. Chain and Ring Compounds

Living organisms create many chemical compounds from only a few elements, primarily carbon, oxygen, hydrogen and nitrogen. Hence, different sugars, starches, proteins, hormones and vitamins are built up in animal and plant bodies. The branch of chemical sciences that is concerned with the study of these 'organic' substances is known as organic chemistry.

In former times one believed that these organic compounds were formed by some mysterious 'life–force' of living beings. Nowadays, we are in a position to produce most of these organic substances synthetically.

Since all organic compounds contain carbon, all carbon compounds are now allocated to organic chemistry. An exception is formed by the oxides of carbon, i.e. by carbon dioxide and carbonat. The carbon atoms contained in the molecules of organic compounds bond together in the form of a chain or a ring. This characteristic property of carbon atoms makes it possible to produce a vast number of different chemical compounds from only a few elements. Some 300,000 carbon compounds are currently known.

The following section indicates the great diversity of organic compounds that can be produced from the three elements carbon, hydrogen and oxygen.

Carbon atoms are always quadrivalent. Now if one were to imagine a chain–like link of these carbon atoms one would obtain three free combining powers at each end of the chain, and 2 combining powers for each of the other carbon atoms within the chain, which are available for saturation, e.g. by hydrogen.

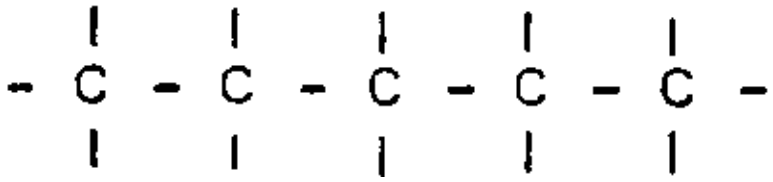

When all combining powers of such a straight chain are occupied by hydrogen atoms, i.e. satureated to the limit, then such a compound is known as a saturated hydrocarbon (paraffin).

Such carbon chains can also be present in a branched form.

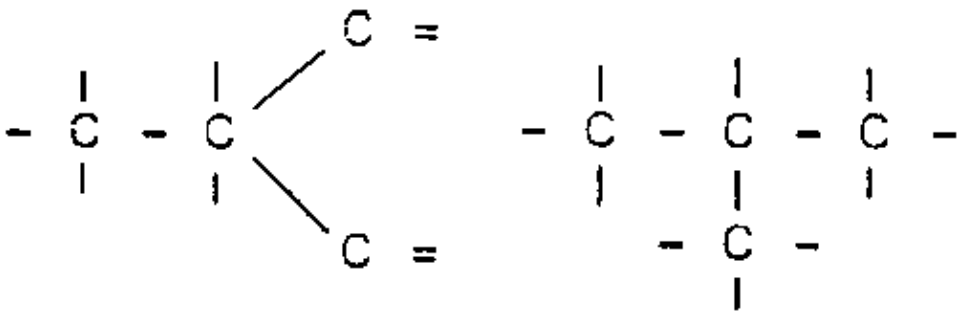

branched chains

<u>Examples of Saturated Hydrocarbons</u> (Table 5.1)

Table 5.1. Saturated Hydrocarbons

Formula	Name	Melting point °C	State at room temperature	Occurrence in
CH_4	methane	– 182		
C_2H_6	ethane	– 172	gaseous	illuminating gas
C_3H_8	propane	– 187		
C_4H_{10}	butane	– 135		
C_5H_{12}	pentane	– 129		

C_6H_{14}	hexane	– 95		
C_7H_{16}	heptane	– 90	liquid	petrol
C_8H_{18}	octane	– 57		
$C_{10}H_{22}$	decane	– 30		
$C_{12}H_{26}$	dodecane	– 10		petroleum
$C_{14}H_{30}$	tetradecane	+ 6	liquid	fuel oil
$C_{16}H_{34}$	Hexadecane	+ 18		lubricating oil
$C_{20}H_{42}$	eicosane	+ 36		
$C_{22}H_{66}$	dotriacontane	+ 70	solid	paraffins
$C_{60}H_{122}$	hexacontane	+ 99		

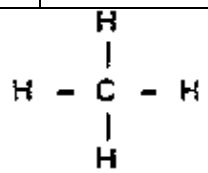

methane CH_4

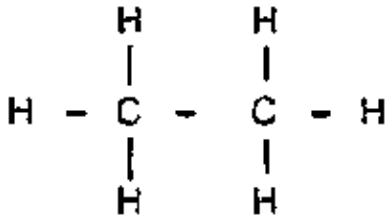

ethane C_2H_6

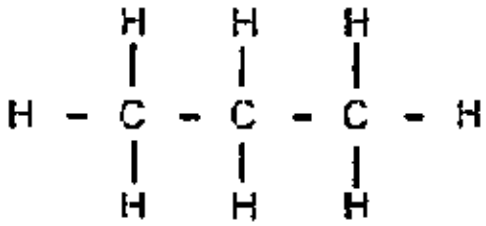

propane C_3H_8

Derivates of Saturated Hydrocarbons

The replacement of one or more hydrogen atoms of the saturated hydrocarbons by other elements or element groups leads to compounds which can be regarded as derivates of a hydrocarbon.

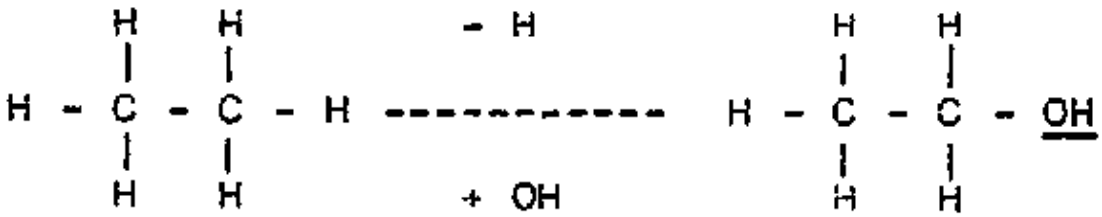

ethane

ethanol (spirit of wine)

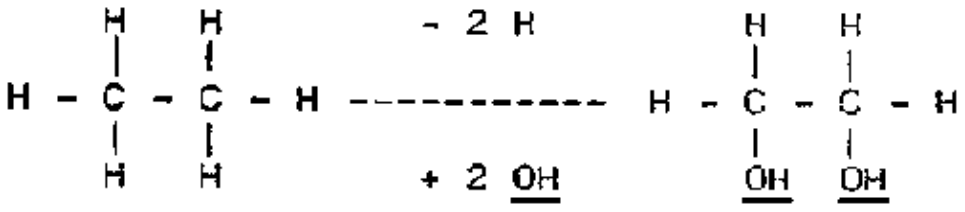

ethane glycol

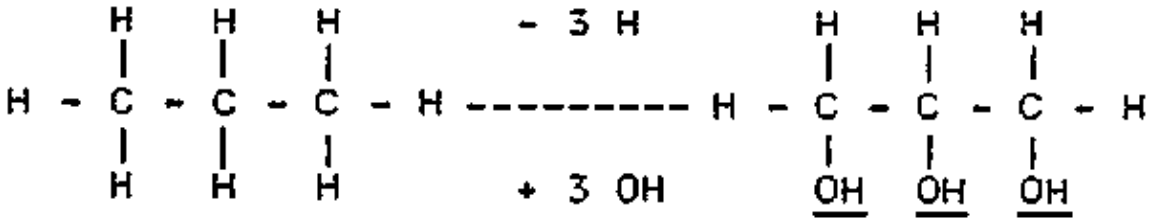

propane propanetriol (glycerin)

Ethanol: (spirits of spirit of wine) is produced by the fermentation of sugar. It forms an explosive gas mixture with the air and is used as a motor vehicle fuel. Ethanol is a good solvent for resins and liquid fats.

Propanetriol: (glycerin) is a colourless syrupy fluid of sweet taste. It is miscible with water in any proportion. It is derived from the saponification and cracking of fats. Glycerin is used for the production of stamping inks, shoe polish, ointment and soap.

The starting substance of ring compounds is benzene in which its C atoms form a six–link ring in which three double bonds arise.

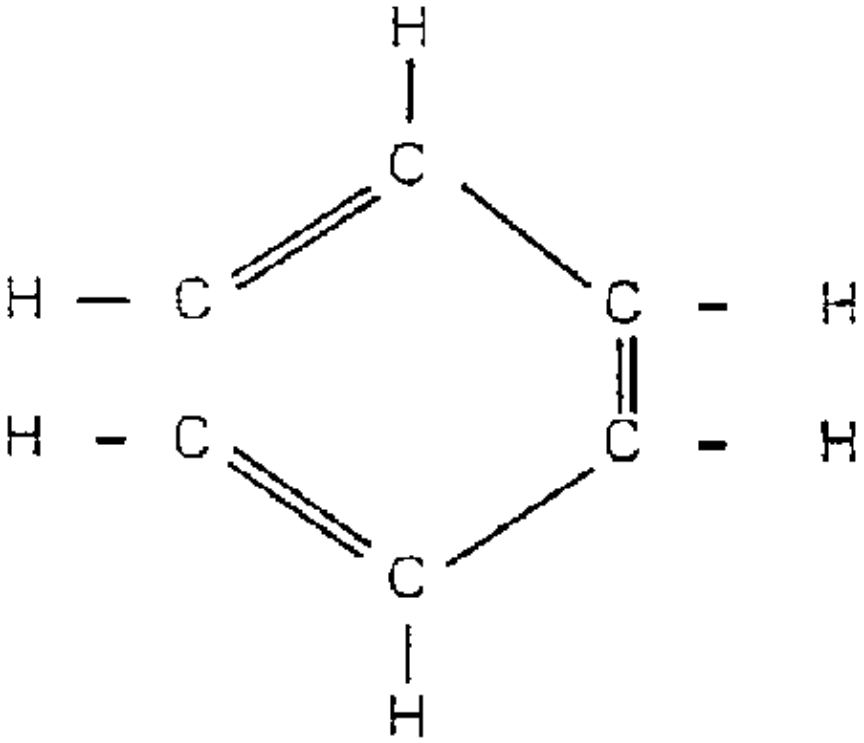

benzene

The formula for benzene is often represented in a simplified form by indicating the ring with lines:

Benzene: is a clear, colourless, flammable liquid of highly refractive nature. It is insoluble in water, but it dissolves fats, resins and rubber.

It is derived from coking gas and is used as a carburetor fuel. It is also the starting substance for a large number of ring compounds.

Phenol: is formed from benzene by replacing an H atom by the OH group

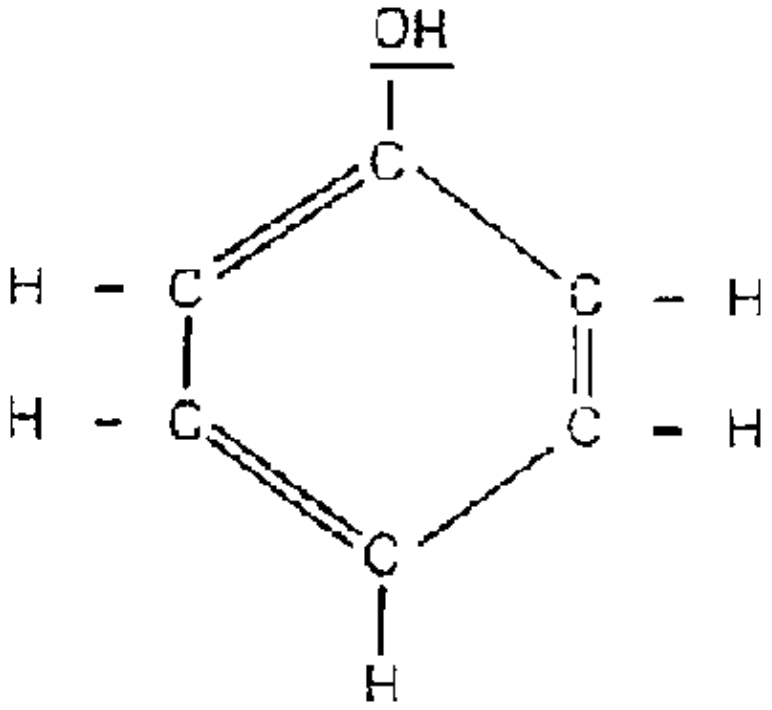

Phenol forms colourless crystals which turn red when exposed to light. Phenol is used for the production of salicylic acid, aspirin and for many dyestuffs and plastic materials.

5.2.2. Kinds of Reaction to Form Macromolecules

Chemical reactions leading to the formation of macromolecules are differentiated by polymerization, polycondensation and polyaddition.

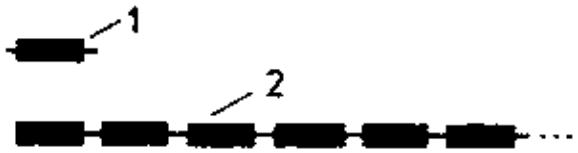

Fig. 5.1. Schematic representation of the polymerization process

1 single molecule;
2 macromolecule

Polymerization: is the combination of several molecules of identical size into a macromolecule (Fig. 5.1.).

Polycondensation: is the combination of several individual molecules of simple structure into a macromolecule, accompanied by the emergence of a small molecule, usually water (fig. 5.2).

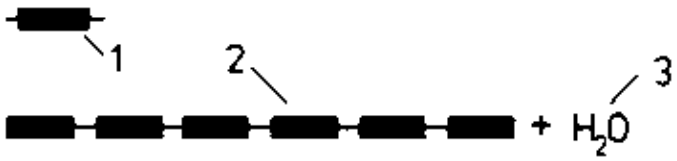

Fig. 5.2. Schematic representation of the polycondensation process

1 single molecule; 2 macromolecule; 3
3 water molecule

Polyaddition: is the reaction of identical or differing molecules by migration of hydrogen atoms to form a macromolecule (fig. 5.3).

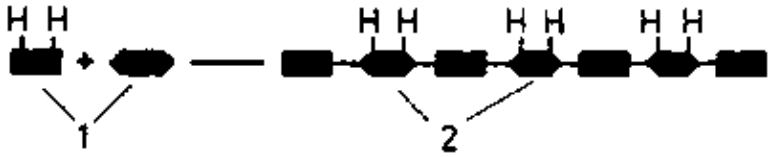

Fig. 5.3. Schematic representation of the polyaddition process

1 single molecule; 2 macromolecule

5.3. Classification of Plastics

Plastics are classified by the kind of chemical reaction that took place to form the macromolecule (see Section 5.2.2.), hence polymerizates, polycondensates and addition polymers.

Furthermore, a difference is made according to their behaviour when they are heated, hence thermosetting plastics and thermoplastics.

Thermosetting plastics are substances that can be heated any number of times and transformed into a plastic state. They retain their shape after cooling.

Thermoplastics remain plastic up to a certain stage of processing. After processing they become hard and insoluble.

Plastics are differentiated by the starting materials they are made of, i.e. natural and synthetic raw materials (table 5.2.).

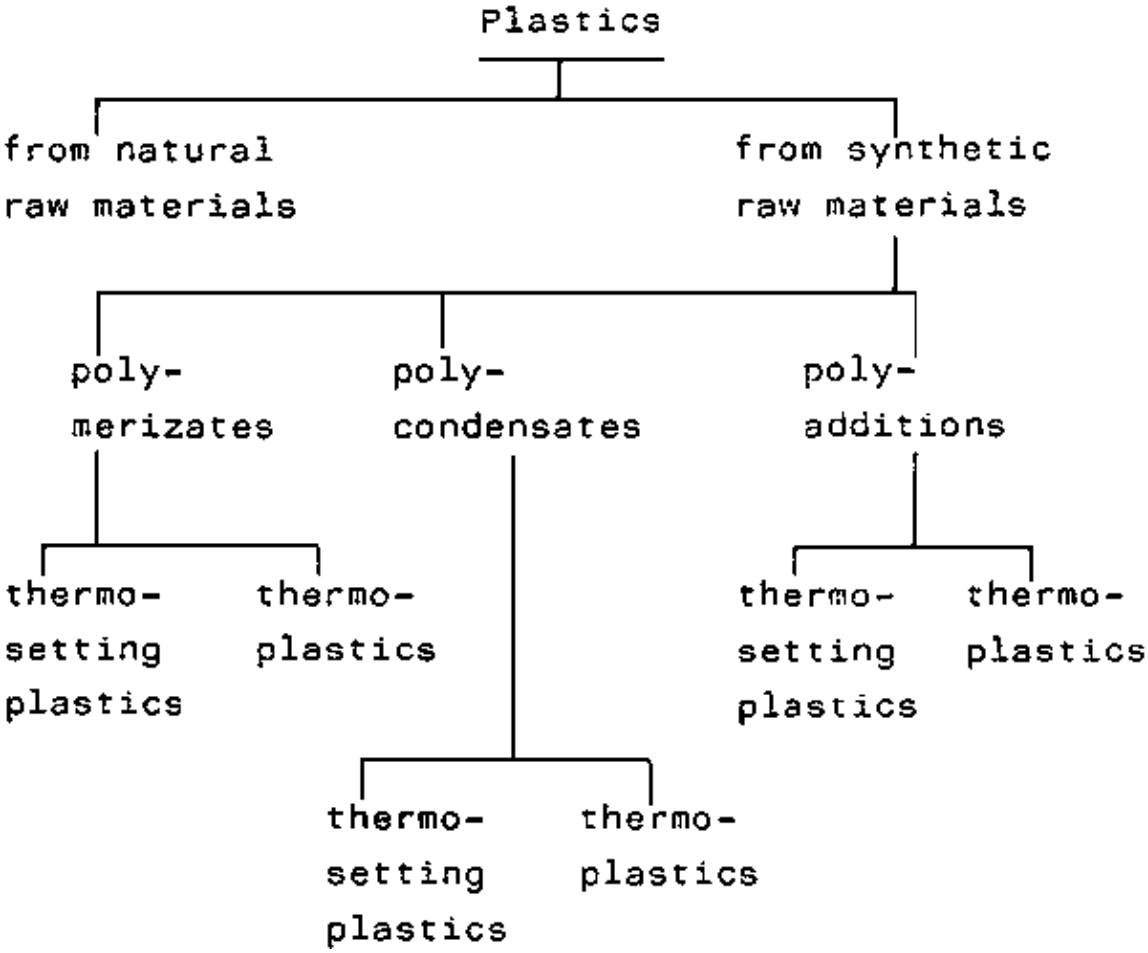

Table 5.2. Classification of plastics

5.4. Plastics Made of Natural Raw Materials

5.4.1. Cellulose Plastics

There are a variety of natural products that have macromolecules. They include cellulose, albumin and rubber. The macromolecules of these natural products can be chemically modified to produce plastic materials. Nowadays, such natural plastics have been all but entirely replaced by synthetic plastics. The only remaining natural – plastics of any significance are those based on cellulose.

Wood is pulped and treated with a sulphite lye to leach out the lignin from which cellulose is made.

Filtering paper and cellulose paper are made of cellulose containing very few impurities. Cellulose forms saline substances when it is treated with lyes of acids, and these can be plastically moulded (table 5.3).

5.4.1.1. Vulcanized Fibre

Derivation

Paper webs are soaked in a hot zinc chloride solution and then wound on drums. The mucous paper webs become fused together. The fused paper web is cut open to remove it from the drum. The resulting plates are soaked in water. The water dissolves the salt contained in the fused paper plates. The plates are dried, giving them their leather–like properties.

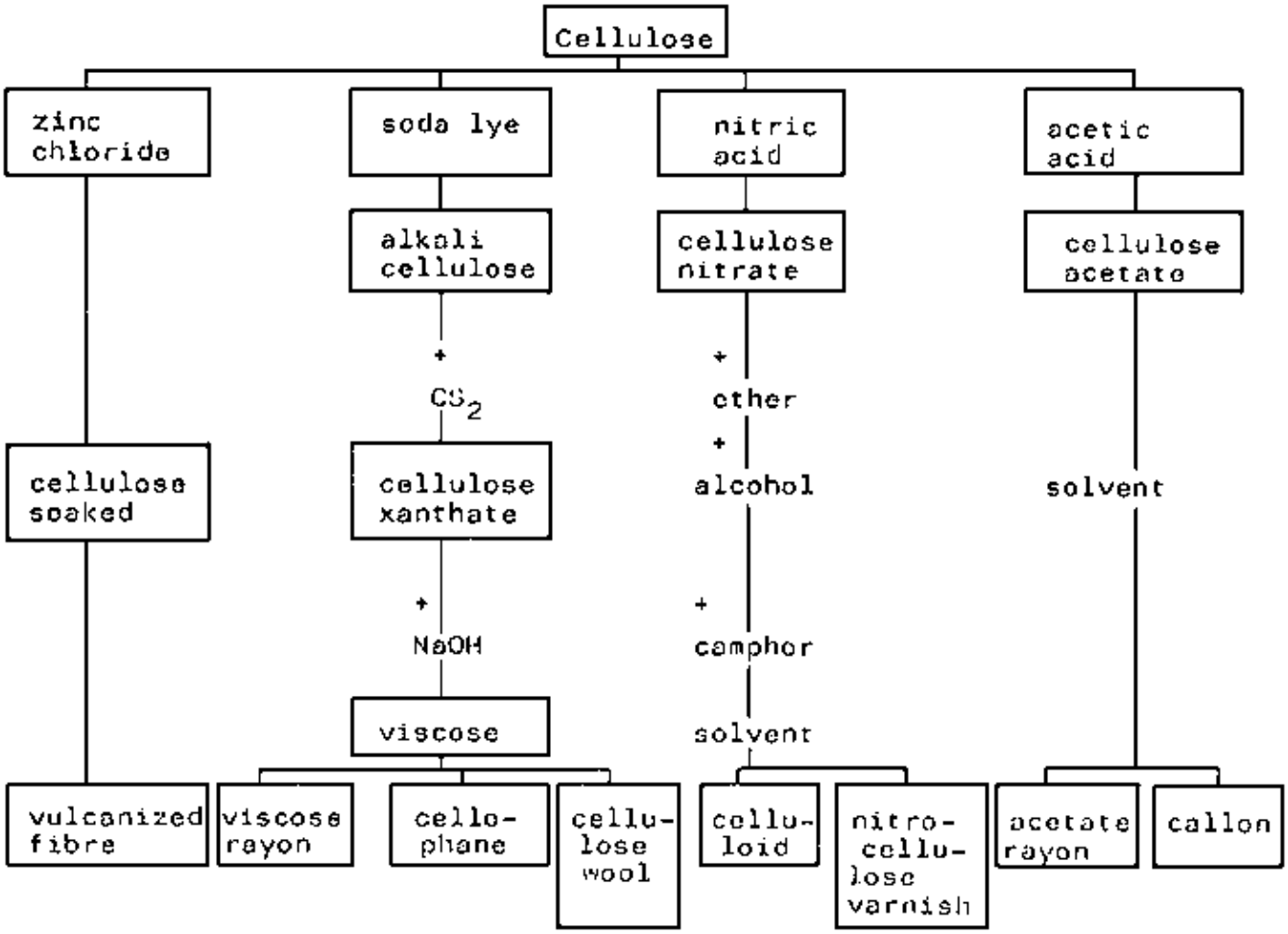

Table 5.3. Derivation of cellulose plastics

Properties:

Specific gravity:	1.3 g/cm^3
Temperature resistance:	90°C
Tensile strength:	50 to 100 MPa.

Vulcanized fibre is hard, tough, does not fragment, and is insensitive to oils and fats.

Technological Remarks

Vulcanized fibre can be processed by cutting, sawing, drilling, planing, turning, milling, grinding, and bending.

Plates can be joined by riveting and adhesive bonding.

Forms: plates, rods, pipes

Uses

Sealing rings and washers, clutch linings, brake linings and as artificial leather for the manufacture of suitcases.

5.4.1.2. Celluloid

Derivation

Cellulose is converted into cellulose nitrate by nitric acid. Camphor and alcohol are added to produce a horn–like material which is known as celluloid.

Properties

Specific gravity:	1.4 g/cm^3
Temperature resistance:	50°C
Tensile strength:	50 MPa

Celluloid is a thermoplastic transparent material, but it can be dyed to obtain any colour effect. It is insoluble in petrol, petroleum and mineral oil. It is dissolved by a mixture of alcohol and ether. I yellows when exposed to light. It is stable to water, salts and diluted acids. Celluloid is easily flammable and burns violently, producing combustion gases that smell of camphor.

Technological Remarks

Celluloid can be machined, and it can be formed at a temperature of 90°C. Celluloid is usually joined by adhesive bonding.

Uses

For the manufacture of toys, combs and brushes, buttons and buckles.

5.4.1.3. Cellulose Acetate

Derivation

Cellulose is treated with acetic acid to obtain cellulose triacetate. This substance, however, is not thermoplastic. The substance is dissolved by suitable agents and processed into films by pouring machines.

Properties

Specific gravity:	1.3 g/cm^3
Temperature resistance:	180°C
Tensile strength:	35 MPa

Cellulose acetate is transparent and is not destabilized (yellowing) by light. It has a higher temperature resistance than celluloid. It is difficult to ignite and is virtually unburnable.

Technological Remarks

Cellulose acetate can be machined. It is usually joined by adhesive bonding. It is also suitable for injection moulding (fig. 5.4).

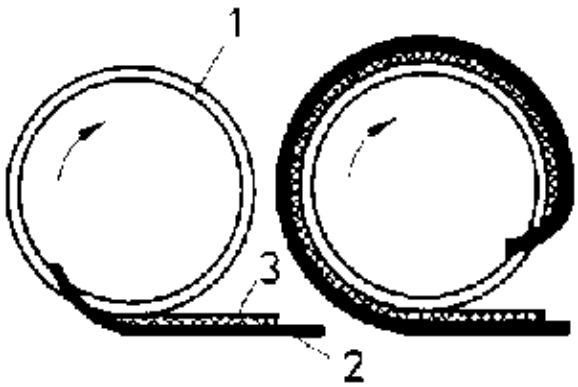

Fig. 5.4. Process for the production of pipes made of thermoplastic sheets

1 metal tube;
2 fabric;
3 heated thermoplastic plate

Uses

Cellulose acetate is used as the base for photographic materials (safety film), and is shaped into lampshades and spectacle frames.

5.5. Plastics Made of Synthetic Raw Materials

5.5.1. General Remark

Certain elements or groups of elements are extracted from limestone, water, air, coal and petroleum, and are bonded into raw materials having simple molecules. These raw materials are then converted into macromolecular plastics by polymerization, polycondensation and polyaddition.

5.5.2. Polymerizates

5.5.2.1. Polyvinyl Chloride (PVC)

Derivation

Gas acetylene is the raw material for the production of polyvinyl chloride. It is the sane gas that is used as fuel for gas welding. Hydrogen chloride (HCl) is added for the acetylene to form the simple vinyl chloride molecule. Under the action of catalysts at higher temperatures, many simple molecules of vinyl chloride bond into the

macromolecule polyvinyl chloride. PVC is currently the most widespread plastic material. A difference is made between hard and soft PVC.

PVC hard: a solid, light–brown substance

PVC soft: a soft rubber–like substance that can be produced in different colours. Certain substances, known as plasticizers, are added to polyvinyl chloride to make the plastic material pliable.

Properties

	PVC hard	PVC soft
Specific gravity:	1.4 g/cm^3	1.3 g/cm^3
Temperature resistance:	60°C	–
Tensile strength:	10 MPa	8 to 25 MPa

Hard PVC is resistant to nearly all chemicals at room temperature. It is dissolved by acids and lyes at temperatures exceeding 40°C.

The properties of soft PVC depend upon the kind and quantity of plasticizer added to it.

Technological Remarks

Hard PVC is supplied in plates. These are reduced to granules and heated so that this plastic material can be processed by injection moulding machines into extruded products such as pipes, profile rods and strips.

PVC is a thermoplastic material. After it has been heated to a temperature between 110 and 130°C it can be easily moulded into the required shape (fig. 5.4 to 5.7).

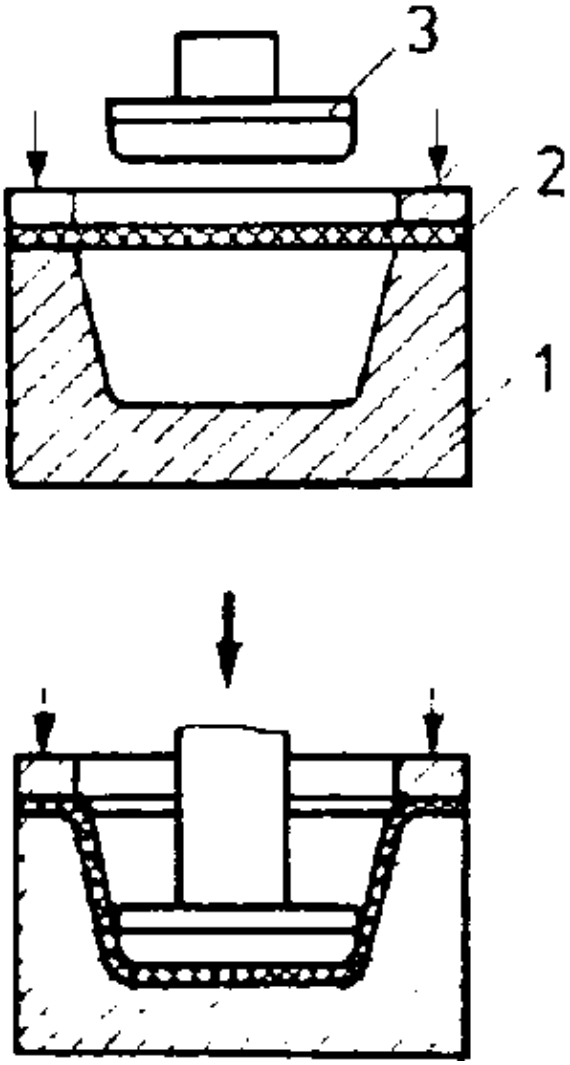

Fig. 5.5. Shapes of a container made of thermoplastic sheet with the help of a stamping die

1 mould;
2 thermoplastic sheet;
3 stamping die

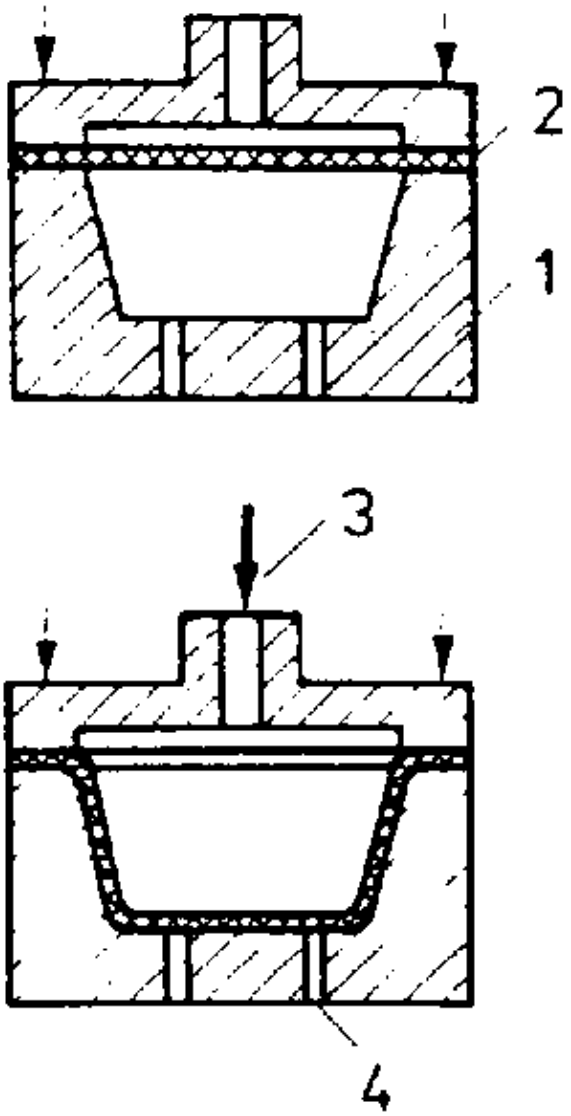

Fig. 5.6. Shapes of a container made of thermoplastic sheet with the help of compressed air

1 mould;
2 thermoplastic sheet;
3 compressed–air supply;
4 venting holes

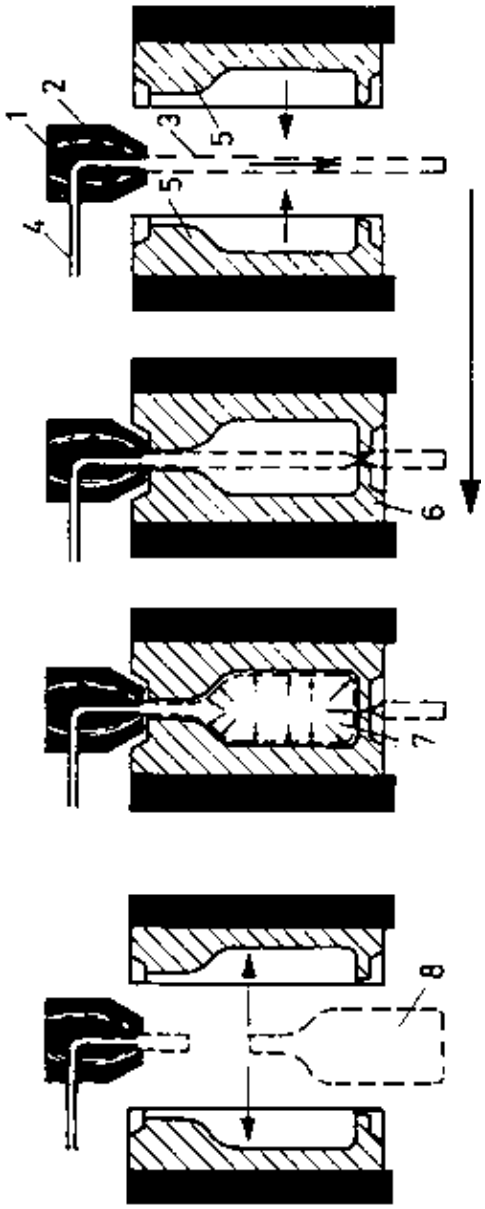

Fig. 5.7. Principle of producing bottles from thermoplastic hose

1 thermoplastic material;
2 heater;
3 thermoplastic hose;
4 compressed–air supply;
5 mould open;
6 mould closed;
7 compressed air presses the hose against the walls of the mould;
8 bottle drops out of the open mould

PVC can be heated by a gas flame, hot air, in electrically heated cabinets or by infrared rays. Dark discolouration and the formation of bubbles are an indication of overheating. After moulding it should be placed in water for cooling or wiped with a wet rag. Slow cooling has a detrimental effect on the properties of the material. For bending the zone that is heated should be at least four times the thickness of the plate. The smallest bending radius is at least twice as much as the thickness of the plate.

Hard PVC is suitable for machining. A good chip flow must be ensured when it is turned or drilled. Only compressed air (not water) should be used for cooling during machining operations.

Twist drills must have a point angle of 110 to 130°, and the cutting edges should be slightly dull to prevent tearing and shattering of the material.

Bandsaws, fine circular saws and hacksaws can be used for sawing.

Hard PVC is usually joined by adhesive bonding, A special adhesive solution is required for this purpose. The points that are to be joined are roughened with a file or glass paper. The adhesive bond sets fully in about 15 to 20 hours at room temperature.

Soft PVC can be processed on heated screw extruders to produce hoses or strips.

A mixture of PVC powder and plasticizers gels at 160°C. This mixture is filled into a casting mould which is then heated to 160°C. Shoe soles, bottle stoppers and handlebar grips for bicycles are made in this manner. Soft PVC is primarily parted by cutting and shearing.

Parts made of soft PVC are joined by adhesive bonding. A special solvent is employed for this purpose. Soft PVC parts can be also joined by welding (fig. 5.8).

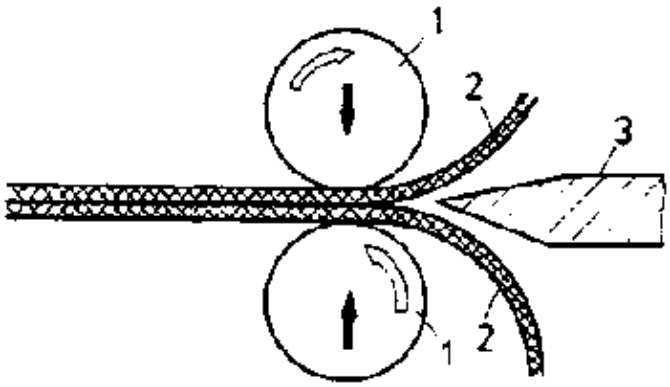

Fig. 5.8. The surfaces of contact of thermoplastic films are heated by the heating wedge and fused together by pressure

1 pressure rollers;
2 thermoplastic film;
3 heating wedge

Uses

Hard PVC is used as an insulant in electrical engineering, for the production of containers for chemicals, for water pipes and drainage pipes.

Soft PVC is suited for the manufacture of water hoses, shoe soles, protective work clothing in the chemical industry, handbags, and as insulating sheaths for power cables.

5.5.2.2. Polystrene

Derivation

Ethylene ($H_2C - CH_2$) and benzene (C_6H_6), both of them derived from coal or petroleum, are used to produce styrene. This, in turn, is polymerized to obtain polystyrene.

Properties

Specific gravity:	1.05 g/cm^3
Temperature resistance:	60 to 80°C
Tensile strength:	40 to 70 MPa

Polystyrene is a thermoplastic material. It is transparent, but it can be dyed in brilliant colours. It burns with a yellow, strongly sooting flame. It is not dissolved by lyes and acids (with the exception of nitric acid), alcohols, mineral oils and animal oils. Polystyrene is sensitive to petrol, benzene, acetone and terpentine.

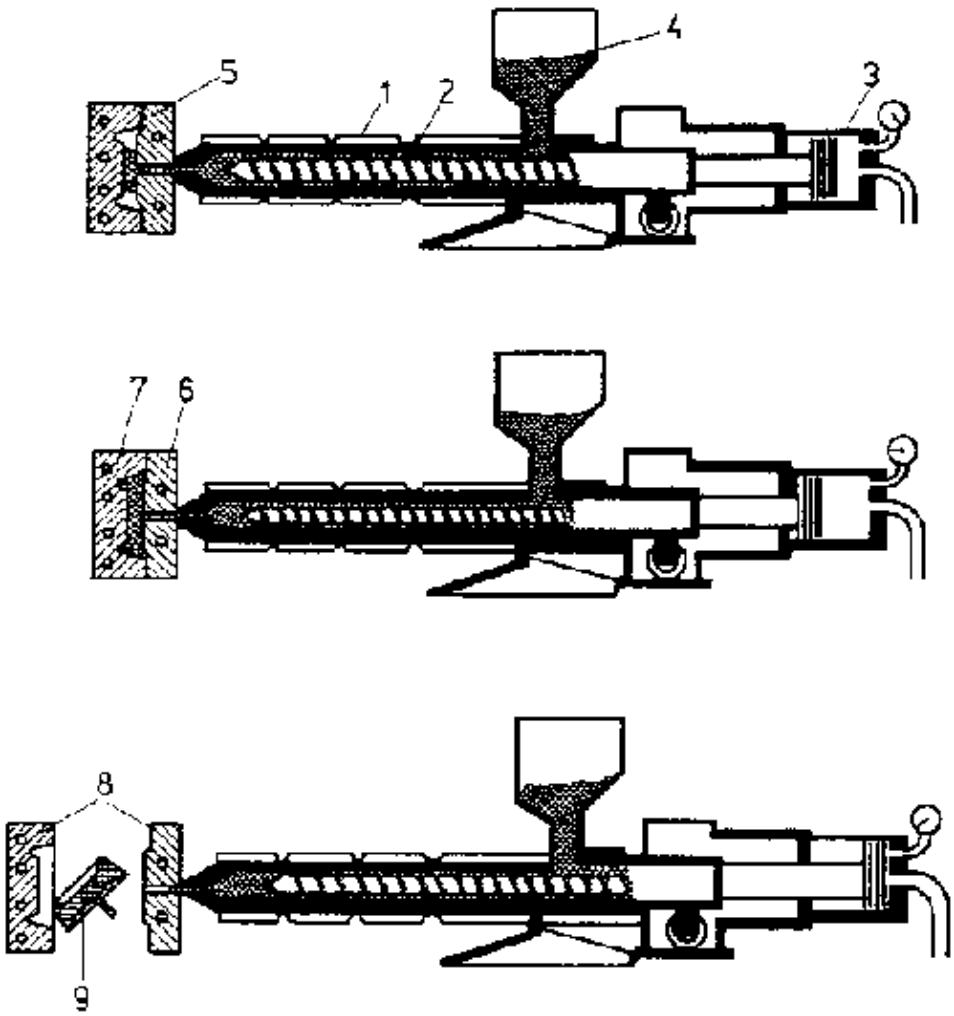

Fig. 5.9. Injection moulding of thermoplastics

1 electrically heated cylinder; 2 screw spindle; 3 hydraulic Cylinder; 4 thermoplastic granules; 5 mould; 6 mould filled; 7 cooling; 8 mould open; 9 finished part

Technological Remarks

Polystyrene is primarily processed on injection moulding machines (fig. 5.9), but it can be also machined.

It is formable at a temperature of 120°C. The surfaces of joints are slightly dissolved with benzene for adhesive bonding.

Uses

Mass−produced parts for electrical engineering, the fine−limit engineering and optical industries, tube caps, and insulating covers ('Styroflex') for cables.

5.5.2.3. Polyethylene (polythene)

Derivation

Gaseous acetylene ($H_2C = CH_2$), derived from coal or petroleum, is polymerized into a solid substance in the presence of oxygen at a pressure of 150 to 200 MPa and a temperature of 200°C.

Properties

Specific gravity: 0.92 g/cm^3

Temperature resistance: 80°C

Tensile strength: 10 MPa

Polythene is either a clear transparent or milky white material. It has not taste or smell and it has a waxy feel. It is resistant to acids, lyes and salt solutions. Exposure to the sun makes polyethylene brittle.

Polyethylene burns with a brilliant flame. The combustion gases smell like a paraffin candle that has just been extinguished.

Technological Remarks

Polyethylene is a thermoplastic material that is formable at temperatures between 110 and 130°C. The workpieces should be allowed to cool gradually after hot forming.

Parts made of polythene can be welded together. Suitable adhesives are not yet available.

Uses

Different kinds of bottles, dishes, pails and tubs are made of polyethylene. Pipes made of polyethylene are extensively used in the chemical industry because they are resistant to corrosion. Polyethylene is a high–grade insulating material that is employed on a large scale in power–current and high–frequency engineering.

5.5.3. Polycondensates

5.5.3.1. Phenolic Plastics

Derivation

Phenol and methanol form the raw materials for the manufacture of phenolic plastics.

Phenol is derived from hard–coal tar or natural gas. It crystalizes into white needles, or red to brown needles when exposed to light.

Methanol is a gas that is used as a watery solution for technical purposes. It is synthetically produced from carbon dioxide.

Phenol and methanol react with each other at a temperature of 100°C when soda lye is added. It forms a resin–like mass under the separation of water. This mass is known as phenolic resin. It is light yellow, brittle and dissolves in organic solvents. Condensation goes through three more or less distinct stages designated as A, 3 and C. The original phenolic resin mass is in its A–stage. At a temperature of 120°C it is transformed into its 3–stage in which it can no longer be dissolved, but it still becomes viscous when warmed. Phenolic resin is transformed to its final C–stage under pressure at temperatures between 140 and 170°C. It then becomes fully cured, or hardened, and cannot be melted again. It has become a thermosetting plastic.

The strength of pure phenolic resin is very low which is why it is seldom technically used in its pure state. Phenolic plastics are mainly used for the manufacture of moulding materials.

Moulding materials: Phenolic resin is ground to a powder in its A–stage. The powder as added as a filler (wood flour, stone flour, and shredded textiles and paper). The mixture is heated to a temperature of 120°C. The phenolic resin melts, thereby forming an intimate mix with the filler and simultaneously transforming it into its B–stage. The mixture is once again reduced to a powder to obtain the moulding material from which moulded parts (the final C–stage) are produced by compression moulding machines (fig. 5.10.).

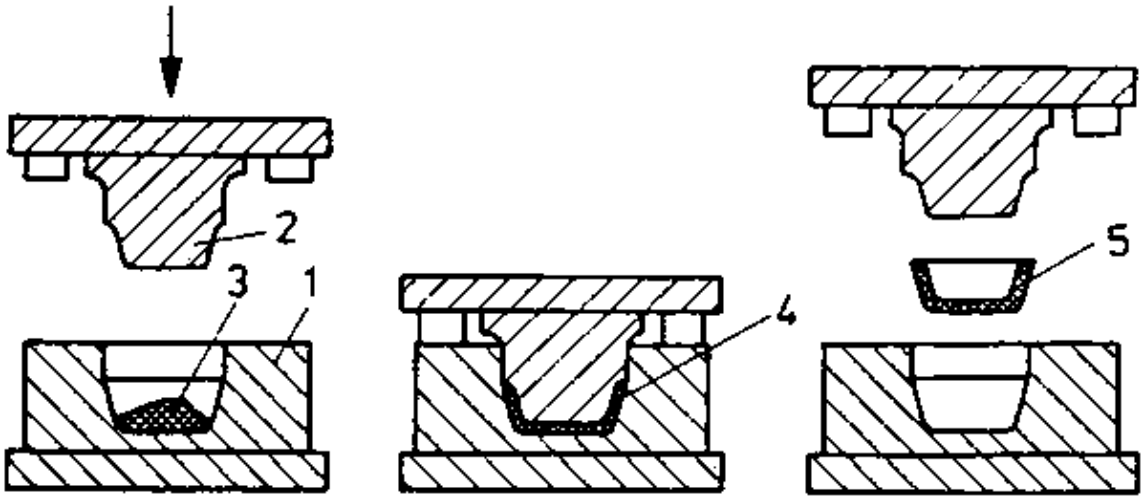

Fig. 5.10. Compression moulding

1 mould; 2 stamp; 3 moulding mass; 4 the mould is heated; the mass melts and becomes hard; finished moulded part

Laminated plastics: Paper or fabric webs are immersed in liquid phenolic resin that is in its A–stage. After drying, the webs are cut into sheets, piled on top of each other, and compressed at a pressure of about 4 MPa and a temperature of about 150°C (fig. 5.11).

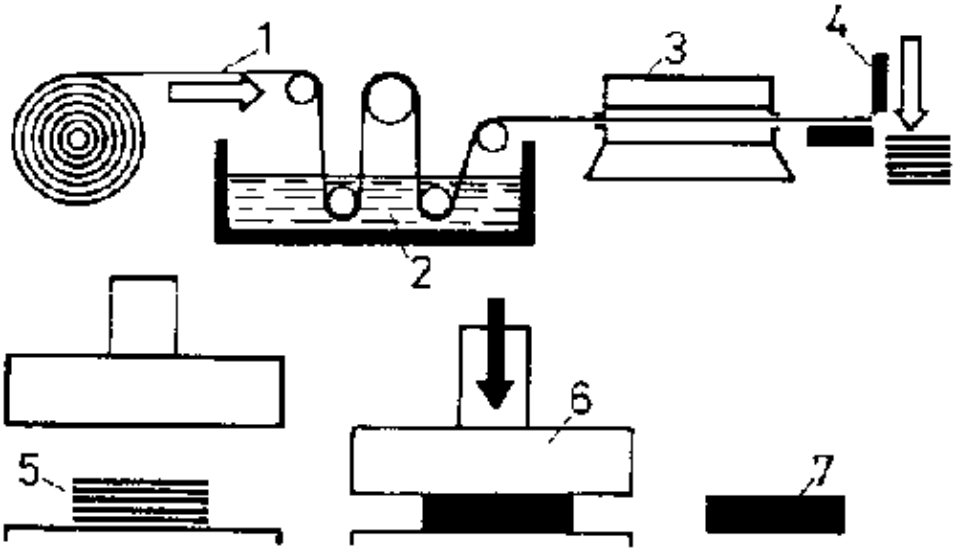

Fig. 5.11. Production of laminated plastics

1 paper or fabric webs; 2 phenolic resin solution; 3 drying installation; 4 shears; 5 non–impregnated layers; 6 pressing the impregnated layers; 7 laminated plastic material

Properties

– Moulded articles made of moulding material with wood flour as filler

Specific gravity:	1.4 g/cm^3
Dimensional stability:	130°C
Tensile strength:	25 MPa

– Laminated plastics based on paper webs

Density:	1.4 g/cm^3
Tensile strength:	40 MPa

– Laminated plastics based on fabric webs

Density:	1.4 g/cm^3
Tensile strength:	60 MPa

Moulded articles made of phenolic plastics are resistant to water, acids, lyes, spirits, acetone, ether and hydrocarbons. The articles are not stable to light, i.e. they darken. The taste of warm foods in phenolic plastics containers is detrimentally influenced.

Laminated plastics are resistant to diluted acids and lyes, and conditionally resistant to petrol, benzene, oils and alcohols. They are unstable towards strong acids and lyes.

Technological Remarks

Moulded articles: fillers increase the strength and elasticity of the material. Phenolic plastics can be easily machined with the same cutting tools as those used for light metals. Machining is conducted at high cutting speed and slow feeding rate.

Laminated plastics: The tensile strength differs with the direction of the fibres (longitudinal or traverse). The direction of lamination must be observed when the material is processed. There is a danger that laminated plastics will peel off or break off vertically in relation of the direction of lamination at the edges of the article.

Uses

Moulded articles made of phenolic plastics are mainly used in electrical engineering (casings, fuse boxes, switches, mains plugs).

Laminated Plastics are used for the production of components of electrical appliances. They ore also used as material for bearings, gearwheels, augers and rollers. Gearwheels made of laminated plastics do not give rise to any running noise. Laminated plastics are extensively used in shipbuilding for wall linings because they do not burn easily.

5.5.3.2. Amino Plastics

Derivation

Amino plastics are produced by polycondensation of urea compounds with methanol. Similar to the phenolic plastics, polycondensation proceeds in several stages.

Properties

Specific gravity:	1.5 g/cm^3
Dimensional stability:	100°C
Tensile strength:	25 MPa

Amino plastics are resistant to weak lyes, petrol, benzene and oils. They are unstable towards strong acids and lyes. Amino plastics are flame–resistant. If a sample is held in a flame it will become yellow. The resulting combustion gases smell like ammonia.

Amino plastics are absolutely light fast, and they do not influence the taste of foods.

Technological Remarks

Amino plastics are processed into moulding materials and laminated plastics in the same manner as phenolic plastics. Machining is also the same.

Uses

Amino plastics are used for the production of food containers, water taps, drinking cups, and various fittings for motor vehicles.

Exercises and Questions

1. What are plastics?

2. Which chemical compounds belong to organic chemistry?

3. Which property of carbon atoms is exploited to produce a large number of chemical compounds from a few elements?

4. What are saturated hydrocarbons?

5. What is the name of the simplest ring carbon compound?

6. Explain the terms polymerization and poly–condensation.

7. What are macromolecules?

8. How do thermosetting plastics and thermoplastics differ in their properties?

9. Which plastics can be made of cellulose?

10. Give examples of application of vulcanized fibre.

11. What is the difference between hard and soft PVC?

12. Describe the procedure of moulding thermoplastics.

13. What has to be observed when machining hard PVC?

14. Give examples of application of hard PVC.

15. How can you recognize polyethylene?

16. Why is polyethylene used for pipes in the chemical industry?

17. What are moulding materials and how are they processed?

18. How are laminated plastics produced?

19. Why are containers made of phenolic plastics unsuitable for warm foods?

20. What is the purpose of fillers in moulding materials?

21. Name articles that are made of phenolic plastics.

22. What are amino plastics?

23. What are amino plastics used for?

24. How can you differentiate between amino plastics and phenolic plastics?

6. Lubricants and Coolants

6.1. Lubricants

6.1.1. Effects of Lubricants

Lubricants serve the purpose of diminishing the friction of sliding motions. The amount of friction created when two surfaces slide upon each other depends upon the conditions of the surfaces. The rougher the surfaces, the higher the friction (fig. 6.1).

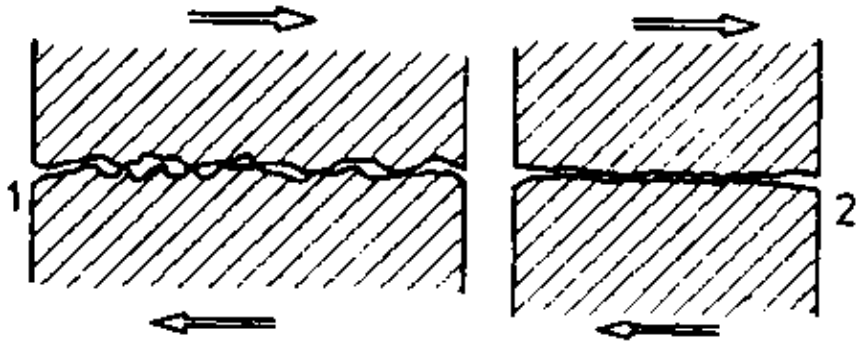

Fig. 6.1. Schematic representation of two parts sliding upon each other

The amount of friction depends upon the condition (degree of smoothness) of the surfaces which slide upon each other

1 rough surface – high friction;
2 smooth surface – little friction

A microscope will reveal that even apparently smooth surfaces are still somewhat rough.

The lubricant forms a film between the surfaces. The film has to be sufficiently thick to cover all surface irregularities, i.e. the actual surfaces no longer come into contact with each other. Friction then takes place within the lubricating film. In other words the two carts 'are floating upon each other' (fig. 6.2).

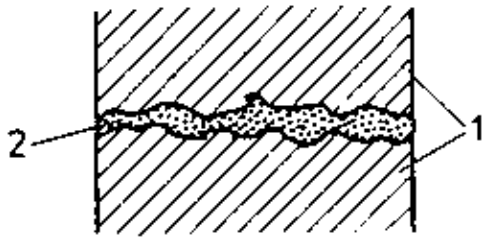

Fig. 6.2. Schematic representation of two parts sliding upon each other with a film of oil between them

1 metal parts;
2 film of oil

Mobile oils have a very low internal friction level, but their disadvantage is that they are easily squeezed out of the area between the two sliding surfaces. The film of oil becomes too thin so that the surfaces once again come into contact with each other.

Mobile lubricating oils are used for low pressures, whereas viscous lubricating oils are used for high pressures.

6.1.2. Characteristics and Types of Lubricants

Viscosity: This defines the toughness of internal friction of a lubricant. The viscosity of mobile oils is lower than that of viscous oils. Viscosity diminishes with increasing temperature.

Point of solidification: This is the point at which oil no longer flows on account of excessive viscosity.

Drip point: This is the temperature at which a grease will drip out of a standardized aperture of a glass tube.

Flash point: This is the temperature at which a substance starts to develop combustible gases.

Table 6.1. Kinds of lubricants

Kind	Origin	Properties	Uses
Mineral oils	Distilled from petroleum and then refined.	Does not resinify. Flash point: 140 to 250°C. Boiling point: 300 to 400°C	Bearings for motors, dynamos, motor vehicles, centrifuges, lathes, etc.
Mineral greases	Mixture of mineral oil and thickeners, e.g. sodium soap or lime soap.	Flash and solidification points are higher than mineral oils. Drip point with cold saponification: 100°C; with soda saponificatied fats: about 180°C	For sliding and anti–friction bearings, as long–life lubricants; requires less packing than oil extra dust protection.
Plant oils and fats	Pressed out of plants or extracted with solvents.	Unstable at higher temperatures; resinifies in the atmosphere; not always free of acids.	Castor oil for racing cars; nowadays mostly replaced by cheaper grades of mineral oil.
Animal oils and fats	Melted out of animal tissues and bones or extracted with solvents.	As plant oils	Bone oil for precision mechanical instruments.
Graphite lubricants	Homogeneous distribution of graphite in oil, grease and water.	Deposits in the finest cavities and smoothens the surface. Also for high temperatures; anti–seizure properties.	Compressors and hot–steam engines.

6.2. Coolants

Coolants are fluid substance used in metal working to reduce the friction between tool and workpiece and to dissipate undesirable heat in tools and workpieces.

Coolants

Watery solution of soda, potassium chromate or sodium nitrate	Mineral oils (cutting oils)	Mineral oil emulsions
The salts diminish the surface tension of water. Good cooling effect; the salts inhibit rust.	Mobile oils containing sulphuric, chlorine and phosphoric compounds to increase the compressive strength of the lubricating film. Their lubricating action is their principal purpose.	Oil distributed in finest droplets in water to form a milky emulsion. Emulsifiable oils consist of a solution of emulsifiers in mineral oil. Good cooling and lubricating action.

Table 6.2. Kinds of coolants

Table 6.3. Use of lubricants and coolants in machining operations

Machining operation	Steel	Copper and Cu alloys	Aluminium and Al alloys	Magnesium and Mg alloys
Turning Roughing	Mineral oil emulsion	Dry; mineral oil emulsion; mineral oil	Dry; mineral oil emulsion	Dry; 4 % sodium fluoride solution
Finishing	Mineral oil; mineral oil emulsion	Dry; mineral oil; mineral oil emulsion	Dry; petroleum	Dry; 4 % sodium fluoride solution
Drilling Boring	Mineral oil emulsion	Dry; mineral oil emulsion	Petroleum	Dry; 4 % sodium fluoride solution
Thread Cutting	Mineral oil	Mineral oil	Petroleum	Dry; 4 % sodium fluoride solution

Reaming	Mineral oil; mineral oil emulsion	Mineral oil; mineral oil emulsion	Petroleum	Dry; petroleum with mineral oil
Grinding	Potassium chromate solution; diluted mineral oil emulsion	Diluted mineral oil emulsion	Petroleum	4 % sodium fluoride solution
Milling Roughing and finishing	Mineral oil emulsion	Mineral oil emulsion	Mineral oil emulsion	Dry; 4 % sodium fluoride solution