Business Transaction Broker
for z/OS

System Administration Guide

Version 1 Release 0

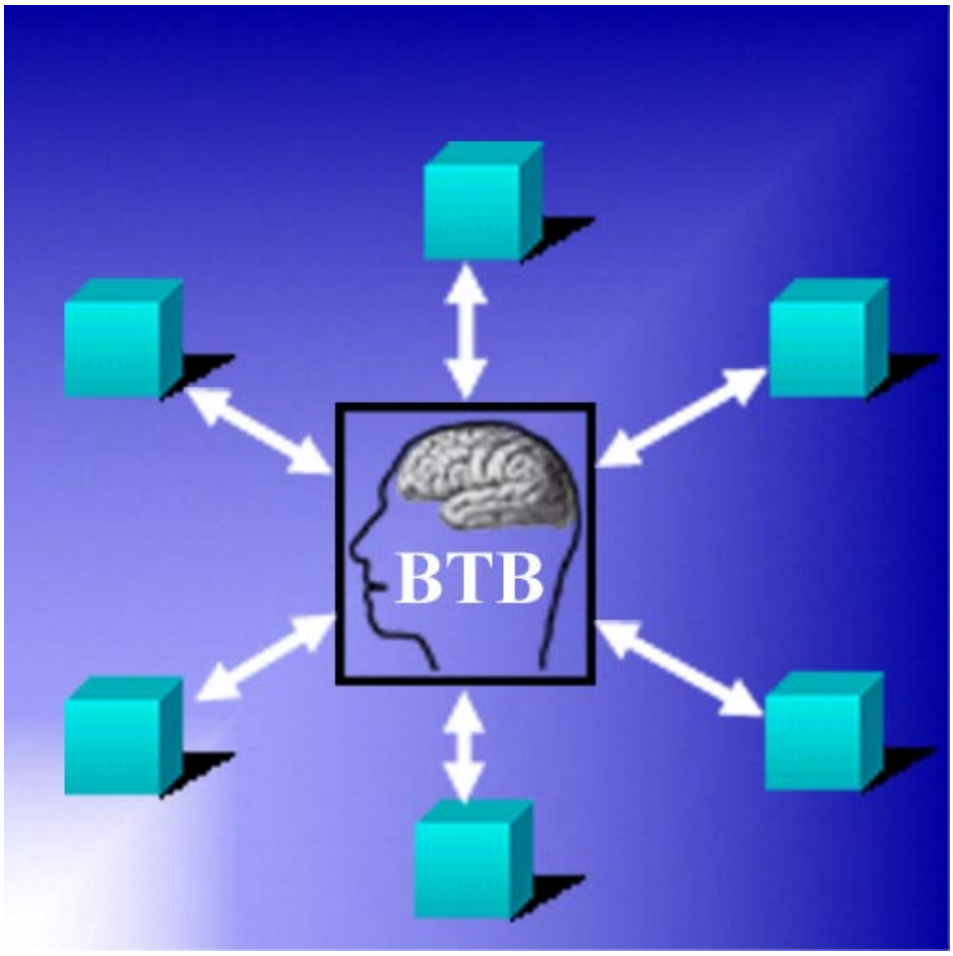

SC27-1582-01

Business Transaction Broker
for z/OS

System Administration Guide

Version 1 Release 0

SC27-1582-01

Note!

Before using this information and the product it supports, be sure to read the general information under “Notices” on page xi.

Second Edition (September 2002)

This edition applies to Version 1, Release 0 of Business Transaction Broker for z/OS (product number 5799-GPR) and to all subsequent versions, releases, and modifications until otherwise indicated in new editions. Make sure you are using the correct edition for the level of the product.

Download publications via internet at the following address:

`http://www.ibm.com/software/ad/imb`

Publications are not stocked at the address below.

Please address your comments to:

IBM Global Services
Sortemosevej 21
DK-3450 Alleroed
Denmark

☏ + (45) 45 23 30 00
Fax + (45) 45 23 68 01
E-mail SPOC@dk.ibm.com

When you send information to IBM, you grant IBM a nonexclusive right to use or distribute the information in any way it believes appropriate without incurring any obligation to you.

© **Copyright International Business Machines Corporation 1992, 2002. All rights reserved.**
US Government Users Restricted Rights – Use, duplication or disclosure restricted by GSA ADP Schedule Contract with IBM Corp.

Contents

Figures vii

Tables ix

Notices xi
Trademarks and service marks xi

Preface xiii
About this book xiii
Who should read this book xiii
Conventions and terminology used in this book xiii
Note about version and release numbering xiv
Bibliography xv
Books from related libraries xv
How to send your comments xvi

Summary of changes xvii

Part 1. Business Transaction Broker infrastructure 1

Chapter 1. BTB architecture and services 3
BTB architecture 3
BTB services 3

Chapter 2. Administion of resources in BTB 7
Understanding resources 8
Trading Partner registrations 11

Chapter 3. Defining resources 15
Getting the BTB System Administration panel 15
Working with Agreement Sets 18
Working with MailRoom Services 19
Working with BEC applications 24
Understanding BEC destination types 25
Error Messages and Event Messages 28
Working with Business Programming Interfaces 29
Working with Scopes 31
Restriction Filter for Scope 33
Scope details 33
Defining Source Exits in MailRoom 34
Application Help Texts 38
Sundry prompt text 40
Input Scheduling 41
Output Scheduling 42
Working with rule-based fanning 44
Defining XML documents for MailRoom 49

Part 2. The MailRoom 53

© Copyright IBM Corp. 1992, 2002

Chapter 4. Terminology used in the MailRoom 57
Abbreviations 57
Document formats 57
Source and destination scenarios 60
MailRoom services 60
The M-record 62
Source envelopes 63
Derived envelopes 63
Destination envelopes 63
Requests 64
Envelope ID 64
MailRoom processing 64
MailRoom priority 66
Extended Routing 66
MailRoom Exits 68
Extended logging 70
MailRoom databases 70
MailRoom archiving 70

Chapter 5. Functionality of the MailRoom components 71
Source scenarios 71
The kernel component 74
Destination scenarios 76

Chapter 6. MailRoom acknowledgment settings 81

Chapter 7. Setting up source scenarios 85
APPC sources 85
BATCH sources 86
DI-EDI sources 88
EXP-DOC sources 95
EXP-FILE sources 96
MQ sources 101
PGM sources 102
SAP sources 103
SAP-MQ sources 106
TCPIP sources 108
TIE-IMS sources 110
TIE-MQ sources 112

Chapter 8. Setting up destination scenarios 115
APPC destinations 115
BATCH destinations 116
DI-EDI destinations 119
EXP-DOC destinations 123
EXP-FILE destinations 126
FAX destinations 129
MAIL destinations 130
MQ destinations 132
NULL destinations 134
PGM-CICS destinations 135
SAP destinations 137
SAP-MQ destinations 139
TCPIP destinations 142

TIE-IMS destinations 144
TIE-MQ destinations 146
The system acknowledgment scenarios 148

Chapter 9. MailRoom supplied exits 153
MailRoom supplied source exits 153
MailRoom supplied document exits 154

Chapter 10. MailRoom On-line Monitoring 165
Envelopes 165
Requests 169
Transmission Queue 179
Group Command 180
Continuous Receives 182
Status codes in MailRoom 185
Restart envelopes and documents 186
Error handling 189
Error notification 193
Autofail and warning report 194
Service Point of Contact (SPOC) 195

Chapter 11. MailRoom Audit Facilities 197
Audit logging and reconciliation 197
Audit reconciliation reports delivered 201

Appendix A. Getting started with Business Transaction Broker 205
Using BTB list panels 206
Using BTB detail panels 207

Appendix B. Audit tables 209

Index 215

Figures

1. BTB architecture and services . . . 3
2. Administration responsibilities . . . 7
3. Services . . . 9
4. Business Programming Interfaces . . . 9
5. Back-end definitions . . . 10
6. Trading Partners . . . 12
7. BTB System Administration . . . 15
8. Options panel . . . 16
9. Modify Option panel . . . 17
10. Agreement Sets panel . . . 18
11. Modify Agreement Set panel . . . 19
12. MailRoom Services panel . . . 20
13. Modify MailRoom Service . . . 21
14. Modify BEC Application panel . . . 24
15. BEC Destination Types panel . . . 26
16. Modify BEC Destination Type panel . . . 27
17. Error Messages and Event Messages panel . . . 28
18. Modify message panel . . . 29
19. Business Programming Interfaces panel . . . 30
20. Modify Business Programming Interface . . . 30
21. Scopes panel . . . 32
22. Restriction Filter for Scope panel . . . 33
23. Scope details . . . 34
24. Source Exit panel . . . 35
25. Modify Source Exits panel . . . 37
26. List of Help Texts panel . . . 39
27. MQ Reply Queue (Ack) - Help . . . 39
28. List of Sundry Items panel . . . 40
29. Modify Sundry Item Value panel . . . 40
30. Modify MailRoom Send Subscription panel . . . 41
31. List of Schedules panel . . . 42
32. Modify Schedule panel . . . 43
33. Display of Schedule panel . . . 43
34. List of Rule-based Fanning Rule Sets panel . . . 44
35. List of Rule-based Fanning Rules . . . 45
36. Modify Rule panel (TP rule) . . . 46
37. Modify Rule panel (SS rule) . . . 46
38. Modify Rule panel (VS rule) . . . 47
39. Modify Rule panel (LE rule) . . . 47
40. Modify Rule panel (DI rule) . . . 48
41. List of Value Sets in Rule Set panel . . . 48
42. List of Values in Value Set panel . . . 49
43. XML Document definition panel . . . 50
44. Modify XML Document definition panel . . . 50
45. BTB MailRoom component overview . . . 54
46. Simple M-record and Service subscription . . . 63
47. Processing in BTB MailRoom . . . 64
48. MailRoom and DataInterchange dependencies . . . 89
49. Issue Continuous Receive panel . . . 99
50. Setting up the codepage conversion exit parameters . . . 155

© Copyright IBM Corp. 1992, 2002

51. Setting up the DataInterchange exit parameters . . . 156
52. Setting up the MQSI exit parameters . . . 157
53. Setting up the Super exit parameters . . . 159
54. Setting up the Mercator exit parameters . . . 160
55. MailRoom control information for OTMA exit . . . 163
56. BTB Administration . . . 165
57. MailRoom Source Envelope Status panel . . . 166
58. MailRoom Expanded Source Envelope panel . . . 167
59. Details of Envelope panel . . . 169
60. MailRoom Requests in an Envelope panel . . . 170
61. Details of Request panel . . . 172
62. Details of MailRoom List of Events . . . 174
63. Details of MailRoom Additional text on Event . . . 175
64. Details of Document contents . . . 176
65. Details of MailRoom Document Versions . . . 177
66. Details of DataInterchange Transactions Details . . . 178
67. Details of DataInterchange Transactions Image . . . 178
68. MailRoom Transmission Queue . . . 179
69. MailRoom Search for Group . . . 180
70. MailRoom Group Command for Source/Derived envelope . . . 181
71. MailRoom Continuous Receives . . . 183
72. MailRoom Continuous Receives, detail panel . . . 184
73. System Errorlog panel . . . 190
74. Details of System Errorlog panel . . . 191
75. Details of System Errorlog - Help panel . . . 192
76. Common DB2 Resource Types - Help panel . . . 192
77. Common DB2 Reason Codes - Help panel . . . 193
78. Insert new Working Criteria Entry panel . . . 193
79. Modify Working Criteria Entry panel . . . 195
80. Define System Options . . . 200
81. Summary report . . . 202
82. BTB logon panel . . . 205
83. Main Panel . . . 206
84. Agreement Sets panel . . . 206
85. Modify MailRoom Service panel . . . 208
86. Audit tables . . . 209

Tables

1. Source exit availability table 35
2. Relation between type of source and Sender Identity 36
3. Document formats supported by MailRoom 58
4. M-record field assignments for response programs. 91
5. KBDTAX table 210
6. KBDTDI table 211
7. KBDTAE table 212

© Copyright IBM Corp. 1992, 2002

Notices

References in this publication to IBM products, programs, or services do not imply that IBM intends to make these available in all countries in which IBM operates. Any reference to an IBM product, program, or service is not intended to state or imply that only that IBM product, program, or service may be used. Subject to IBM's valid intellectual property or other legally protectable rights, any functionally equivalent product, program, or service may be used instead of the IBM product, program, or service. The evaluation and verification of operation in conjunction with other products, except those expressly designated by IBM, are the responsibility of the user.

IBM may have patents or pending patent applications covering subject matter in this document. The furnishing of this document does not give you any license to these patents. You can send license inquiries, in writing, to:

IBM Director of Licensing
IBM Corporation
North Castle Drive
Armonk, NY 10504-1785
U.S.A.

Trademarks and service marks

The following terms are trademarks of the IBM Corporation in the United States or other countries or both:

ACF/VTAM	MQSeries
AIX	MVS/ESA
CICS	OS/2
DB2	OS/390
ExpEDIte	QMF
IBM	RACF
IBM Global Network	VTAM
IMS	WebSphere

The following terms, used in this publication, are trademarks of other companies:

Mercator	Mercator Software, Inc.
SAP	SAP AG

Windows and Windows NT are trademarks of Microsoft Corporation in the United States and/or other countries.

UNIX is a registered trademark in the United States and/or other countries licensed exclusively through X/Open Company Limited.

© Copyright IBM Corp. 1992, 2002

Preface

About this book

This book is intended to help you understand how to create and implement applications in Business Transaction Broker for z/OS (BTB).

IBM Business Transaction Broker for z/OS helps address brokering requirements and helps enable enterprises to implement brokering solutions with confidence. While IBM Business Transaction Broker for z/OS is designed to facilitate Application-to-Application (A2A) brokering for interchange between internal applications within a customer's enterprise, the dominant strength of this product is revealed and appreciated when implementing Business-to-Business (B2B) brokering for the external interchange outside of the customer's enterprises.

To better emphasize its B2B brokering capabilities, the IBM program product formerly known as Intelligent Message Broker for z/OS has now been renamed Business Transaction Broker for z/OS (BTB).

This book is split into two parts:

- Part 1, “Business Transaction Broker infrastructure” on page 1 gives an overview of the administration tasks in BTB, a description of BTB resources, and instructions on how to define those resources.
- Part 2, “The MailRoom” on page 53 describes the functions and processes in the MailRoom, and tells you how to monitor the MailRoom. It also gives instructions on how to set up a send and receive environment in Business Transaction Broker.

Who should read this book

This book is for Business Transaction Broker system administrators, system architects, and others who need to know how to administer BTB.

Conventions and terminology used in this book

In this book, Business Transaction Broker for z/OS is referred to as "Business Transaction Broker" or simply "BTB" where the context makes the meaning clear.

CICS refers CICS Transaction Server for OS/390.

RACF means the Resource Access Control Facility or any other external security manager that provides equivalent function.

© Copyright IBM Corp. 1992, 2002

Note about version and release numbering

Where the documentation for Business Transaction Broker - in particular the *Installation Guide* - refers to the actual contents of the product, e.g. dataset names, it will refer to Version 4, Release 5. This is because this product has a history of being distributed internally within IBM as Intelligent Message Broker (IMB) for a number of years. Within IBM the product has matured to a Version/Release level of 4.5.

Bibliography

Business Transaction Broker for z/OS books

Business Transaction Broker for z/OS General Information	GC27-1580
Business Transaction Broker for z/OS Facilities Guide	SC27-1584
Business Transaction Broker for z/OS Installation Guide	GC27-1581
Business Transaction Broker for z/OS Application Programming Guide	SC27-1583
Business Transaction Broker for z/OS System Administration Guide	SC27-1582
Business Transaction Broker for z/OS User Administration Guide	SC27-1585

Futher copies of the Business Transaction Broker for z/OS publications can be downloaded from the product web site:

`http://www.ibm.com/software/ad/imb`

Books from related libraries

CICS TS books

CICS Transaction Server for OS/390 Release Guide	GC34-5352
CICS Transaction Server for OS/390 Installation Guide	GC33-1681
CICS Transaction Server for OS/390 System Definition Guide	SC33-1682
CICS Transaction Server for OS/390 Resource Definition Guide	SC33-1684
CICS Transaction Server for OS/390 Operations and Utilities Guide	SC33-1685
CICS Transaction Server for OS/390 System Programming Reference	SC33-1689
CICS Transaction Server for OS/390 Messages and Codes	GC33-1694
CICS Transaction Server for OS/390 Intercommunication Guide	SC33-1695
CICS Transaction Server for OS/390 Performance Guide	SC33-1699

DataInterchange for MVS books

DataInterchange Messages and Codes	SB34-2000
DataInterchange Programmer's Reference	SB34-2001
DataInterchange Administrator's Guide	SB34-2002

DB2 books

DB2 for OS/390 Administration Guide	SC26-8957
DB2 for OS/390 Application Programming and SQL Guide	SC26-8958
DB2 for OS/390 Command Reference	SC26-8960
DB2 for OS/390 Utility Guide and Reference	SC26-8967

Expedite/CICS books

Customizing and Developing Applications with Expedite/CICS	GC34-3304

IBM EDI Services Information Exchange books

IBM EDI Services Information Exchange Interface Programming Guide	GC34-2222

MQSeries books

MQSeries Planning Guide	GC33-1349
MQSeries for OS/390 System Management Guide	SC34-5374

MVS books

MVS Planning:Global Resource Serialization	GC28-1759

RACF books

OS/390 Security Server (RACF) Administrator's Guide	SC28-1915

Automated Operations Control/MVS books

AOC/MVS Planning and Installation	GC28-1082
AOC/MVS Operations	GC28-1084

ACF/VTAM books

Advanced Communications Function for VTAM Installation and Resource Definition	SC23-0111

How to send your comments

Your feedback is important in helping to provide the most accurate and highest quality information. If you have any comments about this book or any other BTB documentation:

- Send your comments by email to *SPOC@dk.ibm.com*. Be sure to include the name of the book, the part number of the book, the version of BTB, and, if applicable, the specific location of the text you are commenting on (for example, a page number or table number).
- Mail or fax your comments to the address at the front of this book.

Summary of changes

The major enhancements to this release of Business Transaction Broker are:

Source Exit

BTB now supports source exits, which makes it easier to implement support for new document types. One new area in this release is XML document routing support. The source scenario will handle incoming documents like this:

- A business document in its original format is passed to BTB. MailRoom will perform a lookup to determine if a source exit should be invoked.
- For MQSeries based scenarios there is an Unpack Exit that should split the received MQ buffer into records.
- For all scenarios (except BATCH and TIE-IMS) there is a Source exit that can build BTB routing information (the M-record) if it is not available in the received document.
- The received document together with the generated M-record is stored in the transport table. The remaining processing is unchanged.
- The MailRoom source exit table holds registrations of exits used by source scenarios. Source exits are either global for a scenario, or specific for a single sender.
- MailRoom supplied source exits will, as default, be used to build the M-record for the DI-EDI, EXP-FILE, SAP and SAP-MQ source scenario. A source exit with XML support is available (see below). Other user written source exits can be written to extend the format support in MailRoom.

XML support

BTB now supports receiving and dynamic routing of XML documents. A XML source exit is available to extract XML elements for building BTB routing information (the M-record). A new panel is available to define which XML elements or attributes should be extracted for each XML document type. A new kernel / destination exit can automatically convert a received XML document to a basic flat file format.

MQSI V1.1 (MVS) reformatter exit

BTB now has an MQSI reformatter exit. In the first version it can format a document to a stream format (records separated with character delimitors), put it on a queue, wait for MQSI to reformat it, get the reformatted stream and finally return it to MailRoom as an updated version of the document.

MailRoom Continuous Receive panel.

A new online function makes it easy to check the status of DataInterchange and Expedite/CICS continuous receives. DI profiles can be stopped and started. It is possible to define a number of profiles as mandatory. A function key can be used to check if the mandatory profiles are active.

© Copyright IBM Corp. 1992, 2002

Archiving depending on status

Every installation must archive data from the MailRoom DB2 tables in order to remove old data. It is now possible to define the status codes that are applicable for archiving. It is thereby possible to reflect the day to day operational method in the archiving strategy. E.g. FAILed documents are considered open problems and stay in MailRoom until fixed (status changes to FINISH or manually CANCELed). Another principle could be that FAILed documents should be automatically archived.

Schedule process change

A change has been made in the Output Schedule in MailRoom to control the order of sending scheduled envelopes for the same destination. Previously the sending order was in envelope key sequence. Now scheduled envelopes to the same destination are grouped in a single destination envelope and the sending order has been changed to the received order.

Possibility to Mail Text segments

In error situations, when processing EDI like EDIFACT and ANSI X12, a copy of the EDI document is needed for documentation. A new function has been implemented to mail the DataInterchange reports and segments to a specific user Id and node or e-mail address.

Reflow of saved DI audit reports

The text in the DataInterchange audit reports is now automatically reflowed to the width of the panel. It is no longer necessary to scroll right and left to read the audit report.

Segmentation of saved EDIFACT envelope

The saved EDIFACT envelope file is now split in segments to improve the readability.

Handling of a group of envelopes/requests

A new facility is made available to handle more than one envelope using a single group command. Some of the online functions (cancel, fail, finish, resend, restart, sysack) are made available as a group command for multiple envelopes.

Automatic resending of MAIL destination to Internet

We now put documents on the MailRoom XMIT queue if the SMTP server is temporary unavailable.

New MQSeries Batch Read Utility

In addition to the MQSeries Batch Write Utility introduced in last release we now also have a MQSeries Batch Read Utility that can get MailRoom formatted messages from a MQ queue and write them to a file.

SAP R/3 Version 4 improvements

MailRoom now supports sending and receiving SAP R/3 Version 4 IDOCs.

Codepage conversion exit

A new codepage conversion exit is now available as kernel or destination exit. With supplied codepage translation tables it can convert a document from one codepage to another.

Mercator remapping exit improvements

The Mercator exit has been improved with support for selection of profiled or fixed length for input and output (:P or :W parameters to Mercator). Now it is also possible to pass additional command options to Mercator.

Part 1. Business Transaction Broker infrastructure

Business Transaction Broker is a set of middleware components that enable and control the communication between client applications and business application-servers. BTB middleware provides a host-based gateway solution including security, routing, queueing, scheduling and monitoring facilities.

© Copyright IBM Corp. 1992, 2002

Chapter 1. BTB architecture and services

BTB architecture

BTB consists of a front-end communication part and a back-end communication, providing these services for clients and servers:

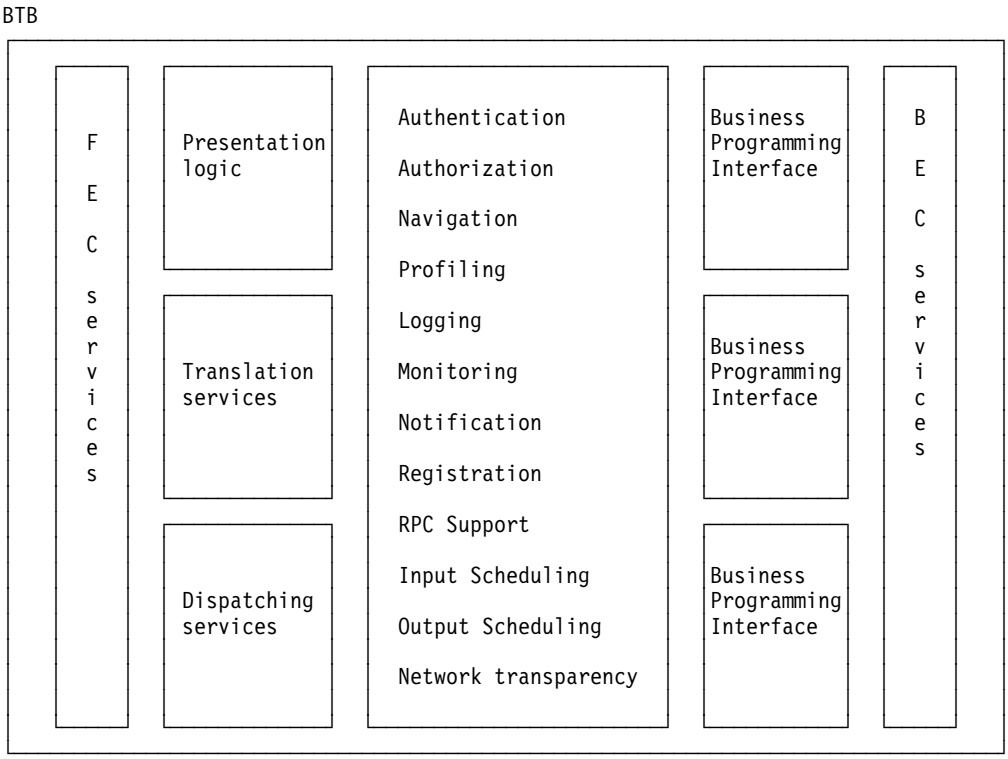

Figure 1. BTB architecture and services

BTB services

Security and authentication

BTB lets internal and external users integrate their business. BTB uses standard RACF protection of its resources. Internal users must provide a user ID and password for authentication. External users must pass additional gateway controls ensuring extended user authentication. All users must be pre-registered. User access is limited to the specific authorizations that exist for every user.

Profiling

For workstation clients BTB provides an API that returns an *access list* providing authorizations for signed-on users. This information can be used to *personalize* the user interface on the workstation, for example, to make certain options non-selectable on pull-down menus, if the current user is not authorized to perform them.

© Copyright IBM Corp. 1992, 2002

Navigation
This makes the location of application and data servers transparent to the client application. The location is known only by the table-driven BTB components. When the location of a server changes, only one entry in a controlling table in BTB need be changed.

Not all servers need to be accessible from each BTB system. With the appropriate registrations, it is also possible to route a request to another control and service layer.

Network transparency
Programmers need not issue direct calls to APPC or TCP/IP. Instead, they issue a call to a local server, providing a logical transaction name and related data as parameters.

Logging
Extended online logging and archiving facilities allow for auditing and billing requirements to be satisfied. A starter-set of QMF queries for reconciliation is provided with BTB.

Routing
Routing functions enable all communication processing to be handled outside of the application. BTB routes messages to destinations using the correct protocol, based on information that has been recorded by the BTB administrator. Dynamic routing is possible where the application data contained in the message dictates where the message is to be routed.

Proactive monitoring and notification
BTB continuously monitors its own processes. Application owners and operations personnel are notified immediately an exceptional situation occurs.

Network protocol conversion
The front-end and back-end communication services can handle a variety of network protocols, allowing client applications to access BTB using one set of protocols, while BTB accesses the business integration servers using another set of protocols. This allows the internal environment to remain stable while extending client connectivity options with, for example, TCP/IP, or Lotus Notes connectivity.

Input Scheduling
This feature allows for checking that the expected input arrives, and alerts the Service Point of Contact (SPOC) if a transmission is missing.

Output Scheduling
Asynchronous server requests can be momentarily stopped in the MailRoom and scheduled for later delivery to their respective destinations.

Multiple access modes to business applications
BTB enables non-programmable terminal (NPT) access, interactive client/server processing, and asynchronous, queued processing for the same business applications. Queued processing is handled by the MailRoom. This is particularly suited for EDI implementations, but is also used to *batch* on-line transactions, while waiting for an application to be released.

The different access modes exist concurrently, facilitating transition from legacy applications to distributed solutions.

An advantage of BTB supporting three access modes is that the interactive service can strengthen the generic EDI service and vice versa.

The progress of the EDI process can be queried by an external partner organisation using interactive services, while the interactive services can be used to request an asynchronous upload of data using generic MailRoom services.

Client/server design

The business applications are activated as a server in a layered client/server chain initiated by the user client.

Modularity

BTB is scalable, and additional function can easily be added. Additional services include generic error and information message service, generic help services, and statistics gathering.

NPT development environment

BTB has an extensive application development platform, providing application skeletons, tools packages, and application design guidance to enable a rapid application development process.

Chapter 2. Adminstion of resources in BTB

BTB includes many resources, and it is the administrator's responsibility to define and make these resources available for Trading Partners and users of BTB.

Who should have access to which resources and to what data is decided by the organization owning and running the BTB system. An administrator delegates this access to Trading Partners and users.

Administration can be divided into three areas:

- System administration, described in this book
- Central administration, described in the *User Administration Guide*
- Local administration, described in the *User Administration Guide*

Tasks and responsibilities for each type of administrator are shown in Figure 2.

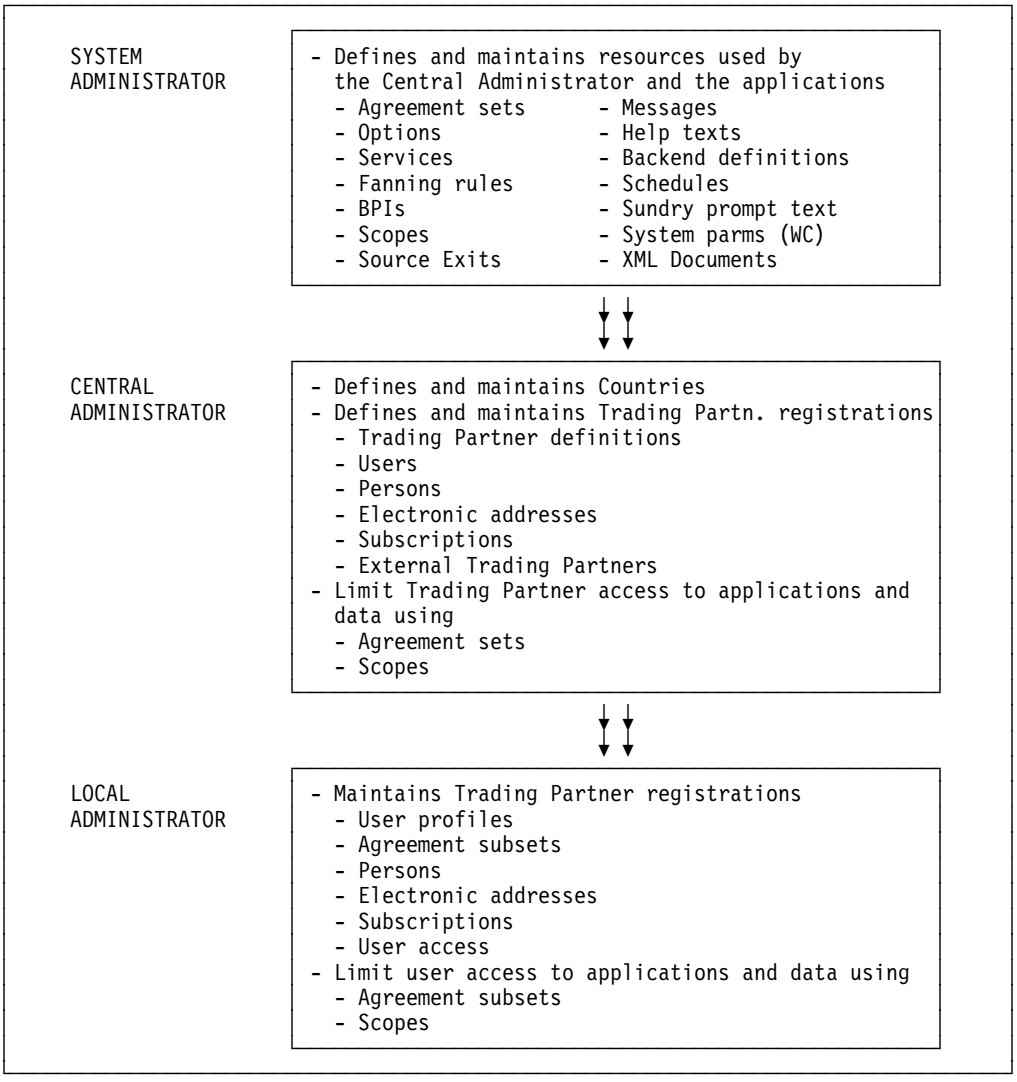

Figure 2. Administration responsibilities

The System and Central user administrators are defined centrally by the BTB-owning organization.

© Copyright IBM Corp. 1992, 2002

The users within the Trading Partner's organization, by default, have the same access to resources as the Trading Partner. A Local user administrator is defined only if the Trading Partner organization needs to give user groups different access to BTB resources.

Understanding resources

Resources are divided into two groups:

- Resources for defining and grouping the server applications:
  - Agreement Sets
  - Options
  - Services
  - BPIs
  - Scopes
- Resources to be used by the server applications:
  - Messages
  - Help texts
  - Back-end definitions
  - Input scheduling
  - Output scheduling
  - Rule-based fanning rules
  - Sundry prompt text
  - System parameters
  - Source Exits
  - XML Definitions

Agreement Sets

An Agreement Set is an authorization pool consisting of online menu options, MailRoom services and client/server Business Programming Interfaces (BPIs).

Agreement Sets are project oriented. One or more Agreement Sets are linked to a Trading Partner account. Multiple Trading Partners can be linked to the same Agreement Set.

Options

BTB provides an execution environment for host-based 3270 client applications. These clients are registered as Options in BTB.

By specifying an Option, you can invoke a user-written program, or any business application product from the BTB panels.

Services

Asynchronous MailRoom processes are defined as Services. Services and Subscriptions combine to describe the characteristics of the sender and receiver systems, and to describe the data format to interchange. A defined Service can be subscribed to by a number of Trading Partners (see Figure 3 on page 9).

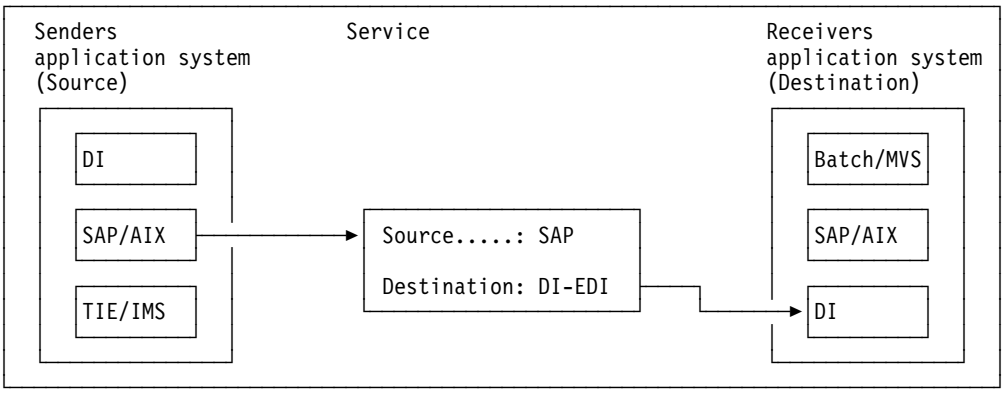

Figure 3. Services

The source and destination systems are independent, so any source system can be combined with any destination system in a Service.

Business Programming Interfaces (BPIs)

The Business Programming Interface lets you use BTB as a synchronous client/server gateway for clients needing to activate various business application servers.

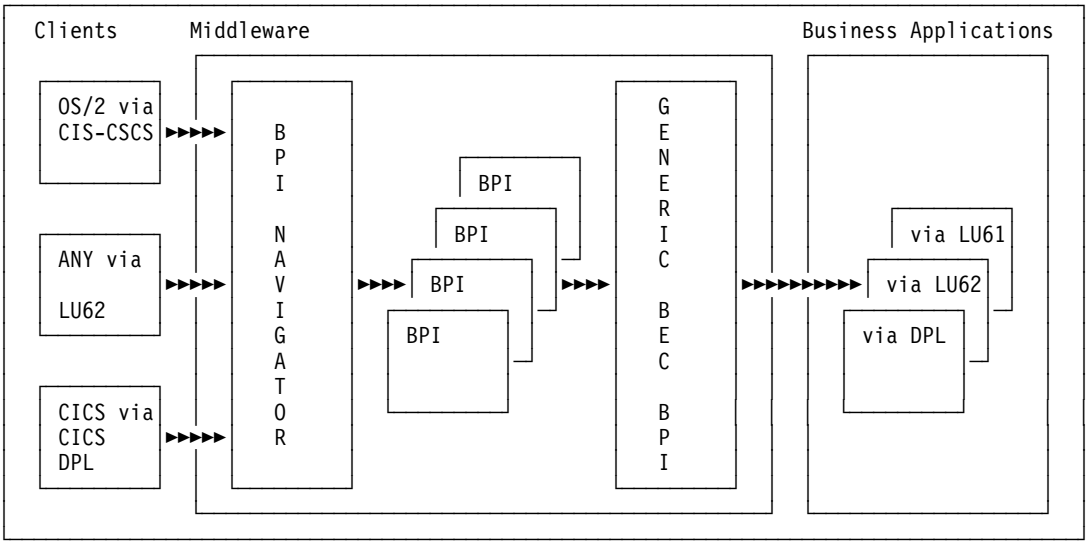

Figure 4. Business Programming Interfaces

The business applications are activated as the ultimate server in a layered client/server chain.

Scopes

Scopes are a restriction filter for applications and to data. A Trading Partner can be given a Scope to limit which data to work with. Users will by default be given access to the same resources and data as the Trading Partner that they are linked to. However, it is possible to limit user access by using Scopes.

Messages

Error Messages and Event Messages are message numbers and message IDs with associated message texts to be used by BTB and user applications running in BTB. Messages can be inserted and customized from the BTB panels.

Error messages are used by BTB itself and by user applications (both online NPT applications and BPI client/server applications).

MailRoom Event Messages are used by the MailRoom online monitoring facility, exits, and user applications.

Help texts

The BTB help system is a generic component that stores text information and presents it to users from the BTB panels. It consists of a DB2 table to store the help text, a CSP call to an API to present the help, and a utility program to control the loading of help text.

BTB uses this system for online help for menus, monitoring panels and registration panels. It can also be used from other 3270-based applications running under BTB.

Sundry prompt text

This is a generic place to store character, decimal and integer values, and related descriptions for later use in applications as *F4 Prompt Lists* and as input validation.

The Sundry support consists of a DB2 table to store the sundry texts, a CSP call to an API to verify values, and a set of CSP applications to maintain Sundry texts online in BTB.

Back-end definitions

Back-end Communication (BEC) destinations

Describe the technical attributes of the back-end business server (for example, the communication protocol used and the LU name of the system). These definitions are used when defining BEC applications.

Back-end Communication (BEC) Applications

Describe the transaction to be activated in the back-end system.

Figure 5 shows the relationship between Services, BEC applications, BEC destinations, and business applications:

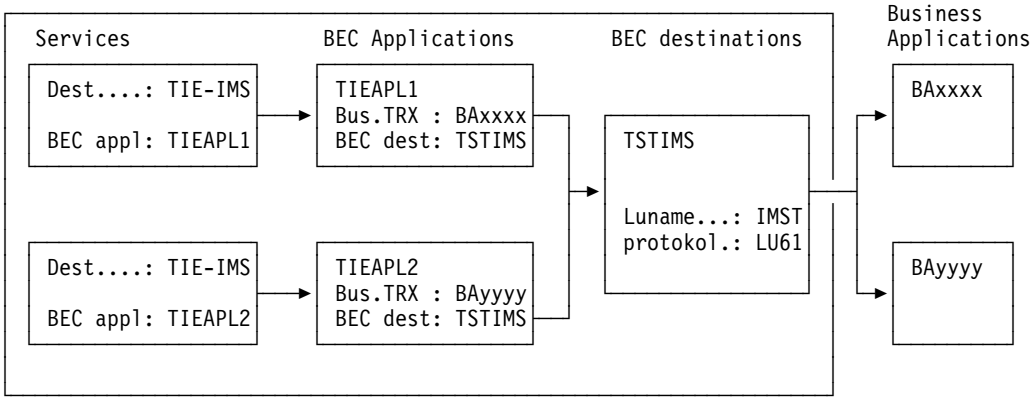

Figure 5. Back-end definitions

Input Scheduling

This feature lets MailRoom check that input is arriving as expected. The input schedule can detect a missing daily transaction and then alert the Service Point of Contact (SPOC).

Output Scheduling

Can be used to specify if certain asynchronous requests should be temporarily stopped in the MailRoom and scheduled for later delivery to their respective destinations. This is done by defining the schedules, and then referring to the Schedule entity on the Service definitions.

It can also be used in the synchronous client/server scenario to temporarily stop access to the BPIs.

Rule-based fanning rules

These are used to decide which Trading Partners can receive a copy of the document currently being processed. The rules can, for example, instruct MailRoom to look for specific text strings in the document and to use the retrieved values to make the final list of Trading Partners.

Rule-based fanning will be activated if rules have been defined, extended routing is selected on the Service, rule-based fanning is selected as extended routing type, and the defined set of rules is referenced by the Service.

System parameters

These are stored in the Working Criteria (WC) table. Default system parameters are delivered with BTB, for example parameters to control MailRoom scanner frequency. For information about these parameters, refer to the *Installation Guide*.

Other parameters will be defined as the system administrator sets up the receive and send environments for the Trading Partners.

Source Exits

Source Exits is used by MailRoom before storing the incoming data. The Source Exits can either be a user written program or one of the MailRoom standard Source Exits. MailRoom looks in the Source Exits definitions and checks whether a Source Exit should be executed before storing the data.

XML Definition

XML Definition is used by MailRoom to dynamically assign MailRoom information for arriving XML Documents. The XML Processor source exit must be activated to enable this function.

Trading Partner registrations

Trading Partner resources are defined and maintained by the Central Administrator (refer to the *User Administration Guide*).

Trading Partners

The Trading Partner is the main entity in the user area. It is used to identify accounts or companies.

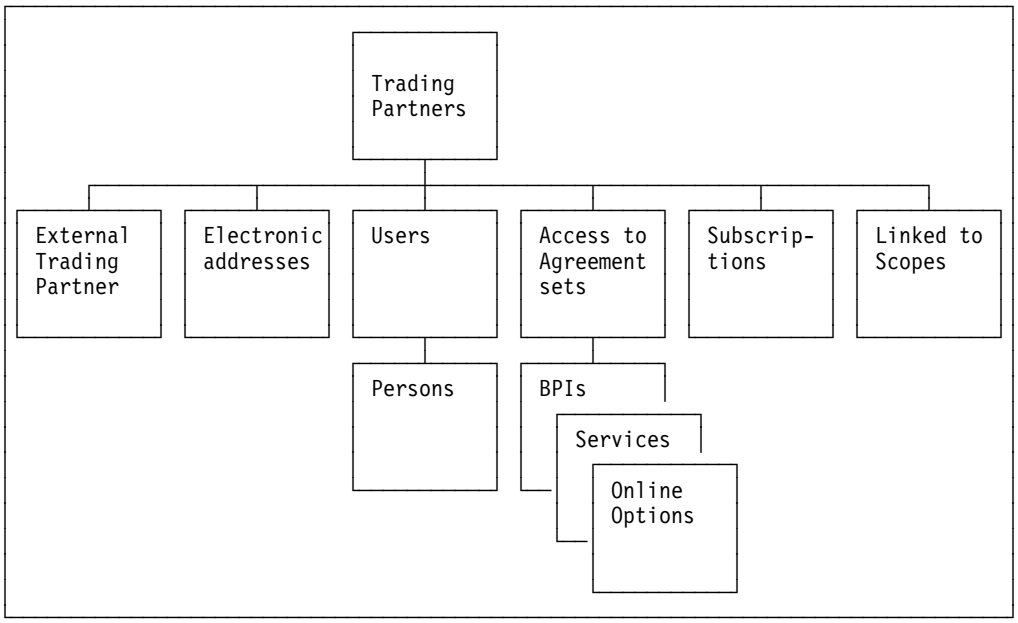

Figure 6. Trading Partners

Users and Persons can only exist if they are associated with a Trading Partner account.

Nodes and Electronic Addresses are defined for a Trading Partner, and can be referenced by all Users and resources that this Trading Partner has access to.

Agreement Sets, Subscriptions and Scopes are authorization entities defined by a System Administrator. They can be linked to different Trading Partners and Users, controlling their access to the resources.

External Trading Partner

This is an alias for a specific Trading Partner. An external Trading Partner ID can be mapped to an internal Trading Partner ID.

A Trading Partner can have zero or more external Trading Partner IDs defined as aliases. The same external Trading Partner ID cannot exist for two different Trading Partners.

Users

These can be users for a Trading Partner, or BTB administrators. The user IDs must be defined to RACF.

The default access is for the users within a Trading Partner account have access to the same objects and resources as the Trading Partner.

User access can be further limited by adding Agreement Subsets and security Scopes, allowing many users with different security Scopes for the same Trading Partner.

Persons

The Person entity can be used to register personal data for a user, such as name, job title, and telephone number. If required, a person can have multiple user IDs.

Electronic addresses

These identify a destination or mailbox within a remote system. For example, user IDs for an IE mailbox, or user IDs defined in Mail Exchange.

Electronic Addresses are defined locally for a Trading Partner, or they can be shared on country or system level. The Users and MailRoom Services and Subscription defined for that Trading Partner use these Electronic Addresses.

BTB supports these electronic address types:

FX Telefax number
HO Host address
IE IE Mailbox (IBM Information Exchange)
IN Internet e-mail address
LI Distribution list
ME IBMMAIL IEA (IBM Mail Exchange)
TC TCP/IP Server (Hostname or IP address)
TL Tools Append
VM VM/Host address

Subscriptions

Before a Trading Partner uses a MailRoom Service, the corresponding Subscriptions must be registered.

Chapter 3. Defining resources

This chapter describes resource definition to be performed by the System Administrator. Refer to the *User Administration Guide* for information about defining and maintaining Trading Partner registrations.

Understanding Online help

To get online help, press F1. The kind of help you get depends on the task you are performing when you request the help, and the position of the cursor in the panel. If the cursor is on the command line you will get general help about the contents of the panel.

Most panels with input fields have field-associated help. Place the cursor in the input field and press F1 to get help associated with that field.

For detailed descriptions of the fields in the panels shown in the examples in this chapter, refer to field-associated online help.

Getting the BTB System Administration panel

Log on to BTB and use the fastpath command **SADM** to get to the panel shown in Figure 7. This is the main panel for all the global resources in BTB:

```
SADM                    IMB System Administration (menu)                IMB

Type choice or fastpath, then press Enter.


_  1. OPTION Menu Options
   2. AGREM  Agreement Sets
   3. SERVIC MailRoom Services
   4. BECAPL BEC Applications
   5. BECDST BEC Destinations
   6. MSG    Error Messages and Event Messages
   9. BPI    Business Programming Interfaces
   A. SCOPE  Scopes
   E. SRCXIT Source Exit definitions
   H. HLPTXT Application Help Texts
   S. SUNDRY Sundry Prompt Texts
   T. SCHDUL Output Schedules
   X. XML    XML Document definitions




Command  ===>
F1=Help      F3=Exit      F12=Cancel
```

Figure 7. BTB System Administration

You can enter a fastpath command on the command line or type the choice you require in the input field next to Option 1.

© Copyright IBM Corp. 1992, 2002

To get the panel shown in Figure 8 on page 16, either enter the fastpath command **OPTION**, or select Option 1 from the BTB System Administration panel shown in Figure 7.

Getting the Options list

The panel in Figure 8 shows a list of available options.

```
KBEHBMIL                          Options                                IMB

Type one or more action codes, then press Enter.
Action codes: D=Delete  I=Insert  M=Modify  C=Copy  S=Select


A  Option  Fastpath  Lang. Menu-text
_          MENU      DA    Hoved Menu
_          MENU      FB    Hoved Menu
_          MENU      UK    Main Panel
_  A       ADM       DA    Administration
_  A       ADM       FB    Administration
_  A       ADM       UK    Administration
_  AH      HELPHD    DA    Midlertidig skift til anden forretningspa
_  AH      SKIFTG    FB    Midlertidig skift til anden forretningspa
_  AH      HELPHD    UK    Temporary change to another Trading Partn
_  A1      CADM      DA    Central Bruger Administration (menu)
_  A1      CADM      FB    Central Bruger Administration (menu)
_  A1      CADM      UK    Central User Administration (menu)
_

Command  ===>
F1=Help      F3=Exit      F8=Forward   F12=Cancel
```

Figure 8. Options panel

Enter a code in the action column next to the option you want to work with, and you get the modify panel shown in Figure 9 on page 17.

Modifying options

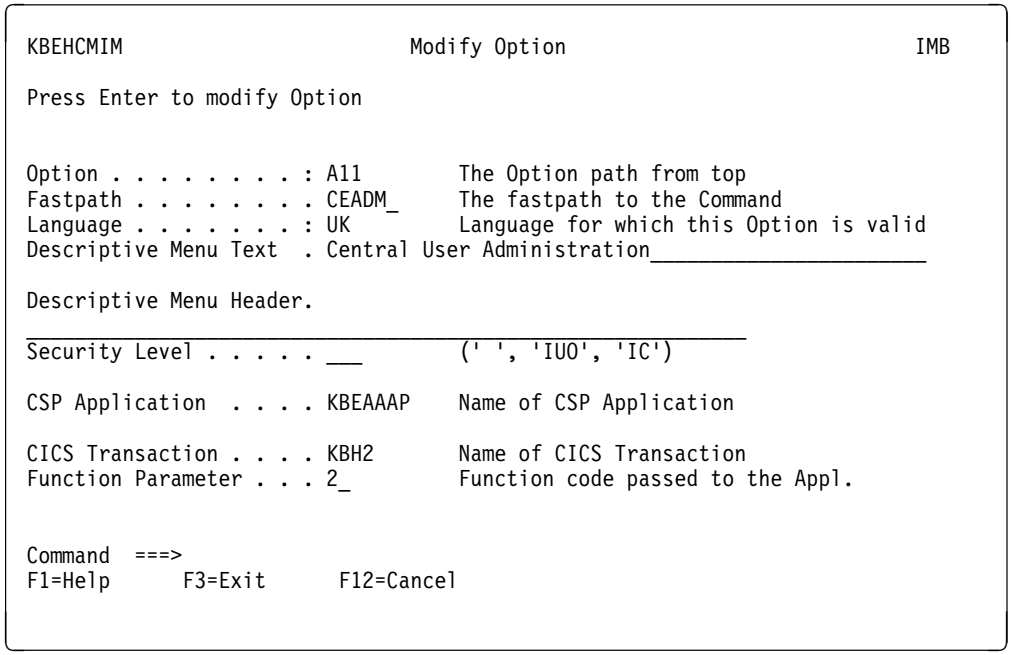

Figure 9. Modify Option panel

Here is a description of the fields:

Option Unique option path from the Main Panel.

Fastpath Unique name of the option used as fastpath from the BTB panels.

Language The language of the option. The language code defined in the user profile. The user can only see and use options with the same language code as defined in the profile as preferred language.

Descriptive Menu Text
The text on the panel where the option is listed.

Descriptive Menu Header
If the option is a menu, the Descriptive Menu Header is used as header text on the panel of the option.

Security level
If the Security Level is *IUO* or *IC*, the security level is shown on the top right corner of the panel.

CSP Application
The name of the application to be started. If the option is a menu then the application name is BTB.

CICS Transaction
The name of the transaction under which the application will run.

Function parameter
A function code given to the application.

Working with Agreement Sets

Either enter the fastpath command **AGREM**, or select Option 2 from the BTB System Administration panel shown in Figure 7 on page 15.

Listing Agreement Sets

The panel shown in Figure 10 shows a list of Agreement Sets.

```
KBEFBMIL                        Agreement Sets                          IMB

Type one or more action codes, then press Enter.
Action codes: B=BPIs in set   O=Options in Set  S=Services in Set
              T=Trading Partner Access  I=Insert  M=Modify  D=Delete


  ________ ____________________________________________
A  Agr.Set  Description
I  BPI-4    IMB Sample BPI
_  EDI-4+   MailRoom 4.2 Sample Services
_  KBHCEADM IMB Central User Administration
_  KBHDEVL  IMB Test Applications for Developer
_  KBHEDS   IMB MailRoom Monitor Application
_  KBHINSTL IMB Installation Applications
_  KBHOPER  IMB Operation Applications




Command  ===>
F1=Help      F3=Exit      F8=Forward   F12=Cancel
```

Figure 10. Agreement Sets panel

Enter a code in the action column next to the Agreement Set you want to work with. If you enter M, a modify panel is shown (see Figure 11 on page 19).

Modifying Agreement Sets

Here is the Modify Agreement Set panel:

```
KBEHEMIM                    Modify Agreement Set                          IMB

Press Enter to modify Agreement Set



Agreement Set  . . . . : KBHEDS


Description  . . . . . . IMB MailRoom Monitor Application________


Agreement Set Type . . . A     'A' = Normal Agreement Set
                               'B' = Special Agreement Set (Hidden)
                               ' ' = IMB Internal Administration Set




Command  ===>
F1=Help      F3=Exit      F12=Cancel
```

Figure 11. Modify Agreement Set panel

Here is a description of the fields:

Agreement Set
Name of this Agreement Set.

Description
Description of this Agreement Set.

Agreement Set Type
Type of Agreement Set.

Press F1 for more information about the fields.

Working with MailRoom Services

To link a specific source scenario with a destination scenario you must define a MailRoom Service and its Subscriptions. Depending on the type of Subscription on the Service, the source scenario and destination scenario types are specified either on the Service or on the Subscription. Once a Service is defined, it can be subscribed to by a number of Trading Partners.

Either enter the fastpath command **SERVIC**, or select Option 3 from the BTB System Administration panel shown in Figure 7 on page 15. You get the panel shown in Figure 12 on page 20.

Listing MailRoom Services

The panel in Figure 12 on page 20 shows list of MailRoom Services.

```
KBEIBMCL                      MailRoom Services                          IMB

Type one or more action codes, then press Enter.
Action codes: D=Delete  I=Insert  C=Copy  M=Modify  S=Select T=TP subscribers


 ___  ____  _______  _______________  ____________________________________
A  Cty  Appl  Service   Layout           Description
_  123  KBAW  KBAWTP11  XX-ORDER         Sample XX-ORDER to TP 11 via MAIL
_  123  KBAW  KBAWTP12  XX-ORDER         Sample XX-ORDER to TP 12 via FAX
_  123  KBAW  KBAWTP13  XX-ORDER         Sample XX-ORDER to TP 13 via DI-EDI
_  123  KBAZ  KBAZPGBA  PGM-TO-BATCH     Verification - PGM to BATCH
_  123  KBAZ  KBAZPGCI  PGM-TO-PGM-CICS  Verification - PGM to CICS
_  123  KBAZ  KBAZPGDI  KBAZOUT          Verification - PGM to DI-EDI
_  123  KBAZ  KBAZPGED  PGM-TO-EXP-DOC   Verification - PGM to EXP-DOC
_  123  KBAZ  KBAZPGEF  PGM-TO-EXP-FILE  Verification - PGM to EXP-FILE
_  123  KBAZ  KBAZPGFA  PGM-TO-FAX       Verification - PGM to FAX
_  123  KBAZ  KBAZPGMA  PGM-TO-MAIL      Verification - PGM to MAIL
_  123  KBAZ  KBAZPGTC  PGM-TO-TCPIP     Verification - PGM to TCPIP
_  123  KBAZ  KBAZPGTI  PGM-TO-TIE-IMS   Verification - PGM to TIE-IMS

Command  ===>
F1=Help      F3=Exit      F8=Forward   F12=Cancel
```

Figure 12. MailRoom Services panel

From this panel you can maintain BTB services.

Enter an action code next to the Service you want to work with and a scrollable panel similar to the one shown in Figure 13 on page 21 is displayed.

Modifying MailRoom services

Figure 13 on page 21 shows the Modify MailRoom Service panel.

```
KBEICM1M                  Modify MailRoom Service                      IMB

Press Enter to modify MailRoom Service

Global info for service
Service name . . . . . : TEST001
Country Code . . . . . : 678
Application System . . . XXX_
Description. . . . . . . Test BATCH to BATCH_____________________
Subscription Type. . . : S
Source Scenario. . . . : BATCH
Destination Scenario . . BATCH___ +
Enabled. . . . . . . . . 1 +
Document Layout. . . . . BATCH-TEST______
Archive Profile. . . . . ________ +
Fixed TP Receiver. . . . 000800000 +
Trading partner name . : test

Source: Batch
Source Accounting Info : <Data from Subscription>

Kernel processing
Extended Logging . . . . VERBOSE_ +
Priority level . . . . . ________ +
Kernel Exit  . . . . . . KBGXITP_ +
Exit parameters. . . . . ________________________________________

Dest: Batch
Send which records . . . ________ +
Format of M-Record . . . ________ +
Destination Exit . . . . KBGXITP_ +
Exit parameters. . . . . ________________________________________
Dest Accounting Info . . ________________________________________

Service Control info
Output Schedule  . . . . ________ +
Acknowledgment level . . 1 +
Overdue time . . . . . . __________

Define System Ack.
System Ack type. . . . . ________ +

Service Point of Contact
Trading partner number . 000800000 +
Trading partner name . . test____________________________________
Electronic address . . . HO: DKXXXXX  at TESTMVS_________________ +
Language code  . . . . . UK +


KBH103W Function key not valid here
Command  ===>
F1=Help      F3=Exit      F4=Prompt    F7=Backward  F12=Cancel
```

Figure 13. Modify MailRoom Service

The Modify MailRoom Service panel is a *dynamic* panel. The contents of the panel change depending on scenario.

Here is a description of the some of the fields that can appear:

Service name

Service name and Country Code provide the key to the Service table. The Service used will depend on the Country Code of the Trading

Partner. A Trading Partner can only subscribe to Services with the same country code.

Country Code
Indicates the country to which this Service applies. The Country Code matches the current Trading Partners Country Code.

Application System
An *information field*. It contains the ID of the Application System *owning* this service.

Description
Describes the service.

Subscription Type
Describes how subscriptions will be used for a particular Service. Press F1 for more information.

Source Scenario
Specifies the circumstances under which the document or data is passed to the MailRoom.

Destination Scenario
Specifies the circumstances under which the document or data is to be routed by the MailRoom.

Enabled A switch to enable or disable a Service.

Document Layout
The name of the data structure. When data is passed to the MailRoom, it is described by the Layout field in the M-record.

Archive Profile
Name of the Archive Profile. The Archive Profile is defined in the Sundry table.

Fixed TP Receiver
Internal TP number representing the receiver of the documents for this service.

Trading Partner name
Account name of the Service Point of Contact. The name is linked to the Fixed TP Receiver, and can not be entered.

Source attributes
Dependent on source type.

Extended Logging
A method of selecting the level of tracing information and events created by the MailRoom.

Priority level
Controls how different processes are concurrently processed.

Kernel Exit A program that is given control during the processing of a document immediately after the security check has been performed. Press Prompt (F4) to get a list of available exits. For more information, see “MailRoom Exits” on page 68.

Exit parameters
Parameters that are passed to the exit program.

Send which records

This option is used when sending a document to certain destinations. The field controls which records from the original document are sent to the destination.

Format of M-Record

This option is used to control which layout of the MailRoom M-record will be passed to the destination.

Destination Exit

A program given control during the document processing immediately before further sending or translation is performed.

Exit parameters

Parameters that are passed to the exit program.

Dest Accounting Info

Accounting information.

Output Schedule

The name of a schedule to be used for this Service. Press F4 to get a list of schedules to select from.

Acknowledgment level

The level of acknowledgment for a Service. The MailRoom will keep track of the processing of transactions, according to the specified acknowledgment level.

Overdue time

Number of minutes a transaction is allowed to be in pending status before the MailRoom considers it overdue.

System Ack type

Shows the environment the business application is running in. Refer to Chapter 6, “MailRoom acknowledgment settings” on page 81 for more information.

Press F4 for the System Ack type prompt.

Trading Partner number

Specify the account number of the Service Point of Contact.

Press F4 for the Trading Partner number prompt.

Trading Partner name

The Trading Partner name. The name is linked to the Trading Partner number and can not be entered.

Electronic address

Press F4 for the Electronic Address prompt.

Language code

Specify the preferred language for the Service Point of Contact. Press F4 for the Language Code prompt.

For detailed descriptions of the fields in the Modify MailRoom Service panel, refer to field-associated online help.

Working with BEC applications

Either enter the fastpath command **BECAPL**, or select Option 4 from the BTB System Administration panel shown in Figure 7 on page 15.

Listing BEC applications

```
KBBABMCL                        BEC Applications                          BTB

Type one or more action codes, then press Enter.
Action codes: D=Delete  I=Insert  C=Copy  M=Modify  S=Select


A  Appl Name              Location Dest.type    Transaction          Parameter
_  JSK  JSK-BEC-BROWSER   678      CICSLU61     JSKA                 JSKBRAP
_  JSK  JSK-CH-AUTH       678      IMSLU61      KEYT009
_  JSK  JSK-CUS-UPD       678      IMSLU61      KEYT007
_  KAE  FOS-CICS-D5       706      CICSLU61     KAEA                 KAED5AP
_  KAE  FOS-MN-TREL       702      IMSADF       VUFIT0MN             4MN
_  KBH  KBA-INBOUND       678      IMSLU61      KBAI9BM
_  KBH  KBHPING-APING     123      CICSLU62     APINGD
_  KBH  KBHPING-BECCICS   123      CICSLU62     KBBX
_  KBH  KBHPING-DPL       123      CICSDPL      DEFAULT              KBBXB2P
_  KBH  KBHPING-TCPIP     123      TCPIP-2>4    01812

Command  ===>
F1=Help      F3=Exit      F8=Forward   F12=Cancel
```

This panel presents a list of all the BEC applications in BTB. For details regarding designing applications using BEC refer to the *Application Programming Guide*.

Enter an action code next to the BEC Application you want to work with. If you enter M, a modify panel is shown (see Figure 14).

Modifying BEC Applications

```
KBBACM1M                    Modify BEC Application                      BTB

Press Enter to modify BEC Application

Application code . : KBA-INBOUND
Location . . . . . : 678
Application Id . . . KBH_
Destination type . . IMSLU61_____ +

Transaction. . . . . KBAI9BM_____________  Userid source. . . . 0 +
Transaction parm.. . _____________________  Userid . . . . . . . _________
Sysid. . . . . . . . IMSM_________________


Command  ===>
F1=Help      F3=Exit      F4=Prompt    F12=Cancel
```

Figure 14. Modify BEC Application panel

Here is a description of the fields:

Application code
The name of a BEC registration.

Location Indicates the physical machine where the transaction or program will run.

Application Id
An information field containing the ID of the application system that owns this BEC application.

Destination type
Identifies a specific type of communication with a remote system. BEC Applications using the same Destination type will use the same set of BEC communication, protocol and query modules with related parameters.

Transaction
Identifies the function or program on the remote system.

Transaction parm
An optional field used to pass a parameter to the transaction on the remote system.

Sysid Identifies the address of the remote system.

Userid source
Specifies the user ID that is sent to the remote system (if the protocol supports parsing a user ID).

Userid The user ID used when *Userid source* is *3*.

Codepage For TCP/IP, the ASCII-EBCDIC codepage specifies a translation table between data stored in an ACSII codepage and an EBCDIC codepage. The tables are based on standard translation tables from IBM Character Data Representation Architecture (CDRA).

For detailed descriptions of the fields in the Modify BEC Application panel refer to field-associated online help. For more information about designing BEC applications, refer to the *Application Programming Guide*.

Understanding BEC destination types

Either enter the fastpath command **BECDST**, or select Option 5 from the BTB System Administration panel shown in Figure 7 on page 15. You get the panel shown in Figure 15 on page 26.

Listing BEC destination types

```
KBBAEMCL                    BEC Destination Types                        BTB

Type one or more action codes, then press Enter.
Action codes: D=Delete  I=Insert  C=Copy  M=Modify  S=Select


  ____________  ____________________________________________
A  Dest Type     Description
_  CICSDPL       CICS Distributed Program Link Protocol
_  CICSLU61      LU61 ISC link TO CICS, Native protocol
_  CICSLU62      LU62 APPC Native protocol (< 32 K)
_  IMSADF        LU61 ISC link TO IMS, ADF NC protocol
_  IMSLU61       LU61 ISC link TO IMS, Native protocol
_  IMSLU61-MULT  LU61 TO IMS, Native Prot, Multi Segment
_  TCPIP         TCP/IP New protocol (> 32K)
_  TCPIP-2>4     TCP/IP Protocol (2 byte length fields)
_

Command  ===>
F1=Help      F3=Exit      F8=Forward   F12=Cancel
```

Figure 15. BEC Destination Types panel

The panel in Figure 14 on page 24 shows all BEC Destination Types registered in BTB.

A BEC Destination Type is a predefined set of BEC communication, protocol, and query modules and related parameters. The supplied set of BEC Destination Types should not be altered.

For more information about designing applications using BEC refer to the *Application Programming Guide*.

Enter an action code next to the BEC Destination type you want to work with. If you enter M, a modify panel is shown (see Figure 16 on page 27).

Modifying BEC destination types

```
KBBAFM1M                Modify BEC Destination Type                    BTB

Press Enter to modify BEC Destination Type

Destination type . . . : IMSLU61-MULT

Destination description. LU61 TO IMS, Native Prot, Multi Segment_

Protocol module. . . . . KBBCP1P_ +
Communication module . . KBBCC5P_ +
Comm. Query module . . . ________ +
Query option key . . . . ________
Comm. parameter 1. . . . 00000135
Comm. parameter 2. . . . ________
Comm. parameter 3. . . . ________________________________________
Comm. parameter 4. . . . ________________________________________
Protocol parameter 1 . . ________
Protocol parameter 2 . . ________________________________________


Command  ===>
F1=Help      F3=Exit      F12=Cancel
```

Figure 16. Modify BEC Destination Type panel

Here is a description of the fields:

Destination type
Identifies a specific type of communication with a remote system. BEC Applications using the same Destination type will use the same set of BEC communication, protocol and query modules with related parameters.

Destination description
Description of the Destination type.

Protocol module
A mandatory field that specifies the name of the BEC Protocol module to be used in this type of destination.

Communication module
A mandatory field that specifies the name of the BEC Communication module to be used in this type of destination.

Comm. Query module
An optional field that specifies the name of the BEC Query module to be used in this type of destination.

Query option key
An optional field that specifies a parameter to be used by a Query module. The key can be used for further lookup in another DB2 table by the Query module.

Comm. parameter 1-4
An optional field that specifies a parameter to be used by a Communication module. The key can be used for special processing or control in the Communication module.

Protocol parameter 1-2

An optional field that specifies a parameter to be used by a Protocol module. The key can be used for special processing or control in the Protocol module.

For detailed descriptions of the fields in the Modify BEC Destination Type panel refer to field-associated online help.

Error Messages and Event Messages

Either enter the fastpath command **MSG**, or select Option 6 from the BTB System Administration panel shown in Figure 7 on page 15 and you get the panel shown in Figure 17.

Listing messages

```
KBEMEMCL              Error Messages and Event Messages                BTB

Type one or more action codes, then press Enter.
Action codes: D=Delete  I=Insert  C=Copy  M=Modify  S=Select


  __________  __  _  ____________________________________________________
A  Message   Lang Sev Message text
_  KBH001      AA  I  Welcome to IMB &1 (&2) (c) Copyright IBM Denmark A
_  KBH001      DA  I  Velkommen til IMB &1 (c) Copyright IBM Denmark A/S
_  KBH001      UK  I  Welcome to IMB &1 (c) Copyright IBM Denmark A/S &3
_  KBAKEA001   UK  I  Service is disabled
_  KBAKEA002   UK  I  Send subscription is disabled
_  KBAKEA003   UK  A  Request failed due to bad subscription
_  KBAKEA004   UK  I  Scheduled for run at &1 on &2
_  KBAKEA005   UK  A  Routing error Rc=&1 (trx=&2)
_  KBAKEA006   UK  A  Schedule error Rc=&1 for Schedule Id=&2           ed
_  KBAKEA007   UK  A  Envelope failed due to routing/scheduling problems

Command  ===>
F1=Help      F3=Exit      F8=Forward   F12=Cancel
```

Figure 17. Error Messages and Event Messages panel

The panel shown in Figure 17 shows a list of messages defined in BTB. The list contains error messages and MailRoom event messages. Error messages and event texts are usually nine or ten characters long.

Short messages (six characters long) are used by online applications (3270) as error messages. The country code *AA* is used to hold more technical versions of the messages that are shown in response to the **?AAMSG** command.

Enter an action code next to the message you want to work with. If you enter M, a modify panel is shown (see Figure 18 on page 29).

Modifying messages

```
KBEMFM1M                          Modify message                          BTB

Press Enter to modify message

Message Id . . . . . : KBAKEA004
Language code. . . . . : UK
Severity code. . . . . I
Message text . . . . . .
Scheduled for run at &1 on &2_____________________________________________


Command  ===>
F1=Help      F3=Exit      F12=Cancel
```

Figure 18. Modify message panel

Here is a description of the fields:

Message Id
Enter a Message Id. Message Ids to be used by online applications (3270) must not exceed six characters.

Language code
The language code for the message text.

Severity code
The severity code of the message ID.

Message text
Explanatory message text.

Working with Business Programming Interfaces

Either enter the fastpath command **BPI**, or select Option 9 from the BTB System Administration panel shown in Figure 7 on page 15 and you get the panel shown in Figure 19 on page 30.

Listing Business Programming Interfaces

```
KBEHJMIL              Business Programming Interfaces                 BTB

Type one or more action codes, then press Enter.
Action codes: C=Copy D=Delete  I=Insert  M=Modify  S=Select


 ____  ________ ________  ____________________________________________
A  Syst  BPI Group Function  Description
_  KAE   *         *         FOS Front-end Ordering System             Group
_  KAE   ORDER     BACKLOG1  Get backlog for a specific product type
_  KAE   ORDER     BACKLOG2  Get backlog for a specific part number
_  KAE   ORDER     DETAILS   Get details of an order           (2.6)
_  KAE   ORDER     DETAILS2  Get details of an order
_  KAE   ORDER     OVERVIEW  Get overview of an order
_  KAE   ORDER     OVERVIE2  Get order overview for customer
_  KAE   ORDER     PARTLIST  Call FOS/CICS to get a list of part numbe
_  KAE   ORDER     TYPELIST  Get product types for customer
_  KAE   ORDER     TYPES     Call UPOS/IMS to get types of orders
_  KAE   ORDER     TYPES2    Get order types for customer
_  KAE   ORDER     UPDATE    Call UPOS/IMS to Update an order
_

Command  ===>
F1=Help      F3=Exit      F8=Forward   F12=Cancel
```

Figure 19. Business Programming Interfaces panel

The panel shown in Figure 19 shows a list of defined BPIs.

Enter an action code next to the BPI you want to work with. If you enter M, a modify panel is shown (see Figure 20).

Modifying a Business Programming Interface

```
KBEHKMIM            Modify Business Programming Interface           BTB

Press Enter to modify BPI

Application System: KAE       Project identification
BPI Group . . . . : ORDER     The "Object"
BPI Function. . . : DETAILS2  The "Action"
Description . . . . Get details of an order_____________________________

Application Type  . CICS      (BEC,CICS,GRP)
Program . . . . . . KAE2ODP_  Name of Data-Server program
Security  . . . . . 1         (1=Restricted,0=Public)
Data conv.Exit. . . ________   Exit pgm. to manipulate data
Enabled   . . . . . 1         (1=Yes,0=No)


Availability. . . . ________ +            Pointer to Schedule
ASCA Data Logging . ____                  TD Queue name (XXXX or KBIA)

Command  ===>
F1=Help      F3=Exit      F4=Prompt    F12=Cancel
```

Figure 20. Modify Business Programming Interface

All fields except *Application System*, *BPI Group*, and *BPI Function*, can be modified.

Here is a description of the fields:

Application System
An information field containing the ID of the application system or project that owns this BPI. Many tables in the MailRoom have a key that include this field and the Country code field. This field is first part of the external name (key).

BPI Group The BPI Group identifies which area the BPI can support (also known as *Object*). This field is second part of the external name (key).

BPI Function
A further distinction into sub functions (also known as *Action*). This field is third part of the external name (key).

Description
Describes the function of the BPI.

Application Type
Identifies how BTB processes a BPI.

Program The server program to process the received data and create the data to be sent back to the user. The program can also be a generic infrastructure program *KBIBECP*, which can interface a BPI with an existing back-end defined in BEC.

Security Defines how access to the BPI is controlled.

Data conv. Exit
A CICS program performing checks and conversion on the data structure received from, and sent back to, the user. *KBIXITP* is a generic exit to blank out characters with unwanted hexadecimal values.

Enabled Temporarily enable or disable a BPI to prevent access if the server is stopped.

Availability Contains the name of a defined Schedule, controlling access to the BPI.

ASCA Data Logging
Contains the name of the CICS TD queue.

For detailed descriptions of the fields in the panel shown in Figure 20 on page 30, refer to field-associated online help.

Working with Scopes

Either enter the fastpath command **SCOPE**, or select Option A from the BTB System Administration panel shown in Figure 7 on page 15 and you get the panel shown in Figure 21 on page 32.

Listing Scopes

```
KBEJBMCL                              Scopes                                BTB

Type one or more action codes, then press Enter.
Action codes: D=Delete  I=Insert  C=Copy  M=Modify  S=Select V=Scope Values


  ___  _______________  ____________________________________________
A  Cty. Scope            Description
_  123  ADMIN-CTRY       Central User Adm Cty
_  123  MAILROOM-CTRY    Envelope Status Cty
_  123  HELPHD-CTRY      HelpHD Country


Command  ===>
F1=Help      F3=Exit      F12=Cancel
```

Figure 21. Scopes panel

A Scope is a restriction filter that specifies which data the user can operate on. The panel shown in Figure 21 shows a list of defined Scopes.

A Scope is regarded as a resource, and as for other resources (BPIs, Options, Services, Agreement Sets), this sequence of events applies:

1. The resource is maintained (inserted, modified, or deleted) in BTB System Administration.
2. The resource is given to a Trading Partner in Central Administration.
3. The Trading Partner can give the resources to the users on a local level, so limiting the rights of a user.

These BTB applications need additional access using Scope:

- CEADM
- HELPHD
- ENVST
- REQST

If you run any of those BTB applications, you must have access to these Scopes:

ADMIN-CTRY Central User Adm Cty
HELPHD-CTRY HelpHD Country
MAILROOM-CTRY Envelope Status Cty

Your access depends on which restriction filters are defined in the Scope. For example, if a Central Administrator grants a Trading Partner access to run the fastpath **ENVST**, with permission to operate on data for Country Code 678, the Central Administrator inserts *678* as a restriction filter to the Scope *ADMIN-CTRY*. In Central Administration, the Scope with restriction filter *678* is given to the Trading Partner.

Restriction Filter for Scope

Type **V**, for Scope Values in the field next to a Scope in the Scopes panel (Figure 21 on page 32), and you get the panel shown in Figure 22.

```
KBEJEMCL                Restriction Filter for Scope                    BTB

Type one or more action codes, then press Enter.
Action codes: D=Delete  I=Insert

Scope  . . . . :  123 / ADMIN-CTRY       / Scope used in Central Administration


F  Restriction Filter       Description
_  *                        All countries
_  123                      Test country
_  678                      Denmark


Command  ===>
F1=Help      F3=Exit      F12=Cancel
```

Figure 22. Restriction Filter for Scope panel

From the panel shown in Figure 22 you can insert or delete Restriction Filters.

For a country Scope an asterisk in the *Restriction Filter* field grants access to all countries. Entering a specific number restricts the Scope to that country code.

In the panel shown, it is possible to give an asterisk, 123, or 678 to a Trading Partner. You could not give a Trading Partner access to country code 848 unless country code 848 is defined here.

Here is a description of the fields:

Restriction Filter
Restricts access.

Description
A general description of the Restriction Filter.

Scope details

Type **I** or **M** for Scope Details in the field next to a Scope in the Scopes panel (Figure 21 on page 32), and you get the panel shown in Figure 23 on page 34.

```
KBEJCMIM                          Modify Scope                              BTB

Press Enter to modify Scope


Country code . . . . . .: 123

Scope definition . . . . .: ADMIN-CTRY

Scope description. . . . .. Scope used in Central Administration____


Validate . . . . . .. 0  (0 = Validation,    'prompt' possible)
                            (1 = No validation, 'prompt' possible)
                            (2 = No validation, 'prompt' not possible

Privilege (desc. order) .. UPD_  READ  ____  ____  ____

Max length Restrict.filter. 03

Command  ===>
F1=Help      F3=Exit      F12=Cancel
```

Figure 23. Scope details

From the panel shown in Figure 23 you can insert or modify Scope values.

For a Scope value, you can enter a valid privilege.

Here is a description of the fields:

Country Code Shows the country code to which this Scope applies.

Scope definition Shows the Scope definition.

Scope description
Enter a description of the Scope.

Validate Enter the validation code.

Privilege Indicates what privilege can be used.

Max length Restrict.filter.
States the length of the restriction filter.

For more information about the fields, press F1 for help.

Defining Source Exits in MailRoom

Either enter the fastpath command **SRCXIT**, or select Option E from the BTB System Administration panel shown in Figure 7 on page 15 and you get the panel shown in Figure 24 on page 35.

Source Exits

```
KBEIFMLL                    MailRoom Source Exits

Type one or more action codes, then press Enter.
Action codes: D=Delete  I=Insert  C=Copy  M=Modify  S=Select


   ________ ________________________ ________ ________ ___ ____________
A  SrcType  Sender identity          Unp.Exit Src.Exit Cty Layout
_  DI-EDI   <*>                               KBASXDP
_  EXP-FILE <*>                               KBASXFP
_  SAP      <*>                               KBASXSP
_  SAP-MQ   <*>                      KBASUMP  KBASXSP
_  TIE-MQ   <*>                      KBASUMP  KBGXSXP


Command  ===>
F1=Help      F3=Exit      F12=Cancel
```

Figure 24. Source Exit panel

Source exits are called by the MailRoom source layer every time a document is received and a source exit has been setup for this source scenario on the MailRoom Source Exits panel.

The intended purpose of using source exits is to have some exit points, where an exit can get control of data before data is stored in the MailRoom Transport tables. The exits can be used to unpack data in transmission format into BTB file format, and by this make it possible to transmit data to BTB that is in another format than those supported by BTB. The other main function is to enrich the data with routing information (M-record), if this not already part of data, or to update this routing information.

Note: The exits has the possibility to change the data, but this is not the intended purpose of using source exits.

The source layer has two exit points and also two types of exits that can be used by the source scenarios. The first type of exit *unpack exit* gets control when data is in transmission format. The second type *source exit* gets control when data is in BTB file format. The unpack exit will always get control before the source exit. Table 1 shows the dependence between the source scenario and the type of exit that is available.

Table 1 (Page 1 of 2). Source exit availability table

Source scenario type	Unpack exit	Source exit
APPC	N/A	Yes
BATCH	N/A	N/A
DI-EDI	N/A	Yes
EXP-DOC	N/A	Yes
EXP-FILE	N/A	Yes
MQ	Yes	Yes
PGM	N/A	Yes

Table 1 (Page 2 of 2). Source exit availability table		
Source scenario type	**Unpack exit**	**Source exit**
SAP	N/A	Yes
SAP-MQ	Yes	Yes
TCPIP	N/A	Yes
TIE-IMS	N/A	N/A
TIE-MQ	Yes	Yes

The use of source exit is controlled by the MailRoom source exit table, which hold all user information to be used by the exits. Every source scenario that supports source exits, will check this table for an exit when data is received. Information from this table is passed to the exit along with the received document, and can be used by the exit in building the BTB file format. The source layer will search the table to find an applicable exit entry. The key to this search is the type of source and the identity of the sender. See Table 2 for an explanation of the relation between the type of source and the identity of the sender. The search will attempt to locate an exit in the following order:

- Look for entry matching Source Type, Sender Identity part 1 and Sender Identity part 2. If Sender Identity part 2 is not used for the particulary source type, this step is omitted.
- Look for entry matching Source Type, Sender Identity part 1 and <*>.
- Look for entry matching Source Type and <*>. This will be a global exit.
- If an entry is found, the values for the entry will be used.
- If no entry is found, then no exit will be called and MailRoom is expecting the received data to be in BTB file format with an M-record as the first record.

Table 2. Relation between type of source and Sender Identity		
Source scenario type	**Sender Identity part1 (Sender_Id1)**	**Sender Identity part2 (Sender_Id2)**
APPC	Connection/SysID	N/A
DI-EDI	DI Internal TP id	DI Format
EXP-DOC	Msg User Class	Account / Userid
EXP-FILE	Msg User Class	Account / Userid
MQ	MQSeries Queue name	N/A
PGM	CICS Transaction	Userid
SAP	IP Address	N/A
SAP-MQ	MQSeries Queue name	N/A
TCPIP	IP Address	N/A
TIE-MQ	MQSeries Queue name	N/A

Business Transaction Broker supplies a sample exit:

BTB source sample exit Sample program to make a Specific Source exit. A Specific Source exit is an exit where the the user can modify data as needed. The sample program can be used as a skeleton for the user

written program. Please refer to &apg. for further information abount writing Sourec exits.

Enter an action code next the Source Exit you want to work with. If you enter M, a modify panel is shown in Figure 25.

Modifying Source Exits

```
KBEIGM2M                      Modify Source Exit

Press Enter to modify Source Exit

Source scenario:
Source type. . . . . : SAP-MQ__ +

SAP-MQSeries parameter:
MQSeries Queue name. . . ____________________________________________________
Unpack exit. . . . . . KBASUMP_ +
Unpack exit parameter. . ____________________________________________
Source exit. . . . . . KBASXSP_ +
Source exit parameter. . ____________________________________________

Fixed values for M-rec.
Country code . . . . . ___ +
Layout . . . . . ________________ +
Trading Partner, to. . . ____________________________________
Trading Partner, from. . ____________________________________
Appl. Reference data . . ____________________________________________

Command  ===>
F1=Help      F3=Exit      F4=Prompt    F12=Cancel
```

Figure 25. Modify Source Exits panel

The Modify Source Exit panel is a *dynamic* panel. Then contents of the panel change depending on scenario. Here is a description of the fields that can appear:

Source type.
The field identify the source scenario. For each type of scenario there exits a set of sender identity parameter.

Connection/LU.
Connection/LU is APPC specific sender identity parameter and it identify the APPC connection and LU name of the sender.

Internal TP Id
Enter the DataInterchange Internal TP Id, identifying the sender of the EDI.

Format Enter the DataInterchange Format.

Msg User Class
Msg User Class is expEDIte specific sender identity parameter and it identify the expEDIte Document Message User Class.

Account / Userid
Account / User id are expEDIte specific sender identity paramters and the identify the expEDIte Document Account / Userid.

MQSeries Queue name
MQSeries Queue name is a MQ specific sender identity parameter and it identify the MQSeries Queue Name.

Trans Id Trans Id is a PGM specific sender identity parameter and it identify the trans id for the program.

User Id Trans Id is a PGM specific sender identity parameter and it identify the user id for the program.

IP Address IP Address is a SAP and TCPIP SAP specific sender identity parameter and it identify the SAP TCP/IP Address.

Unpack exit.
The Unpack Exit is the name of an exit to be invoked after data has been received in the MailRoom. The Unpack Exit is called before the Source Exit for the source scenarios with a buffer transmission format The Unpack Exit must a record oriented file from the received buffer. The Unpack Exit can either be a Business Transaction Broker supplied Source Exit or a user written Unpack Exit.

Source Exit.
This is the name of the source exit, which should be executed by MailRoom. The Source Exit can either be a Business Transaction Broker supplied Source Exit or a user written Source Exit. Press F4 for prompt to get a list of Source Exits.

Source Exit parameter.
Here you can specify needed Source Exit parameter.

Country Code.
Country code is part of the Fixed values for M-record. The Source exit can use this value to override the field in the generated M-record.

Layout. Layout is part of the Fixed values for M-record. The Source exit can use this value to override the field in the generated M-record.

Trading Partner, to
Trading Partner to is part of the Fixed values for M-record. The Source exit can use this value to override the field in the generated M-record.

Trading Partner, from
Trading Partner from is part of the Fixed values for M-record. The Source exit can use this value to override the field in the generated M-record.

Appl. Reference data
Appl. Reference data

is part of the Fixed values for M-record. The Source exit can use this value to override the field in the generated M-record.

Application Help Texts

Either enter the fastpath command **HLPTXT**, or select Option H from the BTB System Administration panel shown in Figure 7 on page 15 and you get the panel shown in Figure 26 on page 39.

Listing help texts

```
KBHLBMHL                      List of Help Texts                        BTB

Type one or more action codes, then press Enter.
Action code: S=Select


   ____  ___  ________________  __  ____________________________________
A  Sys   Type Help-Text-Id    Lang  Help Title text
_  KBA   FLD  ACKLVL            UK  Acknowledgment level - Help
_  KBA   FLD  ARCHIVE           UK  Archive Profile - Help
_  KBA   FLD  BECAPL            UK  BEC Application - Help
_  KBA   FLD  BECAPLS           UK  BEC Application - Help
_  KBA   FLD  BECLOC            UK  BEC Location - Help
_  KBA   FLD  BECLOCS           UK  BEC Location - Help
_  KBA   FLD  CPCONV            UK  ASCII-EBCDIC Convert - Help
_  KBA   FLD  D-ACCNT           UK  Destination Accounting Info - Help
_  KBA   FLD  D-MQAQ            UK  MQ Reply Queue (Ack) - Help
_  KBA   FLD  D-MQMG            UK  MQ Manager - Help
_  KBA   FLD  D-MQQ             UK  MQ Queue - Help
_  KBA   FLD  DILOG             UK  SAP Sender TP Type - Help

Command  ===>
F1=Help      F3=Exit      F8=Forward   F12=Cancel
```

Figure 26. List of Help Texts panel

The panel shown in Figure 26 shows a list of all Help texts defined.

Enter action code S next to the Help text you want to work with and you get a panel similar to the one shown in shown in Figure 27.

Application help text details

```
D-MQAQ                   MQ Reply Queue (Ack) - Help


   The MQ Reply Queue is the name of the MQSeries Queue, that will be
   be used when acknowledgment level is 1 or 2. MQSeries will put a
   technical acknowledgment on this Queue to inform the Mailroom with
   a status of the request.

   It can either be locally defined on the local Queue Manager, or it
   can be defined on a remote Queue Manager, but it MUST be defined when
   acknowledgment level is 1 or 2.

   When sending to a remote defined Queue, see the MQSeries manual for
   definition of reply-to Queue.






F1=Help      F3=Exit      F12=Cancel
```

Figure 27. MQ Reply Queue (Ack) - Help

The panel shown in Figure 27 shows the selected Help Text.

Sundry prompt text

Either enter the fastpath command **SUNDRY**, or select Option S from the BTB System Administration panel shown in Figure 7 on page 15 and you get the panel shown in Figure 28.

Listing sundry items

```
KBHLJMCL                    List of Sundry Items                      BTB

Type one or more action codes, then press Enter.
Action codes: D=Delete  I=Insert  C=Copy  M=Modify  S=Select  T=Test


A  ____  ___ __ ________  ________________  ____________________________
A  Sys   Cty Lang Item     Value             Description
_  KBA   000  UK  ACKLVL    0                 No achnowledgment
_  KBA   000  UK  ACKLVL    1                 Acknowledgment from Read API /
_  KBA   000  UK  ACKLVL    2                 Acknowledgment from applicatio
_  KBA   000  UK  CPCONV                      TCP/IP build-in ASCII to EBCDI
_  KBA   000  UK  CPCONV    CP819277          ASCII cp 819 (ISO 8859-1)   to
_  KBA   000  UK  CPCONV    CP819500          ASCII cp 819 (ISO 8859-1)   to
_  KBA   000  UK  CPCONV    CP850277          ASCII cp 850 (multilingual) to
_  KBA   000  UK  CPCONV    CP850500          ASCII cp 850 (multilingual) to
_  KBA   000  UK  DST-TYPE  BATCH             Batch Output from MailRoom
_  KBA   000  UK  DST-TYPE  DI-EDI            IBM Data Interchange
_  KBA   000  UK  DST-TYPE  EXP-FILE          Little edi (Expedite/CICS)

Command  ===>
F1=Help      F3=Exit      F8=Forward   F12=Cancel
```

Figure 28. List of Sundry Items panel

The panel shown in Figure 28 shows the Sundry items defined.

Enter an action code next to the Sundry item you want to work with. If you enter M, a modify panel is shown (see Figure 29).

Modifying the Sundry Item Value

```
KBHLIM1M                 Modify Sundry Item Value                     BTB

Press Enter to modify value

Appl. System . . . . . : KBA
Country code . . . . . : 000
Language . . . . . : UK
Sundry Item. . . . . : DST-TYPE
Value (char) . . . . . : BATCH
Value.(integer). . . . .          0
Value.(decimal). . . . .          0.0000
Description. . . . . .
Batch Output from MailRoom_____________________________________________


Command  ===>
F1=Help      F3=Exit      F12=Cancel
```

Figure 29. Modify Sundry Item Value panel

From this panel you can insert, modify, delete, or view a Sundry Item, depending on the action entered in the previous panel. Refer to the *Application Programming Guide* for information on how the Sundry text items can be used.

Input Scheduling

Input Scheduling is used to ensure that input arrives as expected.

You control input scheduling by entering data into the *Input Schedule* field when making the subscription of the service. This is done on the *Insert new MailRoom Send Subscription* panel, or the *Modify MailRoom Send Subscription* panel.

Modifying the MailRoom Send Subscription

Figure 30 shows an example of the Modify MailRoom Send Subscription panel:

```
KBEICM2M              Modify MailRoom Send Subscription               BTB

Press Enter to modify Send Subscription

Subscription Data
Service name . . . . . : KBAZPGDI
Description. . . . . . : PGM to DI-EDI
Enabled. . . . . . . . . 1 +
Comments . . . . . . . . Verification subscription_____________

Source: Program
Source Accounting Info . ___________________________________________

Service Control info
Input Schedule . . . . . MO+TH_____________ +




Command  ===>
F1=Help      F3=Exit      F4=Prompt    F12=Cancel
```

Figure 30. Modify MailRoom Send Subscription panel

The Input Schedule field holds information about expected input frequency. This enables the BTB MailRoom to check that input is arriving as expected, and alert the Service Point of Contact (SPOC) if a transmission is missing.

A blank in the field indicates no Input Schedule control.

The values can be any combination of these codes, separated by a plus sign (+):

MO Input expected Mondays
TU Input expected Tuesdays
WE Input expected Wednesdays
TH Input expected Thursdays
FR Input expected Fridays
SA Input expected Saturdays
SU Input expected Sundays

For example, if a subscriber expects to receive a document every Monday and Thursday, the Input Schedule field is set to **MO+TH**.

Output Scheduling

A schedule keeps information about the availability of MailRoom resources such as services, BPIs and Options.

Either enter the fastpath command **SCHDUL**, or select Option T from the BTB System Administration panel shown in Figure 7 on page 15 and you get the panel shown in Figure 31.

Listing schedules

```
KBEMBMAL                      List of Schedules                          BTB

Type one or more action codes, then press Enter.
Action codes: D=Delete  I=Insert  C=Copy  M=Modify  S=Select


  ____  ___  ________  ________________________________________
A  Appl  Cty  Schedule  Description                              State
_  KAE   678  UPOS      UPOS availability for Denmark            Time open
_  KAE   724  UPOS      UPOS availability for Sweden             Force close
_  KBA   000  IE-SEND   Cheap nightly send rate IBM InfoExch.    Time close
_  KBA   678  TIE-IMS   MailRoom TIE link to CPHIMSP             Force open

Command  ===>
F1=Help      F3=Exit      F8=Forward   F12=Cancel
```

Figure 31. List of Schedules panel

The panel shown in Figure 31 shows a list of all schedules defined in BTB.

Enter an action code next to the schedule you want to work with. If you enter M, a modify panel is shown (see Figure 32 on page 43). When defining the service it is possible to link the Output Scheduling to the service.

Modifying schedules

```
KBEMCMAM                        Modify Schedule                          BTB

Press Enter to modify Schedule

Application System . . : KAE
Country Code . . . . . : 678
Schedule name  . . . . : UPOS
Description  . . . . . . Upos availability for Denmark_________________

Temp Open/Close. . . . . _ +        (' ','O','C')
Message to show. . . . . KAEXYZ____
Message var. (&1,&2) . . Year-end_________________  ____________________
Comment  . . . . . . . . ____________________________________________

Availability type         From  To      Availability type         From
WD Open Weekdays (Monday- 07:30 23:00   __ +                      _____
WE Open Weekends (Saturda 09:00 16:00   __ +                      _____
C2 Closed Tuesdays        18:00 23:00   __ +                      _____
__ +                      _____ _____   __ +                      _____

Command  ===>
F1=Help      F3=Exit      F4=Prompt    F6=Display   F12=Cancel
```

Figure 32. Modify Schedule panel

This is the panel you get if you type action code M on the panel shown in Figure 31 on page 42.

Displaying schedules

If you press F6 in the panel shown in Figure 32, you get the display panel shown in Figure 33.

```
KBEMDM1S                     Display of Schedule                         BTB

Schedule:  KAE  / 678 / UPOS                              'O'=Open
           Upos availability for Denmark                  '.'=Closed
                                                          '+'=Partial Open
                                          1 1 1 1 1 1 1 1 1 1 2 2 2 2
                        0 1 2 3 4 5 6 7 8 9 0 1 2 3 4 5 6 7 8 9 0 1 2 3
Monday . . . . . : ..............OOOOOOOOOOOOOOOOOOOOOOOOOOOOOO.
Tuesday  . . . . . : ..............OOOOOOOOOOOOOOOOOOO.............
Wednesday  . . . . . : ..............OOOOOOOOOOOOOOOOOOOOOOOOOOOOOO.
Thursday . . . . . : ..............OOOOOOOOOOOOOOOOOOOOOOOOOOOOOO.
Friday . . . . . : ..............OOOOOOOOOOOOOOOOOOOOOOOOOOOOOO.
Saturday . . . . . : ..................OOOOOOOOOOOOOOO...............
Sunday . . . . . : ..................OOOOOOOOOOOOOOO...............

Current state. . . . . : Time Open              2000-03-27-17.05.00.000000
Message  . . . . . :
KAEXYZ   System is closed due to: Year-end.

Command  ===>
F1=Help      F3=Exit      F12=Cancel
```

Figure 33. Display of Schedule panel

The panel shown in Figure 33 shows a schedule for a week. The current state and a time-stamp are also displayed. The time-stamp calculates the next time the schedule is open.

Working with rule-based fanning

Rules decide which Trading Partners receive a document.

For more information on Extended Routing, see “Extended Routing” on page 66. For more information on how to enable Extended Routing and Rule-based Fanning, see “Working with MailRoom Services” on page 19.

To get the List of Rule-based Fanning Rule Sets panel shown in Figure 34, either type the fastpath command **CADM** to get to Central Administration, and then select Option 7, or type the fastpath command **RULES** from any panel. You get the panel shown in Figure 34.

Listing Rule sets

```
KBEMRMCL            List of Rule-based Fanning Rule Sets              BTB

Type one or more action codes, then press Enter.
Action codes: D=Delete  I=Insert  S=Select  V=ValueSets


A  Cty  Appl  Ruleset          Description
_  123  KBAS  KBASRULE1        Rules for DI-EDI to Mail
_  123  KBAS  KBASRULE2        Rules for TCPIP to TP's
_  WWD  IDDE  214/IFTSTA-1     214/IFTSTA - TP to ICDB, IDDE,...
_  WWD  IDDE  204/IFTMIN-1     204/IFTMIN - IDDE to ICDB, TP's
_  WWD  IDDE  856/DESADV-1     856/DESADV - TP to ICDB, IDDE,...









Command  ===>
F1=Help      F3=Exit      F12=Cancel
```

Figure 34. List of Rule-based Fanning Rule Sets panel

The panel shown in Figure 34 shows a list of all rule sets defined in BTB.

Enter an action code next to the rule set you want to work with. If you enter S, a list of Rule-based Fanning Rules is shown (see Figure 35 on page 45).

If you enter V, a list of Value Sets in Rule Set is shown (see Figure 41 on page 48).

Listing rules

Figure 35 shows a list of all rules defined in BTB for the selected rule set.

```
KBEMMMCL              List of Rule-based Fanning Rules                BTB

Type one or more action codes, then press Enter.
Action codes: D=Delete  I=Insert  C=Copy  M=Modify  S=Select

Country/Application : 123 / KBAS
Ruleset name. . . . : KBASRULE1
Description . . . . . Rules for DI-EDI to Mail_________________


A  ___  __  Contents                                    Destination
_  010  TP  Respect Trading Partner in Document
_  020  SS  0002 009= WWID1DSHP                (More)
_  050  VS  0002 009= WWID1DSHP                (More)  MYTP2
_  055  SS  0002 009= WWID1DTRS                (More)  MYTP3
_  060  LE  020 AND 055                                MYTP1
_  070  SS  0002 009= WWID1DSHP                (More)
_  080  LE  060 OR  070                                /WWDLIST1

Command  ===>
F1=Help      F3=Exit      F12=Cancel
```

Figure 35. List of Rule-based Fanning Rules

Enter an action code next to the rule you want to work with. If you enter M, a modify panel is displayed for that rule (see Figure 36 on page 46). The layout of the rule modify panel varies depending on the rule type for the selected rule.

Here are the rule types:

TP Respect Trading Partner in M-record
SS Substring
VS Value Set lookup
LE Logical Expression
DI Distribution List

For more information, refer to “Extended Routing” on page 66.

Modifying rules

Figure 36 on page 46 shows an example of the modify panel for the *TP Rule*:

```
KBEMNM2M                        Modify Rule                              BTB

Press Enter to modify Rule

Rule set . . . . . : KBASRULE1

Rule number. . . . . : 010
Rule type. . . . . TP +  (SS=Substr, LE=Logical, DI=List, TP=docTP)

Respect Trading Partner rule









Command  ===>
F1=Help      F3=Exit      F4=Prompt    F12=Cancel
```

Figure 36. Modify Rule panel (TP rule)

Modyfying the SS rule

Figure 37 shows an example of the modify panel for the *SS Rule*:

```
KBEMNM2M                        Modify Rule                              BTB

Press Enter to modify Rule

Rule set . . . . . : KBASRULE1

Rule number. . . . . : 055
Rule type. . . . . SS +  (SS=Substr, LE=Logical, DI=List, TP=docTP)

Substring rule:
    SUBSTR ( 0002 , 009 ) =_ WWID1DTRS_____________________________ AND
    SUBSTR ( 0023 , 002 ) =_ _A____________________________________ AND
    SUBSTR ( ____ , ___ ) __ _____________________________________ AND
    SUBSTR ( ____ , ___ ) __ _____________________________________ AND
    SUBSTR ( ____ , ___ ) __ _____________________________________
             Start  Lng   Op Text

Trading Partner/Dist.List. . MYTP3_____________________________


Command  ===>
F1=Help      F3=Exit      F4=Prompt    F12=Cancel
```

Figure 37. Modify Rule panel (SS rule)

Modifying the VS rule

Figure 38 shows an example of the modify panel for the *VS Rule*:

```
KBEMNM2M                          Modify Rule                           BTB

Press Enter to modify Rule

Rule set . . . . . . . . . . : KBASRULE1

Rule number. . . . . . . . . : 050
Rule type. . . . . . . . . . VS +  (SS, LE, DI, TP, VS)

Value Set rule: Locate record:
    SUBSTR ( 0002 , 009 ) =_ WWID1DSHP_____________________________ AND
    SUBSTR ( ____ , ___ ) __ _____________________________________
             Start  Lng   Op Text
Substrings to lookup in Value Set
    SUBSTR ( 0040 , 004 ) + SUBSTR ( ____ , ___ ) + SUBSTR ( ____ , ___ )
             Start  Lng              Start  Lng              Start  Lng
Value Set to check . . . . . SHPTYPE_  +
Trading Partner/Dist.List. . MYTP2_____________________________


Command  ===>
F1=Help      F3=Exit      F4=Prompt    F12=Cancel
```

Figure 38. Modify Rule panel (VS rule)

Modifying the LE rule

Figure 39 shows an example of the modify panel for the *LE Rule*:

```
KBEMNM2M                          Modify Rule                           BTB

Press Enter to modify Rule

Rule set . . . . . . . . . . : KBASRULE1

Rule number. . . . . . . . . : 080
Rule type. . . . . . . . . . LE +  (SS=Substr, LE=Logical, DI=List, TP=docTP)

Logical Expression rule:

                             Ruleno        Ruleno
                          ( 020    AND    055 )
                                   |
                                  "+-> Operator

Trading Partner/Dist.List. : /WWDLIST1_____________________________



Command  ===>
F1=Help      F3=Exit      F4=Prompt    F12=Cancel
```

Figure 39. Modify Rule panel (LE rule)

Modifying the DI rule

Figure 40 shows an example of the modify panel for the *DI Rule*:

```
KBEMNM2M                          Modify Rule                              BTB

Press Enter to modify Rule

Rule set . . . . . . . . . : KBASRULE1

Rule number. . . . . . . . : 070
Rule type. . . . . . . . . . DI +  (SS=Substr, LE=Logical, DI=List, TP=docTP)

Distribution List rule:

Distribution List. . . . . . /WWDLIST1_____________________________

Trading Partner. . . . . . . MYTP1_____________________________
Trading Partner. . . . . . . MYTP2_____________________________
Trading Partner. . . . . . . _____________________________
Trading Partner. . . . . . . _____________________________
Trading Partner. . . . . . . _____________________________


Command  ===>
F1=Help      F3=Exit      F4=Prompt    F12=Cancel
```

Figure 40. Modify Rule panel (DI rule)

Listing Value Sets

You get this panel if you enter action code V from the panel shown in Figure 34 on page 44.

```
KBEMOMCL               List of Value Sets in Rule Set                BTB

Type one or more action codes, then press Enter.
Action codes: I=Insert  S=Select


A  ________
A  Value Set   Number of Values
_  SHPTYPE              11
```

```
Command  ===>
F1=Help      F3=Exit      F12=Cancel
```

Figure 41. List of Value Sets in Rule Set panel

Select a Value Set to get the panel shown in Figure 42 on page 49.

Listing values in a value set

You get this panel if you enter action code S from the panel shown in Figure 41 on page 48.

```
KBEMPMCL                List of Values in Value Set                  BTB

Type one or more action codes, then press Enter.
Action codes: D=Delete  I=Insert
Value Set . :    123 / KBAS / KBASRULE1        / SHPTYPE


A  Value
_  AA01
_  AA02
_  FOB
_  FOB1
_  FOB2
_  XX01
_  XX02
_  XX03
_  XX04
_  XX05
_  XX06

Command  ===>
F1=Help      F3=Exit      F12=Cancel
```

Figure 42. List of Values in Value Set panel

Defining XML documents for MailRoom

Either enter the fastpath command **XML**, or select Option X from the BTB System Administration panel shown in Figure 7 on page 15 and you get the panel shown in Figure 43 on page 50.

XML Document definitions

```
KBEIHMCL                  XML Document definitions                      BTB

Type one or more action codes, then press Enter.
Action codes: D=Delete  I=Insert  C=Copy  M=Modify  S=Select


A  XML Root Element          Description
_  MailRoomXMLInvoice        Test MailRoom XML Document
_  Order                     XML Order document
_  Order2                    Version 2 XML Order document









Command  ===>
F1=Help      F3=Exit      F12=Cancel
```

Figure 43. XML Document definition panel

An XML Document definition is used when MailRoom receives an XML document and the XML processor source exit (see “BTB XML Processor Source Exit KBASXMP” on page 153) has been specified as a source exit in the MailRoom source exit definition (see “Defining Source Exits in MailRoom” on page 34).

The XML Document definition is used to define which XML elements or attributes that should be used to dynamically build an M-record.

Enter an action code next to the XML Document you want to work with. If you enter M, a modify panel is shown in Figure 44.

Modifying XML Document definitions

```
KBEIIM1M               Modify XML Document definition                   BTB

Press Enter to modify XML Document

Identification of XML Document
Root Elem. : MailRoomXMLInvoice
Description. Test MailRoom XML Document_____________________________
XML path to element or attribute (dynamic):
Cty Code . . ________________________________________________________
Layout . . . ________________________________________________________
To TP. . . . InvoiceParties/Buyer$Id_________________________________
From TP. . . InvoiceParties/Supplier$Id______________________________
Appl. Ref. . InvoiceHeader/BuyerOrderNumber__________________________
Fixed override values (static):
Cty Code . . 123
Layout . . . XMLINVOICE
To TP. . . . ____________________________________
From TP. . . ____________________________________
Appl. Ref. . ____________________________________________

Command  ===>
F1=Help      F3=Exit      F12=Cancel
```

Figure 44. Modify XML Document definition panel

The detail panel is split in three parts:

- Identification of the XML document
- XML path to elements or attributes to be dynamically used when assigning the M-record. The used value will be dependent of the contents on the received XML Document.
- Fixed override values to be used in building the M-record. The used value will be the same regardless of the contents on the received XML Document.

Read more about defining XML Documents for MailRoom in the *Application Programming Guide*.

Part 2. The MailRoom

The MailRoom provides an asynchronous solution for different types of standardized data interchange between various Business applications.

All the data processing is event driven, it is processed as it arrives. However, it is possible for an administrator to delay the sending by using the output scheduling facility, and thereby save network charges.

The MailRoom consists of all the functions and components in BTB that are involved in the process of receiving and sending data. These are the MailRoom components:

- Source scenarios
  - Source exit
- Kernel
  - Security checking functions
  - Data preprocessing functions
  - Kernel exit
  - Output scheduling functions
  - Routing functions
- Destination scenarios
  - Destination exit

© Copyright IBM Corp. 1992, 2002

Overview of the MailRoom

Figure 45 shows an overview of the MailRoom components.

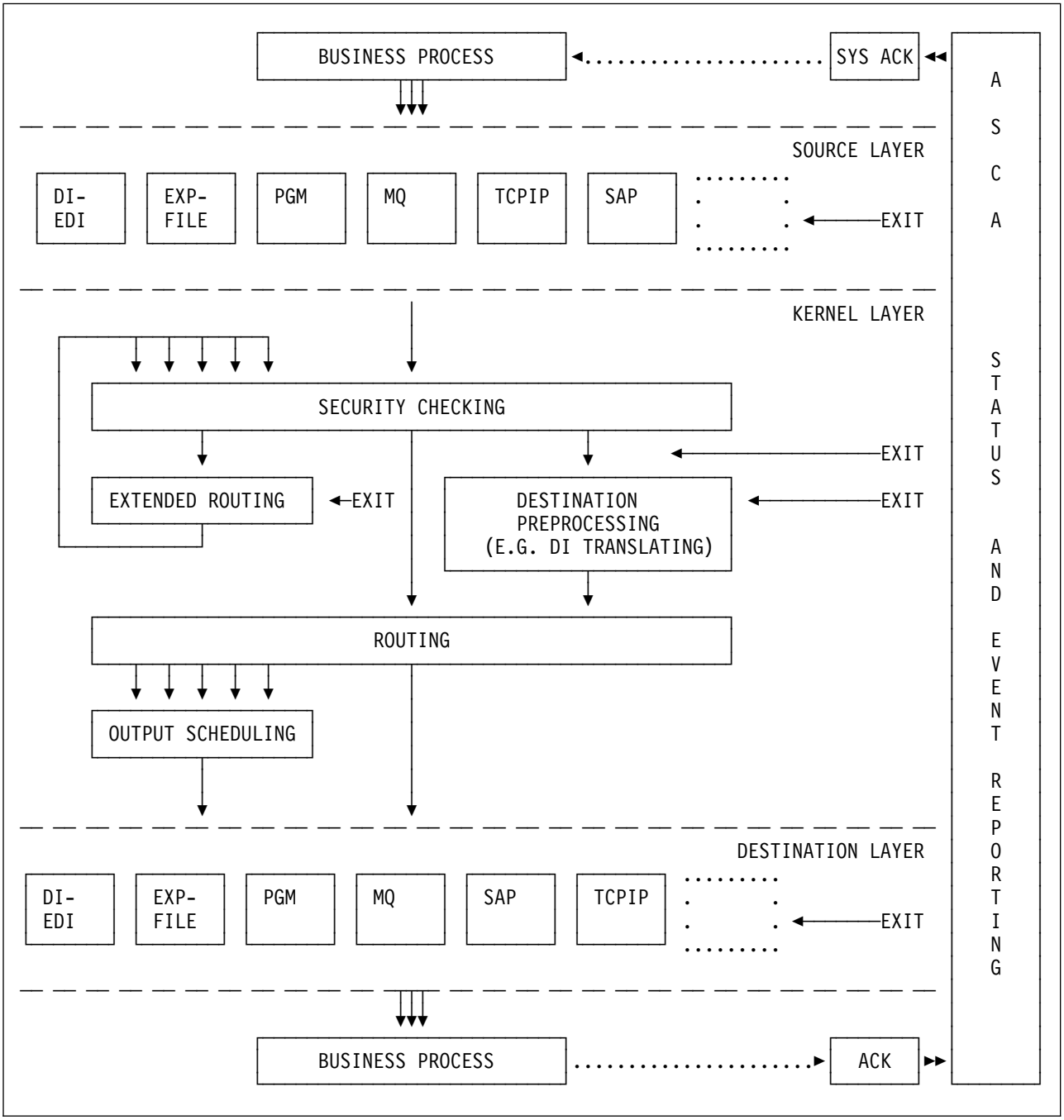

Figure 45. BTB MailRoom component overview

MailRoom layers

The MailRoom is structured into a number of layers, each with a distinct responsibility.

Sending business process

While not part of the MailRoom, the sending business process is the primary initiator of delivery services in MailRoom. It passes a business document to MailRoom and might later receive a System Acknowledgment when processing has completed.

Source Layer

The Source Layer receives the passed document from the sending business process and if necessary converts it to MailRoom format (M- and D- records) via source exits (supplied or user written).

Kernel layer

The Kernel Layer determines the actions to be performed on the received document based on the M-record and MailRoom service and subscription registrations. The document can be inspected or even converted to a different format by a Kernel exit (supplied or user written).

Normally a document is just sent to a single receiver but if necessary it can also be routed to multiple receivers. In Extended Routing it is possible for supplied or user written code to dynamically determine the proper receivers (one or more) based on the document contents or other factors.

When one or more receivers have been found and checked, Routing and Output Scheduling determines if the documents should be sent immediately or at a later point in time.

Destination Layer

At this point the document is ready to be sent, but before doing so, it is possible to let a Destination exit (supplied or user written) inspect or convert the document. Then the document will be passed or sent to the receiver and MailRoom know from the registrations if it should expect acknowledgments from the receiving business process. If sending is not possible due to temporary transmission problems, MailRoom will later automatically initiate a retransmission.

Receiving business process

Finally the document reaches its intended receiver which might generate a network or business acknowledgment after successful processing. The acknowledgment is returned to MailRoom and matched against previous status information about the document and it might also trigger a System Acknowledgment to be returned to the original sending business process.

Monitoring the processing

From the point where the document is received in the source layer until the acknowledgment from the receiving business process has been received, MailRoom monitors the processing and takes *before and after* images of the document. Using monitoring panels, an administrator can watch the progress, view the document before and after an exit has made changes as well as manually initiate certain MailRoom actions like resend, restart, fail, etc..

Chapter 4. Terminology used in the MailRoom

This chapter provides an introduction to the terminology used in the MailRoom.

Abbreviations

Here are some commonly used abbreviations:

BEC	Back-end communication
BPI	Business programming interface
DI	DataInterchange
M-record	MailRoom record
MDI	Multiple document interchange
MR-layout	Transaction-type id, e.g. SWORDER.
NPT	Non-programmable terminal (3270 device)
PWS	Programmable workstation
SDI	Single document interchange
TP	Trading Partner

Document formats

The MailRoom can process various types of business documents, such as invoices and orders. The primary format is M- and D-records, other recognized formats are XML, SAP R/3 IDOC and EDI (EDIFACT and ANSI X12). Even flat files in other formats can be routed through MailRoom if necessary registrations are done or user exits written.

All processing and routing of documents in MailRoom are depending on the MailRoom registrations and identification of sender, receiver and format contained inside the document in an M-record, see “The M-record” on page 62. If a document is received without an M-record it is necessary for MailRoom to build one. For some source scenarios and well known document types, this can be done automatically in MailRoom supplied source exits. These exits will extract fields from the received document and dynamically build an M-record and if necessary also encapsulate other records in D-records.

If you have other document formats, you must either build the M-record before passing it to BTB or you can write your own source exit. Writing your own source exit is a way to extend MailRoom to understand other document formats, see: “Source exits” on page 68. The received file (or transmission buffer for MQSeries) is passed to the source exit which must return a valid document with M- and D-records.

The document will now be stored in the transport tables as a standard MailRoom document, where the first record is the M-record. The remaining records are data records (first character usually **D**) or special purpose control records (for example DataInterchange C-, E-, I-, and Q-records). One or more documents received within the same syncpoint are considered to be one envelope, which is assigned a unique envelope ID by the MailRoom.

The format support in MailRoom is shown in Table 3 on page 58.

© Copyright IBM Corp. 1992, 2002

Table 3 (Page 1 of 3). Document formats supported by MailRoom

<table>
<tr><td rowspan="3">MailRoom
M- and
D-records</td><td rowspan="2"><pre>MEXTREC00123TPA   TPX   ORDERS
D.....data.....records.....
D.....data.....records.....
D.....data.....records.....
D.....data.....records.....
D.....data.....records.....
D.....data.....records.....</pre></td><td>Sending:
All source scenarios except DI-EDI, SAP and SAP-MQ can be used.</td></tr>
<tr><td>Receiving:
All destination scenarios except DI-EDI, SAP and SAP-MQ can be used.</td></tr>
<tr><td colspan="2">MailRoom M- and D-records is the native MailRoom format. The received document is stored As Is in the MailRoom transport table. The M-record controls the processing and routing in MailRoom.

Read about the M-record in “The M-record” on page 62.</td></tr>
<tr><td rowspan="3">EDI,
EDIFACT,
ANSI X.12</td><td rowspan="2"><pre>UNA:+./ '
UNB+UNOA:1+MAILBOX1:ZZ+MAILBOX2:ZZ+011015:1310+67'
UNH+128+INVOIC:1:902:UN'
BGM+384:TESTINVOICE+0000323 15+011015'
NAD+SU++John Doe:ADDRES'
NAD+ANY+CITYANYWHERE+DOE:ADDRES ¢2'
UNS+D'
LIN+1++++:1'
LIN+2++++:1'
UNS+S'
TMA+207002'
UNT+11+128'
UNZ+1+67'</pre>
Example is EDIFACT. ANSI X.12 is also supported.</td><td>Sending:
The DI-EDI source scenario is normally used. An M-record will automatically be built by the global DI-EDI source exit based on information received from DI, see “BTB standard DI-EDI Source Exit KBASXDP” on page 153.</td></tr>
<tr><td>Receiving:
The DI-EDI destination scenario is normally used.</td></tr>
<tr><td colspan="2">EDI sent to or received from MailRoom via IBM Information Exchange with the DI-EDI scenarios will be translated to or from InHouse by DataInterchange under MailRoom control. The Inhouse format, together with an M-record, is stored in the MailRoom transport table.

It is also possible to use other scenarios than DI-EDI to send and receive EDI to/from MailRoom. The EDI could be sent to MailRoom as a flat file (see below) with an M-record built by a source exit. Translation to InHouse format can then be performed with an exit, see “DataInterchange translation exit KBAGXDP” on page 155. The opposite direction is also possible.</td></tr>
<tr><td rowspan="3">XML</td><td rowspan="2"><pre><Invoice>
  <OrderNumber>AA456</OrderNumber>
  <Date>20010901</Date>
  <Buyer Id="BUYER1">
  <Supplier Id="SUPPLIER1">
  <InvoiceDetails>
    <PartNum>A001</PartNum><Qty>2</Qty><Price>100</Price>
    <PartNum>B033</PartNum><Qty>1</Qty><Price>500</Price>
  </InvoiceDetails>
  <TotalPrice>700</TotalPrice>
</Invoice></pre></td><td>Sending:
All source scenarios except BATCH, DI-EDI, SAP, SAP-MQ and TIE-IMS can be used. It is then necessary to activate an MailRoom supplied source exit to dynamically build an M-record based on defined XML elements, see “BTB XML Processor Source Exit KBASXMP” on page 153.</td></tr>
<tr><td>Receiving:
All destination scenarios except DI-EDI, SAP and SAP-MQ can be used. Use the STRIP-MD function to get the XML document.</td></tr>
<tr><td colspan="2">The XML document will be encapsulated in M- and D-records before it is stored in the MailRoom.

Read about definition of XML documents for BTB in “Defining XML documents for MailRoom” on page 49. For more information about processing XML documents, refer to the Application Programming Guide.</td></tr>
</table>

Table 3 (Page 2 of 3). Document formats supported by MailRoom

<table>
<tr><td rowspan="3">SAP R/3 IDOC</td><td rowspan="2"><pre>EDI_DC   1200000000000009018 30E 69INVOIC012SAPGC0   FIIBMEDI   . . .
E1EDK01   1200000000000009018000001E1EDK01   000000010   GBP
E1EDKA1   1200000000000009018000002E1EDKA1   000000020 RS 1000000010
E1EDK02   1200000000000009018000003E1EDK02   000000020 009VENDOR-INVOIC
E1EDK03   1200000000000009018000004E1EDK03   000000020 01219961215</pre></td><td>Sending:
The SAP or SAP-MQ source scenario is normally used. An M-record will automatically be built by a global source exit based on information in the received SAP control record, see “BTB standard SAP & SAP-MQ Source Exit KBASXSP” on page 154.</td></tr>
<tr><td>Receiving:
Normally the SAP or SAP-MQ destination scenario is used. The SAP control record EDI_DC will automatically be built if it is not available in the document.</td></tr>
<tr><td colspan="2">The SAP R/3 IDOC will be encapsulated in M- and D-records before it is stored in the MailRoom.

If DI-EDI is the source or destination it is possible to use MailRoom supplied document exits to change the length of the record identifier between SAP and DI requirements, see “SAP to DI standard exit KBADXDP” on page 154 and “DI to SAP standard exit KBADXSP” on page 154.

For more information about SAP R/3 IDOCs, refer to the Application Programming Guide.</td></tr>
<tr><td rowspan="3">Flat files</td><td rowspan="2"><pre>This is my record oriented flat file, record 1
This is my record oriented flat file, record 2
This is my record oriented flat file, record 3
This is my record oriented flat file, record 4
This is my record oriented flat file, record 5
This is my record oriented flat file, record 6
This is my record oriented flat file, record 7
This is my record oriented flat file, record 8
My last record...</pre>Flat files are other record oriented files without MailRoom M-record.</td><td>Sending:
All source scenarios except BATCH, DI-EDI, SAP, SAP-MQ and TIE-IMS can be used. A source exit must then be used to dynamically build an M-record.

The EXP-FILE source scenario has a global source exit that will build an M-record based on sender mailbox and message user class, see “BTB standard EXP-FILE Source Exit KBASXFP” on page 153. The sample source exit or a user written one can be used to build an M-record based on file contents or hardcoded values, see “BTB Sample Source Exit KBGXSXP” on page 154.</td></tr>
<tr><td>Receiving:
All destination scenarios except DI-EDI, SAP and SAP-MQ can be used. Use the STRIP-MD function to get the flat file without M- and D-records.</td></tr>
<tr><td colspan="2">The flat file will normally be encapsulated in M- and D-records before it is stored in the MailRoom. A record starting with M would be intrepreted as an MailRoom M-record.

For more information about writing source exits, refer to the Application Programming Guide.</td></tr>
</table>

Table 3 (Page 3 of 3). Document formats supported by MailRoom		
Other formats	`This is a Very Long Buffer sent via MQSeries.....`	*Sending:* The MQ source scenario can be used to receive other buffer formats than the normal MailRoom MQ buffer format. It is necessary to use a user written source unpack exit to split the buffer into records. MailRoom can also cut records at 1999 byte boundary with MQ default unpack exit.
		Receiving: The MQ destination scenario can be used to send other buffer formats than the normal MailRoom MQ buffer format.
	The received buffer must be cut into apropriate records which will be stored in the MailRoom transport tables.	

Source and destination scenarios

These MailRoom components either receive data from a Business process (a source scenario), or send data to a Business process (a destination scenario). Different source and destination scenarios are available, one type for each type of Business process. It is possible to combine any source scenario with any destination scenario. This is done by setting up a MailRoom service, and creating subscriptions to the service for relevant Trading Partners.

MailRoom services

The purpose of a service definition is to combine one or more source scenarios with one or more destination scenarios. Together with the subscriptions (receive and send) the service completely describes the exact source and destination scenarios that exist for that service.

The subscription type on the service describes what kind of scenarios are allowed for the service.

Subscription type:

S TP Sender—Inbound traffic (many-to-one)

A number of Trading Partners (with send subscriptions) can send a document to a Fixed TP Receiver defined on the service. This is traditional inbound. Both simple and extended M-record can be used. The *from TP* must be used in the simple M-record.

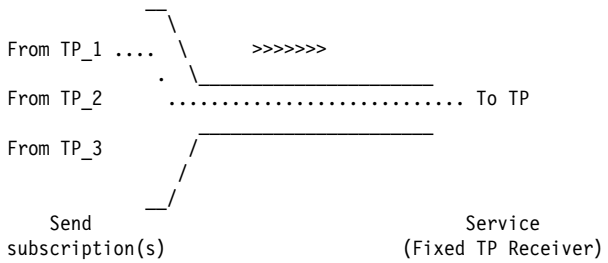

R TP Receiver—Outbound traffic (one-to-many)

One Fixed TP Sender can send a document to one of the Trading Partners (with receive subscriptions). This is traditional outbound. Both simple and extended M-record can be used. The *To TP* must be used in the simple M-record.

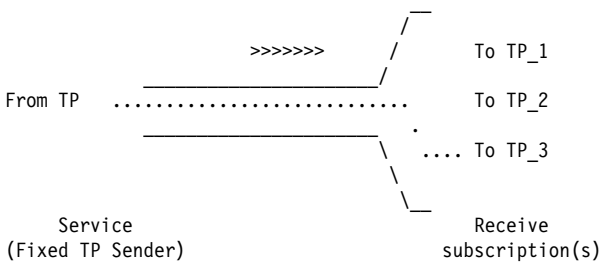

T TP to TP—third party traffic (many-to-many)

One of the *From TPs* (with send subscription) can send a document to one of the *To TP* (with receive subscription). This can be used for third party traffic. Anybody can send to anybody. Only the extended M-record can be used.

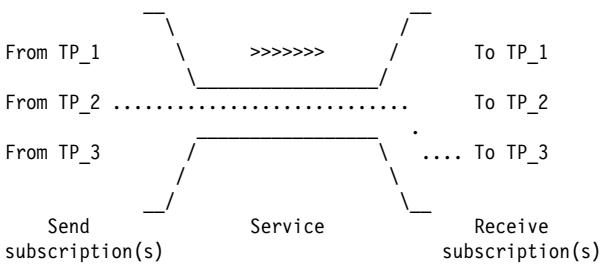

X Extended Routing (Unconditional, Rule-based and Exit-based Fanning)

One of the *From TPs* (with send subscription) can send a document to the MailRoom. Depending on the routing type, a number of *To TPs* will be selected, and a copy of the document will be sent to the selected TPs. Only the extended M-record can be used.

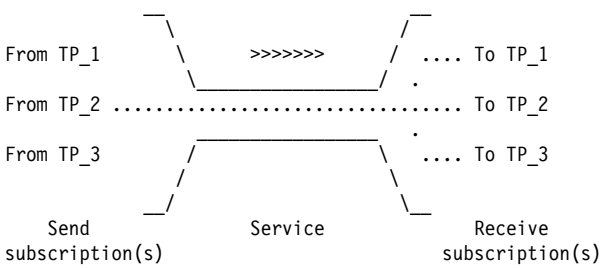

The service contains source and destination specific information. For example, if the source is SAP, the MailRoom needs information on which port number to receive data from, and if destination is DataInterchange, the MailRoom will need to know the DI format ID. Depending on the subscription type and scenarios, some of the information can be supplied on the subscriptions. Once a service is defined, it is available for the Trading Partners to subscribe to.

Which service to use is decided from the BTB control record.

The corresponding registration dialogs are built dynamically, depending on the specific scenario. Only the input fields that are relevant for each situation appear on the panel.

The M-record

The M-record is a MailRoom record with its own layout (MR-layout). The M-record is stored in the MailRoom databases, one M-record for each document received. When the requester invoking the MailRoom is a user-written program, it is the responsibility of the business process to provide an M-record with every document passed. When the requester is an application product, such as DataInterchange, the source scenarios will create an M-record for each document and store it with the data. The way to create an M-record depends on the subscription type and the source scenario.

In the case of DataInterchange being the requester calling a source scenario, the information in the DI control record will be used.

There are two types of M-record:

Simple Used when the subscription type on the service is *S*(sender) or *R*(receiver).

The keys necessary to interface with the MailRoom are:

- Country code
- Trading Partner number
- MR-layout

Extended

Used when the subscription type on the service is *T* (Third Party Traffic) or *X* (Extended Routing).

The keys necessary to interface the MailRoom are:

- Country code
- To Trading Partner number
- From Trading Partner number
- MR-layout

These fields are the most important fields in the M-record. To a developer, the MR-layout describes the data that is parsed or received. To an administrator the MR-layout is used in different ways, such as:

- When defining an Expedite/CICS source, the MR-layout acts as the message user class
- For a DI destination, the MR-layout acts as the DI in-format

An example of how the simple M-record in the input data must match a service subscription so that the MailRoom is able to decide the destination scenario is shown in Figure 46 on page 63.

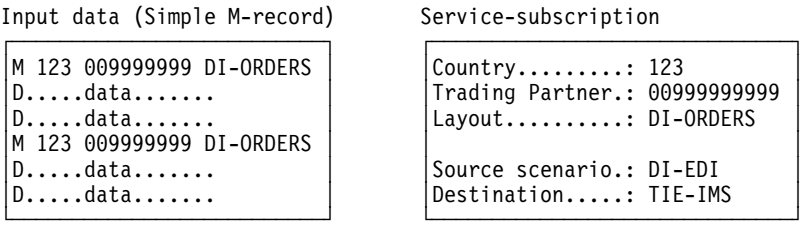

Figure 46. Simple M-record and Service subscription

For more information about building an M-record, refer to the *Application Programming Guide*.

Source envelopes

Everything that is passed to the MailRoom in one invocation (one API call) is considered to be in one source envelope. The source envelope is the *commit entity* when data enters the MailRoom.

Depending on the sending system, the source envelope can contain Multiple or Single Documents.

When the Trading Partner represents the source, the documents will be from the same Trading Partner, but they can have different format IDs and services specified.

Wherever possible the MailRoom supports MDI.

Derived envelopes

For every different MR-layout found in the source envelope, a *derived envelope* is created. If a source envelope consists of 10 documents, with five M-records indicating one MR-layout and the remaining indicating another, then two derived envelopes are created with five documents in each.

Destination envelopes

For the destination scenarios it is relevant to group together many derived envelopes. This is done by having the Scheduler create *destination envelopes*, linking (optionally) many derived envelopes.

The grouping of derived envelopes differs, depending on circumstances:

- For the DI destination scenario, the destination envelope will contain all the data (*different MR-layouts*) for *one* Trading Partner.
- For the Batch destination scenario, the destination envelope will contain all derived envelopes with the *same MR-layouts*, but from *different* Trading Partners.
- For all other destination scenarios, the documents are group in destination envelopes where the Trading Partner, the layout and sender all are the same.

Documents in the same destination envelope will be sent from MailRoom in the same order as they are recieved by MailRoom

Requests

In the MailRoom online status dialogs a request is synonymous with a document. If a document is fanned to multiple destinaions it will appear in MailRoom online status dialogs as one request for each destination (receiver).

Envelope ID

The envelope ID for a source envelope consists of a 12—byte alphanumeric field ending with three blanks.

The envelope ID for a derived envelope consists of the same first nine bytes as the source envelope it is associated with, suffixed with *001-mmm*.

The envelope ID for a destination envelope consists of the same first nine bytes as the source envelope it is associated with, suffixed with *nnn-ZZZ*. The scheduler continues with the first free suffix from the same suffix-range as used for the derived envelopes.

Note: If the scheduler finds more than one derived envelope that can be linked to the same destination envelope, the keys will differ.

MailRoom processing

A simplified overview of the processing in the MailRoom is shown in Figure 47.

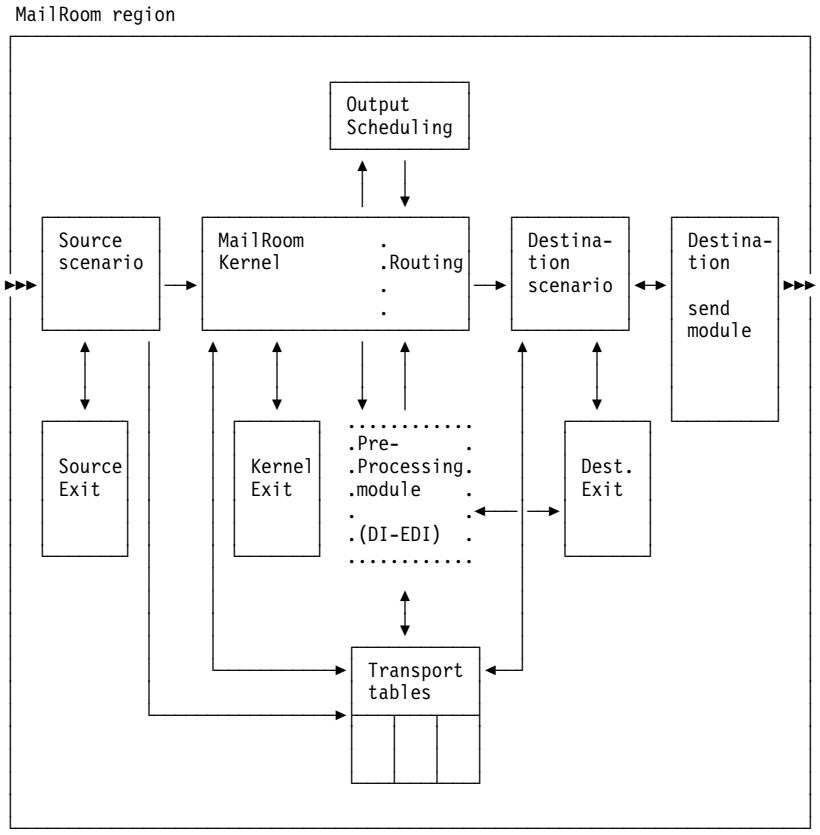

Figure 47. Processing in BTB MailRoom

Source scenario

1. Documents are received in various ways and stored in the MailRoom transport table.

   See Chapter 7, “Setting up source scenarios” on page 85 for detailed descriptions of the source scenarios supported in BTB MailRoom.

2. MailRoom checks whether a Source Exit is defined for the scenario. If one is defined, it is executed.

   See “Defining Source Exits in MailRoom” on page 34 for detailed descriptions of the Source exit definition.

3. The MailRoom kernel is started.

Kernel

1. Splits the source envelope into one or multiple derived envelopes—one derived envelope for each layout or new receiver.
2. If Extended Routing applies, a copy of the document is created for each Trading Partner selected as receiver.
3. Calls the kernel exit if one has been specified on the service.
4. Optionally starts preprocessing if the requested destination is DI-EDI. This will translate the documents to EDI and afterwards return control to the MailRoom kernel.
5. If output scheduling is specified on the MailRoom service or subscription, the current time is checked against the schedule and further processing can be suspended.
6. When the calculated time from the output schedule expires, the kernel is triggered again.
7. The derived envelopes are assigned to destination envelopes. Normally only one derived envelope for each destination envelope. But if scheduling has queued multiple derived envelopes for the same destination to be released at the same time, they will be placed in one destination envelope.
8. The destination scenario is triggered for every destination envelope.

See also, “The kernel component” on page 74.

Destination scenario

1. Reads all documents in the destination envelope.
2. Calls the destination exit if one has been specified on the service or subscription.
3. Sends the documents to the destination.

See Chapter 8, “Setting up destination scenarios” on page 115 for detailed descriptions of the destination scenarios supported in BTB MailRoom.

MailRoom priority

The priority level on the service is used to control the internal processing of documents in the MailRoom when many documents arrive at the same time.

Documents in the same priority class will be served on a *first come, first served* basis, on the entry to various MailRoom processes. This means that a high arrival rate might temporarily build a queue of documents waiting to be processed. This is normal processing, and the queue will disappear when the arrival rate goes returns to normal.

By specifying High priority on services with important documents, these documents will be processed by another set of processes and queues than the Normal and Low priority documents. These important documents will then be processed before other documents in the low priority queues.

Note: Priority level should be used with care. If all services are defined with high priority, benefits are minimal. Here are the priority values:

Blank Normal or low priority. This level should be sufficient for most services.

High High priority. Some services can take advantage of high priority, if the sender is waiting for an instant reply.

Extended Routing

The Extended Routing scenario lets you dynamically determine who should receive a document. Using extended rouning, one or more Trading Partners can receive the same document. When a document is sent to more than one Trading Partner, it is called *Fanning*.

The Extended Routing Type on the service determines how the appropriate *To Trading Partners* are selected during the processing of a document.

All the possible *To TPs* must have a Receive subscription. The receive subscriptions can be of different types, that is, one can receive from MQ and another from MAIL or FAX.

These Extended Routing Types are supported:

Fanning Unconditional fanning. All Trading Partners with a Receive subscription will get a copy of the document.

Exit Exit based fanning. A user-written exit is called. Based on its own logic and the contents of the document, it can return a number of *To TPs*, which receive a copy of the document.

The Exit must be coded according to the instructions in *Application Programming Guide*.

Rule Rule-based fanning

If rule-based fanning applies, a rule decision module is invoked. This decision module will, based on the contents of the document and rules in a specified rule set, select who should receive a copy of the document. The original *To TP* from the extended M-record can either be respected or ignored, and contents of a specific record can trigger a copy to be sent to a Trading Partner.

Rules are grouped in a rule set, and the rule set is referenced on the service when enabling Extended Routing—Rule-based Fanning.

The rules used by Rule-based Fanning are created on the rule panels (fastpath command **RULES**). From here you can insert, delete, or select rule sets, and subsequently maintain all the rules in the rule set. You can select, insert, delete, copy, and modify a rule.

Values for a Value Set can either be maintained using online panels or by sending a document to the MailRoom (see the *Application Programming Guide* for a description of the document format and the required MailRoom setup).

Here are the rule types:

TP—Respect Trading Partner rule

Instructs the rule decision process to respect the Trading Partner ID from the M-record in the document being processed. The result is that the *To TP* from the M-record is added to the final list of Trading Partners that is returned to the MailRoom for further processing.

SS—Substring rule

Instructs the rule decision process to inspect the document lines, and compare the text extracted from a specific position in the document, with a text string specified in the substring.

A substring consists of a start position, length, operator and the text string to be compared with the document. Up to five substrings can be specified for an SS—rule, and all substrings should be fulfilled before the SS—rule is fulfilled.

If the SS—rule is fulfilled, the Trading Partner or Distribution list (see DI—rule) specified is activated and added to the final list of Trading Partners that is returned to the MailRoom for further processing.

VS—Value Set rule

Instructs the rule decision process to inspect the document lines, and compare the text extracted from a specific position in the document, with a text string specified in the substring. Then another substring is built, and a look-up performed in a Value Set. If there is a hit the rule is considered fulfilled.

A substring consists of a start position, length, operator and the text string to be compared with the document. On a VS—rule, up to two substrings can be specified to locate the record, and three substrings can be specified to build the string to look-up in the Value Set.

If the VS—rule is fulfilled, the Trading Partner or Distribution list (see DI—rule) specified is activated and added to the final list of Trading Partners that is returned to the mailroom for further processing.

LE—Logical Expression rule

Instructs the rule decision process to evaluate the status (true or false) of two other rules. The LE—rule specifies two rule numbers and an operator. The operator can be *AND* or *OR*. The LE—rule will be fulfilled if:

```
First rule referenced is fulfilled
          AND/OR
Second rule referenced is fulfilled
```

If the LE—rule is fulfilled the Trading Partner or Distribution list (see DI—rule) specified is activated and added to the final list of Trading Partners, that is returned to the MailRoom for further processing.

DI—Distribution list rule

The DI—rule specifies up to five Trading Partners. When a Distribution list is specified on an SS—rule or LE—rule, and this rule is fulfilled, the list is activated and each of the Trading Partners in the list will be added to the final list of Trading Partners that is returned to the MailRoom for further processing.

If extended logging is enabled on the service, the rule decision module will create a trace giving a complete overview of the decision process (matching document with rules). The trace will be available as a trace file on the MailRoom list of events for the request.

MailRoom Exits

As shown in the MailRoom overview (see Figure 45 on page 54), you can call a user exit at certain points during MailRoom processing.

On the MailRoom registrations you can specify that an exit should get control of a document during processing.

Exits are called to enable specific, application related processing to be performed while the data is within MailRoom responsibility, for example building routing information, data validation, data editing, and reconciliation.

When an exit is called by the MailRoom, application data will be made available in one or more CICS temporary storage (TS) queues. The exit can then read and potentially update the document.

Source exits

The MailRoom source layer has two exit points which can be used to reblock or enrich a document before it is saved in MailRoom transport table. Selection of a source exit is depending on the identity of the sender (name/queue/id/etc.) and the source type. An exit is considered *specific* if it is only invoked for a single sender. An exit is considered *global* if it is invoked for all senders of a source scenario.

Unpack Exit Gets control during the source processing of a document, immediately after data is received and just before a Source Exit. The Unpack Exit should unpack the passed buffer into record format. A Source Unpack Exit can reject a document if the format is unrecognized. The Unpack Exit is available

for the MQSeries based scenarios (MQ, SAP-MQ, TIE-MQ) where data is received as one long buffer.

Source Exit Gets control during the source processing of a document, immediately after data is received. A Source Exit can reject a document if the format is unrecognized.

While the two Source Exits can change data, the intended purpose is only to split the buffer into smaller records and to dynamically build the M-record.

The source exits are defined in the source exit table, see "Defining Source Exits in MailRoom" on page 34.

Both user written source exits and MailRoom supplied source exits can be used. The MailRoom supplied source exits can be found in "MailRoom supplied source exits" on page 153. User written source exits must be coded according to the instructions in the *Application Programming Guide*.

Document exits

The MailRoom kernel and destination layer also have exit points called document exits which can be used to read and potentially update the document.

Exits are called once per Document (Request) in the Envelope.

Kernel Exit Gets control during the kernel processing of a document, immediately after the security check has been performed. A Kernel Exit can read or update the document and if necessary *FAIL* or *LOCK* it to stop further processing.

The exit can also insert up to five events as MailRoom meta data. These event records can potentially be used to store results of the exit processing. The events can be viewed using standard on-line dialogues.

Destination Exit Gets control during the destination processing of a document, immediately before further sending or translation. A Destination Exit can read or update the document and if necessary *FAIL* it to stop further processing.

The exit can also insert up to five events as MailRoom meta data. These event records can potentially be used to store results of the exit processing. The events can be viewed using standard on-line dialogues.

Display Exit Gets control during on-line screen display before a specific version of a document has been selected for viewing. Such an exit is selected from a list at display time. The exit can reformat the document to give a better visual presentation of the document on the screen. The result is not saved.

A kernel or destination (document) exit is defined on the MailRoom service or subscription.

Both user written document exits and MailRoom supplied document exits can be used. The MailRoom supplied document exits can be found in "MailRoom supplied document exits" on page 154. User written document exits must be coded according to the instructions in the *Application Programming Guide*.

Extended logging

Extended Logging is a way to select how much tracing information and events will be created by the MailRoom during processing.

These are the possible values:

Blank Normal logging. Only the most relevant events will be logged, and no processing trace will be created for Extended Routing. This is the recommended value for production.

Verbose Extended logging. The MailRoom will create more events, and during Extended Routing, a processing trace will be created and saved.

MailRoom databases

The MailRoom tables can be divided in three groups:

Transport Tables Contain the data passing through the MailRoom.

Status Tables Contain control data. It is stored there for as long as the data is within the MailRoom responsibility. The online monitor dialog is built on these tables.

Audit Tables Contain audit information logged in the source scenarios. Expedite/CICS and DataInterchange also log in these tables before data reaches the MailRoom. The audit reconciliation reports are built on these tables.

MailRoom archiving

The archiving function consists of five groups of logically-linked tables. One of the groups handles the Transport tables and for this group the archiving function can either delete data from tables and archive the deleted data in a sequential data set, or simply delete data from tables.

For the other four groups the data is deleted from the tables and archived in sequential data sets.

The five groups of tables are:

- MailRoom Transport tables group
- ASCA tables group
- Error Message table group
- Export table group
- Administration table group

For more information about the archiving function, refer to the *Installation Guide*.

Chapter 5. Functionality of the MailRoom components

This chapter describes the functionality of these components:

- Source scenarios
- Kernel
- Destination scenarios

Source scenarios

A source scenario in BTB is invoked from a Business Process, which passes data to the source scenario.

Format of input data

The data passed to a source scenario can be flat files, EDI documents translated to an in-house format, or documents in free format. Depending on the scenario type, one or multiple documents can be received upon one invocation. Documents received in the same invocation are regarded as one source envelope.

Envelopes can contain one or more documents, as indicated by M-records. The MailRoom does not modify the data. Logic is dependant upon a scan for M-records to split into MailRoom documents. Only application exits (source, kernel or destination) can modify the data.

Functions of the source scenarios

- Receive the data.
- Check and optionally execute source exits.
- Assign a source envelope ID for the passed data.
- Split the data into documents. How the splitting is done will depend on the source scenario type, which is specified either on the service or on the subscription.
- Store the documents in the MailRoom transport tables for further processing. When stored, each document will consist of one M-record and one or multiple D-records.
- Perform necessary logging used for reconciliation reports.
- Start the MailRoom kernel.

Source scenario types

These source scenarios are available to Business Processes accessing BTB:

APPC	Files received from APPC client (OS/2 or Windows or AIX)
BATCH	Batch input to MailRoom
DI-EDI	EDI from DataInterchange
EXP-DOC	Documents from Expedite/CICS
EXP-FILE	Single files from Expedite/CICS
MQ	MQSeries
PGM	Input from programs running in CICS environment
SAP	SAP/R3 input to MailRoom
SAP-MQ	SAP/R3 IDOCs via MQSeries
TCPIP	Files received from a TCP/IP client (OS/2 or Windows or AIX)

© Copyright IBM Corp. 1992, 2002

TIE-IMS Transactions from TIE running under IMS
TIE-MQ Transactions from TIE running under IMS via MQSeries.

APPC

A business application on the client calls the MailRoom write API with a file containing the document. The MailRoom write API reads the document from the file and starts communication with the MailRoom APPC receiver via SNA. The APPC receiver splits the data into one or multiple documents, which is inserted in the MailRoom transport tables and processed by the MailRoom.

Multiple document interface (MDI) is supported.

BATCH

A Batch job can use the BTB MailRoom Batch Utility to feed documents into the MailRoom.

The Batch Utility inserts data into the transport tables for further logging and processing. Data inserted in one *run*, is regarded as one source envelope. A scanner is started by the Timer, catches the Batch envelopes, and triggers the MailRoom

The source envelope can contain one or more documents—each document must begin with an M-record followed by data records. The data records can be prefixed with any character except an *M*. The MailRoom does not modify the data in any way. Logic is dependant on a scan for M-records to split into MailRoom resets.

MDI is supported.

DI-EDI

EDI envelopes are sent through Information Exchange to Expedite/CICS and further on to DataInterchange through continuous receive. In DataInterchange the envelopes are de-enveloped and translated to in-house format—each document in the envelope will contain one control record and many data records.

The MailRoom response program is called to get the envelope into the MailRoom transport table for further logging and processing.

The input standard for DataInterchange can be any type DataInterchange can translate (for example, EDIFACT or ANSI-X12).

MDI is supported.

EXP-DOC

A file containing one or multiple documents is sent through Information Exchange to Expedite/CICS where a single or continuous receive profile is set to call a MailRoom response program to get the documents into the MailRoom transport table for further logging and processing.

MDI is supported.

EXP-FILE

A flat file is sent through Information Exchange to Expedite/CICS where a single or continuous receive profile is set to call a MailRoom response program to get the file into the MailRoom transport table for further logging and processing.

The response program creates an M-record, and prefixes all records in the file with a *D*, as data records.

Single document interface (SDI) only.

MQ

An MQ application (on any MQ-supported platform) can format a document into MailRoom MQ format and perform an MQPUT call to send a document through the local MQSeries queue manager to MailRoom. Here it is inserted in the transport tables and processed by the MailRoom.

MDI is supported.

As part of BTB a MQ batch utility can be used to format documents from a flat file in BTB file format and put them to an MQSeries queue, which can be set up to trigger the MailRoom. This utility allows for simpler transmission of documents from a remote MVS system.

For more information about the utility, refer to the *Application Programming Guide*.

PGM

The PGM scenario is used by a Business application located in a local or remote CICS. The Business application performs an EXEC CICS LINK to the MailRoom write API to get a source envelope into the MailRoom.

MDI is supported.

SAP

A MailRoom AIX program is running on a server scanning for files in a SAP directory. When a new file is detected, it is transmitted through TCP/IP to the MailRoom CICS, where it is recreated as a file of multiple documents, inserted in the transport tables and processed by the MailRoom.

MDI is supported.

SAP-MQ

A MailRoom AIX program is running on a server scanning for files in a SAP directory. When a new file is detected, it is transmitted via MQSeries Link for R/3 to the MailRoom CICS, where it is recreated as a file of multiple documents, inserted in the transport tables and processed by the MailRoom.

MDI supported.

TCPIP

The business application calls the MailRoom TCP/IP write API with a document in a file. The MailRoom API reads the document and initiates communication with the MailRoom CICS. The MailRoom TCP/IP receiver splits the document into one or multiple documents, which is inserted in the MailRoom transport tables and processed by the MailRoom

MDI is supported.

TIE-IMS

The MailRoom IMS response program is triggered when a Business application has performed a TIE-WRITE. The response program performs a TIE-READ, and inserts the documents into the transport tables.

For compatibility reasons, each envelope is split with an asterisk record.

MDI is supported.

TIE-MQ

The MailRoom TIE-MQ IMS response program is triggered when a Business application has performed a TIE-WRITE. The response program performs a TIE-READ, and formats the document into MailRoom MQ format. It then performs an MQPUT call to send the document through the local MQSeries queue manager to MailRoom. Here it is inserted in the transport tables and processed by the MailRoom.

MDI is supported.

The kernel component

Security checking

- Check that Service/Trading Partner send subscriptions for all documents in the source envelope are correct.
- Create derived envelopes as necessary.
- Call kernel exits, if specified on the service, to make application related processing on documents. For example data validation and data editing.
- Copy documents if fanning applies.
- Insert a MailRoom request for every document.
- Update counters in the derived envelope for each document that passes or fails security check.
- Update counters on the source envelope for each derived envelope created.
- If a derived envelope is destined for DataInterchange translation, then start the preprocessing layer.
- Otherwise pass the derived envelopes to Routing.

Preprocessing

In some cases *preprocessing* of documents will be necessary. For example, documents in envelopes destined for DataInterchange will be translated as they arrive at the MailRoom. They will later be enveloped and sent when the scheduled time expires.

Note: Documents will be passed for translation to DataInterchange one by one, and will be associated in DataInterchange by using the derived envelope ID as a DI—batch ID on the translate command.

For each translated document, DataInterchange returns an Audit file, and the MailRoom will save this file with the request. If a translation fails, a note is sent to SPOC and other documents in the derived envelope continue to be processed as usual.

The number of documents that were translated successfully is registered on the derived envelope. The number that were not successfully translated is also recorded.

When all documents are translated (good or bad), the derived envelope is passed to Routing for further processing.

Kernel exit

If an application kernel exit is assigned, this processes the document.

Routing

Checks if Output Scheduling is established for this Service. If not, the envelope is passed to the correct destination scenario.

If yes, it is passed to Output Scheduling.

Output Scheduling

The schedule part checks if schedule time is due. If schedule time is due, the correct destination scenario is invoked.

If schedule time is not due, the derived envelope and related entries in the Transport Index table are marked with status *SCHDUL* and the specific time. Process is temporarily stopped or ended, waiting for the scheduling scanner to pick up and trigger the sending.

Back-end availability: The scheduling attribute can also be used to register expected (Service Level—agreed) back-end availability.

By implementing a *manual override* on the schedule attribute, an administrator can also temporarily stop a service, in case a temporary operational problem. The result is that a service, that *should* be operational and where the MailRoom would unsuccessfully try to access a back-end server that is *down*, is instead stopped *until further notice*. This will reduce the number of error messages sent to the SPOC.

Destination scenarios

The destination layer consists of different destination scenarios, that is, the different ways and methods by which the data in the Transport tables can be passed or pushed onwards for further processing.

Based on the service receive subscription, the MailRoom assigns a schedule for all derived envelopes for the service. If no such schedule is assigned for a derived envelope, the documents will be sent to the destination immediately. If a schedule is assigned, the MailRoom will schedule the documents for the time frame specified in the schedule, and a schedule scanner will create destination envelopes and send the documents when the time is expired.

Before sending the document or envelope to the receiving Trading Partner the destination scenario will trigger a destination exit if one is defined on the service or subscription.

Destination scenario types

These destination scenarios are available to Business Processes accessing BTB:

APPC	Documents to a APPC server
BATCH	Batch Output from the MailRoom
DI-EDI	EDI to DataInterchange
EXP-DOC	Files containing documents to Expedite/CICS
EXP-FILE	Files to Expedite/CICS
FAX	Documents to a FAX
MAIL	Document sent as e-mail or a file
MQ	Documents to Trading Partner via MQSeries
NULL	Documents to a dummy destination
PGM-CICS	Documents to a CICS program
SAP	Intermediate documents to SAP via TCP/IP
SAP-MQ	Intermediate documents to SAP via MQSeries
TCPIP	Documents to a TCP/IP server
TIE-IMS	Transactions to TIE on IMS systems
TIE-MQ	Transactions to TIE on IMS systems, sent via MQSeries

APPC

The MailRoom APPC send program sends the document to the APPC MailRoom daemon on the server. The APPC MailRoom daemon writes the document to a file, which can be processed by a user application.

SDI only.

BATCH

A Batch job using an BTB MailRoom Batch Utility reads the documents from the MailRoom. The documents stay *indefinitely* in the MailRoom until picked up by the Batch utility.

The documents are sent *as is* with a Control record followed by data records.

If the Utility is used, all documents, matching the search criteria given in a UTIL—member are saved in the flat file defined in the JCL.

MDI supported.

DI-EDI

Documents are to be sent to an Information Exchange mailbox through Expedite/CICS and DataInterchange. The translation (and storage) into the DataInterchange repository is performed as *preprocessing*, immediately data enters the MailRoom. The enveloping and sending is performed according to specified schedule.

MDI supported.

EXP-DOC

Files containing documents are sent to an Information Exchange mailbox through Expedite/CICS as a flat file. (The MailRoom will trigger Expedite/CICS according to schedule)

MDI supported.

EXP-FILE

Files are sent to an Information Exchange mailbox through Expedite/CICS as a flat file. The MailRoom will trigger Expedite/CICS according to the schedule.

Before sending, the M-record and the first char (*D*) are removed from the data records.

SDI only.

FAX

Data will be sent to the FAX number registered on the Service or Subscription, where an attention can also be specified.

An exit can be used to format the document into letter format if this has not already been done by the sender.

SDI only.

MAIL

The data will be sent as e-mail or a file to the electronic address specified on the subscription. The address can be a traditional user ID at node ID, an Internet e-mail address or a Tools disk.

SDI only.

MQ

The MailRoom in CICS initiates a transmission of the destination envelope to the MQ queue ID specified on the service or subscription. The MQ queue manager on the local CICS routes the document to the remote queue ID controlled by the remote MQ queue manager, which triggers the necessary local processes.

SDI only.

As part of BTB a MQ batch utility can be used to read the documents from the MQSeries queue and write them to a flat file in BTB file format. This utility makes it simple to read a document in BTB MQ format from a MQSeries queue on a remote MVS system and write the document into a flat file.

For more information about the utility, refer to the *Application Programming Guide*.

NULL

The data will be processed by the MailRoom according to the specification on the service. The data will remain in the MailRoom and no send is performed. This is useful in testing, where you do not want the document to be send.

SDI only.

PGM-CICS

A CICS program will be invoked by the MailRoom via a local or remote (as defined in CICS) CICS transient data (TD) queue.

The CICS program performs an EXEC CICS LINK to the MailRoom read API in order to get the document.

SDI only.

SAP

A MailRoom AIX agent is running on a server listening to a TCP/IP port. The MailRoom in CICS initiates a transmission of the destination envelope to the IP address and port specified on the service or subscription (Socket Interface for CICS is used). The AIX program receives the documents, dynamically generates a file name and places the IDOC in a SAP directory on the hard disk and triggers SAP.

SDI supported.

SAP-MQ

The MailRoom in CICS initiates a transmission of the destination envelope to the MQSeries queue ID specified on the service or subscription. The MQSeries queue manager on the local CICS routes the document to the remote queue ID controlled by the remote MQSeries queue manager located on the AIX system. The IDOC document is saved in a SAP directory on the hard disk and SAP is triggered.

SDI supported.

TCPIP

A MailRoom OS/2 or Windows or AIX agent is running on a server listening to a TCP/IP port. The MailRoom in CICS initiates a transmission of the destination envelope to an IP address and port specified on the service or subscription (Socket Interface for CICS MailRoom agent is used). It will receive the documents, dynamically generate a file name and place the file in a directory on the hard disk. If specified in the setup the file name will be passed to a user application on the server.

SDI supported.

TIE-IMS

A MailRoom IMS transaction is triggered with a document key. The IMS program reads the document from the Transport table and performs a TIE—WRITE. The envelope is written to TIE *as is* with one Control record followed by data records.

SDI only.

TIE-MQ

The MailRoom in CICS initiates a transmission of the destination envelope to the MQSeries queue ID specified on the service or subscription. A system control structure is appended to the data, containing the TIE Application and BTX. The MQSeries queue manager on the local CICS routes the document to the remote queue ID controlled by the remote MQSeries queue manager, which triggers the IMS response program. This program reads the document from the MQSeries queue and performs a TIE—WRITE to the Application and BTX in the appended control record. The envelope is written to TIE *as is* with the Control record, the M-record and the data records.

SDI only.

Chapter 6. MailRoom acknowledgment settings

When you set up the services for data passing through the MailRoom, you must also decide how far the data sent from the MailRoom should be monitored. For some destinations it will be enough to know that the sending was successful, and for other destinations you will need to know if the data was successfully received and processed by the server application.

There are four acknowledgment levels:

Level X The document has been sent successfully from the MailRoom. This is only relevant for DataInterchange when sending to a Trading Partner that is using another value-added network (VAN).

Level *X* lets the MailRoom set the transaction in terminal state (FINISH) in the MailRoom when the transaction reaches status *Send requested* in DataInterchange (that is, when Expedite/CICS has responded OK back to DI).

Level 0 The document has been sent successfully from the MailRoom.

For DataInterchange this means that the document has been accepted by the network.

Level 1 The document has been received by the server application, but it has not yet been processed. For TIE-IMS and TIE-MQ, level 1 indicates that the document is in TIE.

Level 2 The server application has processed the document and sent a final acknowledgment back to the MailRoom

The final acknowledgment will be an indication of whether the document was processed successfully or not.

When this level is specified, it is the responsibility of the server application to call the MailRoom acknowledgment API to finish the monitoring. For information about calling this API, refer to the *Application Programming Guide*.

Acknowledgment level descriptions

APPC

Level	Description
X	N/A (If specified, it will be interpreted as level 0)
0	The document has been written to a file on the receivers machine
1	N/A (If specified, it will be interpreted as level 0)
2	Business application has processed the document and sent a final ACK to MailRoom

© Copyright IBM Corp. 1992, 2002

BATCH

Level	Description
X	N/A (IF specified, it will be interpreted as level 0)
0	The document is ready to be read by the batch utility
1	The document has been read by the batch utility
2	N/A (IF specified, it will be interpreted as level 1)

DI-EDI

Level	Description
X	Status *Send Requested* reached in DataInterchange, for example Expedite/CICS has received the data.
0	The document is in the sender's IE mailbox
1	The document is in the receiver's IE mailbox
2	A functional acknowledgment has been received for this document

EXP-FILE and EXP-DOC

Level	Description
X	N/A (IF specified, it will be interpreted as level 0)
0	The document has been sent to sender's IE mailbox.
1	N/A (IF specified, it will be interpreted as level 0)
2	N/A (IF specified, it will be interpreted as level 0)

FAX

Level	Description
X	N/A (IF specified, it will be interpreted as level 0)
0	The document has been sent
1	N/A (IF specified, it will be interpreted as level 0)
2	N/A (IF specified, it will be interpreted as level 0)

MAIL

Level	Description
X	N/A (IF specified, it will be interpreted as level 0)
0	The document has been sent
1	N/A (IF specified, it will be interpreted as level 0)
2	N/A (IF specified, it will be interpreted as level 0)

MQ

Level	Description
X	N/A (If specified, it will be interpreted as level 0)
0	The document has been written to the MQ queue
1	Remote MQ queue manager has sent a technical acknowledgment
2	The server application has processed the document and sent a final acknowledgment to the MailRoom

NULL

Level	Description
X	N/A (If specified, it will be interpreted as level 0)
0	The document has been processed to destination point
1	N/A (If specified, it will be interpreted as level 0)
2	N/A (If specified, it will be interpreted as level 0)

PGM-CICS

Level	Description
X	N/A (IF specified, it will be interpreted as level 0)
0	The document key has been written to a TD-queue
1	The document has been read by the MR read API
2	The server application has processed the document and sent a final ACK to MailRoom

SAP

Level	Description
X	N/A (IF specified, it will be interpreted as level 1)
0	N/A (IF specified, it will be interpreted as level 1)
1	SAP has got the document in the SAP files
2	N/A (IF specified, it will be interpreted as level 1)

SAP-MQ

Level	Description
X	N/A (IF specified, it will be interpreted as level 0)
0	The document has been written to the MQ queue
1	Remote MQ manager has sent a technical ACK.
2	N/A (IF specified, it will be interpreted as level 0)

TCPIP

Level	Description.
X	N/A (IF specified, it will be interpreted as level 0)
0	The document has been written to a file on the receivers machine
1	N/A (IF specified, it will be interpreted as level 0)
2	The server application has processed the document and sent a final ACK to MailRoom

TIE-IMS

Level	Description
X	N/A (If specified, it will be interpreted as level 0)
0	The document has been written to TIE
1	TIE is able to start a acknowledgment transaction
2	The server application has processed the document and sent a final ACK to MailRoom

TIE-MQ

Level	Description
X	N/A (If specified, it will be interpreted as level 0)
0	The document has been wriiten to MQ and passed to TIE
1	MQ was able to send the document and TIE is able to start an acknowledgment transaction
2	The server application has processed the document and sent a final ACK to MailRoom

Chapter 7. Setting up source scenarios

This chapter helps you to set up the source scenarios.

APPC sources

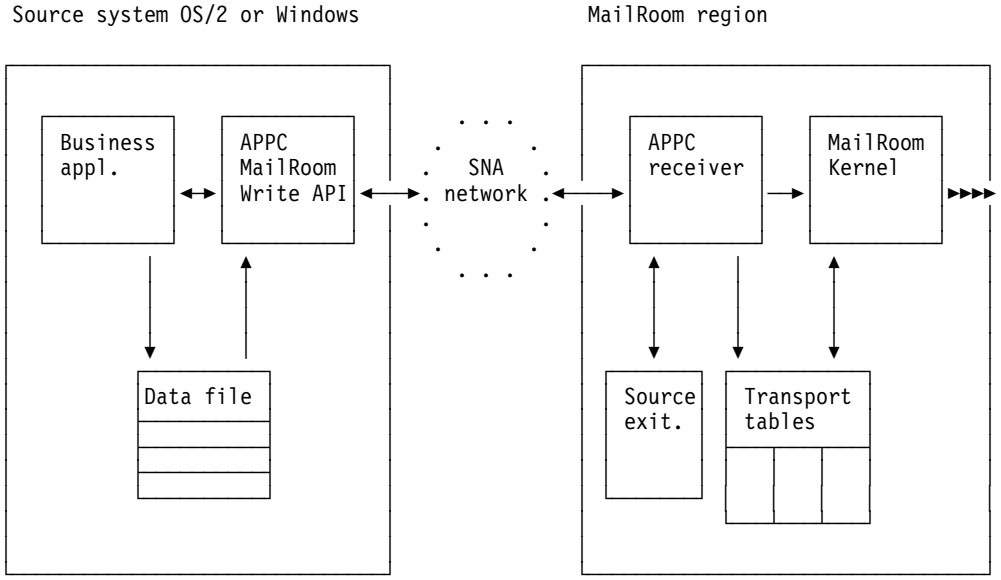

Flow

1. A Business application calls the APPC MailRoom write API with a document in a file.
2. The MailRoom write API reads the document from the file and starts communication with the APPC receiver via SNA.
3. The APPC receiver:
   a. Receives the data from SNA network.
   b. Execute optionally Source Exits.
   c. Splits the data into one or multiple documents using the M-record as separator.
   d. Saves the documents in the MailRoom tables as a source envelope.
   e. Logs audit information in a Audit file.
   f. Starts the MailRoom kernel.
   g. Passes the created source envelope key back to the Business application.
4. The MailRoom kernel processes the envelope as described in “MailRoom processing” on page 64.

© Copyright IBM Corp. 1992, 2002

The input file

The input file can consist of one or many documents. Each document must start with an M-record.

The maximum length of each data record is 2000 bytes.

Enable the APPC source scenario

Perform these steps:

1. Define a service where the source is *APPC*.

   Source type and source-related information must be entered either on the service or on the send subscription depending on subscription type and source type.

   ```
   Source Scenario. . . . . APPC
   ```

2. Add the service to the same agreement set as used for the Trading Partner.
3. Make a send subscription for the Trading Partner to the service.

BATCH sources

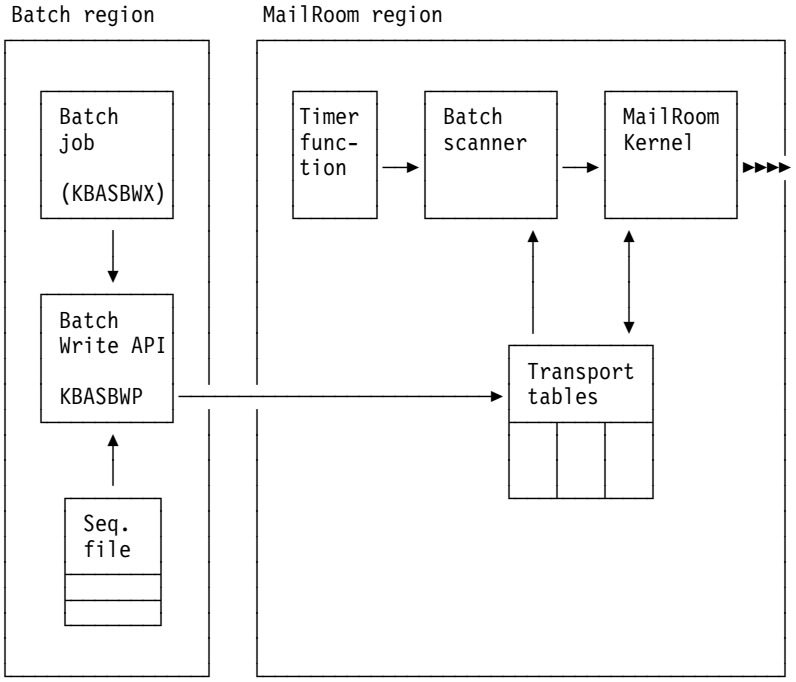

Flow

1. A batch job executes the batch write API.
2. The batch utility:
   a. Reads the sequential file.
   b. Splits it into documents using the M-record as separator.
   c. Inserts them as a source envelope into the transport table.
3. Based on an entry in the Working Criteria table, the timer function in MailRoom triggers the batch scanner.

4. The batch scanner searches for all new source envelopes inserted from batch, writes audit information to the audit log file and starts the MailRoom kernel for each new envelope found.
5. The MailRoom kernel processes the envelope as described in “MailRoom processing” on page 64.

Note, Source Exits is not available for source scenario Batch, instead MQ Batch utility can be used.

The input file

The input file can consist of one or many documents. Each document must start with an M-record.

The maximum length of each data record is 2000 bytes.

Enable the BATCH source scenario

Perform these steps:

1. Define a service where the source is *BATCH*.

   Source type and source-related information must be entered either on the service or on the send subscription depending on subscription type and source type.

```
Source Scenario. . . . . BATCH

Source: Batch
```

2. Add the service to the same agreement set as used for the Trading Partner.
3. Make a send subscription for the Trading Partner to the service.
4. Use the fastpath command **WCEDIT** to insert a WC-table entry. The timer function within MailRoom starts the batch scanner at user-defined intervals.
5. Set up the JCL for the batch job (refer to the *Application Programming Guide*).

The working Criteria table entry for the batch scanner

```
KBHWDMIM                Modify Working Criteria Entry                BTB

Press Enter to modify WC table Entry



Country code . . . . . : 000

Key. . . . . . . . . . : STARTTASK007
                         STARTTASKxxx

Value. . . . . . . . . . KBA5 000000 010000_________
                         tttt 000000 hhmmss
Comment. . . . . . . . .
Start KBA5 (batch scanner) every hour_________________
```

DI-EDI sources

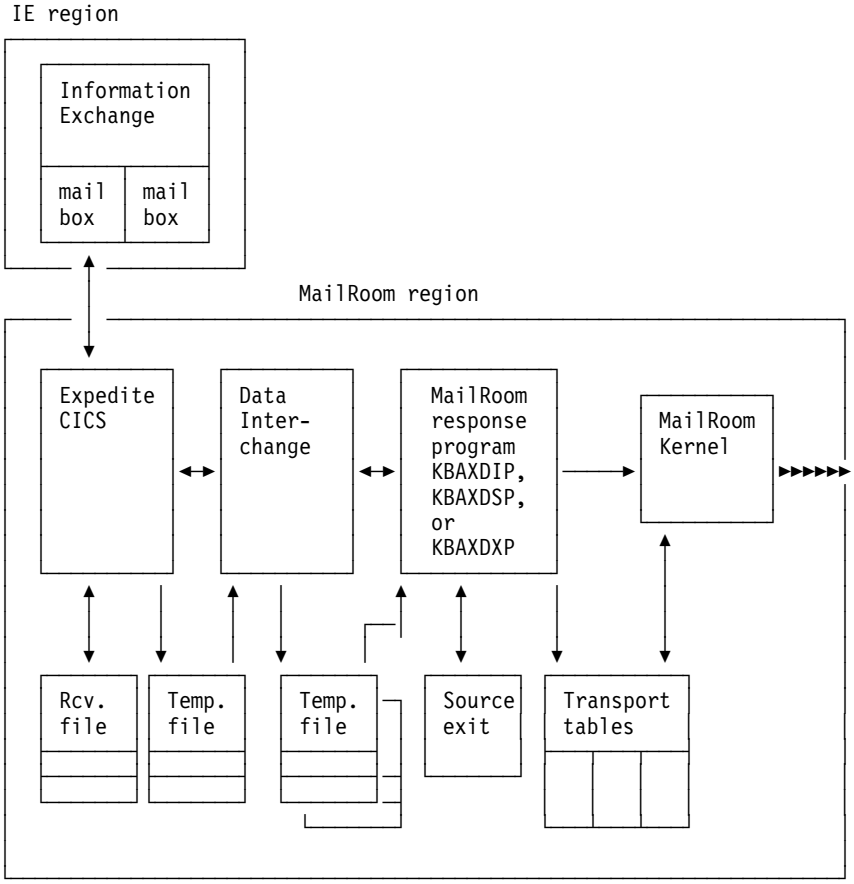

Flow

1. Expedite/CICS receives an interchange from the IE mailbox, and saves it in the Expedite/CICS receive file. The interchange is passed to DataInterchange in a temporary file.
2. DataInterchange de-envelopes the interchange, translates the envelopes to application format and saves the transactions in the Transaction Store. The transactions are passed to the response program in temporary files.
3. The response program:
   a. For each transaction received, a simple or extended M-record is added to it (which one depends on the response program used).
   b. For each transaction, execute optionally Source Exits.
   c. When all transactions are received, a source envelope containing the transactions is inserted into the Transport tables.
   d. Writes audit information to the audit log file for later reconciliation.
   e. These DI files are saved as event texts under the source envelope:
      - Audit file.
      - Exception file if it is not empty.
      - Trace file if it is not empty.
      - The first 10–20 lines of the Envelope file.
   f. Starts the MailRoom kernel.

4. The MailRoom kernel processes the envelope as described in “MailRoom processing” on page 64. In addition to the normal procces, the kernel will also extract the DI handle and keep it with MailRoom status information for online viewing.

The temporary file from DataInterchange

The input file will consist of C-, D- and other optional records added by DataInterchange. The MailRoom adds a simple or extended M-record to the document. The choice between simple or extended M-record depends on which response program is called from DataInterchange.

The maximum length of each data record is 2000 bytes.

Registration dependencies

To allow DataInterchange and the MailRoom interact, there are some MailRoom resources that must be known to DataInterchange and the MailRoom (see Figure 48).

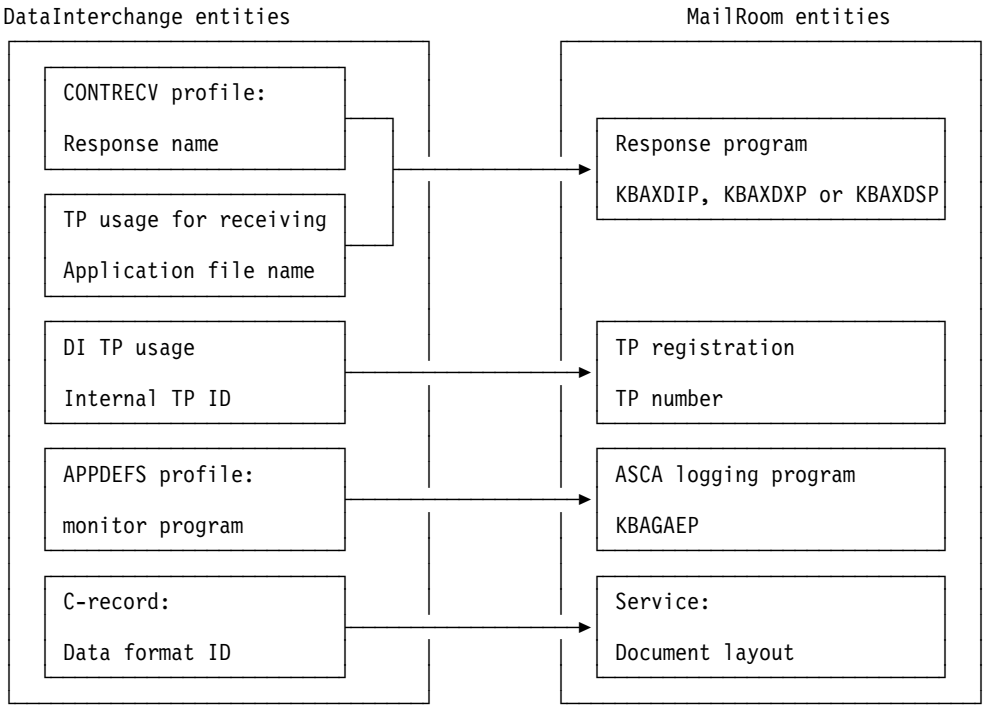

Figure 48. MailRoom and DataInterchange dependencies

CONTRECV Receive Profile

```
PM10                        Update Profile Member              1 to 29 of 19

Profile ID  . . . : CONTRECV

Continuous Recv ID: KBAZPGDI
Active  . . . . . . Y
Requestor ID  . . . KBAZPGDI
TP nickname . . . .
Message user class  INVOICES
Translate . . . . . Y
Raw data  . . . . . N
Print name  . . . . KBAPRNT1
Print type  . . . . TS
Exception name  . . ________
Exception type  . . __
Additional records  IQ___
Deenvelope only . . N
Delay FA's  . . . . Y
FA TS queue . . . . ________
Response name . . . KBAXDIP_
Response type . . . PG
User field  . . . . (requestor ID for sending FAs)
Application ID  . . ________
National Language   ENU___
Allow syncpoints    N
Allow dup envelope  Y
Network acks only   N
Purge interval  . . 99__

Command ===>
Enter  F1=Help  F3=Exit  F12=Cancel
```

Here is a description of the MailRoom fields:

Additional records
MailRoom requires the *I* and *Q* records as a minimum.

Delay FA's (Y/N)
Y causes functional acknowledgments to be created during de-enveloping and queued in the Transaction Store. When a continuous receive process has finished, the MailRoom response program asks DataInterchange to envelope and send the created FA's.

N causes functional acknowledgments to be created during de-enveloping and stored in a TS queue. When a continuous receive process has finished, the TS queue is passed to the MailRoom response program, that asks DataInterchange to envelope and send the FA's in the TS queue.

See “Sending functional acknowledgments” on page 93 for a description of the setup.

FA TS queue
If delay FA's is *Y*, enter &UNIQUE or a TS queue name where the FA's is stored.

See “Sending functional acknowledgments” on page 93 for a description of this setup.

Response name

This is the bridge to MailRoom. The response program on the CONTRECV Profile is invoked when DataInterchange has finished translating all transactions in an Interchange.

Enter *KBAXDIP*, *KBAXDXP* or *KBAXDSP* depending on how you want the MailRoom to interpret the control and information records from DataInterchange, see Table 4.

Response type

Enter **PG**.

User field

If FAs are to be sent by the response program, type the requestor ID that is to be used for sending FAs.

Table 4. M-record field assignments for response programs.

Response program	**KBAXDIP**	**KBAXDXP**	**KBAXDSP**
M-record type	Extended	Extended	Simple
Country code	First three characters from Internal Trading Partner Id (char 1-3 of INTPID from C-record)		
From TP	1. Group Application Sender Id (GSID from I-record) 2. Interchange Sender Id (ISID from I-record)	Remaining characters from Internal Trading Partner Id (char 4-32 of INTPID from C-record)	
To TP	1. EDIFACT Routing Address (UNB-14 from E-record) 2. Group Application Receiver Id (GRID from I-record) 3. Interchange Receiver Id (IRID from I-record)		Not assigned in simple M-record
Document Layout	Data format Id (FORMATID from C-record)		
Application reference	Application Control field (AC from C-record)		

Note: The M-record is assigned with the first non blank value where multiple values are listed (1, 2, 3).

The above M-record assignments are done by the global DI-EDI source exit, see “BTB standard DI-EDI Source Exit KBASXDP” on page 153. It is possible to override all or some of these values by defining a specific source exit, see “Defining Source Exits in MailRoom” on page 34.

Trading Partner Usage for Receiving

```
TP24            Update Trading Partner Usage for Receiving

Transaction ID  . . . . . :  KBAZDIPC
Standard transaction ID . . . . . :  ORDERS

Trading Partner nickname  . . . . . :  123000800000
Application routing (sender)  . . . . :
Application routing (receiver)  . . . :
Responsible agency code . . . . . :
Version . . . . . :
Release . . . . . :
Internal Trading Partner ID . . . . . .  123000800000__________________
Pre-translation exit routine  . . . . .  ________ +
acknowledgment transaction ID . . . . .  CONTRL__
Switch appl routing IDs on FA (Y/N) . .  Y +
Activate usage (Y/N)  . . . . . .  Y +
Test usage (Y/N)  . . . . . .  N +
Log application data (Y/N)  . . . . . .  N +

Command ===>
Enter  Tso  F1=Help  F3=Exit  F4=Prompt  F12=Cancel
F13=Keys help
```

Here is a description of the MailRoom fields:

acknowledgment transaction ID
Enter an ID if you want to send functional acknowledgments.

Switch appl routing IDs on FA (Y/N)
Enter **Y** to indicate that you want the translator to automatically switch the application sender or receiver ID values.

Trading Partner Usage Overrides for Receiving

```
TP27            Trading Partner Usage Overrides for Receiving

Transaction ID . . . . . :  KBAZDIPC
Standard transaction ID  . . . . . :  ORDERS
Trading Partner nickname . . . . . :  123000800000
Application routing (sender) . . . :
Application routing (receiver) . . :

Standard envelope profile member . .  KBAZDIPC
Application password . . . . . .  _____________
Application file name  . . . . . .  KBAXDIP_
Application file type  . . . . . .  PG +
Validation level (0/1/2) . . . . . .  0
Acceptable error level (0/1/2) . . .  0
Data overlay check (Y/N) . . . . . .  N +
Unexpected field check (Y/N) . . . .  N +
Unexpected segment check (Y/N) . . .  N +

Command ===>
Enter  Tso  F1=Help  F3=Exit  F4=Prompt  F12=Cancel
F13=Keys help
```

Here is a description of the MailRoom fields:

Application file name

This is the bridge to MailRoom. The Application file name should be a response program. This program is invoked every time DataInterchange has finished translating a single transaction in the Interchange. MailRoom is dynamically building the M-record for each transaction depending on the used response program name.

Enter **KBAXDIP**, **KBAXDXP** or **KBAXDSP** depending on how you want the MailRoom to interpret the control and information records from DataInterchange, see Table 4 on page 91 for a description of the differences between the response programs.

Application file type

Enter **PG**.

Application definition profile (APPDEFS)

Define a APPDEFS profile member for each activity log profile member defined. It is in this APPDEFS profile that DataInterchange is told to link to the ASCA logging module in MailRoom.

Here is the the APPDEFS profile corresponding to the default activity log profile EDIFFS:

```
PM10                          Update Profile Member

Profile ID  . . . : APPDEFS

Application ID  . : EDIFFS
ACTLOGS member  . . EDIFFS__
Mgt. Rpt. active?   Y
Trx. Store active?  Y
Trx. Image wanted?  Y
Monitor program . . KBAGAEP_

Command ===>
Enter  Tso  F1=Help  F3=Exit  F12=Cancel
F13=Keys help
```

Here is a description of the MailRoom fields:

Mgt. Rpt. active? Enter **Y**. MailRoom uses the report to find the network status of the transactions sent.

Trx. Store active?

Enter **Y**.

Monitor program KBAGAEP. The name of the MailRoom Audit logging module.

Sending functional acknowledgments

There are two ways to handle the sending of functional acknowledgement, but for both types the most is common. The main difference is how the FA's is stored by DI and information is passed to the response program.

You must perform these steps for the MailRoom response program to send functional acknowledgments:

1. On the Continuous Receive profile member enter **Delay FA's = Y** or **Delay FA's = N**. *Y* will cause DataInterchange to store created FA's in the

Transaction Store, while *N* will cause DataInterchange to store created FA's in a TS queue.

If *N* enter a TS queue name in the *FA TS queue* to hold the created FA's. The TS queue name can be specified directly or it can be '&UNIQUE', which will cause DI to create a uniq TS queue name. *We'll recommend that you use the '&UNIQUE'*.

Enter a Requestor ID in the *user field*. This field will be used by the response program.

2. On the Trading Partner Usage for Receiving you must enter the Type of the acknowledgment transaction set which the translator is to return to the sender. The field is *acknowledgment Type*.

   The Types that can be used are *997* for X12, *999* for UCS, and *CONTRL* for UN/EDIFACT message. The Type must be defined in the standard you are using for this Trading Partner transaction.

3. The FA's are sent as follows, if *Delay FA's = Y*:

   a. Upon completion of the Continuous receive process the response program will start transaction *KBAF*.

   b. Transaction *KBAF* asks DataInterchange to envelope and send the FA's using the command:

      ```
      PERFORM ENVELOPE AND SEND WHERE REQID (user field) CLEARFILE (Y)
      ```

   c. DI fetches all FA's in the Transaction Store that are not yet enveloped and sent.

   d. DI envelopes the FA's into the *Trans data queue* specified on the network profile that the requestor ID is pointing at (the requester ID taken from the user field on the continuous receive profile).

   e. DI passes the TS queue to Expedite/CICS.

   f. Expedite/CICS sends the FA's in the TS queue to IE.

4. The FA's are sent as follows, if *Delay FA's = N*:

   a. Upon completion of the Continuous receive process the enveloped FA's is passed to the response program by DataInterchange in a TS queue.

   b. The response program will start transaction *KBAF*.

   c. Transaction *KBAF* ask DataInterchange to pass the TS queue to Expedite/CICS using this command:

      ```
      PERFORM ENVELOPE AND SEND WHERE REQID (user field) FILEID(TS queue)
      ```

   d. Expedite/CICS sends the FA's in the TS queue to IE.

EXP-DOC sources

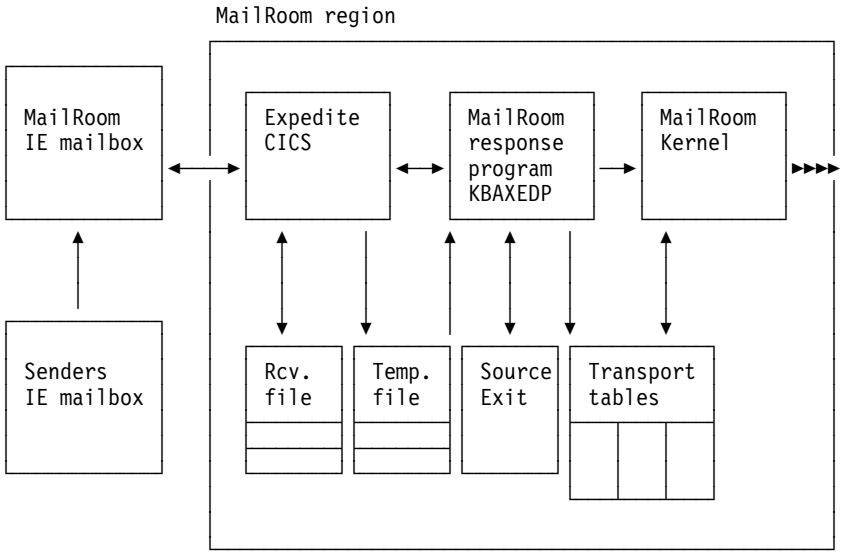

Flow

1. Expedite/CICS receives a file containing M- and D-records, and saves it in the Expedite/CICS receive file. A copy of the file is passed the response program.
2. The response program:
   a. Checks that the first record is an M-record. If not, a dummy M-record is inserted in top of data.
   b. Execute optionally Source Exits.
   c. Inserts the file as a source envelope containing one or multiple documents into the Transport tables.
   d. Inserts the Information Exchange message long header as event text for the source envelope.
   e. Writes audit information to the audit log file.
   f. Starts the MailRoom kernel.
3. The MailRoom kernel processes the envelope as described in “MailRoom processing” on page 64.

The input file

The input file can consist of one or many documents. Each document must start with an M-record.

The maximum length of each data record is 2000 bytes.

Enable the EXP-DOC source scenario

Perform these steps:

1. Define an electronic address for the Trading Partner. The address type should be *IE* for an IE Mailbox. The electronic address identifies the IE account and user ID of the sender.

   The File format is not relevant when receiving.

```
Trading Partner:  123 / 000800000 / Verification TP Inc.

Addressing mode:
Trading Partner. . . . : 123 / 000800000
Address type . . . . . IE +
Scope of address . . . . 1 +

IE Mailbox:
IE System. . . . . sys_____ +
Account. . . . . account_
Userid . . . . . user____
File format. . . . . 2 +
```

2. Define a service where the source is *EXP-DOC*.

   Source type and source-related information must be entered either on the service or on the send subscription depending on subscription type and source type.

   The *Message User Class* field must match the Message User Class you are receiving.

   Prompt for the sender's IE account and user ID. (An inbound service is defined with a subscription type of *Sender*).

```
Source Scenario. . . . : EXP-DOC
Document Layout. . . . . ORDERS

Source: Expedite/CICS Doc
Message User Class . . . IE msg user class
IE userid, account . . . IE: sys  - account  - user
```

3. Add the service to the same agreement set as used for the Trading Partner
4. Let the Trading Partner subscribe to the service.
5. Set up a Continuous receive in Expedite/CICS (see “EXP-FILE sources”). The response program used in the continuous receive is KBAXEDP.

EXP-FILE sources

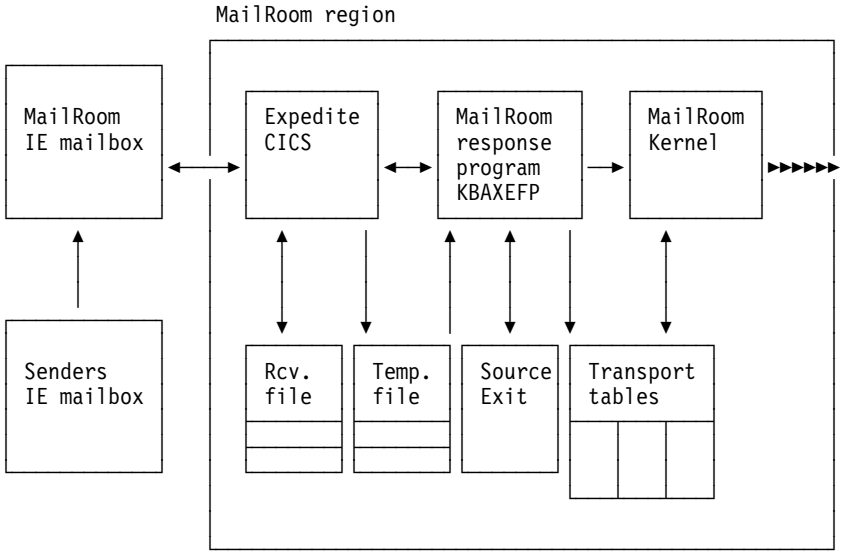

Flow

1. Expedite/CICS receives a flat file from the IE mailbox, and saves it in the Expedite/CICS receive file. A copy of the file is parsed to the response program.
2. The response program performs the following:
   a. Execute optionally Source Exits.
   b. A simple M-record is created with country, Trading Partner number and layout. The information is extracted from a MailRoom subscription with matching IE mailbox and layout.
   c. Inserts the file as a source envelope containing one document to the Transport tables.
   d. Inserts the Information Exchange message long header as event text for the source envelope.
   e. Writes audit information to the audit log file.
   f. Starts the MailRoom kernel.
3. The MailRoom kernel processes the envelope as described in "MailRoom processing" on page 64.

The input file

The MailRoom will consider the file as one document, and it will create and add a simple M-record to it.

A *D* is appended to each data record, so that the MailRoom does not interpret a data record as an M-record.

The maximum length of each data record is 2000 bytes including the appended *D*.

Enable the EXP-FILE source scenario

Perform these steps:

1. Define an electronic address for the Trading Partner. The address type should be *IE* for an IE Mailbox. The electronic address identifies the IE account and user ID of the sender. The Trading Partner number will be used in the M-record that is created by MailRoom.

   The File format is not relevant when receiving.

```
Trading Partner:  123 / 000800000 / Verification TP Inc.

Addressing mode:
Trading Partner. . . . : 123 / 000800000
Address type . . . . . . IE +
Scope of address . . . . 1 +

IE Mailbox:
IE System. . . . . . . . sys_____ +
Account. . . . . . . . . account_
Userid . . . . . . . . . user____
File format. . . . . . . 2 +
```

2. Define a service where the source is *EXP-FILE*.

Source type and source-related information must be entered either on the service or on the send subscription depending on subscription type and source type.

Ensure that the *Document layout* field matches the message user class you are receiving.

Prompt for the sender's IE account and user ID. (The service is defined with a subscription type of *Sender*).

```
Subscription Type. . . : S

Source Scenario. . . . : EXP-FILE
Document Layout. . . . . msg user class__
```

3. Add the service to the same agreement set as used for the Trading Partner.
4. Let the Trading Partner subscribe to the service. When subscribing, prompt for the sender's IE account and user ID.

```
Source: Expedite/CICS File
IE userid, account . . . IE: sys  - account  - user
```

5. Set up a Continuous receive in Expedite/CICS. The response program used in the continuous receive is KBAXEFP.

Services and subscriptions

MailRoom only knows the sender IE Mailbox and the IE message user class when receiving data in the EXP-FILE source scenario, so there are some limitations to the possible MailRoom setup.

The service must be defined with subscription type *S* and the layout must match the IE message user class. It is also necessary to have a sender subscription for the Trading Partner with the IE Mailbox on.

Multiple Trading Partner senders can subscribe to the same service, but as the MailRoom only knows the sending TP number, the receiving TP must be registered as a fixed Trading Partner receiver on the service.

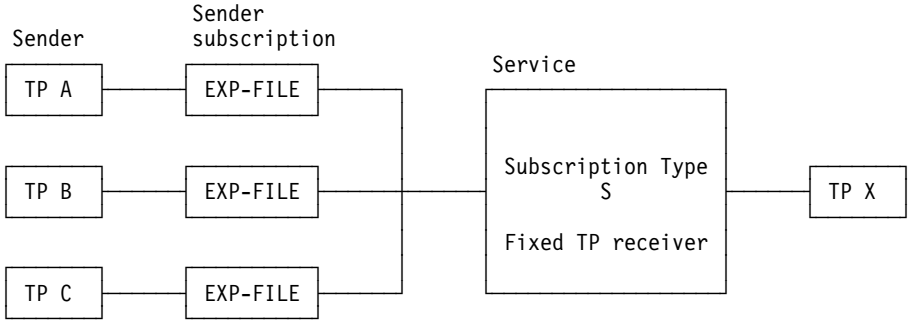

If a TP needs to send documents to multiple Trading Partners, one service for each receiving Trading Partner must be defined. Use different message user classes to distinguish between different receivers.

Setting up Expedite/CICS continuous receive

1. Logon on to Expedite/CICS with the IE account and user ID that the MailRoom region uses for receiving data from IE
2. Select option 1, *Work with receive data*
3. Select option 2, *Start continuous receive*

You get the panel shown in Figure 49.

```
EXPMMO1                Issue Continuous Receive

Account    DKIBM        From:  System ID....... <      >
Userid     DKLINK05            Account/Userid.. < DKIBM    > < DKLINK40
                          -or- List name....... <          >
                          -or- Alias name...... <                      >

                           User class........... < KBAZEFMA >
To:
  File name.............. < KBAXEFP >(File or Receive program name)
  File management....... < PG >     (TS, TD, VS=VSAM, or PG=Program)
  File type.............. < B >      (A=CRLF, B=LL, E=EDI, O=Other)
  File disposition...... < N >      (H=Hold, N=Normal process)
  Retain header data.... < E >      (Y - Keep IE headers / N - Discard)
                                    (E - Use CDH and discard IE headers)
                                    (F - Use CDH and retain IE headers)
  Receive EDI........... < N >      (Y=EDI only, N=NON-EDI, Blank=Both)
  Handle records as..... < W >      (S-Split / W-Wrap / V-Variable data)
  maximum record length..... < 01999 > (00000 - 28000 Characters)

HI308 ENTER FIELD INFORMATION AND PRESS PF5 TO RECEIVE MESSAGE(S).

Command ===>
PF1=Help   PF5=Receive    PF12=Cancel
```

Figure 49. Issue Continuous Receive panel

Press F1 for expEDItes own online help. Here is a short description of the fields:

System ID
: Optional. Specified if sender's mailbox is on a different system.

Account/Userid
: Optional. Sender's account and user ID. This is the mask that to receive with this continuous receive profile. You can receive from more than one sender mailbox with the same profile, if the account or user ID is blank.

List name
: Optional.

Alias name
: Optional.

User class
: Optional. Message User Class of the files you want to receive from IE with this continuous receive definition.

File name
: The receive destination, this is the MailRoom response program. The name is KBAXEFP for EXP-FILE sources and KBAXEDP for EXP-DOC sources.

File management

Type must be PG.

File type

Specify the file format you have agreed with your Trading Partner to receive.

File disposition

N (Normal).

Retain header data

E (Use CDH and discard IE headers). Expedite/CICS will use the Common Data Header if available to determine the file type, and strip off the headers.

Receive EDI

N (Non-EDI data).

Handle records as:

Split—you identify a maximum record length and long records are split into multiple records. New records always start at position 1.

The sample shows how Expedite/CICS splits three received records. A maximum length of 15 is assumed specified on the continuous receive profile.

```
received records:            Same records as passed to the RSP PGM:
xxxxxxxxxxxxxxxxxxxx         xxxxxxxxxxxxxxx
yyyyyyyyyyyyyyyyyyyy         xxxxx
zzzzzzzzzzzzzzzzzzzz         yyyyyyyyyyyyyyy
                             yyyyy
                             zzzzzzzzzzzzzzz
                             zzzzz
```

Wrap—similar to split, except that a new record begins where the previous record ends (not at position1).

A maximum length of 15 is assumed, specified on the continuous receive profile.

```
received records:            Same records as passed to the RSP PGM:
xxxxxxxxxxxxxxxxxxxx         xxxxxxxxxxxxxxx
yyyyyyyyyyyyyyyyyyyy         xxxxxyyyyyyyyyy
zzzzzzzzzzzzzzzzzzzz         yyyyyyyyyyyyyyy
                             yyyyyyyyyyzzzzz
                             zzzzzzzzzzzzzzz
                             zzzzz
```

Variable—each record can have differing lengths.

Max record length

The MailRoom restricts maximum record length to 1999.

Note: You are recommended to:

- Use file types CRLF or LL
- Handle records as WRAP
- Allow 1999 maximum record length

MQ sources

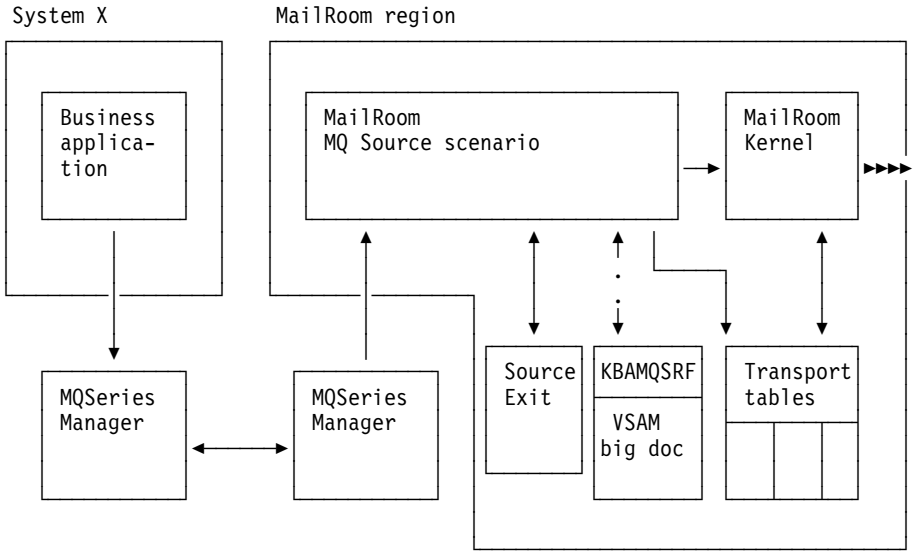

Flow

1. A Business Application writes one or multiple documents to an MQSeries queue controlled by the MQSeries manager. The queue can be defined as local or remote.
2. The MQSeries manager transmits the documents to the MQ manager located on the same system as BTB. The receiving MQ manager then triggers the source scenario.
3. The MQSeries Source scenario:
   a. Reads the trigger data from MQSeries.
   b. Opens and inquires on the MQSeries queue that is parsed in the trigger data.
   c. Reads all data on the MQSeries queue.
   d. Execute optionally Unpacks exit to format the data from MQSeries to the TS Queue.
   e. Execute optionally Source Exits.
   f. Temporary store documents in VSAM file (only documents with more than 1000 records).
   g. Inserts documents in the MailRoom transport tables.
   h. Commit the MQ GET to remove message from queue.
   i. Delete document from VSAM file.
   j. Starts the MailRoom kernel.
4. The MailRoom kernel processes the envelope as described in “MailRoom processing” on page 64.

DBCS characters in data

When receiving DBCS data in a mixed codepage from MQSeries on a ASCII system into MailRoom on a EBCDIC system, the MQSeries codepage translation adds shift-in and shift-out characters in the data stream, corrupting the sent structure that is used by the BTB MQSeries source scenario. The source scenario is able to handle the length fields with the added shift-in and shift-out characters. For information about the MQSeries definitons, refer to the *Application Programming Guide*.

Enable the MQSeries source scenario

Perform these steps:

1. Define a service where the source is *MQ*.

   Source type and source-related information must be entered either on the service or on the send subscription depending on subscription type and source type.

   ```
   Source Scenario. . . . . MQ

   Source: MQSeries
   ```

2. Add the service to the same agreement set as used for the Trading Partner.
3. Make a send subscription for the Trading Partner to the service.
4. Ensure that MQSeries queue IDs and other MQSeries definitions are ready and agreed.

PGM sources

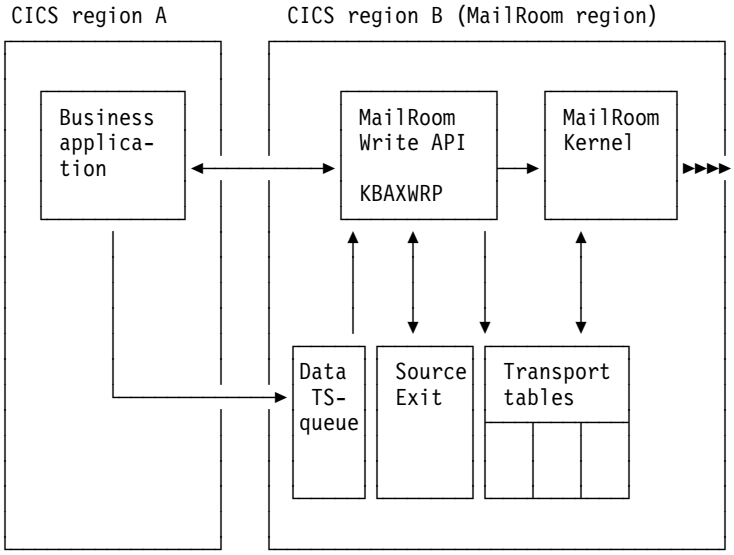

Flow

1. A Business Application writes one or multiple documents into a temporary file. The temporary file is passed to the MailRoom write API. (The Business application resides either in the MailRoom region or in a remote region).
2. The write API:
   a. Reads the Temporary storage queue.
   b. Execute optionally Source Exits.
   c. Splits it into documents using the M-record as separator.
   d. Inserts them as a source envelope into the Transport tables.
   e. Writes audit information to the audit log file.
   f. Starts the MailRoom kernel.
3. The MailRoom kernel processes the envelope as described in “MailRoom processing” on page 64.

The data TS-queue file

The data TS-queue can consist of one or many documents. Each document must start with an M-record. The maximum length of each data record is 2000 bytes.

Enable the PGM source scenario

Perform these steps:

1. Define a service where the source is *PGM*.

   Source type and source-related information must be entered either on the service or on the send subscription depending on subscription type and source type.

   ```
   Source Scenario. . . . . PGM

   Source: Program
   ```

2. Add the service to the same agreement set as used for the Trading Partner.
3. Make a send subscription for the Trading Partner to the service.
4. Code the Business application. For more information about how to code the Business application, refer to the *Application Programming Guide*.
5. Install your Business application in either the same CICS region or in a remote CICS region.

SAP sources

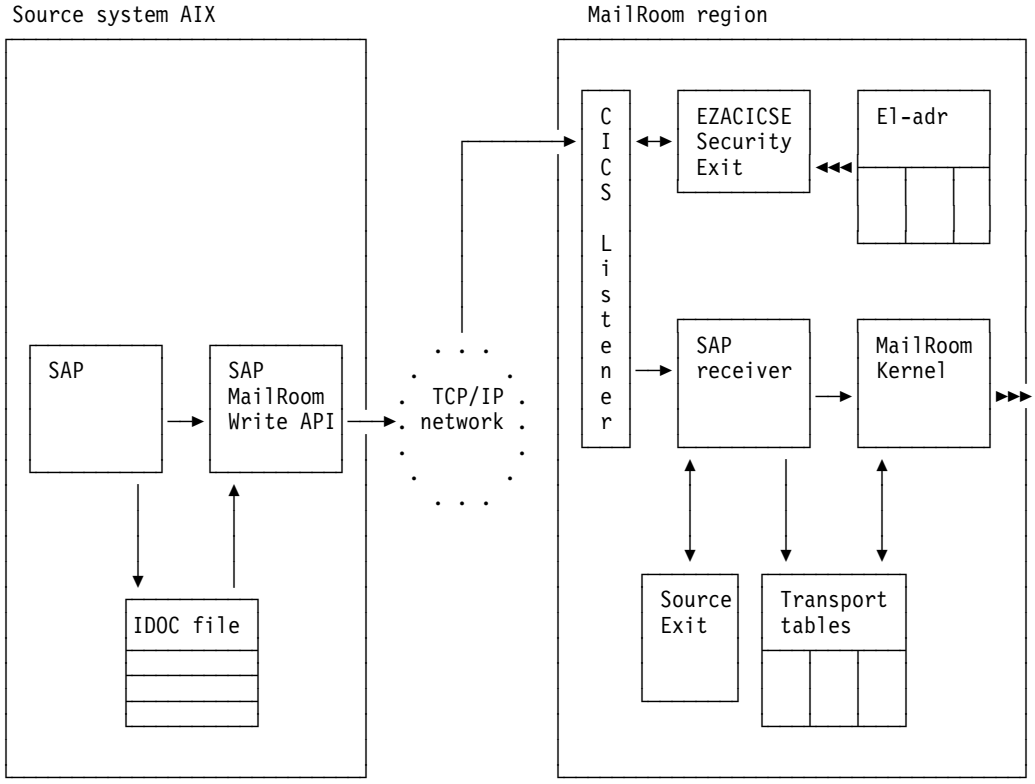

Flow

1. SAP writes an IDOC into SAP-s internal files. The SAP MailRoom write API is triggered.
2. The SAP MailRoom write API reads the document from the file and initiates communication with the CICS Listener.
3. The CICS listener calls a security exit where the passed transaction code is checked. The IP address or host name is also checked against the MailRoom tables. The IP address or host name must be defined in the BTB for the Trading Partner. After successful checking, the MailRoom SAP receiver is called.
4. Execute the optionally source exit
5. The MailRoom SAP receiver:
   a. Receives the data from the TCP/IP network.
   b. Splits the data into one or multiple documents. An M-record is appended to every IDOC.
   c. Saves the documents in the MailRoom tables as a source envelope.
   d. Logs audit information in a Audit file.
   e. Starts the MailRoom kernel.
   f. Passes the created source envelope key back to the SAP MailRoom write API. A SAP status record is produced.
6. The MailRoom kernel first examines the sender IP address and looks up the host name, then processes the envelope as described in “MailRoom processing” on page 64.

The input file

The input file is created by SAP with a physical file name according to the SAP EDI port definition. You are recommended to allow SAP to use the client number and IDOC number as the file name. While SAP can batch IDOCs together, it is not recommended to use that approach with BTB MailRoom SAP bridge, as the status back to SAP is only sent once per invocation per file.

AIX considerations

While configuring MailRoom it is assumed that the AIX and SAP installation are already performed as described in the *readme* file delivered with the executable code.

Enable the SAP source scenario

Perform these steps:

1. Define an electronic address for the Trading Partner. The address type should be *TC* for a TCP/IP Server. Use either the full host name or the dotted IP address.

```
Trading Partner:  123 / 000800000 / Verification TP Inc.

Addressing mode:
Trading Partner. . . . : 123 / 000800000
Address type . . . . . : TC
Scope of address . . . . 1

TCP/IP server hostname:
Hostname/IP address. . . sapserver.somewhere.xxx.com
```

2. Define a service where the source is *SAP*.

   Source type and source-related information must be entered either on the service or on the send subscription depending on subscription type and source type.

   Press F4 prompt in the *TCP/IP address field* and choose the electronic address you just defined.

```
Source Scenario. . . . . SAP

Source: SAP/R3
TCP/IP address . . . . . TC: sapserver.somewhere.xxx.com_________ +

Status info back to SAP
Codepage conversion. . . CP500819 +
TCP/IP Port number . . . 1812

Define System Ack.
System Ack type. . . . . PGM-CICS +
CICS TD Queue. . . . . KBAO
```

3. *Status info back to SAP* is used when sending System Acknowledgment back to SAP. When defining a SAP source scenario the System Ack. type must be set to *PGM-CICS* and the CICS TD Queue must be set to *KBAO* to get the acknowledgment passed back to SAP.

   TCP/IP port number must match the one monitored by the TCP/IP listener on the AIX system.

4. Add the service to the same agreement set as used for the Trading Partner.
5. Make a send subscription for the Trading Partner to the service.
6. Ensure that the CICS TCP/IP listener is started and listening on a port. Transaction CSKE can do this. (Port 1812 is the default, but this can be different if more than one CICS is using the same TCP/IP address space).

   The SAP MailRoom write API running on AIX must use the same port number.

SAP-MQ sources

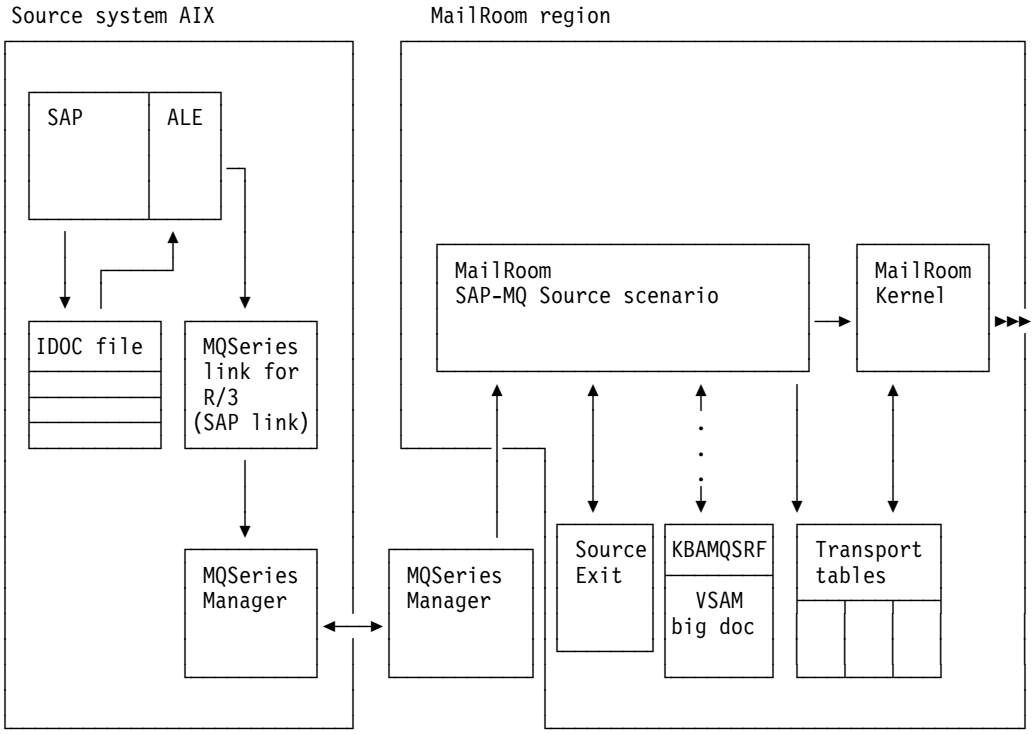

Flow

1. SAP writes an IDOC into the SAP internal files. SAP then triggers the Application Link Enabling (ALE), which passes the IDOC to MQSeries link for R/3 (SAP link).
2. SAP link then writes the IDOC to the MQSeries queue controlled by the MQ manager.
3. MQ manager handles the transmission of the documents to the MQ manager located on the same system as BTB. The receiving MQ manager then triggers the source scenario.
4. The MQSeries Source scenario:
   a. Reads the trigger data from MQSeries.
   b. Opens and inquires on the MQSeries queue that is parsed in the trigger data.
   c. Reads all data on the MQSeries queue.
   d. Execute optionally unpack exit to format the data from MQSeries onto TS Queue.
   e. Execute optionally Source Exits.
   f. Inserts documents in the MailRoom transport tables.
   g. Starts the MailRoom kernel.
5. The MailRoom kernel processes the envelope as described in “MailRoom processing” on page 64.

DBCS characters in SAP IDOC segments

When receiving DBCS data in a mixed codepage from MQSeries on a SAP system into MailRoom on a EBCDIC system, the MQSeries codepage translation will add shift-in or shift-out characters in the datastream, which will cause the length of the SAP IDOC segment to be greater than 1055 bytes. The SAP-MQ source scenario is able to handle this in respect to the added shift-in or shift-out characters. For information about the MQSeries definitions, refer to the *Application Programming Guide*.

Enable the SAP-MQ source scenario

Perform these steps:

1. Define a service where the source is *SAP-MQ*. Source type and source-related information must be entered either on the service or on the send subscription depending on subscription type and source type. When receiving IDOCs Version 4 from SAP the *SAP IDoc type field* must be specified on the send subscription. This field is used to link the received IDOC type from the SAP EDI_DC40 structure to the MailRoom Layout field when building the M-record. The field is only used when receiving SAP Version 4 IDOCs.

   ```
   Source Scenario. . . . . SAP-MQ

   Source: SAP/R3 (MQSeries
   SAP IDoc type. . . . . _____________________________
   ```

2. Add the service to the same agreement set as used for the Trading Partner.
3. Make a send subscription for the Trading Partner to the service (see the *Application Programming Guide*).
4. Ensure that MQSeries queue IDs and other MQSeries definitions are ready and agreed.

TCPIP sources

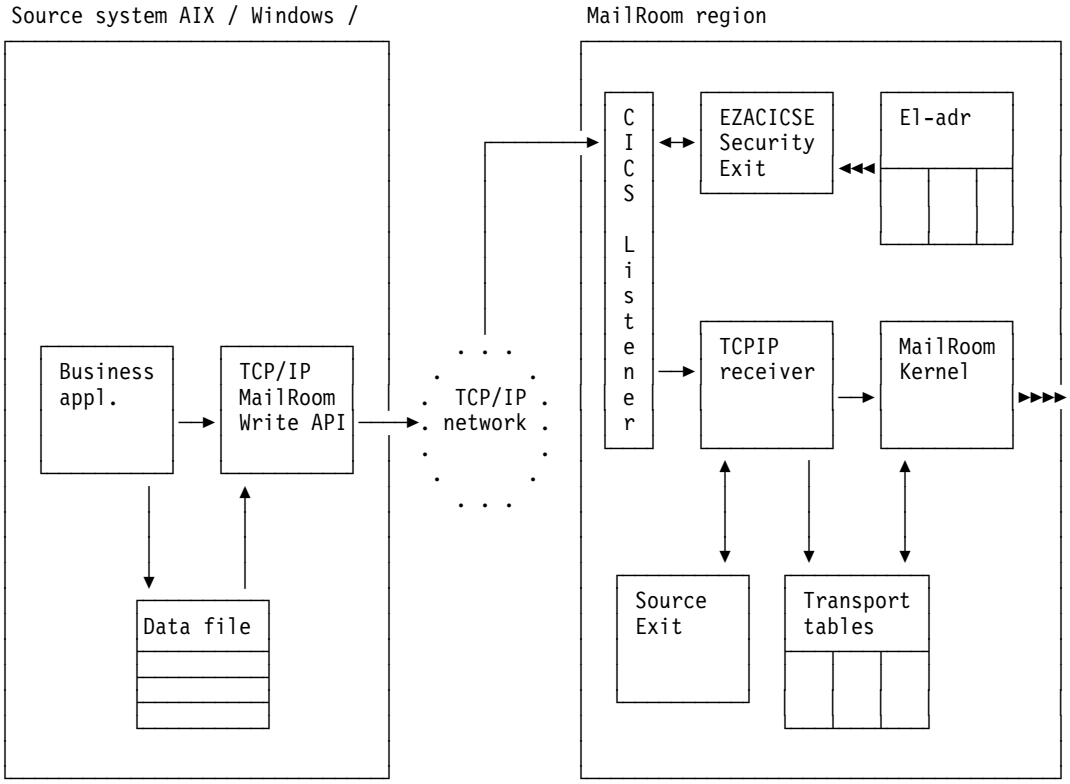

Flow

1. A Business application calls the TCP/IP MailRoom write API with a document in a file.
2. The MailRoom write API reads the document from the file and initiates communication with the CICS Listener.
3. The CICS listener calls a security exit where the passed transaction code is checked, and also the IP address or host name is checked against the MailRoom tables. The IP address or host name must be defined in the BTB for the Trading Partner. After successful checking, the TCPIP receiver is called.
4. The TCP/IP receiver:
   a. Receives the data from TCP/IP network.
   b. Execute optionally Source Exits.
   c. Splits the data into one or multiple documents using the M-record as separator.
   d. Saves the documents in the MailRoom tables as a source envelope.
   e. Logs audit information in a Audit file.
   f. Starts the MailRoom kernel.
   g. Passes the created source envelope key back to the Business application.
5. The MailRoom kernel first examines the sender IP address and looks up the host name, then processes the envelope as described in “MailRoom processing” on page 64.

The input file

The input file can consist of one or many documents. Each document must start with an M-record.

The maximum length of each data record is 2000 bytes.

Enable the TCP/IP source scenario

Perform these steps:

1. Define an electronic address for the Trading Partner. The address type should be *TC* for a TCP/IP Server. Use either the full host name or the dotted IP address.

```
Trading Partner:  123 / 000800000 / Verification TP Inc.

Addressing mode:
Trading Partner. . . . : 123 / 000800000
Address type . . . . . : TC
Scope of address . . . . 1

TCP/IP server hostname:
Hostname/IP address. . . myserver.somewhere.xxx.com
```

2. Define a service where the source is *TCPIP*.

   Source type and source-related information must be entered either on the service or on the send subscription depending on subscription type and source type.

   For all subscription types the *TCP/IP address field* must be specified on the send subscription.

   Make a prompt in the *TCP/IP address field* and choose the electronic address you just defined.

```
Source Scenario. . . . . TCPIP

Source: TCP/IP
TCP/IP address . . . . . TC: myserver.somewhere.xxx.com_________ +
```

3. Add the service to the same agreement set as used for the Trading Partner.
4. Make a send subscription for the Trading Partner to the service.
5. Ensure that the CICS TCP/IP listener is started and listening on a port. Transaction CSKE can do this. (Port 1812 is the default, but this can be different if more than one CICS is using the same TCP/IP address space).

   The TCP/IP MailRoom write API running on OS/2 or AIX must use the same port number.

TIE-IMS sources

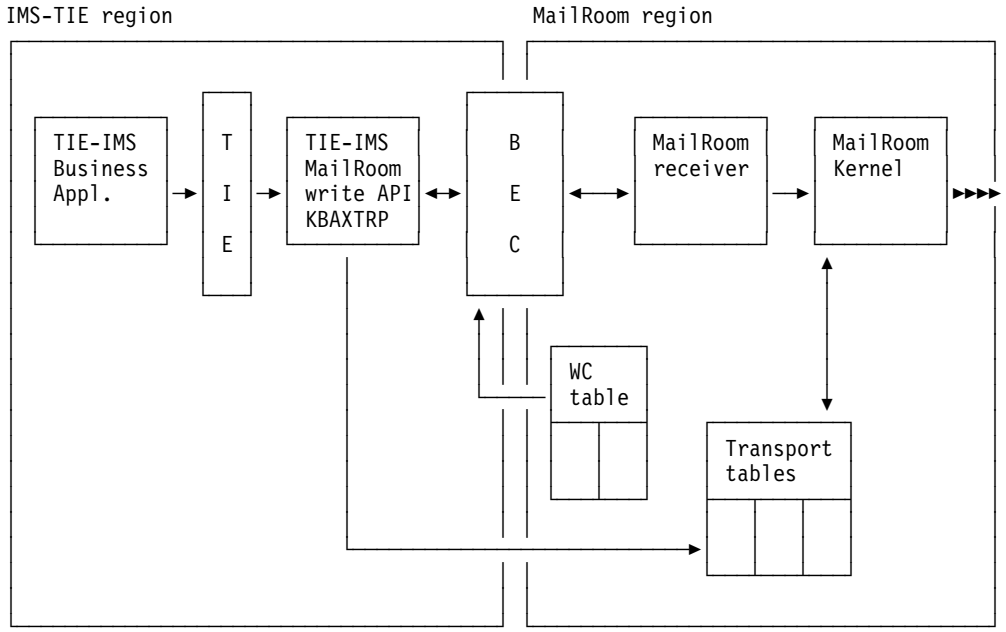

Flow

1. A Business application writes a document to TIE.
2. The MailRoom TIE source module:
   a. Reads the document from TIE.
   b. Inserts a source envelope containing the document into the Transport tables.
   c. Passes the source envelope key to BEC.
3. BEC:
   a. Reads the Working Criteria table to find out where the MailRoom region resides.
   b. Passes the source envelope key to a MailRoom receiver module.
4. The MailRoom receiver module logs audit information of the source envelope, and starts the MailRoom kernel.
5. The MailRoom kernel processes the envelope as described in “MailRoom processing” on page 64.

Note, Source Exits is not available for source scenario TIE-IMS, instead use the TIE-MQ.

The document inserted to TIE by the Business application

The first record in the document must be an M-record. If it is not, then the TIE mapping must provide one, as the MailRoom TIE-IMS source API will require the M-record.

The maximum length of each data record is 2000 bytes.

Enable the TIE-IMS source scenario

Perform these steps:

1. Define a service where the source is *TIE-IMS*.

   Source type and source-related information must be entered either on the service or on the send subscription depending on subscription type and source type.

   ```
   Source Scenario. . . . . TIE-IMS

   Source: ECMVS TIE/IMS
   ```

   Add the service to the same agreement set as used for the Trading Partner.

   Make a send subscription for the Trading Partner to the service.

   Use the fastpath command **WCEDIT** to insert a *KBBEDAM* WC-table entry.

The Working Criteria table entry for the MailRoom TIE-IMS receiver

```
KBHWDMIM                Modify Working Criteria Entry

Country code . . . . . : 123

Key. . . . . . . . . . : KBBEDAM KBASIRP
                         KBBEDAM xxxxxxxx

Value. . . . . . . . . . FKEIM04_____________________
                         11111111

Comment. . . . . . . . .
LTERM of ISC-Link (IMS-CICS)_____________________________________________
```

Here is a description of the fields:

Country code
: Trading Partner country

Key
: The key the BEC module will use. KBBEDAM is the name of the BEC module reading this entry. KBASIRP is the name of the MailRoom receiver module that BEC will invoke.

Value
: Enter the LTERM name for the ISClink port between IMS and MailRoom region.

TIE Setup

On the system where TIE is installed, set up the necessary TIE elements according to the TIE documentation. Define in the Recipient Operational Control that transaction KBAXTRx (where x is your local suffix, for example P) will be triggered.

TIE-MQ sources

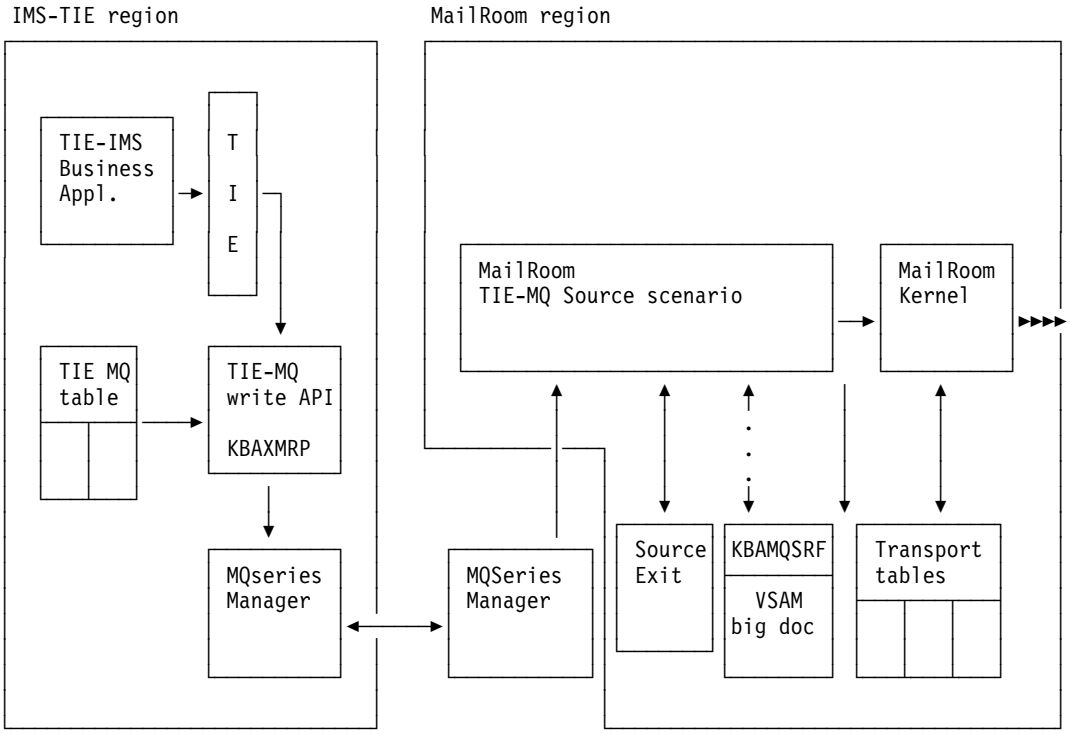

Flow

1. A Business application writes a document to TIE.
2. The MailRoom TIE-MQ source module:
   a. Reads the document from TIE.
   b. Reads the KBDTMT DB2 table to find an entry for the TIE Application, country and Recipient, or a default entry valid for all combinations of TIE parameters.
   c. Writes the document to a buffer in MailRoom MQSeries format.
   d. Performs MQSeries PUT of the buffer to the MQSeries queue specified on the KBDTMT DB2 table.
3. The MQSeries manager handles transmitting the documents to the MQSeries MQSeries manager located on the same system as BTB. The receiving MQSeries manager then triggers the source scenario.
4. The TIE-MQ Source scenario:
   a. Reads the trigger data from MQSeries.
   b. Opens and inquires on the MQSeries queue that is parsed in the trigger data.
   c. Reads all data on the MQSeries queue.
   d. Execute the optionally unpack exit to format the data from MQSeries to the TS Queue.
   e. Execute the optionally source exit.
   f. Inserts documents in the MailRoom transport tables.
   g. Starts the MailRoom kernel.

5. The MailRoom kernel processes the envelope as described in “MailRoom processing” on page 64.

The document inserted to TIE by the Business application

The first record in the document must be an M-record. If it is not, then the TIE mapping must provide one, as the MailRoom TIE-MQ source API will require the M-record.

The maximum length of each data record is 2000 bytes.

Enable the TIE-MQ source scenario

Perform these steps:

1. Define a service where the source is *TIE-MQ*.

   Source type and source-related information must be entered either on the service or on the send subscription depending on subscription type and source type.

   ```
   Source Scenario. . . . . TIE-MQ

   Source: ECMVS TIE/MQ
   ```

2. Add the service to the same agreement set as used for the Trading Partner.
3. Make a send subscription for the Trading Partner to the service.
4. Ensure that the MQSeries queueid(s) and other MQSeries definitions are ready and agreed. Sample input for MQSeries definitions is included in the BTB package and documented in the Installation Guide.

On the system where TIE is installed:

1. Insert entries in the KBDTMT DB2 table for each combination of TIE details that will send data to BTB.

   The format of the table is as follows:

   IOPUCTY
   TIE country

   ISYSIDY
   TIE application

   ITRNRCP
   TIE recipient

   SKBA_MQQNAME
   MQSeries queuename for data

   SKBA_MQQERR
   MQSeries queuename for errors

   SKBA_MQMNAME
   MQSeries manager name (blank for default)

   SKBA_RES1
   Reserved

   You can create generic entries using asterisks if several combinations will send to the same MQSeries queue. Ensure that a default entry with country,

application and recipient set to asterisks, has been inserted. This will allow transmissions and errors to be handled even if an exact match cannot be found. It is recommended that the error queue is different from the data queue.

The TIE-MQ IMS response program will attempt to retrieve the best match from the table in the following way:

a. Exact match on country, application and recipient.
b. Exact match on application and recipient, any country.
c. Exact match on application and country, any recipient.
d. Exact match on application. Any country any recipient.
e. No exact match, default entry.

```
Cty Appl Recipient  Queue Manager Queue
123 ABCD ORDERS     MQMZ          QL.KBH.MYQUEUE1
*** ABCD ORDERS     MQMZ          QL.KBH.MYQUEUE2
123 ABCD ********** MQMZ          QL.KBH.MYQUEUE3
*** **** ********** MQMZ          QL.KBH.MYQUEUE4
```

In the above example, data will be written to queues as follows:

```
Cty Appl Recipient  Queue
123 ABCD ORDERS     QL.KBH.MYQUEUE1
678 ABCD ORDERS     QL.KBH.MYQUEUE2
123 BBBB ORDERS     QL.KBH.MYQUEUE4
678 BBBB ORDERS     QL.KBH.MYQUEUE4
123 ABCD INVOICE    QL.KBH.MYQUEUE3
678 ABCD INVOICE    QL.KBH.MYQUEUE4
123 BBBB INVOICE    QL.KBH.MYQUEUE4
678 BBBB INVOICE    QL.KBH.MYQUEUE4
```

These different queues can then trigger the TIE-MQ process in different CICS regions.

If your TIE installation will only be sending to one BTB installation, it is possible to run with only a default entry in the DB2 table.

2. Set up TIE according to the TIE documentation. Define in the Recipient Operational Control that transaction KBAXMR0 will be triggered.

Chapter 8. Setting up destination scenarios

This section helps you to set up your destination scenarios.

APPC destinations

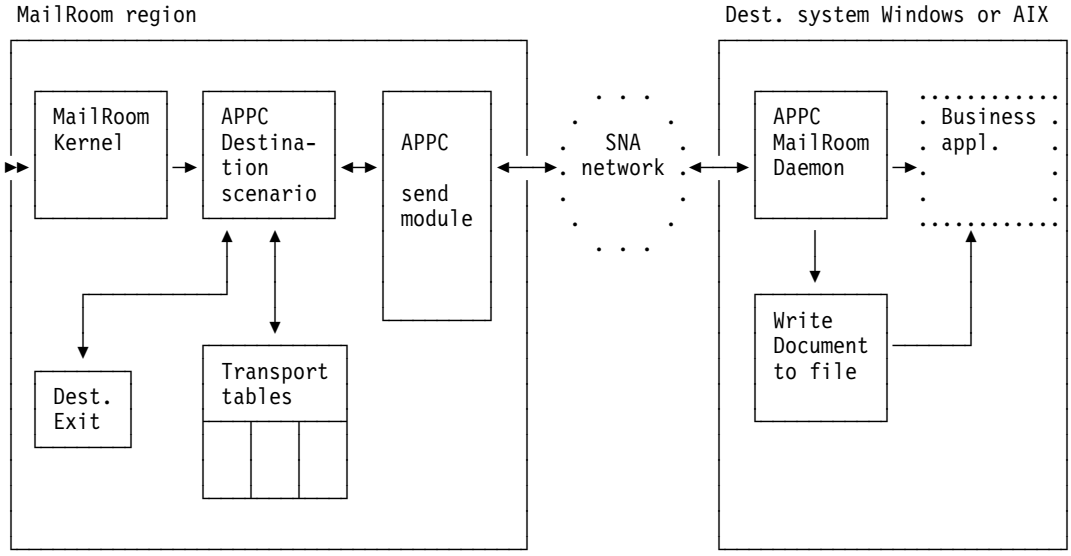

Flow

1. The MailRoom kernel starts the APPC destination scenario.
2. The APPC destination scenario will process all documents in the destination envelope.
3. Calls a destination exit if one has been specified on the service or subscription.
4. Passes the documents to a APPC send program one by one.
5. The APPC send program sends the document to the APPC MailRoom daemon.
6. The APPC MailRoom daemon writes the document to a file.
7. The APPC MailRoom daemon optionally starts a business application to process the received document.
8. When the acknowledgment level has been reached the related requests are set in status *FINISH*.

Enable the APPC destination scenario

Perform these steps:

1. Define a service where the destination is *APPC*.

   Enter Destination type and destination-related information either on the service or on the receive subscription (depending on subscription type and destination type).

   a. Prompt for type of records to send and format of M-record.
   b. Enter the CICS connection or SYSID.
   c. Prompt for the code page to be used.
   d. Enter the remote transaction program to be started.

© Copyright IBM Corp. 1992, 2002

e. Prompt for type of destination exit.

```
Destination Scenario . . APPC

Dest: APPC
Send which records . . . RAW_____ +
Format of M-Record . . . EXTREC00 +
CICS Connection/Sysid. . NN4A
Codepage conversion. . . CP500819 +
Remote Trans. Pgm. . . . IMBAPPC_
Destination Exit . . . . ________ +
Exit parameters. . . . . _________________
```

2. Add the service to the same agreement set as used for the Trading Partner.
3. Make a receive subscription for the Trading Partner to the service.

Choosing the acknowledgment level

Level	Description.
X	N/A (If specified, it will be interpreted as level 0)
0	The document has been written to a file on the receivers machine
1	N/A (If specified, it will be interpreted as level 0)
2	Business application has processed the document and sent a final ACK to MailRoom

BATCH destinations

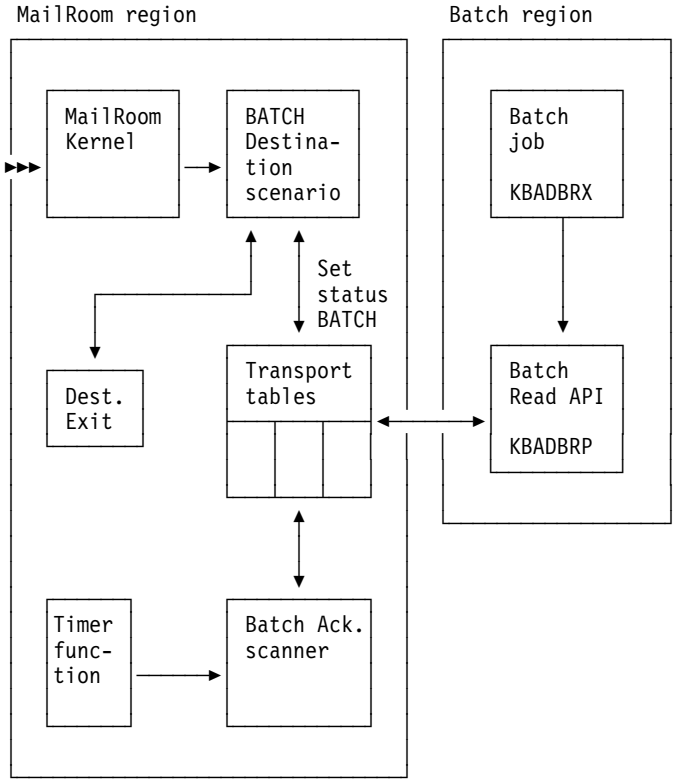

Flow

1. The MailRoom kernel starts the BATCH destination scenario.
2. The BATCH destination scenario will process all documents in the destination envelope.
3. Calls a destination exit if one has been specified on the service or subscription.
4. Updates the status of each document to *BATCH*, which marks the document ready to be processed by the Batch Read API.
5. A batch job executes the Batch Read API.
6. The Read API reads all documents matching the criteria specified in the input parameters for the job. When the documents are written to the output file, the status of the documents in the transport tables are changed to *READ*.
7. On the basis of an entry in the Working Criteria table, the timer function in MailRoom triggers the batch acknowledgment scanner. The scanner searches for all documents in status *READ*, and changes the status to *FINISH*.

Enable the Batch destination scenario

Perform these steps:

1. Define a service where the destination is *BATCH*.

   Destination type and destination related information must be entered either on the service or on the receive subscription depending on subscription type and destination type.

   ```
   Destination Scenario . . BATCH

   Dest: Batch
   ```

2. Add the service to the same agreement set as used for the Trading Partner.
3. Make a receive subscription for the Trading Partner to the service.
4. Use the fastpath command **WCEDIT** to insert a WC-table entry for the timer function. The timer function will then start the Batch acknowledgment scanner at user-defined intervals.
5. Set up the JCL for the BATCH Read utility (refer to the *Application Programming Guide*).

The Working Criteria table entry for the BATCH acknowledgment scanner

```
KBHWDMIM                Modify Working Criteria Entry

Press Enter to modify WC table Entry


Country code . . . . . : 000

Key. . . . . . . . . . : STARTTASK006
                         STARTTASKxxx

Value. . . . . . . . . . KBA4 000000 003000_______________
                         tttt 000000 hhmmss

Comment. . . . . . . . .
Start KBA4 (Batch Ack Scanner) every 30 min_________________
```

Choosing the acknowledgment level

Note that there is no difference between using acknowledgment level 1 and 2.

Level	Description
X	N/A (If specified, it will be interpreted as level 0)
0	The document is ready to be read by the batch utility
1	The document has been read by the batch utility
2	N/A (If specified, it will be interpreted as level 1)

DI-EDI destinations

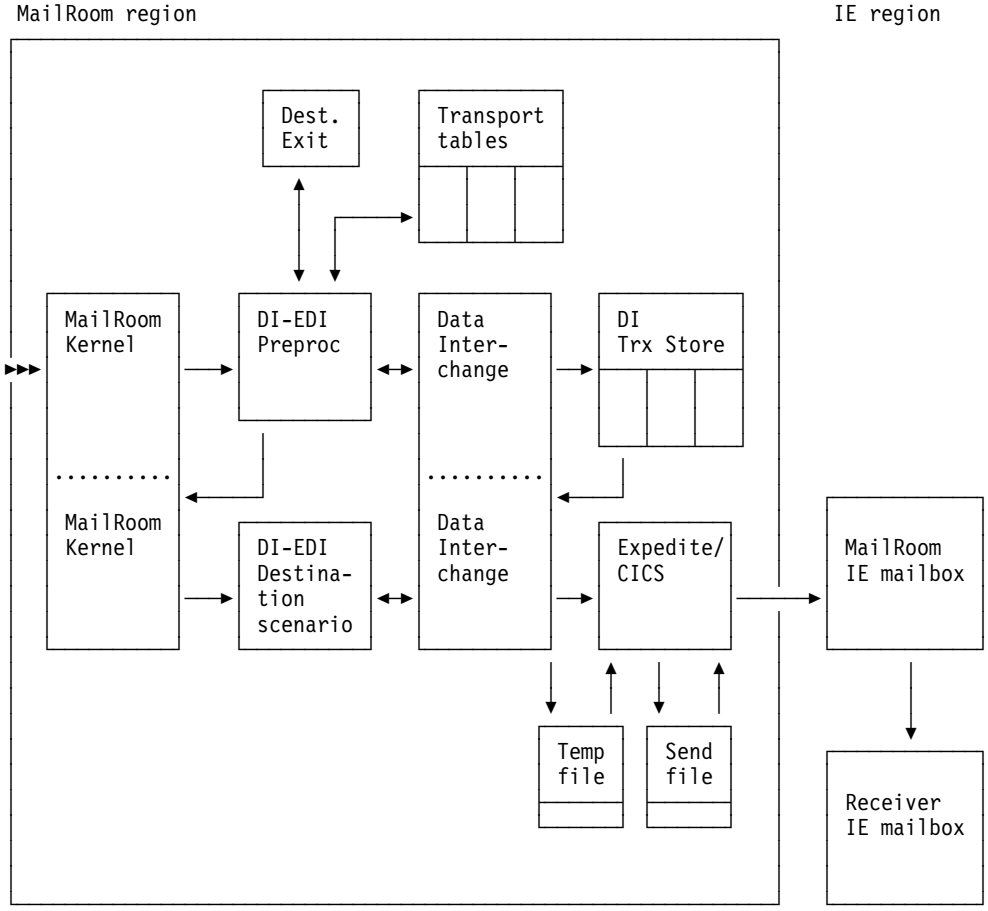

Flow

1. The MailRoom kernel triggers the DI-EDI preprocessing module whenever it has created a derived envelope destined for DI.
2. DI-EDI preprocessing module calls a destination exit if one has been specified on the service/subscription.
3. DI-EDI preprocessing module reads the documents in the derived envelope from the transport tables. The documents are translated to standard one by one. The documents are passed to DI in temporary files.
4. DataInterchange translates each document and saves the standard data in the Transaction Store.

   If only one document fails to be translated, then all the documents are set in status *FAIL*. It will then be necessary to examine the Audit file for the document that failed. If the error can be corrected, it is possible to restart the translation from the *MailRoom Expanded Source Envelope* panel.
5. When the schedule expires, the MailRoom kernel will pass the batch ID to DataInterchange.
6. DI envelopes all the related transactions into an interchange. The interchange is passed to Expedite/CICS in a temporary file.
7. Expedite/CICS saves the Interchange in the Expedite/CICS send file and starts a new task to send the Interchange to IE.

8. DataInterchange updates the transaction status to *SEND REQUESTED*.
9. The MailRoom updates the status of the requests to *PENDING*, and updates the request *Sent status* field to *1*. The request status will remain *PENDING* at least until the data has reached the IE mailbox.

Application data format

The application data format to be translated must be in C and D record format. Application data in raw data format is not supported. Before the preprocessing module asks DI to translate to standard, the M-record is stripped off, and if no C-record is found in the application data, then one is created based on the information in the M-record.

Dependencies between MailRoom services and DI entities

To ensure cooperation between DI and the MailRoom, there are certain MailRoom resources that must be known to DI. So, when setting up this scenario, ensure that these resources are defined accordingly.

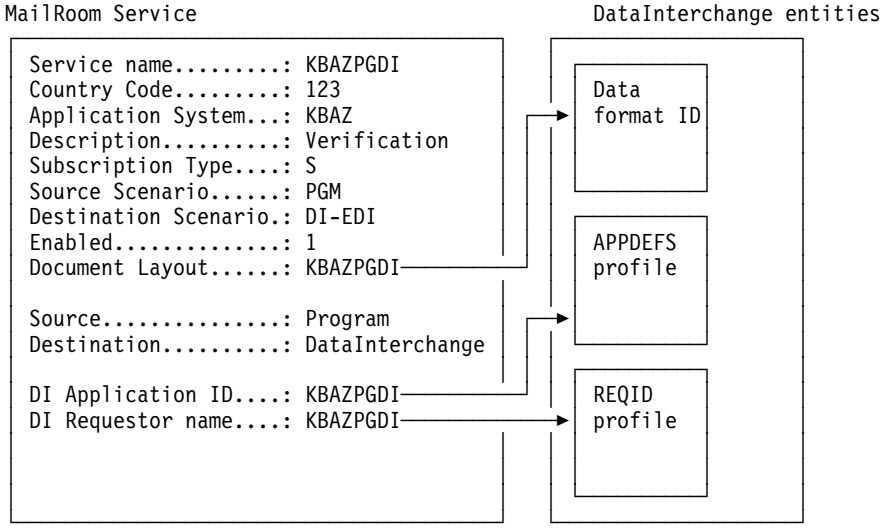

Enable the DI-EDI destination scenario

Perform these steps:

1. Define the DI entities as described above.

   In addition to the Format ID and the APPDEFS and REQID profiles that have to be completed with other relevant data, the Trading Partner profile must be defined.

   In the TPPROF profile member or the REQID profile you must specify **Net acknowledgment: F**. This tells DI that you want to receive all types of network acknowledgments when sending to this partner.

   The MailRoom will refuse to set the status of the transaction to Finished, until it has received information back from IE/DI, that IE has accepted responsibility.

   This means that, when defining the first outbound service in DI, you also must set up a continuous receive that only receives network acknowledgments. This will cause DI to receive the requested network acknowledgments from IE and pair them with sent transactions and update its Transaction Store accordingly.

   Note that when the Trading Partner is using another VAN than IBM Global Network (IGN), i.e DanNet, the acknowledgment process does not work

properly. The acknowledgment level must in such cases be set to *X* on the MailRoom Service for the request to reach status *FINISH*.

2. Define a service where the destination is *DI-EDI*.

   Destination type and destination related information must be entered either on the service or on the receive subscription depending on subscription type and destination type.

   Destination specific fields:

   DI Application Id
   Used by DataInterchange to select which Log file to use.

   DI Requestor name
   Used by DataInterchange to select which mailbox is used to send from.

   DI TRANSLATE parms.
   Appended to the *PERFORM TRANSLATE* command issued by the MailRoom when documents are translated to standard format by DataInterchange.

   The TRANSLATE command used:

```
PERFORM TRANSLATE TO STANDARD WHERE APPFILE (set by MailRoom)
                                    APPTYPE (TS)
                                    OPTRECS (I)
<DI TRANSLATE parms>
```

   Note that an override cannot be done, and that the MailRoom will not validate the additional parameters.

   DI SEND/ENVELOPE parms
   If completed, this field will be appended to the *PERFORM ENVELOPE AND SEND* command issued by the MailRoom when documents are enveloped and sent to the network by DataInterchange.

   The ENVELOPE AND SEND command used:

```
PERFORM ENVELOPE AND SEND WHERE REQID  (DI Requestor name)
                                HANDLE (set by MailRoom)
                                FILEID (set by MailRoom)
                                APPLID (DI Application Id)
<DI SEND/ENVELOPE parms>
```

   Note: An override cannot be done, and that the MailRoom will not validate the additional parameters.

   DI Test Indicator
   Used to specify that a document must be sent with the test indicator set.

   Also supply the name of a destination exit if one is to be used for the scenario.

```
Destination Scenario . . DI-EDI

Dest: DataInterchange
DI Application Id. . . . KBAZPGDI
DI Requestor name. . . . KBAZPGDI
DI TRANSLATE parms . . . _____________________________________
DI SEND/ENVELOPE parms . _____________________________________
DI Test Indicator. . . . _ +
Destination Exit . . . . ________ +
```

3. Add the service to the same agreement set as used for the Trading Partner.
4. Make a receive subscription for the Trading Partner to the service.

Choosing the acknowledgment level in MailRoom

The acknowledgment level is defined at the service registration panel. Once the envelope has been sent, the MailRoom acknowledgment program will monitor how the sending is progressing. It does this by asking DataInterchange which transaction network status has been reached for this request.

MailRoom acknowledgment level reflected in the EDI processing:

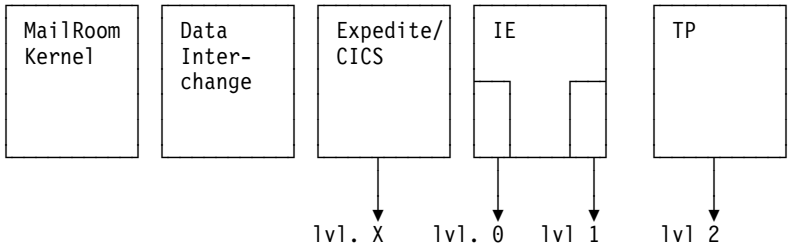

Here are the acknowledgment level choices:

Level	Description
X	Status *Send Requested* reached in DataInterchange, for example Expedite/CICS has received the data.
0	The document is in the sender's IE mailbox
1	The document is in the receiver's IE mailbox
2	A functional acknowledgment has been received for this document

EXP-DOC destinations

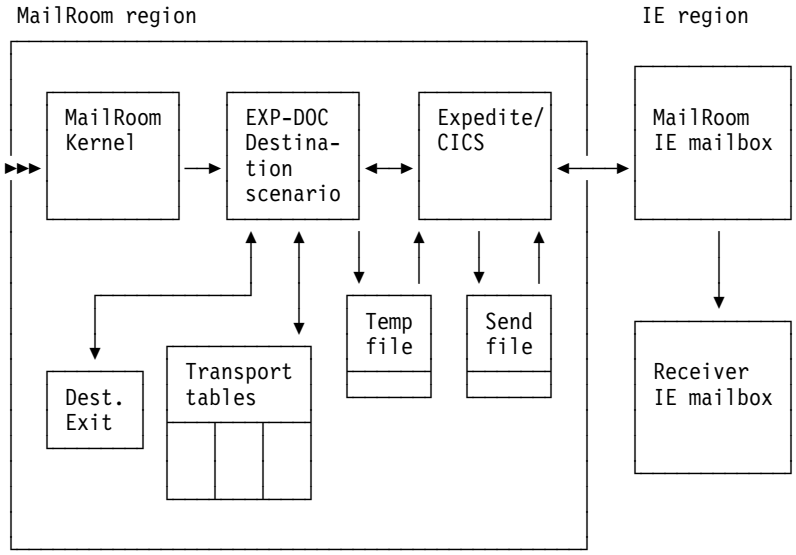

Flow

1. The MailRoom kernel starts the EXP-DOC destination scenario.
2. The EXP-DOC destination scenario will process all documents in the destination envelope.
3. Calls a destination exit if one has been specified on the service or subscription.
4. Reads the documents in the destination envelope to be sent, and writes them to a single temporary file. The file is passed to Expedite/CICS.
5. Expedite/CICS saves the file in the Expedite/CICS send file and starts a new task to send the Interchange to IE.
6. MailRoom updates the request status for the documents sent to *FINISH*

Relevant fields to specify in the MailRoom registrations

Ensure these fields are registered before sending:

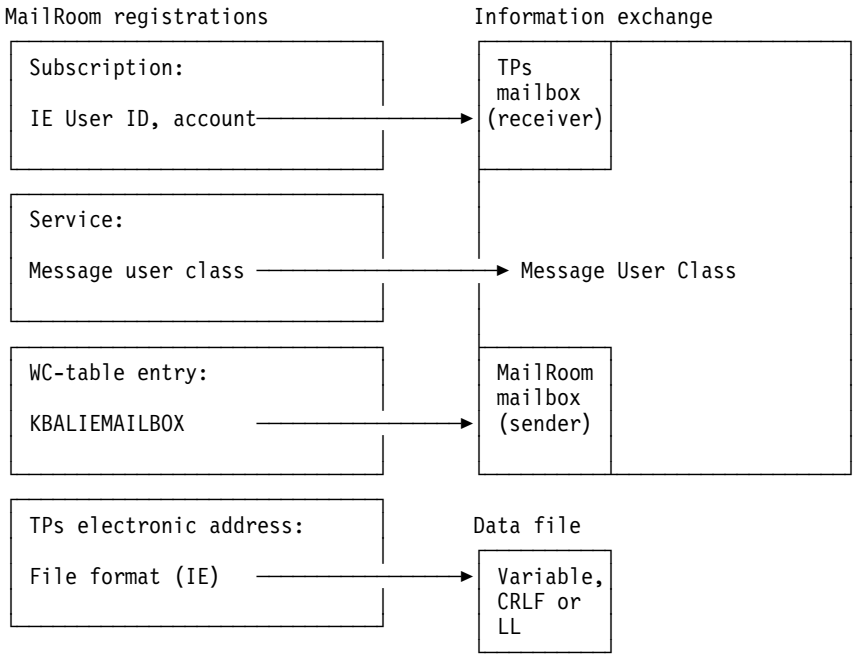

Enable the EXP-DOC destination scenario

Perform these steps:

1. Define an electronic address for the Trading Partner. The address type must be *IE* for an IE Mailbox.

   You must specify which File format is to be used for the transmission.

```
Trading Partner:  123 / 000800000 / Verification TP Inc.

Addressing mode:
Trading Partner. . . . : 123 / 000800000
Address type . . . . . . IE +
Scope of address . . . . 1 +

IE Mailbox:
IE System. . . . . . . . sys_____ +
Account. . . . . . . . . account_
User ID. . . . . . . . . user____
File format. . . . . . . 2 +
```

2. Define a service where the destination is *EXP-DOC*.

   Destination type and destination related information must be entered either on the service or on the receive subscription depending on subscription type and destination type.

   Set the *Message User Class* field and the IE-user ID/Account you defined for the Trading Partner as Electronic address.

   Optionally specify a codepage conversion table to be used before sending.

   Prompt for type of records to send, format of M-record and destination exit.

```
Destination Scenario . . EXP-DOC

Dest: expEDIte File
Message User Class . . . ORDERS
IE User ID, acoount. . . IE: sys  - account  - user_____________ +
Codepage conversion. . . ________ +
Send which records . . . ________ +
Format of M-Record . . . ________ +
Destination Exit . . . . ________ +
```

3. Add the service to the same agreement set as used for the Trading Partner.
4. Make a receive subscription for the Trading Partner to the service. Let the subscription point to the receiver mailbox mentioned above.
5. Use the fastpath command **WCEDIT** to insert a WC-table entry for the sender mailbox. The name of the entry is KBALIEMAILBOX.

The Working Criteria table entry KBALIEMAILBOX

```
KBHWDMIM                Modify Working Criteria Entry

Press Enter to modify WC table Entry



Country code . . . . . : 000

Key. . . . . . . . . . : KBALIEMAILBOX
                         KBALIEMAILBOX

Value. . . . . . . . . . EUR     DKIBM   DKLINK40________
                         sss     aaaaaaaauuuuuuuupppppppp

Comment. . . . . . . . . .
Account and user ID for sender's mailbox used by EXP-DOC destination scen ario
```

Choosing the acknowledgment level in MailRoom

Level	Description
X	N/A (If specified, it will be interpreted as level 0)
0	The document has been sent to sender's IE mailbox.
1	N/A (If specified, it will be interpreted as level 0)
2	N/A (If specified, it will be interpreted as level 0)

EXP-FILE destinations

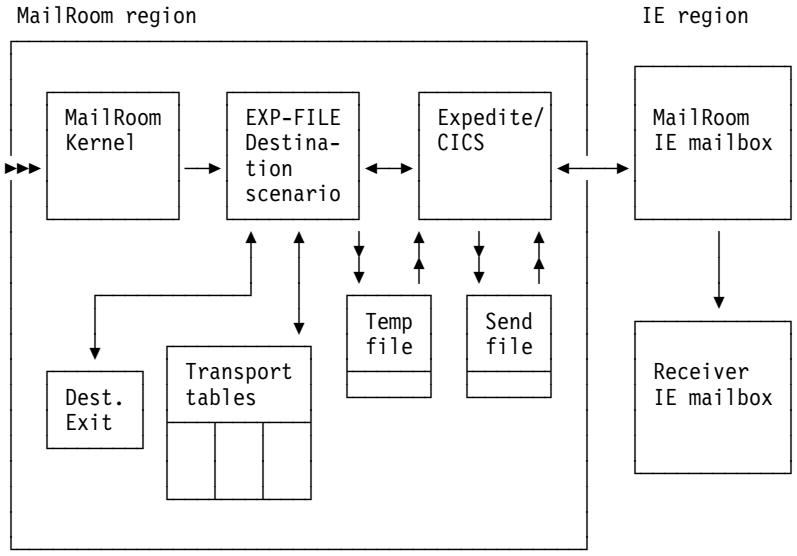

Flow

1. The MailRoom kernel starts the EXP-FILE destination scenario.
2. The EXP-FILE destination scenario will process all documents in the destination envelope.
3. Calls a destination exit if one has been specified on the service or subscription.
4. Passes the documents in a temporary file to Expedite/CICS one by one.
5. Expedite/CICS saves the file in the Expedite/CICS send file and starts a new task to send the Interchange to IE.
6. MailRoom updates the request status for the document sent to *FINISH*.

Relevant fields to specify in the MailRoom registrations

Ensure that following fields are registered before sending:

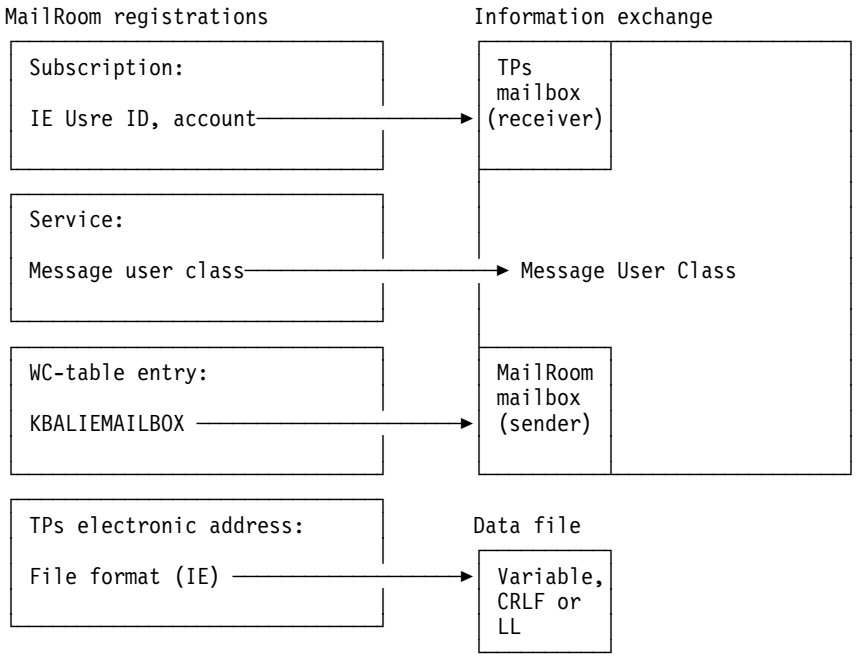

Enable the EXP-FILE destination scenario

Perform these steps:

1. Define an electronic address for the Trading Partner. The address type must be *IE* for an IE Mailbox.

   You must specify which File format is to be used for the transmission.

```
Trading Partner:  123 / 000800000 / Verification TP Inc.

Addressing mode:
Trading Partner. . . . : 123 / 000800000
Address type . . . . . . IE +
Scope of address . . . . 1 +

IE Mailbox:
IE System. . . . . . . . sys_____ +
Account. . . . . . . . . account_
User ID. . . . . . . . . user____
File format. . . . . . . 2 +
```

2. Define a service where the destination is *EXP-FILE*.

   Destination type and destination related information must be entered either on the service or on the receive subscription depending on subscription type and destination type.

   Set the *Message User Class* field.

   Optionally specify a codepage conversion table to be used before sending.

   Prompt for type of records to send and destination exit.

```
Destination Scenario . . EXP-FILE

Dest: expEDIte File
Message User Class . . . ORDERS
IE User ID, account. . . IE: sys  - account  - user_____________ +
Codepage conversion. . . ________ +
Send which records . . . ________ +
Destination Exit . . . . ________ +
```

3. Add the service to the same agreement set as used for the Trading Partner.
4. Make a receive subscription for the Trading Partner to the service. Let the subscription point to the receiver mailbox mentioned above.
5. Use the fastpath command **WCEDIT** to insert a WC-table entry for the sender mailbox. The name of the entry is KBALIEMAILBOX.

The Working Criteria table entry KBALIEMAILBOX

```
KBHWDMIM               Modify Working Criteria Entry

Press Enter to modify WC table Entry



Country code . . . . . : 000

Key. . . . . . . . . . : KBALIEMAILBOX
                         KBALIEMAILBOX

Value. . . . . . . . . . EUR     DKIBM   DKLINK40________
                         sss     aaaaaaaauuuuuuuupppppppp

Comment. . . . . . . . .
Account and user ID for sender's mailbox used by EXP-FILE destination sce nario
```

Choosing the acknowledgment level in MailRoom

Level	Description
X	N/A (If specified, it will be interpreted as level 0)
0	The document has been sent to sender's IE mailbox.
1	N/A (If specified, it will be interpreted as level 0)
2	N/A (If specified, it will be interpreted as level 0)

FAX destinations

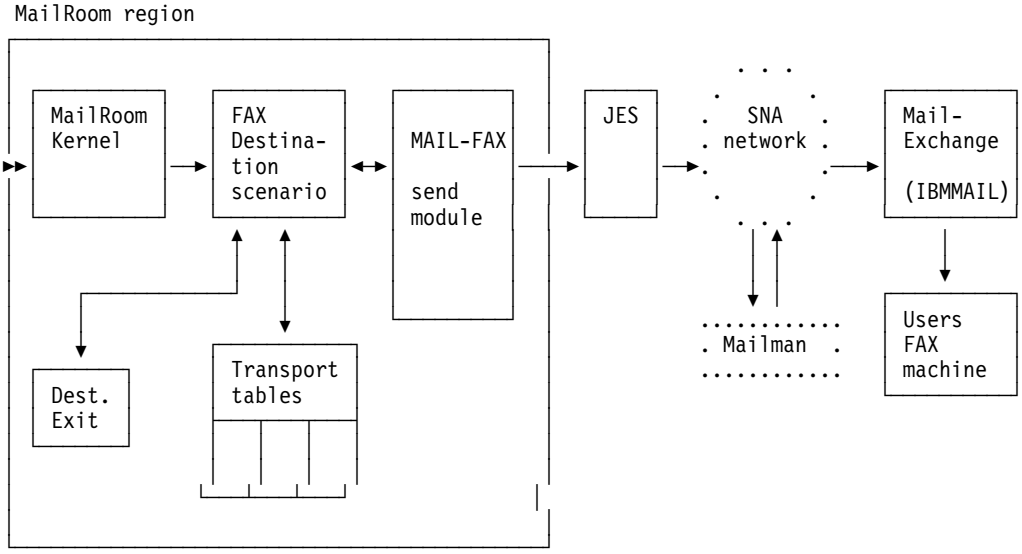

Flow

1. The MailRoom kernel starts the FAX destination scenario.
2. The FAX destination scenario will process all documents in the destination envelope.
3. Calls a destination exit if one has been specified on the service or subscription.
4. Passes the documents to the FAX send program one by one.
5. Transmission to a fax is done via IBM Mail Exchange, by sending a file to *FAX at IBMMAIL*. The file contains IBM Mail Exchange Fax headers with the specified FAX-number as well as the MailRoom document.
6. The file will either be sent directly from MVS to the node IBMMAIL or via the MailMan on VM depending on the setup.
7. When file has been transmitted the related request is set in status *FINISH*.

Enable the FAX destination scenario

Perform these steps:

1. Define an electronic address for the Trading Partner. The address type must be *FX* for a Telefax number.

```
Trading Partner:  123 / 000800000 / Verification TP Inc.

Addressing mode:
Trading Partner. . . . : 123 / 000800000
Address type . . . . . . FX +
Scope of address . . . . 1 +

FAX telephone number:
Phone country code . . . cc_____ +
Phone number . . . . . . nnn nnnn nnnn______
```

2. Define a service where the destination is *FAX*.

Destination type and destination related information must be entered either on the service or on the receive subscription depending on subscription type and destination type.

Prompt for the FAX number if it is not specified on the subscription.

Prompt for type of records to send, format of M-record and destination exit.

```
Destination Scenario . . FAX

Dest: Fax
FAX telephone number . . FX: cc       - nnn nnnn nnnn_____________ +
Subject. . . . . . . . . MailRoom document &3_____________________
FAX attention name . . . Att: Mr. Receiver_____________________
Send which records . . . RAW_____ +
Format of M-Record . . . EXTREC00
Destination Exit . . . . KBGXITP_ +
```

3. Add the service to the same agreement set as used for the Trading Partner
4. Make a receive subscription for the Trading Partner to the service.

Choosing the acknowledgment level

Level	Description
X	N/A (If specified, it will be interpreted as level 0)
0	The document has been sent
1	N/A (If specified, it will be interpreted as level 0)
2	N/A (If specified, it will be interpreted as level 0)

MAIL destinations

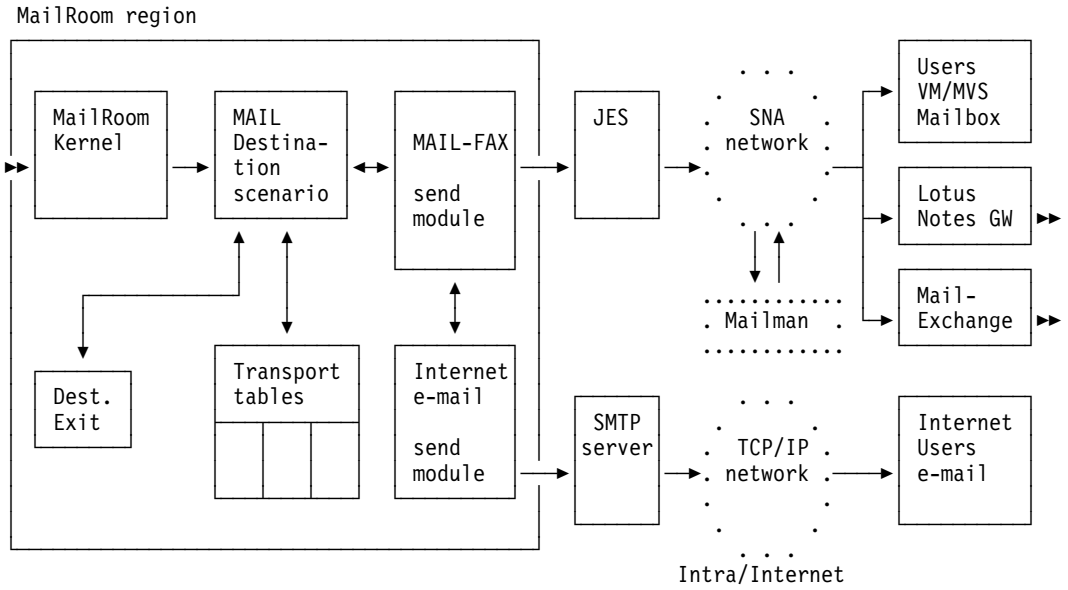

Flow

1. The MailRoom kernel starts the MAIL destination scenario.
2. The MAIL destination scenario will process all documents in the destination envelope.
3. Calls a destination exit if one has been specified on the service or subscription.
4. Passes the documents to the MAIL send program one by one.
5. The final route to the receiver user's mailbox is dependent on the type of the selected electronic address:
   - Mail for SNA destinations (*User ID at Node ID*) will either be sent directly from MVS to the node or via the MailMan on VM depending on the setup.
   - e-mail for Internet will be sent via a nearby SMTP server to the final receipient.
6. When the file or mail has been sent, the related request is set in status *FINISH*.

Enable the MAIL destination scenario

Perform these steps:

1. Define an electronic address for the Trading Partner. The address type must be *HO*, *IN*, *ME* or *TL*. The fields on the electronic address panel is dependent on the selected address type. A user on VM is defined this way:

```
Trading Partner:  123 / 000800000 / Verification TP Inc.

Addressing mode:
Trading Partner. . . . : 123 / 000800000
Address type . . . . . HO +
Scope of address . . . . 1 +

Host address:
User ID. . . . . . . . . XXUSER__
Node ID. . . . . . . . . YYVM1___
```

   An Internet e-mail address is defined this way:

```
Trading Partner:  123 / 000800000 / Verification TP Inc.

Addressing mode:
Trading Partner. . . . : 123 / 000800000
Address type . . . . . HO +
Scope of address . . . . 1 +

Internet e-mail address:
e-mail address . . . . . user@mail.somewhere.com_________________
```

2. Define a service where the destination is *MAIL*.

   Destination type and destination related information must be entered either on the service or on the receive subscription depending on subscription type and destination type.

   Prompt for the Mail address

   Prompt for which type of record to send, M-record format and destination exit. Other mail options are available to further control the final appearance of the mail.

```
Destination Scenario . . MAIL

Dest: Mail
Mail address . . . . . . HO: XXUSER   at YYVM1____________________ +
Send mode. . . . . . . . NOTE____ +
Codepage conversion. . . ________ +
Subject. . . . . . . . . Purchace order &2 has been processed____
Filename . . . . . . . . ________________________________________
Sender override. . . . . ________________________________________
Send which records . . . RAW_____ +
Format of M-Record . . . EXTREC00 +
Destination Exit . . . . ________ +
```

3. Add the service to the same Agreement Set set as used for the Trading Partner.
4. Make a receive subscription for the Trading Partner to the service.

Choosing the acknowledgment level

Level	Description
X	N/A (If specified, it will be interpreted as level 0)
0	The document has been sent
1	N/A (If specified, it will be interpreted as level 0)
2	N/A (If specified, it will be interpreted as level 0)

MQ destinations

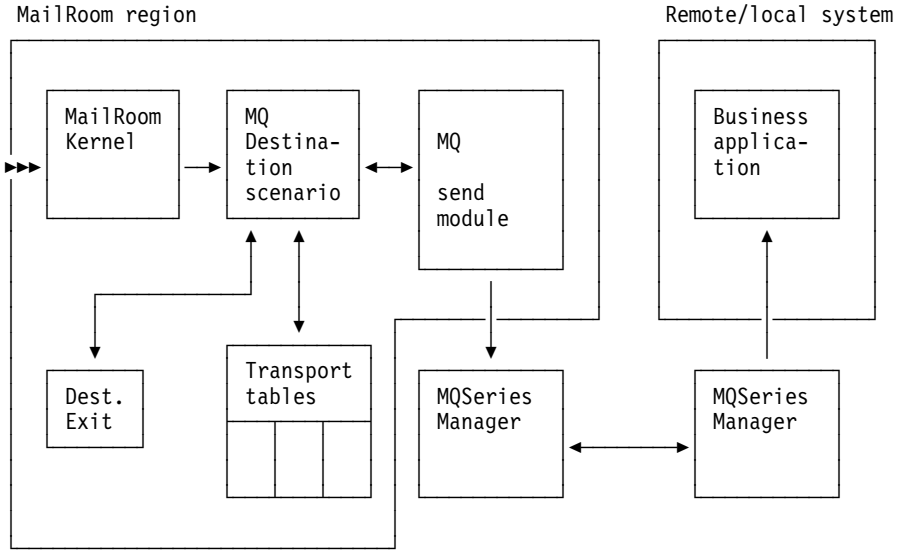

Flow

1. The MailRoom kernel starts the MQ destination scenario.
2. The MQ destination scenario will process all documents in the destination envelope.
3. Calls a destination exit if one has been specified on the service or subscription.
4. Inserts the documents on the MQ queueid specified on the service or subscription.

5. The MQ Manager then triggers the receiving Business Application if controlled by the same MQ manager. If the MQ queue written to is defined as remote, the MQ manager handles the transmission of the documents to the remote MQ manager that controls the remote queue.
6. When the acknowledgment level has been reached the related request is set to status *FINISH*.

Enable the MQ destination scenario

Perform these steps:

1. Define a service where the destination is *MQ*.

   Destination type and destination related information must be entered either on the service or on the receive subscription depending on subscription type and destination type.

   Destination specific fields:

   MQ Manager
   The name of the MQSeries queue manager

   A blank value means the queue manager is local.

   MQ queue
   The name of the MQSeries queue that MailRoom will put the document on.

   It can either be locally defined on the local Queue Manager, or it can be defined on a remote Queue Manager, but it *must* be defined.

   Transmit Datamode
   Specifies how data is put on the MQSeries queue. You can also specify that the data length fields must be adjusted in respect to DBCS shift-in or shift-out characters.

   MQ Reply Queue
   The name of the MQSeries queue that MQSeries will put the technical acknowledgment on. This field is only used when acknowledgment level is 1 or 2 and must be specified in this case. For information of how to define this queue, refer to *Application Programming Guide*.

   Prompt on the queue manager name and Transmit Datamode.

   Prompt on type of records to send, format of M-record and destination exit.

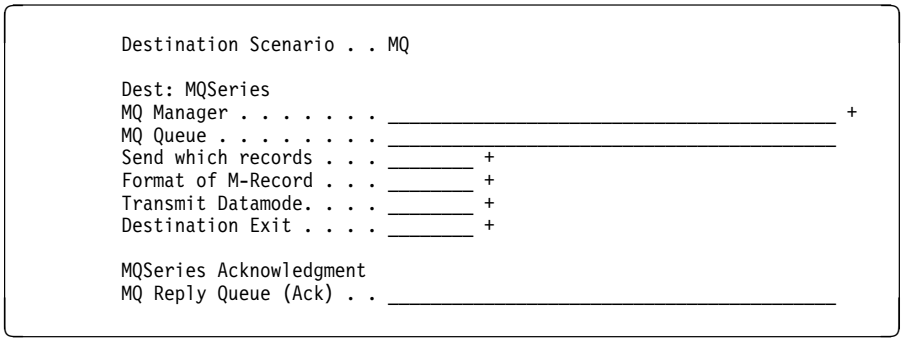

2. Add the service to the same agreement set as used for the Trading Partner.

3. Make a receive subscription for the Trading Partner to the service.
4. Ensure that the MQ queue manager is started and that a connection is active between the CICS region in question and the MQ Manager.
5. Ensure that the MQ queue reference on the service/subscription has been defined.

Choosing the acknowledgment level

Level	Description
X	N/A (If specified, it will be interpreted as level 0)
0	The document has been written to the queue
1	Remote MQ manager has send a technical acknowledgment
2	The server application has processed the document and sent a final acknowledgment to the MailRoom

NULL destinations

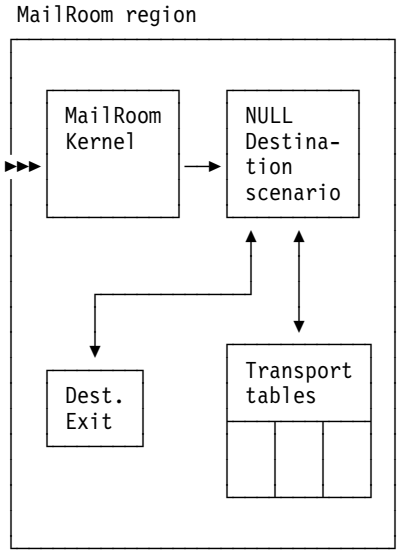

Flow

1. The MailRoom kernel starts the NULL destination scenario.
2. The NULL destination scenario will process all documents in the destination envelope.
3. Calls a destination exit if one has been specified on the service or subscription.
4. As nothing further will happen for a NULL destination, the related request is set to status *FINISH*.

Enable the NULL destination scenario

Perform these steps:

1. Define a service where the destination is *NULL*.

   Destination type and destination related information must be entered either on the service or on the receive subscription depending on subscription type and destination type.

```
Destination Scenario . . NULL

Dest: Null
Send which records . . . ________ +
Format of M-Record . . . ________ +
Destination Exit . . . . ________ +
```

2. Add the service to the same agreement set as used for the Trading Partner.
3. Make a receive subscription for the Trading Partner to the service.

Choosing the acknowledgment level

Level	Description
X	N/A (If specified, it will be interpreted as level 0)
0	The document has been processed to the destination point
1	N/A (If specified, it will be interpreted as level 0)
2	N/A (If specified, it will be interpreted as level 0)

PGM-CICS destinations

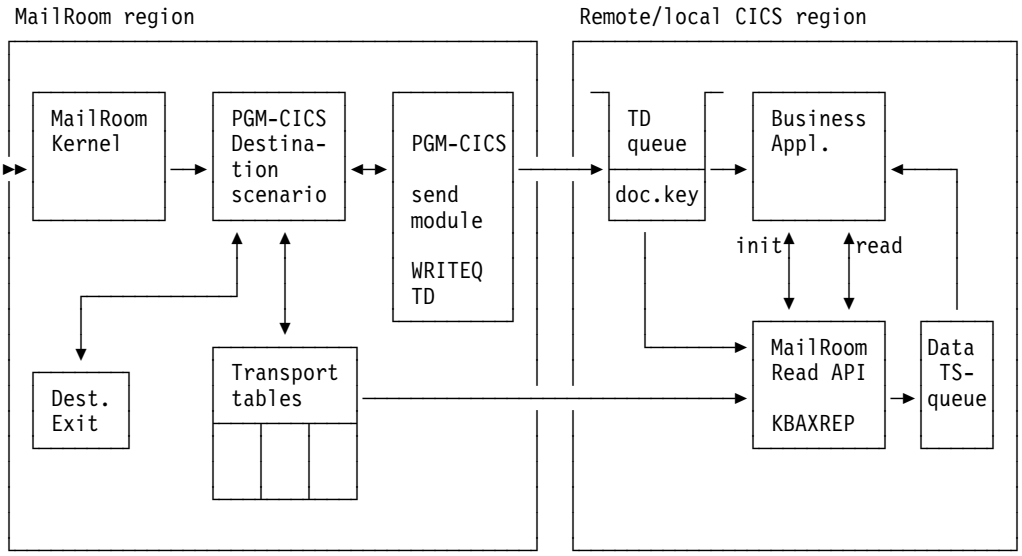

Flow

1. The MailRoom kernel starts the PGM-CICS destination scenario.
2. The PGM-CICS destination scenario will process all documents in the destination envelope.
3. Calls a destination exit if one has been specified on the service or subscription.
4. The document keys are written to the TD-queue specified on the service. This can be a local or remote defined TD-queue with a trigger level defined.
5. The Business application is triggered by the TD-queue every time a new document key is written to the queue. The Business application calls the MailRoom read API twice: first with function code *INIT* to get the document key, second with function code *READ* to get the document. The document is returned in a TS-queue.

6. The Business application can now process the document, and if needed, it can return one or several acknowledgments back to the MailRoom
7. When the acknowledgment level has been reached the related request is set to status *FINISH*.

Enable the PGM-CICS destination scenario

Perform these steps:

1. Define a service where the destination is *PGM-CICS*.

   Destination type and destination related information must be entered either on the service or on the receive subscription depending on subscription type and destination type.

   Destination specific fields:

   CICS TD Queue
   Specifies the name of the TD Queue where the MailRoom must place the transactions when schedule time is up. The TD Queue must be defined in the CICS DCT. It can be defined Local or Remote as circumstances require. It must have a trigger level of One for the program to be triggered immediately.

   Userfield The value of this field is passed to the Business Application invoked by the MailRoom.

   The field name is KBAXDST.SKBA_DST_DATA and is 40 bytes long.

```
Destination Scenario . . PGM-CICS

Dest: Program/CICS
CICS TD Queue. . . . . KBGL
Userfield. . . . . Information passed to application_____
```

2. Add the service to the same agreement set as used for the Trading Partner.
3. Make a receive subscription for the Trading Partner to the service.
4. Add the TD-queue name to the CICS DCT. It must have a trigger level of 1. Also define a transaction in CICS for the transaction you want the TD-queue to start. Let the transaction point at your Business application.
5. Code the Business application. For more information about how to code this Business application, refer to the *Application Programming Guide*.
6. Install your Business application in the same CICS region as the TD queue is defined.

Choosing the acknowledgment level

Level	Description
X	N/A (If specified, it will be interpreted as level 0)
0	The document key has been written to a TD-queue
1	The document has been read by the MR read API
2	The Business application has processed the document and sent a final ACK to MailRoom

SAP destinations

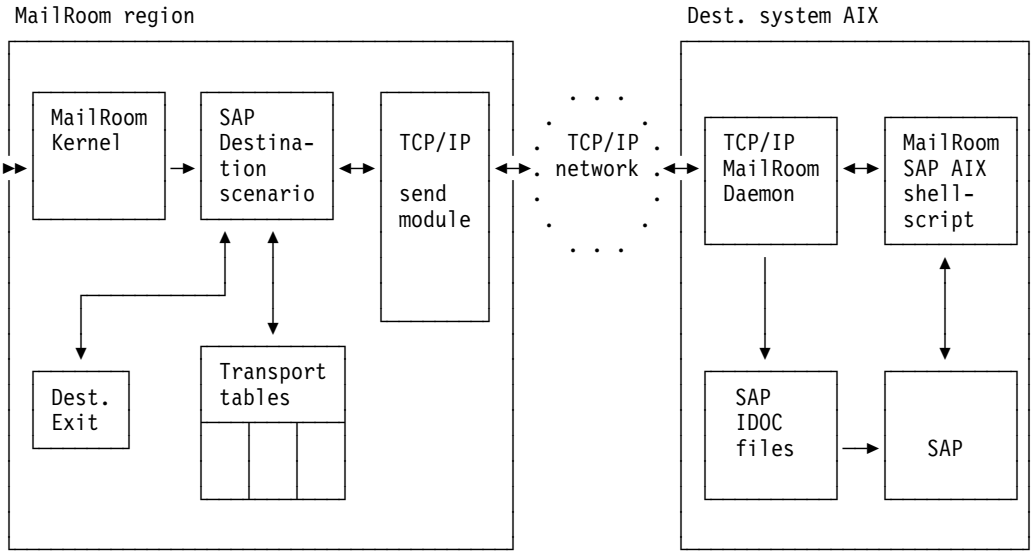

Flow

1. The MailRoom kernel starts the SAP destination scenario.
2. The SAP destination scenario will process all documents in the destination envelope.
3. Builds an EDI_DC record if one is not already present in the data.
4. Calls a destination exit if one has been specified on the service or subscription.
5. Passes the documents to a TCP/IP send program one by one.
6. The TCP/IP send program sends the document to the TCP/IP MailRoom daemon on AIX.
7. The TCP/IP MailRoom daemon writes the document to an IDOC file and starts the MailRoom SAP AIX shellscript.
8. The MailRoom SAP AIX shellscript calls SAP RFC to let SAP receive the IDOC file.
9. When the acknowledgment level has been reached the related requests are set in status *FINISH*.

The setup on AIX

While configuring MailRoom it is assumed that the AIX and SAP installation are already performed as described in the *readme* file delivered with the executable code.

Enable the SAP destination scenario

Perform these steps:

1. Define an electronic address for the Trading Partner. The address type must be *TC* for a TCP/IP Server. Use either the full hostname or the dotted IP address.

```
Trading Partner:  123 / 000800000 / Verification TP Inc.

Addressing mode:
Trading Partner. . . . : 123 / 000800000
Address type . . . . . : TC
Scope of address . . . . 1

TCP/IP server hostname:
Hostname/IP address. . . sapserver.somewhere.xxx.com
```

2. Define a service where the destination is *SAP*.

   Destination type and destination related information must be entered either on the service or on the receive subscription depending on subscription type and destination type.

   Destination specific fields:

   TCP/IP Port number
   Specifies the TCP/IP Port number to be used for this MailRoom Service, when sending documents via TCP/IP. The number specified here must match the Port number used as parameter to the MailRoom TCP/IP Read/Download program in the other end. It is recommended you use port number 1812. In special circumstances, where more than one Read/Download program is executing on the same TCP/IP host machine, you must use different Port numbers for each individual program.

   TCP/IP address
   Specifies the TCP/IP address to be used for this this MailRoom Service. Only addresses of type TC can be used. New addresses can be defined through BTB Central Trading Partner Administration for the Trading Partner number in question.

   Note: Note that this field has some specific layout requirements that must be followed. Always use Prompt to select a new address.

   Codepage conversion
   Specifies a translation table between data stored in an EBCDIC codepage and an ASCII codepage. The tables are based on standard translation tables from IBM CDRA (Character Data Representation Architecture) More translation tables can be ordered from the BTB development team at IBM.

   SAP Logical Msg code
   The SAP Logical Msg code is passed to SAP in the SAP_DC record as field MESCOD, Logical message code.

   SAP System ID
   Passed to SAP in the SAP_DC record as field RCVPOR, Port of Receiving System.

   SAP Receiver TP Type
   The SAP Receiver TP Type must be a valid SAP Partner type.

   The valid Partner types must be added to the SUNDRY-table (key: *KBA*,*000*,*UK*,*SAPRCVTY*).

SAP Sender TP Type

The SAP Sender TP Type must be a valid SAP Partner type.

The valid Partner types must be added to the SUNDRY-table (key: *KBA,000,UK,SAPRCVTY*).

Prompt for TCP/IP address and codepage conversion table to be used for EBCDIC to ASCII conversion.

Prompt for a SAP Receiver TP Type and SAP Sender TP Type.

Prompt Destination Exit.

```
Destination Scenario . . SAP

Dest: SAP/R3
TCP/IP Port number . . . 01812
TCP/IP address . . . . . TC: sapserver.somewhere.xxx.com_________ +
Codepage conversion. . . CP500819 +
SAP Logical Msg code . . ___
SAP System Id. . . . . . __________
SAP Receiver TP Type . . __ +
SAP Sender TP Type . . . __ +
Destination Exit . . . . ________ +
```

3. Add the service to the same agreement set as used for the Trading Partner.
4. Make a receive subscription for the Trading Partner to the service.

Choosing the acknowledgment level

Level	Description
X	N/A (If specified, it will be interpreted as level 1)
0	N/A.
1	SAP has got the document in the SAP files
2	N/A (If specified, it will be interpreted as level 1)

SAP-MQ destinations

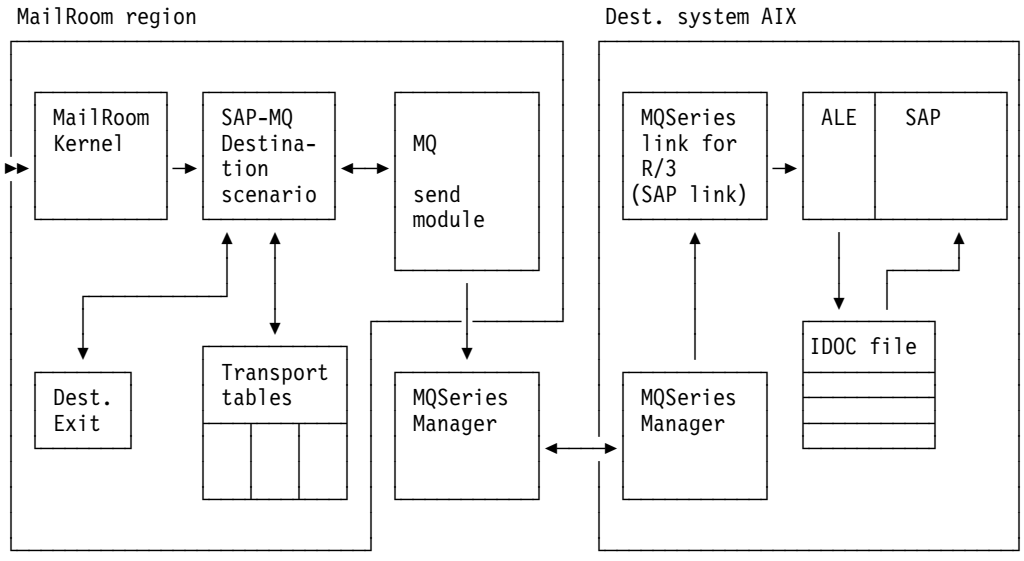

Flow

1. The MailRoom kernel starts the SAP-MQ destination scenario.
2. The SAP-MQ destination scenario will process all documents in the destination envelope.
3. Builds an EDI_DC or EDI_DC40 record if one is not already present in the data.
4. Calls a destination exit if one has been specified on the service or subscription.
5. Inserts the documents on the MQ queueid specified on the service or subscription.
6. The MQ Manager then sends the documents to the MQ manager located on the AIX server.
7. On the AIX server document are written to SAP via MQSeries Link for R/3 and then through SAP Application Link Enabling (ALE).
8. When the acknowledgment level has been reached the related requests are set in status *FINISH*.

Setup on AIX

While configuring MailRoom it is assumed that the AIX and SAP installation are already performed as described in the *readme* file delivered with the executable code.

Enable the SAP-MQ destination scenario

Perform these steps:

1. Define a service where the destination is *SAP-MQ*.

   Destination type and destination related information must be entered either on the service or on the receive subscription depending on subscription type and destination type.

   Destination specific fields:

   MQ Manager

   The MQ Manager is the name of the MQSeries queue manager, that controls the queue used.

   A blank value means the queue manager is local.

   MQ queue

   The MQ queue is the name of the MQSeries queue that MailRoom will put the document on.

   It can either be locally defined on the local Queue Manager, or it can be defined on a remote Queue Manager, but it *must* be defined.

   Transmit Datamode

   The Transmit Datamode specifies if it is a normal SAP IDOC segments, or if the segments contain DBCS shift-in/shift-out characters. If this is specified the length of the SAP IDOC segments can exceed 1055 or 1063 bytes, depending on whether it is SAP IDOC Version 3 or 4 that is used.

   SAP R/3 Version

   The SAP R/3 Version is used by the MailRoom to determine the format of the SAP IDOC EDI control header. If space or V3 the SAP

R/3 Version 3 IDOC Header EDI_DC will be built. If V4 the SAP R/3 Version 4 IDOC Header EDI_DC40 will be built. The default value is space.

SAP Logical Msg code
The SAP Logical Msg code is passed to SAP in the SAP_DC record as field MESCOD, Logical message code.

SAP System Id
The SAP System Id is passed to SAP in the SAP_DC record as field RCVPOR, Port of Receiving System.

SAP Receiver TP Type
The SAP Receiver TP Type must be a valid SAP Partner type.

SAP Sender TP Type
The SAP Sender TP Type must be a valid SAP Partner type.

SAP IDoc type
This field is passed to SAP in the EDI_DC40 record as field IDOCTYP. This field is only used when working with SAP R/3 Version 4 IDOCs.

SAP Extension type
This field is passed to SAP in the EDI_DC40 record as field CIMTYP. This field is only used when working with SAP R/3 Version 4 IDOCs.

SAP Logical message ty
This field is passed to SAP in the EDI_DC40 record as field MESTYP. This field is only used when working with SAP R/3 Version 4 IDOCs.

SAP EDI message type
This field is passed to SAP in the EDI_DC40 record as field STDMES. This field is only used when working with SAP R/3 Version 4 IDOCs.

MQ Reply queue
The MQ reply queue is the name of the MQSeries queue that MQSeries will put the technical acknowledgment on. This field is only used when acknowledgment level is 1 and must be specified in this case. For information of how to define this queue, refer to *Application Programming Guide*.

Prompt for a SAP Receiver TP Type and SAP Sender TP Type.

Prompt for a destination exit.

```
Destination Scenario . . SAP-MQ

Dest: SAP/R3 (MQSeries)
MQ Manager . . . . . _____________________________________________ +
MQ Queue . . . . . _____________________________________________
Transmit Datamode. . . . ________ +
SAP R/3 Version. . . . . ________ +
SAP Logical Msg code . . ___
SAP System Id. . . . . __________
SAP Receiver TP Type . . __ +
SAP Sender TP Type . . . __ +
SAP IDoc type. . . . . _____________________________
SAP Extension type . . . _____________________________
SAP Logical message ty.. _____________________________
SAP EDI Message type . . ______
Destination Exit . . . . ________ +

MQSeries Acknowledgment
MQ Reply Queue (Ack) . . _____________________________________________
```

2. Add the service to the same agreement set as used for the Trading Partner.
3. Make a receive subscription for the Trading Partner to the service.

Choosing the acknowledgment level

Level	Description
X	N/A (If specified, it will be interpreted as level 0)
0	The document has been written to the MQ queue
1	Remote MQ manager has sent a technical ACK.
2	N/A (If specified, it will be interpreted as level 0)

TCPIP destinations

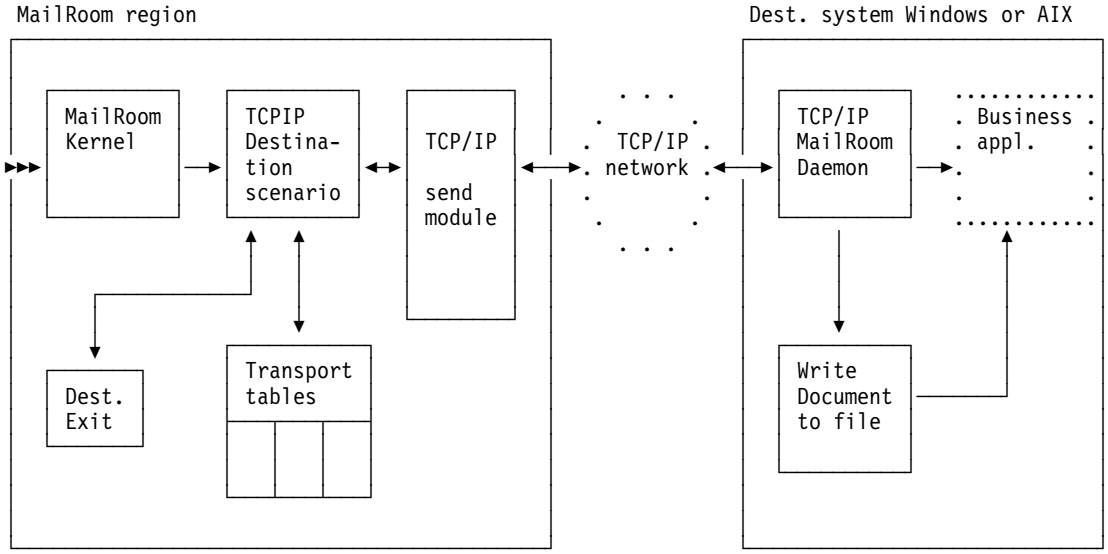

Flow

1. The MailRoom kernel starts the TCPIP destination scenario.
2. The TCPIP destination scenario will process all documents in the destination envelope.
3. Calls a destination exit if one has been specified on the service or subscription.
4. Passes the documents to a TCP/IP send program one by one.
5. The TCP/IP send program sends the document to the TCP/IP MailRoom daemon on Windows or AIX.
6. The TCP/IP MailRoom daemon writes the document to a file and optionally starts a business application to process the file.
7. When the acknowledgment level has been reached the related requests are set in status *FINISH*.

Enable the TCPIP destination scenario

Perform these steps:

1. Define an electronic address for the Trading Partner. The address type must be *TC* for a TCP/IP Server. Use either the full hostname or the dotted IP address.

```
Trading Partner:  123 / 000800000 / Verification TP Inc.

Addressing mode:
Trading Partner. . . . : 123 / 000800000
Address type . . . . . : TC
Scope of address . . . . 1

TCP/IP server hostname:
Hostname/IP address. . . myserver.somewhere.xxx.com
```

2. Define a service where the destination is *TCPIP*.

   Destination type and destination related information must be entered either on the service or on the receive subscription depending on subscription type and destination type.

   Enter the port number.

   Prompt for TCP/IP address and codepage conversion table to be used for EBCDIC to ASCII conversion.

   Prompt for type of records to send, format of M-record and destination exit.

```
Destination Scenario . . TCPIP

Dest: TCP/IP
TCP/IP Port number . . . 01812
TCP/IP address . . . . . TC: myserver.somewhere.xxx.com_________ +
Codepage conversion. . . CP500819 +
Send which records . . . ________ +
Format of M-Record . . . ________ +
Destination Exit . . . . ________ +
```

3. Add the service to the same agreement set as used for the Trading Partner.
4. Make a receive subscription for the Trading Partner to the service.

Choosing the acknowledgment level

Level	Description.
X	N/A (If specified, it will be interpreted as level 0)
0	The document has been written to a file on the receivers machine
1	N/A (If specified, it will be interpreted as level 0)
2	Business application has processed the document and sent a final ACK to MailRoom

TIE-IMS destinations

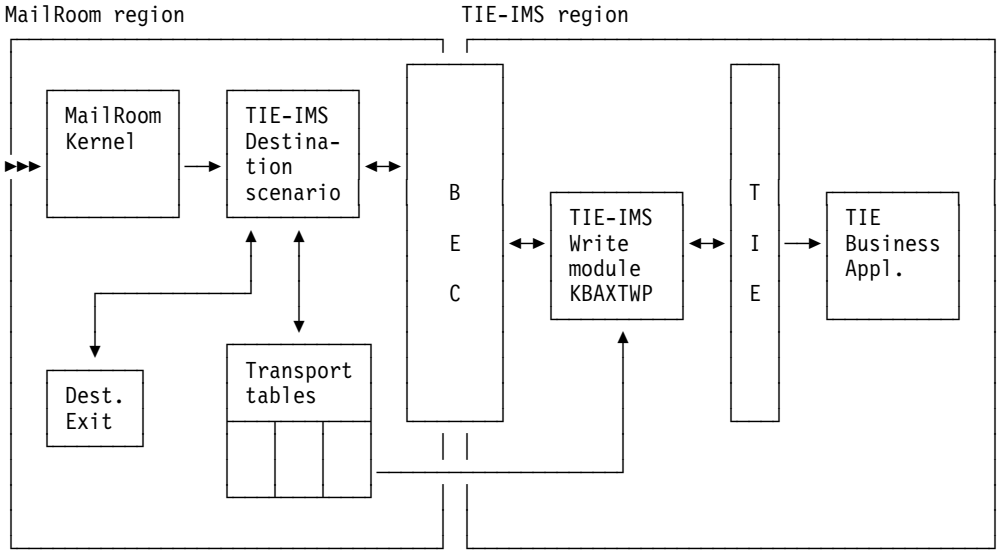

Flow

1. The MailRoom kernel starts the TIE-IMS destination scenario.
2. The TIE-IMS destination scenario will process all documents in the destination envelope.
3. Calls a destination exit if one has been specified on the service or subscription.
4. Passes the document keys in the destination envelope to BEC, one by one.
5. BEC reads the BEC registrations for the link name to the IMS-region and passes the document key to the TIE-IMS Write module.
6. The TIE-IMS Write module reads the document from the transport tables and writes it to TIE. Control is passed back to the MailRoom.
7. Depending on the acknowledgment level given, the MailRoom sets the status of the document to either *FINISH* or *PENDING*.
8. TIE starts the Business application (TIE BTX).
9. The Business application reads data from TIE and processes it.
10. When the acknowledgment level has been reached the related request is set to status *FINISH*.

Dependencies between MailRoom resources and TIE-IMS definitions

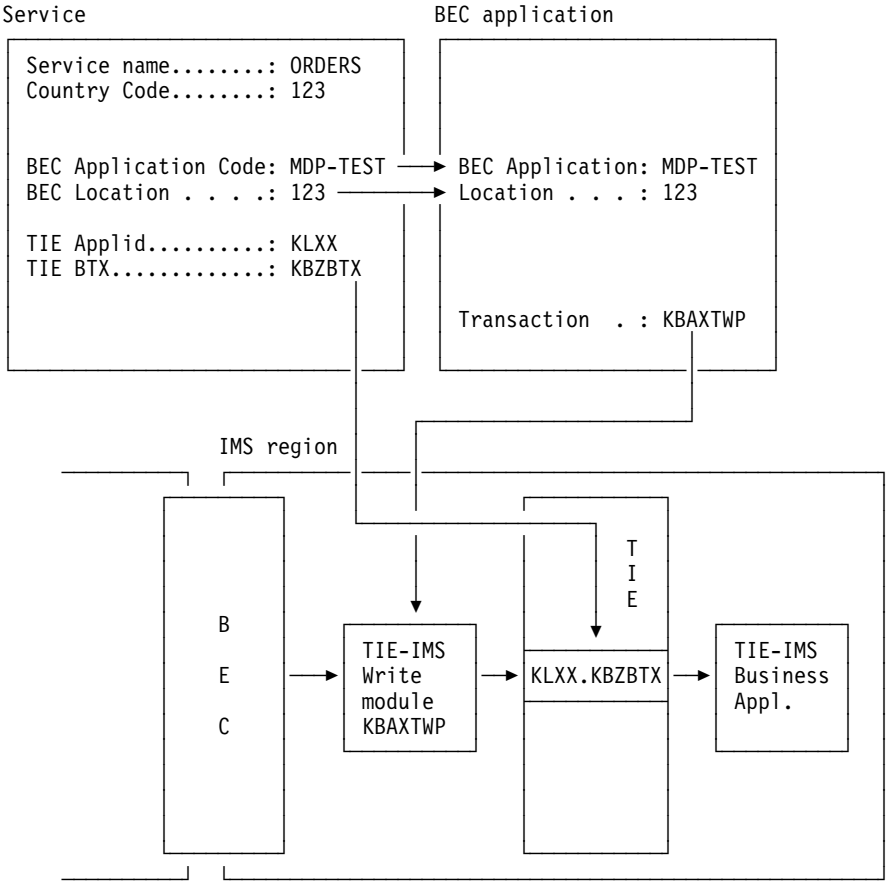

Enable the TIE-IMS destination scenario

Perform these steps:

1. Use fastpath **BECDST** to define a BEC destination. This tells BEC which region the document will be sent to, and which protocol is used.
2. Use fastpath **BECAPL** to define a BEC application. This tells BEC which transaction to start in the IMS region and also which BEC destination is used.
3. Define a service where the destination is *TIE-IMS*.

   Destination type and destination-related information must be entered either on the service or on the receive subscription depending on subscription type and destination type.

   Enter the TIE BTX and TIE APPLID.

   Enter the BEC destination and BEC application.

```
Destination Scenario . . TIE-IMS

Dest: ECMVS TIE/IMS
TIE Appl Id. . . . . . . KBAZ
TIE BTX name . . . . . . KBAZDSSC
BEC Location . . . . . . 123_____ +
BEC Application Code . . MDP-TST_________ +
```

4. Add the service to the same agreement set as used for the Trading Partner.

5. Make a receive subscription for the Trading Partner to the service.

Setting up TIE

On the system where TIE is installed, set up the Appl and BTX named in the service. Perform all other necessary TIE definitions according to the TIE documentation.

Choosing the acknowledgment level

Level	Description
X	N/A (If specified, it will be interpreted as level 0)
0	The document has been written to TIE
1	TIE is able to start an acknowledgment transaction
2	BA has processed the document and sent a final ACK to MailRoom

TIE-MQ destinations

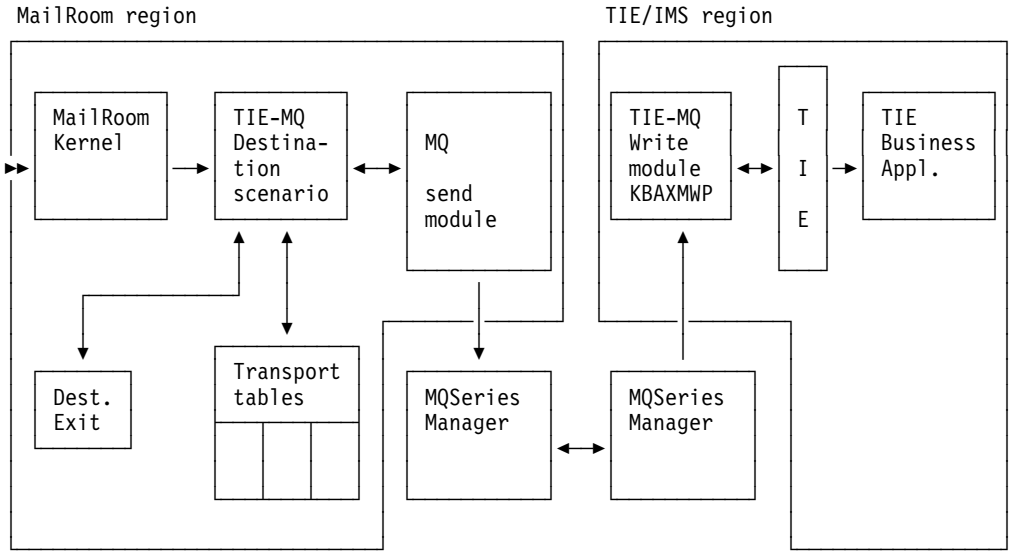

Flow

1. The MailRoom kernel starts the TIE-MQ destination scenario.
2. The TIE-MQ destination scenario will process all documents in the destination envelope.
3. Calls a destination exit if one has been specified on the service or subscription.
4. Inserts the documents on the MQ queueid specified on the service or subscription.
5. The MQ Manager then triggers the TIE-MQ Write module if controlled by the same MQ manager. If the MQ queue written to is defined as remote, the MQ manager handles the transmission of the documents to the remote MQ manager that controls the remote queue.
6. The TIE-Write module for TIE-MQ reads the document from the MQSeries queue and uses additional control information at the end of the transmission to build the structures for TIE-Write. Then TIE-Write is performed and TIE will trigger the receiving TIE business application.

7. Depending on the acknowledgment level given, the MailRoom sets the status of the document to either *FINISH* or *PENDING*.
8. TIE starts the Business application (TIE BTX).
9. The Business application reads data from TIE and processes them.
10. When the acknowledgment level has been reached the related request is set to status *FINISH*.

Enable the TIE-MQ destination scenario

Perform these steps:

1. Define a service where the destination is *TIE-MQ*.

   Destination type and destination related information must be entered either on the service or on the receive subscription depending on subscription type and destination type.

   Enter the TIE BTX and TIE Applid.

   Enter the MQSeries queue manager and queue name, and queue name for acknowledgments. This queue will also be used to send an acknowledgments recording the success of the TIE Write on the IMS system.

   Determine which records must be sent to MQSeries and determine the format of the M-Record.

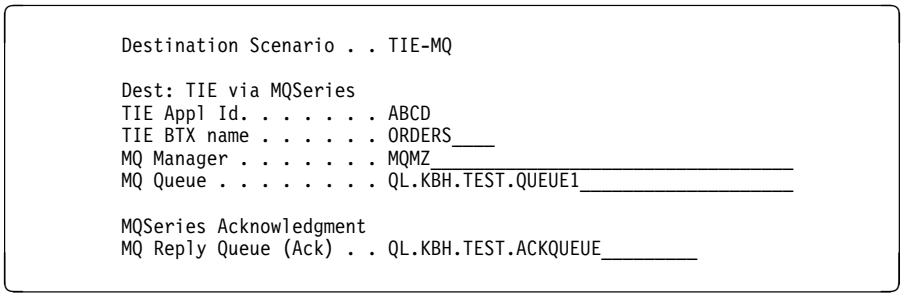

2. Add the service to the same Agreement Set set as used for the Trading Partner.
3. Create a receive subscription for the Trading Partner to the service.
4. Ensure the MQSeries queues are created. There is a sample to aid this included with the package and documented in the Installation guide.

At the remote (IMS) site:

1. The MQSeries queue must trigger transaction KBAXMW0.
2. If the TIE-WRITE for MQSeries module encounters an error it uses MQSeries to report to the MailRoom. The name of the error queue is obtained from the KBDTMT table. Ensure that there is a default entry in this table with the key set to asterisks and the error queue set to the correct MQSeries queue.
3. Set up the TIE application and BTX as specified in the subscription to receive your documents.

Choosing the acknowledgment level

Level	Description
X	N/A (If specified, it will be interpreted as level 0)
0	The document has been written to the MQSeries queue and passed to TIE.
1	MQSeries was able to send the document and TIE is able to start an acknowledgment transaction
2	BA has processed the document and sent a final ACK to MailRoom

The system acknowledgment scenarios

The abbreviation *SYSACK* will be used for *system acknowledgment*. The administrator can specify that a sysack document must be returned to a Business application when a request/document reaches a final status.

The final status will be *FAIL*, *FINISH* or *PEND.OVD*.

If a SYSACK is required, the SYSACK destination type and destination- specific parameters are specified on the service. Or, in case of subscription type *T* or *X*, on the source subscription. These parameters are exactly the same parameters as specified for the destinations.

These are the SYSACK destination types:

- PGM-CICS
- TIE-IMS
- TIE-MQ
- MQ
- MAIL

For more information on how to specify the SYSACK destinations see the corresponding destination scenarios PGM-CICS, TIE-MQ, MQ, MAIL and TIE-IMS.

The Business application receiving the SYSACK document

In a CICS environment

The Business application is triggered by the TD-queue specified in the SYSACK parameters every time a document key is written to the queue. The Business application calls the MailRoom read API twice— first with function code *INIT*. to get the document key, second with function code *READ* to get the SYSACK document. The document is returned in a TS-queue. The MailRoom read API is called the same as if it was a *normal* document. A switch on the document key is used to indicate that it must look for the SYSACK structure and not the original document in this situation. If the Business Application needs to retrieve the original document as well as the SYSACK control structure, it can use the MailRoom Document Browser API after the call to the MailRoom read API.

Note: You can send up to 40 bytes of extra data to the Business Application using the SYSACK *Userfield* on the Service or Subscription.

In a TIE/IMS environment

The Business application is triggered from TIE, and it can read the SYSACK document from the TIE Application and Recipient to which the data has been mapped. The TIE Application and BTX are specified in the SYSACK parameters. Under the BTX a RIF of type *single* must be defined with the name SYSACK and format as described here, and another RIF (type *single*) for the Destination control record. The *RIFname* must be KBAXDST and the length is 500 chars. For information about the format of this record, refer to the *Application Programming Guide*.

The developer of the Business Application can map all or any of the fields on these records to Layouts under a TIE Recipient defined under another TIE application and allow this Recipient to trigger the Business Application.

In a MAIL environment

A note is created containing the SYSACK control structure and a few lines of formatted text describing the final status of the document. The note is sent to the address specified on the service.

In a TIE-MQ environment

The Business application is triggered from TIE, and it can read the document from the TIE Application and Recipient to which the data has been mapped. The TIE Application and BTX are specified in the SYSACK parameters. TIE must be set up as described here in "In a TIE/IMS environment." Using this scenario you can send the document or only the M-record, as well as the SYSACK control record and the Destination control record. The MQSeries queue named in the SYSACK parameters must be set up trigger the standard BTB TIE-MQ-WRITE module. For information refer to the *Application Programming Guide*.

In an MQSeries environment

In this scenario, you can send the document or only the M-record as well as the SYSACK control record. These will be added to the MQSeries buffer in that order, (M-Record, data records, control record). It is the responsibility of the Business application to ensure the MQSeries queue named in the SYSACK parameters is set up, and to retrieve the data from this queue.

Panel fields for TIE-MQ and MQ SYSACK scenarios

```
Dest: MQSeries
MQ Manager . . . . . _____________________________________________ +
MQ Queue . . . . . _____________________________________________
Send which records . . . ________ +
Format of M-Record . . . ________ +
Transmit Datamode. . . . ________ +
```

The panel choices for TIE-MQ and MQ SYSACK are a subset of the choices available when sending data to an MQ destination.

Press F4 in the *Send which records* field to get a prompt list of possible values:

```
________  Control record only
CNTL      Control record only
MCNTL     M record followed by control record
MDCNTL    M and D records plus control record
```

For information about what to enter into the fields, refer to online help.

Summary of SYSACK options

SYSACK type	Data	Description
PGM-CICS	SYSACK control record. Document data can be retrieved from the tranport tables by use of document browse API (for information refer to the *Application Programming Guide*).	Business application is triggered by the MailRoom. Business application retrieves the data from the transport tables.
TIE-IMS	SYSACK control record and Destination control record (KBAXDST)	BTB TIE-WRITE routine is triggered by MailRoom, retrieves the data from the MailRoom and writes it to TIE. Business application is triggered by TIE.
TIE-MQ	Default: SYSACK control record and Destination control record (KBAXDST). M and D records or only M-record can also be requested.	BTB MailRoom writes the required data to the MQSeries queue from where it is written to TIE. Business application is triggered by TIE.
MQ	Default: SYSACK control record and Destination control record (KBAXDST). M and D records or only M-record can also be requested.	BTB MailRoom writes the required data to the MQSeries queue.
MAIL	SYSACK control record.	BTB MailRoom writes a note containing some of the information from the SYSACK control record. At the bottom of the note the SYSACK control record is printed.

Format of a SYSACK document

Field name	Length	Description
EYECATCHER	008	Eyecatcher: *SYSACK*
SKBA_ENV_DER	012	Derived envelope key
SKBA_DOCSEQNO_NUM	010	Document sequence number in the source envelope
FILLER	018	Reserved
SKBA_ACKLVL	001	Acknowledgment level specified on service. Decides how far the MailRoom must monitor sending of the document. **X**: Monitor until it has been sent (Only for Dest. DI-EDI). **0**: Monitor until it has been sent. **1**: Monitor until it has been received at the destination. **2**: Monitor until it has been processed at the destination.
SKBA_ACKLVL_NOW	001	The acknowledgment level the document was in when it reached the final status. **Blank**: The document failed before sending. **X**: The document has been sent (Only for Dest. DI-EDI). **0**: The document has been sent. **1**: The document has been received at the destination. **2**: The document has been processed at the destination.
SKBA_ACK_INDICATOR	001	The status of the document/request in the MailRoom **0**: The document is FINISHED. **4**: The document is PENDING OVERDUE. The document can be restarted from the MailRoom **8**: The document is FAILED.
DSYSRPT	026	Time when request was inserted
IOPUCTY	003	Country code
ICUSPRM_FROM	009	From Trading Partner number
SKBA_LAYOUT	016	MailRoom layout
SKBA_REF_DATA	040	Document reference data
SKBA_ENV_SRC	012	Source envelope key
SKBA_ENV_DST	012	Destination envelope key
SKBA_TYPE_SRC	008	Source scenario type
SKBA_TYPE_DST	008	Destination scenario type
SKBA_ORIGINATOR	080	Originator from request
ICUSPRM_TO	009	To Trading Partner number
FILLER	022	Future use
ISYSIDY	004	Application id from service

Chapter 9. MailRoom supplied exits

MailRoom supplied source exits

Some standard source exits are supplied with BTB. These exits are described here.

BTB standard MQ, SAP-MQ & TIE-MQ Unpack Exit KBASUMP

For MQSeries based source scenarios the default is to use this exit to unpack the received MQ buffer into records in one or more TS queues. The exit can decode the MQSeries Link for SAP R/3 buffer format and the BTB MailRoom buffer format.

Usage Defined as MailRoom global Unpack Exit for the following source scenarios: MQ, SAP-MQ, TIE-MQ

Override None, done in Source Exit

Reuse You can reuse this exit as a specific exit via source exit administration panels.

BTB standard DI-EDI Source Exit KBASXDP

For the DI-EDI source scenario the default is to use this exit to build an M-record based on the received Inhouse format and used response program.

Usage Defined as MailRoom global Source Exit for the DI-EDI source scenario.

Override Individual fields in the M-record can be overridden.

Reuse You can reuse this exit as a specific exit via source exit administration panels.

BTB standard EXP-FILE Source Exit KBASXFP

For the EXP-FILE source scenario the default is to use this exit to build an M-record based on the message user class and the sender mailbox. Normally a simple M-record is built, but by overriding the To TP it is possible to change this to an extended M-record.

Usage Defined as MailRoom global Source Exit for the EXP-FILE source scenario.

Override Individual fields in the M-record can be overridden.

Reuse You can reuse this exit as a specific exit via source exit administration panels.

BTB XML Processor Source Exit KBASXMP

This exit can parse a received XML document and extract elements or attributes to be used in the M-record. The XML root element must be defined in the MailRoom XML Document definition table. Documents with M- and D-records are also accepted transparently.

Usage Not defined as global Source Exit for any source scenario. The exit must explicitly be activated for a scenario.

© Copyright IBM Corp. 1992, 2002

Override Individual fields in the M-record can be overridden.

Reuse Can be used as both global or specific source exit via source exit administration panels. You can thereby enhance e.g. the TCPIP source scenario to both accept M- and D-records as well as XML documents or you can enable the XML support for a single MQ queue.

BTB standard SAP & SAP-MQ Source Exit KBASXSP

For the SAP and SAP-MQ source scenarios the default is to use this exit to build an M-record based on the SAP EDI_DC control record in the received IDOC.

Usage Defined as MailRoom global Source Exit for the SAP and SAP-MQ source scenarios.

Override Individual fields in the M-record can be overridden.

Reuse You can reuse this exit as a specific exit via source exit administration panels.

BTB Sample Source Exit KBGXSXP

This exit is a sample program that can be used as a starting point when writing a new source exit.

Usage Normally not used.

Override Individual fields in the M-record can be overridden.

Reuse You can use this exit to simply hardcode an M-record via source exit administration panels.

MailRoom supplied document exits

Some standard exits are supplied with BTB. These exits are described here.

SAP to DI standard exit KBADXDP

Destination exit used to convert SAP IDOCs to DI in-house format when destination is DI-EDI.

The exit removes underscores from the record name and expands the key from 10 to 16 characters. The exit also maps the external Trading Partner id to the C-record, which is used by DataInterchange to match the Trading Partner.

DI to SAP standard exit KBADXSP

Destination exit used to convert DI inhouse format to SAP IDOC when destination is SAP or SAP-MQ.

The exit inserts underscores in the record name where needed and decreases the key from 16 to 10 characters. The exit also populates all records with the SAP client number. The exit will not modify the *EDI_DC* record.

Codepage conversion exit KBAGXCP

Kernel or destination exit used to perform codepage conversion of a document. The conversion will normally be from one EBCDIC codepage to another EBCDIC codepage. This can be necessary if a document is sent to MailRoom in one EBCDIC codepage and the receiver needs it in another EBCDIC codepage. The example shown here uses the kernel exit. Use the Insert New MailRoom Service panel to set up the codepage conversion exit parameters. Figure 50 shows the relevant section of the panel.

```
KBEICM1I                Insert new MailRoom Service                      IMB

Press Enter to insert new MailRoom Service

Kernel processing
Extended Logging . . . . ________ +
Priority level . . . . . ________ +
Kernel Exit  . . . . . . KBAGXCP_ +
Exit parameters. . . . . ____________________________________________

Codepage conv exit parm
Codepage conversion. . . CP500297 +

Command  ===>
F1=Help      F3=Exit      F4=Prompt    F8=Forward   F12=Cancel
```

Figure 50. Setting up the codepage conversion exit parameters

You must specify the following value. You can get help the field by pressing F1.

Codepage conversion

The name of a codepage conversion table. The name `CPee1ee2` identifies the origin codepage (ee1) and the target codepage (ee2). Both codepages will normally be EBCDIC codepages.

DataInterchange translation exit KBAGXDP

Kernel or destination exit used to let DataInterchange perform translation of a document. The example shown here uses the kernel exit. Use the Insert New MailRoom Service panel to set up the DataInterchange exit parameters. Figure 51 on page 156 shows the relevant section of the panel.

```
KBEICM1I                Insert new MailRoom Service                      IMB

Press Enter to insert new MailRoom Service

Kernel processing
Extended Logging . . . . ________ +
Priority level . . . . . ________ +
Kernel Exit  . . . . . . KBAGXDP_ +
Exit parameters. . . . . ________________________________________

DI Exit parameters
Conversion mode. . . . . IHF-EDI_________ +
TS Queue for IHF . . . . ________
DI Application Id. . . . ________
DI TRANSLATE parms . . . ________________________________________
Codepage conversion. . . ________ +

Command  ===>
F1=Help      F3=Exit      F4=Prompt    F8=Forward   F12=Cancel
```

Figure 51. Setting up the DataInterchange exit parameters

You should consider specifying the following values. You can get help for each field by pressing F1.

Conversion mode

The Conversion mode defines how the Exit will translate the input file. Three modes are defined:

IHF-EDI In-house Format to EDI format.

EDI-IHF EDI data to in-house format.

MAIL-EDI-IHF EDI data (in an e-mail) to in-house format.

The translated document is kept as an updated version of the original document.

TS Queue for IHF

This queue name must be the same name as described under usage in DataInterchange. The queue is where the in-house format data is placed by DataInterchange after translation.

DI Application Id

The DI Application Id is used by DataInterchange to select which log file to use.

DI TRANSLATE parms

The DI TRANSLATE parms are used to append commands to the "PERFORM TRANSLATE" command issued when the documents are translated by DataInterchange.

Codepage conversion

If the destination document must be delivered in a different codepage, it can be entered here. The codepage file in CICS must be loaded. The format is CPffftttt where fff is the from and ttt is the to codepage. A more detailed explantion is available under online help.

Usage notes

It is very important to specify the IHF TS queue name when translating to in-house format, as BTB otherwise can not find the translated data.

MQSI V1 exit KBAGXQP

Kernel or destination exit used to let an MQSI perform remapping of a document. MQSI should normally run in the same physical machine as BTB. The exit will format a document to a stream format (records separated with character delimitors), put it on a queue, wait for MQSI to reformat it, get the reformatted stream and finally return it to MailRoom as an updated version of the document.

The example shown here uses the kernel exit. Use the Insert New MailRoom Service panel to set up the MQSI exit parameters. Figure 52 shows the relevant section of the panel.

```
KBEICM1I                Insert new MailRoom Service                      IMB

Press Enter to insert new MailRoom Service

Kernel processing
Extended Logging . . . . ________ +
Priority level . . . . . ________ +
Kernel Exit  . . . . . . KBAGXQP_ +
Exit parameters. . . . . ____________________________________________

MQSI V1 Exit parameters
MQ Manager . . . . . . . ____________________________________________ +
MQ Queue . . . . . . . . MY.MQSI.INPUT.QUEUE_____________________________
MQ Reply Queue . . . . . MY.REPLY.QUEUE_________________________________
Max wait for reply . . . 45________
MQSI Appl. Group . . . . IMBTESTAP_______
MQSI Message Type. . . . IMBTESTDOC1_____
MQSI Reload Rule Set . . ___ +
Transport delimitors . . :;
Ignore delim. in data. . YES +

Command  ===>
F1=Help      F3=Exit      F4=Prompt    F8=Forward   F12=Cancel
```

Figure 52. Setting up the MQSI exit parameters

You should consider specifying the following values. You can get help for each field by pressing F1.

MQ Manager
Name of the MQ manager, normally blank for the local one

MQ Queue Name of the MQSI input queue. MQSI should automatically read the document from this queue.

MQ Reply Queue
Name of the queue that BTB should get the reply from. MQSI must be defined to put the reply to this queue. No triggering should be defined, this queue must not trigger the normal MQ source scenario.

Max wait for reply

The maximum time in seconds that the exit will wait for a reply from MQSI. If this amount of time has passed and the remapped reply has not arrived, the exit will assume that remapping failed and the MailRoom request will also be failed. In this case error determination must be performed in the MQSI environment.

MQSI Application Group

Name of the MQSI Application Group for this message.

MQSI Message Type

Name of the MQSI Message Type for this message.

MQSI Reload Rule Set

Should the exit ask MQSI to reload the ruleset. This setting will not reload the format.

Transport delimitors

Two characters used by the exit to build the buffer sent to MQSI and to decode the reply. First character (default **:**) will be placed between records in the sent buffer and is expected in the reply between records. Second character (default **;**) will be placed at the end of the buffer being sent, it is not expected in the reply.

Ignore delimitors in data

What should the exit do if the defined delimitors also occur in the input document. The exit can either ignore them (blank out) or fail the document.

Super exit KBAGXSP

Kernel or destination exit used to call a number of exits in sequence. The example shown here uses the kernel exit. Use the Insert New MailRoom Service panel to set up the Super exit parameters. Figure 53 on page 159 shows the relevant section of the panel.

When using the Super exit up to five other exits can be specified. All exits have their own exit parameters. The exits can each return up to five event messages, but only the last five events returned to the super exit will be stored in MailRoom.

```
KBEICM1I                Insert new MailRoom Service                      IMB

Press Enter to insert new MailRoom Service

Kernel processing
Extended Logging . . . . ________ +
Priority level . . . . . ________ +
Kernel Exit  . . . . . . KBAGXSP_ +
Exit parameters. . . . . ____________________________________________

Super Exit parameters
Kernel Exit  . . . . . . ________ +
Exit parameters. . . . . ____________________________________________
Kernel Exit  . . . . . . ________ +
Exit parameters. . . . . ____________________________________________
Kernel Exit  . . . . . . ________ +
Exit parameters. . . . . ____________________________________________
Kernel Exit  . . . . . . ________ +
Exit parameters. . . . . ____________________________________________

Command  ===>
F1=Help      F3=Exit      F4=Prompt    F8=Forward   F12=Cancel
```

Figure 53. Setting up the Super exit parameters

XML Parsing to flat file exit KBAGXXP

Kernel or destination exit used to convert XML documents to a simple flat record oriented file. The exit is also defined as a display exit, where it will write semilar information to the panel in a more compact format.

The exit parses the XML document and write a D-record for every XML element (both beginning and end), XML attribute as well as character data. There is one record written for every event generated by the XML parser.

The following records/events are written:

Event	Record Type	Record layout
Start of Document	DOCSTART	0
PI Element	PIELEM	1
PI Attribute	PIATTR	3
Start of Element	ELEMSTART	1
Atribute	ATTRDATA	3
Characters	DATA	2
End of Element	ELEMEND	1
End of Document	DOCEND	0

	D	Record Typ	Elem	Attr/Info	Length	Buffer	Path
0	D	Rec Ch(16)	reserved				
1	D	Rec Ch(16)	Elem Ch(20)	Info Ch(4)	reserved		Path Ch(200)
2	D	Rec Ch(16)	Elem Ch(20)	reserved	L Ch(5)	Buffer Ch(200)	Path Ch(200)
3	D	Rec Ch(16)	Elem Ch(20)	Attr Ch(20)	L Ch(5)	Buffer Ch(200)	Path Ch(200)

Description of fields:

Record Id Character(1) Always D

Record Type Character(16) Type of this record/event, record layout is dependent of this value.

Element name Character(20) Name of current XML element

Info Character(4) Contains value ROOT if current element is the root element

Attribute Character(20) Name of attribute for current XML element

Length Character(5) NNNNb 4 numbers (and a blank) to indicate length of data in buffer

Buffer Character(200) Variable length buffer containing element data or attribute value. Longer values gets truncated.

Path Character(200) The full path to current XML element showing the nesting levels.

Mercator exit KBAMRCP

Kernel or destination exit used to reformat data. The example shown here uses the kernel exit. Use the Insert New MailRoom Service panel to set up the Mercator exit parameters. Figure 54 shows the relevant section of the panel.

```
KBEICM1I                Insert new MailRoom Service                      IMB

Press Enter to insert new MailRoom Service

Kernel processing
Extended Logging . . . . ________ +
Priority level . . . . . ________ +
Kernel Exit  . . . . . . KBAMRCP_ +
Exit parameters. . . . : ________________________________________

Mercator parameters
Mapname  . . . . . . . . : _______
Exit variant . . . . . : VAR1___+
Input-Output ratio . . : _______+
Paging size  . . . . . : _______+
Perform validation . . : ____+
Expect status file . . : _+
Workfiles in storage . . Y +
Prof./Fixed lgth(I). . : _+
Prof./Fixed lgth(O). . : _+
Mapping parameter1 . . : ________________________________________
Debugging Envelopeid . : _______
Add. Command options . : ________________________________________

Command  ===>
F1=Help      F3=Exit      F4=Prompt    F8=Forward   F12=Cancel
```

Figure 54. Setting up the Mercator exit parameters

You should consider specifying the following values. You can get help for each field by pressing F1.

Extended Logging

The VERBOSE option inserts the Mercator Execution Log as event text in the MailRoom.

Exit variant The Exit variant defines how the Exit will set up the call to Mercator and how input files and output files will be processed. Four variants are defined:

Exit variant	Description
VAR1	I1:Input O1:Mapped doc.
VAR2	I1:Input O1:Mapped doc. O2:New document
VAR3	I1:Input O1:Mapped doc. O2:Error
VAR4	I1:Input O1:Mapped doc. O2:New doc. O3:Error

All variants have the MailRoom document as primary input and the mapped document as output. There can be two additional types of output defined and created by the Mercator map, *Error* and *New Document*.

Requesting the Mercator Exit to *expect status file* or using the *mapping parameter* will add an additional output card or input card.

The map variants must be set up in Mercator correspondingly.

Input-Output ratio
Used by the exit to calculate the expected size of the output. If the output is calculated to be larger than 32K records, the exit must use a VSAM data set for output.

Paging size
This parameter relates to performance.

Perform validation
Validation is performed on input data only. Validation of input data can be set on or off using this field.

Expect status file
Is a way for the Mercator exit to pass return codes and messages to the exit and to the MailRoom. The Status output card must be the last card. The Status file must consist of only two records:

1st record CHAR(3)
Mercator map return code.

2nd record CHAR(VAR)
Return message.

If the return code is not **000** the mapping is considered *FAIL*ed in the MailRoom. The return message is always shown as an event in the MailRoom.

Workfiles in storage
Is a way to ask Mercator to keep all workfiles in storage. The default is for work files to not be kept in storage. For small documents, keeping work files in storage will improve performance.

Prof./Fixed lgth(I)
This field is used to control how Mercator handles variable-length records on input. There are two possible values:

- P
- W

The value P causes the exit to add the extension ':P' to the input card. P is the default if the field is not filled. This extension means that the data will be 'profiled', ie a table will be built in memory which cross-references record identifiers to corresponding file offsets.

The value W indicates that the extension ':W' will be used, and Mercator will then copy the input to a fixed format workspace before mapping it. This may give better performance in some cases.

Prof./Fixed lgth(O)

This field is used to control how Mercator handles variable-length records on output. There are two possible values:

- P
- W

The value P causes the exit to add the extension ':P' to the output card. P is the default if the field is not filled. This extension means that the data will be 'profiled', ie a table will be built in memory which cross-references record identifiers to corresponding file offsets.

The value W indicates that the extension ':W' will be used, and Mercator will then map the data to a fixed format workspace. After mapping completes, variable length records are separated out and written to the TS queue. This may give better performance in some cases.

Mapping parameter1

This is a way to pass user-determined values to the Mercator map.

If this field is not blank, this field and all the attributes on the MailRoom service are passed to the map as a TS Queue on a second input card. The record layout of the TS Queue passed in the second input card is:

Name CHAR(16)
Contains field name of MailRoom Service.

Value CHAR(VAR)
Contains value of field.

This field can be filled for two reasons:

1. In order to make available to the Mercator map, all the attributes on the service and their values in the format described above. In this case the field can contain any non-blank character.
2. In order to pass a certain string or value to the Mercator map. In this case the map should read the service attribute called 'Mapping Parameter1' and process the contents. All the other service attributes will also be passed even if they are not required.

The map can then be set up to read, from the second input card, any value on the service, and/or the string entered by the user.

Debugging EnvelopeID

For Mercator debugging (execution, audit log, input trace, and output trace), you must restart the Envelope with the EnvelopeID in this field. The debugging output will be generated and sent to the Electronic Addresses defined as the MailRoom Service Point of Contact.

Add. Command options

This field allows the experienced Mercator user to enter a string which will be added to the Mercator call. The content of this field is a the user's risk and must be in the correct format including punctuation and spaces in order for Mercator to use it. In other words, no checking is performed on the string, but if filled it is appended to the Mercator call built up by the exit.

Usage notes

- All input and output records must be defined in the Mercator Type trees with terminator LF/CR='0D 0A' Hex. Input and output records must be set to Hex in both *View as* and *Keep*.
- Error output will be typically be generated by the Mercator *RELEASE* setting and the *REJECT* function. Error output is supported in Mercator Exit variant *VAR3* and *VAR4*. If the Error output is *none empty*, the output will be sent to the Electronic Addresses defined as the MailRoom Service Point of Contact.
- A new document can be created by the Mercator map (not the mapped data) and will be processed by BTB in Mercator Exit variant *VAR2* and *VAR4*.

  Such a new document will be inserted into the MailRoom and sent to the destination defined in the leading M-record. The document must always start with an M-record and all following records must contain a *D* in the first position.
- Mercator MVS/CICS Version 1.4.2 or higher is needed for support of input larger than 32K records as well as for support of workfiles in storage.

  Refer to the *Installation Guide* for information about which version of Mercator to use.

Destination exit for OTMA support KBGXOTP

Destination exit used to send document to IMS using MQSeries and OTMA. The exit can only be used when destination is MQSeries.

The exit is used to build the MQIIH and IMS data header as the first part of the message data. The exit is using control information from the Dest Accounting Info field. This field must contain information about the IMS transaction, IMS user ID and RACF password.

Specification of control information in the Dest Accounting field is shown in Figure 55. The information is specified as part of the receive subscription.

```
Dest Accounting Info . : ttttttttuuuuuuuupppppppp
                         where tttttttt is IMS transaction
                               uuuuuuuu is IMS user ID
                               pppppppp is RACF password
```

Figure 55. MailRoom control information for OTMA exit.

Sample Display exit KBGXIDP

Exit used from MailRoom Document Versions panel to reformat contents of the document before display.

The exit will reformat some records in document such as the M-record (simple and extended), the SAP EDI_DC record and a number of DI records. For each of these records the exit will display the fields in the record one by one.

Record length Display exit KBGXIRP

Exit used from MailRoom Document Versions panel to show record length and total length of the document.

The exit will show the length of every record in the document and a total length of the whole document at the end.

Chapter 10. MailRoom On-line Monitoring

Monitors the processing of envelopes and requests from the *MailRoom Envelope Status* online dialogs. Log on the Business Transaction Broker and use the fastpath command **ADM** to get the panel shown in Figure 56. This is the Administration panel for Business Transaction Broker tables.

```
ADM                                Administration

Type choice or fastpath, then press Enter.

   Administration of IMB tables
_  1. CADM   Central Administration
   2. LADM   Local Administration (menu)
   3. SADM   IMB System Administration (menu)
   4. OPER   IMB Operation
   5. ENVST  MailRoom Envelope Status
   6. DEVLOP IMB Test Applications for Development
   7. DEVLO2 IMB Test Applications for Development (2)
   8. REQST  MailRoom Request Status
   9. XMITQ  MailRoom Transmission Queue
   A. GROUP  MailRoom Group Command
   C. CRLIST MailRoom Continuous Receives
   H. HELPHD Temporary change of Trading Partner



Command  ===>
F1=Help      F3=Exit      F12=Cancel
```

Figure 56. BTB Administration

You can enter a fastpath command on the command line or type the choice you require in the input field next to Option 1.

Envelopes

This is how you access MailRoom on-line monitoring:

Source envelopes Type fastpath **ENVST** or select Option 5 form the Administration panel shown in Figure 56. and you get a list of Source envelopes.

Destination envelopes

Press F6 Bottom

Press F9 from the *Source Envelope Status* list panel.

Derived envelopes Expand a source or destination envelope by typing an **X** next to it on the panel shown in Figure 57 on page 166.

© Copyright IBM Corp. 1992, 2002

List panel for Source and Destination envelopes

```
KBAMXMCL              MailRoom Source Envelope Status              BTB

Type one or more action codes, then press Enter.
Action codes: C=Cancel  E=Events  Q=reQuest  S=Select  X=eXpand

   ___ _______________ _________ ____________ SAP___________ _________
A  Cty Arrival time     From TP   Envelope Id  Layout          Status    Req.
_  678 2000-03-01-12.14 000995999 WPKQM5B01    SAP810          FAIL         2
_  678 2000-03-01-13.52 000995999 8R9JO5B01    SAP810          FAIL-P       4
_  678 2000-03-01-14.10 000995999 BCNIB5B01    SAP810          FINISH       1
_  678 2000-03-01-14.10 000995999 AGPFM5B01    SAP810          FINISH       1
_  678 2000-03-01-14.49 000995999 2CUYO5B01    SAP810          FINISH       1
_  678 2000-03-01-14.50 000995999 BCRM25B01    SAP810          FINISH       1
_  678 2000-03-02-11.12 000995999 FAWPD5B02    SAP810          FINISH       1
_  678 2000-03-02-14.12 000995999 SHP045B02    SAP810          FINISH       4
_  678 2000-03-02-14.22 000995999 28YP35B02    SAP810          FINISH      11
_  678 2000-03-03-12.53 000995999 G7VV45B03    SAP810          FINISH       2



Command  ===>
F1=Help      F3=Exit      F5=Refresh   F6=Bottom    F8=Forward   F9=DestEnv
F12=Cancel
```

Figure 57. MailRoom Source Envelope Status panel

Figure 57 shows a list of source and destination envelopes. The status of the requests in the envelopes is also shown. Press F6 to toggle between source and destination envelopes.

Action codes

C Cancel all requests in a envelope.

S Select all details of an envelope.

X Expand a current source or destination envelope to list all derived envelopes in it.

For Source it is the envelopes that derived from the source, for Destination it is the derived envelopes that provided *requests* to the Destination envelope.

E Lists all events for a envelope. An event could be a DataInterchange audit file or the I-records returned when enveloping and sending data to DataInterchange.

Q List all requests in the envelope.

Here is a description of the fields:

Cty Country Code from the M-record. If the source scenario could not find a Country code, the value *???* is assigned.

Arrival time YYYY-MM-DD-HH.MM. The date and time where the envelope arrived at the MailRoom.

From TP From Trading Partner number from the M-record. If the source scenario could not find a Trading Partner number, the value *?????????* is assigned.

Envelope Id Envelope Identification assigned by the MailRoom.

Layout Layout of Envelope. If different layouts are found in the envelope, the layout displayed will be *<mixed>*. If no layout is provided in the M-records, the value *????????????????* is assigned.

Status Status of envelope. All status codes are discussed later in this chapter.

Req. Number of requests/documents in the envelope.

List panel for Derived envelopes

```
KBAMCMCL              MailRoom Expanded Source Envelope              BTB

Type one or more action codes, then press Enter.
Action codes: S=Select  Q=Request  R=Restart   E=Events

Country code . . . : 123                      From Trading Partner: 000800000


           _________ ____________ _________________
A  Type Status    Envelope Id  Layout           To TP      Updated
_  SRC  FAIL-P    L9RNU5C08    <MIXED>                     08-09.34.15
_   DER FINISH    L9RNU5C08000 SAP810           000995999  08-09.33.32
_   DER FAIL      L9RNU5C08001 SAP810TEST       000995999  08-09.34.15
_









Command  ===>
F1=Help      F3=Exit      F5=Refresh   F12=Cancel
```

Figure 58. MailRoom Expanded Source Envelope panel

Action codes

S Show all details of an envelope.

E Display all events for a envelope.

Q List all requests in the envelope.

R Restart of the source or derived envelope. Restart of source or derived envelopes and requests are discussed further on in this chapter.

Here is a description of the fields:

Type Type of envelope.

SRC Source envelope
DER Derived envelope
DST Destination envelope

Status Status of envelope. All status codes are discussed later in this chapter.

Envelope Id Envelope Identification assigned by the MailRoom.

Layout Layout of Envelope. If different layouts are found in the envelope, the layout displayed will be *<MIXED>*. If no layout is provided in the M-records, the value *????????????????* is assigned.

To TP Trading Partner number for the TP that should receive the document. If Extended Routing apply for the service the To TP on the source envelope will display *<FANNED>*.

Updated When envelope was last updated. DD-HH.MM.SS

Detail Panel for all types of envelopes

The Details of Envelope panel is a *dynamic* panel. The contents of the panel is change depending on scenario. Here is a description of the fields:

Country code Country Code from the M-record. If the source scenario could not find a Country code, the value *???* is assigned.

From TP From Trading Partner number from the M-record. If the source scenario could not find a Trading Partner number, the value *?????????* is assigned.

To TP Trading Partner number for the TP that should receive the document. If Extended Routing apply for the service the To TP on the source envelope will display *<FANNED>*.

Status on Envelope
Status of envelope. All status codes are discussed later in this chapter.

Total documents in Env
Total numbers of documents in this envelope.

Security check ok/not ok
How many of the documents had a valid service/subscription, and how manu had not.

Preprocess ok/not ok
How many of the documents that were preprocessed successfully, and how many were not.

Sent ok/not ok
How many of the documents that were sent successfully, and how many were not.

Acknowledge ok
How many of the documents that were acknowledged successfully, and how many were not.

Envelope Id The envelope ID.

Envelope Type
One of these types:

SRC Source
DER Derived
DST Destination

Source Type Source scenario type, for example BATCH or DI-EDI.

Creation time DB2 Time-stamp when envelope was created.

Last update DB2 Time-stamp when envelope was last updated

Service MailRoom service.

Application Id Application id from the MailRoom service.

```
KBAMNM1S                    Details of Envelope                    BTB

(no action on Enter)

Trading Partner info
Country Code . . . . . : HLS
To . . . . . : <FANNED>  - TP IS UNKNOWN                    1
From . . . . . : TP1       - Henriks TP 1

Status info
Status on Envelope . . : FINISH
Total documents in Env :          2

Processing overview              OK     NOT OK
Security checked . . . :          2
Preprocessed . . . . . :          2
Sent . . . . . :          2
Acknowledged . . . . . :          2

Identification info
Envelope ID. . . . . : 5ZX727602
Envelope Type. . . . . : SRC                                    1
Source Type. . . . . : PGM
Creation time. . . . . : 2000-03-02-14.20.26.039821
Last update. . . . . : 2000-03-02-14.29.47.927429

Service info
Service. . . . . :
Application Id . . . . :
Layout . . . . . : HLSXROUT

Originator information
Net name . . . . . : FK0SJP15
CICS terminal ID . . . : JP15
CICS userid. . . . . : ISHLS

Command  ===>
F1=Help      F3=Exit      F8=Forward   F12=Cancel
```

Figure 59. Details of Envelope panel

Layout MailRoom layout from the MailRoom record.

Layout of document. If no layout is provided in the M-record, the value *????????????????* is assigned.

Originator Information

Different originator information displayed dynamically depending on Source type. For example, for source type *PGM* the originator information is Netname, CICS terminal ID and CICS user ID.

Requests

How accessed

- From one of the list panels of envelopes type **Q** to get all requests belonging to an envelope.

List panel for requests

```
KBAMRMCL              MailRoom Requests in an Envelope             BTB

Type one or more action codes, then press Enter.
Action codes: S=Select    E=Event     D=Document   V=Versions   P=DI-rePort
              A=sysAck    F=Fail      M=Mail       R=Resend     I=DI-Image

Country code . . . : 123                    From Trading Partner: 000995999


A  _____ _________
A  SeqNo Status     To Tp     Layout           Envelope ID  Last update
_  00001 FINISH     000995999 SAP810           T3LZR7602000 02-14.29.46
_  00002 FINISH     000995999 SAP810           T3LZR7602001 02-14.27.56









Command  ===>
F1=Help      F3=Exit      F5=Refresh   F6=Toggle    F12=Cancel
```

Figure 60. MailRoom Requests in an Envelope panel

Panel displays all requests belonging to the selected envelope.

Action codes

S Select details of a request.

E Display all events for a request.

D Display the original document associated with the request as it is stored in the Transport Tables.

V Display list of all versions of the document.

P A DataInterchange transaction detail report is generated and displayed.

A Send a System Acknowledgment as defined on the Service. A System Acknowledgment can either be send to a PGM-CICS Destination or to a TIE-IMS Destination. On the Service all the details about the destination is defined.

M Mail a document to a person. It can be mailed to any node type defined in the BTB, but the exact node and user ID does not have to be defined in the BTB.

F Force the request into a *FAILED* status.

R Resend can only be done for a request that already has completed all processing down to the sending point. Resend is only available for certain destination types (not MDI scenarios where document are sent as a group).

I A DataInterchange transaction image report is generated and displayed.

Here is a description of the fields:

Country code Country Code from the M-record. If the source scenario could not find a Country code, the value *???* is assigned.

From Trading Partner
From Trading Partner number from the M-record. If the source scenario could not find a Trading Partner number, the value *?????????* is assigned.

Seqno. Sequence number is a consecutive number based on the number of documents in the source envelope.

Status Status of the request. All status codes are discussed later in this chapter.

To TP Trading Partner number for the TP that should receive the document.

Layout Layout of the request. If no layout is provided in the M-record, the value *??????????????* is assigned.

Envelope Id The Derived envelope ID assigned by the security layer.

Last update Format: DD-HH.MM.SS. Day and time when request was last updated.

Detail Panel

```
KBAMZM1S                      Details of Request                      BTB

(no action on Enter)

Trading Partner info
Country Code . . . . . : HLS
To . . . . . : TP2       - Henriks TP 2
From . . . . . : TP1       - Henriks TP 1

Status info
Status on Request. . . : FINISH
Sec. Status. . . . . : 1 OK
Prep. Status . . . . . : 1 OK
Sent Status. . . . . : 1 OK
Ack. Status. . . . . : 1 OK
Wanted Ack.level . . . : 2
Actual Ack.level . . . : 2

Identification info
Envelope ID. . . . . : 5ZX727602000
Document sequence no.. : 0000000001
Layout . . . . . : HLSXROUT
Creation time. . . . . : 2000-03-02-14.20.31.890616
Last update. . . . . : 2000-03-02-14.29.46.990000

Reference data
Ref. data1 . . . . . : NR: 01
Ref. data2 . . . . . : THIS IS REF_DATA2

Source info
Info1. . . . . :
Info2. . . . . :
Info3. . . . . :
Info4. . . . . :

Destination info
Info1. . . . . :
Info2. . . . . :
Info3. . . . . :
Info4. . . . . :

Additional info
Sysack ctl info. . . . :
Int. proccessing info. :

Command  ===>
F1=Help      F3=Exit      F8=Forward   F12=Cancel
```

Figure 61. Details of Request panel

This panel is the first panel that display the details of the selected request. The panel is scrollable. Here is a description of the fields:

Country code Country Code that both the receiving and sending Trading Partner belong to. If the source scenario could not find a Country code (in the M-record), the value *???* is assigned.

From Trading Partner
From Trading Partner number from the M-record. If the source scenario could not find a Trading Partner number, the value *?????????* is assigned.

To TP Trading Partner number for the TP that should receive the document.

Status on request
The current status of the request. All status codes are discussed later in this chapter.

Sec. status A switch showing if and how the request passed a service subscription check.

Blank The step has not been performed yet.
0 The request failed in step.
1 The request passed this step.
S This step has been skipped.

Prep. status A switch showing if and how the request passed a preprocess routine, for example, DataInterchange translation.

Blank The step has not been performed yet.
0 The request failed in step.
1 The request passed this step.
S This step has been skipped.

Sent status A switch showing if and how the request was sent correctly.

Blank The step has not been performed yet.
0 The request failed in step.
1 The request passed this step.
S This step has been skipped.

Ack. status Switch showing if and how the request has been acknowledged. If this step is performed, depends on the acknowledgment level specified on the service.

Blank The step has not been performed yet.
0 The request failed in step.
1 The request passed this step.
S This step has been skipped.

Wanted Ack.level
Acknowledgment level as specified on Service.

Actual Ack.level
Actual Acknowledgment level.

Envelope Id The unique Identification number of an derived Envelope.

Doc. sec. no Document sequence number. A consecutive number assigned for all documents in the source envelope. Envelope number + Document sequence no gives the unique Identification of the Request.

Layout Layout of derived envelope.

Creation date DB2 Time-stamp when request was created.

Last update DB2 Time-stamp when request was last updated.

Ref. data Reference data from the M-record.

Source info1-4
Source scenario specific information. Mainly for internal use.

Destination info1-4
Destination scenario specific information. Mainly for internal use.

Additional info

Contains information about System Acknowledgment control and Internal processing control. Mainly for internal use.

MailRoom List of Event

```
KBAMEMCL                  MailRoom List of Events                      .

Type one or more action codes, then press Enter.
Action codes: T=Text  H=Help  J=Jump to Envelope  ?=Entire Message text

Country code . . . : 123             Layout . . . . . . . : SAP810
To Tp. . . . . . . : 000800000       Envelope Id  . . . : T3LZR7602000
From Tp. . . . . . : 000995999       Message Language . . UK


A  _________ _________
   Status    Message ID Message text                              Last Update
_  PROC      KBAKEA012  This envelope was created by KVR8J1108   02-14.20.34
_  PROC      KBAFDA007  DataInterchange Translation Audit        02-14.20.35
_  PROC      KBAFDA011  Trace file obtained                      02-14.20.36
_  PROC      KBAFDA008  Preprocess OK                            02-14.20.36
_  FINISH    KBADDA017  Send to ExpEDIte OK                      02-14.20.39




Command  ===>
F1=Help      F3=Exit      F4=Close     F5=Refresh   F6=Bottom    F8=Forward
F12=Cancel
```

Figure 62. Details of MailRoom List of Events

Panels shows all events beloning to the selected request.

Action codes

T Show the additional text. When the text in yellow, this action will display additional text for an event.

J Jump to Envelope. When message text is turquoise, this action will display the primary Envelope Status panel with the listed envelope key. This feature is used when one envelope or request is related to another envelope.

H Displays message text for the selected message ID.

? Full text. Show the event text in full length in the message field.

Here is a description of the fields:

Envelope Id The unique Identification number of an derived Envelope.

Country code Country Code that both the receiving and sending Trading Partner belong to. If the source scenario could not find a Country code (in the M-record), the value *???* is assigned.

From Trading Partner

From Trading Partner number from the M-record. If the source scenario could not find a Trading Partner number, the value *?????????* is assigned.

To TP Trading Partner number for the TP that should receive the document.

Layout Layout of derived envelope.

Envelope Id The unique Identification number of an derived Envelope.

Message Language
The language in which the messages should be written. The field can be entered.

MailRoom Additional text on Event

```
KBAMTMCL              MailRoom Additional text on Event                  IMB


_____________________________________________________________________________
Additional text
1Audit Trail Report  -DataInterchange Utility-  Date: 2001 01 22 Time:
       14:46:36 Page: 00001

 FF0180 Processing Transactions from application file: KBAF0049 type: TS.
 FF0168 The Default Batch ID, 22144636, has been assigned for the
        following transactions.
 FF0010 Transaction number 1 to 1 translated successfully.









Command  ===>
F1=Help      F3=Exit      F4=Mail      F11=Right    F12=Cancel
```

Figure 63. Details of MailRoom Additional text on Event

Panels shows additional text belonging to selected event. Here is a description of the field:

Additional text
Shows all the text of an event. Above the line indicated with Additional text You may enter a search string, to find specific strings You are looking for.

Documents contents

```
KBAMHMCL                      Documents contents                          IMB

_____________________________________________________ Line. ____1 Col. ___1
         10        20        30        40        50        60        70
12345678901234567890123456789012345678901234567890123456789012345678901234567
MEXTREC00123000800000                          000995999
DXITBGM          351                                      AAGG73
DXITDTM          13720001121                        102
DXITMEA          CT SQ
DXITMEA          WT AAD
DXITRFF          ON
DXITRFF          VN NO9RT8
DXITRFF          IL NO9RT8
DXITNAD          SF ILC                                 91 IBM       AND N.
DXITNAD          DP 62491111                            91 ON BEHALF OF IBM
DXITCTA          IC
DXITTOD          5     8
DXITTOD          6     CFR
DXITTOD          6     BEL

Command  ===>
F1=Help      F3=Exit      F8=Forward   F11=Right    F12=Cancel
```

Figure 64. Details of Document contents

Panels shows the document contents. Here is a description of the fields:

Document contents
: You may enter a search string, to find specific strings You are looking for.

Line
: The number for the first line in the panel. You may enter a new value and it will jump to this line.

Col.
: The number of the first columen. You may enter a new value and it will jump to this column.

MailRoom Document Versions

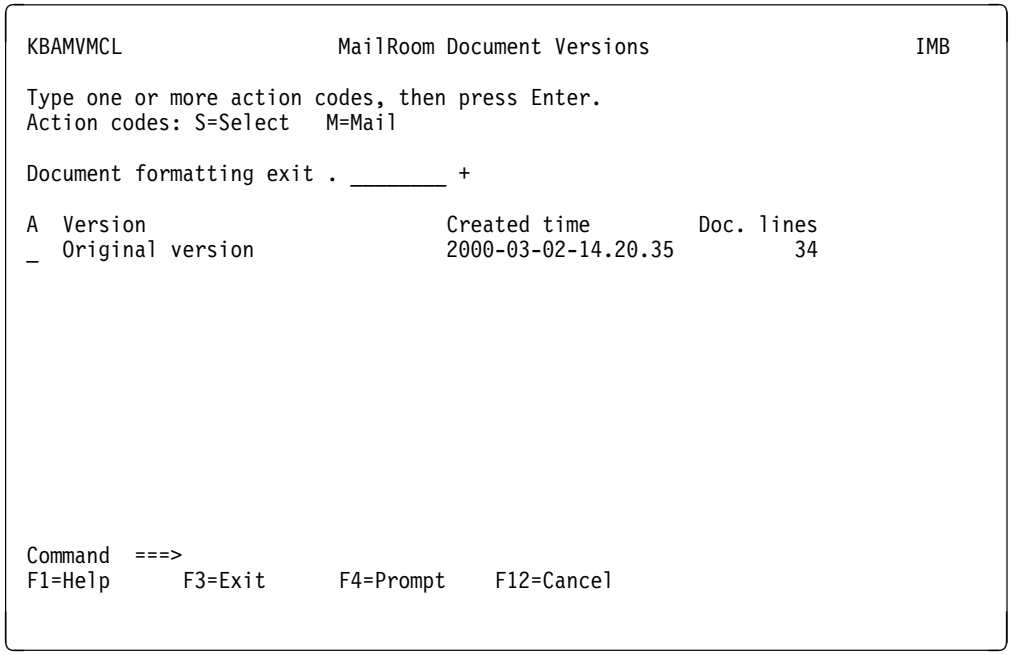

Figure 65. Details of MailRoom Document Versions

If a document has been changed by an exit, there will be more than one version of the document in MailRoom. This panel shows all versions of a document. Here is a description of the field:

Document format exits.
If you press F4 for Prompt when the cursor is in this field, you will get a list for differents exit. When you select an exit, the document will be shown after it had been handle by the exit.

Action codes

S Select will dusplay the selected document. This acion can be used together with the document formatting exit.

M Mail will guide you to the Send file panel, where you can enter the mail adress where to the document should be send.

Transactions Details

```
KBAMDMCL                    Transaction Details                          IMB

 Application control number . . . . . :
 Interchange control number . . . . . : 00000000000163
 Group control number . . . . . . . . : 00000000000163
 Transaction control number . . . . . : 00000000000228
 Transaction status . . . . . . . . . : SENT TO NETWORK
 Added to store . . . . . . . . . . . : 2000 03 02-14:52:01
 Store status . . . . . . . . . . . . : ACTIVE
 Delivered to application . . . . . . :
 Translation error level  . . . . . . : 0
 Translation  . . . . . . . . . . . . : ACCEPTABLE
 Network acknowledgment requested . . . : F
 Network status . . . . . . . . . . . : SENT TO NETWORK
 Functional acknowledgment  . . . . . : NOT REQUESTED
 Functional ack date  . . . . . . . . :
 Application ID . . . . . . . . . . . : EDIFFS
 Batch ID . . . . . . . . . . . . . . : 22145201
 Earliest purge date  . . . . . . . . : 2000 05 02

Command  ===>
F1=Help      F3=Exit      F4=Mail      F8=Forward   F12=Cancel
```

Figure 66. Details of DataInterchange Transactions Details

If a document has been preprocessed by DataInterchange there will be a DataInterchange Detail Report. This panel shows the original DataInterchange Details report. For description of the fields look in DataInterchange documentation.

Transactions Image

```
KBAMDMCL                      Transaction Image                          IMB


 Trading partner nickname:  NOORTMAN
 Transaction handle  . . :  20010122121025200000
 Transaction status  . . :  SENT TO NETWORK

 BGM+351+AAGG73'
 DTM+137:20001121:102'
 MEA+CT+SQ+NMP:000000000000000001'
 MEA+WT+AAD+KGM:000000000000111.00'
 RFF+ON'
 RFF+VN:NO9RT8'
 RFF+IL:NO9RT8'
 NAD+SF+ILC::91+IBM       AND N.V:C/O NEDLLOYD DISTR. WESTPOORT BV::
 ======== ******* ========:           - I L C -'
 NAD+DP+62491111::91+ON BEHALF OF IBM BELGIUM S.A.:TO CUSTOMER
 ADDRESS A' PER:CUSTOMER ADDRESS LABEL:SCHARENBURG 1, 1046 BA
 AMSTERD:  FINAL DESTINATION'

Command  ===>
F1=Help      F3=Exit      F4=Mail      F8=Forward   F12=Cancel
```

Figure 67. Details of DataInterchange Transactions Image

If a document has been preprocessed by DataInterchange there will be a DataInterchange Image Report. This panel shows the original DataInterchange Image report. segmented segment by segment.

Transmission Queue

A document will be placed on the Transmission Queue if the sending to a remote destination is temporary impossible. Later a scanner will try to send the document.

How accessed

- From the command line type fastpast command **XMITQ** or select Option 9 from the Administration panel shown in Figure 56 on page 165. and you get a list of the Group Command panel.

List panel for Transmission Queue

```
KBAMYMCL                MailRoom Transmission Queue                BTB

Type one or more action codes, then press Enter.
Action codes: S=Select


A  Dest type Cty  To TP      Service   Count  Envelope Id   Sequence no
_  TIE-IMS   123  000800000  KBAPGTI       2  N1WRW9423000  0000000001
     First time.: 2000-04-23-15.05.20    Retry time.: 2000-04-23-15.43.51
     Problem....: SYSIDERR, link to IMS is down             Permanent
_  TIE-IMS   123  000800500  KBAPGTI       1  KF5DG9423000  0000000001
     First time.: 2000-04-23-15.07.43    Retry time.: 2000-04-23-15.43.51
     Problem....: SYSIDERR, link to IMS is down             Permanent









Command  ===>
F1=Help      F3=Exit      F5=Refresh   F12=Cancel
```

Figure 68. MailRoom Transmission Queue

The panel shows a list of entries in the MailRoom Transmission Queue. Each line will represent one or more waiting documents for the same physical destination.

Action codes

S Display envelope status for the selected row.

Here is a description of the fields:

Dest type Type of Destination.

Cty Country code.

To TP Trading Partner identification for receiver.

Service

Count Number of documents of same type waiting to be sent to the same Destination.

Envelope ID Envelope Identification.

Sequence no The document sequence number of first waiting document.

First time Date and time when first attempt to send was performed.

Retry time Date and time when latest attempt to send was performed.

Problem A short description of the problem.

Group Command

How accessed

- From the command line type fastpast command **GROUP** or select Option A from the Administration panel shown in Figure 56 on page 165. and you get a list of the Group Command panel.

Group command

```
KBAMSMCL                  MailRoom Search for Group

Enter Search criteria


Type of List . . . . . .  D +
Country code . . . . . .  123
Arrival time between . .  2001-01-01_____ and 2001-06-01_____
Status . . . . . . . . .  __________
From Tranding partner. .  _________
To Trading partner . . .  _________
Layout . . . . . . . . .  ________________
Amount of rows . . . . :  165









Command  ===>
F1=Help      F3=Exit      F4=Prompt    F5=See list  F6=Del.list  F12=Can
```

Figure 69. MailRoom Search for Group

In the panel it is possible to enter search criteria to get a list of source envelopes, derived envelopes or request. From the list panel it is then possible to make a MailRoom command for a group of entries. Here is a description of the fields:

Dest type Type of Destination.

Type of list Enter the kind of list you want to work with. This field is mandatory.

Country code Optional. Enter the whole country code or just a part of it.

Arrival time between
Optional. It is possilbe to enter a period of arrival time where the envelopes arrived in MailRoom

Status Optional. Enter the whole status code or just a part of it.

From TP Optional.Trading Partner identification for receiver. Enter the whole Trading Partner or just a part of it.

To TP Optional.Trading Partner identification for sender. Enter the whole Trading Partner or just a part of it.

Layout Optional. Layut of the services you want to work with. Enter the whole layout or just a part of it.

Amount of rows.
The field can not be entered. The field indicate how many rows there were in the last search you made.

MailRoom Group Command for Source/Derived envelope

There are 2 kind of list panel, where in you can make the group command - there is one for Source/Derived envelopes and one for request. In Figure 70. you find the list of Source/Derived envelope.

```
KBAMGMCL      MailRoom Group Command for Source/Derived envelope

Type action or group command, then press Enter.
Action codes: O=Omit  Q=reQuest  ?=Entire Message text
Type Group Command.  _ R=Restart
   ____________                                                  _____
A  Envelope Id  CTY Layout           Status  From TP   Arrivaltime      Pro
_  LRN4O6808000 123 KBAZVER-MAIL     RECOV   000800000 2001-02-08-15.57
_  59AGE6823002 123 PGM-TO-PGM-CICS  PENDING 000800000 2001-02-23-08.25
_  BGIRM6823002 123 PGM-TO-PGM-CICS  ACK     000800000 2001-02-23-13.15
_  H7AFR6826002 123 PGM-TO-PGM-CICS  PENDING 000800000 2001-03-02-08.07
_  IG2I66826002 123 PGM-TO-PGM-CICS  ACK     000800000 2001-03-26-08.09
_  ZZHDU6826002 123 PGM-TO-PGM-CICS  ACK     000800000 2001-03-26-08.09
_  U8RC86826002 123 PGM-TO-PGM-CICS  ACK     000800000 2001-03-26-08.09
_  FFO7O6826002 123 PGM-TO-PGM-CICS  ACK     000800000 2001-03-26-10.44
_  3QC9W9A04000 123 SYSACK           FAIL    009999999 2001-02-04-14.31
_  3QC9W9A04001 123 SYSACK           FAIL    000800000 2001-04-04-14.31
_  GIMM79C29000 123 MAIL-TO-DI       FAIL    000800001 2001-04-29-11.18
_  YZWGM0104000 123 MAIL-TO-DI       FAIL    000800002 2001-05-04-18.22

Command  ===>
F1=Help      F3=Exit      F8=Forward   F12=Cancel
```

Figure 70. MailRoom Group Command for Source/Derived envelope

In the panel you have the possiblility to make a search on the envelope id and the processed code and omit entries, which should not affected by the group command.

Action codes

O Omit the roew from the list. The group command will execute the group command for all entries in the list (the list without any search criteria). If a row should not be affected by the group command, the row should be active omitted from the list.

E See the event in MailRoom. This action is only possible from the MailRoom Group Command for Request panel.

Q See the request in MailRoom. This action is only possible from the MailRoom Group Command for Source/Derived envelope panel.

? See the Entire Message text

Group Command

A Make System Acknowledgement for all entries in the list. This group command is only possible from the MailRoom Group Command for Request panel panel.

F Fail all entries in the list. This group command is only possible from the MailRoom Group Command for Request panel panel.

I Finish all entries in the list. This group command is only possible from the MailRoom Group Command for Request panel panel.

R Restart/Resend all entries in the list. In the MailRoom Group Command for Request panel the command have the meaning of Resend. In the MailRoom Group Command for Source/Derived envelope panel the command have the meaning of Restart. Press F1 for online help for more information about meaning of Resend and Restart.

Here is a description of the fields:

Envelope Id	The MailRoom envelope id
CTY	The country code.
Layout	The Layout of the envelope.
Status	The status the envelope is in.
From TP	Trading Partner identification for receiver.
Arrival time.	The time the envelope arrived in the MailRoom
Pro	Progress of the group command. How far has it been processed.

Continuous Receives

Continuous Receives defined in DataInterchange and Expedite/CICS are shown on this panel. It is possible to see the actual status as well as start or stop the continuous receives related to DI. Continuous Receives are used when setting up automatic receiving from IBM Information Exchange.

How accessed

- From the command line type fastpast command **CRLIST** or select Option C from the Administration panel shown in Figure 56 on page 165. and you get a list of the Group Command panel.

List panel for Continuous Receives

```
KBAMKMAL                MailRoom Continuous Receives                    BTB

Type one or more action codes, then press Enter.
Action codes: S=Select  O=Stop  A=Start


A  Typ  Profile           MsgClass  Account   User-id   Man  CR Status
_  DI   CONTRCV           #EE       TESTACCT  TESTUSER  Yes  STARTED
_  DI   CRTESTING         #EE       TESTACCT  TESTUSER  No   NOT STARTED N/A
_  DI   SYSTEMTEST001     214       TESTACCT  TESTUSER  No   NOT STARTED
_  EXP  TESTACCT TESTUSER TESTFILE  TESTACCT  TESTUSER  Yes  EXP STARTESING
_  EXP                    INVOIC    TESTACCT  TESTUSER  No   EXP STARTESING









Command  ===>
F1=Help      F3=Exit      F5=Refresh   F6=Check CR  F9=Errorlog  F12=Cancel
```

Figure 71. MailRoom Continuous Receives

The panel shows a list of all Continuous Receives known to Expedite/CICS, DataInterchange and BTB.

Action codes

S Display details for a Continuous Receive.
O Stop a DI Continuous Receive
A Start a DI Continuous Receive

Function keys

F1, F3, F7, F8 and F12 have normal function key behavoir. The following function keys have a special meaning:

F5 Refresh, will refresh the list to display up to date status.
F6 Check CR, will verify if all Continuous Receive defined in the WC table as mandatory are actually active.
F9 Errorlog, will show BTB System Errorlog entries related to the current user and this program. This is usefull if a DI stop or start command have failed.

Fields on list

Here is a description of the fields:

Typ Type of Continuous Receive.

Profile Name of DI Continuous Receive Profile or key fields from Expedite/CICS.

MsgClass IE Message User Class selected by this Continuous Receive.

Account IE Account of receiver (mailbox documents are received into).

User-id IE User-id of receiver (mailbox documents are received into).

Man Mandatory indicator. Yes indicate a mandatory Continuous Receive defined in the WC table.

CR Status Status of the Continuous Receive as reported by DataInterchange.

Detail panel for Continuous Receives

```
KBAMLM1S            Details of MailRoom Continuous Receive               BTB

(no action on Enter)

CR Type. . . . . . . . : DI
Profile name . . . . . : CONTRCV
Message User Class . . : #EE
Sender IE Mailbox. . . :
Receiver IE Mailbox. . : TESTACCT TESTUSER
DI/CICS Unique Id. . . : C0000099
Expedite/CICS Unique Id: C0000000

Mandatory. . . . . . . : No
Status . . . . . . . . : STARTED

Description. . . . . :
This continuous receive is considered to be running by both DataInterchange
and Expedite/CICS, and a continuous receive profile member exists.


Command  ===>
F1=Help      F3=Exit      F12=Cancel
```

Figure 72. MailRoom Continuous Receives, detail panel

Fields in detail panel

Here is a description of the fields:

CR Type Type of Continuous Receive. DI for profiles defined in DataInterchange, EXP for profiles defined only in Expedite/CICS.

Profile name Name of DI Continuous Receive Profile or key fields from Expedite/CICS.

Message User Class
IE Message User Class selected by this Continuous Receive.

Sender IE Mailbox IE Account of sender selected by this Continuous Receive.

Receiver IE Mailbox
IE User-id of receiver (mailbox documents are received into).

DI/CICS Unique Id A unique Id assigned by DataInterchange.

Expedite/CICS Unique Id
A unique Id assigned by Expedite/CICS.

Mandatory Mandatory indicator. Yes indicate a mandatory Continuous Receive defined in the WC table.

Status Status of the Continuous Receive as reported by DataInterchange.

Description A descriptive text associated with the current status code. The text is taken from the DataInterchange documentation.

Defining Mandatory Continuous Receive

It is possible to check the current status to Continuous Receives against a number of predefined mandatory profiles. This is an easy way to check if all required profiles are active and working correctly.

The mandatory profiles must be defined in the working criteria (WC) table in the following format. See the *Installation Guide* for further information about entering data in the Wc table.

CONT-RECEIVE *nnn* One or more (*nnn*: 000 - 999) entries defining mandatory continuous receive profiles.

Cty Use 000 for a global entry

Value DI:*contrcv-profile name* e.g.
DI:CONTRCV
Define DataInterchange continuous receive profile CONTRCV as mandatory.

CONT-RECEIVE *nnn* One or more (*nnn*: 000 - 999) entries defining mandatory continuous receive profiles.

Cty Use 000 for a global entry

Value EX:*aaaaaaaauuuuuuuummmmmmmm* e.g.
EX:TESTACCTTESTUSERTESTFILE
Define Expedite/CICS profile receiving data from mailbox TESTACCT TESTUSER with message user class TESTFILE as mandatory.

Status codes in MailRoom

Layer setting the status code	Source envelope	Derived envelope	Destination envelope	Request	Description
Source layer	INIT INIT-B INIT-T				Received data is stored as documents in a source envelope. Only the source envelope is displayed at the MailRoom status online dialouge. **INIT**: The data was handled by any source scenario except BATCH or TIE-IMS. **INIT-B**: The data was handled by the BATCH source scenario. **INIT-T**: The data was handled by the TIE-IMS source scenario.
Kernel layer (Security)	PROC	SECCHK		PROC	The service/subscription is being checked and derived envelopes and requests created.
Kernel layer (Preprocess)	PROC	PREPROC		PROC	Preprocessing e.g DataInterchange translation or SAP conversion is performed.

Layer setting the status code	Source envelope	Derived envelope	Destination envelope	Request	Description
Kernel layer (Routing)	PROC	SCHDUL ROUTE FANNING EXIT		SCHDUL	**ROUTE**: A destination envelope is created and and the sending layer is triggered. **SCHDUL**: A schedule was specified on the service and the sending is delayed. **FANNING**: Extended Routing applies to the service, and the kernel creates a copy of the document/request for all the Trading Partners that are selected as receiver by the Extended Routing process. **EXIT**: The kernel has called the kernel exit specified on the service.
Destination layer	PROC	SEND XMITQ	PROC XMITQ	PROC XMITQ	**PROC**: The destination envelope is being sent. **XMITQ**: The envelope is waiting to be sent.
Destination layer (Acknowledge)	PROC	PENDING EXIT	PENDING	PENDING IN PROC PEND.OVD	**Request PENDING**: the document has been sent and the MailRoom is waiting for an acknowledgment. **Request IN PROC**: the document is being processed by the receiving Business application. **Request PEND.OVD**: No acknowledgment has been received, and the overdue period specified on the service has been exceeded.
All layers	FINISH FAILED FAIL-P LOCK CANCEL	FINISH FAILED FAIL-P LOCK CANCEL	FINISH FAILED FAIL-P CANCEL	FINISH FAILED LOCK CANCEL	**Envelope FINISH**: all related requests are in status FINISH. **Envelope FAILED**: all related requests are in status FAILED. **Envelope FAIL-P**: Some related requests are in status FINISH and some in status FAILED. **Envelope LOCK**: A kernel exit has requsted that all requsts in the envelope are locked, so no documents are routed to the destination scenario. **Envelope CANCEL**: Envelope has manually been cancelled from the envelope status screen or has been cancelled during restart of the source envelope.

Restart envelopes and documents

The restart facility is used by the administrator whenever there is a need to restart documents for a destination. The restart is performed from the on-line MailRoom dialogue. The following describes the restart facility in MailRoom and the possibilities of the restart.

Restart considerations

The restart in MailRoom is used whenever the administrator wants something to be reprocessed starting from the MailRoom continuing further on to the actual destination. The restart is performed from the on-line MailRoom dialogue, which will trigger the restart transaction.

The restart transaction makes some global check to find out if it is possible to restart the envelope and if the envelope/request has a valid status. The restart is only dependent on the Destination Scenario type, and is not dependent on the Source Scenario type or the fact that it is a mixed Source Envelope.

Restart types

There are three types of restarts.

- Restart of source envelopes
- Restart of derived envelopes
- Resend of single requests within a derived envelope

The division is made because there are different types of destination scenarios in the MailRoom. Some are Multiple Document Interchange (MDI) scenarios and others are Single Document Interchange (SDI) scenarios. It also depends on the level where the processing in MailRoom can be done from.

Restart types in various destination scenarios

Destination scenario	Type	Restart source envelope	Restart derived envelope	Resend single request	Comments
APPC	SDI	Yes	Yes	Yes	
BATCH	MDI	Yes	Yes	No	After restart, the documents are marked ready to be retrieved from the Transport Tables using the BATCH read utility.
DI-EDI	MDI	Yes	Yes	No	The documents are re-translated by DataInterchange before sending.
EXP-DOC	MDI	Yes	Yes	No	
EXP-FILE	SDI	Yes	Yes	Yes	
FAX	SDI	Yes	Yes	Yes	
MAIL	SDI	Yes	Yes	Yes	
MQ	SDI	Yes	Yes	Yes	
NULL	SDI	Yes	Yes	Yes	Only updates status information
PGM-CICS	SDI	Yes	Yes	Yes	
SAP	SDI	Yes	Yes	Yes	
SAP-MQ	SDI	Yes	Yes	Yes	
TCP-IP	SDI	Yes	Yes	Yes	
TIE-IMS	SDI	Yes	Yes	Yes	
TIE-MQ	SDI	Yes	Yes	Yes	

All destination scenarios support restart of source and derived envelopes.
Only the SDI destination scenarios supports resend of single requests.

MailRoom supports versioning of a document, which is used, for example, when an exit (kernel or destination) modifies a document and the new version is saved in the MailRoom Transport Tables. When a derived envelope is restarted and an exit apply for the scenario, the exit will be executed again and another version of each of the documents involved is created. This could have consequences for performance as the MailRoom Transport Tables will grow.

Note: If restarting a derived envelope to which Extended Routing applies, the result can be unpredictable. If restart is requested on such an envelope, the requests will fail and an event will be inserted for each failing request: *Fanning is not possible during restart*. The restart of an envelope to which Extended Routing applies should be done from the source envelope.

Process restart of Source Envelopes

The restart transaction will run through all the requests and insert the documents as a new Source Envelope. The original Source Envelope and all its requests are placed in status CANCEL to indicate that is has been replaced by another envelope. An event will be inserted on both envelopes to make a reference between the two envelopes.

All processing of the new Source Envelope is done as if the envelope was received the normal way.

A restarted Source Envelope will take up new space in the DB2 tables, and it should only be used when absolute necessary, for example when Extended Routing is used.

Process restart of derived envelopes

The restart transaction will run through all the requests in the derived envelope and restart each of them.

The restart of a derived envelope will trigger the creation of a new Destination Envelope, and the envelope key for this one will be updated on the Derived Envelope. This means that if a derived envelope has been restarted one time, then two Destination Envelopes exist, one which is not of interest, and one new Destination Envelope of current interest. The new Destination Envelope is the one that will be shown on the MailRoom panels.

All exits specified on the service will be called to process the document for each request in the derived envelope.

Process resend of single requests

The resend of a request can only be done for a Derived Envelope, where the destination is a SDI Destination, and the processing has completed down to the sending point. The resend will be done from the sending level, meaning that no kernel or destination exits are invoked again.

The last stored version of the document in the transport tables will be sent to the destination.

Error handling

BTB System Errorlog

The panel shows a list of all errors that are logged to the BTB System Errorlog. The System error log is a DB2 table. If the DB2 system is unavailable, these messages can be found on the CICS SYSOUT log. For IMS transactions the messages will be in the SYSPRINT of the IMS Region.

How accessed

- **Fast path** ERRLOG
- **Menu path** From menu *BTB Operation*, when choice 1 *Browse System Errorlog* is entered.

List panel for BTB System Errorlog

```
KBHDBMCL                          System Errorlog                          BTB

Type one or more action codes, then press Enter.
Action codes: S=Select

   ________ 2000-04-05________  ________ ________ _________________________
A  System   Log Date   Time      Userid   Program  First line of Error msg.
_  IMM      2000-04-05-06.34.25  DK0BJO   KBAXDIP  KBAXDI018 A Link to progra
_  IMM      2000-04-05-06.34.25           KBAXDIP  KBAXDI018 A Link to progra
_  IMM      2000-04-05-06.34.26           KBAK0AP  ELA00105I Error occurred a
_  IMM      2000-04-05-09.22.32           KBAK0AP  ELA00105I Error occurred a
_  IMM      2000-04-05-09.22.32           KBAK0AP  ELA00105I Error occurred a
_  IMM      2000-04-05-09.23.43           KBHUIDM  DSNT408I SQLCODE = -922, E
_  IMM      2000-04-05-09.35.01           KBHUIDM  DSNT408I SQLCODE = -922, E
_  IMM      2000-04-05-09.44.24           KBHUIDM  DSNT408I SQLCODE = -922, E
_  IMM      2000-04-05-09.45.26           KBAGFUP  KBAGFU007 A Requestor ID n
_  IMM      2000-04-05-09.47.55           KBAXDIP  KBAXDI013 A No data receiv
_  IMM      2000-04-05-09.59.51           KBAGFUP  KBAGFU007 A Requestor ID n
_  IMM      2000-04-05-10.00.34           KBAXDIP  KBAXDI013 A No data receiv
_

Command  ===>
F1=Help      F3=Exit      F5=Refresh   F6=Bottom    F8=Forward   F12=Can
```

Figure 73. System Errorlog panel

Panel shows a list of logged system errors. Here is a description of the fields:

System System identifier, in this case it is the CICS system ID.

Log date Format: YYYY-MM-DD-. Date the error was logged.

Userid The user ID initiating the BTB process.

Program Program inserting the error.

First line of Error message
Select the error to get details of the error message.

Detail panel

```
KBHDCM1S                 Details of System Errorlog                BTB


Error Time . . . : 2000-04-05-06.34.26.880000
RACF Userid. . . :                            System Id. . . . : IMM
Program. . . . . : KBHUIDM                    Transaction. . . : EXPR
Process. . . . . : GET_TIMESTAMP              Task no. . . . . : 0000050
Object / Table . : --N/A--                    Terminal . . . . :
Called from. . . :        3                   Subsystem. . . . : PLI SQL
Message. . . . . : SQL-922                    Severity . . . . : A

Error Message. . :
DSNT408I SQLCODE = -922, ERROR:  AUTHORIZATION FAILURE: PLAN ACCESS ERROR
DSNT418I SQLSTATE   = 42505 SQLSTATE RETURN CODE
DSNT415I SQLERRP    = DSNAET03 SQL PROCEDURE DETECTING ERROR




Command  ===>
F1=Help      F3=Exit      F12=Cancel
```

Figure 74. Details of System Errorlog panel

Here is a description of the fields:

Error time DB2 time-stamp when error message was inserted.

RACF Userid The user ID initiating the BTB process.

System ID CICS or IMS system identifier.

Program Program inserting the error message.

Transaction CICS or IMS transaction.

Process Process that caused the error message.

Object / Table Object or DB2 table that caused the error. For subsystem MAILROOM: the country code

Terminal CICS terminal or IMS transaction.

Called from Where this process or module was called from, or in this case it was DB2 accessed from the third DB2 call in this program.

Subsystem Subsystem where the error occurred, for example, from a PLI DB2 program, MailRoom, or DI-EDI scenario.

Message The error message.

Severity Error severity.

- **A** Action needed
- **I** Information
- **W** Warning

Error message

The error message.

F1 - HELP

For information about DB2 errors, press F1 help.

Help panel

```
KBHDCM1S             Details of System Errorlog - Help

   From the panel it is possible to see all the detail fields from a
   System Errorlog entry.

   Selection mode
                All fields are protected.
                Press F12 to return to list

   Related information
 _ (Common DB2 Resource Types - Help)
 _ (Common DB2 Reason Codes - Help)

   Function keys
     The normal Function keys for a detail panel are valid.

F1=Help      F3=Exit      F12=Cancel
```

Figure 75. Details of System Errorlog - Help panel

Place the cursor next to *Common DB2 Resource Types* and a list of the most common DB2 resource types is displayed:

Common DB2 Resource Types - Help

```
KBHDCDB2              Common DB2 Resource Types - Help

   The following list is extracted form the DB2 Messages and Codes

   The possible codes are:

   +-------------------------------------------------------------------
   | Figure x. Resource Types
   +----------------+-------------------------------------+-------------
   | TYPE Code      | Type of Resource                    | Name, Conten
   |                |                                     | Format
   +----------------+-------------------------------------+-------------
   | 00000100       | Database                            | DB
   +----------------+-------------------------------------+-------------
   | 00000200       | Table space                         | DB.SP
   +----------------+-------------------------------------+-------------
   | 00000201       | Index space                         | DB.SP
   +----------------+-------------------------------------+-------------
   | 00000202       | Table space                         | RD.DB.TS

F1=Help      F3=Exit      F8=Forward   F12=Cancel
```

Figure 76. Common DB2 Resource Types - Help panel

Place the cursor in front of *Common DB2 Reason codes* and a list of the most common DB2 reason codes is displayed:

Common DB2 Reason Codes - Help

```
KBHDCDB2               Common DB2 Reason Codes - Help

   The following list is extracted from the DB2 Messages and Codes
   It is like a 'Hitch-hikers guide to DB2 Reason Codes'

   The most common DB2 Reason Codes are: (list is NOT complete...)

   Reason Code  Short description
   -805: 01     DBRM name not in member or package list
   -805: 02     The collection or location in package list is wrong
   -805: 03     DBRM found in package list but not this version
   -805: 04     Remote DBRM does not exist on remote system

   00C200E1     DB2 is unable to open a VSAM dataset (error)
   00C200E2     DB2 is unable to open a VSAM dataset (dyn alloc err)
   00C200F6     DB2 is unable to open a VSAM dataset (migrated)
   00C200F8     DB2 is unable to open a VSAM dataset (I/O error)
   00C200FA     DB2 is unable to open a VSAM dataset (timeout)


F1=Help      F3=Exit      F8=Forward   F12=Cancel
```

Figure 77. Common DB2 Reason Codes - Help panel

Error notification

The person responsible for MailRoom is notified via note to ISERROR list in the event of an error situation occurring. This list is defined in the WC table:

```
KBHWDMII              Insert new Working Criteria Entry             BTB

Press Enter to insert new WC Table Entry


Country code . . . . . . 000

Key. . . . . . . . . . . DIST-XSERROR   1
                         DIST-ddddddddxxx

Value. . . . . . . . . . HO XXUSER  YYYYVM1_______________
                         HO uuuuuuuunnnnnnnn

Comment. . . . . . . . .
Node and user ID which will receive ISERROR notifications _______________

Command  ===>
F1=Help      F3=Exit      F12=Cancel
```

Figure 78. Insert new Working Criteria Entry panel

One or more entries like this can be specified, and all *subscribers* will receive the error notification notes. See the online help (context sensitive) to this entry in the WC table for more information about specifying the entry.

Autofail and warning report

The autofail and warning report is a scanner that searches for documents in status SCHDUL, PENDING, PEND.OVD, XMITQ and BATCH for an extended time period. Depending on the setup in the WC table the scanner creates a warning report, and later it will fail or complete the documents. The report will be sent to *subscribers* off the ISERROR list.

Depending on your requirements, you can use the Autofail scanner to alert you if external acknowledgments are not received.

Autofail warning report

Here is an example of the report produced by the scanner:

```
Subject: MailRoom Autofail and warning report

System: IMB Mailroom CICS, IMB Development
Date:   2000-05-26      Time: 06:29:11

The documents below have been found to be in the same state for too
long.

Report conditions are:

State          Days before warning   Days before AUTOFAIL/COMPLETE
BATCH                  010                     038
PENDING                001                     023
SCHDUL                 005                     015
XMITQ                  001                     008


Documents listed with action 'WARNING' have been selected because the
MailRoom has been waiting for a state change for too long.
No action has been performed at this time, but documents can later be
affected by AUTOFAILing or COMPLETion.
Manual intervention to change the current status is suggested.
Number of documents with WARNING.: 00003

Documents listed with action 'AUTOFAIL' have been placed in FAIL state
in the MailRoom. No further notification will be sent.
Number of documents with AUTOFAIL: 00000

Documents for BATCH destinations with no acknowledgment (level 0), that
have not yet been read, are listed with FINISH state. The MailRoom is
monitoring them until read by the Batch Read Utility. When time is up,
they will no longer be available for read, and have action 'COMPLETE'.
Number of documents with COMPLETE: 00000


Envelope  SeqN Status   Action   Days Dest     Cty To TP     Layout
---------+----+--------+--------+----+--------+---+---------+----------
C2XLQ9427 0001 PENDING  WARNING  0001 SAP-MQ   123 000995999 LAYOUT02
OISVY9427 0001 XMITQ    WARNING  0001 TIE-IMS  123 000800800 PGM-TO-IMS
TKYEI9427 0001 PEND.OVD WARNING  0001 PGM-CICS 123 000995999 TESTPGM
```

Scanner setup

The scanner is using some specific entries in the WC table *AUTOFAIL xxxxxxxx* to control the report and the autofail function.

```
KBHWDMIM               Modify Working Criteria Entry              BTB

Press Enter to modify WC table Entry



Country code . . . . . : 000

Key. . . . . . . . . . : AUTOFAIL XMITQ
                         AUTOFAIL XMITQ

Value. . . . . . . . . . 001 010_____________________________
                         ddd ddd

Comment. . . . . . . . .
Report old documents in status XMITQ after 1 days, autofail after 10 days




Command  ===>
F1=Help      F3=Exit      F12=Cancel
```

Figure 79. Modify Working Criteria Entry panel

See the online help to this entry in the WC table for more information about specifying these entries.

Service Point of Contact (SPOC)

In some situations only the person responsible for the service will be notified. The electronic address is specified on the service definition panel.

An example is the Overdue notifications, that normally indicates a user application error. This type of information is not directly relevant for an ISERROR responsible and is therefore only sent to the SPOC.

Chapter 11. MailRoom Audit Facilities

Audit logging and reconciliation

The Audit scope handles the receive and send process in the MailRoom region from the point where Expedite/CICS has completed a receive request for Information Exchange, to the point where the transaction is available for the Business application, or to the point where the Business application has finished processing the data. When to stop the Audit scope is decided by the MailRoom administrator, depending on the acknowledgment level set for the MailRoom service.

Overview

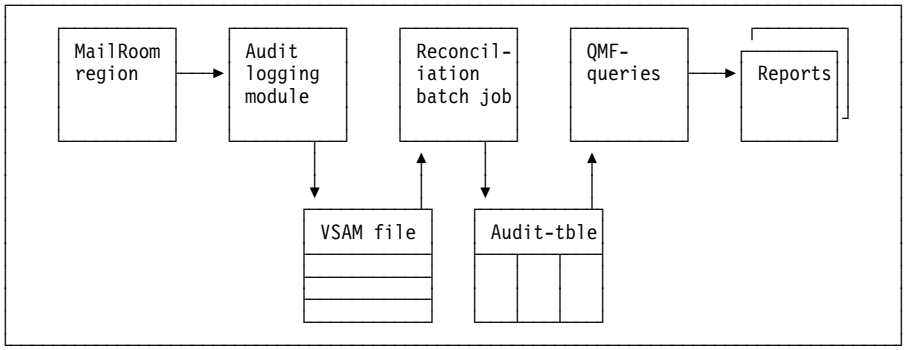

On an event driven basis, an audit logging module will be invoked at certain points during the process. Data is then stored in a VSAM data set.

The log records are read (using MVS batch JCL) and added to a set of DB2 audit tables.

The audit tables can then be used to perform reconciliations. There is a set of QMF procedures delivered with the package, which satisfy a basic set of requirements. When necessary, the delivered QMF procedures can be modified and amended according to your specific needs.

Daily reconciliation

There are three reasons for executing the audit reconciliation procedures:

1. Detecting errors during data processing, such as loss of data before it reaches the MailRoom
2. Keeping track of data sent from the MailRoom to all back-end systems
3. Gathering statistical information

You should run this job daily for statistical purposes. If the purpose was to detect errors, you might wish to have the data as current data as possible. You can then run the job with shorter intervals during online processing. You can run this job in parallel with online processing, as often as required. The job will automatically continue with the first unextracted VSAM record.

© Copyright IBM Corp. 1992, 2002

The job is **KBASCDAY**.

Periodic reconciliation and cleanup

Periodically the VSAM file will need to be reset. Job **KBASCPER** can be used for this purpose. First the standard reconciliation program will be executed and then the the VSAM cluster is delete/defined. The VSAM file is allocated exclusively for the delete/define step, so it cannot be updated in parallel from the MailRoom CICS region. Either the region has to be stopped, or the MailRoom transactions have to be stopped.

Audit logging in the source scenarios

Overview

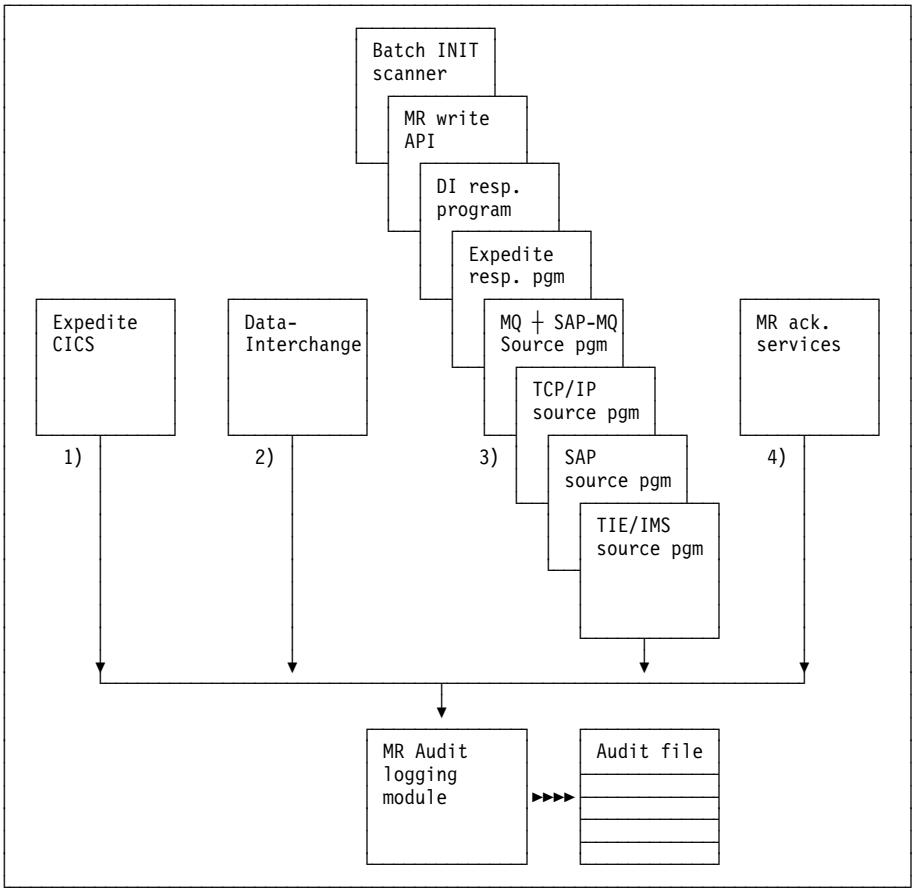

1. **Expedite/CICS** calls the audit logging module when the receive request against Information Exchange has either completed or failed.
2. **DataInterchange** calls the audit logging module after de-enveloping the Interchange.
3. **MailRoom source modules** call the audit logging module after the incoming data has been stored successfully in the MailRoom transport tables as a source envelope.
4. **MailRoom ack. services** call the audit logging module when all requests in a source envelope are either in status **FAILED** or **FINISH**.

Data collecting points and relations to the audit tables

Log point	Table
Expedite/CICS when flat files	KBDTAX
Expedite/CICS when EDI	KBDTAX
DataInterchange when de-enveloping	KBDTDI
APPC source modules	KBDTAE
Batch INIT scanner	KBDTAE
MailRoom write API	KBDTAE
MailRoom response program for DataInterchange	KBDTAE
MailRoom response program for Expedite/CICS	KBDTAE
MQ source modules	KBDTAE
TCP/IP source modules	KBDTAE
SAP source modules	KBDTAE
SAP-MQ source modules	KBDTAE
TIE/IMS source modules	KBDTAE
TIE-MQ source modules	KBDTAE
MailRoom acknowledgment services when final status	KBDTAE

Enable the audit logging module

To enable the BTB audit logging facilities, you must define an audit logging user exit in Expedite/CICS and DataInterchange.

The user exit will log information about the received data into a VSAM file (KBAASCA) and the logged data can be used in the audit reconciliation batch jobs.

This applies to the DI-EDI, EXP-DOC and EXP-FILE source scenarios.

Expedite/CICS

This exit is invoked whenever the Expedite/CICS receive function has written the received data from IE into the receive destination. For BTB, the receive destination will be either a response program defined in Expedite/CICS continuous/single receive, or it will be the de-enveloping function in DataInterchange.

You define the audit logging user exit by:

1. Logging on with your system administrator user ID. Expedite/CICS displays the Expedite/CICS Main Menu Selection panel.
2. Select option 6, **Work with system administration.** Expedite/CICS displays the System Administration Selection Menu panel
3. Select option 2, **System options.** Expedite/CICS displays the panel shown in Figure 80 on page 200.
4. Specify **User information exit program name** and **User info exit active** as shown in Figure 80 on page 200.

```
EXPMAD9                Define System Options

Account      SYSTEM
Userid       DEFAULT

Description                            Default Value       Current Value

Temporary storage queue prefix..... < S@# >           < S@# >
Exception reporting TDQ............... < EXPM >          < EXPM >
Activity monitor interval..(0500-5959). < 3000 >   (MMSS) < 1000 >
Batch monitor interval.....(0000-5959). < 0000 >   (MMSS) < 0000 >
Data transmission size...(03700-26000). < 26000 >         < 26000 >
User information exit program name..... < EXPOUEXT >      < KBAGAEP  >
User info exit active.. (Y=Yes, N=No).  < N >              < Y >
Internal reader TDQ................... < IRDR >          < IRDR >
Log TDQ............................... < EXPL >          < EXPL >
Internal trace TSQs................... < EXPDTRCA/B >    < EXPDTRCA/B >
LU 6.2 IE connection name.............. < INIE >          < INIE >
Information exchange (IE) level........ < 04.02 >         < 04.02 >

HI305 ENTER FIELD INFORMATION AND PRESS PF3(END) TO SAVE CHANGES.

Command ===>
PF3=End  PF12=Cancel
```

Figure 80. Define System Options

DataInterchange

The user exit in DataInterchange that is used for audit logging purposes is the *Monitor program* specified on the *Application definition profile*. It is essential that all activity logs specified in DataInterchange also are associated with an *Application definition profile* where the audit logging user exit is specified.

The monitor program will be invoked, once a complete envelope is generated or de-enveloped. The monitor program logs only during de-enveloping.

You define the audit logging user exit by:

1. Logging on to DataInterchange. DataInterchange displays the Main Menu Selection panel.
2. Select option 2, **Profiles.** DI displays the Profile Definitions panel.
3. Type a **M** next to the profile ID ACTLOGS. DI lists all activity log members. For each of these members you must define an Application definition profile.
4. Return to the Profile Definitions panel.
5. Type a **M** next to the profile ID APPDEFS. DI lists all Application definition profiles.
6. If no APPDEFS profiles exist for your activity logs, add them. If APPDEFS profiles exist for your activity logs, update them.

The APPDEFS profiles should look like this sample for EDIFFS:

```
Profile ID  . . . : APPDEFS

Application ID  . : EDIFFS
ACTLOGS member  . : EDIFFS__
Mgt. Rpt. active? : Y
Trx. Store active?: Y
Trx. Image wanted?: Y
Monitor program . : KBAGAEP_
```

Audit reconciliation reports delivered

Daily summary report

The report shown in Figure 81 on page 202 is produced each time you run the VSAM extract program.

```
     Audit REPORT OF MailRoom ACTIVITIES
FROM 2000-03-06 13.40.20 TO 2000-03-08 15.12.21


SOURCE    STATUS                  COUNT
--------  ----------------  -----------
APPC      PR-MR-FAILED                0
          FAILED                      0
          FAILED PARTIAL              0
          PROCESSING                  0
          FINISHED                    0
                            -----------
                          *           0

BATCH     PR-MR-FAILED                0
          FAILED                      0
          FAILED PARTIAL              0
          PROCESSING                  0
          FINISHED                    0
                            -----------
                          *           0

DI-EDI    UNRESOLVED EX               0
          UNRESOLVED DI               0
          PRE-MR-FAILED               0
          FAILED                      0
          FAILED PARTIAL              0
          PROCESSING                  0
          FINISHED                    0
                            -----------
                          *           0

EXP-FILE  UNRESOLVED                  0
          PRE-MR-FAILED               0
          FAILED                      0
          FAILED PARTIAL              0
          PROCESSING                  0
          FINISHED                    0
                            -----------
                          *           0

MQ        PRE-MR-FAILED               0
          FAILED                      0
          FAILED PARTIAL              0
          PROCESSING                  0
          FINISHED                    2
                            -----------
                          *           2

PGM       PRE-MR-FAILED               0
          FAILED                      0
          FAILED PARTIAL              0
          PROCESSING                 14
          FINISHED                    0
                            -----------
                          *          14
```

Figure 81 (Part 1 of 2). Summary report

```
SAP       PRE-MR-FAILED              0
          FAILED                     0
          FAILED PARTIAL             0
          PROCESSING                14
          FINISHED                   0
                                -----------
                            *          14

SAP-MQ    PRE-MR-FAILED              0
          FAILED                     2
          FAILED PARTIAL             0
          PROCESSING                 0
          FINISHED                   2
                                -----------
                            *           4

TCPIP     PRE-MR-FAILED              0
          FAILED                     0
          FAILED PARTIAL             0
          PROCESSING                 0
          FINISHED                  12
                                -----------
                            *          12

TIE-IMS   PRE-MR-FAILED              0
          FAILED                     0
          FAILED PARTIAL             0
          PROCESSING                 5
          FINISHED                   0
                                -----------
                            *           5

TIE-MQ    PRE-MR-FAILED              0
          FAILED                     0
          FAILED PARTIAL             0
          PROCESSING                 0
          FINISHED                   0
                                -----------
                            *           0

                                ===========
                                        51
```

Figure 81 (Part 2 of 2). Summary report

The report shows the status on all transactions at source envelope level since the last time of reconciliation.

Use the QMF queries delivered with the package as an example on how to make queries for your specific needs.

Here is an explanation of the fields shown in Figure 81 on page 202:

UNRESOLVED EX
: Data received from the Expedite/CICS exit, and no more data has been logged neither in the DataInterchange exit, nor in the source layer. A detail report will follow, containing all data received.

UNRESOLVED DI
: Data received from the DataInterchange exit, but no more data has been logged from the source layer. A detail report will follow, with all data listed.

PRE-MR-FAILED
: Transmission failed before entering the MailRoom. A detail report will follow with all data listed.

FAILED, FAILED PARTIAL
Transmission failed in MailRoom. A detail report will follow, for further information you may use on-line monitoring.

PROCESSING Mail is still processing. A detail report will follow, for further information you may use on-line monitoring.

FINISHED Final status is finished - all sent ok. (No detail report).

Daily detail problem reports

Five detail reports are delivered:

1. **Detail report DI-EDI, status = UNRESOLVED**. The report covers all data regarding this transaction.
2. **Detail report EXP-FILE, status = UNRESOLVED**. The report covers all data regarding this transaction. (The two reports are similar, except that different data is logged in the two source types).
3. **Detail report, status = PR-MR-FAILED**. Transmission failed before entering the MailRoom. The report will list all data available. For example. Task, Error Msg, Country code.
4. **Detail report, status = FAILED**. Transmission failed in the MailRoom. The report is an example of a limited extract of data available, and can be used as a summary. On-line monitoring will give you further information.
5. **Detail report, status = PROCESSING**. Transmission is still in processing status.. The report is a limited extract of data available. On-line monitoring will give you further information.

Appendix A. Getting started with Business Transaction Broker

To log on to BTB and navigate to the main menu, first log on to the CICS system where BTB runs. You get the screen shown in Figure 82.

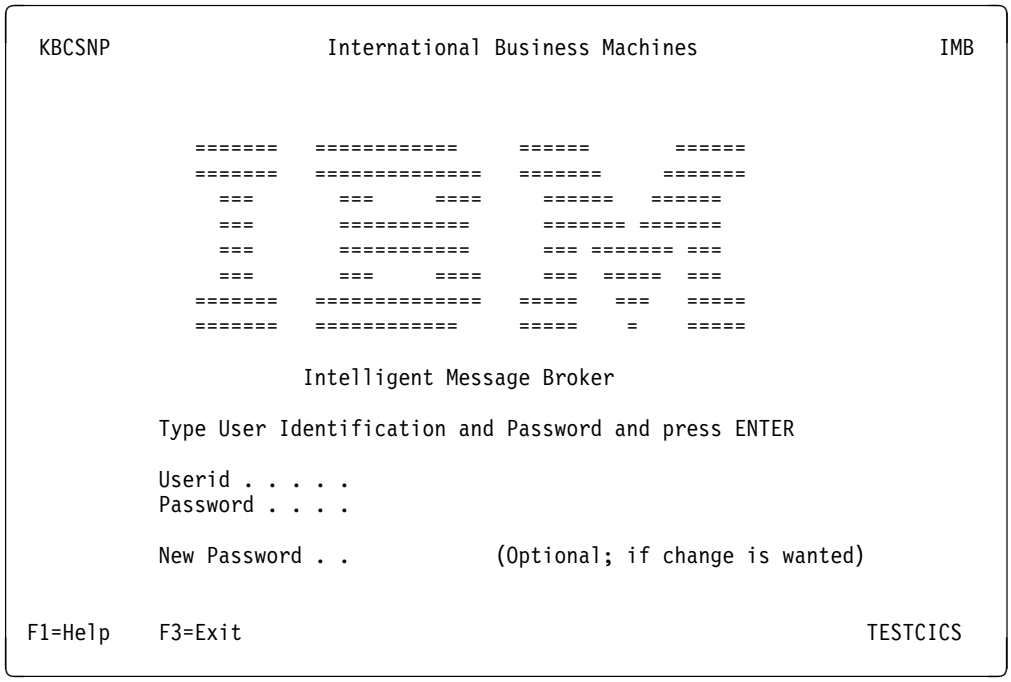

Figure 82. BTB logon panel

Enter a user ID and password and press enter to get to the BTB Main Panel shown in Figure 83 on page 206.

© Copyright IBM Corp. 1992, 2002

```
MENU                                Main Panel                            IMB

Type choice or fastpath, then press Enter.


_  A. ADM    Administration
   C. COM    Overview - all commands

                                    .----------------------------------------.
                                    | User...: XXUSER                        |
                                    | from...: IBM Denmark, IMB Admin        |
                                    '----------------------------------------'
KBH001I Welcome to IMB 4.5 (c) Copyright IBM Denmark A/S 2002
Command  ===>
```

Figure 83. Main Panel

Figure 83 shows the BTB Main Panel. To get a description of the choices, press F1. To leave BTB press F3.

To select an option, type your choice in the choice field and press Enter.

Or type a fastpath command. To see a list of fastpath commands type **COM**.

Using BTB list panels

Type fastpath command **AGREM** to get the panel shown in Figure 84

```
KBEFBMIL                        Agreement Sets                          IMB

Type one or more action codes, then press Enter.
Action codes: B=BPIs in set   O=Options in Set  S=Services in Set
              T=Trading Partner Access  I=Insert  M=Modify  D=Delete



  ________ ___________________________________________
A  Agr.Set  Description
_  BPI-4    IMB Sample BPI
_  EDI-4+   MailRoom 4.x Sample Services
_  KBHCEADM IMB Central User Administration
_  KBHDEVL  IMB Test Applications for Developer
_  KBHEDS   IMB MailRoom Monitor Application
_  KBHINSTL IMB Installation Applications
_  KBHOPER  IMB Operation Applications
_  LSO      Local security officer. DO NOT DELETE
_  MENU     Common for all users.   DO NOT DELETE

Command  ===>
F1=Help      F3=Exit      F12=Cancel
```

Figure 84. Agreement Sets panel

Most BTB list panels include seven areas:

Panel identification
The panel ID (KBEFBMIL) is shown in the upper left corner, and the panel title is centered on the same line.

Action bar A list of possible action codes that you can select for one of the items on the list.

The actions available on the agreement sets panel are:

B View a list of BPIs included in this agreement set
O View a list of Options included in this agreement set
S View a list of Services included in this agreement set
T View a list of Trading Partners linked to this agreement set
I Insert an Agreement Set
M Modify an Agreement Set
D Delete an Agreement Set

Type one of the actions next to the item you want to work with.

Search criteria line
If you want to make a generic search in the Agreement sets list, type your search criteria on this line.

Panel body The panel body shows a list of selectable items with an action field in front.

Message line
The message line will show a relevant message if, for example an invalid action or F-key is used.

Command line
Is used for typing in fastpath commands.

Function keys
A list of active function keys. The active function keys on the Agreement sets panels are:

F1 Displays online help for the panel
F3 Ends the current task
F7 Scrolls forward
F8 Scrolls backward
F12 Goes back one panel

Using BTB detail panels

Type fastpath command **SERVIC**, to get the panel shown in Figure 85 on page 208. Type **m** next to one of the items and you get a detail panel similar to the one shown in Figure 85 on page 208.

```
KBEIBMCL                      Mailroom Services                          IMB

Type one or more action codes, then press Enter.
Action codes: D=Delete  I=Insert  C=Copy  M=Modify  S=Select T=TP subscribers


 ___  ____  _______  _______________  ____________________________________
A  Cty  Appl  Service   Layout           Description
_  123  KBAW  KBAWTP11  XX-ORDER         Sample XX-ORDER to TP 11 via MAIL
_  123  KBAW  KBAWTP12  XX-ORDER         Sample XX-ORDER to TP 12 via FAX
_  123  KBAW  KBAWTP13  XX-ORDER         Sample XX-ORDER to TP 13 via DI-EDI
_  123  KBAZ  KBAZPGBA  PGM-TO-BATCH     Verification - PGM to BATCH
_  123  KBAZ  KBAZPGCI  PGM-TO-PGM-CICS  Verification - PGM to CICS
_  123  KBAZ  KBAZPGDI  PGM-TO-DI-EDI    Verification - PGM to DI-EDI
_  123  KBAZ  KBAZPGED  PGM-TO-EXP-DOC   Verification - PGM to EXP-DOC
_  123  KBAZ  KBAZPGEF  PGM-TO-EXP-FILE  Verification - PGM to EXP-FILE
_  123  KBAZ  KBAZPGFA  PGM-TO-FAX       Verification - PGM to FAX
_  123  KBAZ  KBAZPGMA  PGM-TO-MAIL      Verification - PGM to MAIL
_  123  KBAZ  KBAZPGTC  PGM-TO-TCPIP     Verification - PGM to TCPIP
_  123  KBAZ  KBAZPGTI  PGM-TO-TIE-IMS   Verification - PGM to TIE-IMS
_

Command  ===>
F1=Help      F3=Exit      F8=Forward   F12=Cancel
```

Figure 85. Modify MailRoom Service panel

Depending on the action chosen on the list panel, you are now viewing or working with an item.

Viewing an item
All fields are protected.

Working with an item
The modifiable fields are unprotected.

The function keys available depend on the type of action and the type of item. The most common function keys are:

Enter Returns to the List Panel. If the action was *Insert* or *Modify* the item is inserted or updated.

F1 Shows online panel help if cursor is placed in the protected area. Shows online field help if cursor is placed in the unprotected area.

F3 Ends the current task.

F4 If the plus (+) sign is displayed in a field, place the cursor on the field and press F4 to get a prompt list.

F7 Scrolls forward.

F8 Scrolls backward.

F12 Cancels this task, and goes back one panel.

Appendix B. Audit tables

The Audit tables are built by the MailRoom reconciliation utility job KBASCDAY or KBASCPER. The tables contain audit data logged during the processing of data in the MailRoom, and for source scenarios involving Expedite/CICS and DataInterchange, audit data that was also logged before data reached the MailRoom. This is done by specifying a user exit in Expedite/CICS and DataInterchange.

For each field in the tables it is shown the original provider of the audit data was.

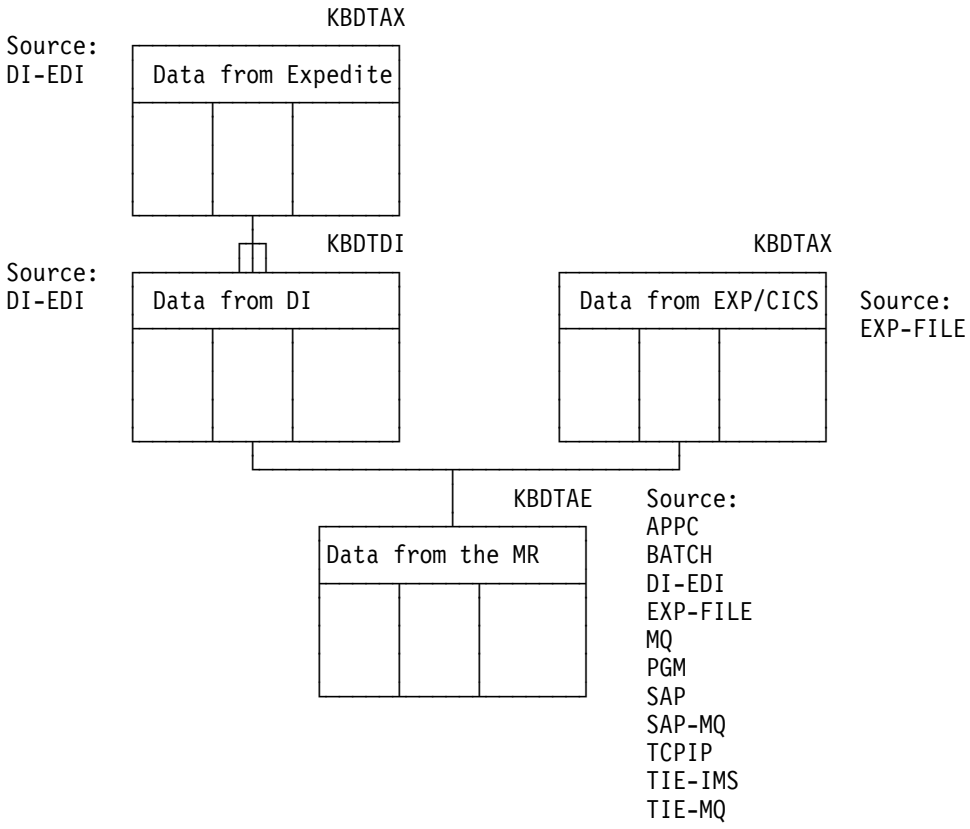

Figure 86. Audit tables

Abbreviations used for Owner:

CDH IE Common Data Header. Is described in *IBM EDI Services Information Exchange Interface Programming Guide*.

DIM DataInterchange Performance monitor user exit. Is described in *DataInterchange Programmer's Reference*.

DIRP Response program used in the DI-EDI source scenario.

EXPM Expedite/CICS information monitor user exit.

EXPP Response program used in the EXP-file and EXP-DOC source scenario.

I DataInterchange Information record. Is described in *DataInterchange Programmer's Reference*.

© Copyright IBM Corp. 1992, 2002

MR MailRoom

MSGL IE message long header. Is described in *IBM EDI Services Information Exchange Interface Programming Guide*.

REC Audit reconciliation utility.

KBDTAX table

This table contains audit data about EDI Interchanges received by Expedite/CICS and passed to DataInterchange and audit data about flat files received by Expedite/CICS.

The data was logged from the Expedite/CICS *user information monitor exit*. This user exit is invoked when Expedite/CICS has finished a receive request for Information Exchange.

The MailRoom source scenario involved is DI-EDI, EXP-FILE and EXP-DOC.

Field name	Type and Length	Description	Owner
SKBA_CESORCIM	Char 006	Reversed micro second.	REC
SKBA_TIMESTAMP	Timestmp	DB2 Time-stamp when inserted.	REC
SKBA_STATUS	Char 010	Envelope status code.	EXPM
SKBA_MSGID	Char 010	Current MailRoom message id for envelope.	EXPM
SKBA_LOG_TMSTP	Timestmp	Time-stamp when logged on the Audit file.	EXPM
SKBA_TASK	Char 007	CICS task number.	EXPM
SKBA_TRANS	Char 004	CICS transaction ID.	EXPM
SKBA_APPLID	Char 008	CICS applid.	EXPM
SKBA_RESP	Char 005	Expedite/CICS completion code. HI000 indicates successful completion; any other value indicates an error.	EXPM
SKBA_UXTYPE	Char 008	Type of user exit.	EXPM
SKBA_DIRECTION	Char 001	Sent(S) or Received(R).	EXPM
SKBA_EDISQUAL	Char 004	Interchange sender qualifier.	EXPM
SKBA_EDISENDR	Char 035	Interchange sender ID.	EXPM
SKBA_EDIRQUAL	Char 004	Interchange receiver qualifier.	EXPM
SKBA_EDIRECVR	Char 035	Interchange receiver ID.	EXPM
SKBA_EDICNTLN	Char 014	Interchange control number.	EXPM
SKBA_CACCT	Char 008	Senders IE account.	EXPM
SKBA_CUSER	Char 008	Senders IE user ID.	EXPM
SKBA_CLTYP	Char 001	Receiver's alias table type.	EXPM
SKBA_CLID	Char 003	Receiver's alias table ID.	EXPM
SKBA_CDACCT	Char 008	Receiver's IE account.	EXPM
SKBA_CDUSER	Char 008	Receiver's IE user ID.	EXPM
SKBA_CDTYPE	Char 001	Receivers destination type.	EXPM
SKBA_MSGUCLS	Char 008	Message user class.	EXPM
SKBA_UNIQUE	Char 008	Unique ID from Common Data Header.	EXPM
SKBA_UXDATE	Char 008	CICS date in format YYYYMMDD.	EXPM
SKBA_UXTIME	Char 006	CICS time in format TTMMSS.	EXPM
SKBA_ENVSIZE	Char 011	Envelope size.	EXPM

Field name	Type and Length	Description	Owner
SKBA_NEDITRN	Char 011	Number of transactions in envelope.	EXPM
SKBA_IESIZE	Char 011	IE message size.	EXPM
SKBA_APPREF	Char 014	Interchange application reference.	EXPM
SKBA_USERAREA	Char 014	User area.	EXPM
SKBA_CONTROL	Char 008	Type of control field from IE, 1 byte + unique numeric ID.	EXPM
SKBA_TYPE_SRC	Char 008	Source scenario type.	REC
SKBA_ENV_SRC	Char 012	Source envelope ID.	REC
SKBA_MATCH_DI	Char 001	Does this record have associated entry in KBDVDI, N/Y/X.	REC
IUSRUUL	Char 008	user ID that updated last time.	REC
DSYSRPT	Timestmp	Times- for latest update.	REC

Table 5. KBDTAX table

Key	*Relations*
SKBA_CESORCIM	KBDTDI.SKBA_DE_CESORCIM
SKBA_TIMESTAMP	KBDTDI.SKBA_DE_TMSTP
SKBA_ENV_SRC	KBDTAE.SKBA_ENV_SRC

KBDTDI table

The table contains audit data about EDI Interchanges de-enveloped by DataInterchange.

The data was logged from the DataInterchange *performance monitor exit*. This user exit is invoked when DataInterchange has de-enveloped an Interchange.

MailRoom source scenario involved is DI-EDI.

Field name	Type Length	Description	Logged by
SKBA_CESORCIM	Char 006	Reversed micro second.	REC
SKBA_TIMESTAMP	Timestmp	DB2 Time-stamp when inserted.	REC
SKBA_STATUS	Char 010	Envelope status code.	DIM
SKBA_MSGID	Char 010	Current MailRoom message id for envelope.	DIM
SKBA_LOG_TMSTP	Timestmp	Time-stamp when logged on the Audit file.	MR
SKBA_TASK	Char 007	CICS task number.	DIM
SKBA_TRANS	Char 004	CICS transaction ID.	DIM
SKBA_APPLID	Char 008	CICS applid.	DIM
SKBA_RESP	Char 005	Expedite/CICS completion code. HI000 indicates successful completion; any other value indicates an error.	DIM
SKBA_EDISQUAL	Char 004	Interchange sender qualifier.	DIM
SKBA_EDISENDR	Char 035	Interchange sender ID.	DIM
SKBA_EDIRQUAL	Char 004	Interchange receiver qualifier.	DIM
SKBA_EDIRECVR	Char 035	Interchange receiver ID.	DIM
SKBA_EDICNTLN	Char 014	Interchange control number.	DIM
SKBA_DE_CESORCIM	Char 006	Reversed micro second.	REC
SKBA_DE_TMSTP	Timestmp	Time-stamp when inserted	REC

Field name	Type Length	Description	Logged by
SKBA_ENV_SRC	Char 012	Source envelope ID.	REC
IUSRUUL	Char 008	user ID that updated last time.	REC
DSYSRPT	Timestmp	Time-stamp for latest update.	REC

Table 6. KBDTDI table

Key	*Relations*
SKBA_CESORCIM	Primary key
SKBA_TIMESTAMP	Primary key
SKBA_DE_CESORCIM	KBDTAX.SKBA_CESORCIM
SKBA_DE_TMSTP	KBDTAX.SKBA_TIMESTAMP
SKBA_ENV_SRC	KBDTAE.SKBA_ENV_SRC

KBDTAE table

This table contains information collected in two stages:

1. Audit information from all MailRoom source APIs. The logging is done as soon as the incoming data is stored in the transport tables.
2. Audit information from the MailRoom acknowledgment services. The logging is done when the MailRoom finds a source envelope where all related requests have reached a final status. The final status being *FINISH*, *FAIL*, or *PEND.OVD*.

Field name	Type Length	Description	Logged by
SKBA_ENV_SRC	Char 012	Source envelope ID.	MR
SKBA_STATUS	Char 010	Envelope status code.	MR
SKBA_MSGID	Char 010	Current MailRoom message id for envelope.	MR
SKBA_LOG_TMSTP	Timestmp	Time-stamp when logged on the Audit file.	MR
SKBA_TASK	Char 007	CICS task number.	MR
SKBA_TRANS	Char 004	CICS transaction ID.	MR
SKBA_APPLID	Char 008	CICS Application ID.	MR
SKBA_TYPE_SRC	Char 008	Source envelope type.	MR
SKBA_IOPUCTY	Char 003	Country code.	MR
SKBA_TPID_TO	Char 035	To Trading Partner number.	MR
SKBA_TPID_FROM	Char 035	From Trading Partner number.	MR
SKBA_LAYOUT	Char 016	MR layout.	MR
SKBA_TOTDOC	Integer	Number of documents in source envelope	MR
SKBA_GL_ACC01	Char 031	Global accumulator no 1 from DI.	DIRP
SKBA_GL_ACC02	Char 031	Global accumulator no 2 from DI.	DIRP
SKBA_GL_ACC03	Char 031	Global accumulator no 3 from DI.	DIRP
SKBA_GL_ACC04	Char 031	Global accumulator no 4 from DI.	DIRP
SKBA_GL_ACC05	Char 031	Global accumulator no 5 from DI.	DIRP
SKBA_GL_ACC06	Char 031	Global accumulator no 6 from DI.	DIRP
SKBA_GL_ACC07	Char 031	Global accumulator no 7 from DI.	DIRP

Field name	Type Length	Description	Logged by
SKBA_GL_ACC08	Char 031	Global accumulator no 8 from DI.	DIRP
SKBA_GL_ACC09	Char 031	Global accumulator no 9 from DI.	DIRP
SKBA_GL_ACC010	Char 031	Global accumulator no 10 from DI.	DIRP
SKBA_EF_ACCNTNO	Char 008	Receivers IE account (MSGL.ACCNTNO)	EXPRP
SKBA_EF_USERID	Char 008	Receivers IE user ID (MSGL.USERID)	EXPRP
SKBA_EF_DESTACCT	Char 008	Senders IE account (MSGL.DESTACCT)	EXPRP
SKBA_EF_DESTUID	Char 008	Senders IE user ID (MSGL.DESTUID)	EXPRP
SKBA_EF_MSGSEQN	Char 005	IE message sequence number (MSGL.MSGSEQN)	EXPRP
SKBA_EF_MSGUCLS	Char 008	Message user class (MSGL.MSGUCLS)	EXPRP
SKBA_EF_MSGDATE	Char 006	IE message date (MSGL.MSGDATE)	EXPRP
SKBA_EF_MSGTIME	Char 006	IE message time (MSGL.MSGTIME)	EXPRP
SKBA_EF_UNIQUE	Char 008	Unique ID (CDH.UNIQUEID)	EXPRP
SKBA_DI_EDISENDR	Char 035	Interchange sender ID (I.ISID)	DIRP
SKBA_DI_EDIRECVR	Char 035	Interchange receiver ID (I.IRID)	DIRP
SKBA_DI_EDICNTLN	Char 014	Interchange control number (I.IHXCTL)	DIRP
SKBA_DI_CACCT	Char 008	Senders IE account (MSGL.DESTACCT)	DIRP
SKBA_DI_CUSER	Char 008	Senders IE user ID (MSGL.DESTUID)	DIRP
SKBA_DI_CDACCT	Char 008	Receiver's IE account (MSGL.ACCTNO)	DIRP
SKBA_DI_CDUSER	Char 008	Receiver's IE user ID (MSGL.USERID)	DIRP
SKBA_PARENT	Char 001	Does this record have associated entries in KBDVAX, Y/N	REC
SKBA_FLOG_TMSTP	Char 026	Final log time-stamp from MailRoom	REC
SKBA_ACK_OK	Integer	No of documents acknowledged OK	MR
SKBA_ACK_NOK	Integer	No of documents not acknowledged OK	MR
IUSRUUL	Char 008	user ID that updated previously.	REC
DSYSRPT	Timestmp	Time stamp of the latest update.	REC

Table 7. KBDTAE table

Key	*Relations*
SKBA_ENV_SRC	KBDTDI.SKBA_ENV_SRC
	KBDTAX.SKBA_ENV_SRC

Index

A

acknowledgment settings 81—84
acknowledgment, system 148
Additional text 175
administering resources
  agreemet sets 8
  back-end definitions 10
  Business Programming Interfaces 9
  central administration 7
  help texts 10
  input scheduling 11
  local administration 7
  messages 10
  options 8
  output scheduling 11
  prompt 10
  responsibilities 7
  rule-based fanning 11
  scopes 9
  services 8
  source exits 11
  storing help text 10
  system administration 7
  system parameters 11
  Trading Partner registrations 11
  xml definition 11
Administration panel 165
Administration table group 70
Agreement Sets 18
Agreement Sets panel 18
AIX
  agent 73, 78
  program 73, 78
  system 78
ALE 106, 140
APPC 72, 76, 85, 115, 188
Application Help Texts 38
Application Installation 15
Application Link Enabling 106, 140
architecture 3
archiving 70
ASCA tables group 70
audit facilities 197—204
audit tables
  KBASCDAY 209
  KBASCPER 209
  KBDTAE 212
  KBDTAX 210
  KBDTDI 211
  reconciliation utility 209
authentication 3
autofail 195
autofail report 194

B

BATCH 72, 76, 86, 116
BEC applications 24
BEC Applications panel 24
BEC Destination Types panel 26
bibliography xv—xvi
BTB
  See Business Transaction Broker
business application 85, 102, 110, 113
Business Programming Interfaces 29
Business Programming Interfaces panel 30
Business Transaction Broker
  administion of resources 7
  administrator 53
  architecture 3
  audit facilities 197
  changes in the release xvii
  defining resources 15
  enhancements xvii
  errorlog 189
  fastpath commands 206
  functionality of MailRoom components 71
  getting started 205
  infrastructure 1
  MailRoom acknowledgment settings 81
  MailRoom on-line monitoring 165
  setting up destination scenarios 115—151
  setting up source scenarios 85—114
  signing on 205
  System errorlog 189
  terminology 57
  using panels 206

C

changes in this release xvii
CICS
  business application 103
  connection 115
  DCT 136
  EXEC CICS 73, 78
  listener 104, 105, 108
  MailRoom region 198
  MQ queue manager 134
  program 31
  region 134
  source scenario 71

© Copyright IBM Corp. 1992, 2002

CICS *(continued)*
SYSID 115
sysout 189
TD queue 31
temporary storage 68
terminal ID 169
transaction 17
transient data 31
TS queue 68
user ID 169
CICS TS
See CICS
CICS/ESA
See CICS
client/server design 5
codepage exit 155
continuous receive 98
continuous receives 182
CRLIST 182
CSP
application 10, 17
call 10

D

DataInterchange
ackowledgment levels 81
audit file 75
audit trail 209
calling audit logging module 198
control record 91, 93
de-enveloping 198, 199
DI to SAP exit 154
entities 89, 120
exit 200, 203
information record 91, 93, 209
logging 70
logging on 200
performance monitor user exit 209
repository 77
response program 94
SAP to DI exit 154
source exit 153
temporary file 89
Transactions Details 177
Transactions Image 178
translation 72, 74, 173
translation exit 155
DB2
audit tables 197
Common DB2 Resource Types - Help panel 192
QMF 197, 203
query module 27
reason codes 192
system erorr log 189
time-stamp 168, 173
DBCS 101, 107, 133
defining resources 15—51
derived envelopes 63, 166
destination envelopes 63
destination exit 69
destination scenarios
APPC 76, 115
BATCH 76, 116
DI-EDI 77, 119
EXP-DOC 77, 123
EXP-FILE 77, 126
FAX 77, 129
MAIL 77, 130
MQ 77, 132
NULL 78, 134
PGM-CICS 78, 135
SAP 78, 137
SAP-MQ 78, 139
setting up 115—151
TCPIP 78, 142
TIE-IMS 78, 144
TIE-MQ 79, 146
DI-EDI 77, 88, 119
DI-EDI source exit 153
display exit 69, 164
Display of Schedule panel 43
document exit 69
double-byte character set 107, 133
double-byte character sets 101

E

enhancements to BTB xvii
envelope ID 64
Envelope Status 165
Envelope, Details of 168
Envelope, Request in an 170
ENVST 165
Error Message table group 70
error messages 28
Error Messages and Event Messages 28
error notification 193
errorlog 189
event messages 28
Event, Additional text 175
Events, List of 174
exits 68, 200
codepage 155
DataInterchange 155
destination 69
DI to SAP 154
DI-EDI source 153
display 69, 164
document 69
EXP-FILE source 153
KBADXDP 154

exits *(continued)*
KBADXSP 154
KBAGXCP 155
KBAGXDP 155
KBAGXQP 157
KBAGXSP 158
KBAGXXP 159
KBAMRCP 160
KBASUMP 153
KBASXDP 153
KBASXFP 153
KBASXMP 153
KBASXSP 154
KBGXIDP 164
KBGXIRP 164
KBGXOTP 163
KBGXSXP 154
kernel 69
MailRoom-supplied 154
MailRoom-supplied source 153
Mercator 160
MQ Unpack 153
MQSI 157
OTMA 163
record length 164
Sample source 154
SAP source 154
SAP to DI 154
Source 34, 69
super 158
translation 155
unpack 68
XML 49, 159
XML source 153
EXP-DOC 72, 77, 123
EXP-FILE 73, 77, 126
EXP-FILE source exit 153
Expanded Envelope 167
expEDIte source exit 153
Expedite/CICS
audit scope 197
audit trail 209
calling audit logging module 198
completion code 211
continuous receive 99
enabling EXP-FILE scenario 127
EXPM 209
EXPP 209
information monitor user exit 209
Issue Continuous Receive panel 99
logging 70
Main Menu Selection panel 199
receive file 88, 95
response program 209
send file 119, 123, 126
sending functional acknowledgment 94
Expedite/CICS *(continued)*
splitting records 100
Export table group 70
extended logging 70
extended routing 66

F

fanning 66
fastpath commands 206
FAX 77, 129
functional acknowledgments 93

G

Group Command 180

H

help 15

I

idoc 71, 78, 104, 154
IE
See Information Exchange
IMB xiv
IMS
program 78
response program 74, 79
systems 76
TIE-READ 74
TIE-WRITE 74
transaction 72
Information Exchange 72, 73, 77, 197
information monitor user exit 209
infrastructure of BTB
architecture 3
authentication 3
client/server design 5
input scheduling 4
modularity 5
multiple access modes 4
navigation 4
network logging 4
network protocol conversion 4
network transparency 4
notification 4
NPT development environment 5
output scheduling 4
proactive monitoring 4
profiling 3
routing 4
security 3
services 3
summary 1

input scheduling 4, 41
Insert / Modify Scope 34
Insert new Working Criteria Entry panel 193
Intelligent Message Broker xiv
ISClink 111

J

JCL 197

K

KBAASCA 199
KBADXDP 154
KBADXSP 154
KBAGXCP 155
KBAGXDP 155
KBAGXQP 157
KBAGXSP 158
KBAGXXP 159
KBAMRCP 160
KBASCDAY 209
KBASCPER 209
KBASUMP 153
KBASXDP 153
KBASXFP 153
KBASXMP 153
KBASXSP 154
KBDTAE 212
KBDTAX 210
KBDTDI 211
KBGXIDP 164
KBGXIRP 164
KBGXOTP 163
KBGXSXP 154
kernel 65
kernel exit 69

L

layer 54
Link for R/3 73
List of Help Texts panel 39
List of Rule-based Fanning Rule Sets panel 44
List of Rule-based Fanning Rules panel 45
List of Schedules panel 42
List of Sundry Items panel 40
List of Value Sets in Rule Set panel 48
List of Values in Value Set panel 49
LTERM 111

M

M-record 60, 62, 67
MAIL 77, 130
MailRoom
  abbreviations 57
MailRoom *(continued)*
  acknowledgment settings 81—84
  archiving 70
  audit facilities 197—204
  autofail 195
  autofail report 194
  codepage conversion exit 155
  components 53, 54
  continuous receives 182
  databases 70
  derived envelopes 63
  destination envelopes 63
  destination exit 69
  destination scenarios 60, 76
  DI to SAP exit 154
  DI translation exit 155
  DI-EDI source exit 153
  display exit 69, 164
  document exit 69
  document formats 57
  envelope ID 64
  error notification 193
  event messages 28
  exits 68
  EXP-FILE source exit 153
  extended logging 70
  extended routing 61, 66
  fanning 66
  functionality of components 71—79
  group command 180
  KBADXDP 154
  KBADXSP 154
  KBAGXCP 155
  KBAGXDP 155
  KBAGXQP 157
  KBAGXSP 158
  KBAGXXP 159
  KBAMRCP 160
  KBASUMP 153
  KBASXDP 153
  KBASXFP 153
  KBASXMP 153
  KBASXSP 154
  KBGXIDP 164
  KBGXIRP 164
  KBGXOTP 163
  KBGXSXP 154
  kernel 65
  kernel exit 69
  layer 54
  M-record 60, 62, 67
  MailRoom Group Command for Source/Derived envelope 181
  MailRoom-supplied exits 154
  MailRoom-supplied source exits 153
  Mercator exit 160

MailRoom *(continued)*
MQ Unpack Exit 153
MQSI exit 157
on-line monitoring 165—195
OTMA exit 163
overview 54
priority level 66
requests 64
Sample source exit 154
SAP source exit 154
SAP to DI exit 154
scanner 195
Services 19, 60
setting up destination scenarios 115—151
setting up source scenarios 85—114
source envelopes 63
source exit 69
source scenarios 60, 71
status codes 185
super exit 158
terminology 57
Trading Partner receiver 61
Trading Partner sender 60
Trading Partner to Trading Partner 61
transmission queue 179
unpack exit 68
write API 105
XML exit 159
XML source exit 153
MailRoom Group Command for Source/Derived envelope 181
Mercator exit 160
messages 28
middleware 1
Modify Agreement Set panel 19
Modify BEC Applications panel 24
Modify BEC Destination Types panel 27
Modify Business Programming Interfaces panel 30
Modify MailRoom Send Subscription panel 41
Modify MailRoom Services panel 21
Modify Message panel 29
Modify Options panel 17
Modify Rule panel (DI rule) 48
Modify Rule panel (LE rule) 47
Modify Rule panel (SS rule) 46
Modify Rule panel (TP rule) 46
Modify Rule panel (VS rule) 47
Modify Schedule panel 43
Modify Source Exits panel 37
Modify Sundry Item Value panel 40
Modify XML Document definition panel 50
modularity 5
MQ 112
MQ Reply Queue (Ack) - Help panel 39
MQ Unpack Exit 153
MQSeries
acknowledgment 142
codepage 101, 107
DBCS 101, 133
definitions 101, 107
destination scenario 83, 133
destinations 132
KBDTAE 199
Link for R/3 73, 106
MailRoom format 73, 74
queue 101, 112, 133, 146
queue manager 73, 74, 77, 78, 79
queueid 102
receive subscription 66
remote queue manager 83, 133, 146
reply queue 133, 141
Reply Queue (Ack) - Help 39
SAP-MQ destinations 139
SAP-MQ source modules 199
SAP-MQ sources 106
source modules 199
source scenario 102
trigger 101, 106, 112
MQSI 157
multiple access modes 4

N

navigation 4
network logging 4
network protocol conversion 4
network transparency 4
notification 4
NPT development environment 5
NULL 78, 134

O

on-line monitoring 165—195
online help 15
Options 16
Options panel 16
OS/2
agent 78
MailRoom write API 109
OTMA exit 163
output scheduling 4, 42
overview 54

P

panels
Administration 165
Agreement Sets 18
BEC Applications 24
BEC Destination Types 26

panels *(continued)*
Business Programming Interfaces 30
Display of Schedule 43
Error Messages and Event Messages panel 28
Insert new Working Criteria Entry 193
List of Help Texts 39
List of Rule-based Fanning Rule Sets 44
List of Rule-based Fanning Rules 45
List of Schedules 42
List of Sundry Items 40
List of Value Sets in Rule Set 48
List of Values in Value Set 49
Modify Agreement Set 19
Modify BEC Application 24
Modify BEC Destination Types 27
Modify Business Programming Interfaces 30
Modify DI rule 48
Modify LE rule 47
Modify MailRoom Send Subscription 41
Modify MailRoom Services 21
Modify Message 29
Modify Schedule 43
Modify SS rule 46
Modify Sundry Item Value 40
Modify TP rule 46
Modify VS rule 47
Modify XML Document definition 50
MQ Reply Queue (Ack) - Help 39
Options 16, 17
Restriction Filter for Scopes 33, 34
Scopes 32
Services 20
Source exit 35
Source Exits 37
System Administration 15
System Errorlog 190
XML Document definition 50
performance monitor user exit 209
PGM 73, 102
PGM-CICS 78, 135
proactive monitoring 4
profiling 3

Q

QMF 4, 197, 203

R

R/3 73, 106
RACF 3, 12, 191
reconciliation utility 209
registration dependencies 89
Request 170
Request, Details of 171
Request, Event in 174
requests 64
resource definition 15—51
restart considerations 187
restart envelopes 186
Restriction filter for Scopes panel 33
Restriction Filters 33
routing 4
rule-based fanning 44

S

Sample source exit 154
SAP 78
acknowledgment setting 83
ALE 106, 140
Application Link Enabling 106, 140
DBCS 107
destination scenario 73
destinations 137
DI to SAP exit 154
directory 73
EDI port 104
enabling destination scenario 137
enabling SAP-MQ destination scenario 140
enabling source scenario 104
IDOC 71, 78, 140, 154
KBDTAE 199
Logical Msg code 138
MailRoom bridge 104
MailRoom write API 104
MQSeries SAP Link for R/3 73, 106
R/3 71, 73, 106
receiver 104
SAP to DI exit 154
SAP-MQ 83, 106, 107
source module 199
source scenario 71
sources 103
status record 104
trigger 78
via MQSeries 76
via TCP/IP 76
SAP source exit 154
SAP-MQ 139
scanner 195
Scope details 33
Scopes 31
Scopes panel 32
security 3
sending comments xvi
Service Point of Contact 41, 195
services 3, 19
Services panel 20
setting up destination scenarios 115—151

setting up source scenarios 85—114
SNA 85
source envelopes 63
source exit 69
Source Exit Panel 35
Source exits 34, 37
source scenarios
  APPC 72, 85
  BATCH 72
  DI-EDI 72, 88
  EXP-DOC 72, 95
  EXP-FILE 73, 96
  functional acknowledgments 93
  MQ 73, 101
  PGM 73, 102
  registration dependencies 89
  SAP 73, 103
  SAP-MQ 73, 106
  setting up 85—114
  TCPIP 74, 108
  TIE-IMS 74, 110
  TIE-MQ 74, 112
SPOC 41, 195
status codes 185
sundry prompt text 40
super exit 158
SYSACK 148
system acknowledgment 148
System Administration 15
System Administration panel 15
System errorlog 189
System Errorlog panel 190

T

TCP/IP
  address 104, 105, 109
  address space 105
  ASCII 139, 143
  client 71
  client connectivity 4
  codepage 25
  codepage conversion 139, 143
  CSKE transaction 105, 109
  daemon 137, 143
  destination scenario 78, 84, 143
  destinations 142
  EBCDIC 139, 143
  host machine 138
  listener 105, 109
  MailRoom write API 108, 109
  network 104, 108
  network transparency 4
  port 78, 105, 109
  receiver 108
  SAP source scenario 73, 78
TCP/IP *(continued)*
  source modules 199
  source scenario 74, 109
  sources 108
TCPIP 74, 78, 142
TD queue 31
temporary storage 68
terminology xiii
Text, Additional 175
TIE 110, 112, 113, 144, 146
TIE-IMS 74, 78, 144
TIE-MQ 79, 146
Transaction Server
  See CICS
Transactions Details 177
Transactions Image 178
transient data 31
translation exit 155
transmission queue 179
transport tables 70
transport tables group 70
TS queue 68

U

unpack exit 68

V

VSAM
  audit trail 197
  cleanup 198
  daily reconciliation 197
  extract program 201
  KBAASCA 199

W

WC table 185
WCEDIT 87, 111
Windows 85
Working Criteria table 185
  AUTOFAIL 195
  Insert new Working Criteria Entry panel 193
  ISERROR 193, 195
  online help 195
  WCEDIT 87, 111

X

XMITQ 179
XML 49, 153, 159
XML Document definition panel 50

IBM®

Printed in the United States of America
on recycled paper containing 10%
recovered post-consumer fiber.

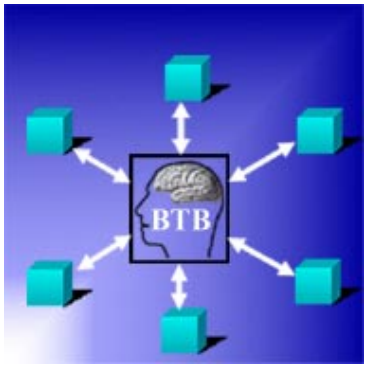

SC27-1582-01