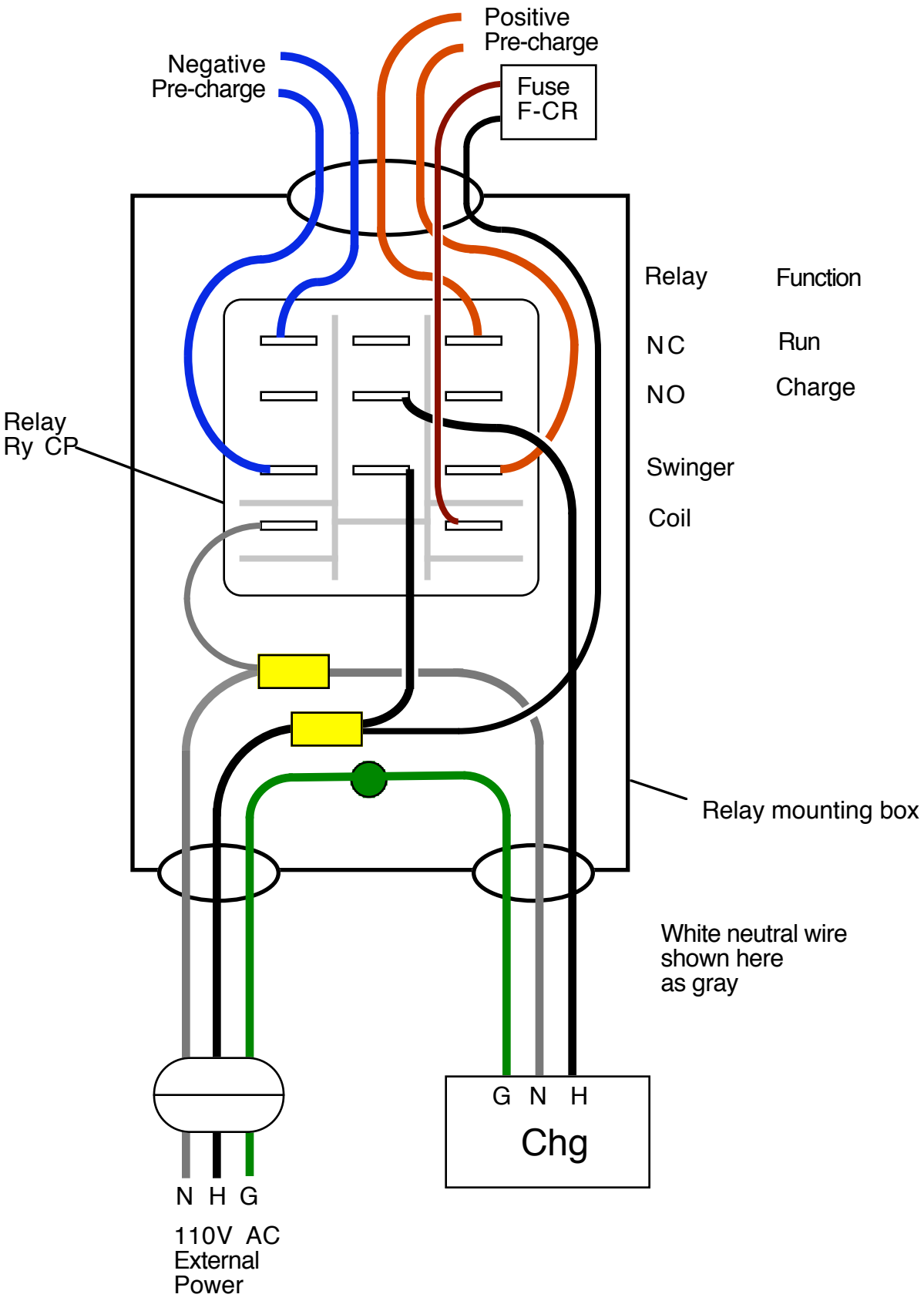

http://en.wikipidia.wiki/Image:WPEVConntactorChrgWires.png
View for current image and notes
Update November 13, 2005
Wikipedia License cc-sa